Registered No. C207

No. 1 of 1935

The Calcutta Gazette

Published by Authority

THURSDAY, JANUARY 3, 1935.

CONTENTS:

	Page.
Part I.—Orders and Notifications by the Governor of Bengal, the Government of Bengal, the High Court, Government Treasury, etc.	1—14
Part IA.—Orders and Notifications by the Government of India republished for general information	*Nil*
Part IB.—Educational Notices ..	1—41
Part II.—Advertisements	1—21
Part III.—Acts of the Bengal Legislative Council	*Nil*
Part IV.—Bills introduced in the Bengal Legislative Council, Reports of Select Committees presented or to be presented to that Council, and Bills published before introduction in that Council ..	*Nil*
Part V.—Acts of the Indian Legislature assented to by the Governor-General and Ordinances promulgated under section 72 of the Government of India Act ..	*Nil*
Part VI.—Bills introduced in the Council of State and Legislative Assembly, Reports of Select Committees presented to the Council and Assembly and Bills published under rule 18 of the Indian Legislative Rules	*Nil*
Supplement No. 1 :—	
Cotton Ginning and Pressing—Daily Rainfall—River water-levels ..	1—19
Abstract of audited accounts of the University of Dacca for the session 1933-34	20
Weekly Weather and Crop Report—Prices-current—Weekly gauge readings—Calcutta Improvement Trust Notification—Errata to Daily Rainfall ..	21—31

PART I

Orders and Notifications by the Governor of Bengal, the Government of Bengal, the High Court, Government Treasury, etc.

Orders by the Government of Bengal.

No. 15225A.

Appointments and Transfers.

General.

Notes.— No. 14754A.—22nd December 1934.—The orders of the 13th December 1934, posting Mr. Ananda Sankar Ray, I.C.S., Joint Magistrate and Deputy Collector, on leave, to the headquarters station of the Nadia district, are cancelled.

Dacca - 24-Parganas.—No. 14758A.—22nd December 1934.—Babu Satchidananda Mukharji, officiating Additional District and Sessions Judge, Dacca, is appointed to act, until further orders, as an Additional District and Sessions Judge, 24-Parganas.

Birbhum - Dacca. — No. 14763A.—22nd December 1934.—In supersession of the orders of the 4th December 1934, Babu Nalini Nath Das Gupta, Subordinate Judge and Assistant Sessions Judge, Birbhum, is appointed to act, until further orders, as an Additional District and Sessions Judge, Dacca.

Howrah - Darjeeling.—No. 14785A.—22nd December 1934.—Babu Binod Chandra Sen, Deputy Magistrate and Deputy Collector, Howrah, is transferred to the headquarters station of the Darjeeling district.

Darjeeling - Dacca. — No. 14789A.—22nd December 1934.—Babu Mani Mohan Ghosh, Deputy Magistrate and Deputy Collector, Darjeeling, is transferred to the headquarters station of the Dacca district.

Dacca - Tippera. — No. 14793A. — 22nd December 1934.—Maulvi Mustafizur Rahman Khan, Deputy Magistrate and Deputy Collector, Dacca, is transferred to the headquarters station of the Tippera district.

Chittagong.—No. 14797A.—22nd December 1934.—Khan Sahib Quazi Muhammad Mahiuddin, Deputy Magistrate and Deputy Collector, on leave, is posted to the headquarters station of the Chittagong district.

Chittagong.—No. 14801A.—22nd December 1934.—Babu Manindra Bhusan Datta, Deputy Magistrate and Deputy Collector, on leave, is posted to the headquarters station of the Chittagong district.

Nadia.—No. 14806A.—22nd December 1934. —Babu Gopendra Kumar Ghosh Chaudhuri, Deputy Magistrate and Deputy Collector, on leave, is posted to the headquarters station of the Nadia district.

Pabna. — No. 14810A. — 22nd December 1934.—Rai Binod Bihari Sarkar Bahadur, Deputy Magistrate and Deputy Collector, on leave, is posted to the headquarters station of the Pabna district.

Howrah. — No. 14816A.—22nd December 1934.—Maulvi A. K. Bazlul Karim, Deputy Magistrate and Deputy Collector, on leave, is posted to the headquarters station of the Howrah district.

Mymensingh.—No. 14825A.—22nd December 1934.—Babu Monoranjan Sarkar, Deputy Magistrate and Deputy Collector, Mymensingh, is transferred to the Tangail subdivision of that district.

Bogra - Dinajpur. — No. 14828A. — 22nd December 1934.—Babu Gaur Chandra Mandal, Deputy Magistrate and Deputy Collector, Bogra, is transferred to the headquarters station of the Dinajpur district.

Rajshahi - Chittagong.—No. 14831A.—22nd December 1934.—The orders of the 28th November 1934, transferring Babu Ananga Mohan Chakrabatti, Deputy Magistrate and Deputy Collector, Nator, Rajshahi, to the headquarters station of the Chittagong district are cancelled.

Rajshahi. — No. 14834A.—22nd December 1934.—The orders of the 28th November 1934, appointing Maulvi Muhammad Hafizur Rahman, Deputy Magistrate and Deputy Collector, Rajshahi, to have charge of the Nator subdivision of that district are cancelled.

Tippera - Midnapore. — No. 14836A.—22nd December 1934.—Babu Harendra Narayan Bose, Deputy Magistrate and Deputy Collector, on probation, Brahmanbaria, Tippera, is transferred to the headquarters station of the Midnapore district.

Tippera. — No. 14840A.—22nd December 1934.—Maulvi Salamatulla Chaudhuri, Sub-Deputy Collector, Tippera, is transferred to the Brahmanbaria subdivision of that district.

Nadia.—No. 14843A.—22nd December 1934. —Mr. Kali Charan Som, Deputy Magistrate and Deputy Collector, on leave, is posted to the headquarters station of the Nadia district.

Tippera. — No. 14847A.—22nd December 1934.—Maulvi Abdul Qadir, Deputy Magistrate and Deputy Collector, on probation, on leave, is posted to the headquarters station of the Tippera district.

POLICE.

Dacca - Noakhali. — No. 14768A. —22nd December 1934.—Captain G. W. Blake, Additional Superintendent of Police, Dacca, is posted as Additional Superintendent of Police of the Noakhali district.

This cancels notification No. 13322A., dated the 17th November 1934, posting him to the Mymensingh district.

No. 14780A.—22nd December 1934.—The probationary Assistant Superintendents of Police, named below, who have been selected by His Majesty's Secretary of State for India

in Council and allotted to Bengal are appointed by the Governor in Council to be Assistant District Superintendents of Police for the purpose of the Police Act, 1861 (Act V of 1861) and are posted to the Police Training College at Sardah, Rajshahi:—

Mr. J. E. Adams.
Mr. P. V. Wright.

Leave.

GENERAL.

24-Parganas.—No. 14702A.—20th December 1934.—Babu Sukesh Chandra Deb Ray, Deputy Magistrate and Deputy Collector, 24-Parganas, is allowed leave from the 2nd January to the 22nd December 1935, inclusive, viz., leave on average pay for four months, under rule 81 (*b*) (*ii*) of the Fundamental Rules, and leave on half average pay for the remaining period, under rule 81 (*d*) of those Rules.

Noakhali.—No. 14706A.—20th December 1934.—Maulvi Mahmud Ahmad, Deputy Magistrate and Deputy Collector, Feni, Noakhali, is allowed leave on average pay, under rule 81 (*b*) (*ii*) of the Fundamental Rules, from the 2nd January to the 5th January 1935, inclusive.

No. 14774A.—22nd December 1934.—Babu Mangal Kumar Acharji, Deputy Magistrate and Deputy Collector, is allowed leave on average pay for one month, under rule 81 (*b*) (*ii*) of the Fundamental Rules, in extension of the leave granted to him under the orders of the 18th October 1934.

Jessore. — No. 14776A. — 22nd December 1934.—Mr. Kuiada Charan Das Gupta, I.C.S., officiating District and Sessions Judge, Jessore, was allowed leave on average pay, under rule 81 (*b*) (*ii*) of the Fundamental Rules, from the 13th December to the 21st December 1934, inclusive.

POLICE.

Dinajpur.—No. 14752A.—22nd December 1934.—In modification of the orders of the 7th December 1934, Maulvi Saiyid Ali Ahmad, Deputy Superintendent of Police, Dinajpur, is allowed leave on average pay from the 11th December to the 22nd December 1934, under rule 81 (*b*) (*ii*) of the Fundamental Rules.

E. N. BLANDY,
Chief Secy. to the Govt. of Bengal (offg.).

Reforms.

RESOLUTION—No. 915A.R.

Calcutta, the 28th December 1934.

In their resolution No. 122A.R., dated the 16th January 1933, the Government of Bengal published a provisional list of Scheduled Castes which they proposed to adopt as the basis of their scheme for carrying out the proposals as first embodied in the Communal Decision for the representation of the Depressed Classes, and subsequently modified in accordance with the terms of the Poona Agreement. The list was prepared on the basis of the social and political backwardness of the castes, and the necessity of securing special representation for them in order to protect their interests.

2. Government invited public bodies, caste associations or individuals to submit their views regarding the inclusion or non-inclusion of any caste or castes in the list. Commissioners of Divisions and District Officers were also asked to examine the cases of all castes numerous in their divisions or districts, and to express their opinion whether, having regard to the criteria enunciated by Government, the castes should or should not be included in the list. They were also asked to state whether they were of opinion that any caste in their division or district which had not been included in the list should be so included.

3. In response to their invitation, Government received many representations from public bodies, caste associations and individuals. These, and the recommendations of Divisional Commissioners and District Officers have now been carefully considered, and Government

have decided to recommend for the consideration of His Majesty's Government the attached list of castes as suitable for inclusion in the list of Scheduled Castes for Bengal.

Order.—Ordered that the resolution be published in the *Calcutta Gazette* and forwarded to newspapers in Calcutta and mufassal for publication.

By order of the Governor in Council,

R. N. GILCHRIST,
Reforms Commissioner and Joint Secy. (ex-officio) to the Govt. of Bengal.

List of Scheduled Castes.

Agariya.	Hari.	Mallah.
Bagdi.	Ho.	Malpahariya.
Bahelia.	Jalia Kaibartta.	Mech.
Baiti.	Jhalo Malo or Malo.	Mehtor.
Bauri.	Kadar.	Muchi.
Bediya.	Kan.	Munda.
Beldar.	Kandh.	Musahar.
Berua.	Kandra.	Nagesia.
Bhatiya.	Kaora.	Namasudra.
Bhuimali.	Kapuria.	Nat.
Bhuiya.	Karenga.	Nuniya.
Bhumij.	Kastha.	Oraon.
Bind.	Kaur.	Paliya.
Binjhia.	Khaira.	Pan.
Chamar.	Khatik.	Pasi.
Dhenuar.	Koch.	Patni.
Dhoba.	Konai.	Pod.
Doai.	Konwar.	Rabha.
Dom.	Kora.	Rajbanshi.
Dosadh.	Kotal.	Rajwar.
Garo.	Lalbegi.	Santal.
Ghasi.	Lodha.	Sunri.
Gonrhi.	Lohar.	Sutradhar.
Hadi.	Mahar.	Tiyar.
Hajang.	Mahli.	Turi.
Halalkhor.	Mal.	

POLITICAL DEPARTMENT.

Political.

NOTIFICATION.

No. 15611P.—28th December 1934.—In exercise of the power conferred by sub-rule (*1*) of rule 16A of the Bengal Suppression of Terrorist Outrages Rules, 1934, published in the Government of Bengal, Political Department, notification No. 6177P., dated the 14th June 1934, the Governor in Council is pleased to declare that the district of Noakhali shall be an emergency area for the purposes specified in the said sub-rule.

E. N. BLANDY,
Chief Secy. to the Govt. of Bengal (offg.).

POLICE DEPARTMENT.

NOTIFICATIONS.

Pabna.—No. 7013Pl.—17th December 1934.—In exercise of the power conferred by section 4 (*l*) (*s*) of the Code of Criminal Procedure, 1898 (Act V of 1898), and in modification of all previous notifications published in the *Calcutta Gazette*, the Governor in Council is pleased to declare that the villages specified in the following schedule, which are not at present included in any police-station, shall be included in the Pabna police-station in the district of Pabna:—

Schedule.

Villages.	New jurisdiction list number of thana Pabna.
1. Char Ghosepur ...	238/27
2. Khas Char Bagunda ...	239/25
3. Char Ashutosh ...	240/11

No. 7160Pl.—21st December 1934.—The following draft of an amendment, which, in exercise of the power conferred by section 101 of the Bengal Village Self-Government [illegible] 1919 (Bengal Act V of 1919), the Governor in Council proposes to make in the rules published under notification No. 2197P.J., dated the 21st May 1920, is hereby published [illegible] information of persons likely to be affected thereby.

2. The draft will be taken into consideration on or after the 1st February 1935 and any objection or suggestion received by the undersigned with regard thereto before that date will be duly considered:—

Draft amendment.

1. *Add* the following to rule 25 in part IV of the said rules:—

"Dafadars and chaukidars shall sign or put their thumb impression in this form in the proper column."

2. *Substitute* the following for form C:—

Form C.

(*Vide* Rules 18, 25, 26 and 27.)

Register of payment of dafadars and chaukidars for the month/quarter of 13 B.S.

Name and beat number of chaukidar or dafadar.	Rate of pay per month.	Period for which pay is due.	Fines imposed.	Net amount paid as salary.	Amount paid for process-serving.	Initial of presiding member and date of payment.	Signature or thumb impression of dafadars and chaukidars.	Remarks.

Note.—In the case of payments to officiating dafadars or chaukidars, necessary entries shall also be made in this register, the acting arrangements being shown in such cases against the names in the "Remarks" column.

E. N. BLANDY,

Chief Secy. to the Govt. of Bengal (offg.).

Orders by the Inspector-General of Police, Bengal.

Calcutta.—No. 12966A.—19th December 1934. — **Chittagong - Howrah - Hooghly-Darjeeling.**—In partial modification of the orders published under notification No. 12468, dated the 5th December 1934, in the *Calcutta Gazette*, dated the 13th December 1934, the following postings are ordered in the interests of public service:—

(*i*) Mr. B. Harris, probationary Town Inspector, Chittagong (on leave), to Howrah.

(*ii*) Mr. F. H. Brown, Town Inspector, Howrah, to Serampore, Hooghly.

(*iii*) Mr. B. P. Albert, Town Inspector, Serampore (Hooghly), to Darjeeling.

(*iv*) Mr. E. Smith, Town Inspector, Darjeeling, to Chittagong.

Nadia.—No. 13024A. — 19th December 1934.—Babu Shashi Kumar Ray Chaudhuri, probationary Court Inspector, Nadia, is confirmed in his appointment, with effect from the 19th November 1934.

Bakarganj-Faridpur.—No. 13019A. — 19th December 1934.—On the abolition of the River Police, Narayanganj, the following Inspectors of the River Police are absorbed in the permanent vacancies noted against each—

(1) Khan Sahib Bazlur Rahman—*vice* Babu Girish Chandra Das, Inspector, Bakarganj, retired. He is posted to Bakarganj.

(2) Maulvi Muhammad Sultan—*vice* Babu Pramod Bihari Sen, Inspector, Tippera, retired. He is transferred to Faridpur, *vice* Rai Sahib Prabodh Chandra Mazumdar, Inspector (officiating Deputy Superintendent, Intelligence Branch), posted, on paper, to Tippera.

The transfers involved in the above orders are sanctioned in the interests of public service.

T. J. A. CRAIG,

Inspector-General of Police, Bengal.

JUDICIAL DEPARTMENT.

Leave.

Noakhali. — No. 9702J. — 21st December 1934.—Babu Hem Chandra Sanyal, Subordinate Judge and Assistant Sessions Judge of Noakhali, is allowed privilege leave on full pay for two months from the 2nd January 1935, under the amendment to articles 271 and 272 of the Civil Service Regulations.

Tippera.—No. 9719J.—21st December 1934. —Babu Makhan Lal Mukharji, officiating Subordinate Judge of Tippera, is allowed leave on average pay for eight days and on half average pay for two days from the 13th December 1934, under Fundamental Rules 81 (*b*) (*ii*) and 82 (*b*), and Fundamental Rule 81 (*d*), respectively.

Confirmation.

Calcutta. — No. 9674J. — 20th December 1934.—Mr. Amin Ahmad, Bar.-at-Law, officiating Judge, Court of Small Causes, Calcutta, is confirmed in his present appointment with effect from the 10th January 1935, *vice* Mr. Satish Chandra Mitter, Bar.-at-Law, Judge of the same Court, retired.

NOTIFICATIONS.

Pabna.—No. 9637J.—19th December 1934. —In exercise of the power conferred by subsection (*1*) of section 13 of the Bengal, Agra and Assam Civil Courts Act, 1887 (XII of 1887), the Governor in Council is pleased to

declare that the villages in the following Schedule, which are not at present included in any munsifi, shall be included within the Sadar munsifi in the district of Pabna:—

Schedule.

Villages.	New jurisdiction list number of thana Pabna.
Char Ghosepur ...	238/27
Khas Char Bagunda ...	239/25
Char Ashutosh ...	240/117

Burdwan.—No. 9723J. — 22nd December 1934.—In exercise of the power conferred by section 65 of the Bengal Village Self-Government Act, 1919 (Bengal Act V of 1919), the Governor in Council is pleased to appoint the following members of the Barabainan union board within the Raina police-station in the Sadar subdivision of the Burdwan district, to be, during their term of office as such members, a union bench within the jurisdiction of the said union board for the purposes of that section:—

Maulvi Chaudhuri Abdul Based.
Babu Sarbananda Koly.
Babu Jatindra Nath Pathak.
Babu Gobinda Chandra Pal.

Burdwan.—No. 9724J. — 22nd December 1934.—In exercise of the power conferred by section 73 of the Bengal Village Self-Government Act, 1919 (Bengal Act V of 1919), the Governor in Council is pleased to appoint the following members of the Barabainan union board within the Raina police-station in the Sadar subdivision of the Burdwan district, to be, during their term of office as such members, a union court within the jurisdiction of the said union board for the purposes of that section:—

Maulvi Chaudhuri Abdul Based.
Babu Sarbananda Koly.
Babu Jatindra Nath Pathak.
Babu Gobinda Chandra Pal.

N. G. A. EDGLEY,
Secy. to the Govt. of Bengal.

LOCAL SELF-GOVERNMENT DEPARTMENT.

NOTIFICATION.

Minister-in-charge: The Hon'ble Sir Bijoy Prasad Singh Roy, Kt.

No. 5953M.—22nd December 1934.—In exercise of the power conferred by sub-section (2) of section 235 of the Bengal Municipal Act, 1932 (Bengal Act XV of 1932), the Government of Bengal (Ministry of Local Self-Government) are pleased to make the following rules:—

Rules prescribing conditions subject to which the Commissioners of a municipality may sanction projections over public streets.

1. Where the street is less than 20 feet in width, no verandah, balcony, sunshade, weather-frame or the like shall be erected on any building so as to project over the street.

2. Where the street is 20 feet or more in width, no such projection shall be erected which—

(*a*) is less than 12 feet above the surface of the street; or

(*b*) if there is a footpath, extends beyond such footpath; or

(*c*) if there is no footpath, extends more than 3 feet horizontally beyond the line of the plinth or basement wall of the building.

Medical.

Minister-in-charge: The Hon'ble Sir Bijoy Prasad Singh Roy, Kt.

Tippera.—No. 4031Medl.—21st December 1934.—Dr. Indra Bhusan Mazumdar of the Sadar Hospital, Comilla, was granted leave on average pay for the period from the 9th October 1934 to the 14th November 1934 (both days inclusive), under rule 81 (*b*) (*ii*) of the Fundamental Rules.

This cancels notification No. 637T.Medl., dated the 11th October 1934.

Chittagong.—No. 4038Medl.—22nd December 1934.—Lt.-Col. P. Banerji, I.M.S., Civil Surgeon, Chittagong, is granted leave on average pay for thirteen days, under rule 81 (*b*) (*ii*) of the Fundamental Rules, with effect from the 2nd January 1935.

Chittagong.—No. 4039Medl.—22nd December 1934.—Dr. Keshab Chandra Sen Gupta, Teacher of Surgery and Midwifery, Chittagong Medical School, is appointed, to act, until further orders, as Civil Surgeon, Chittagong, in addition to his own duties and without any extra remuneration, during the absence, on leave, of Lt.-Col. P. Banerji, I.M.S.

Dinajpur.—No. 4044Medl.—22nd December 1934.—Dr. Narendra Nath Chaudhury, Civil Surgeon, Dinajpur, is allowed leave on average pay for the period from the 1st January to the 9th January 1935 (both days inclusive), under rule 81 (*b*) (*ii*) of the Fundamental Rules.

Rangpur - Jessore.—No. 4045Medl.—22nd December 1934.—Dr. Surendra Nath Sen Gupta, Civil Surgeon, Rangpur, on the expiry of his leave, is posted to Jessore as Civil Surgeon, *vice* Dr. Madhu Sudan Mukherji.

Jessore - Birbhum.—No. 4046Medl.—22nd December 1934.—Dr. Madhu Sudan Mukherji, Civil Surgeon, Jessore, is, on relief, posted to Suri, Birbhum, as Civil Surgeon, *vice* Dr. Aghore Nath Ghosh.

Birbhum - Dinajpur. — No. 4047Medl.—22nd December 1934.—Dr. Aghore Nath Ghosh, Civil Surgeon, Birbhum, is, on relief, posted to Dinajpur as Civil Surgeon, *vice* Dr. Narendra Nath Chaudhury, granted leave preparatory to retirement.

Chittagong Hill Tracts.—No. 4050Medl.—22nd December 1934.—Dr. Narendra Nath Ghosh, officiating Civil Surgeon, Chittagong Hill Tracts, is allowed leave on average pay for three months, under rule 81 (*b*) (*ii*) of the Fundamental Rules, with effect from the 5th November 1934.

This cancels this department notification No. 3948Medl., dated the 15th December 1934.

Calcutta.—No. 4056 Medl.—24th December 1934.—Dr. Nilratan Banerji, a Demonstrator of Anatomy, Medical College, Calcutta, is allowed leave on average pay for four months, on medical certificate, under the proviso to Fundamental Rule 81(*b*)(*ii*), in extension of the leave already granted to him in this department notification No. 2805 Medl., dated the 7th September 1934.

NOTIFICATION.

No. 4059 Medl.—24th December 1934.—In pursuance of section 7 of the Bengal Medical Act, 1914 (Bengal Act VI of 1914), as amended by Bengal Act III of 1928, it is hereby notified for general information that Dr. Bidhan Chandra Roy, M.D., M.R.C.P., F.R.C.S. (Eng.), has been duly elected under clause (*d*) of section 4 of the said Act to be a member of the Bengal Council of Medical Registration, *vice* Dr. Mrigendra Lal Mitra, deceased.

G. S. DUTT,
Secy. to the Govt. of Bengal.

Public Health.

NOTIFICATIONS.

No. 2873P.H.—22nd December 1934.—For the purposes of the Paris Sanitary Convention, 1926, and with reference to rule 1 (*5*) of the rules framed under section 6, sub-section (*1*), clause (*p*) of the Indian Ports Act, 1908 (Act XV of 1908), as amended by the Indian Ports (Amendment) Act, 1911 (IV of 1911), and published in Marine Department notification No. 16Mne., dated the 6th March 1917, the Governor in Council is pleased to declare Vizagapatam to be infected port on account of small-pox.

No. 2913P.H.—22nd December 1934.—For the purposes of the Paris Sanitary Convention, 1926, and with reference to rule 1 (*5*) of the rules framed under section 6, sub-section (*1*), clause (*p*) of the Indian Ports Act, 1908 (Act XV of 1908), as amended by the Indian Ports (Amendment) Act, 1911 (IV of 1911), and published in Marine Department notification No. 16Mne., dated the 6th March 1917, the Governor in Council is pleased to declare Cuddalore to be infected port on account of cholera.

Minister-in-charge: The Hon'ble Sir Bijoy Prasad Singh Roy, Kt.

Dacca Circle.—No. 2861P.H.—20th December 1934.—Captain J. D. Sinha, M.R.C.P.E., L.R.C.S. (Edin.), L.R.F.P. & S. (Glas.), D.P.H. (Cal.), D.T.M. & H. (Edin.), L.M. (Dub.), is appointed as Assistant Director of Public Health, Bengal, on probation for two years with effect from the 2nd January 1935 and is placed in charge of the Dacca Circle.

Dacca-Presy. Circle.—No. 2862P.H.—20th December 1934.—Dr. B. C. Mukherji, M.B., D.P.H., Assistant Director of Public Health, Dacca Circle, is transferred on relief to the Presidency Circle.

No. 2955P.H.—22nd December 1934.—Dr. Rajendra Chandra Ray, L.M.S. (Cal.), D.P.H. (London), Assistant Director of Public Health, Bengal, is allowed leave on average pay for two months, under Fundamental Rule 86 (*b*), with effect from the 23rd December 1934.

H. R. WILKINSON,
Secy. to the Govt. of Bengal.

EDUCATION DEPARTMENT.

NOTIFICATION.

Minister-in-charge: The Hon'ble Khan Bahadur M. Azizul Haque.

Howrah.—No. 3394Edn.—21st December 1934.—Dr. Sudhir Ranjan Sen Gupta is appointed to act in the Bengal Educational Service as a Lecturer in Civil Engineering in the Bengal Engineering College, with effect from the date on which he joins the appointment.

This supersedes notification No. 1673Edn., dated the 5th July 1934.

Registration.

NOTIFICATIONS.

Minister-in-charge: The Hon'ble Khan Bahadur M. Azizul Haque.

Dacca. — No. 791Regn. — 24th December 1934.—In exercise of the power conferred by section 3 of the Bengal Muhammadan Marriages and Divorces Registration Act, 1876 (Bengal Act I of 1876), the Government of Bengal (Ministry of Education) are pleased to appoint Khan Saheb Chaudhuri Fariduddin Ahmed Siddiqui to be a Muhammadan Registrar within the police-stations of Kotwali, Lalbagh, Sutrapur and Keraniganj, in the district of Dacca.

Dacca. — No. 792Regn. — 24th December 1934.—In exercise of the power conferred by section 2 of the Kazis' Act, 1880 (Act XII of 1880), the Government of Bengal (Ministry of Education) are pleased to appoint Khan Saheb Chaudhuri Fariduddin Ahmed Siddiqui to be the Kazi for the celebration of marriages and the performance of other rites and ceremonies within the police-stations of Kotwali, Lalbagh, Sutrapur and Keraniganj, in the district of Dacca.

H. R. WILKINSON,

Secy. to the Govt. of Bengal.

Orders by the Inspector-General of Registration, Bengal.

Pabna.—No. 641.—20th December 1934.—Babu Suresh Chandra Chakrabatti, Sub-Registrar of Sujanagar, in the district of Pabna, is allowed leave on average pay for seven days, under rule 81 (*b*) (*ii*) of the Fundamental Rules, with effect from the 2nd January 1935.

Mymensingh.—No. 642.—20th December 1934.—Maulvi Ghulam Maksud Khan, Sub-Registrar of Madan, in the district of Mymensingh, is allowed leave on average pay for four days, under rule 81 (*b*) (*ii*) of the Fundamental Rules, with effect from the 2nd January 1935.

Birbhum. — No. 643.—20th December 1934.—Babu Kashi Nath Hazra, Sub-Registrar attached to Suri, Birbhum, is appointed temporarily to be the Sub-Registrar of Bolpur in the same district, with effect from the 16th January 1935, or any subsequent date on which he assumes charge of the office, *vice* Babu Lalit Mohan Chatarji, about to retire.

Bakarganj. — No. 644. — 21st December 1934.—This department notification No. 595, dated the 5th December 1934, granting leave on average pay for one day on the 17th November 1934 to Babu Charu Kahta Sen, Sub-Registrar of Bhandaria, in the district of Bakarganj, is cancelled.

Chittagong. — No. 645. — 21st December 1934.—Babu Hemendu Bikash Ray, Sub-Registrar of Raozan, in the district of Chittagong, is allowed leave on average pay for one day on the 5th November 1934, under rule 81 (*b*) (*ii*) of the Fundamental Rules.

Chittagong. — No. 646. — 21st December 1934.—Maulvi Shams-ur-Rahman, Joint Sub-Registrar of Hathazari at Fatheyabad, in the district of Chittagong, is appointed to be Joint Sub-Registrar of Raojan at Ranganiya in the same district.

Chittagong. — No. 647. — 21st December 1934.—Maulvi Ayub Ali Chaudhuri, Joint Sub-Registrar of Raojan at Ranganiya, in the district of Chittagong, is appointed to be Joint Sub-Registrar of Hathazari at Fatheyabad in the same district.

Mymensingh. — No. 648.—22nd December 1934.—Maulvi Abul Hasain, No. I, Sub-Registrar of Sarisabari, in the district of Mymensingh, is allowed leave on average pay for one month and ten days, under rule 81 (*b*) (*ii*) of the Fundamental Rules, in extension of leave granted to him in this department notification No. 601, dated the 11th December 1934.

Mymensingh - Bogra. — No. 649.—22nd December 1934.—Babu Radha Ballav Banik, Sub-Registrar of Kalihati, in the district of Mymensingh, under orders of transfer to Khetlal, in the district of Bogra, is allowed leave on average pay for one month and eighteen days, under rule 81 (*b*) (*ii*) of the Fundamental Rules, with effect from the 5th November 1934.

Mymensingh. — No. 650.—22nd December 1934.—Maulvi Gazanfar Ali Khan Eusafjai, Sub-Registrar attached to Mymensingh, acted as Sub-Registrar of Kalihati in the same district from the 5th November 1934 to the 4th December 1934, inclusive.

Dacca.—No. 651.—22nd December 1934.—Babu Ratish Chandra Ray, Sub-Registrar of Barangail, in the district of Dacca, is allowed leave on average pay for one month, under rule 81 (*b*) (*ii*) of the Fundamental Rules, in extension of the leave granted to him in this department notification No. 500, dated the 10th October 1934.

24-Parganas. — No. 652.—22nd December 1934.—This department notification No. 185, dated the 4th December 1934, granting leave on average pay for two days on the 5th and 6th December 1934 to Babu Naresh Chandra Mitra, Sub-Registrar of Dakshin Baraset, in the district of the 24-Parganas, is cancelled.

S. AHMED,
Inspector-General of Regn., Bengal.

FINANCE DEPARTMENT.

Audit.

ADDENDUM AND CORRIGENDUM.

No. 8448F.—22nd December 1934.—The following correction, which has been authorised, is published for general information:—

Fundamental and Subsidiary Rules, 1st Edition (Reprint), 1929.

Page 48—S. R. 56.—Insert the following as Note 2 under this rule, the existing note being numbered (1):—

Note 2.—The term "pay" occurring in S. R. 56 should be held to include, as far as civil officers are concerned, all the emoluments drawn under Fundamental Rules 9 (*21*) (*a*) (*i*), (*ii*) and (*iii*), sterling overseas pay being converted for the purpose at 1*s.* 6*d.* to the rupee.

D. GLADDING,
Secy. to the Govt. of Bengal.

COMMERCE DEPARTMENT.

NOTIFICATION.

No. 8709Com.—24th December 1934.—Mr. M. Moore, Inspector of Boilers, Bengal, on the expiry of his leave out of India, is posted to the head office at Calcutta with effect from the 17th December 1934.

D. GLADDING,
Secy. to the Govt. of Bengal.

DEPARTMENT OF AGRICULTURE AND INDUSTRIES.

Agriculture.

NOTIFICATION.

Minister-in-charge: The Hon'ble Nawab K. G. M. Faroqui, Khan Bahadur.

No. 6458Agri.—21st December 1934.—Babu Jagadish Chandra Basu, Head Assistant of the office of the Director of Agriculture, Bengal, is appointed to act as Personal Assistant to the Director of Agriculture, Bengal, during the absence, on leave, of Maulvi Shaikh Abdullah, or until further orders.

Co-operative Societies.

NOTIFICATION.

Minister-in-charge: The Hon'ble Nawab K. G. M. Faroqui, Khan Bahadur.

Pabna.—No. 6315Co-op.—19th December 1934.—Babu Bimala Kanta Lahiri, Sub-Deputy Collector and Manager of the Co-operative Land Mortgage Bank at Pabna, is allowed leave on average pay for the period from the 2nd January 1935 to the 15th January 1935 (both days inclusive), under rule 81 (*b*) (*ii*) of the Fundamental Rules.

J. D. V. HODGE,
Secy. to the Govt. of Bengal.

Forests.

Orders by the Conservator of Forests, Bengal.

Kurseong.—No. 14068For.—21st December 1934.—Babu Suresh Chandra Basu, Extra Assistant Conservator of Forests, attached to the Kurseong Division, is appointed Instructor, Bengal Forest School, with headquarters at Dow Hill, with effect from the afternoon of the 1st December 1934.

Kurseong.—No. 14071For.—21st December 1934.—Babu Rameswar Banarji, Extra Assistant Conservator of Forests, is granted leave on average pay for twenty days, under rule 81 (*b*) (*ii*) of the Fundamental and Subsidiary Rules, with effect from the 3rd December 1934, with permission to prefix Sunday, the 2nd December 1934, and affix Sunday, the 23rd December 1934, and the Christmas and the New Year's Day holidays to the leave.

E. O. SHEBBEARE,
Conservator of Forests, Bengal.

REVENUE DEPARTMENT.

Jurisdiction.

NOTIFICATION.

Pabna.—No. 1400T.R.—4th October 1934.—In exercise of the power conferred by sub-section (*1*) of section 8 of the Code of Criminal Procedure, 1898 (Act V of 1898), and in supersession of all previous notifications relating to the area included within the Sadar subdivision of the Pabna district, and to the boundaries of that area, the Governor in Council is pleased to declare that the limits of that subdivision shall include the local areas of the following police-stations:—

Pabna police-station—Notifications, dated the 14th January 1875, 10th July 1888, No. 3385P.J., dated the 3rd December 1918, No. 5911Pl., dated the 30th November 1927, Nos. 4746Pl. and 4747Pl., dated the 13th November 1929, and No. 7013Pl., dated the 17th December 1934.

Atgharia police-station — Notification No. 5913Pl., dated the 30th November 1927.

Sara police-station—Notification, dated the 10th July 1888, published at pages 633-35 of the *Calcutta Gazette*, dated the 11th July 1888, No. 4746Pl., dated the 13th November 1929, and No. 2643Pl., dated the 5th May 1934.

Chatmohar police-station — Notification No. 180Pl., dated the 10th January 1929.

Sujanagar police-station — Notifications No. 5914Pl., dated the 30th November 1927, No. 33Pl., dated the 4th January 1928, No. 3064Pl., dated the 11th June 1928, and No. 2642Pl., dated the 5th May 1934.

Santhia police-station—Notifications, dated the 14th January 1875, and No. 3768P., dated the 24th April 1913.

Faridpur police-station — Notifications No. 3767P., dated the 24th April 1913, and No. 3820Pl., dated the 16th July 1927.

Bera police-station—Notifications No. 5915-Pl., dated the 30th November 1927, No. 34Pl., dated the 4th January 1928, No. 5903Pl., dated the 15th December 1928, No. 916Pl., dated the 18th February 1929, and No. 2412-Pl., dated the 11th May 1933.

O. M. MARTIN,
Secy. to the Govt. of Bengal.

Excise.

Orders by the Commissioner of Excise and Salt, Bengal.

No. 49Exc.—21st December 1934.—Syed Ahmad Rasul, Inspector of Excise and Salt, Calcutta, was allowed leave on average pay for twenty-six days, with effect from 7th May 1934, under the proviso to rule 81 (*b*) (*ii*) of the Fundamental Rules, in extension of the leave already granted to him.

This office notification No. 23Exc., dated 16th July 1934, is cancelled.

S. K. HALDAR,
Commr. of Excise and Salt, Bengal.

TREASURY NOTICE.

Jessore, the 15th December 1934.

Uncovenanted Deputy Collector Babu Girish Chandra Das has been placed in executive charge of the Jessore Treasury with effect from the afternoon of the 14th December 1934 and is authorised to draw bills on other treasuries.

N. K. SEN, *Collector.*

HIGH COURT NOTICES.

English Department—Civil.

The 20th December 1934.

Issued by the authority of the High Court of Judicature at Fort William in Bengal.

RULE No. 7 OF 1934.

(Criminal.)

Cancel Rule III (slip), Chapter I, page 39, of the Court's General Rules and Circular Orders, Criminal, Volume I, and its heading and *substitute* therefor the following:—

"References under Sections 307 and 374 of the Code of Criminal Procedure and the Bengal Criminal Law Amendment Acts.

111. In all references under section 374, Criminal Procedure Code, and under section 3 (*2*) of the Bengal Criminal Law Amendment (Supplementary) Act, 1925, and in references under section 307 in which the accused is charged with murder the Sessions Judge or the District Magistrate, as the case may be, shall forward with the record of the case—

(*a*) all Police Diaries, and

(*b*) articles connected with the offence which have been proved and exhibited but which cannot be attached to the record, *e.g.*, weapons, counterfeit coins, *vide* Rule 3, clause (7), Chapter III, page 72, of the Court's General Rules and Circular Orders, Criminal (Volume I), if he thinks that they would be useful to the High Court or such of the articles as the Crown or the accused may desire to have forwarded.

In other cases articles mentioned in clause (*b*) above should not be sent unless desired by the Crown or the accused or specially called for by the High Court."

By order of the High Court,
N. L. HINDLEY, *Registrar.*

High Court, Crown Office, the 11th day of December 1934.

Dates of the Criminal Sessions for the year 1935.

Number of Sessions.	Day of the week.	Date.
First Sessions ..	Monday ..	18th February.
Second Sessions	Wednesday	8th May.
Third Sessions ..	Monday ..	17th June.
Fourth Sessions	Monday ..	29th July.
Fifth Sessions ..	Monday ..	25th November.

By order,
O. MOSES,
Clerk of the Crown.

ORDERS BY COMMISSIONERS OF DIVISIONS.

Burdwan Division—Chinsura.

No. 5347J.G.—21st December 1934.—In accordance with the provisions of rule 63 (*2*) of Chapter IV of the Bengal Jail Code, I hereby appoint the following gentlemen to be non-official visitors of the Hooghly District Jail for a period of two years with effect from the date noted against each:—

Dr. S. A. H. Jafri, PH.D.—28th February 1935.

Mr. Rajendra Lal Sadhu, M.A., B.L.—2nd January 1935.

L. B. BURROWS, *Commissioner (offg.)*.

No. 5394J.G.—22nd December 1934.—It is hereby notified that Babu Amar Nath Dutt, one of the nominated candidates for election from the Burdwan Division Non-Muhammadan Rural Constituency of the Indian Legislative Assembly, has filed on the 22nd December 1934 his return of election expenses and the declaration in respect thereof, as required by rule 19, clauses (*1*) and (*3*), respectively, of the Legislative Assembly Electoral Rules. They can be inspected in the office of the Commissioner of the Burdwan Division, Chinsura, on payment of a fee of one rupee between the hours of 11 a.m. and 3 p.m. for one week from the date of publication of this notification in the gazette or from the 2nd January 1935, whichever is later.

L. B. BURROWS, *Returning Officer,*
Burdwan Division Non-Muhammadan Rural Constituency of the Indian Legislative Assembly.

Burdwan, the 18th December 1934.

It is hereby notified for general information that, under section 13 of the Bengal Village Self-Government Act, 1919 (Bengal Act V of 1919), read with rule 36 of the rules for the election and appointment of members of union boards, etc., Munshi Ali Ahmad has been appointed by the District Magistrate of Burdwan to be a member of the Narugram union board in police-station Raina in the Sadar subdivision of Burdwan, *vice* Munshi Sadek Ali, deceased.

It is hereby notified for general information that, under section 13 of the Bengal Village Self-Government Act, 1919 (Bengal Act V of 1919), read with rule 36 of the rules for the election and appointment of members of union boards, etc., Babu Jatindra Nath Dutta has been appointed by the District Magistrate of Burdwan to be a member of the Narugram union board in police-station Raina in the Sadar subdivision of Burdwan, *vice* Babu Prabhat Ranjan Dutta, resigned.

It is hereby notified for general information that, under section 13 of the Bengal Village Self-Government Act, 1919 (Bengal Act V of 1919), read with rule 35 of the rules for the election and appointment of members of union boards, etc., Babu Anukul Chandra Banerji has been duly elected to be a member of Ward No. II of the Kandra union board in police-station Ketugram in the Katwa subdivision of Burdwan, *vice* Babu Umakinkar Paramanik, deceased.

Burdwan, the 20th December 1934.

Erratum.—In notification, dated 3rd March 1933, published at page 387, Part I of the *Calcutta Gazette*, dated 9th March 1933, *re* election of Babu Bishnupada Haldar, *read* "Khano" *for* the word "Lowa" in line 8 and also in line 10 *read* "Babu Radhapada Haldar" *for* the words "Babu Bindu Bihari Majumdar."

M. M. STUART, *District Magistrate.*

Chittagong Division—Chittagong.

No. 6193G.—18th December 1934.—Babu Sailendra Nath Das Gupta, Sub-Deputy Collector, Chittagong, is allowed leave on average pay from the 20th to the 22nd December 1934, both the days inclusive, under rule 81 (*b*) (*ii*) of the Fundamental Rules.

No. 6198G.—18th December 1934.—Maulvi Atawar Rahman, Sub-Deputy Collector, Brahmanbaria, Tippera, is allowed leave on average pay for two weeks, under rule 81 (*b*) (*ii*) of the Fundamental Rules, with effect from the 2nd January 1935.

No. 6363G.—20th December 1934.—Maulvi Abul Khair, Sub-Deputy Collector, who has been posted to this division in Government notification No. 14082A., dated the 8th December 1934, is posted to the headquarters station of the Tippera district as Circle Officer.

No. 6429G.—22nd December 1934.—It is hereby notified for general information that, under clause (*b*) of rule 20 of the rules for the management of hospitals and dispensaries in Bengal, the following gentlemen have been appointed to be members of the managing committee of the Elgin Hospital at Chandpur in the district of Tippera:—

The Subdivisional Officer, Chandpur (*ex-officio*).
The Medical Officer, Elgin Hospital (*ex-officio*).
Dr. Nirmal Chandra Ghosh, medical practitioner.
Babu Nagendra Nath Roy, Pleader.
Maulvi Md. Serajul Islam, Vice-Chairman, Chandpur Municipality.
Maulvi Abdus Sattar, Pleader.
Maulvi Habibulla, Pleader.
Dr. Mahendra Chandra Karmaker, medical practitioner.
Babu Akshoy Kumar Dey Sarkar, muktear.
Babu Kula Chandra Bose, muktear.
Babu Loke Nath Roy, merchant and zemindar.

No. 6432G.—22nd December 1934.—It is hereby notified for general information that, under clause (*b*) of rule 20 of the rules for the management of hospitals and dispensaries in Bengal, the following gentlemen have been appointed to be members of the managing committee of the Puran-Bazar Dispensary at Chandpur in the district of Tippera:—

The Subdivisional Officer, Chandpur (*ex-officio*).
Babu Ramani Mohan Roy, zemindar and merchant.
Dr. Jagadish Chandra Acharjee, medical practitioner.
Babu Hari Benode Kunda, merchant.
Babu Aswini Kumar Chakraborty.
Babu Nabadwip Chandra Poddar, merchant.
Babu Priya Nath Saha, merchant.
Babu Upendra Nath Das, manager, Paresh Nath Sen estate.
Maulvi Abdul Gafur Mia, merchant.
Maulvi Abdul Quader, Municipal Commissioner.
Maulvi Rajjabali Master, Municipal Commissioner.
Maulvi Mantajuddin Mea, Municipal Commissioner.

H. GRAHAM, *Commissioner (offg.)*.

Noakhali, the 21st December 1934.

No. 10071J.—It is hereby notified for general information that, under section 13 of the Bengal Village Self-Government Act (Act V of 1919) read with rule 35 of the rules for election and appointment of members of union boards, Maulvi Hafez Syed Ahmed of village Fatehpur, police-station Sonagazi, has been duly elected to be a member of Amirabad union board No. V in police-station Sonagazi in the Feni subdivision of the district of Noakhali, *vice* Babu Bipin Chandra Das, deceased.

Noakhali, the 22nd December 1934.

No. 11240J.—It is hereby notified for general information that, under section 13 of the Bengal Village Self-Government Act (Act V of 1919) read with rule 36 of the rules for the election and appointment of members of union boards, Babu Radha Mohon Chakraborty of village Joynagar, police-station Chhagalnaya, has been duly appointed to be a member of the Mahamaya union board in police-station Chhagalnaya in the Feni subdivision of the district of Noakhali, *vice* Babu Madhab Chandra Chakraborty, deceased, nominated member of the said union board.

A. WHITTAKER, *District Magistrate.*

Dacca Division—Dacca.

No. 6820J.—19th December 1934.—Babu Nani Gopal Mukherji, Sub-Deputy Collector and Circle Officer, North Circle, Bhola, in the district of Bakarganj, was allowed leave on average pay up to the 13th November 1934, under rule 81 (*b*) (*ii*) of the Fundamental Rules, in extension of the leave granted to him in this office notification No. 6053J., dated the 13th November 1934.

No. 6824J.—19th December 1934.—Maulvi A. M. K. Khalilur Rahman Khadim, Sub-Deputy Collector and Circle Officer, West Circle, Patuakhali, in the district of Bakarganj, is allowed leave on average pay for ten days, under rule 81 (*b*) (*ii*) of the Fundamental Rules, with effect from the 2nd January 1935.

No. 6831J.—19th December 1934.—Mr. Prabhakar Das, Sub-Deputy Collector and Circle Officer, Atharabari Circle, in the district of Mymensingh, is allowed leave on average pay from the 2nd to the 5th January 1935, under rule 81 (*b*) (*ii*) of the Fundamental Rules.

No. 6845J.—20th December 1934.—Maulvi Nur Muhammad Chaudhuri, Sub-Deputy Collector, was allowed leave on average pay for thirteen days, under rule 81 (*b*) (*ii*) of the Fundamental Rules, with effect from the 17th November 1934.

W. H. NELSON, *Commissioner.*

Faridpur, the 13th December 1934.

No. 10448J.—It is hereby notified for general information that—

(*a*) Under sub-section (*2*) of section 6 of the Bengal Village Self-Government Act, 1919 (Bengal Act V of 1919), the following gentlemen have been duly elected to be members of the Algi union board in police-station Bhanga of the Sadar subdivision of the Faridpur district:—

Babu Jadunath Ghose.
Alajaddi Munshi.
Madan Munshi.
Babu Surendra Nath Das.
Aminaddin Munshi.
Muhammad Ibrahim Biswas.

(*b*) Under sub-section (*3*) of section 6 of the Act, the following gentlemen have been appointed by the District Magistrate of Faridpur to be members of the said union board:—

Babu Umesh Chandra Mondal.
Hochenuddin Bhuiya.
Maulvi Daliluddin.

A. E. PORTER, *District Magistrate.*

Barisal, the 20th December 1934.

No. 8823J.—It is hereby notified for general information that, under section 13 of the Bengal Village Self-Government Act, 1919 (Bengal Act V of 1919), Munshi Abdul Hamid Howlader has been duly elected to be a member of the Gourichana union board within police-station Barguna in the Patuakhali subdivision of the district of Bakarganj, *vice* Maulvi Imanaddi Howlader, removed under section 16(*1*) (*i*) of the Village Self-Government Act.

No. 8826J.—It is hereby notified for general information that, under section 13 of the Bengal Village Self-Government Act, 1919 (Bengal Act V of 1919), Munshi Aubarakali Qazi has been duly elected to be a member of the Madhabkhali union board within police-station Mirjaganj in the Patuakhali subdivision in the district of Bakarganj, *vice* Dalu Kazi *alias* Mokleuddin Kazi, deceased.

Barisal, the 21st December 1934.

No. 8829J.—It is hereby notified for general information that, under section 13 of the Bengal Village Self-Government Act, 1919 (Bengal Act V of 1919), read with rule 36 of the rules for the election and appointment of members of union boards, etc., Babu Madhusudan Saha has been appointed by the undersigned to be a member of the Kulkathi union board within police-station Nalchiti in the Sadar South subdivision of the district of Bakarganj, *vice* Babu Sashi Bhusan Das Gupta, resigned.

A. J. DASH, *District Magistrate.*

Dacca, the 22nd December 1934.

No. 12359-60M.—It is hereby notified for general information that, under section 13 of the Bengal Village Self-Government Act, V of 1919, Babu Radha Raman Shaha has been elected to be a member of the Sabhar union board in Sabhar police-station, in Sadar (North) subdivision of the district of Dacca, *vice* Babu Narendra Lal Shaha, deceased.

No. 12365-70M.—It is hereby notified for general information that, under section 13 of the Bengal Village Self-Government Act, V of 1919, Munshi Alimuddin Dewan has been appointed to be a member of the Sutrapur union board in Kaliakoir police-station, in Sadar (North) subdivision of the district of Dacca, *vice* Munshi Abdul Jabbar Dewan, deceased.

No. 12365-70M.—It is hereby notified for general information that, under section 13 of the Bengal Village Self-Government Act, V of 1919, Babu Harakumar Barman of Dighirkanda has been appointed to be a member of the Karihata union board in Kapasia police-station, in Sadar (North) subdivision of the district of Dacca, *vice* Babu Bepin Chandra Chakraverty, resigned.

B. C. PRANCE, *District Magistrate.*

Presidency Division—Calcutta.

No. 2970R.G.—20th December 1934.—Maulvi Muhammad Ilahdad, Sub-Deputy Collector and Circle Officer, Sadar, 24-Parganas, is granted leave on average pay for eleven days, under rule 81 (*b*) (*ii*) of the Fundamental Rules, with effect from the 2nd January 1935.

No. 2261M.—21st December 1934.—In exercise of the powers conferred by sub-section (*3*) of section 145 of the Bengal Municipal Act, 1932 (Bengal Act XV of 1932), I hereby authorise the Commissioners of the Bhatpara Municipality in the district of the 24-Parganas to appoint Mr. D. D. Banerjee, a person approved by me, as a salaried assessor to prepare the valuation and assessment list of the municipality.

No. 2978R.G.—21st December 1934.—This office notification No. 2667R.G., dated the 20th November 1934, temporarily placing Babu Radha Ballav Saha, Sub-Deputy Collector and Circle Officer, Kandi, Murshidabad, in charge of Sherpur-Eroali Relief Centre, is cancelled.

H. J. TWYNAM, *Commissioner.*

Notice under rule 19(5) of the Legislative Assembly Electoral Rules.

Calcutta, the 22nd December 1934.

The undermentioned candidates for election to the Legislative Assembly from the Presidency Division (Non-Muhammadan) Constituency have lodged returns of election expenses on the dates mentioned against their names. The returns and the declarations may be inspected in the office of the Commissioner, Presidency Division, at 3, Charnock Place, Calcutta, during office hours on payment of a fee of rupee one only.

Name of candidate.	Date on which return was lodged with the Returning Officer.
Babu Hemanta Kumar Sarkar ..	21st December 1934.
Babu Nagendra Nath Sen ..	22nd December 1934.

H. J. TWYNAM, *Commissioner,*
Presidency Division (Returning Officer).

Rajshahi Division—Jalpaiguri.

No. 4331J.—19th December 1934.—Babu Amarendra Nath Bhattacharjee, Sub-Deputy Collector, Rajshahi, is allowed leave on average pay from the 2nd to the 5th January 1935, under rule 81 (*b*) (*ii*) of the Fundamental Rules.

No. 4336J.—19th December 1934.—Under the provisions of rule 63 (*2*) of Chapter IV of the Bengal Jail Code, I hereby appoint the following gentleman and lady as non-official visitors of the Darjeeling Jail for a period of two years:—

Babu Ramdass Prasad.
Mrs. I. Dutt.

No. 4340J.—19th December 1934.—Under the provisions of rule 63 (*2*) of Chapter IV of the Bengal Jail Code, I appoint Rai Bahadur Nirmal Rai, O.B.E., as a non-official visitor of the Kurseong Sub-Jail in the district of Darjeeling for a period of two years.

No. 4358J.—20th December 1934.—Maulvi Khandker Abdul Hannan, Sub-Deputy Collector and Circle Officer, Nawabganj, Malda, is allowed leave on average pay for four days, with effect from the 2nd January 1935, under rule 81 (*b*) (*ii*) of the Fundamental Rules.

F. W. ROBERTSON, *Commissioner.*

No. 837J.R.—20th December 1934.—It is hereby notified under rule 19 (*5*) of the Legislative Assembly Electoral Rules that Babu Satyendra Chandra Mitra, a duly nominated candidate in the Chittagong and Rajshahi Divisions non-Muhammadan Constituency of the Legislative Assembly, has lodged his return of election expenses and declarations with the Returning Officer on the 17th December 1934. They can be inspected in the office of the Commissioner, Rajshahi Division, in office hours, on payment of a fee of Re. 1.

F. W. ROBERTSON, *Commissioner,*

Rajshahi Division, and Returning Officer.

Jalpaiguri, the 22nd December 1934.

No. 7475G.—It is hereby notified for general information that, under section 13 of the Bengal Village Self-Government Act (Bengal Act V of 1919), Munshi Sher Mamud Mahammad has been duly elected to be a member of the Garalbari union board in police-station Jalpaiguri, in the Sadar subdivision of the district of Jalpaiguri, *vice* Munshi Raj Bhol Mohammed, resigned.

No. 7477G.—It is hereby notified for general information that, under section 13 of the Bengal Village Self-Government Act (Bengal Act V of 1919), Munshi Shemajuddin Mahammed has been duly elected to be a member of the Garalbari union board in police-station Jalpaiguri in the Sadar subdivision of the district of Jalpaiguri, *vice* Babu Indra Mohan Roy, deceased.

H. GRAHAM, *Deputy Commissioner.*

Malda, the 22nd November 1934.

Under rule 32A of the election rules under the Local Self-Government Act, it is notified for general information that the 7th February 1935 and the 9th February 1935 have been fixed for the general election of members for the Malda local board in the following thanas:—

Name of thana.	Number of members.
English Bazar-Bholahat	... 1
Kaliachak	... 1
Manikchak-Ratua	... 1
Shibganj-Kaliachak	... 1
Shibganj	... 1
Nawabganj	... 1
Nachole-Gomastapur	... 1
Malda-Habibpur	... 1
Gazole-Bamongola	... 1
Kharba	... 1
Harischandrapur	... 1
Ratua	... 1

J. N. TALUKDAR, *District Magistrate.*

Registered No. C207

The Calcutta Gazette

THURSDAY, JANUARY 3, 1935.

PART IB

Educational Notices.

Dacca Division.

Dacca, the 21st December 1934.

Award of Middle Scholarships, 1934.

(Each scholarship is of the value of Rs. 4 a month and is tenable for four years from the 1st January 1935.)

Dacca district.

Open scholarships.

No.	Name of scholarship-holder.	Name of school from which the candidate appeared.	Name of school in which the scholarship is tenable.
1	Samiruddin Ahmed	Narayanpur M. E.	Dacca Government Moslem H. E.
2	Md. Mearuddin	Kapasia D. B. R. S. M. E.	Nagari H. E.
3	Rasid Ahmed	Manipura M. E.	Adiabad Islamia H. E.
4	Nepal Chandra Dutta	Ghorasal M. E.	Kaliganj H. E.
5	Md. Keramat Ali	Khidirpur M. E.	Kishoreganj Azimuddin H. E.
6	Becharam Chattopadhyaya	Nabagram M. E.	Manikganj H. E.
7	Mukunda Behari Biswas	Berash M. E.	Sabhar H. E.
8	Narayan Chandra Saha Roy	Singair M. E.	Manikganj H. E.
9	Ali Akbar Choudhury	Joypara M. E.	Nawabganj H. E.

Scholarships reserved for Muhammadans.

1	Ahmed Hossain	Manipura M. E.	Adiabad Islamia H. E.
2	Abul Hasnat Fakharuddin Muhammad.	Hatirdia M. E.	Charsindur H. E.
3	Hamisuddin Bhuia	Jampur Majhorchar M. E.	Murapara H. E.
4	Md. Mozaffar Ali	Chalakchar M. V.	Lakhpur Simulia H. E.

Scholarships reserved for backward classes.

1	Haridas Bhoumick	Toporbari M. E.	Maishamura H. E.
2	Dhananjoy Biswas	Pirijkandi M. E.	Bhairab H. E.

Mymensingh district.

Open scholarships.

No.	Name of scholarship-holder.	Name of school from which the candidate appeared.	Name of school in which scholarship is tenable.
1	Md. Habibar Rahman	Chatal Baghata M. E.	Mymensingh Zilla.
2	Jnanendra Mohon Chanda	Astadhar M. E.	Ditto.
3	Debendra Mohon Dey	Baghil M. E.	Tangail B. B. H. E.
4	Md. Rostom Ali	Govindapur M. E.	Mymensingh Zilla.
5	Monoranjan Bhattacherjee	Elashin M. E.	Santosh Jahnavi H. E.
6	Ganapati Dey	Baghil M. E.	Tangail B. B. H. E.
7	Khitindra Mohon Roy	Gavindapur M. E.	Mymensingh Zilla.
8	Kamakshya Charan Bhattacherji	Kishoreganj M. E.	Kishoreganj R.U. H. E.
9	Akshoy Kumar Das	Jangalbari M. E.	Ditto.
10	Nagendra Chandra Maitra	Birkashimnagar M. E.	Ditto.
11	Bhabatosh Chakraverty	Bajitpur M. E.	Bajitpur H. E.
12	Alimuddin Sarkar	Kokdahara M. E.	Tangail S. N. H. E.

Scholarships reserved for Muhammadans.

1	Matiar Rahman	Tatarkandi M. E.	Bajitpur H. E.
2	Khorshed Ali Dewan	Bhuapur Moslem M. E.	Mymensingh Zilla.
3	Md. Mijanur Rahman	Elashin M. E.	Santosh Jahnavi H. E.
4	Md. Imanuddin Bhuya	Agarpur M. V.	Kodalia H. E.
5	Md. Aftabuddin	Teligati M. E.	Netrakona Dutta H. E.
6	Muhammad Ali Mia	Arrahkumud M. E.	Ghior H. E.
7	Md. Alauddin Khan	Chatalbaghata M. E.	Mymensingh Zilla.
8	Abdul Hafez Talukder	Agarpur M. V.	Bhairab H. E.

Scholarships reserved for backward classes.

1	Profulla Chandra Biswas	Patuair M. E.	Kishoreganj Azimuddin H. E.
2	Kumud Chandra Talukdar	Teligati M. E.	Netrakona Dutta H. E.
3	Rangalal Das	Narandia M. E.	Tangail B. B. H. E.

Faridpur district.

Open scholarships.

1	Md. Abdur Rahman Biswas	Bagduly M. E.	Saraswati Institution, Calcutta.
2	Madhusudan Bhattacherjee	Brahmandi M. E.	Faridpur Zilla.
3	Jadav Chandra Sarkar	Amirabad M. E.	Ditto.
4	Shamsuddin Sheikh	Shibrampur M. E.	Ditto.
5	Shamsuddin Mia	Charnasirpur M. E.	Matbarerchar H. E.
6	Anil Kumar Chakravarty	Bajunia M. E.	Gopalgunj S. N. H. E.

Scholarships reserved for Muhammadans.

1	Abdur Rahman Mia	Dutta Kendua M. E.	Bajitpur R. K. H. E.
2	Fazlur Rahman Mia	Damudya Moslem M. E.	Kartikpur H. E.
3	Abdul Hakim	Charbhoira Coronation M. E.	Sakhipur Islamia H. E.

Scholarships reserved for backward classes.

1	Jogesh Chandra Biswas	Sashikar M. E.	Madaripur H. E.

Bakarganj district.

Open scholarships.

1	Muhammad Abu Hussain	Daudpur M. E.	Perojpur Government H. E.
2	Prafulla Kumar Roy	Pirojpur Town M. E.	Ditto.
3	Dhirendra Nath Roy Choudhury	Maisani M. E.	Ditto.
4	Anilbaran Sinha	Kauria M. E.	Ponabalia H. E.
5	Mukunda Lal Chakravarty	Samudekati M. E.	Jalabari H. E.
6	Abdul Latif	Charboira M. V.	Patuakhali J. H. E.
7	John Binimay Barui	Padrishibpur M. E.	Bakarganj J. S. H. E.
8	Mohammad Anwar Ali	Dhulia M. E.	Barisal Zilla.

Scholarships reserved for Muhammadans.

1	Fariduddin Ahmed	Sukdev M. E.	Bhola Government H. E.
2	Md. Meheruddin	Badalpara M. E.	Barisal Zilla.
3	Asmat Ali	Shehakati M. V.	Patuakhali J. H. E.
4	Jafar Ali Khan	Narattompur M. E.	Banoripara H. E.

Scholarships reserved for backward classes.

1	Dwijendra Nath Howladar	Patharghata M. E.	Mathbaria H. E.
2	Harendra Nath Mandal	Daudpur M. E.	Bhandaria H. E.

N.B.—(*1*) The scholarships are tenable at a Normal School for two years.

(*2*) The scholarship-holders should join their schools within one month from the date of publication of the award in the *Calcutta Gazette.*

ABUL HASHEM KHAN CHAUDHURY,

Inspector of Schools, Dacca Division.

Rajshahi Division.

Jalpaiguri, the 19th December 1934.

Results of the Middle Scholarship Examination of 1934.

The following students are awarded the middle Scholarships on the result of the Middle Scholarship Examination of 1934.

Each scholarship is of the value of Rs. 4 a month and is tenable for four years with effect from 1st January 1935.

The scholars must join their respective institutions within one month of the date of the publication of the scholarship results.

No.	Name of scholar.	Name of school from which the scholar appeared.	Name of school where the scholarship is tenable.
	Twenty-five Middle Scholarships for General Competition.		
		Rajshahi.	
1	Manindra Nath Dhar	Dangapara M. E. School	Dighapatia H. E. School.
2	Chandidas Acharjee	Khajur M. E. School	Rajshahi B. N. Academy.
3	Nagendra Nath Ghose	Ditto	Balihar H. E. School.
4	Md. Jamiruddin Mia	Walia M. V. School	Naogaon K. D. H. E. School.
		Dinajpur.	
1	Abdur Rahman, II	Lahiri M. E. School	Thakurgaon H. E. School.
2	Eyabuddin Ahmed	Charta M. E. School	Ditto.
3	Afsarali Ahmed	Nazipur M. E. School	Balurghat H. E. School.
4	Mirza Md. Abdul Malek	Mirzapur M. E. School	Jalpaiguri Zilla School.
		Jalpaiguri.	
1	Sudhir Kumar Ghose	Mainaguri M. E. School	Jalpaiguri Zilla School.
2	Dhirendra Nath Sen Gupta	Patgram M. E. School	Ditto.
		Rangpur.	
1	Md. Nural Islam Choudhury	Saghatta M. E. School	Kurigram H. E. School.
2	Abdul Quasem Shah	Jagirhat Board M. E. School	Rangpur Zilla School.
3	Md. Fazlal Karim	Jumarbari M. E. School	Sonatala H. E. School.
4	Md. Abdul Quder Mandal	Bharatkhali Board M. V. School	Gaibandha H. E. School.
		Bogra.	
1	Suresh Chandra Sarkar	Radhanagar M. E. School	Sonatala H. E. School.
2	Makhan Chandra Mohanta	Jamirbaria M. E. School	Kagail H. E. School.
3	Md. Nural Islam	Mahishaban M. E. School	Bogra Zilla School.
		Pabna.	
1	Nagendra Nath Das	Talgachhi M. E. School	Siliguri H. E. School.
2	Mozammal Hoq	Jnanadayini M. E. School (Serajganj)	Pabna Zilla School.
3	Radha Gobinda Pal	Ditto	Serajganj B. L. H. E. School.
4	Rabindra Nath Ghose	Hatboyra M. E. School	Ditto.
		Malda.	
1	Md. Shaukat Ali	Alinagor Board M. E. School	Nawab Bahadur Institution (Murshidabad).
2	Abdur Rahim Choudhury	Ranihati M. E. School	Rajshahi Collegiate School.
3	Md. Makbul Hossain	Shibganj M. E. School	Lalgola H. E. School (Murshidabad).
		Darjeeling.	
1	Randhir Rai	Ghum M. E. School	Darjeeling High School.
	Fifteen Middle Scholarships reserved for Muhammadans.		
1	Azharali Khandkar	Kashimpur M. E. School (Rajshahi)	Naogaon K. D. H. E. School.
2	Md. Mohiruddin Mandal	Kaligram M. E. School (Rajshahi)	Ditto.
3	Md. Yasufali Mandal	Agradigun M. E. School (Dinajpur)	Mahadevpur S. M. H. E. School.
4	Mirza Md. Sultan Alam	Mirzapur M. E. School (Dinajpur)	Thakurgaon H. E. School.
5	Khatibuddin Mohammad	Sonahar M. E. School (Jalpaiguri)	Debiganj H. E. School.
6	Musammat Marium Nesa	Nautara M. E. School (Rangpur)	Rangpur Girls' H. E. School.
7	Azharali Mian	Bhitarbanda M. E. School (Rangpur)	Kurigram H. E. School.
8	Md. Darajuddin Mondal	Kamarjani M. E. School (Rangpur)	Belka H. E. School.
9	Md. Mohsenali	Kasba M. E. School (Bogra)	Talora H. E. School.
10	Md. Abbas Ali	Gabtali M. E. School (Bogra)	Bogra Zilla School.
11	Md. Tabibar Rahman	Ditto	Sonatala H. E. School.
12	Abdur Rakib Khan	Dwaripur Victoria M. E. School (Pabna).	Shahzadpur H. E. School.
13	Md. Safiuddin	Ditto	Ditto.
14	Naimuddin Ahmed	Ranihati M. E. School (Malda)	Nawabganj H. M. Institute.
15	Golam Zainal Abedin	Kurseong Boys' M. E. School (Darjeeling).	Darjeeling High School.
	Eight Middle Scholarships reserved for depressed and backward classes.		
1	Akshay Charan Pramanik	Kaligram M. E. School (Rajshahi)	Rajshahi Collegiate School.
2	Lakshman Majhi	Patiram M. E. School (Dinajpur)	Rajarampur H. E. School.
3	Nagendra Nath Das	Mandalghat M. E. School (Jalpaiguri)	Sonaulla Institution.
4	Dinanta Nath Roy	Mainaguri M. E. School (Jalpaiguri)	Polwhere H. E. School, Domohinis
5	Panchanan Barman	Sundarganj M. E. School (Rangpur)	Belka H. E. School.
6	Ram Krishna Barman	Kundagram M. E. School (Bogra)	Sonatala H. E. School.
7	Gopiballav Mandal	Jamalganj M. E. School (Bogra)	Khanjanpur H. E. School.
8	Ashutosh Sarkar	Chamagram M. E. School (Malda)	Nawabganj H. M. Institute.

S. P. BANERJEE,
Second Inspector of Schools, Rajshahi Division-in-charge.

Education Department, Bengal.

NOTIFICATION.

Calcutta, the 20th December 1934.

The Dutt Scholarship of Rs. 14 a month, tenable for one year with effect from 1st June 1934, is awarded to Amulya Kumar Depurkayastha, who matriculated from the Silchar Government High School and stood first in Literature among the successful candidates at the Matriculation Examination of Calcutta University held in 1934.

The scholarship is tenable at the Presidency College, Calcutta.

J. M. BOTTOMLEY,

Director of Public Instrn., Bengal.

University of Dacca.

NOTIFICATION No. 2891/Ex.

Ramna, Dacca, the 18th December 1934.

Re *Supplementary Final M.A. Examination of July 1935.*

The Supplementary Final M.A. Examination in all subjects except in Mathematics for students who had completed their M.A. course and were eligible for appearing at the Final M.A. Examination in or before 1934, will, as previously notified, be held in July 1935. The exact dates of the examination will be notified in due course.

2. Candidates must apply to their respective heads of departments for details about the syllabuses which may not be identical with that in force in 1934.

3. Applications for admission to the Supplementary Final M.A. Examination of 1935 must be made on the printed forms which will be obtainable at the office of the Provost of the Hall to which the student belongs.

4. Examination entry forms after they have been duly filled in and signed by the candidates and countersigned by the respective heads of the departments must be presented by the candidates to the Provosts of their Hall not later than Monday, the 21st January 1935.

5. The word "Supplementary" must be written on the examination entry forms before they are submitted by the candidates to the heads of the departments for countersignature.

6. Candidates must submit their University diplomas or the Preliminary M.A. Certificates, as the case may be or both, along with their examination entry forms to the Provosts as will be demanded by the Provosts.

7. Candidates must take back their diplomas or certificates, as the case may be, from the Provosts of the Halls concerned within a fortnight after the examination is over, failing which the Provosts will not be responsible for their safe-keeping.

8. The examination entry forms, after they have been checked by the Provosts, will be forwarded by them to the Accounts office of the University not later than Monday, the 28th January 1935. The checking of the entry forms by the Provosts will be regarded as final.

9. Candidates must deposit their proper examination fees and all other outstanding University dues to the Accounts office of the University on the dates noted below for certification that all University dues have been paid in full:—

Dates for payment of fees.

Time—11-30 a.m. to 2 p.m.

Dacca Hall—4th and 5th February 1935.
Jagannath Hall—4th and 5th February 1935.

Salimullah Muslim Hall—5th and 6th February 1935.

The fee for the examination is Rs. 60 only.

10. The Accounts office will send all the entry forms of the candidates who have paid their examination fees and other dues, if any, to the examination section by the 11th February 1935 at the latest.

11. Examination fees and other dues must be paid on the due dates and no extension of time will be allowed under any circumstances whatsoever. Candidates are required to pay the examination fees and other dues into the Accounts office of the University. If the fees are sent by postal or telegraphic money order, full details of the candidates must be given and the correct amount due must be sent, otherwise the money order will be refused. Fees sent in any other way, *e.g.*, by registered or insured post will not be accepted.

N. AHMAD, *Registrar.*

Presidency Division.

40-1A, Free School Street, Calcutta, the 20th December 1934.

The following candidates have passed the Primary (Maktab) Final Examination, 1934 :—

(E) indicates that the candidates have passed in English.

Roll No.	Name.	Division.
	24-Parganas District.	
	Behala H. E. School Centre.	
	Chowlkhola Board U. P.	
1	Apurbakrishna Chakravarti (E) ..	I
	Nayachawk U. P.	
2	Gour Ch. Adhikari (E) ..	I
	Manuel F. P.	
3	Sailesh K. Sen Gupta (E) ..	I
4	Kamalesh Chatterji (E) ..	I
	Putiari U. P.	
5	Madanmohan Mukherji (E) ..	II
	Gholsapur U. P.	
6	Dayananda Sinha (E) ..	I
	Basudebpur U. P.	
7	Ratan Ch. Ghosh (E) ..	II
	Manuel F. P.	
8	Santosh K. Biswas (E) ..	I
	Sibarampur U. P.	
9	Radhakrishna Chatterji (E) ..	II
	Khariberia Board U. P,	
10	Harekrishna Adhikari (E) ..	II
	Goza U. P.	
11	Araninda Ghosh (E) ..	II
14	Baidyanath Ghosh (E) ..	I
	Ariapara I., U. P.	
15	Nishikanta Karmakar (E) ..	I
	Dhakuria U. P.	
16	Sunil K. Mukharji (E) ..	I
17	Satyabikas Banerji (E) ..	II
	Ramchandrapur U. P.	
18	Santosh K. Ghosh ..	II
19	Chittaranjan Das ..	II
	Mamudpur U. P.	
20	Harendra N. Bakuli (E) ..	I
	Ramchandrapur U. P.	
21	Birendra N. Ghosh (E) ..	I
	Samali U. P.	
22	Sailendra N. Mazumdar (E) ..	I
23	Fanindra N. Chatterji ..	II
	Srikrishnapur U. P.	
24	Bibhutibhusan Roy (E) ..	I
	Udairampur U. P.	
25	Sanyasi Ch. Kramakar (E) ..	I

Roll No.	Name.	Division.
	Russa U. P.	
28	Baladeb Misra (E) ..	II
29	Kanai Lal Mitter (E) ..	II
	Gagon Gohalia U. P.	
30	Debendra N. Chakravarti (E) ..	II
31	Aswini K. Chatterji (E) ..	I
	Rashpunji U. P.	
32	Panchucharan Naskar (E) ..	I
34	Sailendrakumar Rai Barman (E) ..	II
	Rajak Gohalia U. P.	
37	Panchanan Biswas (E) ..	I
	Kriparampur U. P.	
38	Biswanath Parui (E) ..	II
39	Sidheswar Khamaru (E) ..	I
40	Sadhan Ch. Bera (E) ..	I
41	Panchu Charan Dolui (E) ..	I
	Mamudpur U. P.	
42	Ajit Kumar Samanta (E) ..	I
43	Mihirlal Mandal (E) ..	I
44	Thakurdas Das (E) ..	II
45	Mohinimohan Manna (E) ..	I
	Kriparampur U. P.	
46	Manoranjan Bora (E) ..	I
47	Bishnupada Mandal (E) ..	I
48	Batakrishna Mandal (E) ..	II
	Dosotina Maktab.	
49	Satish Ch. Gain (E) ..	II
	Ramchandranagar U. P.	
50	Debendra N. Bera (E) ..	I
51	Nibhanani Samanta (E) ..	I
52	Sudhirkumar Bonu (E) ..	I
	Samali U. P.	
54	Jatindra N. Dhali (E) ..	I
	Srikrishnapur U. P.	
55	Fanibhusan Das (E) ..	I
56	Gostha Behari Samanta ..	I
57	Annada Prasad Manna (E) ..	I
	Gotalahat U. P.	
58	Nishikanta Pal (E) ..	I
59	Kalipada Bhowmik (E) ..	II
	Nethtana Maktab.	
60	Lakshmikanta Manna (E) ..	I
	Udairampur U. P.	
61	Bishnupada Das (E) ..	I
62	Santosh K. Mandal (E) ..	I
	Jorabazar Maktab.	
64	Khagendra N. Mandal (E) ..	I
65	Kshitish M. Mandal (E) ..	I
	Garfa U. P.	
66	Lakshman Ch. Patwari (E) ..	I
67	Kalipada Naskar (E) ..	I
	Gagan Gohalia U. P.	
69	Pulin B. Kantal (E) ..	II
71	Bishnupada De (E) ..	II

Roll No.	Name.	Division.
	Basudebpur U. P.	
72	Gangaram Sarkar (E)	I
74	Panchanan Das (E)	I
	Jaychandipur U. P.	
75	Manmatha K. Pramanik (E)	I
76	Jagannath Pramanik (E)	I
	Ariapara U. P. II.	
78	Sibkrishna Panit (E)	II
79	Bhabendra N. Sapui (E)	II
81	Santosh K. Mandal (E)	I
	Ariapara U. P. I.	
82	Felaram Sasmandal (E)	I
83	Santosh K. Mondal (E)	II
	Chowlkola Board U. P.	
84	Prafulla Kumar Maiti	II
	Rajarampur U. P.	
85	Kanai Lal Mondal (E)	I
86	Lalit Mohan Parbat (E)	I
87	Patitpaban Naskar (E)	I
88	Ramdayal Mondal (E)	I
89	Surendra N. Mondal (E)	I
90	Anukul Ch. Parbat (E)	II
91	Hrishikesh Mandal (E)	I
	Gajachandipur F. P.	
92	Dinesh Ch. Kayal (E)	I
93	Bhabendra N. Das (E)	I
94	Dhiraj Ch. Koyal	I
95	Sachindra N. Patra (E)	I
96	Niranjan Khan (E)	II
98	Atul Kr. Sardar	II
	Nayachawk U. P.	
99	Adhar Ch. Mandal (E)	II
	Bethuabati U. P.	
100	Nalinilochan Khara (E)	I
101	Rajendra Lal Sardar (E)	I
102	Mahadeb Sapui (E)	I
103	Lakshminarayan Das (E)	I
	Mayapur Board U. P.	
104	Mihilal Naskar (E)	I
	Manual F. P.	
105	Amiya Kumar Haldar (E)	I
106	Madan Mohan Mondal (E)	I
107	Haradhan Rai (E)	I
108	Purna Ch. Santra (E)	I
109	Satyacharan Jashu (E)	I
110	Jiban Kr. Mondal (E)	I
	Barisa Panchmasjid U. P.	
111	Pachu Charan Bachar (E)	II
	Putiari U. P.	
112	Bhutnath Naskar (E)	I
113	Anil Kumar Mondal (E)	I
	Gholsahapur U. P.	
114	Gopal Ch. Ruidas (E)	I
	Ariapara I, U. P.	
115	Karnadhar Sasmandal (E)	I
116	Nabakumar Gurey (E)	I
	Hawri U. P.	
117	Sudhir Ch. Manna (E)	I
118	Kalipada Manna (E)	I

Roll No.	Name.	Division.
	Sivrampur U. P.	
119	Sanyasi Charan Haldar (E)	II
120	Manik Ch. Khanra (E)	I
121	Sm. Jayabala Dasi (E)	II
	Putkhali U. P.	
122	Bhim Ch. Naskar (E)	I
123	Mihirlal Naskar (E)	I
124	Biswanath Naskar (E)	I
125	Jatindra N. Mondal	I
126	Tarapada Sardar (E)	II
	Akra Mission U. P.	
127	Satis Ch. Dhara (E)	II
	Khariboria Board U. P.	
130	Pulin B. Naskar (E)	II
131	Lalit Mohan Naskar (E)	I
132	Pulin Ch. Sardar (E)	II
	Bonoraipur U. P.	
133	Manik Ch. Mondal (E)	II
134	Dhirendranath Mondal (E)	II
135	Brajabashi Patra (E)	II
	Pujiali I, U. P.	
136	Jugal Krishna Khara(E)	I
137	Jugal Kr. Manna (E)	II
138	Harekrishna Sadhukhan (E)	II
	Puajili II, U. P.	
141	Bimal Kumar Bag (E)	II
142	Gopi Krishna Pal (E)	II
143	Prafulla Kumar Pal (E)	II
144	Anukul Ch. Pal (E)	I
145	Khagendranath Das (E)	II
	Ariapara I, U. P.	
146	Durlabh Ch. Mondal (E)	II
	Basudebpur U. P.	
147	Sk. Omed Ali (E)	II
148	Sk. Aminuddin (E)	II
	Jaychandipur Maktab.	
150	Sk. Jainal Abdein (E)	I
	Banjanharia Maktab.	
151	Sk. Attar Ali (E)	II
	Ariapara I, U. P.	
155	Guljar Ali Mallik (E)	I
156	Rejman Shaikh (E)	II
	Kantapukur Maktab.	
157	Sk. Abdul Karim Buksh (E)	II
158	Sk. Kader Buksh (E)	II
159	Harun-ar-Rashid (E)	II
160	Sk. Babur Ali (E)	II
	Alampur U. P.	
162	Md. Azaharali Mallik (E)	II
163	Sk. Abdul Khalek Jamadar (E)	I
164	Sk. Abdul Halim (E)	II
	Mayapur Board U. P.	
165	S. K. Md. Hossain	I
	Pujali II, U. P.	
167	Abdur Rauf Mallick (E)	I
	Putiari U. P.	
168	Sk. Mafizuddin (E)	II

Roll No.	Name.	Division.
	Rajak Gohalia U. P.	
169	Md. Abdul Kasem (E)	I
170	Md. Abdur Rashid (E)	II
	Dosotina Maktab.	
171	Yakub Ali Shaikh (E)	I
172	Md. Nawabuddin Mallick (E)	I
174	Md. Azahar Mallick (E)	I
175	Abdul Latif Molla (E)	I
	Enayetnagar Maktab.	
176	Md. Emambuksh Shaikh (E)	I
177	Md. Saugat Ali Mistri (E)	I
178	Golam Mahiuddin Mirda (E)	I
180	Md. Abdul Bari Shaikh (E)	I
181	Md. Azizar Rahman Mistri (E)	II
182	Md. Taheruddin Shaikh (E)	I
183	Md. Mafizuddin Mallick (E)	II
	Samali U. P.	
184	Yusuf Nabi Shaikh	I
	Nethtana Maktab.	
185	Kalemuddin Shaikh (E)	I
	Jorabagan Maktab.	
187	Kazi Ashraf Hossein (E)	I
188	Shahadatali Mondal (E)	I
	Garfa U. P.	
189	Sk. Sahib Jan (E)	I
190	Sk. Mathew Molla (E)	I
	Baruipur H. E. School Centre.	
	Mahinagar U. P.	
1	Umarani Debi (E)	I
2	Santosh Kumar Banerjee (E)	II
3	Patitoshkumar Banerjee (E)	I
4	Mriganka Bhusan Mukerjee (E)	I
5	Sarat Ch. Mukerji (E)	I
	Baikunthapur U. P.	
6	Satyacharan Ghosh (E)	I
7	Rabindranath Chakravarti (E)	I
8	Sukumar Chatterji (E)	II
9	Rabindra Nath Mitra (E)	II
10	Amulya Kumar Ghosh (E)	I
11	Charu Ch. Roy Chowdhury (E)	II
12	Mathuranath Ghosh (E)	I
	Kodalia U. P.	
13	Kanai Lal Chakravarti (E)	I
14	Satindranath Bhattacherji (E)	I
15	Madanmohan Ghosal (E)	II
17	Narendra Nath Karmakar (E)	II
	Sibpur U. P.	
18	Sitanath Das (E)	I
19	Rebatiranjan Das (E)	II
20	Netaipada Das (E)	I
	Multi U. P.	
21	Sibacharan Sen Mandal (E)	I
	Bansunduria U. P.	
24	Phanibhusan Karmakar (E)	II
	Sitakundu F. P.	
25	Kalikrishna Mukerjee (E)	II
26	Ambika Charan Mukerjee (E)	I
27	Adrijaprosad Bhattacharjee (E)	I
	Narayanpur U. P.	
28	Lalit Mohan Chattorjee (E)	II
	Baikunthapur U. P.	
29	Fakirchand Mukerjee (E)	I
30	Rajanikanta Ghosh (E)	I
	Doul U. P.	
31	Benimadhab Das (E)	II
	Ramchandrapur U. P.	
32	Palan Krishna Bairagi (E)	II
	Jalpai U. P.	
34	Prajapati Mandal (E)	II
35	Panchu Mandal (E)	II
36	Publinbehari Mandal (E)	II
	Kodalia U. P.	
38	Gopal Mohan Nath (E)	II
	Naliakhali U. P.	
40	Kangal Haldar (E)	I
41	Kalikrishna Haldar (E)	II
	Raibagini U. P.	
42	Sushilkumar Sinha (E)	I
	Gohalberia U. P.	
47	Abhiram Haldar	II
	Srikrishnanagar U. P.	
48	Bishnupada Mandal (E)	II
	Ramchandrapur U. P.	
49	Dwijapada Mistri (E)	I
50	Mohan Ch. Sircar (E)	II
	Sitakundu F. P.	
52	Thakurdas Sen (E)	II
	Champahati F. P.	
56	Panchugopal Baidya (E)	I
57	Bholanath Biswas (E)	I
58	Nirodbaran Mandal (E)	I
59	Batakrishna Mandal (E)	I
60	Palan Ch. Sardar (E)	II
62	Harendra N. Mandal (E)	II
63	Dwijapada Mandal (E)	II
	Chandanpukur U. P.	
65	Nilratan Purkait (E)	II
	Nischintapur U. P.	
66	Abanibhusan Naskar	I
67	Kesab Ch. Biswas	II
	Pratapnagar U. P.	
68	Khagendra N. Naskar	II
69	Mohan Ch. Naskar	II
	Naliakhali U. P.	
72	Bhudar Ch. Haldar (E)	I
73	Ratan Ch. Mandal	II
	Korakati U. P.	
75	Amulyadhan Sapui (E)	I
76	Nalinikanta Naskar (E)	II
	Maszidbati U. P.	
77	Sudhansu K. Roy (E)	II
	Sitakundu F. P.	
78	Chintamani Mandal (E)	II

Roll No.	Name.	Division.
	Khakurdah U. P.	
79	Arjun Ch. Das (E)	I
80	Anukul Ch. Das (E)	I
	Champahati F. P.	
81	Sidheswar Naskar (E)	II
	Baikunthapur U. P.	
82	Santosh K. Biswas (E)	I
	Naliakhali U. P.	
83	Biswanath Sardar	II
	Maszidbati U. P.	
84	Dhirendra N. Maiti (E)	I
	Benipur U. P.	
84A	Sudhir Chandra Haldar	II
	Multi U. P.	
84B	Bhabasindu Mandal (E)	II
	Makhaltola U. P.	
84C	Krishnadas Pal (E)	I
84D	Susen Chandra Biswas (E)	I
	Nischintapur U. P.	
85	Sk. Alimaddin Molla	II
	Deuli U. P.	
87	Din Md. Tarafdar (E)	II
88	Golam Nabi Tarafdar (E)	II
	Khagra U. P.	
89	Abdul Sobhan Sardar (E)	II
91	Md. Ali Sardar (E)	I
	Kachua U. P.	
92	Judge Ali Mistri (E)	I
94	Bahauddin Molla (E)	I
	Nagartala U. P.	
95	Rawshan Ali Sardar (E)	I
	Dhoyaghata U. P.	
97	Abdul Jabbar Sapui (E)	I
98	Eman Ali Sardar (E)	I
99	Sultan Ali Laskar (E)	II
101	Musammat Ajman Bibi (E)	I
	Padmajala Maktab.	
102	Md. Basarat Ali (E)	II
103	Md. Ashraf Ali Baidya (E)	I
104	Md. Akkas Ali (E)	II
	Padmerar Y. M. U. P.	
105	Md. Achimuddin (E)	II
106	Md. Yad Ali (E)	I
	Sarisadaha U. P.	
108	Daud Ali Mallik (E)	II
	Harinarayanpur U. P.	
110	Baburali Mondal (E)	II
	Banerjee Chawk U. P.	
111	Rustam Ali Sheik	I
	Benipur Y. M. U. P.	
112	Md. Maniruddin	II

Roll No.	Name.	Division.
	Bhangore H. E. School Centre.	
	Naskarati Binapani Sikshalaya.	
1	Kamalaksha Chatterjee (E)	I
2	Laksmikanta Roy Mondal (E)	I
	Kharamba Bani Vidyalaya.	
4	Harinarayan Modak	II
	Chandpur U. P.	
5	Becharam Ghosh	I
6	Nilmani Ghosh	II
	Chaltaberia U. P.	
7	Krishnamohan Ghosh	II
	Kalikapur U. P.	
8	Sitalaprasad Das Gupta (E)	I
10	Hazrapada Ghosal (E)	II
	Naskarati U. P.	
12	Matilal Naskar (E)	II
13	Gosthabehari Mondal (E)	I
14	Balaramdas Mondal (E)	II
	Kharamba U. P.	
15	Hem Ch. Mondal (E)	I
	Shekharpur U. P.	
16	Tarapada Rai Naskar	II
17	Dukhiram Rai Dhali	II
	Jaipur U. P.	
18	Kartik Ch. Biswas (E)	I
19	Tarapada Rai Sardar (E)	I
20	Santosh Kumar Biswas (E)	II
	Chiletala U. P.	
21	Santi Lata Mondal	I
	Beniara U. P.	
24	Chaturanan Mondal	II
25	Bharat Ch. Mondal	II
	Nawabad U. P.	
29	Kazi Mozammal Huq	I
	Bakshahar U. P.	
30	Asmatali Gazi	I
31	Esaratali Molla	II
	Konchpukur Maktab.	
33	Esmail Molla (E)	II
	Bankri Maktab.	
34	Anwarali Molla	I
	Joypur U. P.	
35	Wazedali Molla (E)	II
36	Imarat Ali Molla (E)	II
	Chaltaberia U. P.	
37	Matiar Rahman Molla (E)	I
38	Hedaitali Molla (E)	II
39	Md. Sariatulla Molla (E)	I
	Nangla U. P.	
42	Md. Abdul Barek (E)	I
43	Md. Shaheb Ali (E)	II
	Shonpur U. P.	
45	Khoda Buksh Naskar	I

Roll No.	Name.	Division.
	Kalikapur U. P.	
46	Mofizuddin Molla	II
47	Golam Rahman Gharami (E)	I
	Kantali U. P.	
48	Md. Rezwan Ali (E)	I
	Barrackpore Government H. E. School Centre.	
	North Baranagar U. P.	
1	Bhutnath Mukerjee (E)	I
2	Tinkari Mukerjee (E)	II
3	Jagannath Mukerjee (E)	I
5	Sailendra Nath Mukerjee (E)	II
6	Netai Ch. Chatterjee (E)	I
7	Promode Kumar Sanyal (E)	II
8	Biwanath Maitra (E)	II
9	Gopal Ch. Bhattacharjee (E)	II
10	Nirmal Ch. Basu (E)	I
11	Manik Ch. Pal (E)	I
12	Bimal Krishna Pal (E)	II
13	Sib Charan Das	II
14	Manoranjan Das Adhikari (E)	II
	Kamarhati Craig U. P.	
15	Hitendranath Mukerjee (E)	I
16	Krishnadhan Chakravarty (E)	I
17	Sailendra Nath Banerjee (E)	I
18	Rajnarayan Chatterjee (E)	II
19	Madanmohan Banerjee (E)	II
20	Kanailal Chatterjee (E)	II
21	Sibupada Banerji	II
22	Indrajitkumar Bhattacherjee	II
23	Kalicharan Bhattacherjee (E)	II
24	Gour Chandra Ghosh (E)	I
	Bandhipur Sisu Vidyalaya.	
25	Kshitis Ch. Biswas	I
26	Bimala Bala Basu	II
27	Kanailal Basu (E)	II
	Nona Chandanpukur U. C. U. P.	
28	Panchugopal Ganguly (E)	I
29	Harulal Sinha Rai (E)	II
	Sadarbazar Bengali U. P.	
30	Kanik Prasad Saha (E)	I
31	Hiralal Haluai (E)	I
32	Sudhir Kumar Mukerjee (E)	I
33	Sabitribala Debi (E)	I
34	Lachiprasad Haluai (E)	I
35	Harendra N. Basu (E)	I
36	Harimohan Mukerji (E)	I
37	Rajendra N. Mukerji (E)	I
	Jetia U. P.	
38	Sachhidananda Datta (E)	I
39	Adhish Ch. Chakrabarti (E)	I
40	Krishna Ch. Ghosh (E)	I
41	Narendra N. Ghosh (E)	I
42	Nakuleswar Bhattacherji (E)	I
	Barrackpore B. B. U. P.	
43	Paritosh Ghosh (E)	II
44	Satiprasad Karkari (E)	I
45	Harendra N. Ghosh (E)	I
	Sukchar U. P.	
46	Kasinath Banerji (E)	I
47	Haradhan Chatterji (E)	II
48	Nandarani Mittra (E)	I
49	Gourmohan Naug (E)	II
	Ghola U. P.	
50	Abani N. Banerji	II
	Alambazar U. P.	
52	Surendra Kr. Banerji (E)	I
53	Santosh Kumar Das	II
	Agarpara U. P.	
55	Haradhan Mukerji (E)	I
57	Anchalkumar Banerji	II
59	Gopal Ch. Ghosh	II
	Bonhughly U. P.	
60	Probhat Kumar Mukerji (E)	II
61	Nishitkumar Mukerji	I
62	Suhas Ch. Bhaduri (E)	I
63	Satya Charan Das (E)	I
64	Krishna Ch. Pradhan (E)	I
65	Manmatha N. Maiti (E)	I
	Narayanpur F. P.	
66	Krishna Narayan Mukerji (E)	I
67	Bejaykumar Pal (E)	I
68	Debendra N. Ghosh (E)	I
69	Nirmalendu Banerji (E)	II
	Nagerbazar F. P.	
70	Jatindranath Dutt (E)	II
	Athpur U. P.	
71	Gour Ch. Ghosh (E)	I
72	Nrisinha Ch. Ghosh (E)	II
73	Ashutosh Pal (E)	I
	Titagar Williamson A.-U. U. P.	
74	Gomeslal Pasi (E)	II
	Jagaddal Ganes U. P.	
76	Haranarayan Gope (E)	I
	Titagar Sri Hindi U. P.	
77	Joydoyal Jha	II
78	Kamla Prasad Panday	I
	Titagar Free Hindu U. P.	
80	Tarawati Debi	II
	Titagar Mill-Hand Hindi Primary.	
81	Adyaprasad Tewari	I
	Nonachandanpukur U. C. U. P.	
86	Dulalchand Parel (E)	I
	Sinthi Shikshyayatan U. P.	
87	Madan Ch. Das (E)	I
	Jetia U. P.	
89	Tarapada Ghatak (E)	I
	Sukchar U. P.	
90	Biswanath Kundu (E)	II
	Kanchrapara Udbodhini U. P.	
91	Chunilal Das (E)	I
	Bonhughly U. P.	
92	Mahadeb Dutt (E)	I
	Nagerbazar F. P.	
94	Biswanath Mandal (E)	II
	Jagaddal Srikrishna U. P.	
95	Bajnath Prosad Dushadh	II

Roll No.	Name.	Division.
	Kankinara Hindi U. P.	
98	Gopal Koiri ..	I
	Titagar Sri Hindi U. P.	
99	Radhey Syam ..	II
	Titagar Mill-Hand Hindi Primary.	
101	Sonaram ..	II
	Kamarhati K. P. S. Hindi U. P.	
102	Seogobinda Ram ..	I
103	Chhedi Ram ..	II
	Wesleyan Methodist Hindi U. P.	
104	Mathura Prosad (E) ..	II
106	Morari Lal (E) ..	I
107	Ram Prosad (E) ..	II
108	Hriday Naud (E) ..	II
	Kamarhati Hindi U. P.	
109	Sarajaprosad Shah ..	II
	North Baranagar U. P.	
110	Tarapada Dutt (E) ..	I
112	Taruni Charan Maiti ..	II
	Kamarhati Craig U. P.	
113	Sures Ch. Pal ..	II
114	Habul Ch. Das ..	I
115	Bibhuti Bhusan Bairagi ..	I
116	Nangiopal Sadhukhan ..	II
117	Kartick Ch. Majhi ..	II
118	Kalicharan Koley (E) ..	I
	Balagar Nandadulal U. P.	
119	Probhas Ch. Pal (E) ..	II
	Nonachandanpukur U. C. U. P.	
120	Suryanarain Sarnakar (E) ..	I
	Sinthi Sikshyayatan U. P.	
121	Bishnupada Das (E) ..	II
122	Basantakumar Das (E) ..	II
123	Gopal Ch. Mandal (E) ..	II
125	Batakrishna Das (E) ..	II
	Sadarbazar Bengali U. P.	
127	Balai Ch. Pal ..	II
128	Ratankali Samanta (E) ..	I
	Barrackpore Binod Behari U. P.	
130	Nishikanta Pal (E) ..	I
	Sukchar U. P.	
131	Jagatbrahma Set (E) ..	I
132	Kumari Namita Nandi (E) ..	I
133	Bibhuti Bhusan Mallick (E) ..	II
134	Panchugopal Manna (E) ..	I
135	Kalipada Das ..	I
136	Lakshminarayan Sarkar ..	II
137	Satyacharan Rai (E) ..	I
	Khardah Nityananda U. P.	
138	Golak Behari Das (E) ..	II
139	Krishna Ch. Nath (E) ..	II
140	Sudhir Ch. Nath ..	II
	Alambazar U. P.	
141	Panchugopal Maiti (E) ..	I
	Agarpara U. P.	
143	Gobinda Ch. Das (E) ..	II
	Garifa F. P.	
147	Manikchand Parsad ..	I
148	Ramchandra Parsad (E) ..	I
	Kankinara Hindi U. P.	
150	Bhusi Shah Teli ..	I
	Bhatpara A. K. U. P.	
151	Gopal Ch. Pal (E) ..	I
152	Panchugopal Pal ..	I
	Titagar Mill-Hand Hindi Primary.	
153	Dilan Ram ..	II
154	Ghuguli Ram ..	II
	North Barnagar U. P.	
155	Sk. Chhangur Mia (E) ..	II
	Sadarbazar Bengali U. P.	
157	Sk. Aminul Islam (E) ..	II
	Teghoria F. P.	
158	Badal Mondal ..	II
159	Enjalali Mondal ..	II
160	Khatib Mondal ..	II
	Agarpara U. P.	
161	Sk. Akbar Hossain (E) ..	I
	Sadarbazar Anjuman Maktab.	
164	Md. Shamir (E) ..	I
165	Md. Mokhtar (E) ..	I
167	Osman Ali (E) ..	I
169	Abdul Rahman (E) ..	I
	Matpara Maktab.	
170	Sk. Saokat Ali (E) ..	I
	Chandanpukur Maktab.	
171	Md. Nizamuddin (E) ..	II
172	Md. Jalaluddin (E) ..	II
173	Md. Rajabali (E) ..	I
	Titagar Williamson Anglo-Urdu U. P.	
174	Md. Hossein Khan (E) ..	II
	Garifa F. P.	
175	Zamun Khan Peshwari (E) ..	I
176	Abdur Rahman (E) ..	II
	Wesleyan Methodist Hindi U. P.	
177	Md. Ishaque (E) ..	II
178	Jai Masih (E) ..	I
179	Amardro Nath Singh (E) ..	II

Barasat Centre.

	Shetpur U. P.	
1	Mahadeb Kumar Ghosh (E) ..	I
2	Biswoswar Rai (E) ..	I
3	Satyacharan Rai (E) ..	I
4	Ajitkumar Mandal (E) ..	I
	Mirzapur F. P.	
7	Pramathanath Mandal (E) ..	I
8	Ganesh Chandra Biswas (E) ..	II
9	Haridas Paik ..	II
10	Kartick Ch. Biswas (E) ..	II
	Gouripur P. M. U. P.	
11	Kalipada Ghosh (E) ..	II

Roll No.	Name.	Division.
	Kirtipur U. P.	
13	Dulal Ch. Ghosh (E) ..	I
	Digha Sussex Trust U. P.	
15	Bimala Bala Chatterjee (E)	I
16	Kalipada Ghosh (E) ..	I
	Ballavpara F. P.	
17	Govinda Charan Ballav (E) ..	I
18	Narain Ch. Mondal (E) ..	II
19	Gourpada Ballav (E) ..	I
	Bera U. P.	
20	Sunil Kumar Mukerji ..	I
21	Bimal Ch. Mukerji ..	I
	Dariapur U. P.	
22	Nagendranath Ghosh ..	I
23	Surendra Nath Ghosh (E) ..	I
25	Netai Ch. Ghosh (E) ..	I
26	Gour Ch. Ghosh (E) ..	II
	Rampur Board U. P.	
27	Harendranath Ghosh (E) ..	II
	Chowmuha U. P.	
28	Bishnu Ch. Karmakar (E) ..	II
	Madhyamgram U. P.	
29	Bejaykrishna Haldar (E) ..	II
30	Shama Charan Paik (E) ..	II
31	Anil Krishna Mandal (E) ..	II
32	Gostha Behari Mandal (E) ..	I
	Dadpur U. P.	
33	Panchanan Ganguly (E) ..	I
	Mirzapur F. P.	
34	Sahahdeb Mandal (E) ..	II
	Digha Sussex Trust U. P.	
36	Bejoy Kumar Das (E) ..	I
	Rampur Board U. P.	
37	Tulsi Charan Sadhukhan (E) ..	II
	Sekondarnagar U. P.	
38	Md. Golam Hadi (E) ..	I
	Subarnapur U. P.	
41	Karun Baksh Biswas ..	I
43	Abdul Razzak, No. I ..	II
44	Abdul Alim Chowdhury (E) ..	I
45	Abdul Razzak, No. II (E) ..	II
	South Kazipara U. P.	
47	Md. Shafi ..	I
48	Kazi Abu Salek Md. Hossain ..	I
49	Abdul Aziz ..	I
50	Abu Bakar Molla ..	I
51	Isaladdin Laskar ..	I
	Rahanda U. P. Maktab.	
52	Sowkat Ali Mondal ..	I
53	Basarat Ali Mandal ..	I
	Cholepur U. P.	
54	Amir Ali Mullick (E) ..	II
55	Nur Hossain (E) ..	II
56	Abdul Ahid (E) ..	I
57	Golam Mustafa Mudi (E) ..	II

Roll No.	Name.	Division.
	Sadhanpur U. P.	
59	Sheik Altap Hossain (E) ..	I
	Ballavpara F. P.	
60	Md. Amir Ali (E) ..	I
	Dariapur Maktab.	
62	Kazi Md. Mahasin ..	I
	Rampur Board U. P.	
64	Md. Ayub Ali ..	II
66	Sk. Asraf Hossain ..	II
67	Md. Abdul Maunaff Khamar ..	II
69	Md. Ramihaddin ..	II
70	Md. Sarafat Hossain ..	II
	Galasia U. P.	
71	Golam Bari Mandal ..	I
	Chowmuha U. P.	
73	Sk. Atiar Rahman (E) ..	I
	Dadpur U. P.	
76	Ajibar Rahman (E) ..	I
	Diamond Harbour Centre.	
	Donabudha F. P.	
1	Sasankar Sekhar Bhattacharji (E) ..	II
2	Bibhutibhusan Bhumia (E) ..	I
3	Arjun Ch. Bhumia (E) ..	II
4	Kalachand Bhumia (E) ..	I
5	Anath Nath Mandal (E) ..	II
	Chandpala U. P.	
6	Netailal Ghosh (E) ..	I
7	Muralibhusan Sarkar (E) ..	I
	Basudebpur U. P.	
8	Bharat Ch. Ghosh (E) ..	I
	Diamond Harbour Practising U. P.	
9	Panchanan Ganguly (E) ..	II
10	Harakrishna Basu (E) ..	II
11	Niranjan Manna (E) ..	II
	Nurpur Meherali U. P.	
12	Chandrasekhar Banerjee (E) ..	II
13	Bipadbhanjan Panda ..	II
	Malancha U. P.	
14	Basudeb Chakravarti (E) ..	I
15	Sanatan Pramanik ..	I
16	Renukabala Ghosh (E) ..	II
	Sheordah U. P.	
18	Umasashi Chakravarti (E) ..	I
19	Malinabala Bhattacharjee (E) ..	II
20	Amarkrishna Chakravarti (E) ..	II
21	Lalitmohan Chakravarti (E) ..	I
	Chanda U. P.	
22	Kalipada Roy (E) ..	I
23	Nirodebaran Roy (E) ..	I
24	Durgadas Roy (E) ..	I
25	Amulya Bhusan Roy (E) ..	II
26	Panchanan Mukhopadhya (E) ..	I
	Bolsidhi U. P.	
27	Prafullakumar Bhattacharjee (E) ..	II
28	Haripada Ghosh (E) ..	II
29	Mahendranath Ghosh (E) ..	II
30	Prabhatpada Bandyopadhaya (E) ..	I
31	Naliniranjan Mukhopadhaya (E) ..	I

Roll No.	Name.	Division.
	Benipur U. P.	
32	Kesabchandra Pramanik (E)	II
33	Subhas Ch. Bose (E)	II
34	Suprakas Ch. Bose (E)	II
35	Purna Ch. Bhanja (E)	I
36	Kesab Ch. Das (E)	II
	Chowkitala U. P.	
39	Bhusan Ch. Chakravartti	I
40	Jatis Ch. Chakravarti (E)	II
41	Pulinbehari Adhikari (E)	II
	Tararat Sussex Trust U. P.	
42	Malin Ch. Das (E)	II
43	Pramathanath Mukerjee (E)	II
	Garda U. P.	
44	Sadhan Ch. Pramanik (E)	II
	Hotar F. P.	
45	Khagendra Nath Raye (E)	I
	Kuleswar U. P.	
46	Pulin Behari Ghosh	II
	Bejayrampur F. P.	
50	Shyamacharan Ganguly (E)	I
51	Rammohan Ganguly (E)	I
52	Panchanan Biswas (E)	II
53	Kartik Ch. Barik (E)	I
	Guthari U. P.	
53A	Gurupada Sarbadhikari (E)	I
	Bejayrampur F. P.	
54	Amulyadhan Chowdhury (E)	I
55	Ambika Charan Mondal (E)	I
56	Srinibas Ch. Bhandari (E)	I
57	Bejaykrishna Das (E)	I
58	Sasadhar Sardar (E)	I
	Chandpala U. P.	
60	Phanibhushan Mistri (E)	I
	Bhatheria U. P.	
61	Kesab Ch. Kulay (E)	I
	Amodepur Binapani U. P.	
62	Urdhab Ch. Mandal (E)	I
63	Jagatjyo Haldar (E)	I
	Falta U. P.	
64	Jatindranath Mandal (E)	I
65	Pramada Prosad Roy	II
	Guthari U. P.	
66	Duryodhan Kayal (E)	I
	Diamond Harbour Practising.	
67	Sudarsan Ch. Haldar (E)	I
	Sukdevpur U. P.	
68	Sital Ch. Majhi (E)	I
69	Jatindra Nath Mandal (E)	II
70	Biswanath Hazra (E)	II
	Mukundapur U. P.	
71	Pares Nath Mandal (E)	I
72	Pancham Ch. Haldar (E)	I
	Sheordah U. P.	
73	Anadibhusan Singh (E)	I

Roll No.	Name.	Division.
	Malancha U. P.	
74	Bhupal Ch. Haldar (E)	I
	Jangalpara U. P.	
75	Ajitkumar Kayal	I
	Baratia U. P.	
76	Batakrishna Shaoo (E)	I
77	Nanilal Hazra (E)	I
78	Sufal Ch. Das (E)	I
	Boinchberia U. P.	
79	Chintamani Kayal	I
80	Rajeswar Mondal	I
	Chandpala U. P.	
81	Binodebehari Haldar (E)	I
82	Palan Ch. Kayal (E)	I
83	Amulya Ch. Mandal (E)	I
84	Prabhabati Kayal (E)	I
85	Kamalabala Samanta (E)	I
	Basudebpur U. P.	
86	Palan Ch. Mandal (E)	I
87	Kishorimohan Koyal (E)	I
88	Sanatan Modak (E)	I
89	Harekrishna Naskar (E)	I
90	Anadibhsuan Naskar (E)	I
	Pikhira U. P.	
91	Lalitmohan Gharami	I
	Bhatheria U. P.	
92	Kalipada Das (E)	I
94	Banshinath Haldar (E)	I
	Mahirampur-Raghunath U. P.	
96	Amulyapada Nath (E)	I
	Chanda U. P.	
97	Mahim Ch. Mandal (E)	I
98	Gananath Mandal (E)	I
99	Pramathanath Purkait (E)	I
100	Amulya Charan Mondal (E)	II
101	Tarani Charan Mondal (E)	I
	Mahirampur-Raghunath U. P.	
102	Gosthabehari Nath (E)	I
104	Anilkumar Manna (E)	II
105	Gandhikumar Mandal (E)	II
	Falta U. P.	
106	Prafullakumar Mallick (E)	I
107	Nishikanta Majhi	I
109	Sudhansubhusan Mallick	I
110	Mohinimohan Samanta (E)	I
	Guthari U. P.	
111	Lalitmohan Mandal	I
	Diamond Harbour Practising.	
112	Pankajkanta Mandal (E)	I
113	Santoshkumar Naskar (E)	I
114	Bipinbehari Mistri (E)	II
115	Adhir Ch. Haldar (E)	I
116	Jatis Ch. Mandal (E)	I
117	Harisadhan Haldar (E)	I
118	Binodebehari Haldar (E)	I
119	Prohlad Ch. Purkait (E)	II
	Badartala U. P.	
120	Ajitkumar Haldar (E)	I
121	Adaitya Ch. Haldar (E)	I

Roll No.	Name.	Division.
	Nurpur Meherali U. P.	
122	Santosh Ch. Mandal (E) ..	I
	Malancha U. P.	
124	Bhagabati Charan Jana (E) ..	I
	Shordah U. P.	
125	Mukundadas Mandal (E) ..	I
126	Anil Krishna Senapati ..	I
127	Sureswar Samanta (E) ..	I
128	Giridhar Mandal ..	I
	Diamond Harbour Practising.	
129	Khudiram Bhumia (E) ..	I
	Benipur U. P.	
130	Santosh Kumar Paul (E) ..	I
	Bisnupur F. P.	
133	Dhananjay Das (E) ..	I
	Kadipukur U. P.	
135	Harekrishna Baidya (E) ..	I
136	Dijapada Naskar (E) ..	II
137	Kanai Lal Haldar (E) ..	II
	Udaipur U. P.	
138	Satis Ch. Haldar (E) ..	I
139	Sukhamoy Mistri (E) ..	I
	Chowkitala U. P.	
140	Sricharan Sardar (E) ..	II
	Morapai U. P.	
141	Satis Ch. Sardar (E) ..	II
	Tararat S. T.	
143	Suryakumar Mondal (E) ..	I
144	Manikchand Naskar ..	II
145	Ajitkumar Sardar (E) ..	I
146	Renukamohan Patra (E) ..	II
147	Ranjitkumar Naskar (E) ..	II
	Dhanpota U. P.	
148	Makhan Lal Kayal ..	II
149	Manohar Ch. Mandal ..	I
150	Manimohan Naskar (E) ..	I
	Baguncki U. P.	
151	Pulinbehari Purkait ..	I
152	Kishorimohan Mandal ..	I
153	Matilal Mandal (E) ..	I
	Earpur U. P.	
154	Sudhir Ch. Saha ..	II
	Garkhali U. P.	
155	Bama Charan Mandal ..	II
	Dhandhanya U. P.	
156	Rajeswar Bag (E) ..	I
	Rangilabad U. P.	
157	Pitambar Das Souh (E) ..	I
158	Santoshkumar Souh (E) ..	I
	Hotar F. P.	
159	Patitpaban Mandal (E) ..	I
160	Kabil Ch. Haldar (E) ..	I
161	Sushil Kumar Barik (E) ..	I
162	Probhash Ch. Sardar (E) ..	I
163	Matilal Naskar (E) ..	I
164	Jayantakumar Mandal (E) ..	I
165	Niday Ch. Purkait (E) ..	I
166	Prannath Saha (E) ..	I
	Naraharipur U. P.	
167	Dwijapada Mandal (E) ..	I
168	Panchanan Mandal (E). ..	I
170	Bankim Behari Gayen (E) ..	I
171	Nadhir Ch. Santra (E) ..	I
	Bahirgachi U. P.	
172	Harekrishna Haldar (E) ..	II
	Uttarmaheswara U. P.	
173	Manmathanath Kar (E) ..	II
175	Manmohan Jana (E) ..	II
176	Pulinbehari Mandal (E) ..	II
177	Pulinbehari Haldar (E) ..	II
	Lakhikantapur U. P.	
178	Manoranjan Sardar ..	II
179	Bantul Ch. Haldar ..	II
	Morapai U. P.	
182	Joseph Ghosh (E) ..	II
	Baratia U. P.	
186	Ahmad Ali Khansama (E) ..	II
187	Abu Tayeb Molla (E) ..	II
188	Pijiruddin Khansama (E) ..	I
189	Sk. Ebajuddi Molla (E) ..	II
190	Sk. Abu Bakar Molla (E) ..	I
191	Sk. Md. Sultan (E) ..	I
192	Sk. Md. Ali Molla (E) ..	II
193	Sk. Bani Yamin Molla (E) ..	I
	Donabudha F. P.	
194	Awalali Mallik (E) ..	I
	Sheordah U. P.	
195	Md. Daudali Molla (E) ..	I
	Singhberia Moslem Primary.	
196	Md. Abu Safian Gazi ..	I
	Talanda Maktab.	
197	Farhad Ali Shaikh ..	II
	Parjana U. P.	
198	Abdul Wadud Khan (E) ..	II
199	Shah Alam Khan (E) ..	II
	Nurpur Meherali U. P.	
200	Md. Akhtarali Sk. ..	II
	Durgapur Maktab.	
201	Md. Rawshan Ali Sk. ..	I
202	Md. Rostamali Sk. ..	I
	Bolsiddhi U. P.	
203	Md. Khademali Paik (E) ..	I
	Parulia U. P.	
204	Neamatali Raj (E) ..	I
205	Abu Bakar Molla (E) ..	I
206	Kobad Ali Molla (E) ..	II

Roll No.	Name.	Division.
	Nurpur Meherali U. P.	
207	Yakub Ali Sheikh (E)	I
208	Sk. Majifar Rahman (E)	I
	Morapai U. P.	
209	Mobarak Naskar (E)	I
210	Abdur Rauf Shaikh (E)	I
	Gardah U. P.	
212	Sultan Ali Khan (E)	II
	Earpur U. P.	
216	Md. Arif Baidya (E)	II
217	Md. Darashtulla Sardar (E)	I
218	Md. Haydar Ali Mir (E)	II
	Gorkhali U. P.	
219	Md. Omar Ali (E)	I
220	Md. Yakub Ali (E)	I
	Mollarchak U. P.	
221	Hasam Ali Sk.	II
	Narharipur U. P.	
222	Sk. Mowla Buksh (E)	II
	Barijpur U. P.	
224	Md. Abdul Jabbar Naskar (E)	I
225	Md. Jillarali Haldar	I
226	Md. Tobarakali Gazi	II
227	Md. Rahim Bux Haldar	I
228	Masammat Ayesha Khatun Bibi	I
	Nainan U. P.	
230	Abdul Kahar Mallic (E)	II
	Kalash U. P.	
233	Aziz Rahman Molla (E)	II
	Bejayranpur U. P.	
237	Karim Ali Beg (E)	I
238	Jahangir Ali Molla (E)	I
239	Abul Kasem Ali (E)	I
240	Nasim Ali Safui (E)	I
	Kulpi Centre.	
	Bhairolinagar U. P.	
1	Jyotish Ch. Chakravarti	II
	Bidyadharpur U. P.	
2	Dulal Chandra Ghosh (E)	II
	Simulberia U. P.	
3	Nirapado Panda	II
	Panchanan U. P.	
4	Charu Chandra Banerjee	I
	Bhubannagore U. P.	
6	Sarbbeswar Das	I
	Kashiabad U. P.	
7	Profulla Kumar Dandapat (E)	I
8	Birnarayan Panda	II
	Lot 5, Anandanagar U. P.	
9	Badal Chandra Banerjee (E)	II
	Ramkrishnapur U. P.	
10	Prafulla Kumar Adhikari	I
	Rangafala U. P.	
11	Satis Ch. Pramanik (E)	I
	Kulpi Practising.	
12	Kalipado Pramanik (E)	I
13	Haran Ch. Pramanik	I
14	Pulin Bihari Pramanik	I
	Chak Subadhi K.M. U. P.	
15	Nepal Chandra Ghosh (E)	I
16	Manik Chandra Ghosh (E)	I
17	Hari Mohan Ghosh (E)	I
	Ramnagore U. P.	
18	Sudhansu Bhusan Deb Sarma	I
	Gazirmal U. P.	
19	Khagendra Nath Manna (E)	II
	Rajrajeswarpur U. P.	
20	Bankim Behari Das (E)	II
	Udoyrampur Circle U. P.	
21	Bejoy Krishna Ghosh	II
	Kedoram Chandrapur U. P.	
23	Haripada Bhandari (E)	I
24	Nepal Chandra Mandal (E)	I
	Bhairobinagar U. P.	
25	Joygopal Manna (E)	I
26	Purna Chandra Haldor (E)	I
27	Abhimanya Ghorai (E)	I
28	Bholanath Mallik Barman (E)	II
	Ghoramaramandirtola U. P.	
29	Kalipodo Halder (E)	I
30	Bankim Chandra Porai (E)	II
	Chandipur U. P.	
31	Satish Ch. Halder (E)	II
32	Amoy Krishna Jatna	I
	Bidyadharpur U. P.	
34	Hira Lal Halder (E)	I
	Sibnagar U. P.	
35	Adhir Chandra Halder	I
36	Ananga Mohan Halder	I
	Barberia U. P.	
38	Mihir Chandra Bag (E)	II
39	Protap Singha Kawra (E)	II
40	Rabindra Nath Kawra (E)	II
41	Dhiraj Chandra Sana (E)	II
	Lot 8, Kashinagor U. P.	
42	Sadchidananda Mandal (E)	I
43	Ajit Kumar Nayak	I
44	Satish Chandra Halder (E)	I
45	Nalini Kanta Jana (E)	I
46	Rampado Jana	II
47	Panch Kari Pal (E)	II
	Shyambasur Chak U. P.	
48	Dhirendra Nath Mandal	I
49	Jitendra Nath Mandal	II
50	Hiranmaya Naskar	II

Roll No.	Name.	Division.
	Udyarampur Paikpara U. P.	
51	Anukul Chandra Sorder	II
52	Sudhanya Charan Haldar	II
53	Amulya Ratan Halder	I
54	Chandra Kanta Halder	II
55	Dhirendra Nath Halder	I
56	Binoy Krishna Paik	I
	Bansberia Free U. P.	
57	Kumud Ranjan Halder (E)	I
58	Modhusudan Purkait (E)	I
59	Moni Mohan Moyra (E)	I
60	Maharaj Chandra Naiya (E)	I
	Simulberia U. P.	
62	Amarendra Nath Ghorami	II
63	Bankim Chandra Midya	II
	Panchnan U. P.	
64	Anukul Chandra Naskar	I
65	Goyaram Paik	I
66	Haran Chandra Mondal	I
67	Amulya Krishna Naskar	II
68	Annada Charan Koyal	I
69	Sasanka Shekhar Roy Naskar	I
70	Amrita Lal Halder	I
71	Satish Chandra Naskar	II
72	Nishi Kanta Mondal	II
73	Sudhir Chandra Mondal	I
74	Profulla Krishna Boidya	II
75	Nishi Kanta Purkait	I
76	Sasanka Shekhar Das	I
	Ashapur U. P.	
77	Jyotirmoy Halder	II
78	Prahlad Chandra Halder	I
	Bonmasid U. P.	
80	Khudiram Halder	I
	Nayerhat U. P.	
82	Kalipada Halder	I
83	Joy Hari Naiya	II
	Raghunathpur U. P.	
84	Kritibas Gayen	I
85	Nirmal Chandra Halder	I
86	Bhuban Mohan Naskar	I
87	Nishi Kanta Naskar	I
88	Kartik Chandra Naskar	I
89	Binodo Behari Biswas	I
	Sukdebpur U. P.	
90	Bancharam Halder	I
91	Jyotish Chandra Boidya	I
92	Chinmoya Sorder	I
93	Kamini Kanta Naskar	II
	Banamalipur U. P.	
94	Chand Ratan Halder (E)	I
95	Ranga Lal Halder (E)	I
96	Ashutish Halder (E)	I
97	Santosh Kumar Purkait (E)	I
98	Surjya Kanta Middya (E)	I
	Santoshpur U. P.	
99	Sudhir Kumar Gayen	I
100	Palan Chandra Halder	I
	Bhubannagore U. P.	
101	Murari Mohan Das	I

Roll No.	Name.	Division.
	Kasiabad U. P.	
102	Profulla Kumar Bhuniya (E)	I
103	Ananta Kumar Patra (E)	I
104	Bono Bihari Paul (E)	I
	Ramkrishnapur U. P.	
108	Provash Chandra Bera	I
	Rangafala U. P.	
109	Rati Kanta Dalue (E)	I
110	Birendra Nath Pramanik (E)	I
	Kakdwip U. P.	
111	Dinesh Chandra Das (E)	I
112	Ajit Kumar Das (E)	I
	Kulpi Practising U. P.	
113	Kasi Bhusan Halder (E)	I
114	Baija Bhusan Kayal (E)	I
115	Bibhuti Bhusan Halder (E)	I
116	Pramatha Ch. Purkait (E)	I
	Rajarampur Free.	
117	Manash Mohan Mandal (E)	I
118	Satish Chandra Purkait (E)	I
119	Jitendra Nath Sanpui (E)	I
120	Chuni Lal Naiya	I
121	Pravash Chandra Choudhury	I
122	Khudiram Das (E)	I
123	Kali Krishna Gayen (E)	I
124	Birendra Nath Halder	I
	Iswaripur U. P.	
125	Prabodh Krishna Purkait	II
126	Dhirendra Nath Halder	II
	Baburmal U. P.	
127	Pashupathi Nath Majhi (E)	I
128	Pulin Chandra Halder (E)	I
129	Satish Chandra Hati (E)	I
	Chak Subudhi K. M. U. P.	
130	Nishi Kanta Halder (E)	I
131	Sudhir Chandra Mandal (E)	I
132	Sachindra Nath Naiya (E)	I
133	Sudhansu Bhusan Halder (E)	I
	Hatirampur U. P.	
134	Atul Chandra Haldor (E)	I
135	Satish Chandra Halder (E)	I
136	Bankim Behari Mistri (E)	II
	Ramnagore U. P.	
137	Sudhir Chandra Mandal	II
138	Bibhuti Bhusan Mandal	I
139	Kalipada Halder	I
140	Naba Kishore Halder	I
	Gazirmal U. P.	
141	Satis Ch. Baidya (E)	II
142	Hrishikesh Mandal (E)	I
143	Sreebash Pramanik (E)	II
144	Monoranjan Bhandari (E)	I
145	Jogendra Nath Mistri (E)	II
146	Ajit Kumar Mistri (E)	II
	Triloke Chandrapur U. P.	
147	Haripada Parua	I
148	Abinash Jana	II
149	Mohadeb Jana	II
150	Pulin Behari Santra	II
151	Amulya Ch. Khanra	I
152	Sri Hari Baital	I
	Golakpur U. P.	
154	Sudhir Chandra Jana	II

Roll No.	Name.	Division.
	Natendrapur U. P.	
155	Jiban Krishna Jana (E)	II
157	Nirmal Kumar Patra	II
	Baidyapur U. P.	
159	Sadhan Das Baidya (E)	I
160	Saurendra Kumar Mandal (E)	I
161	Ujjwala Pado Bena (E)	I
	Dwarikanagar U. P.	
162	Suresh Chandra Bera (E)	I
163	Tarani Kumar Tanti	I
164	Dhirendra Nath Jana	I
	Jamtola U. P.	
165	Provash Ch. Bijali Barman (E)	I
166	Manyapada Bag	I
	Rajaramghat U. P.	
167	Sudhanya Charan Naskar	I
168	Hira Lal Halder	II
169	Hare Krishna Naskar	I
	Nakali Moyrapore U. P.	
170	Sitalpado Purkait	I
171	Nakuleswar Moyra	I
172	Girish Chandra Moyra	I
173	Pulin Behari Moyra	I
174	Jitendra Nath Halder	I
175	Jyotirmoy Moyra	I
	Manmathapur U. P.	
176	Bhaba Taran Das	II
	Gangadharpur U. P.	
177	Prafulla Kumar Giri	II
178	Sarat Chandra Maity	I
	Mithakundoo U. P.	
179	Satish Chandra Halder	II
180	Rash Behari Kalapahar	I
	Rajrajeswarpur U. P.	
181	Binode Behari Maity (E)	I
182	Suresh Chandra Bera (E)	I
	Sibpur U. P.	
183	Jagadish Chandra Jana	I
	Muraripur U. P.	
188	Aswini Kumar Baidya	I
189	Jatindra Kumar Haldar	I
190	Kartic Chandra Haldar (E)	I
191	Bansari Mohan Haldar	I
	Maleya U. P.	
192	Shudhanna Kumar Haldar (E)	I
193	Manmatha Nath Rai Saddar (E)	I
194	Shashadhar Mandal (E)	I
195	Bhupati Chandra Mandal	I
	Harindanga U. P.	
196	Shubal Chandra Purkait (E)	I
197	Amulya Charan Bhandari (E)	II
198	Shudhanshu Bhusan Halder (E)	I
	Jadabpur A. K. U. P.	
200	Nil Kanta Biswas	I

Roll No.	Name.	Division.
	Chandpur U. P.	
201	Pashupati Sardar (E)	I
202	Jogojjoti Haldar (E)	I
203	Nagendra Nath Sardar (E)	I
	Ramkarchar Khashmahal No. 3 U. P.	
203(a)	Nanigopal Guchhait (E)	I
203(b)	Sudhirchandra Bijuli (E)	I
203(c)	Jyotindra Hajra (E)	I
	Ghoramara Mandirtola U. P.	
204	Jasuruddin Khan (E)	I
	Chandipur U. P.	
205	Md. Sekandar Ali Gazi	I
	Bidyadharpur U. P.	
206	Md. Sayed Ali Saha (E)	I
	Shyambasur Chak U. P.	
207	Md. Zoynal Abedin Mallik	I
208	Md. Dulal Ali Molla	I
	Udayrampur Paikpara U. P.	
209	Md. Lakman Mallik	I
	Simulberia U. P.	
210	Md. Kader Baksha Mir	I
211	Noor Mohammad Naiya	I
	Lot 5, Anandanagar U. P.	
212	Md. Kasem Ali Shaikh (E)	I
213	Md. Sarafat Ali Shaikh (E)	I
	Enayetpur Maktab.	
214	Md. Sahajahan	I
215	Noor Mohammad	I
216	Md. Sekender	I
	Rajarampur Free.	
217	Shaikh Afsar Ali (E)	I
218	Md. Nasim Ali Purkait	I
219	Md. Dud Ali Laskar (E)	I
220	Md. Daulat Ali Gharami	I
221	Md. Madar Baksha Mir	II
222	Md. Anwar Ali Halder (E)	II
223	Md. Toyebar Rahaman Halder (E)	II
224	Md. Tarhan Ali Gazi	II
	Udayrampur Circle U. P.	
227	Md. Azim Ali Khan	I
	Madarpara Board U. P.	
228	Ershad Ali Shaha	I
229	Maktel Hossain Paik	I
	Mathurapore H. E. School Centre.	
	Digambarpur U. P.	
1	Sarat Chandra Misra (E)	I
	Sitagachi Mandal U. P.	
2	Satish Chandra Pramanik (E)	I
	Bhagabatipur Ramjibanpur U. P.	
3	Niranjan Chakraverty (E)	II
4	Kanan Kumar Chakraverty (E)	II
	Pakurtala U. P.	
5	Bipin Behari Mukherjee	II

Roll No.	Name.	Division.
	Tajpur U. P.	
6	Benoy Krishna Pramanik (E) ..	I
	Joynagore Practising U. P.	
7	Satyahari Banerjee (E) ..	II
	Bangaberia U. P.	
8A	Abani Bhusan Bhattachrjee ..	I
	Krishnachandrapur U. P.	
9	Nakul Chandra Nandi ..	II
	Tajpur U. P.	
10	Bishnupada Halder (E) ..	I
11	Sudhanya Bhusan Halder (E) ..	II
12	Dhaneswar Roy (E) ..	I
13	Bidhu Bhusan Mandal (E) ..	II
	Panapukur U. P.	
14	Dulalpado Naskar ..	II
16	Birendra Nath Halder (E) ..	II
	Ranaghata Free Primary.	
17	Chuni Lal Gayen (E) ..	I
	Kharikharapara U. P.	
18	Kalipado Halder (E) ..	I
19	Satya Narayan Kayal (E) ..	I
20	Kamal Krishna Sanpui (E) ..	II
21	Dhirendra Nath Sanpui (E) ..	I
22	Bidhu Bhusan Halder (E) ..	I
	Bahalberia U. P.	
23	Brindaban Chandra Halder ..	II
24	Sudarsan Chandra Gayen ..	I
	Raidighi U. P.	
26	Dhurjati Charan Chowdhury (E) ..	I
	Ramnagar U. P.	
28	Bhuban Mohan Choulia ..	I
29	Rampada Maity (E) ..	I
	Digambarpur U. P.	
31	Jnanendra Kumar Nath (E) ..	II
	Nabinchandrapur U. P.	
32	Hrishikesh Mandal ..	I
33	Srihari Koyal ..	II
34	Megnad Sardar ..	II
	Chapla U. P.	
35	Manik Chand Purkait (E) ..	I
	Sitagachi U. P.	
36	Phani Bhusan Bhandari (E) ..	II
37	Arabinda Prasad Bhandari (E) ..	I
38	Satya Prasad Halder (E) ..	I
39	Bhujanga Bhusan Mandal (E) ..	I
	Chandpasa Free Primary.	
40	Janjit Lal Halder (E) ..	I
	Bhagabatipur Ramjibanpur U. P.	
41	Shanjay Lal Gayen (E) ..	I
42	Rajani Kanta Shakheri (E) ..	I
43	Nanda Lal Koyal (E) ..	I
44	Sailendra Nath Koyal ..	I
45	Rabi Bhusan Halder (E) ..	I
46	Krishnadhan Halder ..	II

Roll No.	Name.	Division.
	Bhajna Beniapara U. P.	
47	Murari Mohan Middey (E) ..	I
	Radhakrishnanagar U. P.	
49	Jiban Krishna Mal (E) ..	I
	Pakurtala U. P.	
50	Nirapado Mistri ..	I
51	Bijay Krishna Mistri ..	I
	Gilarchat Board U. P.	
52	Niranjan Naskar (E) ..	I
53	Manmatha Nath Das (E) ..	I
54	Amulya Krishna Naiya (E) ..	II
55	Satya Charan Sardar (E) ..	I
	Srikrishnanagore U. P.	
56	Radharaman Gharoi ..	I
57	Jitendra Nath Mandal ..	I
	Krishnachandrapur U. P.	
58	Bijoy Krishna Mandal (E) ..	I
59	Patit Paban Halder (E) ..	I
	Raipur Lot 18, U. P. No. 3.	
60	Phani Bhusan Halder ..	I
	Rajrajeswarpur No. I U. P.	
62	Surendra Nath Kapilash (E) ..	II
63	Hemanta Kumar Barui (E) ..	II
	Rajrajeswarpur No. 2 U. P.	
65	Mahadeb Mula ..	II
66	Gadadhar Adak ..	II
	Khari Mandalpara U. P.	
67	Shibram Majhi (E) ..	I
68	Dhurjhati Bhusan Halder ..	II
69	Mahanando Purkait ..	I
70	Kasi Nath Mandal ..	II
	Tulsighata Free Primary.	
71	Madhai Chandra Halder (E) ..	I
	Taengrabichi U. P.	
72	Rati Kanta Naskar ..	II
	Joynagar Practising U. P.	
76	Sahadeb Mandal (E) ..	I
77	Santosh Kumar Koyal (E) ..	II
	Belia Durganagar U. P.	
78	Abhoy Charan Halder (E) ..	I
	Mariswar U. P.	
79	Gopal Chandra Halder (E) ..	I
80	Gandhipado Roy (E) ..	I
	Pakhirala U. P.	
81	Hiralal Sardar (E) ..	I
	Tulsighata Free Primary.	
82	Nilkantha Koyal (E) ..	I
83	Harendra Nath Das (E) ..	I
84	Mohini Mohan Halder (E) ..	I
85	Ratneswar Mandal (E) ..	II
86	Kundadhan Mandal (E) ..	I
87	Ananta Kumar Mandal (E) ..	II
	Nalgorahat U. P.	
88	Palan Chandra Baidya (E) ..	I

Roll No.	Name.	Division.
	Tulsighata Free Primary.	
89	Sudhir Chandra Mandal (E)	I
90	Nakuleswar Samanta (E)	I
	Joynagar Practising U. P.	
91	Kanai Lal Das (E)	II
	Manirtat Garh U. P.	
92	Manik Chandra Bhandari (E)	I
	Nimpit U. P.	
93	Girindra Nath Das (E)	II
	Bangaberia U. P.	
93A	Usha Charan Halder	I
	Bazarberiahat U. P.	
93B	Surja Kanta Halder (E)	II
	Panapukur U. P.	
93C	Nil Ratan Halder (E)	II
93D	Birendra Kumar Halder (E)	II
93E	Ram Prosad Halder (E)	II
93F	Dakshina Ranjan Mondal (E)	I
93G	Adhir Chandra Halder	II
	Lalpur U. P.	
94	Md. Sarwarjahan Gazi (E)	II
95	Md. Abdus Soyan Khan (E)	I
96	Md. Jahan Ali Molla	I
97	Md. Akram Ali Molla (E)	II
	Panapukur U. P.	
98	Md. Yakub Ali Mir	I
	Karalirchak U. P.	
99	Md. Arjed Ali Baidya (E)	I
	Chandpasa Free Primary.	
100	Md. Abdur Rahman Gazi (E)	I
101	Md. Abdul Khaleque Gazi (E)	
	Ranaghata Free Primary.	
102	Mosleyuddin Halder	II
	Manirtat Garh U. P.	
103	Samsul Alam Khan	II
	Manirtat U. P.	
104	Ajed Ali Molla	I
105	Samsuddin Gayen	II
	Marygunge U. P. Maktab.	
106	Md. Ersad Ali (E)	I
	Tulsighata Free Primary.	
108	Ambar Ali Peada (E)	I
	Tangrabichi U. P.	
110	Manik Peada	II
	Bazarberiahat U. P.	
111	Surat Ali Sardar (E)	I

Roll No.	Name.	Division.
	Basirhat Centre.	
	Bhalba F. P.	
1	Amarnath Mitra (E)	I
2	Kamal Krishna Mitra (E)	I
3	Akinchan Kumar Mitra (E)	I
	Pifa U. P.	
4	Bhudhar Chandra Basu (E)	I
5	Haranchandra Bandyopadhyaya(E)	II
	Dhanyakuria R. K. U. P.	
6	Dinesh Chandra Biswas(E)	I
7	Jasada Dulal Biswas (E)	I
8	Balaidas Sawoo (E)	II
	Bhowanipur Harimohan U. P.	
10	Kumari Renukabala Mondal (E)	I
11	Santosh Kumar Gain (E)	I
12	Bamandas Mondal	I
13	Atul Ch. Mondal (E)	I
14	Kartic Chandra Gain (E)	I
	Keotsha F. P.	
15	Bhagirath Chakravarti (E)	I
	Dattapara U. P.	
16	Sibnath Karmakar (E)	II
	Gokulpur U. P.	
17	Ratikanta Chatterjee (E)	II
18	Bimalakanta Chatterjee (E)	I
19	Jyotish Chandra Ghosh (E)	I
	Taragunia U. P.	
20	Subodchandra Sinha (E)	I
21	Ramdhan Basu (E)	II
	Rajnagore J. G. U. P.	
24	Rakhal Chandra Mondal (E)	I
	Sainpala U. P.	
25	Sarat Chandra Dey (E)	I
26	Amiyakumar Ghosh (E)	I
27	Suhash Chandra Sarkar (E)	I
28	Subhash Chandra Mitra (E)	I
	Iswarigachha Practising U. P.	
30	Hrishikesh Chowdhury (E)	I
	Aturia U. P.	
31	Bibhuti Bhusan Dey (E)	I
32	Monimohan Mitra (E)	II
33	Narendranath Ghosh (E)	I
34	Sudhir Chandra Karmakar (E)	I
	Sikra Jubilee U. P.	
35	Sushil Kumar Banerjee (E)	I
36	Kalachand Ghosh (E)	II
	Ramnarainpur U. P.	
38	Subodhkumar Mukherjee (E)	I
39	Krishna Behari Chatterjee	II
40	Nirendranath Mondal (E)	II
	Basirhat Practising U. P.	
41	Ramkrishna Pathak (E)	I
42	Sibapada Ghosh (E)	I
	Baduria Bani U. P.	
43	Anathbandhu Banerjee (E)	I

Roll No.	Name.	Division.
	Dhaltitha U. P.	
46	Sudhir Kumar Mukherjee (E)	.. I
47	Haranchandra Bhattacharjee (E)	.. I
	Bajitpur U. P.	
48	Anilkumar Chakravarti	.. II
49	Jagannath Acharjee	.. II
	Harishpur U. P.	
50	Ramendranath Chowdhury (E)	.. I
51	Basantakumar Bairagi (E)	.. I
52	Maniklal Bairagi (E)	.. I
53	Charandas Mondal (E)	.. I
54	Santosh Kumar Sardar	.. II
55	Santiram Ghosal	.. II
	Pifa U. P.	
57	Krishnadulal Saha (E)	.. I
58	Ramdulal Saha (E)	.. I
	Polta Union U. P.	
61	Rampada Mullick (E)	.. I
	Taragunia U. P.	
62	Monimohan Sardar (E)	.. I
	Kenkrasuti U. P.	
64	Birendrakumar Mullick (E)	.. II
	Bara Bankra U. P.	
65	Bholanath Bairagi (E)	.. II
	Sainpala U. P.	
67	Dole Behari Biswas (E)	.. I
	Iswarigachha Practising U. P.	
68	Sibnath Das (E)	.. I
	Aturia U. P.	
69	Nanigopal Das (E)	.. I
	Ramnarainpur U. P.	
70	Prafullakumar Gain (E)	.. I
71	Srinibash Ch. Gain	.. II
	Sarupnagar U. P.	
72	Thakurdas Kha (E)	.. I
73	Sachindra Nath Sardar (E)	.. II
	Balti Boyerghata Khasmahal U. P.	
74	Surendranath Sarkar (E)	.. I

Roll No.	Name.	Division.
	Aturia U. P.	
75	Purna Sashi Das (E)	.. I
	Goalbathan U. P.	
77	Kartic Ch. Sardar	.. II
	Basirhat Practising U. P.	
79	Bidhubhusan Haldar (E)	.. I
80	Sudhir Kumar Paul	.. II
81	Udaykrishna Biswas (E)	.. I
	Sashina Gokna U. P.	
82	Kalikumar Haldar	.. II
	Dhaltitha U. P.	
84	Madhusudan Ann (E)	.. I
85	Nitaicharan Daw (E)	.. I
86	Prafullakumar Hari (E)	.. I
87	Khagendranath Das (E)	.. I
	Sayestanagar U. P.	
88	Harendranath Pal	.. II
	Peara Gandharbapur U. P.	
89	Gopal Chandra Das (E)	.. I
90	Probhatkumar Das (E)	.. I
91	Binapani Dassi (E)	.. I
	Harishpur U. P.	
92	Bhutnath Biswas (E)	.. I
93	Ajitkumar Kundu (E)	.. I
94	Saratkumar Datta	.. II
95	Atulkrishna Mandal (E)	.. II
	Bhabanipur Harimohan U. P.	
96	Md. Abbas Gazi (E)	.. I
	Keoteha F. P.	
97	Md. Mujibar Rahman (E)	.. I
98	Md. Sahidar Rahman (E)	.. I
99	Md. Safiuddin (E)	.. I
100	Md. Mahiuddin	.. II
101	Md. Rahamat Ali (E)	.. I
	Dattapara U. P.	
102	Kazi Golam Kibria	.. II
	Syedkati U. P.	
103	Md. Ensan Ali (E)	.. I
104	Md. Samsel Huq	.. II
105	Md. Bakhor Ali (E)	.. II
	Govindapur U. P.	
106	Md. Golam Hossein (E)	.. I
107	Md. Yusuf Ali	.. II
	Gokulpur U. P.	
108	Abdus Sattar	.. I

Roll No.	Name.	Division.
	Palta Union U. P.	
109	Md. Abdul Karim ..	II
111	Md. Meftauddin ..	II
	Chitaru U. P.	
112	Md. Abdul Aziz (E) ..	I
	Baduria Boys' Maktab.	
113	Atiar Rahman ..	II
114	Mujibar Rahman (E) ..	I
	Konkrasuti U. P.	
115	Mehedi Ali ..	I
	Bara Bankra U. P.	
116	Rajabali ..	II
	Rajanagar J. G. U. P.	
118	Majed Ali (E) ..	II
	Sainpala U. P.	
119	Sheikh Golam Rahman (E) ..	I
	Iswargachha Practising U. P.	
120	Arsad Ali (E) ..	I
	Beliadanga U. P.	
122	Ahmed Saidul Gazi (E) ..	II
	Ramnarainpur U. P.	
124	Abdur Rashid (E) ..	II
	Balti Bayerghata U. P.	
126	Khondkar Mohsi (E) ..	II
	Dandirhat U. P. Maktab.	
127	Eshahaque ..	I
	Katia U. P.	
128	Md. Emamuddin ..	I
129	Md. Islam (E) ..	I
130	Md. Bodiyozzaman (E) ..	I
131	Sk. Abdul Majed (E) ..	II
132	Kazi A. T. Md. Abdul Kader (E) ..	II
133	Md. Naziruddin (E) ..	II
	Goalbathan U. P.	
135	Panaulla Sardar ..	II
	Basirhat Practising U. P.	
137	Safia Nessa Khatun (E) ..	I
138	Sk. Hasan Mortaza ..	II
139	Sk. Md. Easin (E) ..	I
140	Md. Saharali Kariker (E) ..	I

Roll No.	Name.	Division.
	Ghorarash U. P.	
141	Md. Asraf Ali (E) ..	II
	Boyerghatta Khasmahal U. P.	
142	Badal Sardar (E) ..	II
	Sayestanagar U. P.	
144	Mowla Buksh Sardar (E) ..	I
146	Panaulla Sardar (E) ..	I
	Taki Government H. E. School Centre.	
	Thuba Bibekananda U. P.	
1	Gurudas Sen (E) ..	I
2	Anilkumar Das (E) ..	I
3	Sankari Krishna Mukerjee (E) ..	I
4	Panchanan Roy (E) ..	I
5	Krishnadhan Chakravarti (E) ..	I
	Jalalpur Vivekananda U. P.	
6	Kanak Kumar Dutt (E) ..	I
7	Gangesh Pramanik (E) ..	I
	Taki Radhamadhab U. P.	
8	Sachinandan Biswas (E) ..	I
	Kumarjole F. P.	
9	Govindadeb Sarkar (E) ..	I
10	Anilkumar Dutt (E) ..	I
	Barunhat F. P.	
11	Taraknath Karmakar ..	II
	Kachurhula U. P.	
12	Krishnakumar Mukerjee (E) ..	I
	Makhalgachha U. P.	
13	Atulkrishna Das ..	II
	Harikati U. P.	
14	Kanailal Pramanik ..	II
	Thuba Bibekananda U. P.	
16	Radhapada Mondal (E) ..	I
17	Ashutosh Das (E) ..	I
18	Satis Ch. Das (E) ..	I
19	Harendranath Das (E) ..	I
	Taki Radhamadhab U. P.	
20	Bijonbehari Nath (E) ..	I
21	Jitendranath Das (E) ..	I
	Barunhat F. P.	
22	Anukulchandra Nath (E) ..	I
23	Ajitkumar Nath (E) ..	I
25	Bisweswar Das ..	II
27	Harendra Nath Pal (E) ..	I
28	Sukumar Laskar ..	I
29	Bhudeb Ch. Haldar (E) ..	I

Roll No.	Name.	Division.
	Sridharkati U. P.	
30	Anantakumar Mondal (E)	I
31	Srikrishna Mondal (E)	I
32	Sivapada Mondal (E)	I
33	Binod Behari Mondal (E)	II
34	Bishnupada Raptan (E)	I
	Ketarchak U. P.	
35	Nityananda Mondal	II
	Bishpur U. P.	
39	Ajitkumar Jana (E)	II
40	Suryakanta Karon (E)	I
	Kachurhula U. P.	
42	Anantakumar Mohata (E)	II
	Chaital U. P.	
43	Bejoy Bhusan Patra	I
44	Khagendranath Mohata	I
46	Subal Ch. Mondal	II
	Amlani U. P.	
48	Arjun Ch. Das (E)	II
	Gopalpur U. P.	
50	Hemendranath Saha (E)	I
52	Murarimohan Sundial (E)	II
	Makalgacha U. P.	
55	Bhabendranath Mondal	II
	Govindakati U. P.	
56	Banamali Mondal (E)	II
57	Panchanan Mondal (E)	I
58	Atal Krishna Mondal (E)	I
59	Umacharan Mondal (E)	II
	Bhabanipur U. P.	
61	Satis Ch. Bir	I
	Rampura U. P.	
62	Abanimohan Naskar (E)	II
	Atapur U. P.	
63	Satis Ch. Duyari (E)	I
64	Nabakumar Mahata (E)	I
65	Kripasindhu Das (E)	I
66	Rajendranath Patra (E)	I
67	Hiralal Pal (E)	I
	Rampur U. P.	
68	Bhusan Ch. Das (E)	I
69	Lalmohan Das (E)	II
	Khanpukuria U. P.	
71	Patit Paban Houli	II
72	Umakanta Baidya	II

Roll No.	Name.	Division.
	Hasnabad F. P.	
74	Kalidas Haldar (E)	I
75	Dayal Hari Haldar (E)	I
76	Phanibhusan Das (E)	II
77	Anilkumar Kahar (E)	I
	Charalkhali F. P.	
79	Atul Krishna Mondal (E)	II
	Sundelbill U. P.	
80	Amulya Ratan Mondal (E)	I
	Ketarchak U. P.	
81	Radhakrishna Barman	II
82	Tarapada Joddar	II
	Thuba Bibekananda U. P.	
85	Abdul Karim (E)	I
86	Matiar Rahman (E)	I
87	Majibar Rahman (E)	I
	Kumarjole F. P.	
88	Liasal Huq Molla (E)	I
90	Samsul Huq Choudhury	I
91	Nur Ahmed Chowdhury	I
	Baruuhat F. P.	
92	Md. Bastulla	I
93	Md. Sahar Ali (E)	I
94	Md. Derastulla	I
	Chaital U. P.	
95	Atiar Rahman Molla	II
	Amlani U. P.	
96	Awlad Ali Gazi (E)	II
	Bhabanipur U. P.	
98	Din Muhammad (E)	I
99	Md. Sonaulla (E)	II
100	Abdul Hamid	I
	Rampura U. P.	
101	Sahidulla Akunji (E)	I
	Harikati U. P.	
102	Nurul Islam (E)	I
103	Farsod Ali (E)	I
104	Fazlur Rahman (E)	II
105	Serahol Huq (E)	II
	Hemnagar U. P.	
106	Sakimuddin Barkandas	I
107	Arozulla Gazi	II
108	Mafaruddin Gazi	I

K. AHMAD,
Inspector of Schools.

List of candidates declared to have passed the Primary (Maktab) Final Examination, 1934, Rajshahi Division.

[Candidates marked with "E" has passed in English (optional).]

FIRST DIVISION.

(In order of merit.)

Rajshahi District.

Rajshahi Centre.

1 Abdur Rajjak (E), Sonaikandi Board Primary.
2 Md. Afsarali Sarker (E), Mashkatadighi Maktab.
3 Fahimuddin, Pirijpur Board Primary.
4 Azizul Haque (E), Rajshahi G. T. Practising Primary.
Mozaffar Hossain, Pirijpur Board Primary.
6 Abbas Ali Sarker (E), Sadopara Maktab.
7 Gour Chandra Mahato (E), Khetor Road Primary.
8 Sachindra Nath Mandal (E), Dashmari Board Primary.
Gopal Chandra Dutta (E), Joypur Free Primary.
10 Chand Mahmmad Dewan, Saipara Model Maktab.
11 Md. Jalaluddin (E), Rajshahi G. T. Practising Primary.
12 Manindra Nath Karmaker, Joypur Free Primary.
13 Boyezuddin Mian, Atanarayanpur Board Primary.
14 Kobbadali Mandal, Gahamahona Maktab.
15 Md. Jabedali (E), Khetur Road U. P.
16 Baharuddin Pramanik, Mosmoil Board Primary.
17 Tasiruddin, Gandagohali Maktab.
Moezuddin Shaik, Bhatkhali Maktab.
19 Najiruddin Munshi, Pananagar Board Primary.
20 Abiruddin Mridha, Chaipara Board Primary.
21 Parshuram Surker, Dashmari Board Primary.
22 Abdul Wahed Mandal (E), Mashkatadighi Maktab.
23 Shahebali Pramanik (E), Behanali Maktab.
24 Jitendra Nath Sarker (E), Dashmari Board Primary.
25 Asimuddin Paik (E), Chaipara Board Primary.
26 Mathi Biswas (E), Sonaikandi Board Primary.
Nur Mahmmad Biswas (E), Mirganj Board Primary.
28 Bangendu Bhusan Panja, Joypur Free Primary.
29 Rafatullah Mandal, Atanarayanpur Board Primary.
30 Sonaullah Mandal, Syampur Maktab.
31 Kutubuddin Sarker (E), Mayepara U. P.
32 Abdul Ali Mollah (E), Mahanganj U. P.
33 Jahiruddin Pramanik, Domdoma U. P.
Ahmedali Mandal, Saipara Model Maktab.
35 Faratullah Bagra (E), Domdoma U. P.
Uma Kanta Sarkar (E), Rajshahi G. T. Practising Primary.
Prosanna Chandra Das, Hatmadhnagar Board Primary.
38 Siddique Ahmed Biswas (E), Hatnabad Board Primary.
Rakhal Mahato (E), Pachandhar Maktab.
Baidya Nath Ray, Kharijagati Board Primary.
41 Bishtupada Saha, Baya Board Primary.
Md. Sefatullah (E), Bagshara Board Primary.
43 Badaruddin Mandal, Mahanganj U. P.
44 Abdul Jalil Mandal, Gahamabona Maktab.
45 Ahmedali Mandal, Hatmadhnagar Board Primary.
46 Bama Charan Sarnaker, Rajshahi G. T. Practising Primary.
47 Sonaullah Pramanik, Sonadanga Board Primary.
48 Sulaiman Sarker, Atanarayanpur Board Primary.
49 Md. Abdul Khalek (E), Bagshara Board Primary.
50 Paranuddin Pramanik, Satbaria U. P.
Abdul Hamid Kabiraj (E), Atanarayanpur Board Primary.
52 Nameruddin Pramanik, Banarpur Maktab.
53 Dhirendra Nath Ghose (E), Satbaria U. P.
54 Jnanendra Nath Mandal (E), Mundumala Board Primary.

Naogaon Centre.

1 Khaberuddin Pramanik (E), Sisoil Maktab.
2 Hemendra Lal Choudhuri, Farhadpur Board Primary.
3 Mohammad Basharatulla (E), Dodangi Maktab.
4 Kasemali Mridha (E), Mirzapur Board Primary School.
5 Mohammad Tamizuddin Sardar (E), Nagarkusumbi Maktab.
6 Sabur Buksha Sardar, Krishnapur Mirapur Primary.
7 Sanjibali Dewan, Lakhipur Maktab.
8 Manindra Nath Banerjee (E), Shibganj Board Primary.
9 Mohammed Abul Kasem, Bardapur Board Primary.
10 Osman Ali Kazi (E), Lakhipur Maktab.
11 Mohammad Makbul Hosain (E), Moktarpara Maktab.
12 Mohammad Imanali Kazi (E), Dodangi Maktab.
13 Md. Abdur Rahman (E), Dodangi Maktab.
14 Radha Krishna Adhikari (E), Sailgachi Primary.
15 Daimuddin Mondal, Kushadanga Board Primary.
16 Indra Mohan Sarkar, Palsa Krishnapur Board Primary.
17 Safar Ali Mandal, Kushadanga Board Primary.
18 Musammat Rahima Khatoon, Moktarpara Maktab.
19 Basiruddin Mandal, Shibganj Board Primary.
20 Chandra Kanta Basak (E), Hatshapila Board Primary.
21 Baroda Kanta Pramanik, Kanchan Board Primary.

Nator Centre.

1 Brojolal Sen (E), Nazirpur Board Primary.
2 Anil Krishta Dutta (E), Dearpara Board Primary.
Makhan Lal Nundy (E), Dearpara Board Primary.
4 Sisir Kumar Chakrabarty, Tiroil Board Primary.
Ershad Ali Pramanick (E), Nazirpur Board Primary.
6 Probhat Nath Chakrabarty, Sanwoil Primary.
7 Ishaqueuddin Mondal (E), Mashinda Maktab.
8 Sachindra Nath Sarker (E), Chamta Board Primary.
Bimal Chandra Talapatra, Sanwoil Primary.
10 Abdul Kader Pramanik, Sanwoil Primary.
11 Satish Chandra Mandal, Nandigram Board Primary.
12 Binapani Nundy (E), Nagar Board Primary.
13 Gul Mahammad Shaik, Duttagola U. P.
14 Rakibullah Mridha, Dearpara Board Primary.
15 Abdul Ghani Juyuddar, Kundarhat Maktab.
16 Promotho Nath Sil, Dearpara Board Primary.
17 Taheruddin Ahmed, Kufuria U. P.
18 Arshullah Fakir, Koshash U. P.

Jalpaiguri District.

Jalpaiguri Centre.

1 Arun Kumar Banerjee (E), Indrajmal Primary.
2 Belayet Ali Ahmed (E), Matiarpara Primary.
3 Mahammad Abdul Hai (E), Saldanga Primary.
4 Hara Chandra Das, Sardarpara Maktab.
5 Azimuddin Mahammed, Jhalangigoch Board Primary.
6 Habibar Rahman, Kharkharia Primary.
7 Sorabuddin Ahmed, Kharkharia Primary.
8 Basiruddin Ahmed (E), Bhajanpur Central Primary.
9 Md. Abdul Gofur (E), Bhajanpur Central Primary.
10 Bhubaneswar Das, Baguladangi Primary.
11 Dwijendra Mohan Sen (E), Mareya Primary.
12 Md. Abdul Hamid (E), Garinabari Board Primary.
13 Ramesh Chandra Barma (E), Sakhir Kamat Primary.
14 Md. Azaruddin (E), Bagdaha Primary.
15 Md. Namizuddin, Kajaldighi Board Primary.
16 Md. Hafizuddin (E), Sadarpara Maktab.
17 Azimul Hoque, Nirashipukuri Primary.
18 Abinash Chandra Sen (E), Mareya Primary.
19 Kasimuddin Ahmed (E), Thutapakri Central Primary.
20 Pramatha Nath Barma (E), Matiarpara Primary.
21 Azit Kumar Chakrabarti (E), Ramsundar Primary.
22 Parbatuddin Ahmed (E), Bhajanpur Central Primary.
23 Anil Chandra Barma, Basuniapara Primary.
24 Mafizuddin Ahmed (E), Thutapakri Central Primary.
25 Dattanarayan Sen (E), Tepriganj Board Primary.
26 Kumeswar Das, Baguladangi Primary.
27 Tarak Chandra Saha (E), Rajganj Primary.
28 Jagdharia Muchi, Barakamat Maktab.
29 Mahamed Dabiruddin (E), Sardarpara Maktab.
30 Rajani Kanta Roy, Kamarpara Board Primary.
31 Md. Tamizuddin, Kajaldighi Board Primary.

Patgram Centre.

1 Nicholas Kandulna (E), St. Mary's Primary.
2 Brahmanarayan Roy, Bairagirhat Primary.
3 Karimulla Ahmed (E), Sakowajhora Board Primary.
4 Pabiruddin Ahmed (E), Rajadanga Maktab.
5 Paulus Lakra (E), St. Mary's Primary.
6 Md. Sakatulla, Kawamari Board Primary.
7 Mangal Minj (E), St. Mary's Primary.
8 Kshir Prosad Ray, Jamadarpara I Primary.
9 Lalchand Das (E), Garkhuta IV Board Primary.
10 Suk Mohan Roy, Jamadarpara I Primary.
11 Dhanlu Mohan Roy, Debijhora Board Primary.
12 Dand Tigga (E), St. Mary's Primary.
13 Purna Deb Das, I, Gopalganja Board Primary.
14 Aswini Kumar Das (E), Garkhuta IV Board Primary.
15 Bhagirath Roy Pradhan, Burimari Primary.
16 Md. Hamiruddin, Kawamari Board Primary.
17 Sadananda Barman, Bhabalguri Primary.
18 Nanu Ram Barman, Bairagirhat Primary.
19 Penketu Mahammad, Kalirhat II Board Primary.
20 Nijamuddin Ahmed (E), Shibram Maktab.
21 Upendra Nath Roy, Churabhandar Board Primary.
22 Jotindra Nath Sarkar, Amguri Primary.
23 Tara Mohan Roy (E), Bhangamali II Primary.
24 Jotindra Nath Roy, II, Bairagirhat Primary.
25 Jamiruddin Ahmed, Debijhora Board Primary.
26 Asiruddin Ahmed, Chatra Board Primary.
27 Tabibar Rahuman, Kuchlibari Primary.
28 Md. Karimuddin, Bairagirhat Primary.

Alipur Duar Centre.

1 Kashi Nath Das, Tapsikhata Primary.
2 Suresh Chandra Das (E), Chaparerpar Central Primary.
3 Banka Nath Das (E), Chaparerpar Central Primary.
4 Niranjan Kumar Pal (E), Madarihat Board Primary.

Bogra District.

Bogra Centre.

1 Shafiuddin Ahmed (E), Shihali Board Free.
2 Sham Pada Sen (E), Katner Primary.
3 Dhirendra Kumar Shaha (E), Matidali Board Free.
4 Kamakshya Charan Shaha (E), Sherpur M. L. Free.
5 Md. Azizar Rahman Sarker (E), Karamja Board Primary.
6 Sarat Kumar Haldar (E), Santahar Primary.
7 Mt. Lutfannessa (E), Shardhankuti Board Free.
8 Md. Fayez Uddin (E), Matidali Board Free.
9 Md. Ahsan Ali (E), Matidali Board Free.
10 Trailakya Nath Sen (E), Kagoil Primary.
11 Md. Mozammel Hossain (E), Matidali Board Free.
12 Md. Mofiz Uddin, Khihali Board Primary.
13 Sudhir Chandra Roy (E), Karamja Board Primary.
14 Santosh Kumar Basu (E), Santahar Primary.
15 Md. Ramjan Ali (E), Matidali Board Free.
16 Hazrat Ali, Tilas Primary.
17 Moyez Uddin Joarder (E), Bashikora Maktab.
18 Satyendra Chandra Ghose (E), Katner Primary.
19 Md. Akram Hossain (E), Yakubia Maktab.
20 Suresh Chandra Shaha, Matidali Board Free.
21 Ajit Chandra Chaki (E), Katner Primary.
22 Nitai Chandra Kundu (E), Katner Primary.
23 Tabibar Rahman (E), Bihigram Board Primary.
24 Md. Abdul Hamid Pashari (E), Yakubia Maktab.
25 Ramesh Chandra Basak (E), Sherpur M. L. Free.
26 Md. Hazrat Ulla, Sarupara Board.
27 Md. Arif Ulla Mondal, Tarakandi Board Primary.
28 Manir Uddin Ahmed, Sarupara Board Primary.
29 Md. Rabi Ulla (E), Khottapara Maktab.
30 Md. Ayen Uddin, Chak Kagoil Primary.
31 Kartik Chandra Mohanta, Murail Primary.
32 Sarafat Ali, Jafarpur Board.
33 Subodh Kumar Bhattacharji (E), Santahar Primary.
34 Md. Ehsan Ali Mondal (E), Shahapur Board.
35 Md. Manir Uddin Pramanik (E), Jugirbhaban Board.
36 Ashalata Sarker (E), Santahar Primary.
37 Md. Abul Hossain Molla (E), Shmashmankandi.
38 Ayez Uddin Sarkar, Deogram Primary.
39 Hafiz Uddin, Kolgram Maktab.
40 Md. Afsar Ali (E), Katner Primary.
41 Fazar Uddin Mondal, Sherpur M. L. Primary.
42 Rahim Uddin Mondal (E), Dhamachama Maktab.
43 Md. Motarraf Ali Mollik (E), Bagjana Primary.
44 Md. Aftab Uddin Molla, Khupichakpara.
45 Rajani Kumar Talukdar, Barai Primary.
46 Fayez Uddin Pramanik, Chalitabari Primary.
47 Altaf Ali Mondal (E), Atmool Free.
48 Md. Monsur Ali Pramanik (E), Shagatia Board Primary.
49 Probodh Kumar Sarker (E), Santahar Primary.
50 Md. Habibar Rahman, Tentulia Maktab.
51 Mazibar Rahman Paikar, Bhandarpaika.
52 Jalal Uddin Mondal (E), Dhamachama Maktab.
53 Md. Abul Kasem Ziladar (E), Matidali Board.
54 Mt. Sakina Khatun (E), Shingrapara Maktab.
55 Nani Gopal Mali (E), Sherpur M. L.
56 Anil Kumar Das (E), Sherpur M. L.
57 Md. Hares Ali (E), Matidali Board Primary.
58 Md. Daraj Uddin (E), Dobaria Board Primary.
59 Md. Abdul Kader, Khanpur Primary.
60 Mrigendra Narayan Shaha (E), Sherpur M. L.
61 Md. Azim Uddin Pramanik (E), Yakubia Maktab.
62 Md. Omar Ali (E), Lakshmikola Board.
63 Md. Anwarul Haque (E), Shardhankuti Free.
64 Safer Uddin, Kolgram Maktab.
65 Jitendra Nath Mazumdar (E), Bhanurkanda Board.
66 Md. Abdul Karim Akanda (E), Uchrang Maktab.
67 Md. Malek Uddin (E), Khottapara Maktab.
68 Dalil Uddin Akanda, Khihali Board Primary.
69 Md. Abul Hossain (E), Kalitola Maktab.
70 Md. Chand Baksha, Shardhankuti Board Free.
71 Afsar Ali (E), Santahar Mission.
72 Nilima Rani Ghose (E), Santahar Mission.
73 Mt. Hazera Khatun (E), Padmapara Primary.
74 Md. Momtaz Uddin (E), Matidali Free.
75 Md. Mosharraf Hossain (E), Matidali Free.
76 Md. Tazammal Hossain (E), Matidali Free.
77 Md. Mofiz Uddin, II (E), Shardhankuti Board.
78 Akbar Ali Mondal, Manikdipa Board.
79 Rajendra Lal Rai (E), Sherpur M. L.
80 Abu Baker Siddique, Manikdipa Board.
81 Nagendra Nath Talukdar (E), Panishara Primary.
82 Dinesh Chandra Shaha (E), Sherpur M L.
83 Syed Abul Asad (E), Katner Primary.
84 Md. Hossain Ali (E), Dobaria Primary.
85 Akbar Ali (E), Shihali Board Free.
86 Amir Uddin Sarker, Thanthania Primary
87 Md. Maksed Ali (E), Matidali Free Primary.
88 Anadi Nath Saha (E), Digalkandi Board.
89 Abdul Hafiz Mondal (E), Behar Board Free.
90 Mofiz Uddin Pramanik (E), Kagoil Primary.
91 Belayet Hossain (E), Shagatia Board Primary.
92 Bhrigu Nath Prosad (E), Santahar Primary.
93 Md. Momtazur Rahman (E), Tunipara Maktab.
94 Ahibhusan Sarker, Tajpur Mohanpur Primary.
95 Md. Nazem Uddin Mondal (E), Nepaltali Primary.
96 Md. Mahi Uddin (E), Marichtala Manikpatal.
97 Susil Kumar Nandi (E), Santahar Primary.
98 Md. Fazlur Rahman Paramanik (E), Matidali Board Primary.
99 Mt. Sayatannessa (E), Murail Primary.
100 Md. Mayen Uddin Sarkar (E), Matidali Board Free.
101 Makbul Hossain Mondal (E), Jasopara Maktab.
102 Md. Abdul Hamid Mondal (E), Behar Free.
103 Sreemati Nidhubala Devi (E), Ayma Rasulpur Maktab.
104 Babar Ali Akanda (E), Karamja Board Primary.
105 Md. Jabed Ali Akanda, Karamja Board Primary.
106 Md. Nasir Uddin, Kartakola Primary.
107 Jasim Uddin Shakidar (E), Khottapara Maktab.
108 Ramesh Chandra Das, Tajpur Mohanpur Primary.
109 Gopendra Mohan Kundu (E), Bhabamganj Board.
110 Narayan Prosad Brahmachari (E), Sherpur M. L.
111 Surendra Nath Sen Gupta (E), Santahar Primary.
112 Abdur Razzak, Tilas Primary.
113 Ram Chandra Raha (E), Kalyani Primary.
114 Md. Jasim Uddin Pramanik, Karamja Board Primary.
115 Mayen Uddin Pramanik (E), Matidali Board Primary.
116 Naoshor Ali Fakir (E), Behar Board Primary.
117 Md. Mafiz Uddin, I (E), Shardhankuti Primary.
118 Momtaz Uddin Mondal (E), Jasopara Primary.
119 Amir Uddin, Berunja Board Primary.
120 Md. Azizul Haque, Shihali Board Primary.
121 Sudhir Kumar Haldar (E), Santahar Primary.
122 Md. Majibar Rahman, Shabdulditghi Board.
123 Lakshmi Narayan Biswas (E), Santahar Primary.

124 Amir Uddin Pramanik, Behar Free.
125 Mt. Meherunnessa (E), Bagjana Primary.
126 Md. Tasir Uddin Sonar (E), Shujabad Maktab
127 Abdul Gani Mian (E), Gujia Primary.
128 Karim Baksha, Chenchua Primary.
129 Md. Bodiozzama (E), Bagjana Primary.
130 Taiz Uddin Akanda (E), Dhalahar Maktab.
131 Md. Badiazzaman Pramanik (E), Chalitabary Primary.
132 Shariatulla Mandal (E), Sharagram Maktab.
133 Md. Raisuddin (E), Bashikora Maktab.

Malda District.

Malda Centre.

1 Muhammed Hussain, Debinagar Primary No. II.
2 Madan Mohan Sarkar (E), Daulatpur Primary.
3 Shaikh Arshad Ali (E), Daulatpur Primary.
4 Mohiuddin, Debinagar Primary No. II.
5 Munshi Chonre (E), Kharibari Primary.
6 Shaikh Zohak Ali (E), Daulatpur Primary.
7 Danesh Muhammed, Debinagar Primary No. II.
8 Md. Mohsen Ali (E), Chowhadditola Maktab.
9 Shaikh Moazzam Ali Chowdhury (E), Imampur Muktab.
10 Surendra Nath Sinha (E), Ramnagar Primary.
11 Raisuddin Biswas, Raninagar Taranagar Primary.
12 Moslem Shaikh, Bireswarpur Primary.
13 Md. Abdul Karim (E), Chowhadditola Maktab.
14 Khagendra Nath Sarkar (E), Mirzachak Primary.
15 Shukuruddin (E), Sadlichak Primary.
16 Radhika Nath Upadhya, Dakhinpanka Primary.
17 Shaikh Babaruddin Choudhury (E), Imampur Maktab.
18 Jamini Kanta Misra (E), Lalbathani Board Primary.
19 Nur Muhammed (E), Chowhadditola Maktab.
20 Muralidhar Das, Malatipur Primary.
21 Md. Bazlur Rahman Mian, Shashani Primary.
22 Shaikh Wajed Ali (E), Daulatpur Primary.
23 Hari Mohan Poli, Kharibari Primary.
24 Moslem Ali Biswas, Kumbhira Primary.
25 Shib Charan Saha, Boroi Primary.
26 Md. Imran Hossain (E), Khamar Primary.
27 Md. Astar Rahman (E), Dhainagra Raninagar Maktab.
28 Shaikh Mafiluddin, Boroi Primary.
29 Narayan Chandra Saha, Gandharbagram Primary.
30 Niazuddin (E), Sadlichak Primary.
31 Md. Raisuddin Biswas (E), Dhainagra Raninagar Maktab.
32 Abraham Soren (E), Kharibari Primary.
33 Nazar Ali (E), Baraduary Board Primary.
34 Raisuddin Biswas, Charbagdanga Primary No. I.
35 Altab Hossain Biswas, Raninagar Taranagar Primary.
36 Felu Shaikh, Mahadipur Primary.
37 Shaikh Rabbul Hossain, Mahanandapur Primary.
38 Rostam Ali Shaikh, Shershahi Lakshmipur Primary.
39 Momtaz Ali Mandal, Debinagar Central Primary.
40 Taib Ali Biswas, Debinagar Central Primary.
41 Sabdar Ali Mian (E), Malda Practising Primary.
42 Shaikh Majed Ali (E), Polladanga Free Primary.
43 Shaikh Ful Mohammed, Dakhinpanka Primary.
44 Dost Mohammed Shaikh, Ramnagar Primary.
45 Bhupendra Nath Chowdhury, Shershahi Primary.
46 Shaikh Faimuddin (E), Polladanga Free Primary.
47 Md. Lokman Ali, Raninagar Harishpur Maktab.
48 Md. Nasiruddin Mian (E), Dhainagar Raninagar Maktab.
49 Shamsuddin Biswas, Raninagar Taranagar Primary.
50 Sekandar Ali Biswas, Charbagdanga Primary No. I.
51 Shaikh Nasiruddin (E), Daulatpur Primary.
52 Shaikh Badiruddin (E), Lalbathani Board Primary.
53 Shaikh Azimuddin Ahmed, Boroi Primary.
54 Amjad Ali, Radhakantapur Primary.
55 Hitesh Chandra Sarkar, Chowka Primary.
56 Sahebjan Biswas, Kumbhira Primary.
57 Nalini Bhusan Das (E), Mohodipur Primary.
58 Indra Chandra Bandyopadhya (E), Malatipur Primary.
59 Sarbeswar Mandal (E), Ramnagar Primary.
60 Hasen Ali Mian, Chhatia Primary.

SECOND DIVISION.

(In order of serial number.)

Rajshahi District.

Rajshahi Centre.

1 Kunja Behari Ghosh, Kazla U. P.
2 Nalini Kanta Chakrabarty, Dashmari Board Primary.
3 Harijali Sarker (E), Belgheria Free Primary.
4 Nazibar Rahman Mandal (E), Belgheria Free Primary.
5 Nasimuddin Malla, Bera U. P.
6 Nahiruddin Sarkar, Kasipur Board Primary.
7 Dabiruddin Molla, Kasipur Board Primary.
8 Kabanuddin Mandal, Hatkhirjipur Board Primary.
9 Hamizuddin Mandal, Gogram Board Primary.
10 Md. Hassen Ali (E), Mandamala Board Primary.
11 Dabiruddin Pramanik (E), Satbaria U. P.
12 Md. Fazlar Rahaman, Jhalmalia Board Primary.
13 Khosh Mahammad Mandal, Jhalmalia Board Primary.
14 Md. Azizuddin Sardar (E), Maypara U. P.
15 Md. Nasiruddin Molla, Maypara U. P.
16 Basiruddin Mandal, Kayalipara U. P.
17 Md. Kafiruddin Shaha (E), Raipura Mission U. P.
18 Hasem Ali Mandal, Kajla U. P.
19 Tasiruddin Mandal, Pirgacha U. P.
20 Moslemuddin Shek, Darusha U. P.
21 Liakat Hossen, Shyampur Maktab.
22 Abdas Sabahan Mandal, Shyampur Maktab.
23 Sahar Ali Mandal, Shyampur Maktab.
24 Nur Mahammad (E), Gandagohali.
25 Nazemuddin, Gandagohali.
26 Alimuddin, Gandagohali.
27 Abdul Jabbar Pramanik, Rustampur Maktab.
28 Rahamatulla Pramanik, Rustampur Maktab.
29 Abdur Rahaman Sardar (E), Atanarayanpur Board Primary.
30 Israil Sardar (E), Atanarayanpur Board Primary.
31 Satish Chandra Ghose, Aihai U. P. School.
32 Ajir Ali Sardar, Baduria Free Primary.
33 Azizuddin Pramanik, Baduria Free Primary.
34 Sukuruddin Mridha, Achinghat Board Primary.
35 Manik Ullah Shah, Hat Khujipur Board Primary.
36 Lufaruddin Khan, Saranjai Board Primary.
37 Md. Hyderali (E), Bagshara Board Primary.
38 Chainuddin Pramanik (E), Satbaria U. P. School.
39 Md. Abdul Quddus Munshi, Jhahualia Board Primary.
40 Md. Badaruddin Molla, Jhahualia Board Primary.
41 Ismail Hossain Molla, Khamargram U. P. School.
42 Gul Mahammad Mridha, Khamargram U. P. School.
43 Enayetulla Molla, Khamargram U. P. School.
44 Emajuddin Sarkar (E), Kadirpur Maktab
45 Din Mahammad, Gandagohati Maktab.
46 Ayhia Ali Mandal, Rustampur Maktab.
47 Barkatulla Pramanik, Ponapukur U. P. School.
48 Serajuddin Kazi, Sonadanga Board Primary.
49 Nabai Sardar, Gogram Board Primary.
50 Debendra Nath Pramanik, Berabari Maktab.
51 Kamala Kanta Maktab, Belgharia Free Primary.
52 Pijush Kanti Biswas, Belgharia Free Primary.
53 Dhirendra Nath Pal, Bagshara Board Primary.
54 Bhuban Chandra Mandal, Bagshara Board Primary.
55 Maniruddin Molla, Atrai Maktab.
56 Tasiruddin Mridha, Atrai Maktab.
57 Abdul Baki Khondakar, Baigachha Board Primary.
58 Ahmed Ali Pramanik, Bhatkhali Maktab.
59 Abdul Jalil Shah (E), Sadopara Maktab.
60 Samserali Mandal, Sonadanga Board Primary.
61 Rohini Kanta Saha, Baya Board Primary.
62 Debra Majhi (E), Mundamala Board Primary.
63 Srish Chandra Mandal (E), Kapasia U. P. School.
64 Makhan Chandra Pramanik, Nardas U. P. School.
65 Madhu Sudan Mandal, Darusha U. P.
66 Kader Baksh Mir, Annanarayanpur Board Primary.
67 Abbas Ali Shah, Hat Madhnagar Board Primary.
68 Debendra Nath Mandal (E), Dakra Board Primary.

Naogaon Centre.

1 Gangadhar Roy, Shibganj Board Primary.
2 Asmotulla Sarkar, Katkhiur Primary.
3 Mobarakali Mondal, Khalisakuri Primary.
4 Babar Ali Sardar, Khalisakuri Primary.
5 Hosain Ali Pramanik, Dwipchandpur Board Primary.
6 Basiruddin Mandal, Gopalpur Board Primary.
7 Mohammad Asiruddin, Gopalpur Primary.
8 Mohammad Makbul Hossain, Gopalpur Primary.
9 Md. Jasimud Sardar (E), Kadoa Maktab.
10 Md. Kalu Mandal (E), Kadoa Maktab.
11 Nasab Ali Mandal, Lakhipur Maktab.
12 Baidya Nath Basak (E), Hatshapila Board Primary.
13 Gopesh Chandra Mahato, Hatshapila Board Primary.
14 Digambar Nath Mandal, Gopalpur Board Primary.
15 Md. Karim Baksh Mandal, Barasanti Primary.
16 Sachindra Nath Ghosh, Kanchan Board Primary.
17 Sahabaz Ali Pramanik, Bheti Board Primary.
18 Shaik Mufizuddin, Krishnapur Mirapore Primary.
19 Mohammad Janab Ali Khan, Dwipchandpur Primary.
20 Mohammad Erfan Ali, Barasanta Primary.
21 Sulaiman Ali Mondal (E), Mirzapur Board Primary.
22 Ilimuddin Khan, Chak Gowri Model Primary.
23 Rafiquddin Mandal (E), Salbari Board Primary.
24 Karimuddin Mandal (E), Salbari Board Primary.
25 Rahim Baksh Sardar (E), Dodangi Maktab.
26 Nedaru Sardar (E), Natshal Maktab.
27 Sadananda Das (E), Baidyapur Board Primary.
28 Ahiruddin Mandal, Sanyasitala Board Primary.
29 Md. Tasiruddin Shah (E), Dodangi Maktab.
30 Amanulla Sardar (E), Chakkeshab Maktab.
31 Md. Rafikuddin Majhi (E), Moktarpara Maktab.
32 Budha Singh Sardar (E), Hatsapila Board Primary.

Nator Centre.

1 Radha Rani Dasi, Dearpara Board Primary.
2 Majibar Rahman Khondker, Srirampore Board Primary.
3 Noazesh Ali Khondaker, Srirampur Board Primary.
4 Abdul Gani Pramanik, Beaghat Primary.
5 Kasem Ali Pramanik, Katuabari Upper Primary.
6 Asanuddin Pramanik, Joykuri Maktab.
7 Mahiuddin Pramanik, Bijral Maktab.
8 Shib Sunkar Halder, Nazirpur Board Primary.
9 Manindra Nath Sarker, Kafuro Upper Primary.
10 Radha Raman Kundu (E), Charta Board Primary.
11 Ram Krishna Kundu, Katwabaria Board Primary.
12 Adhir Chandra Das, Sidhakhali Upper Primary.
13 Amala Bala Dasi, Jote Gobindapur Upper Primary.
14 Mahammadali Mridha, Madhnagar Primary.
15 Safiuddin Pramanik, Taratia Upper Primary.
16 Md. Ifaral Ali Sonar, Koshash Upper Primary.
17 Akkas Ali Khan, Chandai Board Primary.
18 Abdus Sattar Mia (E), Malanchi Maktab.
19 Syed Ali Pramanik, Chakkalma Upper Primary.
20 Omed Pramanik, Joykuri Maktab.

Jalpaiguri District.

Jalpaiguri Centre.

1 Rabindra Nath Das (E), Paharipara Primary.
2 Kanak Lal Chakraborty (E), Indrajinal Primary.
3 Nalini Kumar Sarkar (E), Indrajmal Primary.
4 Amulya Charan Saha (E), Rajganj Primary.
5 Phanindra Nath Datta, Shaldanga Primary.
6 Joy Charan Barma, Bodeswaribari Board Primary.
7 Benoy Charan Barma, Bodeswaribari Board Primary.
8 Hara Kumar Barma, Mirganj Primary.
9 Padma Mohan Barma, Dighalgaon Board Primary.
10 Mahammed Ahmadullah (E), Paharipara Primary.
11 Azimuddin Ahmed, Kamarpara Board Primary.
12 Mahammed Abu Taleb, Kechua Boalmari Board Primary.
13 Mahammed Yasinuddin Prodhan, Kechua Boalmari Board Primary.
14 Aziz Baksh Mahammed, Hatpukuri Primary.
15 Hafazuddin Mahammed, Hatpukuri Primary.
16 Kasemuddin Ahmed, Bhangamali Primary.
17 Mahammed Tasiruddin (E), Bhajanpur Central Primary.
18 Tamizuddin Ahmed (E), Bhajanpur Central Primary.
19 Basiruddin Ahmed (E), Bhajanpur Central Primary.
20 Tasiruddin Ahmed, Bhajanpur Central Primary.
21 Basiruddin Mahammed, Barakamat Maktab.
22 Rahman Ali, Barakamat Maktab.
23 Md. Najibuddin, Bahadur Primary.
24 Nafiruddin Mahammed (E), Rajganj Primary.
25 Murshid Abu Hossain (E), Paharipara Primary.
26 Mahammed Khalil, Jhalangigoch Board Primary.
27 Sirajdowla Ahmed (E), Berubari Central Primary.
28 Samaratram Borman, Munshipara Board Primary.
29 Radha Pradhan Das, Debnagar Primary.
30 Khir Mohan Roy (E), Pathkata Maktab.
31 Hari Kinkar Roy, Nutanbandar Primary.
32 Prafulla Ratan Banerjee (E), Indrajmal Free Primary.
33 Prabhat Kumar Basu (E), Indrajmal Free Primary.
34 Jitesh Chandra Chakravarty (E), Indrajmal Free Primary.
35 Sudhir Chandra Ghose (E), Indrajmal Free Primary.
36 Abani Kanta Bandopadhyaya (E), Indrajmal Free Primary.
37 Ramesh Chandra Saha, Rajganj Free Primary.
38 Rabindra Nath Barma, Kajaldihi Board Primary.
39 Mani Bhusan Modak (E), Saldanga Free Primary.
40 Sreemati Dharitri Debi (E), Mirganj Free Primary.
41 Musammat Ayesha Khatoon (E), Paharipara Free Primary.
42 Mahammad Abdus Sobhan (E), Paharipara Free Primary.
43 Mahammad Zahural Hoque (E), Kechua Boalmari Free Primary.
44 Mahammad Sahidar Rahman (E), Kechua Boalmari Free Primary.
45 Md. Saberali, Thutapakri Central Free Primary.
46 Md. Barajali, Thutapakri Central Free Primary.
47 Md. Azibuddin, Debnagar Free Primary.
48 Safiruddin, Malani Board Primary.
49 Khamiruddin Ahmed (E), Berubari Central Primary.
50 Mosammat Khodeja Khatoon, Berubari Central Primary.
51 Md. Aminar Rahman, Saldanga Free Primary.
52 Bhagirath Roy (E), Saberia Free Primary.

Patgram Centre.

1 Gangaprosad Roy, Haslurdanga Board Primary.
2 Suk Mohan Roy, Haslurdanga Board Primary.
3 Mukunda Lal Roy, Amguri Primary.
4 Satish Chandra Sen, Kamarhat Primary.
5 Jatindra Nath Sen, Kamarhat Primary.
6 Manindra Nath Dutt Banik, Baura Primary.
7 Tarini Kanta Roy, Sarkerpara I Board Primary.
8 Md. Samser Taher, Neolabasti Primary.
9 Jabeda Khatun, Kawamari Board Primary.
10 Chhoyeuddin Ahmed, Dhabalguri Primary.
11 Shah Alam Mean, Shibram Maktab.
12 Jazlar Rahaman, Shibram Maktab.
13 Keramat Ali Prodhan, Ekchalia Maktab.
14 Abdul Mannab, Sakawajhona Board Primary.
15 Bishnu Deb Das, Gopalganja Board Primary.
16 Harish Chandra Roy, Barghoria II Board Primary.
17 Akshoy Ch. Roy, Barghoria II Board Primary.

18 Mohesh Chandra Roy, Dhabalguri I Primary.
19 Mohesh Chandra Das, Barghoria Primary.
20 Deb Nath Das, Barghoria Primary.
21 Satya Mohan Roy, Hasludanga Board Primary.
22 Sadaru Mohan Roy, Hasludanga Board Primary.
23 Bimala Sundari Debi, Kharibari Board Primary.
24 Azindra Nath Roy, Bekro Free Primary.
25 Rang Nath Roy Dakua (E), Aswarpara Board Free Primary.
26 Sada Nanda Roy, Bhandardah Board Free Primary.
27 Gour Gobinda Adhikari, Bhandardah Board Free Primary.
28 Kali Kanta Roy, Charcharabai Board Free Primary.
29 Jatindra Nath Roy, I, Charcharabai Board Free Primary.
30 Satish Chandra Roy, II (E), Sarkarpara I Board Free Primary.
31 Brajendra Nath Roy, Falnapur Free Primary.
32 Jatindra Nath Katham (E), Burimari Free Primary.
33 Md. Ansaruddin, Baragharia Board Primary II.
34 Sakinuddin Ahmed, Jongra Free Primary.
35 Basiruddin Ahmed, Aswarpara Board Primary.
36 Habibulla Ahmed (E), Aswarpara Board Primary.
37 Hashar Mahmud, Bhandardah Board Free Primary.
38 Ansaruddin Sarkar, Baura Free Primary.
39 Ishaque Ahmed, Baniadingi Free Primary.
40 Hafimuddin, Burimari Free Primary.
41 Mosammat Tahiran Nesa, Jongra Free Primary.
42 Kabindra Nath Das (E), Bhandain Board Free Primary.
43 Debi Charan Roy, Baragharia Board Primary II.
44 Abhay Charan Roy, Baragharia Board Primary II.
45 Karnadhar Barma, Baragharia Board Primary II.
46 Surendra Nath Adhikari, Churabhudar Free Primary.
47 Gopal Chandra Das (E), Mateki Free Primary.
48 Srish Chandra Basak, Kamarhat Free Primary.
49 Sushil Chandra Das, Garkhuta IV Board Free Primary.

Alipur Duar Centre.

1 Sahajuddin Ahmed (E), Salkumar East Primary.
2 Gopal Chandra Das, Barabisha Board Primary.
3 Upendra Nath Barman, Barabisha Board Primary.
4 Fanindra Nath Das (E), Kumargram Board Primary.
5 Jogendra Nath Das (E), Kumargram Board Primary.
6 Govinda Ram Roy, Salkumar East Primary.
7 Lajar Hansda (E), Santalpur Mission Primary.
8 Abdur Rahman (E), Mujnai Free Primary School.
9 Bidhu Ram Das (E), Madarihat Board Primary School.
10 Akhil Chandra Das, Tapsikhala Free Primary.

Bogra District.

Bogra Centre.

1 Shuranjan Nath Khan (E), Bhabaniganj Board.
2 Naresh Chandra Sarker (E), Sherpur M. L. Free.
3 Ranjit Kumar Kar (E), Santahar Primary.
4 Ajit Sinha Rai (E), Santahar Primary.
5 Menhaj Uddin Ahmed (E), Matidali Board Free.
6 Kabej Uddin Fakir, Manikchak Board Primary.
7 Jamal Uddin Pramanik, Chalitabari Primary.
8 Mt. Altafannessa, Fanpor Board Primary.
9 Tafer Uddin Pramanik (E), Gopalpur Board Primary.
10 Ali Mamud Sarker (E), Kalyani Primary.
11 Md. Nabir Uddin Pramanik (E), Karamja Board Primary.
12 Md. Abu Hossain Shaik, Dighalkandi Board Primary.
13 Md. Abul Hossain (E), Morichtala Manikpatal.
14 Kajem Uddin Sarker (E), Deodanga Board Primary.
15 Md. Reaj Uddin Mondal, Bhandarbari Primary.
16 Kalim Uddin Mondal, Bhandarbari Primary.
17 Jaher Ali Pramanik (E), Karitala Primary.
18 Md. Tafiz Uddin Pramanik, Nepaltali Primary.
19 Md. Jabed Ali Mollah, Khupichakpara.
20 Md. Zillar Rahman, Kartakola Primary.
21 Taib Ullah, Shabduldighi Board Primary.
22 Naim Uddin Mondal (E), Behar Free Primary.
23 Makbul Hossain Khondker, Karibamja Primary.
24 Khater Mamud Khan, Karibamja Primary.
25 Arab Ali (E), Kumarpara Primary.
26 Fazlur Rahman, Jafarpur Board Primary.
27 Faiz Uddin (E), Santahar Mission.
28 Gauhar Ali, Santahar Mission.
29 Alef Uddin, Santahar Mission.
30 Shaikh Taher Uddin, Karibamja Primary.
31 Emdad Ali Shakidar (E), Atmool Free Primary.
32 Mt. Rafiunnessa (E), Atmool Free Primary.
33 Arab Ali Fakir, Atmool Free Primary.
34 Amir Uddin Sarker, Deogram Primary.
35 Md. Akam Uddin, Bhugoil Talkhur Board Primary.
36 Nehal Uddin Ahmed (E), Bagjana Primary.
37 Baraj Uddin Akanda (E), Atmool Free Primary.
38 Majibar Rahman Mondal, Chandanpur Primary.
39 Momtazur Rahman Pramanik, Chandanpur Primary.
40 Rabi Ullah Fakir, Kolunja Primary.
41 Azizar Rahman Mollah (E), Ashekpur Chakjora Board.
42 Md. Huzur Ali Akanda (E), Niltapara Maktab.
43 Abul Hossain Md. Jarjis (E), Khottapara Maktab.
44 Mahammad Ali, Palsha Maktab.
45 Abdul Aziz Fakir, Tentulia Maktab.
46 Abul Ashraf Md. Majibar Rahman (E), Uchrang Maktab.
47 Moazzem Ali Mondal, Chandmuha Maktab.
48 Md. Abdul Jobbar Sarker (E), Kalyapara Maktab.
49 Hridoy Chandra Mondal, Tajpur Mohanpur Primary.
50 Birendra Nath Adhikary (E), Santahar Mission Primary.
51 Kishori Ranjan Sarkar, Uthali Board Primary.
52 Mahendra Nath Pramanik (E), Ashekpur Chak Jore Primary.
53 Md. Mohiuddin (E), Shabgram Board Primary.
54 Abul Hossain Mondal (E), Malatinagar Primary.
55 Mafizuddin Pramanik, Bhabaniganj Board Primary.
56 Matiar Rahman, Krishnapur Board Primary.
57 Shahobuddin Bhuiyan, Rudrabaria Primary.
58 Md. Ismail, Chak Kagail Primary.
59 Nazabatulla, Khanpur Primary.
60 Azizur Rahman Fakir (E), Gopalpur Primary.
61 Md. Ashrafali Mondal (E), Gopalpur Primary.
62 Alauddin Shaikh (E), Masimpur Primary.
63 Musammat Khateman Nesa, Masimpur Primary.
64 Musammat Nurannessa Khatoon (E), Gopalpur Primary.
65 Karbanali Mandal, Saduria Maktab.
66 Kasimuddin Pramanik, Saduria Maktab.
67 Rama Prasanna Gupta Bhuya (E), Maltinagar Primary.
68 Kalipada Deb (E), Bhabaniganj Board.
69 Paresh Chandra Majumdar (E), Bhabaniganj Board.
70 Bijoy Krishna Roy, Hariakandi Board.
71 Basanta Kumar Modak, Uthali Board Primary.
72 Janaki Saran Prasad (E), Santahar Primary.
73 Fanindra Mohan Bagchi (E), Kumarpara Primary.
74 Suresh Chandra Mohanta, Kumarpara Primary.
75 Md. Asir Uddin (E), Matidali Board Primary.
76 Md. Hatem Ali, Matidali Board Primary.
77 Md. Yusuf Uddin, Matidali Board Primary.
78 Amjad Ali Fakir, Thanthania Primary.
79 Abdul Latif Khandaker, Thanthania Primary.
80 Nurul Hossain Pramanik, Ulipur Primary.
81 Mt. Altafannessa (E), Rohadaha Primary.
82 Sajar Ali Molla, Karamja Board Primary.
83 Md. Abdul Goffar Akanda (E), Karamja Board Primary.

84 Md. Aftab Hossain Mondal (E), Karamja Board Primary.
85 Md. Malek Uddin Akanda, Karamja Board Primary.
86 Md. Jonab Ali Akanda (E), Padmapara Primary.
87 Md. Motaraf Ali (E), Padmapara Primary.
88 Abdul Jalil Mondal, Tarakandi Board Primary.
89 Isahaque Uddin Sarker, Vandarbari Primary.
90 Habibar Rahman Tarafdar, Khupichakpara Primary.
91 Md. Ibrahim, Kortakola Primary.
92 Md. Reaz Uddin, Kortakola Primary.
93 Md. Mayen Uddin, Shardhankuti Primary.
94 Reaz Uddin Pramanik (E), Behar Free Primary.
95 Md. Salim Uddin, Chak-kagoil Primary.
96 Kasim Uddin Mian (E), Shagatia Board Primary.
97 Md. Amir Ali, Tilas Primary.
98 Khair Ali, Bihigram Board Primary.
99 Sabed Ali, Garibolgharia Primary.
100 Mayez Uddin, Garibelgharia Primary.
101 Ayen Uddin (E), Santahar Mission Primary.
102 Mafiz Uddin (E), Santahar Mission Primary.
103 Mayez Uddin, Santahar Mission Primary.
104 Isahaque Ali Sardar, Shahapur Board Primary.
105 Mir Akbar Ali (E), Gopalpur Primary.
106 Md. Azim Uddin Fakir (E), Gopalpur Primary.
107 Hashmat Ulla Mondal, Beogram Primary.
108 Mahafez Uddin Mondal (E), Shihali Free Primary.
109 Shaikh Sakhawat Ali (E), Masimpur Primary.
110 Mt. Lutfunnesa Khatun (E), Gopalpur Primary.
111 Bahar Uddin Akanda (E), Ashekpur Chakjora.
112 Nezam Uddin Akanda, Shaduria Maktab.
113 Md. Bayen Uddin Mondal, Ayma Rasulpur Maktab.
114 Md. Sabed Ali Khan (E), Ayma Rasulpur Maktab.
115 Majir Uddin Ahmed, Mahabatpur Board Primary.
116 Ayezuddin Pramanik (E), Uttarjoypur Maktab.
117 Nazem Uddin Sarker, Koitahar New Maktab.
118 Isir Uddin Mondal (E), Niltapara Maktab.
119 Md. Mozaffar Rahman Khalifa (E), Kalitala Maktab.
120 Rahamat Ulla (E), Kalitala Maktab.
121 Md. Miajan Uddin Mondal (E), Shujabad Maktab.
122 Md. Sahar Uddin Pramanik (E), Shujabad Maktab.
123 Abedin Ali Molla (E), Sasankandi Maktab.
124 Akbar Ali Pramanik (E), Sasankandi Maktab.
125 Asmat Ulla Pramanik (E), Raimajhira Maktab.
126 Dabir Uddin Akanda (E), Chandmoha Maktab.
127 Mafiz Uddin Akanda (E), Chakpathalia Maktab.
128 Majibar Rahman Molla (E), Chakpathalia Maktab.
129 Sarif Uddin Molla, Darigacha Maktab.
130 Ashalata Nandi (E), Santahar Primary.
131 Bhabendra Nath Shaha, Berunja Board Primary.
132 Rajkanta Nath, Kendul Board Primary.
133 Sarat Chandra Tokdar, Uttarjoypur Maktab.
134 Khageswar Mondal, Bagjana Primary.
135 Ramnath Rajbhar (E), Nepaltali Primary.
136 Sudhir Chandra Kundu, Palsa Maktab.
138 Suresh Chandra Shaha (E), Rohadaha Primary.
139 Jahir Uddin Mondal (E), Matidali Free.
140 Shamser Ali Akanda, Ulipur Primary.
141 Abul Hares Sarker (E), Padmapara Primary.
142 Md. Abdul Majid Mandal, Ayema Rasulpur Maktab.
143 Md. Ayenuddin Molla, Mahabatpur Board Primary.
144 Md. Ehsanat Hossain (E), Dibakarpur Maktab.
145 Kasemali Pramanik, Dopara Board Primary.
146 Md. Hedayetulla, Uchrang Maktab.
147 Mazibor Rahman Mandal (E), Sharagram Maktab.
148 Mahiruddin Sarkar (E), New Shamiakandi Maktab.
149 Basanta Kumar Mali, Atmool Board Primary.
150 Bhabesh Chandra Biswas (E), Santahar Primary.
151 Basanta Kumar Deb Nath (E), Shabgram Free Primary.

Malda District.

Malda Centre.

1 Firingi Sarkar, Nandalalpur Primary.
2 Narayan Lal Agarwala, Baraduary Board Primary.
3 Biswanath Saha (E), Baraduary Board Primary.
4 Gouri Rani Devi (E), Srirampur Board Primary.
5 Md. Meherjan, Fatekhani Primary.
6 Musammat Jamila Khatoon (E), Dharampur Primary.
7 Shaikh Muhammed Maruf, Rarial Primary.
8 Shaikh Muhammad Wasil, Rarial Primary.
9 Shaikh Imanuddin Ahmed, Dakhinpanka Primary.
10 Shaikh Yakub Hossain, Boroi Primary.
11 Shaikh Shahabuddin Ahmed, Dakhinpanka Primary.
12 Md. Jonab (E), Sadlichak Primary.
13 Md. Sekendar Ali (E), Khamar Primary.
14 Muhammed Yasin, Debinagar Primary No. II.
15 Afzal Hossain Biswas, Benodepur Mistiripara Primary.
16 Md. Sabiruddin Biswas, Sarjan Maktab.
17 Md. Momtaz Ali, Raninagar Harishpur Maktab.
18 Md. Emran Ali, Char Alatuli Maktab.
19 Md. Naimuddin (E), Chowhadditola Maktab.
20 Shaikh Md. Solaiman, Nawada Jadupur Primary.
21 Md. Amjad Ali, Nawada Jadupur Primary.
22 Md. Ashanullah, Nawada Jadupur Primary.
23 Ramani Kanta Chowdhury (E), Dharampur Free Primary,
24 Jyotish Chandra Das, Dharampur Free Primary.
25 Baidya Nath Thokdar, Mahanandapur Primary.
26 Bidhu Bhusan Sarkar (E), Dhainagra Raninagar Maktab.
27 Debendra Chandra Mandal, Benodepur Mistiripara Primary.
28 Benod Mandal (E), Bakharali Primary.
29 Surendra Nath Sarkar, Raninagar Taranagar Primary.
30 Gobindo Besra, Kharibari Primary.
31 Abdul Majid (E), Malda Practising Primary.
32 Bejoy Bhusan Mukhopadhya (E), Lalbathani Board Primary.
33 Jitendra Nath Ghose, Shershahi Lakshipur Primary.
34 Sudhir Chandra Das (E), Lalbathani Board Primary.
35 Gopal Pal, Malatipur Primary.
36 Kshetra Mohan Barman, Mahanandpur Primary.
37 Dwarkadas Agarwala (E), Baraduary Board Primary.
38 Chawdhury Pal, Baraduary Board Primary.
39 Sasi Bhusan Dobe, Singabad Primary.
40 Sitesh Chandra Das, Amrity Primary.
41 Ayyub Ali (E), Polladanga Free Primary.
42 Md. Safruddin Molla, Bajratak Free Primary.
43 Musammat Mariam Nesa (E), Dharampur Primary.
44 Shaikh Abdur Rahman (E), Jadupur Board Primary.
45 Shaikh Asiruddin (E), Jadupur Board Primary.
46 Shaikh Reazuddin (E), Jadupur Board Primary.
47 Shaikh Md. Samiruddin, Rarial Primary.
48 Shaikh Safiluddin Ahmed, Mahanandpur Primary.
49 Shaikh Md. Mustafa, Pema Primary.
50 Syedar Rahman (E), Sadlichak Union Primary.
51 Shaikh Khabiruddin (E), Imampur Maktab.
52 Shaikh Praman Ali (E), Sadlichak Primary.
53 Mahbub Hossain (E), Islampur Maktab.
54 Golap Ali Shaikh, Baragharia Primary.
55 Idris Ali Biswas, Charbagdanga Primary.
56 Mustaq Ahmed, Radhakantapur Primary.
57 Md. Amjad Ali, Char Alatuli Maktab.
58 Md. Mansur Ali (E), Chowhadditab Maktab.
59 Natabar Pramanik, Dakshinpanka Primary.
60 Sudhir Kumar Chowdhury (E), Rohanpur Primary.
61 Sukur Chand Sarkar, Kanturka Santhal Primary.
62 Pramila Sundari Das (E), Singabad Primary.
63 Mohini Mohan Das (E), Mirzachak Primary.
64 Mahendra Nath Das, Rarial Primary.
65 Radhesh Chandra Mandal, Krishnanagar Primary.
66 Sasi Nath Sarkar, Kumbhira Primary.

S. P. BANERJEE,
Second Inspector of Schools, Rajshahi Division-in-charge.

Presidency Division.

40-1A, Free School Street, Calcutta, the 21st December 1934.

The following candidates have passed the Primary (Maktab) Final Examination, 1934 :—

(E indicates that the candidates have passed in English.)

Roll No.	Name.	Division.
	District Nadia.	
	Krishnagar Centre.	
	Madanganga U. P.	
2	Anil Kumar Dey (E) ..	II
	Gobra U. P.	
4	Habul Chandra Ghatak ..	II
	Benepara U. P.	
5	Suresh Chandra Das (E) ..	II
	Radharaman U. P.	
10	Narayan Chandra Das (E) ..	II
	Sonatola U. P.	
12	Bejoy Kumar Chandra ..	I
13	Lal Mohan Dey ..	I
14	Dhiraj Chandra Sarkar ..	I
	Mahamaya U. P.	
17	Tarak Nath Mukherjee (E) ..	I
	Panighata U. P.	
18	Dulal Chandra Maitra (E) ..	II
	Birpur Board Primary.	
20	Narayan Chandra Dey ..	II
	Ghurni U. P.	
25	Shib Narayan Sarnakar (E) ..	I
29	Shyam Sundar Pramanik (E) ..	I
30	Tarak Das Banerjee (E) ..	II
32	Hazari Lal Mukherji (E) ..	II
33	Debendra Nath Pramanik (E) ..	I
	Debagram Practising U. P.	
35	Hari Sadan Mukherjee (E) ..	I
36	Sadananda Goswami (E) ..	I
	Krishnagar Practising U. P.	
37	Byomkesh Biswas (E) ..	I
38	Protip Chandra Bhattacharyya (E)	I
39	Abani Kumar Das (E) ..	I
40	Radha Govinda Karmakar (E) ..	II
41	Tarak Chandra Das (E) ..	I
	Dadupur U. P.	
43	Basanta Kumar Roy (E) ..	I
44	Bijan Kishore Acharya (E) ..	I
	Madhabpur U. P.	
46	Shambhu Nath Datta (E) ..	II
	Pukhuria U. P.	
50	Tamal Krishna Mandal (E) ..	I
	Bahadurpur U. P.	
53	Shyam Gopal Gorai ..	II
	Panighata U. P.	
55	Mritunjoy Halder ..	II
	Matiari U. P.	
57	Aditi Kumar Das ..	I
58	Suryakanto Mandal ..	I
59	Shanker Das ..	II
	Mahamaya U. P.	
62	Kamala Kanto Malakar (E) ..	I
	Ghurni U. P.	
63	Kartic Chandra Pal (E) ..	II
	Debagram Practising U. P.	
64	Ashutosh Sadhu (E) ..	II
65	Purna Chandra Halder ..	I
	Krishnagar Practising U. P.	
66	Balai Chandra Halder (E) ..	II
67	Haran Chandra Misra (E) ..	II
	Madhabpur U. P.	
68	Govinda Chandra Biswas (E) ..	II
	Gotepara U. P.	
69	Anukul Saha (E) ..	II
	Bora Itna U. P.	
70	Sheikh Md. Yusuf Ali ..	II
71	Sheikh Md. Alamgir ..	II
	Simuli-Narayanpur U. P.	
72	Kobad Ali Malita (E) ..	I
73	Nafaladdin Mandal (E) ..	I
	Bhimpur Board U. P.	
74	Afsaruddin Ahmed (E) ..	I
	Pukhuria U. P.	
75	Md. Khabir Rahaman Sheikh (E) ..	I
76	Md. Haibar Ali Biswas (E) ..	I
	Kultola U. P.	
77	Mazammel Haque Mandal (E) ..	II
	Bagmara U. P. Maktab.	
80	Md. Keramat Ali (E) ..	I
81	Md. Hedayetullah (E) ..	II
	Nafargang U. P. Maktab.	
85	Md. Jalaluddin Molla (E) ..	II
	Sonatola U. P.	
87	Tabiruddi Sheikh ..	I
	Dalimoula U. P.	
88	Sajit Ali Mandal	I
	Bahadurpur U. P.	
89	Alihini Sheikh ..	I
	Birpur Board Primary.	
91	Amir Ali Sheikh ..	II
	Matiari U. P.	
94	Jeher Ali Sheikh ..	II

Roll No.	Name.	Division.
	Hatkhola U. P. Maktab.	
95	Samsul Huda Mian (E)	I
96	Umber Ali Mian	I
97	Abdul Alim Mian	II
	Mahamaya U. P.	
100	Nur Islam Dafadar (E)	I
	Belpukur U. P.	
101	Nur Mahammad Sheikh	II
	Ghurni U. P.	
102	Akbar Ali Khan (E)	II
	Debagram Practising U. P.	
103	Samsuddin Ahmed (E)	II
105	Moseb Kakka (E)	I
106	Nasiruddin Ahmed (E)	I
	Krishnagar Practising U. P.	
107	Asrafzaman (E)	I
	Ghurni U. P.	
109	Sachinandan Das Bairagya (E)	II
	Mirzapur U. P. Maktab.	
112	Md. Jel Huque	II
	Shibpur U. P.	
115	Swaradindu Biswas (E)	II
117	Dasharathi Biswas (E)	II
	Ranaghat Centre.	
	Hijuly U. P.	
2	Tarak Chandra Ghose (E)	I
	Ghosepara Saraswati U. P.	
5	Kalipada Paul (E)	I
	Birshi U. P.	
6	Prem Chand Ghose	I
	Humnipota U. P.	
8	Khudiram Ghose	I
	Eruli U. P.	
10	Mallik Chand Biswas (E)	II
	Ramnagar U. P.	
11	Sakti Pada Mukhopadhya (E)	II
	Madanpore U. P.	
12	Balai Saran Ghose (E)	II
	Animali U. P.	
13	Phani Bhusan Mukhopadhya (E)	II
14	Gunendra Nath Mukhopadhyay (E)	I
	Nasrapara U. P.	
15	Gopal Chandra Ghose (E)	I
16	Paresh Nath Paul (E)	I
	Nawpara P. U. U. P.	
22	Biswanath Chakrabarti (E)	I
23	Hajarilal Ghose (E)	II

Roll No.	Name.	Division.
	Bhabesh Ch. U. P.	
25	Dhirendra Nath Ghose (E)	I
26	Lal Mohan Biswas	II
	Dattapulia U. P.	
27	Prahlad Chand Gan (E)	I
28	Gopendra Madhab Datta (E)	I
29	Rahit Kumar Datta (E)	I
30	Santosh Kumar Ghose (E)	II
	Baganchra U. P.	
31	Durgapada Roy (E)	I
32	Ramendra Nath Chakrabarti (E)	II
	Sutragarh Training Academy.	
33	Ganesh Chandra Chakrabarti (E)	I
34	Nistatosh Datta (E)	II
	Bagdebitala Namasudra U. P.	
35	Madhu Sadhan Ghose (E)	II
	Gayerpore Board U. P.	
36	Sudhir Kumar Pramanik (E)	II
	Sutragarh Training Academy.	
37	Kumari Jogmaya Bhattacharji (E)	I
	Hijuly U. P.	
39	Ajit Kumar Gupta (E)	II
	Purbanagar Board U. P.	
40	Khagendra Nath Halder (E)	I
	Pakhiura U. P.	
42	Sudha Santosh Sadhukha (E)	II
	Ghosepara Saraswati U. P.	
43	Bejoy Chandra Mallik (E)	II
	Umarpore U. P.	
45	Arjan Kumar Biswas (E)	I
46	Sambhoo Kumar Biswas (E)	II
	Madanpore U. P.	
47	Anil Kumar Sadhukha (E)	I
	Nasrapara U. P.	
48	Mahabir Chandra Chowdhury (E)	I
	Poradanga U. P.	
49	Gopal Chandra Mondal (E)	I
50	Madhu Sudan Biswas (E)	II
51	Krishna Chandra Mondal (E)	I
	Nawpara P. U. U. P.	
54	Jitendra Nath Sarkar (E)	I
55	Kalipada Mondal (E)	I
	Priyanagar U. P.	
56	Kartik Ch. Pramanik (E)	II
	Sutragarh Training Academy.	
59	Damugopal Gorai (E)	I
	Bagdebitala Namasudra U. P.	
60	Khitish Ch. Patro (E)	II
	Gayerpore Board U. P.	
61	Tarapada Pramanik (E)	I

Roll No.	Name.	Division.
	Ullasay U. P. Maktab.	
64	Fakir Uddin Dhabak (E) ..	I
	Purbanagar Board U. P.	
65	Md. Abdul Khalek (E) ..	I
66	Md. Samser Ali (E) ..	II
68	M. Muradulla (E) ..	I
	Chandmari U. P. Maktab.	
69	Mda Ersad Ali Mondal (E) ..	I
70	Md. Mabjel Ali Mondal (E) ..	I
71	Md. Fakir Ahmad Mistri (E) ..	II
72	Md. Abul Kasem Mondal (E) ..	I
	Tarinipore Nayantara U. P.	
74	Golam Rahman (E) ..	II
75	Azizul Huque (E) ..	I
76	Md. Ishaque (E) ..	I
	Humnipota U. P.	
77	Maktar Hossain Shaikh ..	I
	Chandpore U. P. Maktab.	
78	Eusuff Ali Mondal ..	II
	Amistala U. P. Maktab.	
79	Md. Altaf Hossain ..	II
	Anismali U. P.	
82	Ansaruddin Karikar ..	II
83	Maliar Rahman Karikar. ..	II
	Nasrapara U. P.	
85	Wahed Dafadar (E) ..	I
86	Jakorali Dafadar (E) ..	I
87	Noor Ali Dafadar (E) ..	I
	Bhabesh Chandra U. P.	
92	Momin Ali Mistri ..	II
	Bagdebitala Namasudra U. P.	
94	Rahamatulla Shaikh (E) ..	II
95	Tajembaksh Saikh (E) ..	II
	Chuadanga Centre.	
	Ramnagar Practising U. P.	
1	Harendra Nath Singh Roy (E) ..	I
2	Haridas Mukherjee (E) ..	II
	Krishnagunj Practising U. P.	
4	Ajit Kumar Das ..	I
	Samriddi Board U. P.	
5	Narendra Nath Acharjee (E) ..	II
	Shahpur Boalia U P.	
6	Sudhindra Mukherjee (E) ..	I
	Uthali U. P.	
7	Shyamapada Roy ..	II
8	Biswanath Biswas (E) ..	II
	Khantura Board U. P.	
9	Jagadish Chandra Chakravarty (E) ..	I
	Khenzura U. P.	
10	Jogajyoti Dutta (E) ..	I
11	Monoranjan Ghosh (E) ..	II
12	Tarak Nath Ghosh (E) ..	II
13	Bishnu Pada Pramanik (E) ..	II

Roll No.	Name.	Division.
	Kashipur U. P.	
15	Uma Pada Mukherjee (E) ..	I
	Dehati U. P.	
17	Santi Kumar Roy (E) ..	I
	Bansberia U. P.	
18	Nilima Biswas (E) ..	I
19	Subodh Chandra Sarkar (E) ..	I
20	Profulla Kumar Mittra (E) ..	I
	Alamdanga U. P.	
24	Ghana Shyam Missra (E) ..	II
	Kamlapur Practising U. P.	
25	Barun Kumar Moitra (E) ..	I
27	Netai Chandra Dutta (E) ..	I
	Ramnagar Practising U. P.	
28	Hari Pada Paul (E) ..	I
	Alukdia Board U. P.	
29	Hemanta Kumar Biswas (E) ..	II
30	Nandalal Das (E) ..	II
	Khantura Board U. P.	
31	Sailesh Kumar Biswas (E) ..	II
32	Rama Prosad Roy (E) ..	II
	Natipota U. P.	
35	Satya Ranjan Biswas (E) ..	I
36	Panchu Gopal Biswas (E) ..	II
37	Satya Ranjan Roy (E) ..	I
	Bagadi U. P.	
40	Hari Pada Biswas ..	II
	Phulbagadi U. P.	
41	Umananda Biswas (E) ..	II
42	Paresh Chandra Biswas (E) ..	II
	Kanainagar U. P.	
50	Narayan Chandra Biswas (E) ..	II
51	Barindra Nath Biswas (E) ..	II
	Alamdanga U. P.	
52	Ajit Kumar Biswas (E) ..	I
53	Anil Kumar Biswas (E) ..	I
	Bagadi U. P.	
56	Monoranjan Nath (E) ..	I
	Phulbagadi U. P.	
57	Bishnu Pada Nath (E) ..	II
	Gokulkhali U. P.	
58	Bholanath Paul (E) ..	I
	Bagadi U. P.	
59	Ajit Kumar Biswas (E) ..	II
	Kamlapur Practising U. P.	
60	Balaram Saha (E) ..	I
61	Mahadev Biswas (E) ..	I
	Krishnagunj Practising U. P.	
63	Abdul Gani Mandal ..	II

Roll No.	Name.	Division.
	Bishnupur U. P.	
64	Nabi Bux Biswas (E)	II
65	Rahim Bux Mandal (E)	II
	Khongura U. P.	
67	Ibrahim Karikar (E)	I
	Bansboria U. P.	
69	Tasimoddin Ahmed (E)	I
70	Ahmed Hayet Ali Baksha (E)	I
	Uthali Board U. P.	
72	Bisharatullah Mandal (E)	I
	Batiapara U. P. Maktab.	
73	Md. Fazlar Rohman (E)	II
	Kanainagar U. P.	
74	Md. Mahasin (E)	I
75	Md. Harajuddin (E)	II
	Kamlapur Practising U. P.	
76	Samserali Mandal (E)	II
77	Bisarat Ali Mandal (E)	II
78	Ansar Ali Malita (E)	II
80	Rahim Bux Biswas (E)	II
	Kushtia Centre.	
	Kushtia C. M. S. U. P.	
1	Gouranga Pramanik (E)	I
2	Gourisankar Dobey (E)	I
4	Gourisankar Dutta (E)	II
	Janipur U. P.	
5	Gurupada Saha (E)	II
6	Chittaranjan Poddar (E)	I
	Kaya Board U. P.	
12	Rabindra Nath Biswas (E)	II
13	Ram Gopal Acharyya (E)	I
	Santoshpur U. P.	
14	Matilal Pramanik (E)	II
	Osmanpur Board U. P.	
16	Nirmal Kumar Nandy (E)	I
	Edrakpur Board U. P.	
17	Sunil Kumar Ghosh (E)	I
	Dang Bagwan Board U. P.	
19	Harendra Nath Ghosh (E)	I
	Pakuria U. P.	
21	Nripendra Nath Munshi (E)	II
	Angdia Sadarpur U. P.	
22	Satyendra Nath Raha (E)	II
23	Hazrapada Basu (E)	II
	Bahadurpur U. P.	
27	Jitendra Nath Kundu (E)	II
	Allardarga C. M. S. U. P.	
31	Niranjan Kumar Nath (E)	I
32	Bishnupada Svarnakar (E)	I

Roll No.	Name.	Division.
	Baragandia Board U. P.	
33	Aswini Kumar Sarkar (E)	I
	Bheramara Board U. P.	
34	Haribhakta Haldar (E)	I
	Dang Bagwan Board U. P.	
35	Sudhir Kumar Mandal (E)	I
	Durbachara U. P.	
36	Raghunath Biswas (E)	I
37	Bishnupada Biswas (E)	II
	Hashimpur U. P.	
38	Anil Chandra Das (E)	I
	Osmanpur Board U. P.	
39	Gakul Chandra Biswas (E)	I
	Kaya Board U. P.	
40	Manindranath Haldar (E)	I
	Santoshpur U. P.	
41	Buddhiswar Biswas (E)	I
42	Manindra Nath Das (E)	I
	Allardarga C. M. S. U. P.	
43	Samuel Subrata Kumar Biswas (E)	I
	Santoshpur U. P.	
46	Md. Abdus Sattar (E)	I
	Sastipur U. P.	
49	Md. Dabiruddin Munshi (E)	II
	Kaya Board U. P.	
51	Md. Saadat Husain Mian	II
52	Md. Mobarakali Mian	II
53	Md. Akbar Ali (E)	I
	Osmanpur Board U. P.	
54	Shah Jahan Ali Joardar (E)	II
55	Muazzem Husain Mian (E)	II
	Baniakhari U. P. Maktab.	
56	Abul Husain Molla (E)	II
	Hashimpur U. P.	
59	Khondkar Abdul Gafur (E)	I
	Biharia U. P. Maktab.	
60	Md. Abdul Gafur (E)	I
	Aruapara U. P. Maktab.	
62	Adam Ali Shaikh (E)	II
63	Munawar Ali Shaikh (E)	I
64	Ahmad Ali Shaikh	II
	Ambaria U. P. Maktab.	
65	Md. Ashraf Ali Khan (E)	I
66	Md. Tafazzal Husain (E)	II
67	Md. Hirajtullah Mondal	I
68	Md. Akbar Ali Shaikh (E)	I
	Daulatkhali U. P. Maktab.	
69	Md. Enamul Hoq (E)	I
70	Md. Abdul Basot	I

Roll No.	Name.	Division.
	Hatos Haripur U. P.	
72	Khaliluddin Ahmad (E)	I
73	Faizuddin Ahmad (E)	II
74	Shamsuddin Ahmad (E)	I
	Bheramara Board U. P.	
77	Md. Shahed Ali (E)	I
	Baragangdia Board U. P.	
79	Md. Abdul Gaffar (E)	II
80	Md. Lutfur Rahman (E)	I
	Khemidiar U. P.	
81	Md. Shujauddin (E)	I
82	Md. Iman Ali (E)	I
	Allardarga C. M. S. U. P.	
83	Md. Mawlabaksh Mandal (E)	I
84	Md. Boizuddin Biswas (E)	II
	Pakuria U. P.	
85	Md. Yunusuddin (E)	I
86	Md. Mallik Husain (E)	II
87	Md. Shariatullah (E)	II
88	Md. Kaptan Ali	II
89	Md. Solaiman (E)	II
90	Md. Rahim Baksh	II
	Khadimpur U. P.	
91	Md. Jaafarali (E)	I
94	Md. Khodabaksh (E)	II
	Chandipur U. P.	
97	Afsar Ali Mollah (E)	II
	Pragpur U. P.	
98	Muzammel Hoq Biswas (E)	II
101	Muzaffarali Mian (E)	II
	Angdiasadarpur U. P.	
102	Samiruddin Shaikh (E)	II
	Garbari U. P.	
104	Md. Azizul Hoq (E)	I
	Allardarga C. M. S. U. P.	
107	Satrajit Mandal (E)	I
	Meherpur Centre	
	Karuigachhi Board U. P.	
1	Monomohan Biswas (E)	I
	Salua C. M. S. U. P.	
2	Anil Biswas	I
3	Kripamay Biswas	I
	Amjhupi U. P.	
4	Nitya Gopal Biswas (E)	I
5	Nalinimohan Biswas (E)	I

Roll No.	Name.	Division.
	Pirojpur U. P.	
7	Sahadeb Pal	II
8	Devendra Kumar Bain	II
	Monakhali U. P.	
9	Ramchandra Biswas (E)	II
10	Kalipada Das Bairagya (E)	II
	Kustia U. P.	
11	Khagendranath Biswas	II
	Hanspukur U. P.	
12	Kinkar Kumar Biswas (E)	II
	Gopinathpur U. P.	
13	Sibendra Kumar Biswas (E)	I
	Bara Chandghor U. P.	
14	Dharmadas Biswas (E)	II
	Raghunathpur U. P.	
15	Nanipada Biswas (E)	I
16	Banamali Biswas (E)	I
17	Shyamapada Biswas (E)	II
	Natipota U. P.	
18	Shyamapada Biswas (E)	I
19	Tincari Biswas (E)	I
20	Niranjan Kumar Mandal	I
21	Karunamay Mondal (E)	I
	Chechania U. P. Maktab.	
22	Santosh Kumar Sircar (E)	I
23	Nirendranath Biswas (E)	I
25	Aswini Kumar Biswas (E)	I
26	Sudhir Kumar Biswas (E)	I
27	Biharilal Nandi (E)	I
	Hogolberia U. P.	
28	Bijoy Krishna Sircar (E)	I
29	Tarakeswar Bhowmic (E)	I
	Kazipur U. P.	
30	Nagendra Nath Upadhaya (E)	I
31	Hemanta Kumar Biswas	II
	Badiapara U. P.	
36	Gopal Chandra Kumar (E)	II
	Karimgachhi Board U. P.	
39	Balaram Mondal (E)	II
	Monakhali U. P.	
40	Pasupati Pal	II
	Gourinagore U. P.	
42	Nripendra Nath Ghose (E)	II
	Kustia U. P.	
43	Bankim Chandra Nandan (E)	II

Roll No.	Name.	Division.
	Hanspukur U. P.	
44	Kalipada Pramanic (E)	I
45	Saroj Kumar Dutt Barma (E)	I
	Barnia U. P.	
46	Ramkrishna Mukerji (E)	I
47	Susil Kumar Ghose (E)	I
48	Anandakisore Ghose Chaudhury (E)	II
	Gopinathpur U. P.	
49	Sudhir Kumar De	II
50	Annada Kumar De	II
	Barachandghar U. P.	
51	Kanailal Modak (E)	I
52	Manoranjan Banerji (E)	II
	Chechania U. P. Maktab.	
53	Kisori Mohan Ghose (E)	I
	Fazilnagore U. P. Maktab.	
54	Anil Kumar Sil	II
	Badiapara U. P.	
55	Prathama Ranjan Roy Chaudhury	I
	Bhitarpara U. P. Maktab.	
58	Dulal Chandra Mandal (E)	I
	Palsunda Board U. P.	
59	Md. Chainuddin (E)	I
	Karuigachhi Board U. P.	
60	Md. Khoda Newaj (E)	I
61	Abdur Rashid Biswas (E)	II
	Amjhupi U. P.	
64	Sheikh Serajul Huq (E)	I
	Chandbil U. P.	
68	Sofatulla Biswas	II
	Porojpur U. P.	
69	Hurmatali Mir	II
70	Abdul Wahed Mir (E)	II
	Gourinagore U. P.	
71	Md. Eshakh Mian (E)	II
73	Fazlat Hossain Biswas (E)	II
	Hanspukur U. P.	
74	Sheikh Basiruddin (E)	II
75	Sheikh Marfat Ali (E)	II
	Barnia U. P.	
76	Md. Pearuddin (E)	II
77	Md. Akkas Ali (E)	II
	Gopinathpur U. P.	
78	Abu Abdulla	II
	Barachandghor U. P.	
79	Bazlul Huq Ukil (E)	I
80	Marfat Ali Sheikh (E)	II
	Govindapur U. P.	
81	Md. Kesmatali Biswas (E)	I
82	Zarmonali Mondal	II
83	Amiruddin Mondal (E)	II

Roll No.	Name.	Division.
	Raghunathpur U. P.	
85	Shamsuddin Sheikh (E)	II
	Jitpur U. P.	
86	Md. Jobed Ali (E)	II
	Brahmanpara U. P. Maktab.	
87	Md. Monuruddin (E)	I
88	Md. Shamsuddin (E)	II
	Mominpur U. P. Maktab.	
91	Md. Bellal Hossain (E)	I
92	Md. Daud Ali (E)	I
	Bhitarpara U. P. Maktab.	
93	Md. Hedaitulla (E)	I
94	Salcha Khatun	II
	Chechania U. P. Maktab.	
95	Md. Osman Ali (E)	I
96	Md. Nurul Huq (E)	I
97	Md. Golam Rasul	II
98	Nurmohammad Molla (E)	I
99	Md. Azizur Rahman (E)	I
100	Fakir Mohammad Biswas	I
101	Md. Abdul Jabbar	II
102	Md. Nazar Ali	II
103	Md. Fazl Karim (E)	I
	Sahebnagore U. P. Maktab.	
107	Md. Abdul Gafur Sirdar (E)	I
108	Karim Baksh Mondal (E)	II
	Bhatpara U. P.	
111	Nihajuddin Mian	II
	Hogolberia U. P.	
112	Md. Azizul Huq (E)	II
	Badiapara U. P.	
116	Haresuddin Biswas	II
	Joyrampur U. P.	
117	Mohammad Ali Mian	II
118	Qannain Ahmad	II
120	Nazimali Mir (E)	I
	Merherpur Mukherjeepara U. P.	
121	Durgaprasad Kundu (E)	I
122	Shibadas Bhattacharyya (E)	I
123	Shyamapada Datta (E)	I
124	Bhupendra Nath Mukherjee (E)	II
	Patashipara Practising U. P.	
125	Monoranjan Mondal	I
126	Haroram Bairagya (E)	I
127	Ranjit Kumar Datta (E)	I
128	Nrityagopal Dutta (E)	II
	Santirajpur C. M. S. U. P.	
129	Trigunananda Bhattacharyya (E)	I
130	Md. Abed Shaikh (E)	I
131	Md. Faizuddin Shaikh (E)	I
132	Upen Chandra Biswas (E)	I

K. AHMAD,
Inspector of Schools, Presidency Division.

Presidency Division.

40-1A, Free School Street, Calcutta, the 21st December 1934.

The following candidates have passed the Primary (Maktab) Final Examination, 1934 :—

(E) indicates that the candidates have passed in English.

Roll No.	Name.	Division.
	District Murshidabad.	
	Berhampore Centre.	
	Berhampore F. P.	
1	Durga Shankar Thakur (E)	I
2	Gourdas Bose (E)	I
3	Baluknath Das (E)	I
4	Ajit Kumar Mukherjee (E)	I
5	Oramba Chandra Das (E)	I
6	Gobinda Gopal Dutt (E)	I
7	Balaram Chakravarty (E)	I
9	Bimal Chandra Moitra (E)	I
10	Brojo Gopal Karmakar (E)	I
11	Asit Kumar Sarkar (E)	I
	Khagra F. P.	
12	Rajendra Nath Samajdar (E)	I
13	Nikhil Chandra Bhaduri (E)	I
14	Sadananda Sanyal (E)	I
16	Kamalaranjan Banerjee (E)	II
17	Bibhutibhushan Chakraverty (E)	I
18	Rothindra Mohan Banerjee (E)	II
21	Radhanath Bhattacharya (E)	I
22	Apararanjan Das (E)	I
23	Radhashyam Saha (E)	I
28	Adhir Kumar Kundu (E)	II
	Saidabad F. P.	
29	Chittaranjan Bagchi (E)	I
30	Amarnath Bag (E)	I
31	Ranjit Kumar Das (E)	I
32	Amar Kumar Mukherjee (E)	I
	Pareshnathpur Board U. P.	
33	Nityanandadas Bairagya (E)	II
	Ghoramara Board U. P.	
34	Sudhir Kumar Pramanik	I
	Bhabta U. P.	
35	Ajitananda Chatterjee	I
36	Sudhir Kumar Saha (E)	I
37	Narayan Chandra Nandi	I
	Narikelbari U. P.	
38	Kanai Sundar Thakur (E)	I
39	Indoo Bhusan Thakur (E)	II
	Sankarpur U. P.	
42	Golakendra Chakravarty	I
	Sargachi U. P.	
48	Chandra Bhusan Pal (E)	I
	Madhupur U. P.	
50	Profulla Kumar Khan	I
	Napukuria U. P.	
53	Doman Chandra Bhattacharya (E)	I
	Gobindapur U. P.	
57	Kshitish Ch. Pramanik (E)	I
	Raipur U. P.	
58	Kanailal Ghosh	II
59	Ajit Kumar Ghosh	II
	Sarbangapur U. P.	
60	Kshitish Ch. Chakravarty (E)	I
	Kasimbazar F. P.	
61	Kaliprosad Chatterjee (E)	I
	Gorabazar F. P.	
62	Sanat Kumar Bairagi (E)	I
63	Shibdas Ghosh (E)	I
64	Sudhir Kumar Saha (E)	II
65	Satya Narayan Saha (E)	I
	Gorabazar L. M. S. U. P.	
66	Nrishingha Murari Chatterjee (E)	II
67	Madan Mohan Das (E)	II
	Satni U. P.	
70	Bibhuti Bhusan Mondal (E)	II
71	Sudhir Kumar Sarkar (E)	II
	Bachra U. P.	
72	Lakshman Chandra Mondal	I
73	Naba Kumar Mondal	I
74	Gurudas Pal	I
	Tungi U. P.	
77	Syamapada Das (E)	I
78	Sudhir Kumar Roy (E)	I
	Benadah U. P.	
81	Ajit Kumar Malakar (E)	I
82	Baidyanath Ghosh (E)	I
83	Nitai Chandra Ghosh (E)	II
84	Sudarsan Ch. Pramanik (E)	II
	Narikelbari U. P.	
85	Narayan Chandra Saha (E)	I
	Kaliganj U. P.	
87	Bibhuti Bhusan Majumdar (E)	I
	Jalangi U. P.	
88	Nishi Kanto Datta (E)	II
	Bhabta U. P.	
90A	Bidya Prasad Nandi	II
	Berhampore Free Primary.	
91	Sivapada Mondal (E)	I
	Khagra Free Primary.	
93	Nagendranath Biswas (E)	I
	Saidabad F. P.	
94	Nanigopal Mondal (E)	I
	Ghoramara Board U. P.	
97	Anil Kumar Biswas	II
98	Ahi Bhusan Haldar	I
	Bhabta U. P.	
99	Gobinda Chandra Haldar (E)	I
100	Prafulla Kumar Biswas (E)	I
101	Ushapati Saha (E)	I
102	Sanatan Hazra (E)	II

Roll No.	Name.	Division.
	Narikelbari U. P.	
103	Anadi Nath Saha (E) ..	II
	Kumarpur U. P.	
105	Bibhuti Bhusan Nath (E) ..	II
106	Nripendranath Nath (E) ..	II
	Chaitanyapur U. P.	
107	Pham Bhusan Biswas (E) ..	I
108	Kalidas Mondal (E) ..	II
109	Rampati Mondal (E) ..	I
110	Brahma Narayan Nath (E) ..	II
112	Dhanapati Mondal (E) ..	II
113	Nanigopal Biswas ..	II
114	Aswini Kumar Biswas ..	I
	Gobindapur U. P.	
116	Tarapada Biswas (E) ..	II
117	Jharendra Nath Mondal (E) ..	I
118	Brindaban Chandra Sarkar (E)	I
	Saruppur U. P.	
119	Sitanath Sarkar ..	I
120	Niranjan Biswas ..	I
121	Mahimaranjan Biswas ..	I
122	Aswini Kumar Das ..	II
	Kasimbazar F. P.	
124	Brahma Pada Bagdi (E) ..	I
125	Niranjan Mondal ..	II
	Bachra U. P.	
126	Jadunandan Mallick ..	I
127	Raghunandan Mallick ..	I
	Nowda U. P.	
128	Sarat Chandra Biswas ..	I
	Tungi U. P.	
129	Anil Kumar Biswas (E) ..	II
130	Umapada Biswas (E) ..	II
132	Manmathanath Nath (E) ..	II
	Benadah U. P.	
134	Lakshminarayan Mondal (E) ..	II
	Brindabanpur Board U. P.	
135	Ramkrishna Biswas (E) ..	II
	Kaliganj U. P.	
136	Kamala Kanta Mondal (E) ..	II
	Berhampore F. P.	
137	Ainul Haque (E) ..	I
	Pareshnathpur Board U. P.	
138	Sk. Kalimuddin Mondal (E) ..	II
139	Sk. Nifazuddin Mondal (E) ..	II
	Bhabta U. P.	
140	Sk. Md. Anwar Hossain (E) ..	I
141	Md. Golam Ambia (E) ..	I
	Narikelbari U. P.	
143	Jafruddin Shaik (E) ..	I
	Kumarpur U. P.	
144	Sk. Abdur Rashid (E) ..	II
145	Sk. Abul Hossain (E) ..	I
146	Sk. Abdur Rahman (E) ..	II

Roll No.	Name.	Division.
	Mirzapur U. P.	
150	Sk. Nowser Ali (E) ..	II
	Napukuria U. P.	
153	Md. Jamiruddin Shaik ..	I
	Dadpur U. P.	
154	Rajabali Shaik ..	I
	Saruppur U. P.	
156	Kalimuddin Halsana ..	I
157	Laskar Saha ..	II
	Sarvangapore U. P.	
158	Ksheder Baksh Malita (E) ..	II
	Kasimbazar F. P.	
159	Sanwer Ali Mandal (E) ..	II
	Gorabazar F. P.	
163	Jainal Shaik (E) ..	II
	Gorabazar L. M. S. U. P.	
164	Syed Anwar Hossain (E) ..	I
165	Syed Maimud Hossain (E) ..	II
	Hoglardari U. P.	
176	Sabdul Rahman Biswas (E) ..	I
	Jalangi U. P.	
177	Fakir Muhammad Mondal ..	I
	Brindabanpur Board U. P.	
178	Md. Abdul Karim Biswas (E) ..	II
	Trimohini U. P. Maktab.	
182	Muhammad Amiruddin Shaikh (E)	I
183	Muhammad Tamiruddin Mandal (E)	I
	Bhaduriapara U. P. Maktab.	
185	Muhammad Abul Hasan ..	I
186	Muhammad Obaidulla (E) ..	I
187	Muhammad Wali Waled (E) ..	II
	Chandpur U. P. Maktab.	
188	Muhammad Abdur Rashid (E) ..	I
189	Muhammad Emran Hossain (E) ..	I
190	Muhammad Abdul Karim (E) ..	I
191	Muhammad Amiruddin (E) ..	I
192	Muhammad Ramzan Ali (E) ..	I

Murshidabad Centre.

	Lalitakuri U. P.	
1	Bipad Bhanjan Ray ..	II
	Nasipur K. B. U. P.	
2	Anukul Chandra Ghosh (E) ..	I
	Akheriganj U. P.	
3	Jogesh Chandra Banarji (E) ..	I
6	Pramathanath Das (E) ..	II
	Ramnagar U. P.	
10	Dwija Pada Chakravarty ..	II
	Asariadaha U. P.	
11	Dharam Chand Sonar (E) ..	II

Roll No.	Name.	Division.
	Radhakantapur U. P.	
12	Ramanath Sinha (E) ..	I
13	Malin Chandra Sinha (E) ..	I
14	Kali Pada Sinha (E) ..	II
	Taranagor U. P.	
16	Shibendu Shekhar Sarkar (E) ..	I
	Paramhansa Free Vidyapith U. P.	
17	Radha Gopal Datta (E) ..	I
	Nasipur Pansala U. P.	
22	Mriganka Shekhar Nandi (E) ..	I
	Bagor U. P.	
23	Harendra Kumar Mandal (E) ..	I
24	Dwijapada Pal (E) ..	II
	Pashla U. P.	
29	Kamala Pati Ray ..	I
	Rainda U. P.	
30	Sripati Bhusan Mandal (E) ..	I
31	Sasthiram Mandal ..	II
	Singar U. P.	
35	Shiba Charan Saha ..	I
	Ishanpur U. P.	
37	Renu Pada Mandal ..	II
	Hajibilidanga U. P. Maktab.	
43	Umakanta Datta (E) ..	I
	Bhagwanpur U. P.	
50	Gayanath Bahalia ..	I
	Bamnabad (Lalkup) U. P.	
54	Minati Sarkar (E) ..	I
55	Narendra Nath Mandal (E) ..	II
	Paramhansa Free Vidyapith U. P.	
58	Surendranath Haldar (E) ..	I
	Rainda U. P.	
60	Shyama Pada Mandal (I) (E) ..	I
61	Shyama Pada Mandal (II) (E) ..	I
62	Bibhuti Bhushan Mandal (E) ..	II
	Singar U. P.	
64	Shambhunath Majhi ..	II
	Hajbibidanga U. P. Maktab.	
66	Ramnath Mandal (E) ..	I
	Akheriganj U. P.	
67	Abdur Rahman (E) ..	II
	Anantapur U. P.	
69	Manir Uddin Shaikh ..	II
70	Abdus Sattar Mandal ..	II
	Pashla U. P.	
71	Estafan Shaikh ..	I
	Rainda U. P.	
72	Khoda Baksh Shaikh (E) ..	II

Roll No.	Name.	Division.
	Diarmanikchak U. P.	
74	Abdus Sattar Sarkar (E) ..	I
	Habaspur U. P.	
75	Golenur Bibi ..	II
76	Sabiar Rahman ..	I
	Lalitakuri U. P.	
78	Md. Mosleh Uddin Sarkar ..	I
	Bansgara U. P.	
82	Abdul Ghani Chowdhuri (E) ..	I
	Ramchandrapur U. P.	
85	Serajul Islam (I) ..	II
86	Ayjuddin ..	I
87	Wajid Ali ..	I
88	Sabior Rahman ..	I
89	Tayab Ali ..	II
90	Firaj Mahammad ..	II
91	Serajul Islam (II) ..	II
	Bhagwanpur U. P.	
92	Md. Yasin Ali ..	II
93	Abdur Rahman ..	II
	Balutungi F. P.	
94	Ata-ul Haque (E) ..	I
	Nasipur K. B. U. P.	
98	Dost Mahammad (E) ..	I
99	Sadiar Rahman (E) ..	I
100	Mahiuddin (E) ..	I
101	Wahed Ali (E) ..	I
102	Ayejuddin (II) (E) ..	I
103	Solaiman (E) ..	II
	Akheriganj U. P.	
104	Saber Ali Sarkar (E) ..	II
105	Imam Hossain Shaikh (E) ..	I
	Airmari U. P.	
107	Serajul Islam (III) (E) ..	I
	Bonsi U. P.	
110	Kafiluddin Sarkar (E) ..	I
111	Kobad Ali Shaikh (E) ..	I
	Ramnagor U. P.	
112	Md. Ismail Shaikh ..	I
	Asariadaha U. P.	
113	Jakimuddin Sarkar (I) (E) ..	I
114	Wajed Ali Sarkar (E) ..	I
115	Jakimuddin Sarkar (II) (E) ..	II
116	Kasimuddin Sarkar (E) ..	II
117	Abdus Samad Biswas (E) ..	II
118	Abdul Khalek (E) ..	II
	Radhakantapur U. P.	
119	Rajuddin Biswas ..	I
	Chakharpara U. P.	
120	Shaikh Ismail ..	II
121	Shaikh Jahiruddin ..	II
122	Shaikh Rahatulla (E) ..	II
124	Shaikh Solaiman ..	II

Roll No.	Name.	Division.
	Taraiagor U. P.	
125	Md. Imdad-ul Haque (E)	I
126	Lalmahammad (E)	I
127	Md. Sonaulla (E)	I
128	Abdul Latif (E)	II
130	Badaruddin Ahmed (II) (E)	II
	Bamnabad Lalkup U. P.	
134	Md. Imamuddin Mandal (E)	I
	Nasipur Pansala U. P.	
136	Hafezuddin Biswas	II
	Chhaitani U. P.	
138	Samser Ali	II
139	Wasimuddin Ahmed (E)	I
	Jagirpara U. P. Maktab.	
140	Mahammad Abdul Aziz (E)	I
141	Meseruddin Ahmed (E)	I
142	Mahammad Akhardi Shaikh (E)	II
143	Syenuddin Ahmed (E)	II
144	Mahammad Abdul Manan Mian (E)	I
	Bagdanga U. P. Maktab.	
147	Jasimuddin Ahmed (E)	I
	Baligram U. P. Maktab.	
151	Osman Shaikh	II
152	Osman Shaikh	II
	Hejbibidanga U. P.	
155	Mahammad Daud Hosain (E)	I
156	Mahammad Anisar Rahman (E)	I
	Achra U. P. Maktab.	
159	Shaikh Saber Ali (E)	I
	Jalibagan U. P. Maktab.	
160	Mahammad Najar Ali (E)	I
161	Mahammad Lutfar Rahman (E)	I
	Kandi Centre.	
	Malihati Practising U. P.	
1	Monochora Das	I
2	Shambhunath Thakur	I
3	Parbatisanker Banerjee	I
4	Nityananda Das	II
	Kandi Practising U. P.	
5	Annodagopal Das	I
	Satitora U. P.	
6	Mohadeb Chandra Dey	I
	Baghdanga U. P.	
7	Abhimonyu Ghosh (E)	II
	Bahara U. P.	
8	Shiba Shankar Ghosh (E)	I
9	Radhakanta Chandra (E)	I
10	Krishnagopal Ghosh (E)	II
11	Shashanka Shekhar Sarkar (E)	II
	Bahadurpur U. P.	
12	Kanailal Ghosh	I
	Ghoshpara U. P.	
14	Kanailal Pal	I
15	Adhirkumar Ghosh	II

Roll No.	Name.	Division.
	Ratuni U. P.	
16	Bamapada Chandra	I
17	Sakshigopal Pal	II
	Chaitpur U. P.	
18	Jaharlal Ghosh (E)	I
19	Bhaktibhushan Dhar (E)	I
20	Satyagopal Roy Chowhudry (E)	II
	Rangabali U. P.	
23	Labanyagopal Ghosh	II
	Muniadihi U. P.	
25	Nakari Das (E)	I
26	Radhapada Chatterjee (E)	I
27	Nirmal Kanti Ruj (E)	I
28	Bhakti Bhushan Dhar (E)	I
29	Tulshi Charan Mukherjee (E)	I
30	Durga Charan Dhar (E)	I
32	Rebati Mohan Dhar (E)	II
	Kuli U. P.	
33	Lakshmi Kanta Pramanik	II
	Mamudpur U. P.	
34	Asitanandon Pal	II
36	Gourhari Pramanik	II
	Maliandi Free U. P.	
38	Bhogirath Roy (E)	II
39	Ramgati Ghosh (E)	I
	Amlai U. P.	
41	Dukari Bhushan Dey E)	I
42	Nirode Kumar Pal (E)	II
	Goyeshpur U. P.	
43	Dharanidhar Dutta	I
44	Madan Mohan Mondal	II
45	Gadadhar Acharjya	I
46	Gouranga Sundar Chandra	II
	Rajhat U. P.	
47	Jangaleswar Pal (E)	I
48	Atul Krishna Roy (E)	I
49	Ram Ranjan Chatterjee (E)	I
	Panchthupi S. C. Free U. P.	
50	Aswini Kumar Chakraverty (E)	I
51	Shushil Kumar Dhara (E)	I
52	Tarapada Ghosh (E)	I
53	Kali Kinkar Dey (E)	II
54	Mriganka Shekhar Bhattacharjee (E)	II
55	Bhujanga Bhushan Chatterjee (E)	II
56	Birendranath Ghosh Hajra (E)	I
57	Shashanka Shekhar Ghosh (E)	I
	Rasora U. P.	
58	Jagananda Chatterjee	I
59	Rudra Kumar Chatterjee	II
60	Ardhendu Karmakar	I
61	Anadi Nath Pal	I
62	Balaram Pal	I
63	Sarbottom Singha Chowdhury	II
	Singhari U. P.	
64	Mritunjoy Dutta (E)	I
65	Ram Kanu Mukherjee (E)	I
66	Madan Mohan Dutta (E)	I
67	Chandi Charan Dutta (E)	II
68	Surendra Nath Ghosh (E)	I

Roll No.	Name.	Division.
	Kalyanpur U. P.	
69	Birendra Nath Chatterjee ..	I
70	Anil Kumar Mukherjee ..	I
71	Manahar Mondal ..	II
72	Tara Kumar Das ..	I
	Malihati Practising U. P.	
80	Balaram Saha ..	II
	Kandi Practising U. P.	
81	Nalinaksha Pal ..	I
	Rohigram U. P.	
82	Kartikpada Majhi (E) ..	I
	Baghdanga U. P.	
83	Sudhansu Bhushan Saha (E) ..	I
	Bahara U. P.	
84	Moheswar Das (E) ..	I
	Chaitpur U. P. —	
85	Pashupati Saha (E) ..	I
	Rangabati U. P.	
86	Lakshman Ch. Mondal ..	II
87	Jagannath Nath ..	II
	Muniadihi U. P.	
88	Kamala Kanta Saha (E) ..	I
	Kuli U. P.	
89	Jognath Nath (E) ..	I
90	Rampada Saha (E) ..	I
	Kasiadanga U. P.	
92	Radhashyam Saha (E) ..	I
93	Mahadeb Saha (E) ..	I
	Rajhat U. P.	
94	Lakshmi Narayan Das (E) ..	I
95	Kedarnath Das (E) ..	I
	Panchthupi S. C. Free U. P.	
97	Nakari Sardar (E) ..	II
	Rasora U. P.	
98	Baidyanath Paik ..	I
	Kandi U. P.	
99	Shribash Dutta ..	I
	Gaful U. P.	
101	Bijoynondon Chowdhury ..	I

Roll No.	Name.	Division.
	Rohigram U. P.	
102	Shaikh Monjur Ahmed (E) ..	I
	Baghdanga U. P.	
103	Mir Moslem Ali (E) ..	II
	Chaitpur U. P.	
106	Md. Sobedar Khan (E) ..	I
107	Molla Abdur Rahaman ..	I
108	Abdul Khalil Shaikh ..	I
109	Mokarem Khan (E) ..	I
110	Shaikh Golam Mustafa (E) ..	I
	Muniadihi U. P.	
111	Abdul Bari Molla (E) ..	I
112	Abdul Hamid (E) ..	I
113	Shaikh Allah Rakha (E) ..	I
114	Altaf Hossain (E) ..	I
	Kuli U. P.	
115	Shaikh Jerban (E) ..	I
116	Ohab Mirja (E) ..	I
117	Abdus Sattar Shaikh (E) ..	I
118	Rostam Shaikh (E) ..	I
	Kasiadanga U. P.	
119	Hadiozzaman (E) ..	II
	Masandi U. P.	
121	Shamsul Alam (E) ..	I
122	Ahmed Roza (E) ..	II
	Sadol U. P.	
124	Shaikh Moniruddin Ahmed (E) ..	I
125	Shaikh Anisar Rahaman (E) ..	I
	Panchthupi S. C. Free U. P.	
127	Jahidar Rahaman (E) ..	I
128	Nabibar Hossain (E) ..	I
129	Abul Quasem (E) ..	I
130	Khondakar Abdul Wahed (E) ..	I
131	Shaikh Abdul Odud (E) ..	II
132	Mollik Golam Ghani (E) ..	I
133	Shaikh Golam Quasem (E) ..	I
134	Shaikh Golam Mustafa (E) ..	II
	Syedpara U. P. —	
135	Anisar Rahaman ..	I
	Binodia U. P.	
137	Mir Abdul Hali (E) ..	II
138	Syed Ali Taher (E) ..	II
	Solepara U. P. Maktab.	
144	Muhammad Manwar Hossain ..	II
145	Muhammad Kafatulla Shaikh ..	I
146	Muhammad Amir Hamza Shaikh ..	I
148	Muhammad Raihan Shaikh ..	II
	Karandi U. P. Maktab.	
149	Muhammad Abu Bakr (E) ..	I

Roll No.	Name.	Division.
	Jangipur Centre.	
	Monigram Practising U. P.	
1	Adya Prosanna Ganguli	II
3	Ranjit Kumar Khamaru	II
	Beniagram U. P.	
5	Hari Mohan Sinha (E)	I
6	Turan Chandra Sinha (E)	I
	Kayur U. P.	
7	Uma Kanta Saha (E)	I
	Dohal U. P.	
9	Kamaleswar Karmakar (E)	I
10	Pinaki Nath Ghose (E)	I
11	Nibirbasini Dasi (E)	I
	Jotkamal U. P.	
12	Arabindu Banerjee (E)	I
13	Sudhir Kumar Das (E)	II
	Chhapghati Board U. P.	
17	Bijoy Bhusan Paul (E)	I
	Kharibona U. P.	
18	Durga Prosanna Biswas (E)	II
20	Gonapati Sarkar (E)	I
21	Jagannath Datta (E)	I
22	Sudhir Kumar Dutta (E)	I
	Athna U. P.	
23	Haradhan Paul	I
24	Sasanka Sekhar Mandal	II
25	Rama Pada Karmakar	II
	Natunganj U. P.	
26	Sasadhar Pramanik (E)	I
27	Narendra Nath Saha (E)	I
	Mahadebnagar U. P.	
30	Baidyanath Ray (E)	I
	Karaiya U. P.	
33	Bholanath Dutta (E)	I
	Bangabari U. P.	
34	Aswinikumar Barik (E)	I
	Kumarthi U. P.	
35	Anilkumar Mukherjee (E)	I
36	Sachchidananda Banerjee (E)	II
	Malancha U. P.	
39	Panchanan Sinha (E)	II

Roll No.	Name.	Division.
	Dhanpatganj U. P.	
40	Jitendra Nath Ray	II
41	Kiriti Bhusan Dutta	II
	Labanchoa U. P.	
43	Shyma Pada Chakrabarty	I
	Monigram Practising U. P.	
44	Sumanya Das	I
	Kayur U. P.	
45	Monindra Nath Mal (E)	I
	Chhamugram U. P.	
46	Lakshmi Pada Mandal (E)	I
	Bhasaipakur U. P.	
49	Balaram Chandra Das	I
	Shibnagar Ataruddin U. P.	
50	Tinkari Chandra Das (E)	II
	Protapganj Practising U. P.	
51	Karuna Kanta Das	II
	Kayur U. P.	
52	Shambhu Nath Sarnakar (E)	I
	Jotkamal U. P.	
53	Binoy Kumar Mallik (E)	I
54	Bhajahari Das (E)	II
55	Goneshram Bhakat (E)	II
	Amlabari U. P.	
57	Manmatha Sardar	II
	Chhapghati Board U. P.	
58	Binoyendra Nath Das (E)	I
59	Nakfor Chandra Das (E)	II
	Bangabari U. P.	
60	Upendra Nath Das (E)	I
61	Bankaray Das (E)	I
62	Guru Pada Majhi (E)	I
63	Binoy Kumar Majhi (E)	I
64	Shibsagar Das (E)	II
	Kharibona U. P.	
65	Dhirendra Nath Das (E)	I
66	Repunjay Choudhury (E)	I
67	Bidhu Bhusan Das (E)	I
68	Dhanapati Das (E)	I
69	Pashupati Das (E)	I
70	Shambhunath Das (E)	I
71	Upendra Nath Mandal (E)	I
72	Jadunath Sarkar (E)	I
	Malancha U. P.	
73	Thakur Charan Das (E)	II
74	Digambar Mandal	II

Roll No.	Name.	Division.
	Giria U. P.	
75	Tinkari Mandal (E) ..	I
	Labanchoa U. P.	
76	Dwijendra Nath Das (E) ..	I
77	Harendra Nath Das (E) ..	I
78	Binoy Kumar Sarkar (E) ..	II
80	Chhakari Lal Sarkar (E) ..	I
81	Nirmal Chandra Das ..	II
82	Rajpati Das (E) ..	I
	Bhasaipakur U. P.	
83	Azhar Ali Biswas (E) ..	II
	Shibnagar Ataruddin U. P.	
85	Md. Abbas Ali (E) ..	I
86	Md. Ismail Choudhury (E) ..	II
87	Shamsuddin Ahmed (E) ..	I
89	Abdul Sahed (E) ..	II
90	Makbul Hossain (E) ..	II
91	Abdul Hakim (E) ..	I
92	Abdul Haque (E) ..	II
	Protapganj Practising U. P.	
93	Rashed Ali Mian ..	I
	Karaiya U. P.	
94	Golam Kibria Molla (E) ..	I
95	Golam Mostafa Molla (E) ..	I
96	Zakera Khatun (E) ..	II
	Beniagram U. P.	
97	Abdus Sattar (E) ..	I
98	Sham Mahammad Shaikh (E) ..	II
	Kayur U. P.	
99	Shaikh Abdul Mannan (E) ..	I
	Jotkamal U. P.	
103	Akali Biswas (E) ..	II
	Iswarchandrapur U. P.	
106	Md. Ansar Ali (E) ..	I
107	Md. Yasin (E) ..	I
108	Md. Moslem Hassain (E) ..	I
109	Md. Lutfal Haque (E) ..	I
110	Md. Wahed Ali (E) ..	I
111	Md. Azhar Ali (E) ..	I
	Harhari U. P.	
112	Farhat Choudhury (E) ..	I
113	Shaikh Safiuddin (E) ..	I
	Amlabar U. P.	
115	Maniruddin Ahmed (E) ..	I
	Kharibona U. P.	
119	Lakman Haque Mean (E) ..	I
120	Heras Mahammad (E) ..	I
121	Farzan Ali Shaikh (E) ..	I
122	Tafezal Haque (E) ..	I
123	Moslemuddin (E) ..	I
124	Shamser Nehar Nesa (E) ..	I
125	Jabedali Shaikh (E) ..	I
126	Rabbani Shaikh (E) ..	I

Ro No.	Name.	
	Athua U. P.	
128	Khariyatali Mandal ..	II
	Nowpara U. P.	
129	Abdur Rahman Biswas (E) ..	II
130	Abdus Sattar Biswas (E) ..	I
	Dhanpatganj U. P.	
133	Hafezali Shaikh ..	I
134	Md. Munsefali ..	I
135	Abdul Jabbar Molla ..	I
136	Nazemali Shaikh ..	II
	Labanchoa U. P.	
138	Eshaque Biswas (E) ..	I
139	Golab Mahammad Biswas (E) ..	I
140	Kasimuddin Biswas ..	II
141	Abdur Rajjak Biswas ..	I
	Ghazinagore U. P. Maktab	
142	Anisur Rahman Sheikh (E) ..	I
143	Shaib Ali Shaikh (E) ..	I
144	Niaz-uddin Shaikh (E) ..	I
	Mominpola U. P. Maktab.	
146	Afsar Ali Biswas (E) ..	I
	Kalupur U. P. Maktab.	
148	Muhammad Ali Amzed (E) ..	I
149	Daud Hossain (E) ..	I
150	Muhammad Herasuddin (E) ..	I
	Jialmari U. P. Maktab.	
151	Shaikh Md. Abdur Rahman Mahaldar (E)	I
152	Shaikh Muhammad Panjahan Mahaldar (E).	II
	Anupnagore U. P. Maktab.	
154	Jamiruddin Sheikh (E) ..	II
156	Shetabuddin Momin (E) ..	II
	Raiganja U. P. Maktab.	
157	Abdul Manan (E) ..	I
159	Muhammad Jobair (E) ..	I
160	Muhammad Saifuddin (E) ..	I
161	Muhammad Sakir (E) ..	I
	Aurangabad U. P. Maktab.	
162	Shaikh Abdul Gafur (E) ..	I
164	Shaikh Maniruddin (E) ..	I
	Dwipchandrapur U. P. Maktab.	
165	Mazed Ali Biswas (E) ..	II
166	Ershad Ali Khan (E) ..	I
167	Abdul Majid Biswas (E) ..	II
	Barasimul U. P. Maktab.	
171	Abdus Sattar (E) ..	II
172	Abu Bakr Siddique (E) ..	II

K. AHMAD, *Inspector of Schools.*

Orders by the Vice-Chancellor and Syndicate of the Calcutta University.

NOTICE.

Senate House, the 19th December 1934.

It is hereby announced for general information that a centre has been opened at Ghatal in the district of Midnapore for holding the Matriculation Examination, 1935, on usual conditions.

B. B. DUTT,

Controller of Examinations (offg.).

Calcutta University.

NOTICE.

Senate House, the 21st December 1934.

The Annual Convocation for conferring Degrees will be held at the Senate House, College Square, Calcutta, on Saturday, the 2nd March 1935.

Non-collegiate students, desirous of receiving their Diplomas at the Convocation, are requested to send in their names to the undersigned not later than the 31st of January 1935. Collegiate students are requested to communicate with the Principals of their Colleges forthwith, so that their names may be forwarded to this office by their respective Colleges within the 31st January 1935. *No name will be accepted after that date.*

J. CHAKRAVORTI, *Registrar.*

The examination of candidates for Muktarship in Mufassal Courts subordinate to the High Court of Judicature at Fort William, Bengal.

Calcutta, the 22nd December 1934.

The examination of candidates for Muktarship will be held at Calcutta, Gauhati and Sylhet on the 22nd and 23rd March next.

The examination of candidates for Calcutta will take place in the Senate House of the Calcutta University.

One Paper will be set each day for Muktarship candidates from 12 noon to 3 p.m. on the 22nd and 23rd March 1935.

In no circumstances will any candidate be admitted to the examination after these hours.

The candidates will be required to produce at the examination the extracts from the register which will be furnished to them by the District Judges through whom their applications have been sent to the Committee of Legal Education.

No candidate will be allowed to enter the examination room with any memoranda or loose paper of any description (with the exception of extracts).

All writing materials will be provided with the exception of pens which the candidates must bring with them.

B. K. MUKHERJEA,

Secretary, Committee of Legal Education,
High Court.

Registered No. C207

The Calcutta Gazette

THURSDAY, JANUARY 3, 1935.

PART II

Advertisements.

Notices.

Advertisements, Notices, etc., intended for insertion in this part of the Gazette cannot be received after noon on Saturday. All manuscripts and postal remittances must be addressed to Superintendent, Government Printing, Bengal Government Press, Alipore. For the convenience, however, of parties or firms located in Calcutta cash payments of Advertisement charges may be made at Publication Sales Office, Room No. 2, Ground Floor, Writers' Buildings, Calcutta.

Land Sale Notices.

Notification B.

NOTICE is hereby given, under sections 5 and 13 of Act XI of 1859, that unless the arrears (which were due on or before 31st Bhadra, 1341 B. S., of which the latest date of payment was on the 28th day of September 1934, and which will be due on or before 30th Agrahayan, 1341 B. S., of which the latest date of payment will be on the 12th day of January 1935) mentioned below are paid on or before the next latest date of payment, viz., the 12th January 1935, the undermentioned estates or shares of estates in the district of Khulna will be put up for sale at the office of the Collector of that district on the 26th March 1935, at 12 noon, for the said arrears.

When in columns 5, 7 and 9 of the following statement it is stated that only a share is to be sold, it is to be understood that a separate account is kept for that share :—

Tauzi No.	Name of mahal and pargana.	Sadar jama of whole estate.	Whether the whole estate is to be sold.	If only a share is to be sold, specification of such share or shares.	Names of proprietors of property to be sold.	If only a share is to be sold, the sadar jama of such share.	If the whole estate is to be sold, the arrears due from it.	If only a share is to be sold, the arrears due from it.
1	2	3	4	5	6	7	8	9
		Rs. a. p.				Rs. a. p.	Rs. a. p.	Rs. a. p.
1008	Lot No. 240 north portion, pargana Sundarbans.	3,932 0 0	Whole	....	Kamal Kamini Devi and others.	..	1,378 0 0	..
1009	Lot No. 240 middle portion, pargana Sundarbans.	3,681 0 0	Do.	....	Ditto ..	..	1,323 8 0	..
1010	Lot No. 240 south portion, pargana Sundarbans.	3,181 0 0	Do.	....	C. K. Nag and others	..	232 4 3	..

Khulna, the 21st December 1934.

S. BHATTACHARJI, *for* Collector.

Notification A.

NOTICE is hereby given, under sections 6 and 13, Act XI of 1859, that the undermentioned estates and shares of estates in the district of Rajshahi will be put for sale at the office of the Collector of that district on the 9th January 1935, at 12 noon, for arrears of revenue and other demands which by law are realizable as arrears of land revenue.

When in columns 5, 7 and 9 of the following statement it is stated that only a share is to be sold, it is to be understood that a separate account is kept for that share :—

Tauzi No.	Name of mahal and pargana.	Sadar jama of whole estate.	Whether the whole estate is to be sold.	If only a share is to be sold, specification of such share or shares.	Names of proprietors of property to be sold.	If only a share is to be sold, the sadar jama of such share.	If the whole estate is to be sold, the arrears due from it.	If only a share is to be sold, the arrears due from it.
1	2	3	4	5	6	7	8	9
		Rs. a. p.				Rs. a. p.	Rs. a. p.	Rs. a. p.
222 Ejmali.	Sibdebpara, pargana Tegachi.	2,515 9 0 Police— 25 10 0	No ..	7 as. 10 gds. share only. All other shares than that specified will be excluded from the sale.	Maulvi Chowdhury Mahamed Mazharul Haque and others.	1,179 3 0 Police— 12 0 0	..	L. R.— 208 12 9 Police— 0 9 0
222, S. A. No. 1.	Ditto ..	2,515 9 0 Police— 25 10 0	No ..	2 as. 10 gds. 1 c. 1 1/6 dt. 10 6/31 job share only. All other shares than that specified will be excluded from the sale.	Bibi Taheratan Nessa Unmatan Rafia Chowdhurani and others.	396 3 6 Police— 3 14 6	..	L. R.— 9 11 6
222, S. A. No. 2.	Ditto ..	2,515 9 0 Police— 25 10 0	No ..	4 annas share only All other shares than that specified will be excluded from the sale.	Bibi Hafezatan Nessa Unmatan Fatema Chowdhurani.	628 14 0 Police— 6 7 0	..	L. R.— 113 14 0
222, S. A. No. 5.	Ditto ..	2,515 9 0 Police— 25 10 0	No ..	10 gandas share only All other shares than that specified will be excluded from the sale.	Bibi Fatema Khatoon Chowdhurani, matwali.	78 9 9 Police— 0 12 10	..	L. R.— 14 15 0
					Total ..	2,282 14 3 Police— 23 2 3		847 5 3 Police— 0 9 0
230, S. A. No. 3.	Dehi Dhan Kora, pargana Tegachi	4,556 15 0 Police— 10 11 0	No ..	2 as 1 gd. 1 c. 3 kg. 17 41/180 til share only. All other shares than that specified will be excluded from the sale.	Bibi Hafezatan Nessa Unmatan Fatema Chowdhurani and others.	588 4 0 Police— 1 4 3	..	L. R. 3 6 2
230, S. A. No. 6.	Ditto ..	4,556 15 0 Police— 10 11 0	No ..	2 as. 9 gds. 1 c. 2 kg. share only. All other shares than that specified will be excluded from the sale.	Bibi Jamilatan Nessa and others.	703 6 0 Police— 1 9 0	..	L. R.— 133 15 0
230, S. A. No. 7.	Ditto ..	4,556 15 0 Police— 10 11 0	No ..	2 as 9 gds. 1 c. 2 kg. share only. All other shares than that specified will be excluded from the sale.	Bibi Hafezatan Nessa Unmatan Fatema Chowdhurani.	703 8 0 Police— 1 10 0	..	L. R.— 127 3 0
230, S. A. No. 8.	Ditto ..	4,556 15 0 Police— 10 11 0	No ..	1 a. 1 gd. 2 c. 1 kg. 10 til share only. All other shares than that specified will be excluded from the sale.	Haxi Khandakar Maulvi Mahamad Mahasen Khan Bahadur and others.	307 13 0 Police— 0 11 0	..	L. R.— 55 8 0
230, S. A. No. 9.	Ditto ..	4,556 15 0 Police— 10 11 0	No ..	1 a. 1 gd. 2 c. 1 kg. 10 til share only. All other shares than that specified will be excluded from the sale.	Syed Sah Abdul Oli, Abu Mazahar and others.	307 13 0 Police— 0 11 0	..	L. R.— 43 10 6
230, S. A. No. 19.	Ditto ..	4,556 15 0 Police— 10 11 0	No ..	6 gds. 2 kg. 15 2/9 til share only. All other shares than that specified will be excluded from the sale.	Bibi Fatema Khatoon Chowdhurani.	88 0 0 Police— 0 3 5	..	L. R.— 19 8 0
					Total ..	2,698 12 0 Police— 6 0 8	..	383 2 8
254 Ejmali.	Dihi Bansila, pargana Govindapur.	3,918 2 0 Police— 39 8 0	No ..	4 annas share only. All other shares than that specified will be excluded from the sale.	Nirod Bala Debi, sebait of (a) Sree Sree Iswar Salagram Sila Bigraha Deb Thakur.	979 8 0 Police— 9 14 0	..	L. R.— 177 9 0
274 Ejmali.	Sujanagar, pargana Sujanagar.	5,056 15 0 Police— 33 1 0	No ..	4 annas share only All other shares than that specified will be excluded from the sale.	Maharaj Bahadur Singha.	1,264 3 6 Police— 8 5 0	..	L. R.— 228 11 0 Police— 2 2 0

Tauzi No.	Name of mahal and pargana.	Sadar jama of whole estate.	Whether the whole estate is to be sold.	If only a share is to be sold, specification of such share or shares.	Names of proprietors of property to be sold.	If only a share is to be sold the sadar jama of such share.	If the whole estate is to be sold, the arrears due from it.	If only a share is to be sold, the arrears due from it.
1	2	3	4	5	6	7	8	9
		Rs. a. p.				Rs. a. p.	Rs. a. p.	Rs. a. p.
288 Ejmali.	M. Ghasigaon and others, pargana Rongaon Khalisa	2,067 1 0 Police— 22 6 0	No ..	10 annas share only .. All other shares than that specified will be excluded from the sale.	Brindaban Chandra Sarkar and others.	1,291 15 0 Police— 13 15 0	..	L. R.— 136 0 0 Police— 2 11 0
303 Ejmali.	Dhamin, pargana Dhamin.	2,195 0 1	No ..	6 as. 16 gds. share only All other shares than that specified will be excluded from the sale.	Syed Mahamed Masud and others.	933 4 2	..	L. R.— 259 14 0
303, S. A. No. 4.	Ditto ..	2,195 0 1	No ..	10 gandas share only All other shares than that specified will be excluded from the sale.	Bibi Fatema Khatun Chowdhurani, matwali.	68 9 6	..	L. R.— 20 3 0
303 S. A. No. 6.	Ditto ..	2,195 0 1	No ..	4 as. 14 gds. share .. All other shares than that specified will be excluded from the sale.	Bibi Wasiatan Nessa Unmatan Ayesha Chowdhurani.	644 12 6	..	L. R.— 156 8 6
					Total ..	1,646 10 2		436 9 6
304	Jahanabad, pargana Dhamin.	792 0 0	Yes ..	....	Nalinakhi Chowdhurani.	..	L. R.— 150 0 0	..
430 Ejmali.	Dihi Brichapila, pargana Tappe Chapila.	3,274 11 0	No ..	3 as. 10 gds. share only All other shares than that specified will be excluded from the sale.	Syed Mahamed Masud and others.	716 5 6	..	L. R.— 121 7 0
430, S. A. No. 1.	Ditto ..	3,274 11 0	No ..	2 as. 12 gds. 1 c. 2 dt. 1 6/31 job share only. All other shares than that specified will be excluded from the sale.	Bibi Taheratan Nessa Unmatan Rofia Chowdhurani and others.	535 5 0	..	L. R.— 34 15 0
430, S. A. No. 4.	Ditto ..	3,274 11 0	No ..	10 gandas share only All other shares than that specified will be excluded from the sale.	Bibi Fatema Khatun Chowdhurani, matwali.	102 5 6	..	L. R.— 18 2 0
430, S. A. No. 5.	Ditto ..	3,274 11 0	No ..	4 annas share only .. All other shares than that specified will be excluded from the sale.	Chowdhuri Hafiz Mahamed Abdul Azim Abu Ahmed *alias* Abol Moktar and others.	818 10 9	..	L. R.— 151 0 0
430, S. A. No. 6.	Ditto ..	3,274 11 0	No ..	4 annas share only .. All other shares than that specified will be excluded from the sale.	Bibi Hafezatan Nessa Unmatan Fatema Chowdhurani.	818 10 9	..	L. R.— 148 7 9
					Total ..	2,991 5 6	..	473 15 9
440, S. A. No. 4.	Taraf Bahadipur, pargana Chapila.	1,563 8 0	No ..	2 as. 12 gds. share only. All other shares than that specified will be excluded from the sale.	Lalit Mohan Mallik and another.	254 6 0	..	L. R.— 55 10 0
440, S. A. No. 5.	Ditto ..	1,563 8 0	No ..	2 as. 12 gds. share only. All other shares than that specified will be excluded from the sale.	Ramranjan Mallik and others.	254 6 0	..	L. R.— 15 12 0
					Total ..	508 12 0		71 6 0
483	Isponjarpur *alias* Darusa, pargana Mahamedpur.	4,710 14 0	Yes ..	....	Dharani Kumar Ghosh and another.	..	L. R.— 845 8 0	..
1845 Ejmali.	Jiasindhu, pargana Jiasindhu.	6,411 5 0 Police— 64 4 0	No ..	14 as. 11 gds. 2 c. 2 kt. share only. All other shares than that specified will be excluded from the sale.	Mati Lal Saha Chowdhury and others.	5,843 10 0 Police— 58 9 0	..	L. R.— 21 9 5

Tauzi No.	Name of mahal and pargana.	Sadar jama of whole estate.	Whether the whole estate is to be sold.	If only a share is to be sold, specification of such share or shares.	Names of proprietors of property to be sold.	If only a share is to be sold, the sadar jama of such share.	If the whole estate is to be sold, the arrears due from it.	If only a share is to be sold, the arrears due from it.
1	2	3	4	5	6	7	8	9
		Rs. a. p.				Rs. a. p.	Rs. a. p.	Rs. a. p.
2239	Bongaon Jaigir, pargana Bongaon Jaigir,	1,823 10 0 Police— 13 5 0	Yes ..	....	Delbar Hossain Shaha and others.	.. .. ..	L. R.— 278 0 0 Police— 3 6 0	.. ..
2278	Dihi Puthia, pargana Mahamedpur.	1,636 1 0	Yes ..	....	Maulvi Chowdhury Mohamed Moshara Huque and others.	..	L. R.— 296 9 0	..
2279	Ditto ..	1,636 1 0	Yes ..	....	Chowdhuri Mahamed Jille Kadir and others.	..	L. R.— 296 9 0	..
2280	Ditto ..	715 13 0	Yes ..	....	Khandakar Fazle Kadir Abu Jamin and others.	..	L. R.— 126 0 0	..
2281	Ditto ..	715 13 0	Yes ..	....	Syed Mahamed Masud and others.	..	L. R.— 151 7 6	..
2360 Ejmali.	Dihi Ronabari, pargana Mahamedpur.	1,506 15 0 Police— 11 0 0	No ..	7 as. 10 gds. share only. All other shares than that specified will be excluded from the sale.	Ditto ..	L. R.— 706 6 0 Police— 5 2 0	..	L. R.— 23 8 0
2360, S. A. No. 1.	Ditto ..	1,506 15 0 Police— 11 0 0	No ..	3 as. 6 gds. 3 c. 2 kt. 1 dt. share only. All other shares than that specified will be excluded from the sale.	Bibi Taheratan Nessa Unmatan Fatema Chowdhurani and others.	315 4 0 Police— 2 4 6	..	L. R.— 0 14 9
2360, S. A. No. 2.	Ditto ..	1,506 15 0 Police— 11 0 0	No ..	4 annas share only All other shares than that specified will be excluded from the sale.	Bibi Unmatan Rokya Chowdhurani.	376 12 0 Police— 2 12 0	..	L. R.— 68 1 0
2360, S. A. No. 4.	Ditto ..	1,506 15 0 Police— 11 0 0	No ..	10 gandas share only All other shares than that specified will be excluded from the sale.	Bibi Fatema Khatun Chowdhurani, matwalli.	47 1 0 Police— 0 5 6	..	L. R.— 10 7 0
					Total ..	1,445 7 0 Police— 10 8 0		102 15 3 Police— Nil
2361 Ejmali.	Dihi Ronabari including Parishan, pargana Mahamedpur.	1,507 2 0 Police— 11 0 0	No ..	14 annas share only All other shares than that specified will be excluded from the sale.	Chowdhuri Mahamed Jille Kadir and others.	1,318 12 0 Police— 9 10 0	..	L. R.— 135 10 0 Police— 1 8 0
2367	Hatra and others, pargana Tegachi.	796 8 0	Yes ..	..	Hira Lal Ghosh and others.	..	L. R.— 62 11 9	..
2368	Ditto ..	558 9 0	Yes ..	..	Radharaman Chowdhury and others.	..	L. R.— 117 6 0	..

The abovementioned estates and shares of estates are being advertised for sale for instalments of revenue which were due on or before the 31st Bhadra, 1341 B.S., of which the latest day of payment was 28th September 1934.

Rajshahi, the 15th December 1934.

A. S. LARKIN, Collector.

Notification A.

NOTICE is hereby given, under sections 6 and 13, Act XI of 1859, that the undermentioned estates and shares o estates in the district of Malda, will be put up for sale at the office of the Collector of that district on the 9th day o January 1935, at 12 noon, for arrears of revenue and other demands which by law are realizable as arrears of land revenue.

When in columns 5, 7 and 9 of the following statement it is stated that only a share is to be sold, it is to be understood that a separate account is kept for that share—

Tauzi No.	Name of mahal and pargana.	Sadar jama of whole estate.	Whether the whole estate is to be sold.	If only a share is to be sold, specification of such share or shares.	Names of proprietors of property to be sold.	If only a share is to be sold, the sadar jama such share.	If the whole estate is to be sold, the arrears due from it.	If only a share is to be sold, the arrears due from it.
1	2	3	4	5	6	7	8	9
		Rs. a. p.				Rs. a. p.	Rs. a. p.	Rs. a. p.
84	Taraf Hossainpur, pargana Kotwali.	2,614 12 0	Whole estate will be sold.	....	Goswain Rudra Nanda Giri.	..	637 0 0	..
89	Kismat Pargana Habeliltara, pargana Habeliltara.	984 5 0	Ditto	....	Mahanta Bhagaban Das.	..	182 0 0	..
118	Taraf Jadunagar Nimgachi, pargana Bhatiagopalpur.	1,653 14 9	No ..	118-R. 8. 13 annas share of mauzas Nimgachi and three others. Besides this all other shares will be excluded from sale.	Md. Ichha Shah and others.	642 10 9	..	82 15 6
118	Ditto ..	1,653 14 9	No .	118. 16 annas share of mauzas Jadabnagar and three others. Besides this all other shares will be excluded from sale. These two shares will be put up to sale together.	Ditto ..	862 15 0	..	167 15 6
125	Kismat Pargana Kashimnagar, pargana Kashimnagar.	1,036 11 0	No ..	125-R. 8. 9 as. 3 g. 2 k. 1 kt. share. Besides this all other shares will be excluded from sale.	Purna Chandra Mallik and others.	503 6 0	..	9 8 0
125	Ditto ..	1,036 11 0	No ..	125-5. 3 as. 8 g. 2 kt. 1 kg. 1 13/16 til share. Besides this all other shares will be excluded from sale.	Jotsnamayee Dasi, guardian on behalf of her minor brother Monimohan Choudhury.	221 6 0	..	52 0 0
125	Ditto ..	1,036 11 0	No ..	125-7. 1 a. 16 g. 2 k. 2 kt. share. Besides this all other shares will be excluded from sale. These three shares will be put up to sale together.	Bijoyapal Das and others.	178 3 0	..	40 9 0
146	Taraf Khans Alampur, pargana Bhatiagopalpur.	1,160 2 2	Whole estate will be put up to sale.	146-R. 8. 8 annas share.	Kumar Krisna Ghose, trustee.	5,534 9 1	..	1,805 8 11
146	Ditto ..	1,160 2 2	Ditto ..	146-1. 8 annas share	Tarangini Dasi, guardian mother for her sons Nirode Krishna Ghose and others.	5,534 9 1	..	1,805 8 11
163	Toke Bhaktipur, mataluk mauza Madhalpur, pargana Rokanpur.	1,188 14 9	No ..	163-1. 8 annas share Besides this all other shares will be excluded from sale.	Prafulla Kumar Bannerjee and others.	594 7 0	..	105 0 0
176	Taraf Nosda Gopalpur Chakla Dewnapur, pargana Chak Dewnapur.	1,423 10 0	Whole estate will be sold.	....	Hari Sudan Bhaduri and others.	..	402 0 0	..
204	Taraf Fatepur, pargana Bahadurpur.	1,751 10 0	No ..	204-R. 8. 2 as. 6 g. 1 kt. share. Besides this all other shares will be excluded from sale.	Md. Fairabi Choudhury and others.	252 4 6	..	54 2 0
204	Ditto ..	1,751 10 0	No ..	204-2. 2 annas share. Besides this all other shares will be excluded from	Syam Sundar Choudhury and others.	218 15 6	..	45 15 0

Tauzi No.	Name of mahal and pargana.	Sadar jama of whole estate.	Whether the whole estate is to be sold.	If only a share is to be sold, specification of such share or shares.	Names of proprietors of property to be sold.	If only a share is to be sold, the sadar jama of such share.	If the whole estate is to be sold, the arrears due from it.	If only a share is to be sold, the arrears due from it.
1	2	3	4	5	6	7	8	9
		Rs. a. p.				Rs. a. p.	Rs. a. p.	Rs. a. p.
204	Taraf Fatepur, pargana Bahadurpur.	1,751 10 0	No ..	204-3. 3 as. 10 g. share. Besides this all other shares will be excluded from sale.	Syam Sundar Choudhury and others.	383 3 0	..	82 0 0
204	Ditto ..	1,751 10 0	No ..	204-4. 1 a. 13 g. 3 k. 2 kt. share. Besides this all other shares will be excluded from sale.	Rakhal Chandra Bannerjee.	185 10 0	..	39 12 0
204	Ditto ..	1,751 10 0	No ..	204-5. 2 annas share. Besides this all other shares will be excluded from sale.	Md. Golam Mohsen Choudhury and others.	218 15 0	..	46 12 0
204	Ditto ..	1,751 10 0	No ..	204-6. 2¼ annas share. Besides this all other shares will be excluded from sale. All these shares will be put up to sale together.	Nandagopal Choudhury and others.	273 11 0	..	58 7 0
205	Taraf Raghunathpur and others, pargana Bhatiagopalpur.	4,405 10 4	No ..	205-R.S. 9 as. 3 g. 1 k. 1 kt. share of mauzas Agarpur and 13 others. Besides this all other shares will be excluded from sale.	Dinabandhu Singh Jhah and others.	1,309 5 0	..	463 4 0
205	Ditto ..	4,405 10 4	No ..	205-4. One anna share of mauzas Agarpur and 13 others. Besides this all other shares will be excluded from sale.	Md. Anisur Rahman Choudhury and others.	142 12 10	..	46 0 0
205	Ditto ..	4,405 10 4	No ..	205-7. 16 annas share of mauzas Yeadgarpur and 15 others. Besides this all other shares will be excluded from sale. All these shares will be put up to sale together.	Bibhuti Bhusan Das and others.	..	..	..
221	Sadipur Taraf, pargana Kotwali.	693 3 0	Whole estate will be sold.	....	Goswain Rudra Nanda Giri.	..	289 0 0	..
597	Taraf Raghabbati, pargana Islampur.	6,152 7 0	No ..	597-R. S. 8 annas share of mauzas Airmari and 18 others and 16 annas share of mauzas Gota and 5 others. Besides this all other shares will be excluded from sale.	Kali Charan Singha and others.	..	..	..
	Ijara mahals.							
472	Naobharatti Chandpur, pargana Habelitafa.	2,063 0 0	Whole estate will be sold.	....	Ismail Choudhury and others.	..	515 13 8	..
823	2,336 bighas of excess land in mauza Gangaprasad, estate Harachandrapur in tauzi No. 616.	1,840 0 0	Ditto	....	Sripat Singh Dugar	..	774 12 5 back arrears. 460 0 0 for September 1934. 1,234 12 5	..

This notice is issued in respect of instalments of revenue which were due on or before the 31st Bhadra, 1341 B.S., of which the latest date of payment was 28th September 1934.

Malda, the 18th December 1934.

J. N. TALUKDAR, Collector.

Notification.

NOTICE is hereby given, under sections 6 and 13 of Act XI of 1859, that the undermentioned estates and shares of estates in the district of Birbhum will be put up for sale at the office of the Collector of that district on the 10th January 1935, at 12 noon, for arrears of revenue and other demands which by law are realizable as arrears of land revenue.

When in columns 5, 7 and 9 of the following statement it is stated that only a share is to be sold it is to be understood that a separate account is kept for that share :—

Tauzi No.	Name of mahal and pargana.	Sadar jama of whole estate.	Whether the whole estate is to be sold.	If only a share is to be sold, specification of such share or shares.	Names of proprietors of property to be sold.	If only a share is to be sold, the sadar jama of such share.	If the whole estate is to be sold, the arrears due from it.	If only a share is to be sold, the arrears due from it.
1	2	3	4	5	6	7	8	9
		Rs. a. p.				Rs. a. p.	Rs. a. p.	Rs. a. p.
4	Senbhum, pargana Senbhum.	41,132 10 0	..	16 annas share of mauza Binuria, 8 annas share of mauzas Choumondalpur, Hansra, Chhatarbandi and Khirai, in separate account No. 1.	Sudhakar Mazumdar and others.	849 0 8	..	16 12 6
4	Ditto ..	41,132 10 0	..	4 gds. 1 kara 2 krantis 6 tils share of mauzas Kankhutia and Raipur, 4 gds. 1 kara 2 krantis 5 tils share of mauza Choupahari Jungle, 4 gds. 1 kara 2 krantis 7 tils share of mauzas Choupahari Jungle, Radhanagar, Dakhin Radhanagar, Chandanpur and Mahidipur, 13 gds. 1 kara 1 kranti share of mauzas Adityapur, Bolepur and Bandhgara, 8 annas share of mauzas Faridpur, Chakpali, Binodepur, Dakhin Harirampur and Nachansa, 9 as. 6 gds. 2 karas 2 krantis share of mauzas Gidgram, 4 annas share of mauzas Nurpur, Bahadurpur, Rajatpur, Ghirnapara, Mouli, Narayanpur, Jadupur, Ranganja, Bandhgara and Chandipur, 1 gd. 3 karas 2 krantis 8 tils share of mauzas Muluk, Araji Muluk and Gobindapur, in separate account No. 11.	Saila Bala Debi ..	1,737 5 6	..	108 9 3
4	Ditto ..	41,132 10 0	..	16 annas share of mauzas Murandihi, Chunpalashi, Saldanga, Dalla, Ruppur, Ramnagar and Rasuda, in separate account No. 18.	Rajani Kanta Biswas.	2,689 13 6	..	132 13 6
4	Ditto ..	41,132 10 0	..	1 a. 15 gds. 2 karas 16 tils share of mauzas Kankhutia and Raipur, 1 a. 15 gds. 2 karas 14 tils share of mauzas Choupahari Jungle, Radhanagar, Dakhin Radhanagar, Chandanpur and Mahidipur, 8 annas share of mauzas Choumondalpur, Hansra, Chhatarbandi and Khirai, 5 as. 2 gds. 2 karas share of mauzas Hariharpur *alias* Mukunda, 16 annas share of mauzas Mahidipur, Kankhutia, Nurpur, Goltikuri, Shibpur, Narayanpur and Matikona, in separate account No. 20. All other shares than that specified will be excluded from the sale.	Kedar Nath Ghose and others.	1,882 4 4	..	50 4 10
10	Dhoka, pargana Swarupsing.	16,707 4 0	Whole estate, 16 annas share.	..	Mahanta Srivat Banawari Mukunda Das Nandi Dalal.	..	999 0 0	..

Tauzi No.	Name of mahal and pargana.	Sadar jama of whole estate.	Whether the whole estate is to be sold.	If only a share is to be sold, specification of such share or shares.	Names of proprietors of property to be sold.	If only a share is to be sold, the sadar jama of such share.	If the whole estate is to be sold, the arrears due from it.	If only a share is to be sold, the arrears due from it.
1	2	3	4	5	6	7	8	9
		Rs. a p.				Rs. a. p.	Rs. a. p	Rs. a. p.
14	Bhurkunda, pargana Bhurkunda.	15,142 9 0	..	2 as. 13 gds. 1 kara 1 kranti share in separate account No. 1. All other shares than that specified will be excluded from the sale.	Birendra Nath Mustafi and others	2,523 11 6	..	75 10 3
22	Sainthia, pargana Mourcswarsabek.	15,151 5 0	..	2 annas share in residuary excepting separate account Nos. 1 to 14.	Hari Charan Ghose and others.	1,893 0 8	..	36 13 1
22	Ditto ..	15,151 5 0	..	13 gds. 1 kara 1 kranti share in separate account No. 14. All other shares than that specified will be excluded from the sale.	Prosad Ch. Ghose	634 5 0	..	37 4 3
25	Indus, pargana Kutubpur.	5,687 2 8	..	8 annas share in separate account No. 1. All other shares than that specified will be excluded from the sale.	Kalidas Das for self and sebait.	2,843 9 5	..	155 3 3
31	Purandarpur, pargana Purandarpur.	6,299 6 0	..	2 as. 10 gds. share in separate account No. 1.	Kumar Brahma Nr. Chakrabarty.	984 4 5	..	58 10 0
				2 annas share in separate account No. 3.	Ram Ranjan Hati and others.	787 7 10	..	46 13 1
				2 as. 10 gds. share in separate account No. 6. All other shares than that specified will be excluded from the sale.	Ram Ranjan Mukherjee.	984 4 5	..	58 7 11
66	Murundi, pargana Kutubpur.	1,531 15 0	..	5 as. 6 gds. 2 karas 2 krantis share in residuary excepting separate account Nos. 1 and 2.	Suprobhat Chandra and others.	510 10 4	..	71 5 4
66	Ditto ..	1,531 15 0	..	5 as. 6 gds. 2 karas 2 krantis share in separate account No. 1.	Dharma Das Chandra and others.	510 10 4	..	71 5 4
				5 as. 6 gds. 2 karas 2 krantis share in separate account No. 2.	Dhanapati Chandra and others.	510 10 4	..	71 5 4
84	Mandari, pargana Khargram.	719 5 0	Whole estate, 16 annas share.	....	Golam Gous and others, Motouli.	..	10 0 0	..
94	Gokulata, pargana Gokulata.	3,250 14 0	..	3 as. 15 gds. 2 karas 13 tils share in separate account No. 4. All other shares than that specified will be excluded from the sale.	Dwijendra Kumar Roy and others.	767 9 1	..	66 13 1
100	Srichandrapur, pargana Akbarshahi.	1,689 10 0	..	7 as. 3 gds. 1 kara 7 tils share in residuary excepting separate account Nos. 1 to 3 and 5 to 7. All other shares than that specified will be excluded from the sale.	Sourindra Bhusan Roy and others.	156 4 11	..	67 3 2
111	Rasowan, pargana Barra.	4,173 14 1	..	5 as. 10 gds. 3 karas 1 kranti 5 tils share in residuary excepting separate account Nos 1 to 6 and 8 to 11.	Sasthi Kinkar Banerjee and others.	1,562 14 2	..	14 8 0
111	Ditto ..	4,173 14 1	..	2 as. 5 gds. share in separate account No. 1.	Tara Sankar Banerjee and others.	588 1 1	..	8 15 0
111	Ditto ..	4,173 14 1	..	2 annas share in separate account No. 6. All other shares than that specified will be excluded from the sale.	Tara Prosanna Mukherjee and others.	521 12 7	..	8 0 0

Tauzi No.	Name of mahal and pargana.	Sadar jama of whole estate.	Whether the whole estate is to be sold.	If only a share is to be sold, specification of such share or shares.	Names of proprietors of property to be sold.	If only a share is to be sold, the sadar jama of such share.	If the whole estate is to be sold, the arrears due from it.	If only a share is to be sold, the arrears due from it.
1	2	3	4	5	6	7	8	9
		Rs. a. p.				Rs. a. p.	Rs. a. p.	Rs. a. p.
114	Bongram, pargana Barbaksing.	2,526 4 0	..	3 as. 4 gds. share in residuary excepting separate account Nos. 1 to 10. All other shares than that specified will be excluded from the sale.	Provash Chandra Mitra.	505 3 11	..	29 9 10
125	Kanutia, pargana Swarupsing.	1,640 6 0	Whole estate, 16 annas share.	....	Gobinda Chandra Mazumdar and others.	..	94 0 0	..
143	Shyamsundarpur, pargana Barbaksing.	2,113 13 0	..	4 as. 6 gds. 1 kara share in residuary excepting separate account Nos 1 and 2. All other shares than that specified will be excluded from the sale.	Binay Krishna Choudhuri and others.	560 11 9	..	18 1 5
158	Kadipur, pargana Kutubpur.	851 4 0	Whole estate, 16 annas share.	....	Srish Chandra Chaudhuri and others, sebaits.	..	52 0 0	..
172	Majhigram, pargana Khatanga.	3,422 4 0	..	12 annas share in residuary excepting separate account No. 1.	Munshi Golam Gous and others.	2,566 11 0	..	108 0 0
				4 annas share in separate account No. 1.	Shyamapada Roy and others.	855 9 0	..	36 0 0
173	Rangtara, pargana Swarupsing.	806 8 0	..	18 as. 16 gds. 2 karas 2 krantis share in residuary excepting separate account No. 2. All other shares than that specified will be excluded from the sale.	Ashu Tosh Ghosal and others.	775 1 7	..	41 0 7
230	Nimtikuri, pargana Haripur.	602 10 0	Whole estate, 16 annas share.	....	Mahesh Chandra Dutta and others.	..	7 12 1	..
240	Damdama, pargana Alinagar.	1,482 11 0	..	6 as. 5 gds. share of mauzas Abadanga, Damdama, Nijuri, Maligram, Hatora, Kenduajulai, Pupaldihi, Sangra, Tentuldihi, Patharghata, Layekpur and Tripuraripur, in separate account No. 1. All other shares than that specified will be excluded from the sale.	Shyamapada Roy and others.	579 2 10	..	32 13 0
250	Ganutia, pargana Ichhapukhuria.	3,732 9 0	Whole estate, 16 annas share.	....	Minor Niroj Kumar Ghose and others.	..	1,090 0 0	..
580	Sahapur, pargana Swarupsing.	1,967 11 0	Do. ..	....	Rajendra Nath Pal and others.	..	120 0 0	..
661	Borla, pargana Sahajadpur.	504 8 3	Do. ..	....	Purnendu Narayan Roy Deb Barman and others.	..	93 14 0	..
666	Sanskar Bhadrapur, pargana Dhawa.	7,477 3 11	..	11 annas share of mauzas Karamji, Pachhim Gopalpur, Radhagobindapur, Kanior, Bhabanipur, Kanaipur, Mathkalitha, Kalitha, Barala, Atgram, Mukrampur, Radipur, Bhadrapur, Purba Gopalpur, Akalipur, Purba Lakhinarayanpur, Gosainpur, Jeetha Bhabanipur, Bara, Ranha, Sarbashidanga, Simlandi, Hajarpur, Bandhkhula Sitalgram, Raipur, Araji Madhupur, Protappur Sanskar, Sungai and Gopinathpur in residuary excepting separate account Nos. 1 and 2. All other shares than that specified will be excluded from the sale.	Kumar Debendra Nath Roy.	5,140 8 8	..	525 0 10

Tauzi No.	Name of mahal and pargana.	Sadar jama of whole estate.	Whether the whole estate is to be sold.	If only a share is to be sold, specification of such share or shares.	Names of proprietors of property to be sold.	If only a share is to be sold, the sadar jama of such share.	If the whole estate is to be sold, the arrears due from it.	If only a share is to be sold, the arrears due from it.
1	2	3	4	5	6	7	8	9
		Rs. a. p.				Rs. a. p.	Rs. a. p.	Rs. a. p.
928	Simgram, pargana Nowanagar.	524 14 0	Whole estate, 16 annas share.	....	Mirja Lutfa Ali and others.	..	122 0 9	..
938	Majkuri, pargana Majkuri.	569 10 10	Do. ..	....	Tarapada Roy and others.	..	24 9 4	..
1003	Raghunathpur, pargana Sahajadpur.	717 4 2	Do. ..	....	Sabaran Nessa Bibi and others.	..	123 11 9	..
1221	Taraf Belhatti, pargana Barbaksing.	2,218 0 7	Do. ..	....	Dwarka Nath Telang and others General Secretary.	..	494 10 11	..
1270	Taraf Mitrapur, Dihinangar, pargana Nowanagar.	1,804 3 3	Do. ..	....	Sital Chandra Choudhuri and others.	..	220 12 10	..

These estates are being advertised for sale for instalments of revenue due on or before the 31st Bhadra, 1341 B.S., of which the latest date of payment was 28th September 1934.

Suri, the 21st December 1934. [ILLEGIBLE], *for* Collector.

Advertisement of sale.

NOTICE is hereby given that the undermentioned plot of land no longer required by the Government will be put up to sale at 11 o'clock on the 27th February 1935 corresponding with the 15th Falgoon, 1341 B. S., in the office of the Subdivisional Officer of Goalundo at Rajbari.

The purchasers of the plot of land will be subject to the following conditions :—

1st.—If the amount of purchase money does not exceed Rs. 100 the whole amount must be paid down at once.

2nd.—If the amount of purchase money exceeds Rs. 100 one-fourth of the amount must be immediately deposited. If the balance be not paid by noon of the fifteenth day after the sale reckoning the day of sale as one or if that day be a close holiday, then by noon of the first succeeding office day the sale shall be cancelled, the sum deposited being forfeited to Government and the lot again put up for sale at the risk of the defaulting purchaser, after issue of advertisement as in the case of original sale.

3rd.—The plot of land will be sold revenue free to the highest bidder.

4th.—The sale will become final on receipt by the Collector of the orders of the Commissioner confirming it, and a regular conveyance will then be granted to the purchaser.

Consecutive lot No.	Name of district.	Pargana and mauza.	Number of of mile on which land is situated.	Situated on which side of the railway.	Approximate area in acres and decimals.	Land excluded from sale from each lot.		Commencement and termination of lot.	— Boundary of lot.
						Reasons for exclusion.	Acres and decimals.		
1	2	3	4	5	6	7		8	9
1	Faridpur.	Pargana Nasibshahi, mauza Konrokdi, J. L. No. 99, thana Ballakandi.	..	..	·16 or 8½ cottahs of standard measurement.	..	..	..	Cadastral plot No. 3061.

Faridpur, the 21st December 1934. A. E. PORTER, Collector.

Erratum.

Read Daimuddin Choudhury and others in column 6 against tauzi No. 198, separate account No. 2, *for* Daimuddin Choudhury and others, published at page 1293, Part II of the *Calcutta Gazette*, dated the 13th December 1934, and 1 a. 10 g. 2 $^{9}/_{13}$ kt. in column 5 against tauzi No. 785, separate account No. 5, *for* 1 a. 10 g. 29/13 kt., published at page 1295, Part II of the *Calcutta Gazette*, dated the 13th December 1934.

Dinajpur, the 26th December 1934. [ILLEGIBLE], *for* Collector.

CERTIFICATE CASE No. 265 OF 1934-35.

Demand—Rs. 2,933-10-6.

Date of sale—15th January 1935.

Time—12 noon.

Place—In the Settlement Office at Malda.

Certificate-holder—State Secretary.

Certificate-debtor—Raja Prithwi Chand Lal Chaudhury, son of Dharam Chand Lal Chaudhury, village, post-office and district Purnia.

Description of property.

	Name of mahal.	Tauzi No.	Khatian No.	Area.	Share.	Revenue.			Name of mauza and No.
					As.	Rs.	a.	p.	
		Thana Kaliachak.							
1.	Zamindary pargana Ekbarabad	1937 Purnia	73/গ	137·22	8	23,531	5	0	Chaklalu, 184.
2.	Ditto ..	Do. ..	1/গ	177·37	8	23,531	5	0	Syamdaspur, 107.
3.	Ditto ..	Do. ..	1/গ	205·12	8	23,531	5	0	Ganga Prosad, 106.
4.	Ditto ..	Do. ..	1/গ	141·81	8	23,531	5	0	Jat Kabil, 104.
5.	Ditto ..	Do. ..	1/গ	203·99	8	23,531	5	0	Jatdoman, 105.
6.	Ditto ..	Do. ..	13/গ	225·28	8	23,531	5	0	Maharapur, 103.
7.	Ditto ..	Do. ..	113/গ	10·12	8	23,531	5	0	Uttar Lakshipur, 88.
8.	Ditto ..	Do. ..	1/গ	241·60	8	23,531	5	0	Bisnooprasad, 89.
9.	Ditto ..	Do. ..	1691/গ	92·96	8	23,531	5	0	Jatgopalkagmari, 101.
10.	Ditto ..	Do. ..	189/গ	54·52	8	23,531	5	0	Uttarmahanpur, 99.
		Thana Englishbazar.							
11.	Zamindary pargana Ekbarabad	1937 Purnia	170/গ	63·31	8	23,531	5	0	Khalimpur, 32.
12.	Ditto ..	Do. ..	533/গ	89·42	8	23,531	5	0	Syampur, 30.
13.	Ditto ..	Do. ..	337/গ	76·94	8	23,531	5	0	Karmanigram, 79.

Malda, the 21st December 1934.

H. L. DAS GUPTA, Asst. Settlement Officer-in-charge.

In the High Court of Judicature at Fort William in Bengal, in Insolvency.

NOTICE OF ADJUDICATION ORDER.

No. 159 of 1934.

Re Chunna Lal Sadh, residing at No. 21, Hanspukur Lane, in the town of Calcutta, formerly carrying on business as broker in the market of printed saries in Barrabazar, in Calcutta aforesaid, and at present of no occupation, *ex parte* the debtor.

Birendra Nath Bose, debtor's solicitor.

ON the 13th day of December 1934, an order was made by the High Court of Judicature at Fort William in Bengal in its insolvency jurisdiction adjudging the abovenamed as an insolvent.

Note.—All debts due to the estate should be paid to me.

Dated this 20th day of December 1934.

G. M. FALKNER, Official Assignee.

In the High Court of Judicature at Fort William in Bengal, in Insolvency.

NOTICE OF ADJUDICATION ORDER.

No. 160 of 1934.

Re Prayagdas Vyas, residing at No. 6, Lal Madhab Mukherjee Lane, Calcutta, and employed as a gomastha of Messrs. Ramkissen Jaikissen of 15, Pugyaputty Street, Calcutta, *ex parte* the debtor in person.

ON the 15th day of December 1934, an order was made by the High Court of Judicature at Fort William in Bengal in its insolvency jurisdiction adjudging the abovenamed as an insolvent.

Note.—All debts due to the estate should be paid to me.

Dated this 20th day of December 1934.

G. M. FALKNER, Official Assignee.

In the High Court of Judicature at Fort William in Bengal, in Insolvency.

NOTICE OF ADJUDICATION ORDER.

No. 161 of 1934.

Re Bhabendra Nath Biswas, residing at No. 3, Mahamaya Lane, Kalighat, in the municipal jurisdiction of the town of Calcutta, and working as a clerk in E. I. Railway account office, Statistical Department, T. M. Section, at No. 105, Clive Street, in Calcutta aforesaid, *ex parte* the debtor in person.

ON the 17th day of December 1934, an order was made by the High Court of Judicature at Fort William in Bengal in its insolvency jurisdiction adjudging the abovenamed as an insolvent.

Note.—All debts due to the estate should be paid to me.

Dated this 20th day of December 1934.

G. M. FALKNER, Official Assignee.

In the High Court of Judicature at Fort William in Bengal, in Insolvency.

NOTICE OF ADJUDICATION ORDER.

No. 162 of 1934.

Re (Mrs.) Josephine Helen Rae, residing at 149, Karnani Building, Park Street, in the town of Calcutta, employed as an assistant by the National City Bank of New York at No. 4, Clive Street, in Calcutta aforesaid, *ex parte* the debtor in person.

ON the 17th day of December 1934, an order was made by the High Court of Judicature at Fort William in Bengal in its insolvency jurisdiction adjudging the abovenamed as an insolvent.

Note.—All debts due to the estate should be paid to me.

Dated this 21st day of December 1934.

G. M. FALKNER, Official Assignee.

In the High Court of Judicature at Fort William in Bengal, in Insolvency.

NOTICE OF ADJUDICATION ORDER.

No. 163 of 1934.

Re Arthur Davies, residing at No. 25A, Park Street, Karnani Mansions, in the town of Calcutta, and practising as an advocate in High Court, Calcutta, *ex parte* the debtor in person.

ON the 18th day of December 1934, an order was made by the High Court of Judicature at Fort William in Bengal in its insolvency jurisdiction adjudging the abovenamed as an insolvent.

Note.—All debts due to the estate should be paid to me.

Dated this 21st day of December 1934.

G. M. FALKNER, Official Assignee.

In the High Court of Judicature at Fort William in Bengal, in Insolvency.

INSOLVENCY CASE No. 48 OF 1933.

Re Harjiwandas Gordhandas, insolvents.

NOTICE is hereby given that on the 22nd day of January 1935, at 11 o'clock in the forenoon, or so soon thereafter as the application can be heard before the Judge in insolvency, an application made by Meghraj Agarchand, creditors of the insolvents aforesaid for annulment of the adjudication order, dated 24th March 1933, under section 41 of the Presidency Town Insolvency Act, III of 1909, and rule 142A made thereunder, will be heard.

KHAITAN & Co.,
Attorneys for Meghraj Agarchand.

1, Old post Office Street, Calcutta, 21st December 1934.

(50—1)

In the Court of the District Judge of Hooghly.

NOTICE is hereby given, under clause (*t*) of section 12 of the Provincial Insolvency Act V of 1920, to his creditors that the insolvency petition of Giridhari Chandra, son of late Fakir Chandra Chandra, of Serampore, thana Serampore, district Hooghly, has been admitted by this Court as No. 99 of 1934 and that the 3rd January 1935 has been fixed for the hearing thereof.

S. SEN, District Judge.

Chinsura, the 17th December 1934.

(1—1)

In the Court of the District Judge of Hooghly.

INSOLVENCY PETITION No. 14 OF 1933.

NOTICE is hereby given that Maulvi Mahammad Jeaul Huq, son of late Golam Kader, of Udna, thana Khanakul, district Hooghly, was on the 1st February 1934 adjudged an insolvent. The 1st February 1935 has been fixed for framing a schedule and creditors are required to prove their claims on that day.

S. SEN, District Judge.

Chinsura, the 7th December 1934. (2864—1)

NOTICE OF ADJUDICATION ORDER.

In the Court of the District Judge of Jessore.

INSOLVENCY CASE No. 4 OF 1934.

Re Hari Pada Basu of Gobra, police-station Kotwali, district Jessore.

ON the 7th day of December 1934 an order was made by this Court adjudging the abovenamed person as an insolvent, he being directed to apply for discharge within a year from that date.

[ILLEGIBLE], Addl. District Judge-in-charge.

Jessore, the 19th December 1934. (2868—1)

ORDER OF ADJUDICATION.

Section 27 of the Provincial Insolvency Act, V of 1920.

In the Court of the District Judge of Pabna and Bogra.

INSOLVENCY CASE No. 45 OF 1934.

NOTICE is hereby given that debtor Sorashi Lal Saha, son of late Bhuban Mohon Saha, of Amta, at present resident of Serajganj, police-station Serajganj, district Pabna, was adjudged insolvent at the instance of his creditor Sare Bala Dasya, widow of late Kishori Lal Saha, of Amta, by an order of this Court, dated 11th December 1934, and he has been directed to apply for his discharge within six months.

K. C. CHATTERJI, Sub-Judge, 2nd Court, Pabna, in charge (offg.).

Pabna, the 19th December 1934. (2—1)

In the Court of the District Judge of Pabna and Bogra.

INSOLVENCY CASE No. 54 OF 1934.

WHEREAS Bhabani Charan Saha, son of late Brindaban Chandra Saha, of Delua, police-station Belkuchi and district Pabna, has applied to this Court, by a petition dated the 6th December 1934, to be declared an insolvent, this is to give notice to all his creditors that the Court has fixed the 4th January 1935 for hearing of the aforesaid application and for examination of the debtor.

K. C. CHATTERJI, Sub-Judge, 2nd Court, Pabna, in charge (offg.).

Pabna, the 19th December 1934. (3—1)

In the Court of the District Judge of Pabna and Bogra.

INSOLVENCY CASE No. 5 OF 1934.

NOTICE is hereby given that insolvent Ali Khan, son of late Shomas Khan, of Char Bhowanipur, police-station Sujanagar and district Pabna, has applied for his final discharge and the 22nd January 1935 has been set down for hearing of the application.

K. C. CHATTERJI, Sub-Judge, 2nd Court, Pabna-in-charge (offg.).

Pabna, the 17th December 1934. (2855—1)

ORDER ANNULLING ADJUDICATION.

Section 43 of the Provincial Insolvency Act, V of 1920.

In the 4th Court of the Sub-Judge at Alipore.

INSOLVENCY APPLICATION No. 293 OF 1933.

Mahammad Hossain, applicant.

WHEREAS Mahammad Hossain of 30, Watgunge Street, Khidderpore, police-station Watgunge, does neither appear nor apply for discharge within the specified time fixed for hearing, it is ordered that the order of adjudication, dated 5th February 1934, against the debtor be and the same is hereby annulled.

Dated this 28th day of November 1934.

J. N. SEN, Sub-Judge.

ORDER ANNULLING ADJUDICATION.

Section 43 of the Provincial Insolvency Act, V of 1920.

In the 4th Court of the Sub-Judge at Alipore.

INSOLVENCY APPLICATION No. 382 OF 1933.

Kanai Lal Halder, applicant.

WHEREAS Kanai Lal Harder of Sarshuna, police-station Behala, does neither appear nor apply for discharge within the specified time fixed, it is ordered that the order of adjudication, dated 9th June 1934, against the debtor be and the same is hereby annulled.

Dated this 11th day of December 1934.

J. N. SEN, Sub-Judge.

ORDER ANNULLING ADJUDICATION.

Section 43 of the Provincial Insolvency Act, V of 1920.

In the 4th Court of the Sub-Judge at Alipore.

INSOLVENCY APPLICATION No. 408 OF 1933.

Abdul Latif Mallick, applicant.

WHEREAS Abdul Latif Mallick of Metiaburuz, police-station Muchikola, does neither appear nor apply for discharge within the specified time fixed, it is ordered that the order of adjudication, dated 14th March 1934, against the debtor be and the same is hereby annulled.

Dated this 27th day of November 1934.

J. N. SEN, Sub-Judge.

ORDER ANNULLING ADJUDICATION.

Section 43 of the Provincial Insolvency Act, V of 1920.

In the 4th Court of the Sub-Judge at Alipore.

INSOLVENCY APPLICATION No. 478 OF 1933.

W. Green, applicant.

WHEREAS W. Green of 4, Koylas Sark Road, Kidderpore, police-station Ekbalpore, 24-Parganas, does neither appear nor apply for discharge within the specified time fixed, it is ordered that the order of adjudication, dated 31st May 1934, against the debtor be and the same is hereby annulled.

Dated this 4th day of December 1934.

J. N. SEN, Sub-Judge.

ORDER ANNULLING ADJUDICATION.

Section 43 of the Provincial Insolvency Act, V of 1920.

In the 4th Court of the Sub-Judge at Alipore.

INSOLVENCY APPLICATION No. 498 OF 1933.

Purna Shaikh, applicant.

WHEREAS Purna Shaikh of Kalipore, police-station Budge Budge, does neither appear nor apply for discharge within the specified time fixed, it is ordered that the order of adjudication, dated 12th May 1934, against the debtor be and the same is hereby annulled.

Dated this 21st day of November 1934.

J. N. SEN, Sub-Judge.

ORDER ANNULLING ADJUDICATION.

Section 43 of the Provincial Insolvency Act, V of 1920.

In the 4th Court of the Sub-Judge at Alipore.

INSOLVENCY APPLICATION No. 17 OF 1934.

Nibash Pramanik, applicant.

WHEREAS Nibash Pramanik of Arurpota, police-station Tallygunge, does neither appear nor apply for discharge within the specified time fixed, it is ordered that the order of adjudication, dated 19th May 1934, against the debtor be and the same is hereby annulled.

Dated this 5th day of December 1934.

J. N. SEN, Sub-Judge.

ORDER ANNULLING ADJUDICATION.

Section 43 of the Provincial Insolvency Act, V of 1920.

In the 4th Court of the Sub-Judge at Alipore.

INSOLVENCY APPLICATION No. 22 OF 1934.

Monmohon Mukherjee, applicant.

WHEREAS Monmohon Mukherjee of 95, Upper Circular Road, does neither appear nor apply for discharge within the specified time fixed, it is ordered that the order of adjudication, dated 2nd June 1934, against the debtor be and the same is hereby annulled.

Dated this 4th day of December 1934.

J. N. SEN, Sub-Judge.

ORDER ANNULLING ADJUDICATION.

Section 43 of the Provincial Insolvency Act, V of 1920.

In the 4th Court of the Sub-Judge at Alipore.

INSOLVENCY APPLICATION No. 28 OF 1934.

Gopal Chandra Kanji, applicant.

WHEREAS Gopal Chandra Kanji of Parbatti, police-station Budge Budge, does neither appear nor apply for discharge within the specified time fixed, it is ordered that the order of adjudication, dated 19th May 1934, against the debtor be and the same is hereby annulled.

Dated this 20th day of November 1934.

J. N. SEN, Sub-Judge.

ORDER ANNULLING ADJUDICATION.

Section 43 of the Provincial Insolvency Act, V of 1920.

In the 4th Court of the Sub-Judge at Alipore.

INSOLVENCY APPLICATION No. 30 OF 1934.

Rama Nath Pramanik, applicant.

WHEREAS Rama Nath Pramanik of Tulshiatta, police-station Joynagar, does neither appear nor apply for discharge within the specified time fixed, it is ordered that the order of adjudication, dated 28th April 1934, against the debtor be and the same is hereby annulled.

Dated this 28th day of November 1934.

J. N. SEN, Sub-Judge.

ORDER ANNULLING ADJUDICATION.

Section 43 of the Provincial Insolvency Act, V of 1920.

In the 4th Court of the Sub-Judge at Alipore.

INSOLVENCY APPLICATION No. 56 OF 1934.

Raicharan Halder, applicant.

WHEREAS Raicharan Halder of 7, Shonakhali, police-station Matla, does neither appear nor apply for discharge within the specified time fixed, it is ordered that the order of adjudication, dated 19th May 1934, against the debtor be and the same is hereby annulled.

Dated this 20th day of November 1934.

J. N. SEN, Sub-Judge.

ORDER ANNULLING ADJUDICATION.

Section 43 of the Provincial Insolvency Act, V of 1920.

In the 4th Court of the Sub-Judge at Alipore.

INSOLVENCY APPLICATION No. 63 OF 1934.

Shaikh Bhikari, applicant.

WHEREAS Shaikh Bhikari of 182, Belgachia Iiban Krishna Ghose Road, police-station Manik-tolla, does neither appear nor apply for discharge within the specified time fixed, it is ordered that the order of adjudication, dated 26th May 1934, against the debtor be and the same is hereby annulled.

Dated this 27th day of November 1934.

J. N. SEN, Sub-Judge.

ORDER ANNULLING ADJUDICATION.

Section 43 of the Provincial Insolvency Act, V of 1920.

In the 4th Court of the Sub-Judge at Alipore.

INSOLVENCY APPLICATION No. 87 OF 1934.

Daud Shaikh, applicant.

WHEREAS Daud Shaikh of Pachur, police-station Metiaburz, does neither appear nor apply for discharge within the specified time fixed, it is ordered that the order of adjudication, dated 26th May 1934, against the debtor be and the same is hereby annulled.

Dated this 27th day of November 1934.

J. N. SEN, Sub-Judge.

ORDER ANNULLING ADJUDICATION.

Section 43 of the Provincial Insolvency Act, V of 1920.

In the 4th Court of the Sub-Judge at Alipore.

INSOLVENCY APPLICATION No. 96 OF 1934.

Jotindra Nath Bose, applicant.

WHEREAS Jotindra Nath Bose of No. 20, Pitamber Bhattacharjee Lane, Garpar, police-station Belliaghata, does neither appear nor apply for discharge within the specified time fixed, it is ordered that the order of adjudication, dated 9th June 1934, against the debtor be and the same is hereby annulled.

Dated this 10th day of December 1934.

J. N. SEN, Sub-Judge.

ORDER ANNULLING ADJUDICATION.

Section 43 of the Provincial Insolvency Act, V of 1920.

In the 4th Court of the Sub-Judge at Alipore.

INSOLVENCY APPLICATION No. 99 OF 1934.

Bibhuti Bhusan Mukherjee, applicant.

WHEREAS Bibhuti Bhusan Mukherjee of Titagar, 24-Parganas, does neither appear nor apply for discharge within the specified time fixed, it is ordered that the order of adjudication, dated 9th June 1934, against the debtor be and the same is hereby annulled.

Dated this 10th day of December 1934.

J. N. SEN, Sub-Judge.

NOTICE TO CREDITORS OF APPLICATION FOR DISCHARGE.

Section 41 (*1*) of the Provincial Insolvency Act, V of 1920.

In the 4th Court of the Sub-Judge at Alipore.

INSOLVENCY CASE No. 312 OF 1933.

Shaikh Maqbool Hossain of Onrait 1st Lane, police-station Entally, applicant.

TAKE notice that the abovenamed insolvent has applied at the Court for his discharge, and that the Court has fixed the 9th day of January 1935, at 11 o'clock, for hearing the application.

Dated this 23rd day of November 1934.

J. N. SEN, Sub-Judge.

(2647—1)

NOTICE TO CREDITORS OF APPLICATION FOR DISCHARGE.

Section 41 (*1*) of the Provincial Insolvency Act, V of 1920.

In the 4th Court of the Sub-Judge at Alipore.

INSOLVENCY CASE No. 313 OF 1933.

Parshu Sing of 34-1, New Park Street, Calcutta, applicant.

TAKE notice that the abovenamed insolvent has applied at the Court for his discharge, and that the Court has fixed the 9th day of January 1935, at 11 o'clock, for hearing the application.

Dated this 23rd day of November 1934.

J. N. SEN, Sub-Judge.

(2648—1)

NOTICE TO CREDITORS OF APPLICATION FOR DISCHARGE.

Section 41 (*1*) of the Provincial Insolvency Act, V of 1920.

In the 4th Court of the Sub-Judge at Alipore.

INSOLVENCY CASE No. 356 OF 1933.

Abinash Chandra Nath and Nani Gopal Nath of Gobardanga, police-station Habrah, applicants.

TAKE notice that the abovenamed insolvents have applied at the Court for their discharge, and that the Court has fixed the 9th day of January 1935, at 11 o'clock, for hearing the application.

Dated this 21st day of November 1934.

J. N. SEN, Sub-Judge.

(2649—1)

NOTICE TO CREDITORS OF APPLICATION FOR DISCHARGE.

Section 41 (*1*) of the Provincial Insolvency Act, V of 1920.

In the 4th Court of the Sub-Judge at Alipore.

INSOLVENCY CASE No. 387 OF 1933.

Annada Charan Pal of 7, Kundu Lane, police-station Bhawanipore, applicant.

TAKE notice that the abovenamed insolvent has applied at the Court for his discharge, and that the Court has fixed the 9th day of January 1935, at 11 o'clock, for hearing the application.

Dated this 23rd day of November 1934.

J. N. SEN, Sub-Judge.

(2650—1)

NOTICE TO CREDITORS OF APPLICATION FOR DISCHARGE.

Section 41 (*1*) of the Provincial Insolvency Act, V of 1920.

In the 4th Court of the Sub-Judge at Alipore.

INSOLVENCY CASE No. 397 OF 1933.

Biswanath Thakur of 11-1-4, Russa Road South, police-station Bhowanipore, applicant.

TAKE notice that the abovenamed insolvent has applied at the Court for his discharge, and that the Court has fixed the 9th day of January 1935, at 11 o'clock, for hearing the application.

Dated this 23rd day of November 1934.

J. N. SEN, Sub-Judge.

(2651—1)

NOTICE TO CREDITORS OF APPLICATION FOR DISCHARGE.

Section 41 (*1*) of the Provincial Insolvency Act, V of 1920.

In the 4th Court of the Sub-Judge at Alipore.

INSOLVENCY CASE No. 412 OF 1933.

Osmand Thomas Smith of 37F, Mominpore Road, police-station Ekbalpore applicant.

TAKE notice that the abovenamed insolvent has applied at the Court for his discharge, and that the Court has fixed the 9th day of January 1935, at 11 o'clock, for hearing the application.

Dated this 21st day of November 1934.

J. N. SEN, Sub-Judge.

(2652—1)

NOTICE TO CREDITORS OF APPLICATION FOR DISCHARGE.

Section 41(*1*) of the Provincial Insolvency Act, V of 1920.

In the 4th Court of the Sub-Judge at Alipore.

INSOLVENCY CASE No. 50 OF 1934.

Amir Hossain of 21, Amritalal Road, Chitpore, 24-Parganas, applicant.

TAKE notice that the abovenamed insolvent has applied at the Court for his discharge, and that the Court has fixed the 9th day of January 1935, at 11 o'clock, for hearing the application.

Dated this 17th day of November 1934.

J. N. SEN, Sub-Judge.

(2658—1)

In the 4th Court of the Sub-Judge of 24-Parganas.

INSOLVENCY CASE No. 411 OF 1934.

Kashinath Shah of Magrahatbazar, police-station Magrahat, applicant.

To Golam Mahammad Khan of Bankipore, and others, creditors.

ON the 13th day of November 1934 it was ordered that the matter of the petition of the applicant be heard on the 9th day of January 1935, and that the said applicant do attend to be examined by this Court on that date.

J. N. SEN, Sub-Judge.

Alipore, the 21st November 1934. (2661—1)

In the 4th Court of the Sub-Judge of 24-Parganas.

INSOLVENCY CASE No. 418 OF 1934.

Tetar Ram Sing Mistri of 40, Girish Mukherjee Road, Bhowanipore, applicant.

To Kedar Nath Dutta of 9, Balaram Ghose Street, Shambazar, and others, creditors.

ON the 13th day of November 1934 it was ordered that the matter of the petition of the applicant be heard on the 9th day of January 1935, and that the said applicant do attend to be examined by this Court on that date.

J. N. SEN, Sub-Judge.

Alipore, the 23rd November 1934. (2662—1)

In the 4th Court of the Sub-Judge of 24-Parganas.

INSOLVENCY CASE No. 428 OF 1934.

Lasman Choudhury of 15, Firm Road, police-station Ballygunge, applicant.

To Damni Bepari of Chitpore, Sadagarpatty, and others, creditors.

ON the 14th day of November 1934 it was ordered that the matter of the petition of the applicant be heard on the 9th day of January 1935, and that the said applicant do attend to be examined by this Court on that date.

J. N. SEN, Sub-Judge.

Alipore, the 23rd November 1934. (2663—1)

In the 4th Court of the Sub-Judge of 24-Parganas.

INSOLVENCY CASE No. 436 OF 1934.

Kamakhya Kumar Das of Motiaburuz, police-station Muchikhola, applicant.

To Amiya Nath Mitter of Mudiali Road, police-station Garden Reach, and others, creditors.

ON the 17th day of November 1934 it was ordered that the matter of the petition of the applicant be heard on the 9th day of January 1935, and that the said applicant do attend to be examined by this Court on that date.

J. N. SEN, Sub-Judge.

Alipore, the 21st November 1934. (2665—1)

In the 4th Court of the Sub-Judge of 24-Parganas.

INSOLVENCY CASE No. 439 OF 1934.

Amulya Charan Bakar of 10, Ice Factory Lane, police-station Beniapukur, 24-Parganas, applicant.

To Nitaram Pitaram Chaudhury of Rai Bahadur Road, Chanditala, 24-Parganas, and others, creditors.

ON the 13th day of November 1934 it was ordered that the matter of the petition of the applicant be heard on the 9th day of January 1935, and that the said applicant do attend to be examined by this Court on that date.

J. N. SEN, Sub-Judge.

Alipore, the 17th November 1934. (2666—1)

In the 4th Court of the Sub-Judge of 24-Parganas.

INSOLVENCY CASE No. 442 OF 1934.

Juri Mistry of Bhangore, 24-Parganas, applicant.

To the Collector of 24-Parganas, and others, creditors.

ON the 12th day of November 1934 it was ordered that the matter of the petition of the applicant be heard on the 9th day of January 1935, and that the said applicant do attend to be examined by this Court on that date.

J. N. SEN, Sub-Judge.

Alipore, the 17th November 1934. (2667—1)

In the 4th Court of the Sub-Judge of 24-Parganas.

INSOLVENCY CASE No. 447 OF 1934.

Satish Chandra Chandra of 17-6, Sahanagore Road, police-station Tollygunge, 24-Parganas, applicant.

To Glass Trading Company, Ltd., 204, Lower Circular Road, Calcutta, and others, creditors.

ON the 13th day of November 1934 it was ordered that the matter of the petition of the applicant be heard on the 9th day of January 1935, and that the said applicant do attend to be examined by this Court on that date.

J. N. SEN, Sub-Judge.

Alipore, the 17th November 1934. (2669—1)

In the 4th Court of the Sub-Judge of 24-Parganas.

INSOLVENCY CASE No. 451 OF 1934.

Apurba Charan Mazumder of No. 3, Loco Office, police-station Bichpore, applicant.

To Amir Khan of Bichpore Bazar, police-station Bichpore, and others, creditors.

ON the 14th day of November 1934 it was ordered that the matter of the petition of the applicant be heard on the 9th day of January 1935, and that the said applicant do attend to be examined by this Court on that date.

J. N. SEN, Sub-Judge.

Alipore, the 24th November 1934. (2670—1)

In the 4th Court of the Sub-Judge of 24-Parganas.

INSOLVENCY CASE No. 457 OF 1934.

Mahadeva Chandra Khara of Burul, police-station Budge Budge, applicant.

To Sarbeswar Pramanik of Burul, police-station Budge Budge, and others, creditors.

ON the 17th day of November 1934 it was ordered that the matter of the petition of the applicant be heard on the 9th day of January 1935, and that the said applicant do attend to be examined by this Court on that date.

J. N. SEN, Sub-Judge.

Alipore, the 21st November 1934. (2672—1)

In the 4th Court of the Sub-Judge of 24-Parganas.

INSOLVENCY CASE No. 458 OF 1934.

Mirza Awalaza of Batikal, Metiaburuz, police-station Muchikhola, applicant.

To Guljarilal Sagarmal of Metiaburuz, police-station Muchikhola, and others, creditors.

ON the 17th day of November 1934 it was ordered that the matter of the petition of the applicant be heard on the 9th day of January 1935, and that the said applicant do attend to be examined by this Court on that date.

J. N. SEN, Sub-Judge.

Alipore, the 21st November 1934. (2673—1)

NOTICE TO CREDITORS OF APPLICATION FOR DISCHARGE.

Section 41(*1*) of the Provincial Insolvency Act, V of 1920.

In the Court of the District Judge at Alipore.

INSOLVENCY CASE No. 60 OF 1933.

The firm Bisseswar Lall Rambilash and its partners Bisseswar Lall and Rambilash of 4B, Puddopukur Road, Bhowanipore, 24-Parganas, applicants.

TAKE notice that the abovenamed insolvents have applied at the Court for their discharge, and that the Court has fixed the 9th day of January 1935, at 11 o'clock, for hearing the application.

Dated this 29th day of November 1934.

T. H. ELLIS, District Judge.

(2711—1)

NOTICE TO CREDITORS OF APPLICATION FOR DISCHARGE.

Section 41(*1*) of the Provincial Insolvency Act, V of 1920.

In the Court of the District Judge at Alipore.

INSOLVENCY CASE No. 11 OF 1934.

Horace Alfred Harle of 76, Traffic Quarters, Sealdah, applicant.

TAKE notice that the abovenamed insolvent has applied at the Court for his discharge, and that the Court has fixed the 9th day of January 1935, at 11 o'clock, for hearing the application.

Dated this 29th day of November 1934.

T. H. ELLIS, District Judge.

(2713—1)

MR. KANTI CHANDRA BASU, B.L., intends to be enrolled as an Advocate of the High Court, Calcutta.

(2771—4)

Public Service Commission (India).

APPLICATIONS are invited from statutory natives of India for the award of two scholarships tenable in India for training in aerodrome control duties. 2. Candidates must be not less than 20 or more than 30 years of age on the 1st March 1935. Minimum qualification a degree from a recognised University preferably in Science or Civil Engineering. Qualified Pilots and ex-Pilots, who have given up flying, but have gained experience of aviation in India, and can show evidence of a good general education, are also eligible. 3. Period of training about two years and six months with Rs. 150 per mensem as stipend. 4. Government servants eligible, if permitted to apply by their departments. 5. Last date for receipt of applications 31st January 1935. Prescribed application forms and further particulars can be obtained from the Secretary, Public Service Commission, Delhi. Applicants for forms must mention that they are required in connection with these scholarships.

Delhi, the 18th December 1934. (43—1)

Public Service Commission (India).

APPLICATIONS are invited for the post of Assistant Superintendent, Zoological Survey of India. (Women are not eligible.) 2. Government servants eligible if permitted to apply by their Departments. 3. The Government of India will give preference to a member of the Muhammadan community, if a person with necessary qualifications is available and is on the list of the candidates most suitable for appointment submitted by the Public Service Commission. 4. Candidates must have either a pass Degree (1st Division), or an Honours Degree, or a post-graduate Degree, in Zoology, or the equivalent of any one of such Degrees. They should be primarily Zoologists, having a sound scientific training in Zoology and a good general knowledge of the animal kingdom, in addition to being specialists in systematic Entomology. Practical experience in handling of Entomological collections and experience in research work desirable in addition. 5. Pay Rs. 300—25—650—40—850. Compensatory and house rent allowance permissible under Finance Department resolution No. D.5067-C.S.R., dated 10th October 1924, subject to cuts at present in force and such modifications, if any, as may be sanctioned hereafter. Pay of a Government servant, if appointed, to be regulated in accordance with the rules. 6. Appointment will be temporary for one year with prospects of confirmation. 7. Candidates who submitted applications for this post in response to the advertisement issued in 1934, need not renew their applications. 8. Last date for receipt of applications 22nd January 1935. Prescribed application forms and further particulars may be obtained from the Secretary, Public Service Commission, Delhi. Applicants for forms must state the name of the post.

Delhi, the 20th December 1934. (74—1)

APPLICATIONS are invited for the post of Head Clerk in the office of the Inspector of European Schools, Bengal, on the revised scale of pay at Rs. 110—15/2—200. The vacancy is open to clerks in the Inspectorate and in Government Colleges. Candidates must possess experience of work in a Government office, preferably in the Education Department with capacity for management of an office. Applications with copies of testimonials must reach the undersigned by the 15th January 1935.

R. WOLFENDEN,

Inspector of European Schools, Bengal.

40/1/A, Free School Street, Calcutta, the 19th December 1934.

WANTED a District Engineer for the District Board of Rajshahi on Rs. 400—20—650. Candidates must be qualified as per Bengal Government notifications No. 1781 L.S.-G., dated 12th December 1912, and No. 809, dated 18th February 1922.

Candidates should apply in sealed and registered covers addressed to Chairman, District Board, Rajshahi, and superscribed "Application for appointment of District Engineer" accompanied by all the necessary certificates in original and testimonials required by the rules together with a suitable envelope addressed and sufficiently stamped for registration in which they can be returned in the event of the application being unsuccessful. Applicants must state their age, experience, native district and place of residence.

Applications will be received up to the 7th February 1935.

The selected candidate will be on probation for one year to be confirmed thereafter on approved service. He will not be allowed any travelling allowance for joining the post.

KUMAR P. N. ROY, Chairman, District Board.

Rajshahi, the 22nd December 1934. (73—3)

THE Bengal and Madras Service Family Pension Fund which is provisionally managed and assisted by Government has for its object the provision of monthly pensions for the maintenance of the widows and children of subscribers and is open, with certain exceptions, to all active and pensioned members of the Uncovenanted service of Government (except those serving under the Government of Bombay), and to Local Fund servants earning pensions from Government. Some of the special features of the fund are (1) that widowed daughters incapable of re-marriage or children labouring under such mental or bodily infirmities as incapacitate them from earning their livelihood or preclude the possibility of marriage (in case of a daughter) are admitted to its benefits; and (2) that subscribers to the Widows and Daughters' branches are entitled to a refund of 30 per cent. of the premia paid, should the nominee predecease them after five years of admission. The second quinquennial valuation of the Fund has been completed by the Actuary to the Government of India, and his report discloses very favourable results. For forms of application and rules of the Fund apply to the Accountant-General, Bengal, Imperial Secretariat Buildings, Calcutta.

Estate Miss Ada Maud Irvine Connors, deceased.

PURSUANT to section 360 of Act XXXIX of 1925 and section 42 of Act XXVIII of 1866, the creditors and all persons interested in the Estate of Ada Maud Irvine Connors, late of Wellington Hotel, Harrogate, in the County of York, who died at that address on the 4th day of June 1934, and Letters of Administration to whose Estate were granted by the High Court, Calcutta, on the 6th day of December 1934, are hereby required to submit particulars of their claims to the undersigned on or before the 26th day of January 1935, after which date the administrator will distribute the assets, having regard only to the claims of which notice shall then have been received.

ORR, DIGNAM & Co.,

Solicitors to the administrator.

32, Dalhousie Square, South, Calcutta, 19th December 1934.

(2869—1)

Estate Mrs. Jane McMeekin, deceased.

PURSUANT to section 360 of Act XXXIX of 1925 and section 42 of Act XXVIII of 1866, the creditors and all persons interested in the Estate of Jane McMeekin, late of Torrington, 83, London Road, Tunbridge Wells, Kent, England, widow, who died at that address on the 27th day of December 1933, and Letters of Administration to whose Estate were granted by the High Court, Calcutta, on the 3rd day of December 1934, are hereby required to submit particulars of their claims to the undersigned on or before the 26th day of January 1935, after which date the administrator will distribute the assets, having regard only to the claims of which notice shall then have been received.

ORR, DIGNAM & Co.,

Solicitors to the administrator.

32, Dalhousie Square, South, Calcutta, 19th December 1934.

(2870—1)

Currency note.

PORTION of the following currency note of the Calcutta Circle is stated to have been destroyed, and payment of its value has been claimed by the person whose name is placed against the number. Any other person claiming a right to it is warned to communicate at once with the undersigned :—

Register No.	Number of note.	Value.	Name of claimant.
		Rs.	
WD 9 of 34/35.	8/78, 285743	100	Sital Mistri, C/o Upendra Nath Biswas, P. O. Hasimara, district Jalpaiguri.

K. K. CHETTUR, Currency Officer.

Currency Office, Calcutta, the 18th December 1934.

Lost.

A RECEIPT numbered 35674, dated 17th November 1934, and granted by the Public Debt Office, Imperial Bank of India, on submission of the undermentioned Government Promissory Note. Notice of loss has been given to the Public Debt Office, Imperial Bank of India, and the undersigned is about to apply for surrender of the security—

G. P. Note No.	Loan.	Amount.	Holder's name.
		Rs.	
F000835	5½ per cent., 1938-40.	500	Ananta Deb Mukherjee.

Name of the proprietor—ANANTA DEB MUKHERJEE.

Residence—33, Kashinath Chatterjee Lane, Shibpur (Howrah).

(2874—1)

In the matter of the Indian Companies Act, 1913, and

In the matter of the Comilla Mutual Provident Society.

NOTICE is hereby given that I have been appointed liquidator of the Comilla Mutual Provident Society under voluntary winding-up proceeding and a meeting of the creditors of the Society will be held on the 4th January 1935 at 5 p.m. at the registered office of the Society under section 209 of the Indian Companies Act. All persons interested are requested to attend the meeting.

BISWESWAR CHATTERJEE, Liquidator.

Comilla, the 19th December 1934. (48—1)

In the matter of the Indian Companies Act, VII of 1913, and

In the matter of Pioneer Loan Co. (Bengal), Ltd. (in liquidation).

NOTICE is hereby given that the final meeting of dissolution of the above-mentioned Company under section 217 of the Indian Companies Act will be held on the 2nd February 1935, at Jiban Babu's House, Farashganj Road, Dacca, at 4 p.m.

NALINI KANTA ROY, Liquidator.

Dacca, the 17th December 1934. (49—1)

In the matter of the Indian Companies Act, VII of 1913, and

In the matter of the Brahmanbaria Mukters' Bar Provident Society.

IT is hereby notified for general information and for information of creditors that the Brahmanbaria Mukters' Bar Provident Society has been voluntarily wound up and is in liquidation and the following gentlemen have been appointed liquidators :—

(1) Babu Gakul Ch. Datta, Mukter, Brahmanbaria.
(2) Babu Kumud Ch. Nandi, Mukter, Brahmanbaria.
(3) Babu Surendra Nath Gupta, Mukter, Brahmanbaria.
(4) Babu Woomesh Ch. Dev, Mukter, Brahmanbaria.
(5) Maulvi Alimaddin Ahmed, Mukter, Brahmanbaria.

M. C. BHATTACHARYYA, Secretary.

Brahmanbaria, the 17th December 1934. (2856—1)

In the matter of the Provident Insurance Societies Act, and

In the matter of the Taz Benevolent Society.

NOTICE is hereby given that at an extraordinary general meeting held on the 14th December 1934, the abovenamed Society has, by an extraordinary resolution, been put into voluntary liquidation and Sj. Charu Chandra Choudhury, c/o Rasamoy Choudhury of Gangchar, Comilla, has been appointed the liquidator.

C. C. CHAUDHURY, Liquidator.

Comilla, the 18th December 1934. (2871—1)

In the matter of the Provident Insurance Societies Act, and

In the matter of Taz Benevolent Society.

NOTICE is hereby given that a meeting of the creditors of the abovenamed Society will be held on the 6th January 1935, at 4-30 p.m., at the office of the liquidator, Gangchar, Comilla, in the house of Sj. Rasamoy Choudhuri.

C. C. CHAUDHURY, Liquidator.

Comilla, the 18th December 1934. (2872—1)

In the matter of the Indian Companies Act, 1913, and

In the matter of Indian Seaside Improvement Trust, Ltd.

AN extraordinary general meeting of Indian Seaside Improvement Trust, Ltd., will be held at 1, Ray Street, Calcutta, at 11 a.m., on the 30th January 1935, under section 217 of the Indian Companies Act, 1913, for the purpose of receiving the final accounts of the liquidator, showing how the winding up has been conducted and any other explanations and that the books of the Company be destroyed.

S. N. DEY, Liquidator.

Calcutta, the 10th December 1934. (2778—1)

In the matter of the Indian Companies Act, 1913, and

In the matter of Masnodih Mica Mines, Ltd.

AN extraordinary general meeting of Masnodih Mica Mines, Ltd., will be held at 1, Ray Street, Calcutta, at 11 a.m., on 30th January 1935, under section 217 of the Indian Companies Act, 1913, for the purpose of receiving the final accounts of the liquidator, showing how the winding up has been conducted and any other explanations and that the books be destroyed.

S. N. DEY, Liquidator.

Calcutta, the 10th December 1934. (2779—1)

In the matter of the Indian Companies Act, and

In the matter of the East Nandi Coal Company, Limited (in liquidation).

NOTICE is hereby given that a meeting of the creditors of the East Nandi Coal Company, Limited (in liquidation), will be held at 29, Strand Road, Calcutta, the registered office of the Company, on Tuesday, the 15th January 1935, at 2 p.m., to receive the report of the liquidator for winding up the Company's affairs.

SANTOK CHAND LODHA, Liquidator.

Calcutta, the 18th December 1934. (2849—1)

In the matter of the Indian Companies Act, and

In the matter of the Bengal Coke and Coal Products, Limited (in liquidation).

NOTICE is hereby given that a meeting of the creditors of the Bengal Coke and Coal Products, Limited (in liquidation), will be held at 29, Strand Road, Calcutta, the registered office of the Company, on Tuesday, the 15th January 1935, at 3 p.m., to receive the report of the liquidator for winding up the Company's affairs.

BHAGIRATH MOHTA, Liquidator.

Calcutta, the 18th December 1934. (2850—1)

In the matter of the Indian Companies Acts, 1913-1920, and

In the matter of the Tonijan Tea Company, Limited (in liquidation).

NOTICE is hereby given pursuant to section 209 of the Indian Companies Act, 1913, that a meeting of the creditors of the abovenamed Company will be held at 4, Lyons Range, Calcutta, on Friday, the 11th day of January 1935, at 4 o'clock, in the afternoon.

DAVID MITCHELL, *for* self and co-liquidators.

Calcutta, 4, Lyons Range, the 19th day of December 1934. (2859—1)

In the matter of the Indian Companies Acts, 1913-1920, and

In the matter of the Tonijan Tea Company, Limited (in liquidation).

NOTICE is hereby given that at an extraordinary general meeting of the members of the abovenamed Company duly convened and held at 4, Mangoe Lane, in the town of Calcutta, on the 29th day of November 1934, the resolution below mentioned was passed as an extraordinary resolution and at another extraordinary general meeting held at the same place on the 15th day of December 1934 the said resolution was duly confirmed as a special resolution :—

"That it is desirable to wind up the Company, and accordingly that the Company be wound up voluntarily and that Messrs. Clarence George Ashworth, Edwin John Carter, James Orr and David Mitchell, all of No. 4, Lyons Range, Calcutta, be and they are hereby appointed Liquidators for the purposes of such winding up with joint and several powers at a remuneration to be arranged between them and the Managing Agents of the Company".

DAVID MITCHELL, *for* self and co-liquidators.

Calcutta, 4, Lyons Range, the 19th day of December 1934. (2858—1)

In the matter of the Indian Companies Act, and

In the matter of Devereux & Co., Ltd.

AT an extraordinary general meeting of the members of the abovenamed Company duly convened and held at Lucknow on the 30th day of November 1934, the following resolution was duly passed, and at a subsequent extraordinary general meeting of the members of the said Company, also duly convened and held at the same place on the 17th day of December 1934, such resolution was duly confirmed as a special resolution, viz., "That the Company be wound up voluntarily and that Mr. R. F. Walker be appointed liquidator for the purposes of such winding up".

R. BIRNIE, Chairman

CLARKE, RAWLINS, KER & CO., Solicitors.

6, Old Post Office Street, Calcutta, the 20th December 1934.

(39—1)

In the matter of the Indian Companies Act, 1913 (VII of 1913), and

In the matter of Sonada Industries, Ltd.

NOTICE is hereby given that the name of Sonada Industries, Ltd., has, this day in pursuance of section 247 of the Act, been struck off the register and that the Company is dissolved.

N. K. MAJUMDER, Registrar, Joint Stock Companies.

Calcutta, the 19th December 1934.

In the matter of the Indian Companies Act, 1913 (VII of 1913), and

In the matter of Narayan Co., Ltd.

NOTICE is hereby given that the name of Narayan Co., Ltd., has, this day in pursuance of section 247 of the Act, been struck off the register and that the Company is dissolved.

N. K. MAJUMDER, Registrar, Joint Stock Companies.

Calcutta, the 19th December 1934.

In the matter of the Indian Companies Act, 1913 (VII of 1913), and

In the matter of General Stores, Ltd.

NOTICE is hereby given that the name of General Stores, Ltd., has, this day in pursuance of section 247 of the Act, been struck off the register and that the Company is dissolved.

N. K. MAJUMDER, Registrar, Joint Stock Companies.

Calcutta, the 19th December 1934.

In the matter of the Indian Companies Act, 1913 (VII of 1913), and

In the matter of Asiatic Chemical Works, Ltd.

NOTICE is hereby given that the name of Asiatic Chemical Works, Ltd., has, this day in pursuance of section 247 of the Act, been struck off the register and that the Company is dissolved.

N. K. MAJUMDER, Registrar, Joint Stock Companies.

Calcutta, the 19th December 1934.

In the matter of the Indian Companies Act, 1913 (VII of 1913), and

In the matter of E. R. Joseph & Co., Ltd.

NOTICE is hereby given that the name of E. R. Joseph & Co., Ltd., has, this day in pursuance of section 247 of the Act, been struck off the register and that the Company is dissolved.

N. K. MAJUMDER, Registrar, Joint Stock Companies.

Calcutta, the 19th December 1934.

In the matter of the Indian Companies Act, 1913 (VII of 1913), and

In the matter of Bagda Sugar Mills, Ltd.

NOTICE is hereby given that the name of Bagda Sugar Mills, Ltd., has, this day in pursuance of section 247 of the Act, been struck off the register and that the Company is dissolved.

N. K. MAJUMDER, Registrar, Joint Stock Companies.

Calcutta, the 19th December 1934.

In the matter of the Indian Companies Act, 1913 (VII of 1913), and

In the matter of White Brothers, Ltd.

NOTICE is hereby given that the name of White Brothers, Ltd., has, this day in pursuance of section 247 of the Act, been struck off the register and that the Company is dissolved.

N. K. MAJUMDER, Registrar, Joint Stock Companies.

Calcutta, the 19th December 1934.

In the matter of the Indian Companies Act, 1913 (VII of 1913), and

In the matter of James Motor Transport, Ltd.

NOTICE is hereby given that the name of James Motor Transport, Ltd., has, this day in pursuance of section 247 of the Act, been struck off the register and that the Company is dissolved.

N. K. MAJUMDER, Registrar, Joint Stock Companies.

Calcutta, the 19th December 1934.

In the matter of the Indian Companies Act, 1913 (VII of 1913), and

In the matter of Tripura Co., Ltd.

NOTICE is hereby given that, on the expiration of three months from date, the name of Tripura Co., Ltd., will, unless cause is shown to the contrary, be struck off the register, and the Company will be dissolved.

N. K. MAJUMDER, Registrar of Companies under Act VII of 1913.

Calcutta, the 19th December 1934.

NOTICE.

Government of India.

ARMY DEPARTMENT.

THE services of pensioned and discharged Indian Officers and soldiers required for employment in civil capacities may be obtained on application to—

(i) The Recruiting Officers of the class required at the following stations—

(*a*) Mussalmans—
Peshawar for Pathans; Rawalpindi, Lahore and Jullundur for Punjabi Mussalmans; Ajmer for Rajputana Mussalmans and Poona for Dekhan Mussalmans.

(*b*) Hindus, etc.—
Lahore and Jullundur for Sikhs and Dogras; Delhi for Brahmans, Rajputs, Jats, Gujars and Ahirs i Ajmer for Rajputana Hindus (*i.e.*, Rajputs, Jats etc.); Poona for Mahrattas and Maymyo for Burma classes.

(ii) The Pension Paymaster, Madras, for Madrasis.
(iii) The Assistant Military Secretary (Personal) to His Excellency the Commander-in-Chief (Army Headquarters), for pensioned Indian Officers of all classes required for employment as passenger superintendents on Indian Railways.

All applications from employers should include the particulars shown below and should be addressed to the officers referred to at the places abovementioned :—

(1) Name of person or firm offering employment.

(2) Nature of employment and place at which it is offered.

(3) Proposed pay and period for which employment is offered.

(4) Whether railway fare to place of employment will be paid or not.

(5) Whether return railway fare will be paid in case of a pensioner being discharged for no fault of his own, or after a definite period of service.

(6) Class of men required, *e.g.*, Sikh, Pathan, Dogra, etc.

F. G. MOORE, Lieut.-Colonel,

Assistant Secretary to the Government of India.

INDIAN LAW REPORTS.

CALCUTTA SERIES of Indian Law Reports from 1876 onwards are available in the Publication Branch, Bengal Government Press, Alipore, Bengal. Enquiries for these may be made to Superintendent, Government Printing, at the above address. Monthly parts from 1930 onwards are available at the Sales Department, Writers' Buildings, Calcutta—

Prices.

From 1876 to 1933— Rs.

Complete yearly volume 12 { (postage Rs. 3 Inland). (,, Rs. 4 Foreign).

From 1930 onwards—

Monthly parts only .. 2 { (As. 2 Inland). (As. 3 Foreign).

Enquiries for other series than Calcutta must be made to the publishers concerned.

C. R. BATTERSBY,

Supdt., Govt. Printing, Bengal.

Alipore, the 6th December 1934.

GOVERNMENT OF BENGAL.

FINANCE DEPARTMENT.

Miscellaneous.

Calcutta, the 20th October 1927.

NOTICE.

IN supersession of the orders issued in notice, dated the 10th June 1922, published in the *Calcutta Gazette*, dated the 14th June 1922, the following revised rates have been fixed for the *Calcutta Gazette* and its parts with effect from the date of this notice. This will not, however, affect the subscriptions already paid at previous rates until they have expired :—

		With postage.
Per annum—	Rs.	Rs. A.
Entire	31	37 8
Part I	8	10 0
Part IA	2	3 0
Part IB	5	7 0
Part II	5	7 0
Parts III and IV together, or any one of them	1	1 8
Parts V and VI together, or any one of them	2	3 0
Bengal Library Catalogue ..	2	3 0
Jury Lists	3	4 0
Supplement	7	9 0

		Postage according to weight.
Per issue—	Rs.	A.
Entire Gazette (excluding Bengal Library Catalogue and Jury Lists) ..	0	12
Part I	0	4
Part IA	0	2
Part IB	0	4
Part II	0	4
Parts III and IV together, or any one of them	0	2
Parts V and VI together, or any one of them	0	2
Bengal Library Catalogue ..	0	8
Jury Lists	1	0
Supplement	0	4

2. This will not affect the orders relating to specially heavy issues, issued in Notice No. 1874 Mis., dated the 22nd August 1923, published in the *Calcutta Gazette*, dated the 29th August 1923.

J. A. WOODHEAD,

Secretary to the Government of Bengal.

Descriptive Catalogue of Sanskrit Manuscripts.

PARTS I, II and III of a Descriptive Catalogue of the Sanskrit Manuscripts in the Library of the Calcutta Sanskrit College, prepared by Pandit Hrishikesh Sastri and Babu Siva Chandra Gui, M.A., B.L., of that College, are offered to the public for sale. The Catalogue having to be completed in 23 parts the price of each part is 12 annas a copy exclusive of postage. Copies can be obtained from the Principal of the Sanskrit College, Calcutta.

Imperial Library.

(Secretariat Buildings, 6, Esplanade East, Calcutta.)
Open on—

Week days and Saturdays from 10 a.m. to 7 p.m.
Sundays and Gazetted holidays from 2 p.m. to 5 p.m.

THE Imperial Library is also a Lending Library. It is free to all except children. There is no subscription to pay.

K. M. ASADULLAH, Librarian.

CINCHONA FACTORY PRODUCTS.

By order of the Government of Bengal Cinchona Factory Products as manufactured and packed at the Cinchona Factory, Mungpoo, Darjeeling district, will be sold and distributed by the Superintendent of the **Presidency Jail**, *in original packages* as received from the Mungpoo Factory, at the rates herein noted **from the 1st May 1926 :—**

Quinine Sulphate.

For 60 lbs. and upwards at a time .. Rs. 18 per lb.
For 6 lbs. and over but less than 60 lbs. at a time .. .. .. „ 19 „
For any quantity less than 6 lbs. .. „ 20 „

Quinine Hydrochloride.

For 60 lbs. and upwards at a time .. Rs. 23 per lb.
For 6 lbs. and over but less than 60 lbs. at a time .. .. .. „ 24 „
For any quantity less than 6 lbs. .. „ 25 „

Quinine Di-Hydrochloride.

For 60 lbs. and upwards at a time .. Rs. 25 per lb.
For 6 lbs. and over but less than 60 lbs. at a time .. .. .. „ 26 „
For any quantity less than 6 lbs. .. „ 27 „

Quinidine Sulphate.

For 60 lbs. and upwards at a time .. Rs. 20 per lb.
For 6 lbs. and over but less than 60 lbs. at a time .. .. .. „ 21 „
For any quantity less than 6 lbs. .. „ 22 „

Cinchonidine Sulphate.

For 60 lbs. and upwards at a time .. Rs. 25 per lb.
For 6 lbs. and over but less than 60 lbs. at a time .. .. .. „ 26 „
For any quantity less than 6 lbs. .. „ 27 „

Cinchonine Sulphate.

For 60 lbs. and upwards at a time .. Rs. 12 per lb.
For 6 lbs. and over but less than 60 lbs. at a time .. .. .. „ 13 „
For any quantity less than 6 lbs. .. „ 14 „

Cinchona Febrifuge (Powder).

For 60 lbs. and upwards at a time .. Rs. 9 per lb.
For 6 lbs. and over but less than 60 lbs. at a time .. .. .. „ 9 „
For any quantity less than 6 lbs. .. „ 10 „

Cinchona Febrifuge (Tablets).

For 60 lbs. and upwards at a time .. Rs. 10 per lb.
For 6 lbs. and over but less than 60 lbs. at a time .. .. .. „ 10 „
For any quantity less than 6 lbs. .. „ 11 „

Quinoidine (Tablets).

For 60 lbs. and upwards at a time .. Rs. 5 per lb.
For 6 lbs. and over but less than 60 lbs. at a time .. .. .. „ 5 „
For any quantity less than 6 lbs. .. „ 6 „

Quinoidine (In Mass).

For 60 lbs. and upwards at a time .. Rs. 4 per lb.
For 6 lbs. and over but less than 60 lbs. at a time .. .. .. „ 4 „
For any quantity less than 6 lbs. .. „ 5 „

Cinchona Bark (in 50 pound original bags).

Per bag .. .. .. Rs. 25.

per box of 200 tablets each.

Quinine Tablets—Rs. 2-8 (Bengal), Rs. 3 (outside Bengal)
Rs. 15-8-0 per lb.

Transit charges extra in every case.

Quinine Sulphate is for sale to Government Institutions and Missionaries only. It is not for sale to Private Firms or the General Public.

Cinchona Febrifuge in Powder and Tablet form (when in stock) is for sale to Government Institutions Missionaries and the General Public.

Quinine Sulphate will be supplied to Hospitals and Dispensaries of this Presidency only at the wholesale rate of Rs. 18 per lb., irrespective of quantities. For all other purchasers the rates given above will apply.

Five and ten boxes of Quinine Tablets are sold to the public at the concession rates which will be intimated in application.

Provinces other than Bengal, Bihar and Orissa and Assam will get their supplies of Sulph. Quinine from the Director, Botanical Survey of India, Sibpur, Howrah.

Local sale at the jail gate from 10 to 12½ noon.

The system of payment is by—*Cash in advance*—by "*Treasury Challans*," which should accompany the order or indent.

In cases where this is not possible, payment should be made by "*Remittance Transfer Receipts*" or crossed "*Cheques*."

Indents unaccompanied by cash in advance will be sent Value Payable Post. Credit sale is not allowed except under special circumstances.

In the case of *Government officers* payments will be recovered by *Book Transfer, i.e., Countersigned Invoices*, in the event of *Cash* not accompanying the indent by "*Treasury Challans*," *Remittance Transfer Receipt or Cheque.*

2. Price and postage must accompany the price of the drug (when the drug is required by post).

The name of the Railway and Steamer Station or Post Office must be written distinctly when the parcels are required by Rail, Steamer or by Post. Railway parcels are sent by passenger train only.

A scale of postage is given below.

	1 oz.	2 ozs.	4 ozs.	½ lb.	¾ lb.	1 lb.
	As.	As.	As.	As.	As.	Rs. A.
Quinine Sulph. ..	..	..	7	7	11	0 11
Cinchona Feb. ..	..	..	7	7	11	0 11
Cinchona Feb. Tablets	..	..	7	7	11	0 11
Quinoidine Tablets ..	..	..	..	..	..	1 13
Quinine Hydrochlor. ..	5	5	7	7	..	0 11
Quinine Di-hydrochlor.	5	5	7	7	..	0 11
Quinine Tablets ..	..	..	7	7	11	0 11

	1¼ lb.	2 lb.	3 lb.	4 lb.	5 lb.	6 lb.
	Rs. A.	Rs. A.	Rs. A.	Rs. A.	Rs. A.	Rs. A.
Quinine Sulph. ..	0 15	1 3	1 7	1 15	2 7	2 15
Cinchona Feb. ..	0 15	0 15	1 7	1 11	1 15	2 7
Cinchona Feb. Tablets	1 3	1 3	1 11	1 15	2 7	2 15
Quinoidine Tablets ..	..	2 3	3 3	..	..	..
Quinine Hydrochlor. ..	1 1	0 15	1 7	1 11	..	..
Quinine Di-hydrochlor.	1 1	0 15	1 13	2 5	..	..
Quinine Tablets ..	0 15	0 14	1 7	1 11	1 15	2 3

Two different drugs are not packed in the same parcel and postage must be paid separately for each kind.

N.B.—Postage stamps are not accepted as revenue.

Government reserve the right to alter the price without notice.

Registered No. C207

No. 1 of 1935

The Calcutta Gazette

THURSDAY, JANUARY 3, 1935.

CONTENTS:

	PAGE.		PAGE.
Statement under the Cotton Ginning and Pressing Factories Act, 1925 ..	1	Weather and Crop Report for the week ending 26th December 1934 ..	21—24
Daily Rainfall recorded in Bengal for the month of November 1934	2—17	Prices-current (wholesale and retail) of food-grains, salt, etc., in the districts of Bengal for the first half of December 1934	25—28
Statement showing water-levels of certain rivers in Bengal for the month of April 1934	18—19	Statements of weekly gauge readings on certain rivers in Bengal	29—30
Abstract of audited accounts of the University of Dacca for the session 1933-34	20	Calcutta Improvement Trust Notification	30
		Errata to Daily Rainfall recorded in Bengal for the month of May 1934 ..	31

SUPPLEMENT.

Official Papers.

FORM C—BENGAL.

STATEMENT OF COTTON PRESSED IN THE BENGAL PRESIDENCY FOR THE WEEK ENDING THE 21st DECEMBER 1934.

[Section 5 (2) of the Cotton Ginning and Pressing Factories Act, 1925.]

Name of Division or block.	Number of bales pressed.				District included in the block.
	During the week.	During the corresponding week last year.	Since 1st September 1934 (the date prescribed by the Local Government as the commencement of the season).	During the corresponding period last year.	
The Bengal Presidency	....	117	2,120	2,865	All districts in the Presidency.

J. B. McBRIDE,
Chief Inspector of Factories, Bengal.

DAILY RAINFALL RECORDED IN BENGAL

Note—The total and the average rainfall for all districts have been

Division and district.	Station.	1	2	3	4	5	6	7
Presidency.								
24-Parganas ..	Saugar Island (Obsy.) ..	..	..	0·33	0·15	..	..	..
	Diamond Harbour ..	..	..	0·24	..	..	..	..
	Budge-Budge	..	0·01	0·71	0·29	..	0·02	..
	Canning Town	..	..	..	..	..	..	..
	Alipore (Obsy.)	..	0·01	0·53	0·25	..	..	0·07
	Barrackpore	0·15	0·10	0·05	..	..	..	..
	Dum-Dum	..	1·07	..	..	..	..	..
	Baraset	0·10	..	..	..	..	..	..
	Basirhat	..	0·01	1·26	0·06	0·01	..	..
	Gosaba	..	..	..	..	0·25	..	..
Nadia ..	Ranaghat	..	..	0·90	0·40	..	..	..
	Krishnagar (Obsy.) ..	..	0·10	0·02	0·01	..	..	..
	Chuadanga	..	0·08	0·06	0·03	..	..	..
	Meherpore	0·05	0·12	0·05	..	..	0·35	..
	Kushtia	..	..	0·14	0·15	0·12	..	3·20
	Haringhata	..	0·62	0·67	..	..	..	..
Murshidabad ..	Kandi	..	0·39	..	..	..	..	..
	Berhampore (Obsy.) ..	..	..	..	..	..	..	0·04
	Lalbagh	..	..	..	..	..	..	..
	Azimgunj*							
	Jangipur	..	..	0·05	..	..	..	..
	Lalgola	..	..	..	..	..	..	..
	Akriganj	..	..	..	..	..	..	0·15
	Patkabari	..	..	..	..	..	..	..
	Dumkal	..	..	0·14	..	..	..	..
	Kallyangunj (Ishanpur) ..	..	0·02	..	..	..	..	..
	Khargram	..	..	..	..	..	..	..
	Bharatpore	..	..	..	..	..	..	..
Jessore ..	Narail	..	5·35	0·52	0·03	0·03	..	..
	Jessore (Obsy.)	..	0·07	0·96	0·78	..	..	..
	Jhenida	0·11	0·21	0·15	..	..	..	..
	Magura	..	0·40	0·60	..	0·05	..	..
	Bongaon	..	0·02	1·04	0·48	..	..	..
Khulna ..	Satkhira (Obsy.)	0·01	0·01	1·18	0·29	0·05	0·01	0·02
	Bagerhat	..	0·75	0·40	0·10	0·60	0·40	..
	Khulna (Obsy.)	..	0·02	0·74	0·27	0·01	0·47	2·17
	Kaliganj	0·11	0·23	0·25	0·09	0·10	0·07	0·11
	Nakipur	..	..	0·37	0·03	..	..	— 0·80
—	Dumuria	..	0·30	0·50	0·15	..	0·08	— 0·90
	Rampal	0·04	..	0·06	..	..	0·16	0·05
	Kalaroa	..	1·61	0·40	..	..	..	..
	Paikgachha (Raruli) ..	..	..	1·18	..	0·08	1·18	1·00
	Mullahat	..	..	0·32	0·48	..	..	1·51
	Morelganj*							
	Ismailkati	..	1·32	0·11	..	..	..	..
Burdwan.								
Burdwan ..	Kalna	..	0·23	0·06	..	..	..	..
	Burdwan (Obsy.)	..	0·27	0·03	..	..	..	..
	Katwa	..	..	0·20	..	..	..	0·80
	Asansol (Obsy.)	..	0·03	..	..	..	..	0·37
	Mankar	..	..	..	..	..	0·29	..
	Mangalkot	..	..	..	..	..	..	..
	Royna	..	0·17	..	..	..	..	..
	Monteswar	..	..	..	..	..	..	..
Birbhum ..	Suri	..	0·01	..	..	..	..	0·02
	Hetampur	..	..	0·03	..	..	..	..
	Rampurhat	..	..	..	..	..	..	..
	Bolpur	..	..	..	..	..	..	0·19
	Murarai*							
	Labpur	..	..	..	..	..	..	..
	Nalhati	..	..	..	..	..	..	..
	Mayureswar	..	..	..	..	..	..	..

*Not reported.

FOR THE MONTH OF NOVEMBER 1934.

calculated using the data of only those stations for which normals are available.

8	9	10	11	12	13	14	15	16	17	18	19	20
..	..	..	..	..	..	..	..	..	..	..	..	..
..	..	..	..	..	..	..	..	..	..	..	..	..
..	..	..	..	..	..	..	..	..	..	..	..	..
..	..	..	..	..	..	..	..	..	..	..	..	..
..	..	..	..	..	..	..	..	..	..	..	..	..
..	..	..	..	..	..	..	..	..	..	..	..	..
..	..	..	..	..	..	..	..	..	..	..	..	..
..	..	..	..	..	..	..	..	..	..	..	..	..
..	..	..	..	..	..	..	..	..	..	..	..	..
..	..	..	..	..	..	..	..	..	..	..	..	..
..	..	..	..	..	..	..	..	..	..	..	..	..
..	..	..	..	..	..	..	..	..	..	..	..	..
..	..	..	..	..	..	..	..	..	..	..	..	..
..	..	..	..	..	..	..	..	..	..	..	..	..
..	..	..	..	..	..	..	..	..	..	..	..	..
..	..	..	..	..	..	..	..	..	..	..	..	..
..	..	..	..	..	..	..	..	..	..	..	..	..
..	..	..	..	..	..	..	..	..	..	..	..	..
..	..	..	..	..	..	..	..	..	..	..	..	..
..	..	..	..	..	..	..	..	..	..	..	..	..
..	..	..	..	..	..	..	..	..	..	..	..	..
..	..	..	..	..	..	..	..	..	..	..	..	..
..	..	..	..	..	..	..	..	..	..	..	..	..
..	..	..	..	..	..	..	..	..	..	..	..	..
..	..	..	..	..	..	..	..	..	..	..	..	..
..	..	..	..	..	..	..	..	..	..	..	..	..
..	..	..	..	..	..	..	..	..	..	..	..	..
..	..	..	..	..	..	..	..	..	..	..	..	..
..	..	..	..	..	..	..	..	..	..	..	..	..
..	..	..	..	..	..	..	..	..	..	..	..	..
..	..	..	..	..	..	..	..	..	..	..	..	..
..	..	..	..	..	..	..	..	..	..	..	..	..
..	..	..	..	..	..	..	..	..	..	..	..	..
..	..	..	..	..	..	..	..	..	..	..	..	..
..	..	..	..	..	..	..	..	..	..	..	..	..
..	..	..	..	..	..	..	..	..	..	..	..	..
..	..	..	..	..	..	..	..	..	..	..	..	..
..	..	..	..	..	..	..	..	..	..	..	..	..
0·10	..	..	..	..	..	..	..	..	..	..	.	..
..	..	..	..	..	..	..		..	..	..	..	..
..	..	..	..	..	..	..	..	..	..	..	..	..
..	..	..	..	..	..	..	..	..	..	..	..	..
..	..	..	..	..	..	..	..	..	..	..	..	..
..	..	..	..	..	..	..	..	..	..	..	..	..
..	..	..	..	..	..	..	..	..	..	..	..	..
..	..	..	..	..	..	..	..	..	..	..	..	..
..	..	..	..	..	..	..	..	..	..	..	..	..
..	..	..	..	..	..	..	..	..	..	..	..	..
..	..	..	..	..	..	..	..	..	..	..	..	..
..	..	..	..	..	..	..	..	..	..	..	..	..
..	..	..	..	..	..	..	..	..	..	..	..	..
..	..	..	..	..	..	..	..	..	..	..	..	..
..	..	..	..	..	..	..	..	..	..	..	..	..
..	..	..	..	..	..	..	..	..	..	..	..	..
..	..	..	..	..	..	..	..	..	..	..	..	..
..	..	..	..	..	..	..	..	..	..	..	..	..
..	..	..	..	..	..	..	..	..	..	..	..	..
..	..	..	..	..	..	..	..	..	..	..	..	..

DAIY RAINFALL RECORDED IN BENGAL

Division and district.	Station.	21	22	23	24	25	26	27
Presidency.								
24-Parganas ..	Saugar Island (Obsy.) ..	..	..	..	..	..	..	..
	Diamond Harbour ..	..	..	..	..	..	..	..
	Budge-Budge	..	..	..	..	..	..	..
	Canning Town	..	..	..	..	..	..	..
	Alipore (Obsy.)	..	..	..	..	..	..	..
	Barrackpore	..	..	..	..	..	..	..
	Dum-Dum	..	..	..	..	..	..	..
	Baraset	..	..	..	..	..	..	..
	Basirhat	..	..	..	..	..	..	..
	Gosaba	..	..	..	..	..	..	..
Nadia ..	Ranaghat	..	..	..	..	..	..	..
	Krishnagar (Obsy.) ..	..	..	..	..	..	..	..
	Chuadanga	..	..	..	..	..	..	..
	Meherpore	..	..	..	..	..	..	..
	Kushtia	..	..	..	..	..	..	..
	Haringhata	..	..	..	..	..	..	..
Murshidabad ..	Kandi	..	..	..	..	..	..	..
	Berhampore (Obsy.) ..	..	..	..	..	..	..	..
	Lalbagh	..	..	..	..	..	..	..
	Azimgunj*							
	Jangipur	..	..	..	..	..	..	..
	Lalgola	..	..	..	..	..	..	..
	Akriganj	..	..	..	..	..	..	..
	Patkabari	..	..	..	..	..	..	..
	Dumkal	..	..	..	..	..	..	..
	Kallyangunj (Ishanpur) ..	..	..	..	..	..	..	..
	Khargram	..	..	..	..	..	..	..
	Bharatpore	..	..	..	..	..	..	..
Jessore ..	Narail	..	..	..	..	..	..	..
	Jessore (Obsy.)	..	..	..	..	..	..	..
	Jhenida	..	..	..	..	..	..	..
	Magura	..	..	..	..	..	..	..
	Bongaon	..	..	..	..	..	..	..
Khulna ..	Satkhira (Obsy.)	..	..	..	..	..	..	..
	Bagerhat	..	..	..	..	..	..	..
	Khulna (Obsy.)	..	..	..	..	..	..	..
	Kaliganj	..	..	..	..	..	..	..
	Nakipur	..	..	..	..	..	..	..
	Dumuria	..	..	..	..	..	..	..
	Rampal	..	..	..	..	..	..	..
	Kalaroa	..	..	..	..	..	..	..
	Paikgachha (Raruli) ..	..	..	..	..	..	..	..
	Mullahat	..	..	..	..	..	..	..
	Morelganj*							
	Ismailkati	..	..	..	..	..	..	..
Burdwan.								
Burdwan ..	Kalna	..	..	..	..	..	..	..
	Burdwan (Obsy.) ..	..	..	..	..	..	..	..
	Katwa	..	..	..	..	..	..	..
	Asansol (Obsy.)	..	..	..	..	..	..	..
	Mankar	..	..	..	..	..	..	..
	Mangalkot	..	..	..	..	..	..	..
	Royna	..	..	..	..	..	..	..
	Monteswar	..	..	..	..	..	..	..
Birbhum ..	Suri	..	..	..	..	..	..	..
	Hetampur	..	..	..	..	..	..	..
	Rampurhat	..	..	..	..	..	..	..
	Bolpur	..	..	..	..	..	..	..
	Murarai*							
	Labpur	..	..	..	..	..	..	..
	Nalhati	..	..	..	..	..	..	..
	Mayureswar	..	..	..	..	..	..	..

*Not reported.

FOR THE MONTH OF NOVEMBER 1934.

28	29	30	31	Number of rainy days.	Average number of rainy days.	Total rainfall for the month.	Normal rainfall for the month.	Heaviest rainfall during month.	Total rainfall from 1st October to 30th November 1934.	Normal rainfall from 1st October to 30th November 1934
..	..	..		2	1·4	0·48	1·47	0·33	6·51	9·61
..	..	..		1	1·2	0·24	0·91	0·24	7·04	6·11
..	..	..		2	1·1	1·03	0·65	0·71	6·48	5·46
..	..	..		Nil	1·2	Nil	1·13	Nil	6·68	5·83
..	..	..		2	1·0	0·86	0·66	0·53	6·22	4·85
..	..	..		2	1·0	0·30	0·71	0·15	2·15	4·53
..	..	..		1	1·0	1·07	0·61	1·07	6·35	5·06
..	..	..		1	1·0	0·10	0·58	0·10	3·80	4·89
..	..	..		1	1·0	1·34	0·63	1·26	7·90	5·23
..	..	..		1	(*n*)	0·25	(*n*)	0·25	9·24	(*n*)
..	..	..		2	0·8	1·30	0·69	0·90	2·30	4·29
..	..	..		1	1·2	0·13	0·98	0·10	5·25	5·36
..	..	..		Nil	0·7	0·17	0·90	0·08	5·45	5·25
..	..	..		2	0·8	0·57	0·60	0·35	5·48	4·72
..	..	..		4	0·9	3·61	0·69	3·20	10·05	5·18
..	..	..		2	0·5	1·29	0·32	0·67	3·89	2·83
..	..	..		1	0·8	0·39	0·71	0·39	1·63	4·49
..	..	..		Nil	0·7	0·04	0·62	0·04	0·40	4·82
..	..	..		Nil	0·7	Nil	0·66	Nil	0·64	5·22
					0·6		0·46			4·48
..	..	..		Nil	0·6	0·05	0·46	0·05	2·79	4·28
..	..	..		Nil	0·6	Nil	0·46	Nil	2·01	4·43
..	..	..		1	0·7	0·15	0·50	0·15	2·51	4·26
..	..	..		Nil	0·8	Nil	0·70	Nil	1·66	3·99
..	..	..		1	0·6	0·14	0·63	0·14	2·00	4·02
..	..	..		Nil	0·7	0·02	0·69	0·02	3·23	5·39
..	..	..		Nil	(*n*)	Nil	(*n*)	Nil	2·05	(*n*)
..	..	..		Nil	(*n*)	Nil	(*n*)	Nil	1·53	(*n*)
..	..	..		2	0·9	5·93	0·80	5·35	17·42	5·27
..	..	..		2	1·1	1·81	1·02	0·96	7·62	5·91
..	..	..		3	1·0	0·47	0·74	0·21	8·15	5·19
..	..	..		2	1·0	1·05	0·78	0·60	5·05	5·03
..	..	..		2	0·9	1·54	0·56	1·04	8·39	5·18
..	..	..		2	0·9	1·57	0·65	1·18	12·18	3·88
..	..	..		5	1·2	2·25	0·97	0·75	12·09	6·10
..	..	..		4	1·4	3·68	1·07	2·17	11·66	4·19
..	..	..		5	0·9	0·96	0·79	0·25	9·17	7·73
..	..	..		2	1·0	1·20	0·96	0·80	10·52	6·09
..	..	..		4	0·8	1·93	0·81	0·90	7·41	5·65
..	..	..		1	1·0	0·31	1·06	0·16	9·11	6·25
..	..	..		3	1·0	2·11	0·55	1·61	9·86	5·87
..	..	..		3	0·8	3·44	0·77	1·18	12·25	6·83
..	..	..		3	1·0	2·31	1·08	1·51	13·48	6·94
					1·3		1·31			7·45
..	..	..		2	1·2	1·43	0·80	1·32	8·32	6·24
..	..	..		1	0·8	0·29	0·86	0·23	3·02	4·60
..	..	..		1	1·0	0·30	0·86	0·27	2·16	4·29
..	..	..		2	0·7	1·00	0·65	0·80	2·75	4·63
..	..	..		1	1·2	0·40	0·69	0·37	1·55	5·25
..	..	..		1	0·7	0·20	0·68	0·29	2·07	3·55
..	..	..		Nil	0·7	Nil	1·03	Nil	0·19	6·16
..	..	..		1	0·9	0·17	0·89	0·17	1·06	6·67
..	..	..		Nil	0·5	Nil	0·26	Nil	..	5·88
..	..	..		Nil	0·7	0·03	0·42	0·02	2·98	3·82
..	..	..		Nil	0·7	0·03	0·49	0·03	1·77	3·67
..	..	..		Nil	0·7	Nil	0·48	Nil	2·40	4·26
..	..	..		1	0·7	0·19	0·55	0·19	1·94	6·87
					0·7		0·45			4·10
..	..	..		Nil	0·6	Nil	0·58	Nil	2·39	4·49
..	..	..		Nil	(*n*)	Nil	(*n*)	Nil	2·00	(*n*)
..	..	..		Nil	(*n*)	Nil	(*n*)	Nil	1·85	(*n*)

(*n*) Not ascertained.

DAILY RAINFALL RECORDED IN BENGAL

Division and district.	Station.	1	2	3	4	5	6	7
Burdwan—*concld.*								
Bankura ..	Bankura (Obsy.)	..	0·01	0·13	..	..	..	0·40
	Vishnupur	1·01	0·20	0·03	..	..	..	0·02
	Maliara	..	..	..	..	..	..	..
	Khatra	..	..	0·05	..	..	..	0·10
	Indas	..	0·17	..	..	..	..	..
	Kotalpur*							
	Onda	..	..	..	..	..	..	..
	Gangajalghati	..	0·04	..	..	..	..	0·53
	Raipur	..	0·30	0·08	..	..	..	..
	Sonamukhi	..	..	0·10	..	..	..	..
	Taldangra	..	..	..	..	..	..	..
	Saranga	..	..	..	..	..	..	..
	Indpur	..	..	..	..	..	..	..
	Arhara*							
	Barjora	..	..	0·13	..	..	..	0·97
	Simlapal	0·25	0·03	..	..	..	..	..
	Mejia	..	..	..	..	..	1·03	..
	Siromanipur	0·16	0·02	0·04	..	..	..	..
	Palasdanga	..	..	0·10	..	..	..	0·60
	Chatna	..	..	..	..	..	..	0·55
	Ranibandh	..	..	0·02	..	..	..	..
	Saltora*							
	Joypur*							
	Ambikanagar*							
	Joyrampur*							
Midnapore ..	Contai	..	..	0·29	0·04	..	..	..
	Tamluk	..	1·16	0·66	..	..	..	..
	Midnapore (Obsy.) ..	..	..	0·40	0·15	..	..	..
	Ghatal	..	..	0·80	0·07	..	..	..
	Kukrahati	..	0·35	..	..	..	..	..
	Amlagura	..	0·40	0·04	0·03	..	..	0·30
	Panskura	..	..	0·90	0·20	..	..	..
	Dantan	..	..	0·84	0·20	..	..	..
	Chandrakona	..	..	..	..	..	..	..
	Pachet*							
	Bhagwanpur	..	..	0·83	..	..	..	..
	Kashiary	..	1·60	0·70	..	..	0·91	..
	Nayabasan	0·11	0·07	0·05	..	..	..	..
	Silda (Belpabari)	0·30	0·03	..	..	..	..	..
	Goaltore	..	0·15	0·09	0·07	..	..	..
	Salboni	..	..	..	..	..	..	..
	Narayangarh*							
	Ramnagar	0·01	0·52	0·03	..	..	..	..
	Mohanpur	..	..	0·25	..	..	..	..
	Jenka (Khajri)	..	0·02	0·18	0·12	..	..	..
	Nandigram	..	..	..	..	..	..	..
	Moyna	..	0·58	0·70	..	..	..	..
	Pingla*							
	Narajole	..	..	..	..	..	..	..
	Kolaghat (Dainan) ..	..	..	0·29	0·58	..	..	..
	Balichak	..	..	0·71	0·50	..	..	..
	Jhargram	0·03	0·09	..	..	..	..	..
	Kharagpur	..	0·70	0·12	..	..	..	..
Hooghly ..	Serampore	..	0·42	0·48	0·02	..	..	..
	Hooghly	..	..	0·50	0·90	..	..	..
	Arambagh	..	0·04	0·20	0·03	..	..	..
	Chanditala*							
	Tentulia	0·50	0·70	..	..	..	..	..
	Boinchee*							
	Khanakul	..	0·68	0·48	..	..	..	..
	Tarakeswar	..	1·10	0·05	..	..	..	..
Howrah ..	Howrah	..	..	0·83	0·30	..	..	0·07
	Uluberia	..	..	0·80	0·60	0·06	..	..
	Amta	..	0·20	0·50	0·25	..	..	..
Rajshahi.								
Rajshahi ..	Boalia (Obsy.)	..	..	..	..	..	..	0·04
	Nator	0·10	..	..	..	..	..	..
	Naogaon	..	..	..	..	..	..	..
	Lalpur	..	..	..	..	..	..	..
	Manda	..	..	..	..	..	..	..
	Mahadebpur	..	..	0·10	..	..	..	..
	Tanor	..	..	..	..	..	..	..
	Chaugram	..	..	..	..	..	..	..
	Joari	..	..	..	..	..	..	..
	Badalgachi	..	0·15	..	..	..	..	..

*Not reported.

FOR THE MONTH OF NOVEMBER 1934.

8	9	10	11	12	13	14	15	16	17	18	19	20
..	..	..	..	..	..	..	..	..	..	..	..	..
..	..	..	..	..	..	..	..	..	..	..	..	..
..	..	..	..	..	..	..	..	..	..	..	..	..
..	..	..	..	..	..	..	..	..	..	..	..	..
..	..	..	..	..	..	..	..	..	..	..	..	..
..	..	..	..	..	..	..	..	..	..	..	..	..
..	..	..	..	..	..	..	..	..	..	..	..	..
..	..	..	..	..	..	..	..	..	..	..	..	..
..	..	..	..	..	..	..	..	..	..	..	..	..
..	..	..	..	..	..	..	..	..	..	..	..	..
..	..	..	..	..	..	..	..	..	..	..	..	..
..	..	..	..	..	..	..	..	..	..	..	..	..
..	..	..	..	..	..	..	..	..	..	..	..	..
..	..	..	..	..	..	..	..	..	..	..	..	..
..	..	..	..	..	..	..	..	..	..	..	..	..
..	..	..	..	..	..	..	..	..	..	..	..	..
..	..	..	..	..	..	..	..	..	..	..	..	..
..	..	..	..	..	..	..	..	..	..	..	..	..
..	..	..	..	..	..	..	..	..	..	..	..	..
..	..	..	..	..	..	..	..	..	..	..	..	..
..	..	..	..	..	..	..	..	..	..	..	..	..
..	..	..	..	..	..	..	..	..	..	..	..	..
..	..	..	..	..	..	..	..	..	..	..	..	..
..	..	..	..	..	..	..	..	..	..	..	..	..
..	..	..	..	..	..	..	..	..	..	..	..	..
..	..	..	..	..	..	..	..	..	..	..	..	..
..	..	..	..	..	..	..	..	..	..	..	..	..
..	..	..	..	..	..	..	..	..	..	..	..	..
..	..	..	..	..	..	..	..	..	..	..	..	..
..	..	..	..	..	..	..	..	..	..	..	..	..
..	..	..	..	..	..	..	..	..	..	..	..	..
..	..	..	..	..	..	..	..	..	..	..	..	..
..	..	..	..	..	..	..	..	..	..	..	..	..
..	..	..	..	..	..	..	..	..	..	..	..	..
..	..	..	..	..	..	..	..	..	..	..	..	..
..	..	..	..	..	..	..	..	..	..	..	..	..
..	..	..	..	..	..	..	..	..	..	..	..	..
..	..	..	..	..	..	..	..	..	..	..	..	..
..	..	..	..	..	..	..	..	..	..	..	..	..
..	..	..	..	..	..	..	..	..	..	..	..	..
..	..	..	..	..	..	..	..	..	..	..	..	..
..	..	..	..	..	..	..	..	..	..	..	..	..
..	..	..	..	..	..	..	..	..	..	..	..	..
..	..	..	..	..	..	..	..	..	..	..	..	..
..	..	..	..	..	..	..	..	..	..	..	..	..
..	..	..	..	..	..	..	..	..	..	..	..	..
..	..	..	..	..	..	..	..	..	..	..	..	..
..	..	..	..	..	..	..	..	..	..	..	..	..
..	..	..	..	..	..	..	..	..	..	..	..	..
..	..	..	..	..	..	..	..	..	..	..	..	..
..	..	..	..	..	..	..	..	..	..	..	..	..
..	..	..	..	..	..	..	..	..	..	..	..	..
..	..	..	..	..	..	..	..	..	..	..	..	..
..	..	..	..	..	..	..	..	..	..	..	..	..
..	..	..	..	..	..	..	..	..	..	..	..	..
..	..	..	..	..	..	..	..	..	..	..	..	..
..	..	..	..	..	..	..	..	..	..	..	..	..
..	..	..	..	..	..	..	..	..	..	..	..	..
..	..	..	..	..	..	..	..	..	..	..	..	..
..	..	..	..	..	..	..	..	..	..	..	..	..
..	..	..	..	..	..	..	..	..	..	..	..	..
..	..	..	..	..	..	..	..	..	..	..	..	..
..	..	..	..	..	..	..	..	..	..	..	..	..

DAILY RAINFALL RECORDED IN BENGAL

Division and district.	Station.	21	22	23	24	25	26	27
Burdwan—*concld.*								
Bankura ..	Bankura (Obsy.)	..	..	..	..	..	..	..
	Vishnupur	..	..	..	..	..	..	..
	Maliara	..	..	..	..	..	..	..
	Khatra	..	..	..	..	..	..	..
	Indas	..	..	..	..	..	..	..
	Kotalpur*							
	Onda	..	..	..	..	..	..	..
	Gangajalghati	..	..	..	..	..	..	..
	Raipur	..	..	..	..	..	..	..
	Sonamukhi	..	..	..	..	..	..	..
	Taldangra	..	..	..	..	..	..	..
	Saranga	..	..	..	..	..	..	..
	Indpur	..	..	..	..	..	..	..
	Arhara*							
	Barjora	..	..	..	..	..	..	..
	Simlapal	..	..	..	..	..	..	..
	Mejia	..	..	..	..	..	..	..
	Siromanipur	..	..	..	..	..	..	..
	Palasdanga	..	..	..	..	..	..	..
	Chatna	..	..	..	..	..	..	..
	Ranibandh	..	..	..	..	..	..	..
	Saltora *							
	Joypur*							
	Ambikanagar*							
	Joyrampur*							
Midnapore ..	Contai	..	..	..	..	..	..	..
	Tamluk	..	..	..	..	..	..	..
	Midnapore (Obsy.) ..	..	..	..	..	..	..	..
	Ghatal	..	..	..	..	..	..	..
	Kukrahati	..	..	..	..	..	..	..
	Amlagura	..	..	..	..	..	..	..
	Panskura	..	..	..	..	..	..	..
	Dantan	..	..	..	..	..	..	..
	Chandrakona	..	..	..	..	..	..	..
	Pachet*							
	Bhagwanpur	..	..	..	..	..	..	..
	Kashiary	..	..	..	..	..	..	..
	Nayabasan	..	..	..	..	..	..	..
	Silda (Belpabari) ..	..	..	..	..	..	..	..
	Goaltore	..	..	..	..	..	..	..
	Salboni	..	..	..	..	..	..	..
	Narayangarh*							
	Ramnagar	..	..	..	..	..	..	..
	Mohanpur	..	..	..	..	..	..	..
	Jenka (Khajri)	..	..	..	..	..	..	..
	Nandigram	..	..	..	..	..	..	..
	Moyna	..	..	..	..	..	..	..
	Pingla*							
	Narajole	..	..	..	..	..	..	..
	Kolaghat (Dainan) ..	..	..	..	..	..	..	..
	Balichak	..	..	..	..	..	..	..
	Jhargram	..	..	..	..	..	..	..
	Kharagpur	..	..	..	..	..	..	..
Hooghly ..	Serampore	..	..	..	..	..	..	..
	Hooghly	..	..	..	..	..	..	..
	Arambagh	..	..	..	..	..	..	..
	Chanditala*							
	Tentulia	..	..	..	..	..	..	..
	Boinchee*							
	Khanakul	..	..	..	..	..	..	..
	Tarakeswar	..	..	..	..	..	..	..
Howrah ..	Howrah	..	..	..	..	..	..	..
	Uluberia	..	..	..	..	..	..	..
	Amta	..	..	..	..	..	..	..
Rajshahi.								
Rajshahi ..	Boalia (Obsy.)	..	..	..	..	..	..	..
	Nator	..	..	..	..	..	..	..
	Naogaon	..	..	..	..	..	..	..
	Lalpur	..	..	..	..	..	..	..
	Manda	..	..	..	..	..	..	..
	Mahadebpur	..	..	..	..	..	..	..
	Tanor	..	..	..	..	..	..	..
	Chaugram	..	..	..	..	..	..	..
	Joari	..	..	..	..	..	..	..
	Badalgachi	..	..	..	..	..	..	..

*Not reported.

FOR THE MONTH OF NOVEMBER 1934.

28	29	30	31	Number of rainy days.	Average number of rainy days.	Total rainfall for the month.	Normal rainfall for the month.	Heaviest rainfall during the month.	Total rainfall from 1st October to 30th November 1934.	Normal rainfall from 1st October to 30th November 1934.
..	..	..		2	1·1	0·54	0·64	0·40	3·48	3·55
..	..	..		1	0·8	0·26	0·61	0·20	3·50	3·66
..	..	..		Nil	0·8	Nil	0·44	Nil	1·86	3·43
..	..	..		1	1·0	0·15	0·70	0·10	3·33	4·00
..	..	..		1	0·9	0·17	0·62	0·17	2·69	3·41
					0·7		0·75			4·56
..	..	..		Nil	0·8	Nil	0·45	Nil	2·82	3·28
..	..	..		1	0·8	0·57	0·60	0·53	2·56	3·35
..	..	..		1	1·0	0·38	0·67	0·30	3·70	4·28
..	..	..		1	0·8	0·10	0·71	0·10	..	3·78
..	..	..		Nil	1·2	Nil	0·82	Nil	1·27	6·05
..	..	..		Nil	1·3	Nil	0·91	Nil	2·04	5·14
..	..	..		Nil	1·5	Nil	0·69	Nil	0·50	5·70
					(*n*)		(*n*)			(*n*)
..	..	..		2	(*n*)	1·10	(*n*)	0·97	2·00	(*n*)
..	..	..		1	(*n*)	0·28	(*n*)	0·25	3·05	(*n*)
..	..	..		1	(*n*)	1·03	(*n*)	1·03	3·00	(*n*)
..	..	..		1	(*n*)	0·22	(*n*)	0·16	4·51	(*n*)
..	..	..		2	(*n*)	0·70	(*n*)	0·60	..	(*n*)
..	..	..		1	(*n*)	0·55	(*n*)	0·55	2·72	(*n*)
..	..	..		Nil	(*n*)	0·02	(*n*)	0·02	2·71	(*n*)
					(*n*)		(*n*)			(*n*)
					(*n*)		(*n*)			(*n*)
					(*n*)		(*n*)			(*n*)
					(*n*)		(*n*)			(*n*)
..	..	..		1	1·2	0·33	1·27	0·29	6·31	8·28
..	..	..		2	1·0	1·82	0·66	1·16	6·80	5·01
..	..	..		2	1·1	0·55	0·88	0·40	2·68	4·52
..	..	..		1	0·8	0·87	0·71	0·80	4·25	4·15
..	..	..		1	1·1	0·35	0·90	0·35	7·48	5·94
..	..	..		2	0·8	0·77	0·87	0·40	3·15	4·23
..	..	..		2	1·0	1·10	1·06	0·90	6·45	4·71
..	..	..		2	1·0	1·04	1·04	0·84	6·29	5·95
..	..	..		Nil	0·6	Nil	0·80	Nil	..	4·63
					0·8		0·80			6·11
..	..	..		1	0·9	0·83	0·88	0·83	4·50	5·67
..	..	..		3	1·3	3·21	1·10	1·60	7·60	6·96
..	..	..		1	1·6	0·23	2·17	0·11	4·08	5·78
..	..	..		1	1·1	0·33	0·67	0·30	3·07	4·55
..	..	..		1	0·8	0·31	0·60	0·15	1·97	5·63
..	..	..		Nil	1·0	Nil	1·25	Nil	1·18	5·41
					1·4		1·70			7·16
..	..	..		1	1·2	1·56	1·78	0·52	5·30	10·44
..	..	..		1	0·9	0·25	1·08	0·25	7·74	8·95
..	..	..		2	1·3	0·32	1·55	0·18	4·00	8·82
..	..	..		Nil	0·9	Nil	1·05	Nil	5·45	7·97
..	..	..		2	1·0	1·28	1·21	0·70	4·49	6·42
					0·8		0·69			5·90
..	..	..		Nil	0·7	Nil	0·98	Nil	..	7·37
..	..	..		2	(*n*)	0·87	(*n*)	0·58	4·55	(*n*)
..	..	..		2	(*n*)	1·21	(*n*)	0·71	5·37	(*n*)
..	..	..		Nil	(*n*)	0·12	(*n*)	0·09	3·21	(*n*)
..	..	..		2	(*n*)	0·82	(*n*)	0·70	2·77	(*n*)
..	..	..		2	0·9	0·92	0·61	0·48	5·35	4·70
..	..	..		2	0·9	1·40	0·66	0·90	6·86	4·53
..	..	..		1	0·8	0·27	0·56	0·20	2·99	4·43
					(*n*)		(*n*)			(*n*)
..	..	..		2	(*n*)	1·20	(*n*)	0·70	5·80	(*n*)
					(*n*)		(*n*)			(*n*)
..	..	..		2	(*n*)	1·16	(*n*)	0·68	4·00	(*n*)
..	..	..		1	(*n*)	1·15	(*n*)	1·10	6·60	(*n*)
..	..	..		2	0·9	1·20	0·52	0·83	6·44	4·79
..	..	..		2	1·1	1·46	0·68	0·80	10·05	4·49
..	..	..		3	1·1	0·95	0·75	0·50	7·50	5·14
..	..	..		Nil	0·7	0·04	0·49	0·04	4·47	4·22
..	..	..		1	0·7	0·10	0·52	0·10	6·26	4·73
..	..	..		Nil	0·6	Nil	0·58	Nil	8·15	4·95
..	..	..		Nil	0·7	Nil	0·70	Nil	6·65	4·57
..	..	..		Nil	0·6	Nil	0·44	Nil	3·75	4·45
..	..	..		1	0·7	0·10	0·44	0·10	2·31	4·87
..	..	..		Nil	0·4	Nil	0·36	Nil	2·97	5·40
..	..	..		Nil	(*n*)	Nil	(*n*)	Nil	..	(*n*)
..	..	..		Nil	(*n*)	Nil	(*n*)	Nil	10·47	(*n*)
..	..	..		1	(*n*)	0·15	(*n*)	0·15	5·62	(*n*)

(*n*) Not ascertained.

DAILY RAINFALL RECORDED IN BENGAL

Division and district.	Station.	1	2	3	4	5	6	7
Rajshahi—*concld.*								
Dinajpur ..	Nithpur	..	..	..	..	..	..	..
	Nawabganj	..	..	..	..	..	0·50	..
	Gangarampur	..	..	..	..	..	..	..
	Itahar	..	..	..	..	..	0·56	..
	Raiganj	..	..	..	..	..	..	..
	Dinajpur (Obsy.)	..	..	..	..	..	..	1·82
	Balurghat	..	..	..	..	..	..	..
	Thakurgaon	..	..	..	..	..	..	..
	Setabganj	..	..	..	..	..	..	..
	Ramganj*							
	Atwari*							
	Birganj	..	..	..	..	..	0·71	..
	Parbatipur	..	..	..	..	..	..	..
	Patnitola	..	..	..	..	..	..	..
	Sapahar*							
Jalpaiguri ..	Jalpaiguri (Obsy.)	..	..	..	..	..	0·01	0·03
	Alipur Duars	..	..	..	..	..	..	0·03
	Falakata	..	..	..	..	..	..	..
	Debiganj	..	..	..	..	..	..	0·05
	Buxa	..	..	..	..	..	..	..
	Kalchini	..	..	..	..	..	..	0·01
	Kumargram	..	..	..	..	..		..
Darjeeling ..	Siliguri	..	..	..	..	..	..	..
	Darjeeling (Obsy.) ..	..	..	..	..	..	..	0·45
	Kalimpong (Obsy.) ..	..	..	0·11	..	..	..	0·14
	Mongpoo	..	..	..	..	..	..	0·07
	Kurseong	..	..	..	..	..	..	..
	Pedong	..	..	..	..	..	..	0·17
Rangpur ..	Bhawaniganj (Gaibandha) ..	..	..	..	..	..	..	2·00
	Rangpur (Obsy.)	..	..	..	..	..	..	0·34
	Pirganj	..	..	..	..	..	..	..
	Kurigaon	..	..	..	..	..	..	0·02
	Gobindganj	..	..	..	..	..	..	..
	Bagdogra (Nilphamari) ..	..	..	..	..	..	..	..
	Ulipur	..	..	0·11	0·04	..	..	0·06
	Sunderganj	..	..	..	..	..	..	..
	Saidpur	..	..	..	..	..	0·35	..
Bogra ..	Sherpur	..	..	..	..	..	..	..
	Nowkhilla	..	..	..	..	..	..	..
	Bogra (Obsy.)	..	..	0·04	..	..	..	..
	Panchbibi	..	..	..	..	..	..	..
	Khetlal	..	..	..	..	..	..	..
	Adamdighi	..	..	..	..	..	..	..
	Dubchanchia	..	..	..	..	..	..	..
Pabna ..	Shazadpur	..	..	..	..	..	0·32	..
	Pabna	..	0·03	0·10	0·02	..	0·17	1·11
	Sirajganj (Obsy.) ..	..	..	0·05	..	..	..	0·08
	Iswardi	..	..	0·08	..	..	..	..
Malda ..	Malda (Obsy.)	..	..	0·01	..	..	..	..
	Chanchal	..	..	..	..	..	..	..
	Gazol	..	..	..	..	..	..	..
	Sibganj	..	..	..	..	..	..	..
	Gomastapur	..	..	..	..	..	..	..
	Nawabganj	..	..	..	..	..	..	..
Dacca.								
Dacca ..	Munshiganj	..	..	0·82	0·95	0·27	..	0·53
	Dacca	..	..	0·90	0·45	0·03	..	0·20
	Nawabganj	..	0·28	0·88	0·71	0·15	..	0·65
	Narayanganj (Obsy.) ..	..	..	0·65	0·38	0·10	..	0·44
	Narsingdi	..	0·01	0·77	0·53	0·01	..	0·10
	Manickganj	..	0·20	0·28	0·50	0·05	..	..
	Joydebpur	0·15	0·40	0·40	0·02	..	0·12	..
	Kapasia	..	0·24	0·45	0·85	0·05	..	1·15

*Not reported.

FOR THE MONTH OF NOVEMBER 1934.

8	9	10	11	12	13	14	15	16	17	18	19	20
..	..	..	..	..	..	..	..	..	..	..	..	..
..	..	..	..	..	..	..	..	..	..	..	..	..
..	..	..	..	..	..	..	..	..	..	..	..	..
..	..	..	..	..	..	..	..	..	..	..	..	..
..	..	..	..	..	..	..	..	..	..	..	..	..
..	..	..	..	..	..	..	..	..	..	..	..	..
..	..	..	..	..	..	..	..	..	..	..	..	..
..	..	..	..	..	..	..	..	..	..	..	..	..
..	..	..	..	..	..	..	..	..	..	..	..	..
..	..	..	..	..	..	..	..	..	..	..	..	..
..	..	..	..	..	..	..	..	..	..	..	..	..
..	..	..	..	..	..	..	..	..	..	..	..	..
..	..	..	..	..	..	..	..	..	..	..	..	..
..	..	..	..	..	..	..	..	..	..	..	..	..
..	..	..	..	..	..	..	..	..	..	..	..	..
..	..	..	..	..	..	..	..	..	..	..	..	..
..	..	..	0·03	..	0·12	0·08	0·21	0·04	0·05	..	..	0·01
..	..	..	..	..	..	..	..	0·12	0·03	..	..	..
..	..	..	..	..	..	..	..	..	..	..	..	..
..	..	..	..	..	0·09	..	0·04	..	..	..	..	..
..	..	..	..	..	..	..	..	..	..	0·08	..	..
..	..	..	..	0·01	..	0·01	..	..	..	..	..	..
0·01	..	..	..	..	..	..	..	..	..	..	..	..
0·40	..	..	..	..	..	0·03	..	..	..	..	..	..
0·01	..	..	..	0·04	0·01	0·01	0·01	0·01	..	..	..	..
..	..	..	..	..	..	..	..	..	..	..	..	..
..	..	..	..	..	..	..	..	..	..	..	..	..
..	..	..	..	..	..	..	..	..	..	..	..	..
..	..	..	..	..	..	..	..	..	..	..	..	..
..	..	..	..	..	..	..	..	..	..	..	..	..
..	..	..	..	..	..	..	..	..	..	..	..	..
..	..	..	..	..	..	..	..	..	..	..	..	..
0·36	..	..	..	..	..	..	..	..	..	..	..	..
..	..	..	..	..	..	..	..	..	..	..	..	..
..	..	..	..	..	..	..	..	..	..	..	..	..
..	..	..	..	..	..	..	..	..	..	..	..	..
..	..	..	..	..	..	..	..	..	..	..	..	..
..	..	..	..	..	..	..	..	..	..	..	..	..
..	..	..	..	..	..	..	..	..	..	..	..	..
..	..	..	..	..	..	..	..	..	..	..	..	..
..	..	..	..	..	..	..	..	..	..	..	..	..
..	..	..	..	..	..	..	..	..	..	..	..	..
..	..	..	..	..	..	..	..	..	..	..	..	..
..	..	..	..	..	..	..	..	..	..	..	..	..
..	..	..	..	..	..	..	..	..	..	..	..	..
..	..	..	..	..	..	..	..	..	..	..	..	..
..	..	..	..	..	..	..	..	..	..	..	..	..
..	..	..	..	..	..	..	..	..	..	..	..	..
..	..	..	..	..	..	..	..	..	..	..	..	..
..	..	..	..	..	..	..	..	..	..	..	..	..
..	..	..	..	..	..	..	..	..	..	..	..	..
0·18	..	..	..	..	..	..	..	..	..	..	..	..
..	..	..	..	..	..	..	..	..	..	..	..	..
..	..	..	..	..	..	..	..	..	..	..	..	..
..	..	0·03	..	..	..	..	..	..	..	..	..	..
..	..	..	..	..	..	..	..	..	..	..	..	..
..	..	..	..	..	..	..	..	..	..	..	..	..
..	..	..	..	..	..	..	..	..	..	..	..	..
..	..	..	..	..	..	..	..	..	..	..	..	..

DAILY RAINFALL RECORDED IN BENGAL

Division and district.	Station.	21	22	23	24	25	26	27
Rajshahi—*concld.*								
Dinajpur ..	Nithpur	..	..	..	..	..	..	..
	Nawabganj	..	..	..	..	..	..	..
	Gangarampur	..	..	..	..	..	..	..
	Itahar	..	..	..	..	..	..	..
	Raiganj	..	..	..	..	..	..	..
	Dinajpur (Obsy.)	..	..	..	..	..	..	..
	Balurghat	..	..	..	..	..	..	..
	Thakurgaon	..	..	..	..	..	..	..
	Setabganj	..	..	..	..	..	..	..
	Ramganj*							
	Atwari*							
	Birganj	..	..	..	..	..	..	..
	Parbatipur	..	..	..	..	..	..	..
	Patnitola	..	..	..	..	..	..	..
	Sapahar*							
Jalpaiguri ..	Jalpaiguri (Obsy.)	..	..	..	..	..	..	..
	Alipur Duars	..	..	..	..	..	..	..
	Falakata	..	..	..	..	..	..	..
	Debiganj	..	..	..	..	..	..	..
	Buxa	0·02	..	..	0·32	..	0·12	..
	Kalchini	..	..	..	..	0·02	..	..
	Kumargram	..	..	..	..	..	..	..
Darjeeling ..	Siliguri	..	..	..	..	..	..	..
	Darjeeling (Obsy.)	..	..	0·12	..	0·08	..	..
	Kalimpong (Obsy.)	..	..	..	..	..	..	..
	Mongpoo	..	..	0·03	..	0·02	..	..
	Kurseong	..	..	0·06	0·21	..	..	..
	Pedong	..	..	0·01	0·01	..	0·03	..
Rangpur ..	Bhawaniganj (Gaibandha) ..	..	..	..	..	..	..	..
	Rangpur (Obsy.)	..	..	..	..	..	..	..
	Pirganj	..	..	..	..	..	..	..
	Kurigaon	..	..	..	..	..	..	..
	Gobindganj	..	..	..	..	..	..	..
	Bagdogra (Nilphamari) ..	..	..	..	..	..	..	..
	Ulipur	..	..	..	..	..	..	..
	Sunderganj	..	..	..	..	..	..	..
	Saidpur	..	..	..	..	..	..	..
Bogra ..	Sherpur	..	..	..	..	..	..	..
	Nowkhilla	..	..	..	..	..	..	..
	Bogra (Obsy.)	..	..	..	..	..	..	..
	Panchbibi	..	..	..	..	..	..	..
	Khetlal	..	..	..	..	..	..	..
	Adamdighi	..	..	..	..	..	..	..
	Dubchanchia	..	..	..	..	..	..	..
Pabna ..	Shazadpur	..	..	..	..	..	..	..
	Pabna	..	..	..	..	..	..	..
	Sirajganj (Obsy.)	..	..	..	..	..	..	..
	Iswardi	..	..	..	..	..	..	..
Malda ..	Malda (Obsy.)	..	..	..	..	..	..	..
	Chanchal	..	..	..	..	..	..	..
	Gazol	..	..	..	..	..	..	..
	Sibganj	..	..	..	..	..	..	..
	Gomastapur	..	..	..	..	..	..	..
	Nawabganj	..	..	..	..	..	..	..
Dacca.								
Dacca ..	Munshiganj	..	..	..	..	..	..	..
	Dacca	..	..	..	..	..	..	..
	Nawabganj	..	..	..	..	..	..	..
	Narayanganj (Obsy.)	..	..	..	..	..	..	..
	Narsingdi	..	..	..	..	..	..	..
	Manickganj	..	..	..	..	..	..	..
	Joydebpur	..	..	..	..	..	..	..
	Kapasia	..	..	..	..	..	..	..

* Not reported.

FOR THE MONTH OF NOVEMBER 1934.

28	29	30	31	Number of rainy days.	Average number of rainy days.	Total rainfall for the month.	Normal rainfall for the month.	Heaviest rainfall during the month.	Total rainfall from 1st October to 30th November 1934.	Normal rainfall from 1st October to 30th November 1934.
..	..	..		Nil	0·3	Nil	0·32	Nil	2·42	4·92
..	..	..		1	0·4	0·50	0·18	0·50	3·47	5·19
..	..	..		Nil	0·3	Nil	0·13	Nil	6·82	4·31
..	..	..		1	0·5	0·56	0·26	0·56	..	3·48
..	..	..		Nil	0·4	Nil	0·19	Nil	5·51	3·59
..	..	..		1	0·4	1·82	0·22	1·82	8·68	4·47
..	..	..		Nil	0·5	Nil	0·32	Nil	4·05	4·47
..	..	..		Nil	0·2	Nil	0·19	Nil	4·32	4·28
..	..	..		Nil	0·4	Nil	0·16	Nil	3·39	3·88
					0·3		0·25			3·99
					0·00		0·00			3·48
..	..	..		1	0·4	0·71	0·30	0·71	5·01	5·15
..	..	..		Nil	0·5	Nil	0·33	Nil	3·85	5·38
..	..	..		Nil	(*n*)	Nil	(*n*)	Nil	2·59	(*n*)
					(*n*)		(*n*)			(*n*)
..	..	..		Nil	0·4	0·04	0·20	0·03	3·68	5·10
..	..	..		Nil	0·5	0·03	0·26	0·03	4·89	5·41
..	..	..		Nil	0·5	Nil	0·30	Nil	..	4·59
..	..	..		Nil	0·3	0·05	0·17	0·05	4·57	4·00
..	..	..		4	2·0	1·00	0·90	0·32	9·20	10·87
..	..	..		1	1·5	0·18	0·64	0·12	5·56	6·83
..	..	..		Nil	1·3	Nil	0·56	Nil	..	9·71
..	..	..		Nil	0·8	0·13	0·43	0·09	6·20	6·51
..	0·13	..		3	1·1	0·86	0·78	0·45	13·00	5·32
..	..	..		2	1·0	0·27	0·62	0·14	8·37	5·77
..	..	..		Nil	0·7	0·13	0·65	0·07	11·05	4·59
..	..	..		2	1·1	0·70	0·49	0·40	12·31	6·18
..	..	..		1	1·4	0·31	0·73	0·17	9·38	4·44
..	..	..		1	0·4	2·00	0·30	2·00	7·04	6·03
..	..	..		1	0·3	0·34	0·21	0·34	3·52	5·57
..	..	..		Nil	0·5	Nil	0·46	Nil	5·94	6·26
..	..	..		Nil	0·2	0·02	0·24	0·02	7·89	5·53
..	..	..		Nil	0·6	Nil	0·43	Nil	4·52	5·96
..	..	..		Nil	0·2	Nil	0·14	Nil	1·99	4·30
..	..	..		1	0·3	0·21	0·33	0·11	8·17	7·00
..	..	..		1	0·5	0·36	0·33	0·36	5·59	6·68
..	..	..		1	0·2	0·35	0·23	0·35	8·07	4·99
..	..	..		Nil	0·7	Nil	0·60	Nil	7·14	5·04
..	..	..		Nil	0·6	Nil	0·52	Nil	7·80	5·65
..	..	..		Nil	0·7	0·04	0·74	0·04	6·61	5·70
..	..	..		Nil	0·6	Nil	0·31	Nil	4·52	5·24
..	..	..		Nil	0·4	Nil	0·28	Nil	3·63	4·48
..	..	..		Nil	(*n*)	Nil	(*n*)	Nil	4·15	(*n*)
..	..	..		Nil	(*n*)	Nil	(*n*)	Nil	6·05	(*n*)
..	..	..		1	0·6	0·32	0·24	0·32	6·88	5·41
..	..	..		3	0·9	1·43	0·57	1·11	5·36	4·99
..	..	..		Nil	0·7	0·13	0·62	0·08	9·04	5·56
..	..	..		Nil	1·9	0·08	0·55	0·08	8·23	5·42
..	..	..		Nil	0·7	0·01	0·35	0·01	3·06	4·69
..	..	..		Nil	0·4	Nil	0·26	Nil	7·22	3·06
..	..	..		Nil	0·4	Nil	0·32	Nil	2·32	3·85
..	..	..		Nil	0·6	Nil	0·50	Nil	3·05	4·07
..	..	..		Nil	0·7	Nil	0·54	Nil	3·34	5·33
..	..	..		Nil	0·6	Nil	0·56	Nil	1·79	4·57
..	..	..		5	1·3	2·75	1·03	0·95	11·13	6·59
..	..	..		3	1·2	1·58	0·84	0·90	8·43	5·44
..	..	..		5	0·6	2·67	0·39	0·88	9·36	5·20
..	..	..		4	1·1	1·60	0·98	0·65	10·82	6·05
..	..	..		3	0·9	1·42	0·83	0·77	8·43	6·33
..	..	..		3	1·0	1·03	0·89	0·50	10·38	5·05
..	..	..		4	1·1	1·09	0·98	0·40	7·40	5·72
..	..	..		4	0·7	2·74	0·31	1·15	10·03	4·96

(*n*) Not ascertained.

DAILY RAINFALL RECORDED IN BENGAL

Division and district.	Station.	1	2	3	4	5	6	7
Dacca—*concld.*								
Mymensingh ..	Kishoreganj	..	..	0·28	0·35	0·06	..	0·35
	Atia (Tangail)	..	0·09	..	..	..	1·30	..
	Sarisabari	..	..	..	..	..	..	..
	Mymensingh (Obsy.) ..	..	..	0·54	..	..	..	0·26
	Jamalpur	..	..	..	..	..	..	..
	Netrokona	..	..	0·10	..	0·04	..	0·10
	Pingna	..	..	..	..	..	..	..
	Durgapur*							
	Sherpur (Town)	..	..	..	..	..	0·15	..
	Dewanganj	..	..	..	..	..	..	..
	Nalitabari	..	..	..	..	..	..	0·09
Faridpur ..	Madaripur	..	..	0·45	1·05	0·20	..	3·89
	Faridpur (Obsy.) ..	..	..	0·75	1·37	0·04	..	..
	Rajbari (Goalundo) ..	..	0·01	0·08	0·06	..	0·08	0·04
	Haridaspur	..	0·01	0·47	1·07	0·02	..	1·22
	Takerhat	0·01	0·31	0·71	0·74	0·08	0·96	..
	Bhanga	..	0·95	0·35	..	..	0·75	..
	Pangsa	..	0·07	0·15	0·34	..	..	..
	Baliakandi	..	0·17	0·38	0·30	..	..	..
	Bhuana	..	0·35	1·06	0·54	0·19	0·28	0·17
	Palong	..	..	..	..	..	..	..
Bakarganj ..	Patuakhali	..	..	0·29	0·95	0·09	0·12	0·90
	Barguna	..	..	..	3·85	1·40	..	0·15
	Pirojpur	..	..	0·10	0·10	..	1·96	3·59
	Barisal (Obsy.) ..	..	..	0·22	0·02	0·17	0·35	0·58
	Gaurnadi	..	..	0·29	0·61	0·15	1·07	0·91
	Bhola	..	..	0·20	0·08	0·13	0·15	1·22
	Daulatkhan	..	..	0·28	0·23	0·18	0·12	0·10
	Bauphal	..	..	..	..	..	0·56	0·65
Chittagong.								
Chittagong ..	Cox's Bazar (Obsy.) ..	..	0·02	0·26	0·11	0·02	..	..
	Chittagong (Obsy.) ..	..	..	0·07	0·45	0·06	..	..
	Kutubdia	..	..	..	..	..	..	..
	Satkania	..	..	..	..	..	..	..
	Mirsarai	..	..	..	..	..	0·50	..
	Rangunia	0·01	..	0·01	0·01	0·03	0·05	0·40
Tippera ..	Comilla (Obsy.)	..	..	0·21	0·43	0·09	..	0·73
	Chandpur	..	..	0·02	0·07	0·24	0·25	0·41
	Brahmanbaria	0·15	..	0·80	0·52	..	..	..
	Ramchandrapur	..	0·05	0·40	0·15	0·05	..	0·55
	Nasirnagar*							
	Daudkandi*							
	Kasba	..	0·47	0·71	0·42	..	0·30	0·74
	Laksam	..	..	0·20	0·80	0·29	1·00	..
Noakhali ..	Noakhali (Obsy.)	..	..	0·15	0·05	0·10	..	1·40
	Feni	..	..	0·13	..	0·34	..	0·26
	Harishpur	..	..	..	..	..	0·03	0·02
	Ramganj	..	..	..	..	..	..	..
	Chhagalnaya	..	0·40	..	0·05	..	..	0·45
	Hatiya	..	..	..	..	..	..	..
	Lakhimpur	..	..	0·48	0·10	0·20	..	1·46
Chittagong Hill Tracts	Rangamati	..	..	0·10	0·07	..	..	..
	Bandarban	..	..	0·37	0·13	..	..	..
	Barkal	..	..	0·21	0·05	..	..	..
	Mahalchari	..	..	0·34	0·18	..	..	..
	Lama*							
	Ramgarh	..	..	..	..	..	..	1·21
	Manikseri	..	0·09	0·13	..	..	..	0·38
	Dighinala	..	..	..	..	0·05	0·09	0·14
	Mainmukh	..	..	0·35	0·41	..	..	0·04
	Kaptai	..	..	0·12	..	..	0·53	0·95
	Panchhari	..	..	0·13	..	0·53	..	..
	Nakhyongchhari	..	..	0·71	0·31	..	..	..
Tripura State ..	Agartala	..	0·53	0·40	0·04	..	0·28	..
Cooch Behar ..	Dinhata	..	..	..	..	..	..	..
	Cooch Behar (Obsy.) ..	..	..	..	..	..	..	0·56
	Mickliganj	..	..	..	..	..	..	..
	Mathabhanga	..	..	0·03	..	..	0·01	0·05
	Fulbaria (Tufanganj) ..	..	..	..	..	..	..	0·07

*Not reported.

FOR THE MONTH OF NOVEMBER 1934.

8	9	10	11	12	13	14	15	16	17	18	19	20
..	0·13	..	..	..	..	..	..	..	..	..	..	..
..	..	..	..	..	..	..	..	..	..	..	..	..
..	..	..	..	..	..	..	..	..	..	..	..	..
..	..	..	..	..	..	..	..	..	..	..	..	..
..	..	..	..	..	..	..	..	..	..	..	..	..
..	..	..	..	..	..	..	..	..	..	..	..	..
..	..	..	..	..	..	..	..	..	..	..	..	..
..	..	..	..	..	..	..	..	..	..	..	..	..
..	..	..	..	..	..	..	..	..	..	..	..	..
..	..	..	..	..	..	..	..	..	..	..	..	..
..	..	..	..	..	..	..	..	..	..	..	..	..
..	..	..	..	..	..	..	..	..	..	..	..	..
0·01	..	..	..	..	..	..	..	..	..	..	..	..
..	..	..	..	..	..	..	..	..	..	..	..	..
..	..	..	..	..	..	..	..	..	..	..	..	..
..	..	..	..	..	..	..	..	..	..	..	..	..
..	..	..	..	..	..	..	..	..	..	..	..	..
0·36	0·55	..	..	..	..	..	..	..	..	..	..	..
..	0·40	..	..	..	..	..	..	..	..	..	..	..
..	0·17	..	..	..	..	..	..	..	..	..	..	..
0·03	0·56	0·02	..	..	..	..	..	..	..	..	..	..
0·09	..	..	..	..	..	..	..	..	..	..	..	..
0·10	1·41	..	..	..	..	..	..	..	..	..	..	..
0·20	0·15	..	..	..	..	..	..	..	..	..	..	..
1·75	..	..	..	..	..	..	..	..	..	..	..	..
0·13	2·19	1·53	..	..	..	..	..	..	..	..	..	..
0·42	2·24	1·31	..	..	..	..	..	..	..	..	..	..
3·00	2·20	..	..	..	..	..	..	..	..	..	..	..
0·50	1·05	..	..	..	..	..	..	..	..	..	..	..
..	..	..	..	..	..	..	..	..	..	..	..	..
1·99	1·27	..	..	..	..	..	..	..	..	..	..	..
0·23	0·81	0·17	..	..	..	..	..	..	..	..	..	..
..	0·63	0·15	..	..	..	..	..	..	..	..	..	..
..	0·74	0·52	..	..	..	..	..	..	..	..	..	..
0·15	0·50	0·10	..	..	..	..	..	..	..	..	..	..
..	0·09	..	..	..	..	..	..	..	..	..	..	..
0·24	0·74	..	..	..	..	..	..	..	..	..	..	..
0·36	0·42	0·06	..	..	..	..	..	..	..	..	..	..
0·15	0·62	0·94	..	..	..	..	..	..	..	..	..	..
1·45	1·02	1·15	..	..	..	..	..	..	..	..	..	..
..	..	..	..	..	..	..	..	..	..	..	..	..
0·05	0·65	1·40	..	..	..	..	..	..	..	..	..	..
1·93	1·18	0·18	..	..	..	..	..	..	..	..	..	..
0·20	1·00	..	..	..	..	..	..	..	..	..	..	..
..	2·40	1·10	..	..	..	..	..	..	..	..	..	..
..	2·40	1·25	..	..	..	..	..	..	..	..	..	..
0·90	1·80	1·00	..	..	..	..	..	..	..	..	..	..
0·76	2·50	1·14	..	..	..	..	..	..	..	..	..	..
1·17	0·52	..	..	..	..	..	..	..	..	..	..	..
1·73	0·91	..	..	..	..	..	..	..	..	..	..	..
0·26	0·85	1·30	..	..	..	..	..	..	..	..	..	..
0·35	1·85	0·87	0·02	..	..	..	..	..	..	..	..	..
2·20	1·00	..	..	..	..	..	..	..	..	..	..	..
0·10	0·74	0·91	..	..	..	..	..	..	..	..	..	..
0·38	1·70	1·71	..	..	..	..	..	..	..	..	..	..
0·80	..	..	..	..	..	..	..	..	..	..	..	..
..	..	..	..	..	..	..	..	..	..	..	..	..
..	..	..	..	..	..	..	..	..	..	..	..	..
..	..	..	..	..	..	..	..	..	..	..	..	..
..	..	..	..	..	..	..	..	..	..	..	..	..
..	..	..	..	..	..	..	..	..	..	..	..	..

DAILY RAINFALL RECORDED IN BENGAL

Division and district.	Station.	21	22	23	24	25	26	27
Dacca—*concld.*								
Mymensingh ..	Kishoreganj	..	..	..	..	..	..	..
	Atia (Tangail)	..	..	..	..	..	..	..
	Sarisabari	..	..	..	..	..	..	..
	Mymensingh (Obsy.) ..	..	..	..	..	..	..	..
	Jamalpur	..	..	..	..	..	..	..
	Netrokona	..	..	..	..	..	..	..
	Pingna	..	..	..	..	..	..	..
	Durgapur*							
	Sherpur (Town)	..	..	..	..	..	..	..
	Dewanganj	..	..	..	..	..	..	..
	Nalitabari	..	..	..	..	..	..	..
Faridpur ..	Madaripur	..	..	..	..	..	..	..
	Faridpur (Obsy.) ..	..	..	..	..	..	..	..
	Rajbari (Goalundo) ..	..	..	..	..	..	..	..
	Haridaspur	..	..	..	..	..	..	..
	Takerhat	..	..	..	..	..	..	..
	Bhanga	..	..	..	..	..	..	..
	Pangsa	..	..	..	..	..	..	..
	Baliakandi	..	..	..	..	..	..	..
	Bhusna	..	..	..	..	..	..	..
	Palong	..	..	..	..	..	..	..
Bakarganj ..	Patuakhali	..	..	..	..	..	..	..
	Barguna	..	..	..	..	..	..	..
	Pirojpur	..	..	..	..	..	..	..
	Barisal (Obsy.) ..	..	..	..	..	..	..	..
	Gaurnadi	..	..	..	..	..	..	..
	Bhola	..	..	..	..	..	..	..
	Daulatkhan	..	..	..	..	..	..	..
	Bauphal	..	..	..	..	..	..	..
Chittagong.								
Chittagong ..	Cox's Bazar (Obsy.) ..	..	..	..	..	..	..	..
	Chittagong (Obsy.) ..	..	..	..	..	..	..	..
	Kutubdia	..	..	..	..	..	..	..
	Satkania	..	..	..	..	..	..	..
	Mirsarai	..	..	..	..	..	..	..
	Rangunia	..	..	..	..	..	..	..
Tippera ..	Comilla (Obsy.)	..	..	..	..	..	..	..
	Chandpur	..	..	..	..	..	..	..
	Brahmanbaria	..	..	..	..	..	..	..
	Ramchandrapur	..	..	..	..	..	..	..
	Nasirnagar*							
	Daudkandi*							
	Kasba	..	..	..	..	..	..	..
	Laksam	..	..	..	..	..	..	..
Noakhali ..	Noakhali (Obsy.)	..	..	..	..	..	..	..
	Feni	..	..	..	..	..	..	..
	Harishpur	..	..	..	..	..	..	..
	Ramganj	..	..	..	..	..	..	..
	Chhagalnaya	..	..	..	..	..	..	..
	Hatiya	..	..	..	..	..	..	..
	Lakhimpur	..	..	..	..	..	..	..
Chittagong Hill Tracts	Rangamati	..	..	..	..	..	..	..
	Bandarban	..	..	..	..	..	..	..
	Barkal	..	..	..	..	..	..	..
	Mahalchari	..	..	..	..	..	..	..
	Lama*							
	Ramgarh	..	..	..	..	..	..	..
	Manikseri	..	..	..	..	..	..	..
	Dighinala	..	..	..	..	..	..	..
	Mainmukh	..	..	..	..	..	..	..
	Kaptai	..	..	..	..	..	..	..
	Panchhari	..	..	..	..	..	..	..
	Nakhyongchhari	..	..	..	..	..	..	..
Tripura State ..	Agartala	..	..	..	..	..	..	..
Cooch Behar ..	Dinhata	..	..	..	..	..	..	..
	Cooch Behar (Obsy.) ..	..	..	..	..	..	..	..
	Mikliganj	..	..	..	..	..	..	..
	Mathabhanga	..	..	..	..	..	..	..
	Fulbaria (Tufanganj) ..	..	..	..	..	..	..	..

*Not reported.

Dacca, the 19th December 1934.

FOR THE MONTH OF NOVEMBER 1934.

28	29	30		Number of rainy days.	Average number of rainy days.	Total rainfall for the month.	Normal rainfall for the month.	Heaviest rainfall during the month.	Total rainfall from 1st October to 30th November 1934.	Normal rainfall from 1st October to 30th November 1934.
..	..	..		4	1·0	1·17	0·79	0·35	18·13	6·67
..	..	..		1	0·8	1·39	0·51	1·30	3·75	4·86
..	..	..		Nil	0·6	Nil	0·48	Nil	..	5·81
..	..	..		2	0·9	0·80	0·88	0·54	21·17	6·68
..	..	..		Nil	0·6	Nil	0·46	Nil	6·92	5·68
..	..	..		2	0·8	0·24	0·76	0·10	28·65	7·81
..	..	..		Nil	0·2	Nil	0·18	Nil	7·90	5·40
					0·6		0·80			8·13
..	..	..		1	0·8	0·15	0·78	0·15	14·75	6·13
..	..	..		Nil	0·6	Nil	0·63	Nil	5·93	6·15
..	..	..		Nil	0·8	0·09	0·72	0·09	17·54	6·16
..	..	..		4	1·0	5·59	0·81	3·89	21·28	5·50
..	..	..		2	1·3	2·16	1·10	1·37	11·25	5·84
..	..	..		Nil	0·9	0·27	0·87	0·08	6·16	5·30
..	..	..		3	1·2	0·79	0·87	1·22	8·94	6·46
..	..	..		4	0·9	2·82	0·67	0·96	9·92	5·69
..	..	..		3	1·2	2·05	0·58	0·95	8·78	6·41
..	..	..		2	0·7	0·56	0·54	0·34	5·24	5·72
..	..	..		3	0·7	0·85	0·36	0·38	13·62	6 42
..	..	..		6	1·2	2·59	0·79	1·06	9·55	7·47
..	..	..		Nil	1·3	Nil	0·74	Nil	5·54	8·30
..	..	..		6	1·4	3·26	1·61	0·95	20·93	9·62
..	..	..		4	1·0	5·80	1·06	3·85	18·66	9·78
..	..	..		5	1·4	5·92	1·19	3·59	22·02	6·74
..	..	..		5	1·6	1·95	1·48	0·58	12·82	7·74
..	..	..		5	1·4	3·12	1·08	1·07	12·13	5·98
..	..	..		6	1·4	3·29	1·37	1·41	14·11	7·97
..	..	..		7	1·8	1·26	1·50	0·28	11·79	8·65
..	..	..		3	1·5	2·96	1·40	1·75	11·67	8·55
..	..	..		5	3·3	4·26	3·78	2·19	32·16	12·51
..	..	..		4	1·8	4·55	1·87	2·24	16·34	2·57
..	..	..		2	2·2	5·20	2·48	3·00	19·35	3·00
..	..	..		2	2·1	1·55	1·79	1·05	..	2·17
..	..	..		1	1·6	0·50	1·38	0·50	13·05	8·81
..	..	..		3	(*n*)	3·75	(*n*)	1·99	19·22	(*n*)
..	..	..		6	1·4	2·67	1·03	0·81	17·75	7·55
..	..	..		5	1·2	1·77	0·87	0·63	8·87	6·58
..	..	..		5	1·2	2·73	0·76	0·80	16·22	5·98
..	..	..		6	1·2	1·95	1·11	0·55	11·00	6·73
					1·1		0·85			6·05
					1·1		0·97			5·15
..	..	..		5	1·3	2·73	1·11	0·74	13·96	5·56
..	..	..		6	1·3	3·27	1·04	1·00	14·69	6·79
..	..	..		5	1·8	2·54	1·74	1·40	12·06	10·10
..	..	..		6	1·9	2·44	1·94	0·94	13·74	9·38
..	..	..		3	1·7	3·67	1·57	1·45	11·74	10·74
..	..	..		Nil	1·1	Nil	1·13	Nil	3·85	7·50
..	..	..		4	1·5	3·00	1·54	1·40	11·50	10·28
..	..	..		3	1·8	3·29	2·00	1·93	11·29	11·34
..	..	..		6	1·1	3·44	1·16	1·46	12·54	8·92
..	..	..		3	2·2	3·67	1·73	2·40	12·41	8·33
..	..	..		4	2·3	4·15	1·82	2·40	18·27	8·84
..	..	..		4	2·5	3·96	1·61	1·80	13·08	8·96
..	..	..		5	2·0	4·92	1·29	2·50	18·43	7·42
					2·8		2·57			7·28
..	..	..		3	2·2	2·90	1·93	1·21	6·60	7·45
..	..	..		4	(*n*)	3·24	(*n*)	1·73	15·04	(*n*)
..	..	..		4	(*n*)	2·69	(*n*)	1·30	11·74	(*n*)
..	..	..		5	(*n*)	3·89	(*n*)	1·85	13·00	(*n*)
..	..	..		5	(*n*)	4·80	(*n*)	2·20	14·12	(*n*)
..	..	..		5	(*n*)	2·41	(*n*)	0·91	8·23	(*n*)
..	..	..		5	(*n*)	4·81	(*n*)	1·71	25·14	(*n*)
..	..	..		4	1·3	2·05	1·06	0·80	15·84	6·20
..	..	..		Nil	0·5	Nil	0·25	Nil	7·83	6·07
..	..	..		1	0·4	0·56	0·23	0·56	10·78	7·91
..	..	..		Nil	0·2	Nil	0·14	Nil	5·03	5·33
..	..	..		Nil	0·2	0·09	0·18	0·05	6·87	5·85
..	..	..		Nil	0·4	0·07	0·32	0·07	8·06	7·47

(*n*) Not ascertained.

S. ABDULLAH, for *Director of Agriculture, Bengal.*

IRRIGATION DEPARTMENT,

Statement showing heights above P. W. D. datum and low water in the rivers Ganges, Bhagirathi, Jalangi and Brahmaputra for the

Date.	River Ganges.												
	Mirzapur. Zero of gauge is 200·00 ft. above P. W. D. datum.		Benares. Zero of gauge is 197·05 ft. above P. W. D. datum.		Buxar.* Zero of gauge is 169·91 ft. above Bengal P. W. D. datum.		Dinapore. Zero of gauge is 135·51 ft. above P. W. D. datum.		Monghyr. Zero of gauge is at P. W. D. datum.		Rajmahal. Zero of gauge is at P. W. D. datum.	
	Distance in miles.	From Allahabad, 86.	From Allahabad, 134.	From Mirzapur, 48.	From Benares, 90.		From Benares, 177.	From Buxar, 87.	From Benares, 287.	From Dinapore, 110.	From Benares, 407.	From Monghyr, 120.
	Highest guage reading.	2nd September 1916. 265·07 ft.	2nd September 1916. 244·55 ft.		7th September 1919. 203·40 ft.		21st August 1923. 172·41 ft.		8th September 1901. 129·60 ft.		15th August 1913. 90·37 ft.	
	Lowest gauge reading.	11th April 1878. 108·92 ft.	20th May 1879. 191·70 ft.		15th May 1914. 161·65 ft.		26th April 1902. 136·11 ft.		2nd May 1914. 95·75 ft.		12th May 1916. 55·46 ft.	
		Height above zero of gauge.	Height above P. W. D. datum.	Height above zero of gauge.	Height above P. W. D. datum.	Height above zero of gauge.	Height above P. W. D. datum.	Height above zero of gauge.	Height above P. W. D. datum.	Height above zero of gauge.	Height above P. W. D. datum.	Height above zero of gauge.	Height above P. W. D. datum.
1	2	3	4	5	6	7	8	9	10	11	12	13	14
1st ..	..	13·29	213·29	0·34	197·39	4·25	174·16	9·30	144·81	100·70	100·70	59·40	59·40
2nd ..	..	13·17	213·17	0·08	197·13	4·25	174·16	9·30	144·81	100·70	100·70	59·40	59·40
3rd ..	..	13·00	213·00	0·08	197·13	4·17	174·08	9·20	144·71	100·70	100·70	59·40	59·40
4th ..	..	12·92	212·92	0·00	197·05	4·17	174·08	9·20	144·71	100·40	100·40	59·45	59·45
5th ..	..	12·83	212·83	0·00	197·05	4·17	174·08	9·20	144·71	100·60	100·60	59·45	59·45
6th ..	..	12·75	212·75	(Below zero) 0·17	196·88	4·08	173·99	9·20	144·71	100·60	100·60	59·40	59·40
7th ..	..	12·67	212·67	0·25	196·80	4·08	173·99	9·10	144·61	100·60	100·60	59·35	59·35
8th ..	..	12·67	212·67	0·42	196·63	4·00	173·91	9·10	144·61	100·60	100·60	59·30	59·30
9th ..	..	12·58	212·58	0·50	196·55	3·10	173·74	9·10	144·61	100·60	100·60	59·20	59·20
10th ..	..	12·46	212·46	0·58	196·47	3·75	173·66	9·10	144·61	100·60	100·60	59·15	59·15
11th ..	..	12·42	212·42	0·67	196·38	3·67	173·58	9·10	144·61	100·40	100·40	59·10	59·10
12th ..	..	12·33	212·33	0·75	196·30	3·67	173·58	9·10	144·61	100·30	100·30	59·05	59·05
13th ..	..	12·20	212·20	0·92	196·13	3·67	173·58	9·00	144·51	100·30	100·30	59·15	59·15
14th ..	..	12·08	212·08	1·00	196·05	3·58	173·49	9·00	144·51	100·30	100·30	59·20	59·20
15th ..	..	11·96	211·96	1·00	196·05	3·58	173·49	8·90	144·41	100·30	100·30	59·15	59·15
16th ..	..	11·83	211·83	1·08	195·97	3·50	173·41	8·90	144·41	100·30	100·30	59·10	59·10
17th ..	..	11·75	211·75	1·17	195·88	3·42	173·33	8·80	144·31	100·30	100·30	59·05	59·05
18th ..	..	11·67	211·67	1·17	195·88	3·33	173·24	8·70	144·21	100·30	100·30	59·00	59·00
19th ..	..	11·62	211·62	1·25	195·80	3·25	173·16	8·70	144·21	100·30	100·30	58·95	58·95
20th ..	..	11·58	211·58	1·25	195·80	3·25	173·16	8·60	144·11	100·30	100·30	58·85	58·85
21st ..	..	11·50	211·50	1·33	195·72	3·25	173·16	8·60	144·11	100·30	100·30	58·80	58·80
22nd ..	..	11·42	211·42	1·42	195·63	3·17	173·08	8·50	144·01	100·30	100·30	58·85	58·85
23rd ..	..	11·38	211·38	1·42	195·63	3·17	173·08	8·50	144·01	100·30	100·30	58·90	58·90
24th ..	..	11·33	211·33	1·50	195·55	3·08	172·99	8·50	144·01	100·20	100·20	58·90	58·90
25th ..	..	11·29	211·29	1·67	195·38	3·08	172·99	8·50	144·01	100·20	100·20	58·90	58·90
26th ..	..	11·21	211·21	1·75	195·30	3·08	172·99	8·50	144·01	100·10	100·10	58·85	58·85
27th ..	..	11·17	211·17	1·83	195·22	3·00	172·91	8·50	144·01	100·10	100·10	58·80	58·80
28th ..	..	11·08	211·08	1·92	195·14	2·92	172·83	8·50	144·01	100·10	100·10	58·70	58·70
29th ..	..	11·00	211·00	2·00	195·05	2·83	172·74	8·50	144·01	100·10	100·10	58·65	58·65
30th ..	..	10·92	210·92	2·08	194·97	2·75	172·66	8·40	143·91	100·00	100·00	58·65	58·65
31st	..	..	..	..	..	..	..	..	..	..	..	..	..
Average level	..	12·00	212·00	(Below zero) 0·95	196·10	3·51	173·42	8·85	144·36	100·36	100·36	59·07	59·07

Note.—Since the 1st January 1929 the datum of all gauges has been finally altered to refer to the Bengal Public Works Department datum which is 6·25 feet above recorded since each gauge was established have been prepared.

*The zero of the Buxar gauge has been checked from the G. T. S. Bench marks Nos. 125 and 126 on line 70K and found to be 169·91 feet above the Bengal P. W. D.

†On and from 1st January 1931, high water level and low water level readings are shown at Swarupjganj.

(A) The value of zero of gauge at the station from 1st to 28th April 1934 was 34·74 P. W. D. datum and from 29th to 30th April 1934 it was 31·86 P. W. D.

The 22nd December 1934.

BENGAL.

month of April 1934 and the highest reading of each gauge above P. W. D. datum as well as the lowest gauge reading since 1876.

				River Bhagirathi.		River Jalangi.				River Brahmaputra.	
(A) Rampur-Boalia. Zero of gauge is at P. W. D. datum.		Goalundo. Zero of gauge is 1 409 ft. above Bengal P. W. D. datum.		Berhampore. Zero of guage is at P. W. D. datum.		Swarupganj.† Zero of guage is at P. W. D. datum.				Gauhati. Zero of gauge is 136·958 ft. above P. W. D. datum.	
From Benares, 471.	From Rajmahal, 64.	From Benares, 591.	From Rampur-Boalia, 120.								
6th August 1879. 62 24 ft.		16th August 1931. 29 60 ft.		14th August 1890. 63 46 ft.		25th September 1900. 35 30 ft.				24th August 1906. 169 25 ft	
24th April 1931. 32·05 ft.		8th February 1914. 2·41 ft.		26th May 1884. 32 00 ft.		7th May 1896. 2·11 ft.				9th February 1888. 129·23 ft.	
Height above zero of gauge.	Height above P. W D. datum.	Height above zero of gauge.	Height above P. W D. datum.	Height above zero of gauge.	Height above P. W D. datum.	Height above zero of guage.		Height above P. W. D. datum.		Height above zero of gauge.	Height above P. W. D. datum.
						H. W. L.	L. W. L.	H. W. L.	L. W. L.		
15	16	17	18	19	20	21	22	23	24	25	26
										(Below zero)	
0·65	35·39	7·80	9·209	34·45	34·45	6·10	4·70	6·10	4·70	5·80	131·158
0·60	35·34	8·20	9·609	34·45	34·45	6·54	5·01	6·54	5·01	6·00	130·958
0·60	35·34	8·50	9·909	34·45	34·45	6·61	5·22	6·61	5·22	6·10	130·858
0·65	35·39	8·80	10·209	34·44	34·44	6·56	5·24	6·51	5·24	6·30	130·658
0·70	35·44	8·80	10·209	34·44	34·44	6·16	5·06	6·16	5·06	6·10	130·858
0·70	35·44	8·50	9·909	34·44	34·44	5·20	4·47	5·20	4·47	5·40	131·558
0·65	35·39	8·10	9·509	34·43	34·43	4·48	4·08	4·48	4·08	4·40	132·558
0·65	35·39	7·40	8·809	34·40	34·40	4·19	3·84	4·19	3·84	4·20	132·758
0·60	35·34	7·40	8·809	34·35	34·35	4·38	3·85	4·38	3·85	3·10	133·858
0·60	35·34	7·60	9·009	34·25	34·25	4·74	4·05	4·74	4·05	0·10	136·858
0·45	35·19	7·80	9·209	34·24	34·24	5·16	4·22	5·16	4·22	0·60	136·358
0·45	35·19	8·30	9·709	34·24	34·24	5·68	4·60	5·68	4·60	1·20	135·758
0·40	35·14	8·70	10·109	34·24	34·24	6·04	4·86	6·04	4·86	1·00	135·958
0·40	35·14	9·50	10·909	34·35	34·35	6·53	5·24	6·53	5·24	1·20	135·758
0·40	35·14	9·80	11·209	34·50	34·50	6·71	5·14	6·71	5·14	0·80	136·158
0·40	35·14	9·80	11·209	34·50	34·50	6·34	5·04	6·34	5·04	0·20	136·758
										(Above zero)	
0·45	35·19	9·80	11·209	34·26	34·26	6·14	4·92	6·14	4·92	0·90	137·858
0·40	35·14	9·80	11·209	34·25	34·25	5·63	4·61	5·63	4·61	2·70	139·658
0·30	35·04	9·60	11·009	34·25	34·25	4·96	4·33	4·96	4·33	6·20	143·158
0·25	34·99	9·60	11·009	34·25	34·25	4·54	4·07	4·54	4·07	7·80	144·758
0·20	34·94	9·60	11·009	34·26	34·26	4·25	3·90	4·25	3·90	6·30	143·258
0·15	34·89	9·90	12·309	34·26	34·26	4·01	3·75	4·01	3·75	4·20	141·158
0·15	34·89	10·60	12·009	34·25	34·25	4·13	3·74	4·13	3·74	3·60	140·558
0·20	34·94	11·40	12·809	34·25	34·25	4·34	3·80	4·34	3·80	3·10	140·058
0·20	34·94	11·70	13·109	34·24	34·24	4·51	3·87	4·51	3·87	2·60	139·558
0·20	34·94	11·80	13·209	34·24	34·24	4·90	4·01	4·90	4·01	2·40	139·358
0·20	34·94	11·50	12·909	34·24	34·24	5·23	4·20	5·23	4·20	2·90	139·858
0·10	34·84	11·30	12·709	34·24	34·24	5·34	4·25	5·34	4·25	0·60	137·558
2·80	34·66	11·10	12·509	34·24	34·24	5·76	4·60	5·76	4·60	0·90	137·858
2·85	34·71	11·00	12·409	34·23	34·23	6·40	5·01	6·40	5·01	1·70	138·958
..	..	..	..	..	..	..	..	..	..	..	..
Vide footnote below.		0·12	10·529	34·32	34·32	5·39	4·46	5·39	4·46	(Below zero) 0·21	136·748

the Kidderpore Old Dock Sill. The values of the highest and lowest readings have similarly been altered. Printed notes on the correction to be applied to all reduced levels

datum.

datum. Hence the average level is twice shown thus :—from 1st to 28th April 1934, 0·42 and from 29th to 30th April 1934 2·88.

J. F. RUSSELL, *Personal Assistant to the Chief Engineer to the Government of Bengal, Irrigation Department.*

Abstract of audited accounts of the University of Dacca for the session 1933-34.

RECEIPTS.

Account heads.	Rs. A. P.	Receipts. Rs. A. P.	Opening balance Rs. A. P.	Total. Rs. A. P.
Capital account	....	4,557 14 5	48,665 4 2	53,223 2 7
Recurring account—				
I.—Grants from Government	5,83,920 0 0	....	....	....
II.—Fees (other than examination, athletic and union fees)	1,05,036 3 0	....	....	....
III.—Fees for registration of graduates	2,250 0 0	....	....	....
IV.—Examination fees	32,676 4 0	....	....	....
V.—Rents and rates	39,321 13 10	....	....	....
VI.—Interest on investments	71,619 14 0	....	....	....
VII.—Contributions	15,672 0 0	....	....	....
VIII.—Refunds	9,680 14 0	....	....	....
IX. Miscellaneous	5,910 6 9	....	....	....
X.—Transfer from Provident Fund	88,171 5 3	....	....	....
		9,55,158 12 10	5,06,598 7 9	14,61,757 4 7
Advances and deposits	.. ..	61,768 9 6*	—5,859 15 2	55,908 10 4
Provident Fund	.. ..	2,15,818 1 11‡	9,400 8 2	2,25,218 10 1
Gratuity Fund	.. ..	1,612 4 6	5,170 15 11	6,783 4 5
University Students' Information Bureau	.. ..	2,546 0 0	1,594 5 0	4,140 5 0
GRAND TOTAL	.. ..	12,41,461 11 2	5,65,569 9 10	18,07,031 5 0

*Includes athletic and union fees of Rs. 12,839-10-4.
‡ Includes Rs. 66,433-8-0, being sale-proceeds of investment.

EXPENDITURE.

Account heads.	Rs. A. P.	Expenditure. Rs. A. P.	Closing balance. Rs. A. P.	Total. Rs. A. P.
Capital account	....	48,895 6 11	4,327 11 8	53,223 2 7
Recurring account—				
I.—Teaching staff	4,11,183 15 3	....	....	....
II.—General administration	80,533 9 5	....	....	....
III.—Library	33,103 3 0	....	....	....
IV.—Laboratories and workshop	42,359 5 6	....	....	....
V.—Halls and residence	28,381 2 5	....	....	....
VI.—Medical Department	10,429 6 7	....	....	....
VII.—Physical education and discipline	6,459 3 9	....	....	....
VIII.—Buildings and Property Department	16,677 4 4	....	....	....
IX.—Provident Fund, leave and pension contribution and gratuity	49,611 0 5	....	....	....
X.—Cost of leave arrangements	5,373 2 0	....	....	....
XI.—Travelling expenses	6,105 15 3	....	....	....
XII.—General contingencies	6,738 9 5	....	....	....
XIII—Printing charges and cost of forms	1,519 4 6	....	....	....
XIV.—University publications	601 6 0	....	....	....
XV.—Maintenance of buildings, lands and property	25,392 10 3	....	....	....
XVI.—Rents and rates	33,776 3 2	....	....	....
XVII.—Electric and lighting charges	17,769 4 6	....	....	....
XVIII.—University studentships, scholarships, stipends and prizes	24,918 6 6	....	....	....
XIX.—Examination expenses	36,786 4 11	....	....	....
XX.—Grants and contributions	5,350 0 0	....	....	....
XXI.—Lectures by distinguished educationists	110 0 0	....	....	....
XXII.—Refunds	937 8 0	....	....	....
XXIII.—Miscellaneous	18,583 6 7	....	....	....
XXIV.—Provident Fund Reserve	66,433 8 0	....	....	....
		9,29,083 11 9	5,32,673 8 10	14,61,757 4 7
Advances and deposits	.. ..	53,080 6 6*	2,828 3 10	55,908 10 4
Provident Fund	.. ..	1,99,426 13 0‡	25,791 13 1	2,25,218 10 1
Gratuity Fund	.. ..	432 0 0	6,351 4 5	6,783 4 5
University Students' Information Bureau	.. ..	2,713 2 0	1,427 3 0	4,140 5 0
GRAND TOTAL	.. ..	12,33,631 8 2	5,73,399 12 10	18,07,031 5 0

* Includes athletic and union expenditure of Rs. 12,865 7 2.
‡ Includes Rs. 89,171-5-3, being excess of assets over liabilities to subscribers for 1932-33, transferred to the General Fund under Statute 20 (30)

B. P. SEN,
Chief Accountant.

K. SHAHABUDDIN,
Treasurer.

N. AHMAD,
Registrar.

DISTRICT REPORTS ON WEATHER AND CROPS.

For the week ending on the 26th December 1934.

Summary.—Dry weather continued. Harvesting of winter paddy is in brisk progress. Sowing of spring crops is nearly finished. Prospects of standing crops are generally fair. During the week ending Saturday, the 22nd December 1934, 460 persons attended different relief centres and 558 persons received gratuitous relief in the distressed areas of Murshidabad. In Birbhum, 1,485 men were employed on test relief works on Saturday, the 22nd December 1934. The average price of common rice for the province has fallen by about 0·66 per cent. as compared with that of the previous week.

Serial No.	District and sub-division.	Rainfall.	Price of common rice, in seers, per rupee.		Character of the weather, condition of crops, etc.
			This week.	Previous week.	
1	2	3	4	5	6
		Inches.			
1	24-Parganas ..	Nil	10 11/16	10 11/16	Weather seasonable. No damage to crops is reported. Fodder and water are sufficient. Export and import normal.
	Diamond Harbour	Nil	14†	13†	
	Barrackpore ..	Nil	10	10	
	Baraset ..	Nil	10	10	
	Basirhat ..	Nil	12	12	
2	Nadia ..	Nil	11½	11	Weather seasonable. Harvesting of *aman* paddy continues. Prospects of standing crops are fair. No large export or import. Stock of rice, fodder and water are sufficient.
	Kushtia ..	Nil	11½	11½	
	Meherpur ..	Nil	11	11	
	Chuadanga ..	Nil	11	11	
	Ranaghat ..	Nil	10	10	
3	Murshidabad ..	Nil	10½	10½	Weather seasonable. Prospects of standing crops are fair. Stock of rice, fodder and water are sufficient. No large export or import. Cattle-disease is reported from Jangipur subdivision. Test relief works continue. 355 men, 96 women and 9 children attended the test relief centres during the week ending Saturday, the 22nd December 1934. Number of persons receiving gratuitous relief in the distressed areas was 385 and 173 in Kandi and Lalbagh, subdivisions, respectively.
	Lalbagh ..	Nil	12½	12½	
	Jangipur ..	Nil	12	(*n*)	
	Kandi ..	Nil	11½	11½	
4	Jessore ..	Nil	11	11	Weather seasonable. Prospects of standing crops are fair. No large export or import. Fodder and water are sufficient.
	Jhenidah ..	Nil	13	13	
	Magura ..	Nil	12	12	
	Narail ..	Nil	13	13	
	Bongaon ..	Nil	10	9½	
5	Khulna ..	Nil	13	13	Weather seasonable. Its effects on crops are good. Fodder and water are sufficient.
	Satkhira ..	Nil	13	13	
	Bagerhat ..	Nil	10	9½	

†New.

(*n*) Not reported.

Serial No.	District and sub-division.	Rainfall.	Price of common rice, in seers, per rupee.		Character of the weather, condition of crops, etc.
			This week.	Previous week.	
1	2	3	4	5	6
		Inches.			
6	Burdwan ..	Nil	11	11	Weather seasonable. Condition of crop is not satisfactory. Fodder and water are sufficient.
	Asansol ..	Nil	10	10	
	Katwa ..	Nil	11	11	
	Kalna ..	Nil	10	10	
7	Birbhum ..	Nil	13	13	Weather seasonable. Prospects of standing crop are fair. Fodder and water are sufficient. 1,485 men were employed on test relief works on Saturday, the 22nd December 1934.
	Rampurhat ..	Nil	10	10	
8	Bankura ..	Nil	10½	10½	Weather seasonable. Prospects of standing crops are fair. Harvesting of winter paddy is nearing completion. Fodder and water are sufficient. Cattle-disease is reported from Vishnupur and Joypur thanas.
	Vishnupur ..	Nil	10	10	
9	Midnapore ..	Nil	12½	12½	Weather seasonable. Harvesting of paddy continues. Fodder and water are sufficient.
	Contai ..	Nil	14	13	
	Tamluk ..	Nil	9½	9½	
	Ghatal ..	Nil	13½	13½	
	Jhargram ..	Nil	13	13	
10	Hooghly ..	Nil	11	11	Weather seasonable. Fodder and water are sufficient.
	Serampore ..	Nil	10	10	
	Arambagh ..	Nil	11½	11½	
11	Howrah ..	Nil	10	10	Weather seasonable. Its effects on crops are good. Harvesting of winter paddy continues. Fodder and water are sufficient.
	Uluberia ..	Nil	11	11	
12	Rajshahi (Rampur Boalia).	Nil	12	12	Weather seasonable and favourable to crops. Harvesting of winter paddy continues. Fodder and water are sufficient.
	Naogaon ..	(n)	(n)	(n)	
	Nator ..	(n)	(n)	9½	
13	Dinajpur ..	Nil	10	10	Weather seasonable. Its effects on agricultural operations are favourable. Fodder and water are sufficient.
	Thakurgaon ..	Nil	12	12	
	Balurghat ..	Nil	13	13	
14	Jalpaiguri ..	Nil	13	13	Weather seasonable. Fodder and water are sufficient.
	Alipur ..	Nil	13	13	

(n) Not reported.

Serial No.	District and sub-division.	Rainfall.	Price of common rice, in seers, per rupee.		Character of the weather, condition of crops, etc.
			This week.	Previous week.	
1	2	3	4	5	6
		Inches.			
15	Darjeeling ..	Nil	8	8	Weather favourable. Fodder and water are sufficient. Cattle-disease exists at places.
	Kurseong ..	Nil	7½	7½	
	Siliguri ..	Nil	13	12	
	Kalimpong ..	(a)	(a)	7½	
16	Rangpur ..	Nil	10	10	Weather seasonable. Prospects of standing crops are fair. Harvesting of *aman* paddy continues. No large export or import. Fodder and water are sufficient.
	Nilphamari ..	Nil	10	10	
	Kurigram ..	Nil	10	10	
	Gaibandha ..	Nil	12	12	
17	Bogra ..	Nil	14½	14½	Weather seasonable. Condition of standing crops is fair. No damage. Fodder and water are sufficient.
18	Pabna ..	Nil	10½	10½	Weather seasonable. Condition of standing crops is good. Fodder and water are sufficient.
	Serajganj ..	Nil	10	10	
19	Malda ..	Nil	12½	12½	Weather seasonable. Prospects of standing crops are fair. Fodder and water are available
20	Cooch-Behar ..	Nil	13 3/5	12 5/10	Weather seasonable. Transplantation of tobacco seedlings and harvesting of winter paddy continue. Prospects and condition of standing crops are fair. Fodder and water are sufficient.
21	Dacca ..	Nil	11½	11½	Rainfall at North Sadar (Kapasia) nil. Weather seasonable and its effects on agricultural operations are fair. Harvesting of *aman* paddy continues. Prospects of crops are fair. Fodder and water are available.
	Manikganj ..	Nil	11½	11½	
	Narayanganj ..	Nil	10½	10½	
	Munshiganj ..	Nil	11½	11½	

(a) Not reported.

Serial No.	District and sub-division.	Rainfall.	Price of common rice, in seers, per rupee.		Character of the weather, condition of crops, etc.
			This week.	Previous week.	
1	2	3	4	5	6
		Inches.			
22	Mymensingh ..	Nil	10	10	Weather seasonable. Condition of crops is good. Fodder and water are available.
	Jamalpur ..	Nil	12½	12½	
	Tangail ..	Nil	10½	10½	
	Netrakona ..	Nil	11	11	
	Kishorganj ..	Nil	10	10	
23	Faridpur ..	Nil	12½	12½	Weather seasonable. Condition of standing crops is fair. Fodder and water are sufficient.
	Goalundo (Rajbari).	Nil	9½	9½	
	Madaripur ..	Nil	13½	13	
	Gopalganj (a) ..	Nil	16	16	
24	Bakarganj (Barisal).	Nil	11	10	Weather seasonable. Prospects of crops are good. Fodder and water are sufficient.
	Pirojpur ..	Nil	10½	10	
	Patuakhali ..	Nil	13	10	
	Dakshin Shabazpur (Bhola).	Nil	10	(n)	
25	Chittagong ..	Nil	12 13*	12 13*	Weather seasonable. Harvesting of *aman* crops is in progress. Sowing of *rabi* crops is almost completed. Prospects of crops are fair. Fodder and water are sufficient. Pangi salt sells at 13 seers per rupee at Sadar and 12 seers per rupee at Cox's Bazar.
	Cox's Bazar ..	Nil	13	(n)	
26	Tippera (Comilla)	Nil	12½	12½	Prospects of crops are fair generally.
	Brahmanbaria ..	Nil	10½	10½	
	Chandpur ..	Nil	13	13	
27	Noakhali ..	Nil	13½	13	Weather seasonable. Standing crops are fair.
	Feni ..	Nil	14	13½	
28	Chittagong Hill Tracts.	Nil	12	12	Weather seasonable.
29	Tripura State ..	Nil	11½	(n)	Weather seasonable. Condition of standing crops is fair. Cotton sells at Rs. 8 to Rs. 12½ and jute at Rs. 2-8 to Rs. 3-12 per maund.

(a) The rainfall at Haridaspur, which is very near to Gopalganj, is shown here.

* Burma rice.

(n) Not reported.

J. C. BASU, for *Director of Agriculture, Bengal.*

Dacca, the 27th December 1934.

Wholesale prices-current of food grains, gur, etc., in the undermentioned marts of Bengal for the first half of December 1934.

Marts.	Paddy local (best quality).			Paddy local (common quality).			Rice local (best quality).		
	Present return.	Next preceding return.	Corresponding return of last year.	Present return.	Next preceding return.	Corresponding return of last year.	Present return.	Next preceding return.	Corresponding return of last year.
1	2	3	4	5	6	7	8	9	10
	Rs. a. p.	Rs. a. p.	Rs. a. p.	Rs. a. p.	Rs. a. p.	Rs. a. p.	Rs. a. p.	Rs. a. p.	Rs. a. p.
Calcutta	2 10 0	2 14 0	2 4 0	2 6 0	2 6 0	2 0 0	5 8 0	5 8 0	5 8 0
Burdwan	2 0 0	2 0 0	2 0 0	1 14 0	1 14 0	1 13 0	4 8 0	4 12 0	4 6 0
Midnapore	2 5 0	2 6 0	1 12 0	1 15 0	2 2 0	1 10 0	4 4 0	4 4 0	3 10 0
Chittagong	1 12 0	1 13 0	1 8 0	1 8 0	1 9 0	1 4 0	4 10 0	4 12 0	4 8 0
Dacca	1 14 0	2 4 0	2 0 0	1 8 0	2 0 0	1 14 0	4 0 0	4 0 0	4 0 0
Pabna	2 10 6	2 10 6	2 0 0	2 2 6	2 2 6	1 8 0	4 8 0	4 8 0	4 0 0
Rangpur	2 4 0	2 4 0	2 4 0	2 0 0	2 0 0	1 14 0	5 0 0	5 0 0	5 0 0
Serajganj (Pabna)	..	..	..	..	..	..	..	..	..
Sarisabari (Mymensingh) ..	..	..	..	..	..	..	..	..	..
Narayanganj (Dacca)	..	..	..	..	..	..	..	..	..

Marts.	Rice local (common quality).			Wheat.			Raw cotton.		
	Present return.	Next preceding return.	Corresponding return of last year.	Present retdrn.	Next preceding return.	Corresponding return of last year.	Present return.	Next preceding return.	Corresponding return of last year.
	11	12	13	14	15	16	17	18	19
	Rs. a. p.	Rs. a. p.	Rs. a. p.	Rs. a. p.	Rs. a. p.	Rs. a. p.	Rs. a. p.	Rs. a. p.	Rs. a. p.
Calcutta	4 12 0	4 12 0	4 0 0	3 4 0 to 3 6 0	3 2 0	3 4 0	16 12 0	16 0 0	14 8 0
Burdwan	3 8 0	3 13 0	3 4 0	..	..	..	..	..	..
Midnapore	3 2 0	3 8 0	2 8 0	..	..	..	..	..	..
Chittagong	3 7 0	3 8 0	3 0	..	..	..	..	..	..
Dacca	3 6 0	3 0 0	3 12 0	..	..	..	..	..	..
Pabna	3 12 0	0	3 0 0	..	..	..	..	..	..
Rangpur	4 6 0	4 6 0	3 12 0	..	..	..	..	..	..
Serajganj (Pabna)	..	..	..	..	..	..	..	..	..
Sarisabari (Mymensingh) ..	..	..	..	..	..	..	..	..	..
Narayanganj (Dacca)	..	..	..	..	..	..	..	..	..

Marts.	Coal.			Raw jute (weighted average).			*Gur* (sugarcane).		
	Present return.	Next preceding return.	Corresponding return of last year.	Present return.	Next preceding return.	Corresponding return of last year.	Present return.	Next preceding return.	Corresponding return of last year.
	20	21	22	23	24	25	26	27	28
	Rs. a. p.	Rs. a. p.	Rs. a. p.	Rs. a. p.	Rs. a. p.	Rs. a. p.	Rs. a. p.	Rs. a. p. (a)	Rs. a. p.
Calcutta	0 6 6	0 6 6	0 6 6	4 7 8	4 4 0	3 15 3	4 10 6	7 8 0	5 8 0
Burdwan	..	..	..	..	..	..	4 8 0	5 0 0	5 8 0
Midnapore	..	..	..	..	..	..	4 8 0	4 8 0	3 8 0
Chittagong	..	..	..	..	..	..	8 0 0	8 0 0	5 12 0
Dacca	..	..	..	..	..	..	5 4 0	5 0 0	5 0 0
Pabna	..	..	..	..	..	..	4 0 0	4 0 0	4 8 0
Rangpur	..	..	..	..	..	..	4 0 0 to 5 4 0	4 0 0 to 5 4 0	4 0 0 to 4 8 0
Serajganj (Pabna)	..	..	..	3 10 0	3 8 0	3 2 0	..	..	..
Sarisabari (Mymensingh) ..	..	..	..	5 0 0 to 4 14 0	4 5 0 to 4 10 0	3 14 0 to 2 10 0	..	..	..
Narayanganj (Dacca)	..	..	..	3 0 0 to 4 10 0	2 12 0 to 4 8 0	4 5 0 to 2 5 0	..	..	..

(a) New.

Dacca, the 22nd December 1934.

S. ABDULLAH, for *Director of Agriculture, Bengal.*

Prices-current (retail) of common rice and salt in the districts of Bengal for the first half of December 1934.

Districts and Marts.	Quantity per rupee in seers of eighty tolas.								
	Common rice.						Salt.		
	Average.			Cheapest.					
	Present return.	Next preceding return.	Corresponding return of last year.	Present return.	Next preceding return.	Corresponding return of last year.	Present return.	Next preceding return.	Corresponding return of last year.
	S. Ch.	S. Ch.	S. Ch.	S. Ch.	S. Ch.	S. Ch.	S. Ch.	S. Ch.	S. Ch.
Presidency Division.									
24-Parganas—									
1 Chetla Hat ..	10 6	10 13	11 14	11 7	13 5	14 6	17 9	17 9	16 10
2 Mogra Hat ..	(a) 13 5 11 0	10 11	10 10	(a) 13 14	11 7	13 5	16 0	16 0	16 0
3 Calcutta-Beliaghata	8 8	8 8	9 10	12 4	12 4	11 7	16 0	16 0	13 0
Nadia—									
4 Goari	10 10	10 0	13 0	13 4	13 0	(n)	13 0†	13 0†	13 0†
5 Ranaghat ..	10 0	9 0	11 0	13 0	13 0	(n)	14 0†	14 0†	13 0†
Murshidabad—									
6 Berhampore ..	10 8	10 0	13 8	11 8	11 0	15 0	14 0*	14 0*	14 0*
7 Kandi	11 0	10 8	15 0	11 8	11 0	16 0	14 0	14 0	14 0
8 Jangipur ..	11 0	11 0	16 0	12 0	12 0	16 8	15 0	15 0	16 0
Jessore—									
9 Sadar	11 0	11 0	13 0	12 0	12 0	14 8	15 0†	15 0†	14 0* 15 0
10 Bongaon ..	9 4	8 8	11 0	12 6	11 8	13 0	14 8 13 0*	14 0 13 0*	13 8 12 8*
Khulna—									
11 Sadar	10 0	10 0	13 0	14 0	13 0	14 0	13 0 12 0*	14 0†	13 0†
12 Bagerhat ..	9 8	9 8	11 0	10 0	10 0	12 0	13 8	13 8	13 8
Burdwan Division.									
Burdwan—									
13 Sadar	11 0	10 0	11 0	12 0	12 0	12 0	14 0†	13 0†	13 8 16 0*
14 Kalna	9 6	9 0	10 4	(a) 11 6	10 0	11 8	16 0†	16 0†	16 0
Birbhum—									
15 Suri	12 0	13 0	15 0	13 0	14 0	16 0	14 0	14 0	14 0
16 Rampurhat ..	10 0	10 0	15 0	11 0	11 0	16 0	16 0	16 0	16 0
Bankura—									
17 Sadar	12 0	11 0	14 8	14 0	12 8	15 0	14 0	14 0	14 0†
18 Vishnupur ..	10 8	10 0	13 8	11 8	11 4	14 8	13 0	13 0	13 0

* Karkach. (a) New. (n) Not reported.

N.B.—The prices of Karkach and Liverpool salt tally with each other in marts marked †.

Prices-current (retail) of common rice and salt in the districts of Bengal for the first half of December 1934.

Districts and Marts.	Quantity per rupee in seers of eighty tolas.								
	Common rice.						Salt.		
	Average.			Cheapest.					
	Present return.	Next preceding return.	Corresponding return of last year.	Present return.	Next preceding return.	Corresponding return of last year.	Present return.	Next preceding return.	Corresponding return of last year.
	S. Ch.	S. Ch.	S. Ch.	S. Ch.	S. Ch.	S. Ch.	S. Ch.	S. Ch.	S. Ch.
BURDWAN DIVISION—*concld.*									
Midnapore—									
19 Sadar	12 8	11 8	14 8	13 0	12 0	15 0	14 0	14 0	15 0*
20 Contai	10 0	12 0	14 0	14 0	13 0	16 0	16 0‡	12 0	24 8
Hooghly—									
21 Sadar	11 0	11 0	13 5	13 0	13 0	15 1	14 0	14 0	16 0
22 Arambagh ..	11 8	11 8	13 4	12 8	12 8	14 0	15 4 14 12*	15 4 14 12	14 8 14 0*
Howrah—									
23 Sadar	10 0	10 0	12 8	12 0	11 0	13 8	15 0	16 0	16 0
24 Uluberia ..	11 0	11 0	12 0	11 8	12 0	13 0	15 0	16 0	16 0
RAJSHAHI DIVISION.									
Rajshahi—									
25 Rampur-Boalia ..	10 12	10 12	12 8	12 6	12 6	16 0	13 4†	13 4†	13 8 13 0*
26 Nator	9 12	9 12	(n)	10 8	10 8	12 0	12 0†	12 0†	12 0†
27 Dinajpur—Railbazar Hat.	11 0 (a)	11 0	13 4	11 6 (a)	11 6	14 0	13 9 13 0*	13 9 13 0*	14 8†
28 Jalpaiguri—Sadar ..	13 0	9 0	11 0	14 0	10 0	13 0	13 0	13 0	13 0
Darjeeling—									
29 Sadar	9 8	9 8	9 0	10 0	10 0	11 0	10 0 9 8*	10 0 9 8*	10 0 8 0*
30 Siliguri ..	12 0	10 0	10 0	13 0	10 8	10 8	12 0†	12 0†	11 0†
Rangpur—									
31 Sadar	10 0	10 0	12 0	10 2	10 2	12 0	13 0	13 0	12 8
32 Nilphamari ..	10 0	10 0	(n)	12 0 (a) 10 8	10 8 (a)	11 0	12 8*	12 8*	12 8*
33 Bogra—Sadar ..	9 6	9 6	13 8	14 4	14 4	15 4	14 2	14 2	12 0
Pabna—									
34 Sadar	10 4	10 0	13 4	12 0	11 4	14 8	14 0†	13 4†	13 4†
35 Serajganj ..	10 0	10 0	12 0	11 8	11 8	13 0	16 0 15 0*	16 0 15 0*	16 0 15 0*
Malda—									
36 Sadar	10 8	11 0	15 8	11 8	12 8	16 0	14 8 14 0*	14 8 14 0*	14 0 14 8*
37 Balia—Nawabganj	11 0	11 4	16 8	12 0	12 0	17 8	14 12 14 0*	14 12 14 0*	15 0 14 0*

*Karkach. (n) Not reported. ‡ Profuse supply.

N. B.—The prices of Karkach and Liverpool salt tally with each other in marts marked †.

(a) (New).

Prices-current (retail) of common rice and salt in the districts of Bengal for the first half of December 1934.

Districts and Marts.	Quantity per rupee in seers of eighty tolas.								
	Common rice.						Salt.		
	Average.			Cheapest.					
	Present return.	Next preceding return.	Corresponding return of last year.	Present return.	Next preceding return.	Corresponding return of last year.	Present return.	Next preceding return.	Corresponding return of last year.
	S. Ch.	S. Ch.	S. Ch.	S. Ch.	S. Ch.	S. Ch.	S. Ch.	S. Ch.	S. Ch.
Dacca Division.									
Dacca—									
38 Sadar	13 0	11 8	10 0	14 0	12 12	12 8	13 0 13 4*	13 0†	13 5 14 0*
39 Mirkadim ..	11 8	11 0	13 8	13 0	13 0	14 0	14 8*	14 8*	13 8*
Mymensingh—									
40 Nasirabad ..	12 0	11 0	10 0	13 0	12 4	12 0	13 0*	13 0*	12 0*
41 Netrakona ..	11 0	8 12	(*n*)	11 8	11 8	11 12	14 0 12 4*	13 4 12 4*	14 8 12 8*
Faridpur—									
42 Sadar ..	12 4	12 0	11 0	14 8	13 8	12 8	12 0	12 0	12 8
43 Rajbari ..	9 8	9 8	11 0	11 8	11 8	13 0	12 0	12 0	12 0
Bakarganj—									
44 Barisal ..	10 0	10 0	9 8	12 0	12 0	10 0	15 0†	15 0†	14 0 15 0*
45 Pirojpur ..	10 0	10 0	11 0	10 2	10 2	11 4	11 0†	11 0†	11 0†
Chittagong Division.									
Tippera—									
46 Comilla ..	10 0	9 6	10 0	12 5	12 5	13 5	12 13 10 10*	12 13 10 10*	12 13 10 10*
47 Chandpur ..	13 5	12 0	13 0	14 8	13 0	14 0	13 5	13 5	13 0†
Noakhali—									
48 Kalitara Hat ..	10 0	10 0	9 0	13 0	13 0	13 0	13 0 10 8*	13 0 10 0*	13 0 10 0*
49 Feni Hat ..	10 12	9 14	13 0	(*a*) 12 13	10 8	14 0	14 0 10 0*	14 0 10 0*	14 0 10 0*
Chittagong—									
50 Sadar	11 0	10 0	10 0	12 8	12 0	14 0	13 0	13 0	16 0
51 Cox's Bazar ..	12 0	11 0	13 0	13 0	12 0	14 0	13 0	13 0	13 0
52 Chittagong Hill Tracts —Rangamati ..	12 0	14 0	14 0	14 0	15 0	18 0	8 0* 13 0	6 8* 13 0	6 8* 13 0

* Karkach. (*a*) New. (*n*) Not reported.

N, B.—The prices of Karkach and Liverpool salt tally with each other in marts marked †.

Dacca, the 22nd December 1934. S. ABDULLAH, for *Director of Agriculture, Bengal.*

Statement showing the gauge readings at Dacca Waterworks Station on the river Buriganga for the week ending 15th December 1934.

Date.	At highest water.		At lowest water.		Commencement of—		Remarks.	
	Time.	Reading.	Time.	Reading.	Ebb tide.	Flow tide.	At 7 a.m.	At 5 p.m.
1934.								
9th December ..	13-35	7·45	7-40	6·05	13-45	7-50	6·1	6·65
10th „ ..	14-25	7·4	8-25	6·0	14-35	8-38	6·2	6·75
11th „ ..	15-15	7·3	9-10	5·9	15-27	9-22	6·25	6·9
12th „ ..	16-0	7·0	10-0	5·6	16-15	10-12	6·05	6·8
13th „ ..	16-50	6·8	10-45	5·4	17-0	10-55	5·95	6·8
14th „ ..	..	..	11-35	5·25	..	11-45	6·1	6·3
15th „ ..	6-35	6·45	12-25	5·0	6-42	12-35	6·3	6·05

B. M. on settling tank 39·49 O. M. S. L. Zero is at O. M. S. L.

Notable high and low water-levels of previous years.

		Taken at high tide.				Taken at low tide.
27th August	1906 ..	70·5	23rd February	1907 ..	51·06
5th September	1909 ..	66·86	13th „	1908 ..	51·06
10th August	1910 ..	69·86	12th March	1912 ..	51·06
1st „	1911 ..	68·46	6th „	1914 ..	50·60
13th „	1912 ..	67·16	22nd February	1915 ..	50·30
31st „	1915 ..	69·7	15th „	1916 ..	50·60
8th „	1916 ..	68·1	3rd March	1917 ..	51·0
12th „	1917 ..	67·1	21st February	1918 ..	51·40
13th „	1918 ..	69·12	26th „	1919 ..	50·4
2nd „	1919 ..	66·8	18th „	1920 ..	50·9
8th September	1920 ..	66·9	19th „	1921 ..	50·9
28th July	1921 ..	68·4	8th March	1922 ..	51·05
10th August	1922 ..	68·00	14th „	1923 ..	50·8
31st July	1923 ..	66·15	16th February	1924 ..	50·50
29th August	1924 ..	68·82	5th March	1925 ..	50·9
8th September	1925 ..	68·52	9th February	1926 ..	2·2
15th August	1926 ..	19·6	27th „	1927 ..	2·10
17th September	1927 ..	18·70	16th „	1928 ..	2·2
22nd August	1928 ..	20·0	21st „	1929 ..	2·0
13th July	1929 ..	17·8	24th „	1930 ..	2·3
12th September	1930 ..	18·65	28th „	1931 ..	2·2
16th August	1931 ..	21·7	18th „	1932 ..	1·8
6th September	1932 ..	18·5	6th „	1933 ..	2·10
7th „	1933 ..	17·80			

N.B.—Zero of the gauge at Dacca Waterworks prior to 11 a.m. on the 8th January 1926= —48·51 with reference to P. W. D. datum.

Zero of the gauge at Dacca Waterworks since 11 a.m. of the 8th January 1926=0·00 with reference to P. W. D. datum.

M. K. BHATTACHERJEE, *Executive Engineer,*
Khulna Division.

Khulna, the 21st December 1934.

Statement of weekly gauge readings on the river Ganges at Rampur Boalia for the week ending the 22nd December 1934.

Date.	Hour.	Height of surface above P. W. D. datum.	Height of surface above P. W. D. datum on the same date last year.	Remarks.
1934.				
16th December	7 a.m.	40·96	40·34	
17th „	7 „	40·91	40·34	
18th „	7 „	40·76	40·21	Zero of gauge referred to B. M. on Rajshahi College step; value 64·73.
19th „	7 „	40·71	40·11	Value of 0=40·26 P. W. D.
20th „	7 „	40·66	39·96	
21st „	7 „	40·56	39·86	
22nd „	7 „	40·46	39·76	

Highest recorded level on 26-8-1879=64·24.
Lowest recorded level on 24-4-1931=32·05.

J. MACKIE, *Subdivisional Officer,*
Irrigation Department, Rajshahi.

Rampur Boalia, the 24th December 1934.

CALCUTTA IMPROVEMENT TRUST.

NOTIFICATION.

Calcutta, the 22nd December 1934.

It is hereby notified under section 7(*4*) of the Calcutta Improvement Act, 1911, that Mr. W. H. Thompson, M.L.C., of the Bengal Telephone Corporation, Ltd., whose term of office expired on the 27th November 1934, has been re-elected by the Bengal Chamber of Commerce to be their representative on the Board of Trustees for the Improvement of Calcutta.

C. W. GURNER, *Chairman (offg.).*

DEPARTMENT OF AGRICULTURE, BENGAL.

Ramna, Dacca, the 22nd December 1934.

Daily Rainfall recorded in Bengal for the month of May 1934, published in the *Calcutta Gazette* of 28th June 1934.

ERRATA SLIP.

Pages 862 and 865 of the gazette.—On 5th and 29th against Saugar Island (Obsy.) *substitute* "0·03" and "0·03" *for* "Nil" and "Nil", respectively.

Pages 871 and 872 of the gazette.—On 20th and 26th against Rangpur (Obsy.) *substitute* "0·04" and "0·31" *for* "(*a*)" and "0·03", respectively.

Pages 874 and 875 of the gazette.—On the 4th and 20th against Comilla (Obsy.) and Chittagong (Obsy.) *substitute* "0·11" and "0·94" *for* "0·13" and "(*b*)", respectively.

On page 865 of the gazette.—Under head "Total rainfall for the month" and "Total rainfall from 1st March to 31st May 1934" against Saugar Island (Obsy.) *substitute* "0·92" and "0·95" *for* "0·86" and "0·89", respectively.

On page 873 of the gazette.—Under head "Number of rainy days", "Total rainfall for the month" and "Total rainfall from 1st March to 31st May 1934" against Rangpur (Obsy.) *substitute* "12", "10·43" and "14·74" *for* "11", "10·11" and "14·42", respectively.

Page 877 of the gazette.—Under head "Number of rainy days", "Total rainfall for the month" and "Total rainfall from 1st March to 31st May 1934" against Chittagong (Obsy.) *substitute* "12", "8·76" and "12·54" *for* "11", "7·82" and "11·60", respectively.

Page 877 of the gazette.—Under head "Total rainfall for the month" and "Total rainfall from 1st March to 31st May 1934" against Comilla (Obsy.) *substitute* "13·52" and "18·51" *for* "13·54" and "18·53", respectively.

S. ABDULLAH,
for *Director of Agriculture, Bengal.*

Printed and published by the Superintendent, Government Printing, Bengal Government Press, Alipore, Bengal, on the 3rd January 1935.

Registered No. C207

No. 2 of 1935

The Calcutta Gazette

Published by Authority

THURSDAY, JANUARY 10, 1935.

CONTENTS:

	Page.
Part I.—Orders and Notifications by the Governor of Bengal, the Government of Bengal, the High Court, Government Treasury, etc.	15—34
Part IA.—Orders and Notifications by the Government of India republished for general information	1—2
Part IB.—Educational Notices ..	43—107
Part II.—Advertisements	28—36
Part III.—Acts of the Bengal Legislative Council	*Nil*
Part IV.—Bills introduced in the Bengal Legislative Council, Reports of Select Committees presented or to be presented to that Council, and Bills published before introduction in that Council	*Nil*
Part V.—Acts of the Indian Legislature assented to by the Governor-General and Ordinances promulgated under section 72 of the Government of India Act ..	*Nil*
Part VI.—Bills introduced in the Council of State and Legislative Assembly, Reports of Select Committees presented to the Council and Assembly and Bills published under rule 18 of the Indian Legislative Rules	*Nil*
Supplement No. 2 :— Cotton Ginning and Pressing—Weekly gauge readings—Weekly Weather and Crop Report	33—38

PART I

Orders and Notifications by the Governor of Bengal, the Government of Bengal, the High Court, Government Treasury, etc.

Orders by His Excellency the Governor of Bengal.

No. 11801.—29th December, 1934.—In exercise of the power conferred by sub-section (2) of section 72B of the Government of India Act, His Excellency the Governor declared the Bengal Legislative Council prorogued on the 22nd December, 1934.

A. deC. Williams,
Secy. to the Govt. of Bengal.

Orders by the Government of Bengal.

No. 37A.

Appointments and Transfers.

General.

Chittagong Divn. — No. 15052A. — 24th December 1934.—Maulvi Muhammad Obaidul Kader, Sub-Deputy Collector, on leave, is posted to the Chittagong Division.

Dacca Divn.—No. 15056A.—24th December 1934.—Maulvi Kabiruddin Ahmad Khan, Sub-Deputy Collector, on leave, is posted to the Dacca Division.

Dacca Divn.—No. 15060A.—24th December 1934.—Babu Ramsebak Bhattacharji, Sub-Deputy Collector, on leave, is posted to the Dacca Division.

Dacca Divn.—No. 15064A.—24th December 1934.—Maulvi Abdul Majid Chaudhuri, Sub-Deputy Collector, on leave, is posted to the Dacca Division.

Dacca Divn.—No. 15068A.—24th December 1934.—Babu Dhirendra Nath Khan, Sub-Deputy Collector, on leave, is posted to the Dacca Division.

Rajshahi Divn.—No. 15072A.—24th December 1934.—Khan Sahib Kazi Fazlul Karim, Sub-Deputy Collector, on leave, is posted to the Rajshahi Division.

Presidency Divn. — No. 15076A. — 24th December 1934.—Maulvi A. K. M. Abdul Latif, Sub-Deputy Collector, on leave, is posted to the Presidency Division.

Presidency Divn. — No. 15080A. — 24th December 1934.—Babu Narendra Nath Mukharji, Sub-Deputy Collector, on leave, is posted to the Presidency Division.

Pabna-Dacca Divn. — No. 15084A. — 24th December 1934.—Babu Upendra Nath Biswas, Sub-Deputy Collector, Pabna, is posted to the Dacca Division.

Presidency Divn. — No. 15088A. — 24th December 1934.—Babu Satyendra Nath Das Gupta, Sub-Deputy Collector, is posted to the Presidency Division on being relieved of his duties in the Settlement Department.

Calcutta.—No. 33A.—3rd January 1935.—Mr. T. J. Y. Roxburgh, C.S.M., I.C.S., is appointed to act as Secretary to the Government of Bengal in the Judicial Department and as Superintendent and Remembrancer of Legal Affairs, Bengal, during the absence, on leave, of Mr. N. G. A. Edgley, I.C.S., or until further orders.

Leave.

GENERAL.

No. 15093A.—24th December 1934.—The orders of the 19th December 1934, granting leave to Babu Satyendra Nath Das Gupta, Sub-Deputy Collector, employed in the Settlement Department, are cancelled.

Rajshahi.—No. 15095A.—24th December 1934.—Babu Kanti Chandra Mukharji, Deputy Magistrate and Deputy Collector, Rajshahi, is allowed privilege leave for three months, under article 260 of the Civil Service Regulations, with effect from the 2nd January 1935.

Chittagong.—No. 15098A.—24th December 1934.—Babu Satyendra Nath Batabyal, Deputy Magistrate and Deputy Collector, Chittagong, is allowed leave on average pay for four months, under rule 81 (*b*) (*ii*) of the Fundamental Rules, with effect from the 2nd January 1935.

Chittagong.—No. 15101A.—24th December 1934.—Maulvi Abu Muhammad Nasiruddin, Deputy Magistrate and Deputy Collector, Chittagong, is allowed leave on average pay for four months, under rule 81 (*b*) (*ii*) of the Fundamental Rules, with effect from the 2nd January 1935.

Pabna. — No. 15106A. — 24th December 1934.—Maulvi Abul Kasem Wajihuddin Ahmad, Deputy Magistrate and Deputy Collector, Pabna, is allowed privilege leave for four months, under article 260 of the Civil Service Regulations, with effect from the 16th January 1935, or any subsequent date on which he may be relieved.

Khulna. — No. 15163A. — 26th December 1934.—Babu Surendra Nath Biswas, Deputy Magistrate and Deputy Collector, Bagerhat, Khulna, is allowed leave on average pay for three months, under rule 81 (*b*) (*ii*) of the Fundamental Rules, with effect from the 2nd January 1935.

Nadia. — No. 15171A. — 26th December 1934.—Babu Surendra Nath De, Deputy Magistrate and Deputy Collector, on probation, Nadia, is allowed leave on average pay for four months, under rule 81 (*b*) (*ii*) of the Fundamental Rules, with effect from the 2nd January 1935.

Jessore.—No. 15174A.—26th December 1934.—Maulvi Din Muhammad, Sub-Deputy Collector, Bongaon, Jessore, is allowed leave on average pay for four months, under rule 81 (*b*) (*ii*) of the Fundamental Rules, with effect from the 2nd January 1935.

Bakarganj.—No. 15176A.—26th December 1934.—Maulvi Saiyid Abdul Ali, Sub-Deputy Collector, Bakarganj, is allowed leave on average pay, under rule 81 (*b*) (*ii*) of the Fundamental Rules, from the 2nd January to the 31st March 1935, inclusive.

Mymensingh.—No. 15179A.—26th December 1934.—Babu Kshitish Chandra Chakrabatti, Deputy Magistrate and Deputy Collector, Tangail, Mymensingh, is allowed leave on average pay for six weeks, under rule 81 (*b*) (*ii*) of the Fundamental Rules, with effect from the 2nd January 1935.

Tippera. — No. 15182A. — 26th December 1934.—Babu Nripendra Mohan Chakrabatti, Sub-Deputy Collector, Tippera, is allowed leave on average pay for two months, under rule 81 (*b*) (*ii*) of the Fundamental Rules, with effect from the 3rd January 1935, or any subsequent date on which he may avail himself of it.

Faridpur.—No. 15185A. — 26th December 1934.—Babu Kshirod Prasad Barua, Sub-Deputy Collector, Goalundo, Faridpur, is allowed leave on average pay, under rule 81 (*b*) (*ii*) of the Fundamental Rules, from the 2nd January to the 15th February 1935, inclusive.

POLICE.

No. 25A. — 2nd January 1935. — Mr. W. A. B. Price, I.P., Superintendent of Police, is allowed leave on half average pay for three days, under rule 81 (*d*) of the Fundamental Rules, in extension of the leave granted to him under the orders of the 6th November 1933.

E. N. BLANDY,
Chief Secy. to the Govt. of Bengal (offg.).

POLITICAL DEPARTMENT.

Political.

NOTIFICATION.

No. 158P.—8th January 1935.—In exercise of the power conferred by sub-section (*2*) of section 1 of the Bengal Suppression of Terrorist Outrages Act, 1932 (Ben. Act XII of 1932), the Governor in Council is pleased to extend, with effect from the 10th day of January 1935, all the provisions of Chapter I of the said Act to the following areas in Bengal, namely:—

The districts of Rajshahi, Dinajpur and Bogra in the Rajshahi Division.

E. N. BLANDY,
Chief Secy. to the Govt. of Bengal (offg.).

Special.

NOTIFICATION.

No. 56X.—10th January 1935.—Whereas in the opinion of the Government of Bengal there are reasonable grounds for believing that Babu Pabitra Mohan Roy *alias* Nani Gopal Roy *alias* P. S. Roy *alias* Nani Da, son of Babu Mokshoda Mohan Roy, of village Sekharnagore (Uttarhati), police-station Serajdikhan, in the district of Dacca, is a person in respect of whom an order may lawfully be made under sub-section (*1*) of section 2 of the Bengal Criminal Law Amendment Act, 1930; and

Whereas the Governor in Council on the 6th June 1934 in exercise of the powers conferred by the said section 2 was pleased to order the said Babu Pabitra Mohan Roy *alias* Nani Gopal Roy *alias* P. S. Roy *alias* Nani Da to be committed to custody in the nearest District or Central Jail, and the arrest without warrant of the said Babu Pabitra Mohan Roy *alias* Nani Gopal Roy *alias* P. S. Roy *alias* Nani Da at any place where he might be found by any police officer with a view to his commitment to custody; and

Whereas the said Babu Pabitra Mohan Roy *alias* Nani Gopal Roy *alias* P. S. Roy *alias* Nani Da has not been arrested and the said order under section 2 of the said Act has not been served personally on the said person, and whereas due diligence has in the opinion of the Local Government been exercised to effect such personal service;

Now, therefore, the Governor in Council in exercise of the powers conferred by sub-section (*2*) of section 3 of the Bengal Criminal Law Amendment Act, 1930, is pleased to direct the said Babu Pabitra Mohan Roy *alias* Nani Gopal Roy *alias* P. S. Roy *alias* Nani Da, son of Babu Mokshoda Mohan Roy, of village Sekharnagore (Uttarhati), police-station Serajdikhan, in the district of Dacca, to appear before the Superintendent of Police, Dacca, at Dacca, on or before the 9th day of March 1935 for the purpose of receiving the aforesaid order.

Notification No. 46277X., dated the 22nd November 1934, is hereby cancelled.

S. N. ROY,
Addl. Secy. to the Govt. of Bengal.

POLICE DEPARTMENT.

NOTIFICATIONS.

Bakarganj - Faridpur.—No. 7155 Pl.—31st December 1934.—In exercise of the power conferred by section 4 (*1*) (*s*) of the Code of Criminal Procedure, 1898 (Act V of 1898), and in modification of all previous notifications published in the *Calcutta Gazette* relating to the area included in the Hizla police-station in the district of Bakarganj and to the boundaries of that area, the Governor in Council is pleased to declare that the villages specified in the following schedule, which have hitherto been included in that police-station, shall be included in the Goshairhat police-station in the district of Faridpur:—

Schedule.

Names of villages.	General jurisdiction list number of thana Mehendiganj.
Char Madaria	513
Char Maijhari	514

Faridpur.—No. 7192Pl. — 22nd December 1934.—In exercise of the power conferred by section 2 of the Bengal Public Gambling Act, 1867 (Bengal Act II of 1867), the Governor in Council is pleased to extend all the sections of the said Act (except section 13, which already applies) to the whole of the mauzas mentioned below within the Kalkini police-station in the Madaripur subdivision of the Faridpur district:—

Name of mauzas.	Jurisdiction list number of thana Madaripur.
Gopalpur ...	285
South Gopalpur ...	269
East Khanduly ...	260
Puali Madaripur ...	268

Calcutta-Howrah.—No. 68Pl.—5th January 1935.—The following draft of an amendment, which, in exercise of the powers conferred by sub-section (*1*) of section 71 of the Calcutta Hackney-carriage Act, 1919 (Bengal Act No. I of 1919), the Governor in Council proposes to make in the by-laws published under notification No. 1084 M., dated the 31st March 1920, at pages 163 to 172 of Part III of the *Calcutta Gazette* of the 7th April 1920, as amended by notifications No. 3130Pl., dated the 24th November 1923, No. 3677Pl., dated the 2nd September 1929, No. 871Pl., dated the 27th February 1933 and No. 2503Pl., dated the 16th May 1933, is hereby published for the information of persons likely to be affected thereby.

2. The draft will be taken into consideration on or after the 10th February 1935, and any objection or suggestion received by the undersigned with regard thereto before that date will be duly considered:—

Draft amendment.

After by-law 13 of the said by-laws, *insert* the following new by-law, namely:—

"13A. The Registering Officer shall not register any rickshaw intended to be kept or used in Calcutta, including the suburbs and the Municipality of Howrah, if he considers that there are already an adequate number of rickshaws being kept for use or in use in Calcutta and its suburbs including the Municipality of Howrah."

E. N. BLANDY,
Chief Secy. to the Govt. of Bengal (offg.).

Calcutta Police Notifications.

The 2nd January 1935.

The following draft of a notification, which, with the previous sanction of the Governor in Council, the Commissioner of Police, Calcutta, proposes to issue under section 62 (*1*) (*b*) and (*f*) of the Calcutta Police Act, 1866 (Bengal Act IV of 1866), and section 39 (*1*) (*b*) and (*f*) of the Calcutta Suburban Police Act, 1866 (Bengal Act II of 1866), is hereby published for the information of persons likely to be affected thereby.

2. The draft will be taken into consideration on or after the 10th February 1935, and any objection or suggestion received by the undersigned by that date will be duly considered :—

Draft Notification.

In exercise of the powers conferred by clauses (*b*) and (*f*) of sub-section (*1*) of section 62 of the Calcutta Police Act, 1866 (Bengal Act IV of 1866), and clauses (*b*) and (*f*) of sub-section (*1*) of section 39 of the Calcutta Suburban Police Act, 1866 (Bengal Act II of 1866), the Commissioner of Police, Calcutta, with the previous sanction of the Governor in Council proposes to make the following amendment to the rules for the regulation of processions in Part III of the Rules for the Regulation of Traffic in Calcutta and Suburbs, 1931, published under Calcutta Police notification No. 134, dated the 6th January 1932, at pages 37-99, Part I of the *Calcutta Gazette*, dated the 14th January 1932 :—

Amendment.

Under heading (*a*)—Ordinary processions with music :—

Delete rules 7 and 8 at page 43 of the rules.

Insert the existing rules 7 and 8 as conditions (*i*) and (*j*) under rule 2 of the same rules.

In License Form (A) at page 65 of the rules *insert* the following after condition 8 as conditions 9 and 10 :—

Condition 9.—The holder of a license shall be bound to obey all reasonable directions he may receive from the police officers accompanying the procession.

Condition 10.—Every license-holder shall be responsible for the peaceful behaviour of all the persons composing his procession, and, in the event of any riotous or disorderly conduct on the part of the members composing such procession, any police officer not below the rank of head constable may, should he think fit, at once withdraw such license by verbal order and all persons composing such assembly or procession shall immediately disperse.

No.

		Fee.	Rupees.
Fee for Police—			
European Sergeants ..	..	at Rs.	each
Head Constables ..	..	at Rs.	,,
Constables ..	..	at Rs.	,,

Received Rupees only.

Pass Clerk.

Office of the Commissioner of Police, Calcutta.

$\frac{Town}{Suburbs}$ *of Calcutta.*

License is hereby granted under the provisions of
Section 62 of the Calcutta Police Act, 1866.
Section 39 of the Calcutta Suburban Police Act, 1866.

The day of 19

To

for a Procession with Music to pass with musicians from

Street to Street within the $\frac{Town}{Suburbs}$ of Calcutta

proceeding *via*

only

between the hours of M. and M. of the 19

upon the conditions stated on the reverse.

Police section.

Pass Clerk.

Deputy Commissioner of Police.

Conditions.

(*a*) The holder of a license shall, before making use of it, register it at the police section named herein.

(*b*) No musical instrument shall be sounded by any person taking part in the procession for which a license is granted except in the streets therein specified and during the hours specified in the license, and not more than the specified number of musicians shall be employed or take part in such procession.

(*c*) All music shall cease in the neighbourhood of hospitals and of churches, mosques, temples or other places of worship during the time of public worship.

(*d*) The processions shall pass only by the streets specified in the license.

(*e*) The holder of the license shall make use of the same only on the day and during the precise hours for which it is granted.

(*f*) The procession shall always pass by the left side of the street.

(*g*) The members of the procession shall not carry sticks, clubs or other offensive weapons.

(*h*) No fire shall be carried, nor fire-works or blank cartridges discharged during the course of the procession.

(*i*) The holder of a license shall be bound to obey all reasonable directions he may receive from the police officers accompanying the procession.

(*j*) Every license-holder shall be responsible for the peaceful behaviour of all the persons composing his procession, and, in the event of any riotous or disorderly conduct on the part of the members composing such procession, any police officer not below the rank of head constable may, should he think fit, at once withdraw such license by verbal order and all persons composing such assembly or procession shall immediately disperse.

N.B.—Every person contravening any of the conditions of this license is liable to arrest by the police and on conviction to a fine of fifty rupees.

The following draft of a notification, which, with the previous sanction of the Governor in Council, the Commissioner of Police, Calcutta, proposes to issue under section 62 (*1*) (*b*) and (*f*) of the Calcutta Police Act, 1866 (Bengal Act IV of 1866), and section 39 (*1*) (*b*) and (*f*) of the Calcutta Suburban Police Act, 1866 (Bengal Act II of 1866), is hereby published for the information of persons likely to be affected thereby.

2. The draft will be taken into consideration on or after the 10th February 1935, and any objection or suggestion received by the undersigned by that date will be duly considered:—

Draft Notification.

In exercise of the powers conferred by clauses (*b*) and (*f*) of sub-section (*1*) of section 62 of the Calcutta Police Act, 1866 (Bengal Act IV of 1866), and clauses (*b*) and (*f*) of sub-section (*1*) of section 39 of the Calcutta Suburban Police Act, 1866 (Bengal Act II of 1866), the Commissioner of Police, Calcutta, with the previous sanction of the Governor in Council proposes to make the following amendment to the rules for the regulation of processions in Part III of the Rules for the Regulation of Traffic in Calcutta and Suburbs, 1931, published under Calcutta Police notification No. 134, dated the 6th January 1932, at pages 37-99, Part I of the *Calcutta Gazette*, dated the 14th January 1932:—

Amendment.

Under heading (*c*)—Processions on account of the Muhammadan festival of the Mohurrum, in rule (*1*), *insert* the following condition as—

(*b*) "No music shall be played in any of the streets or thoroughfares in the town and suburbs of Calcutta except on the streets and thoroughfares and on the day and between the hours specified in this license."

Re-number the rest as (*c*), (*d*), etc.

In condition (*b*) (re-numbered as *c*) *add* the following sentence:—

"Such sanction shall be produced when required by any police officer."

In condition (*c*) (re-numbered as *d*) (1) *insert* the words "disobedience of lawful police orders or" after the words "in the event of any";

In condition (*e*) (re-numbered as *f*) *insert* the following after the word "weapon":—

"or let off or throw any fire-work within the limits of the town or suburbs of Calcutta."

Insert the following as new conditions:—

(*i*) "The licensee shall, at the direction of the police officer in charge of the procession, so regulate the conduct of the procession that the immersion ceremony at Karbala or arrival at the Darga shall be completed by the procession not later than the hour specified in this license in column 5 on the reverse".

(*j*) "Notwithstanding anything contained in the license, the licensee and the processionists shall at all times obey promptly lawful orders of the police officer in charge of the Akhara or procession".

(*k*) "Any person violating any of the above rules or any of the rules or conditions set forth in any sanction or license or otherwise behaving in a disorderly way or making a disturbance of any kind will be immediately arrested and dealt with according to law".

Office of the Commissioner of Police, Calcutta.

License, under the provisions of the Police Act, is hereby granted to.....of..... to take a Mohurrum procession with music on the dates, places and hours set out below.

The conditions under which this license is granted are given on the reverse hereof.

Calcutta,

Inspector,

The 193 . *Pass Department.* *Dy. Commissioner of Police.*

Day of Mohurrum.	Date.	Route.	Hour procession shall start.	Hour procession shall finish by.
1	2	3	4	5

Conditions.

1. All music shall cease in the neighbourhood of hospitals and of churches, temples, or other places of worship during the time of public worship.

2. No music shall be played in any of the streets or thoroughfares in the town and suburbs of Calcutta except on the streets and thoroughfares and on the day and between the hours specified in this license.

3. Sanction to carry a taboot, tajia or punja shall be granted to a Muhammadan only; and no person shall in any street erect or carry about a taboot, tajia or punja except with the sanction in writing of the Commissioner of Police. Such sanction shall be produced when required by any police officer.

4. The licensee shall be responsible for the peaceful behaviour of all the persons composing his procession and, in the event of any disobedience of lawful police orders or riotous or disorderly conduct on the part of the members composing such procession, any police officer not below the rank of head constable, may, should he think fit, at once withdraw such license by verbal order and all persons composing such assembly or procession shall immediately disperse.

5. Two or more taboots, tajias or punjas shall not be carried abreast on any street and when two processions bearing taboots, tajias or punjas meet, the members of each procession shall keep to the left side of the street.

6. No persons taking part in any procession or otherwise attending or being connected with any procession shall carry a sword, club or other offensive weapon or let off or throw any fire-work within the limits of the town or suburbs of Calcutta.

7. No tajia shall be over 13 feet in height.

8. The licensee shall, before making use of this license, register it at the police section named herein.

9. The licensee shall, at the direction of the police officer in charge of the procession, so regulate the conduct of the procession that the immersion ceremony at Karbala or arrival at the Darga shall be completed by the procession not later than the hour specified in this license in column 5 on the reverse.

10. Notwithstanding anything contained in the license, the licensee and the processionists shall at all times obey promptly lawful orders of the police officer in charge of the Akhara or procession.

11. Any person violating any of the above rules or any of the rules or conditions set forth in any sanction or license or otherwise behaving in a disorderly way or making a disturbance of any kind will be immediately arrested and dealt with according to law.

L. H. COLSON,

Commissioner of Police, Calcutta.

JUDICIAL DEPARTMENT.

No. 38A.

Powers.

Nadia. — No. 15133A. — 24th December 1934.—In exercise of the powers conferred by sub-section (*1*) of section 164 of the Code of Criminal Procedure, 1898 (Act V of 1898), the Governor in Council is pleased to empower Maulvi Musharaff Husain, a Sub-Deputy Magistrate, also a Magistrate of the second class at Chuadanga in the district of Nadia, to record any statement or confession made to him in the course of an investigation under Chapter XIV of the said Code or at any time afterwards before the commencement of enquiry or trial.

E. N. BLANDY,
Chief Secy. to the Govt. of Bengal (offg.).

Appointments and Transfers.

24-Parganas.—No. 9856J.—24th December 1934.—In exercise of the powers conferred by sections 14 and 15 and the proviso to section 357 of the Code of Criminal Procedure, 1898 (Act V of 1898), the Governor in Council is pleased—

(*a*) to confer upon Muhammad K. Chand the powers of a Magistrate of the third class, in the district of the 24-Parganas, for a period of three years from the date of this notification,

(*b*) to direct him to sit as a member of the Khardah bench in the said district, and

(*c*) to direct him to take down evidence in the English language.

Dinajpur.—No. 9858J.—24th December 1934.—In exercise of the powers conferred by sections 14 and 15 and the proviso to section 357 of the Code of Criminal Procedure, 1898 (Act V of 1898), the Governor in Council is pleased—

(*a*) to confer upon each of the gentlemen named below the powers of a Magistrate of the third class, in the district of Dinajpur, for a period of three years from the date of this notification,

(*b*) to direct him to sit as a member of the Balurghat bench in the said district, and

(*c*) to direct him to take down evidence in the English language—

Babu Sripal Bahadur Singh.

Babu Atulya Dhan Bagchi.

Howrah. — No. 9862J. — 24th December 1934.—In exercise of the powers conferred by sections 14 and 15 and the proviso to section 357 of the Code of Criminal Procedure, 1898 (Act V of 1898), the Governor in Council is pleased—

(*a*) to confer upon Babu Kanai Lal Basu Mallik the powers of a Magistrate of the second class, in the district of Howrah, for a period of three years from the 26th January 1935, in respect to such cases as may be made over to him within the limits of the Uluberia subdivision of the said district,

(*b*) to direct that he shall, in addition to sitting singly, sit as a member of the Uluberia bench in the said district, and

(*c*) to direct him to take down evidence in the English language.

24-Parganas. — No. 37J. — 2nd January 1935.—In exercise of the powers conferred by sections 14 and 15 and the proviso to section 357 of the Code of Criminal Procedure, 1898 (Act V of 1898), the Governor in Council is pleased—

(*a*) to confer upon Mr. Kakey S. Colah the powers of a Magistrate of the first class, in the district of the 24-Parganas, for a period of three years from the 30th January 1935, in respect to such cases as may be made over to him within the limits of the jurisdiction of the Sealdah Police Court,

(*b*) to direct that he shall, in addition to sitting singly, sit as a member of the Sealdah bench in the said district, and

(*c*) to direct him to take down evidence in the English language.

24-Parganas. — No. 39J. — 2nd January 1935.—In exercise of the powers conferred by sections 14 and 15 and the proviso to section 357 of the Code of Criminal Procedure, 1898 (Act V of 1898), the Governor in Council is pleased—

(*a*) to confer upon Maulvi Syed Zainuddin Hossain the powers of a Magistrate of the second class, in the district of the 24-Parganas, for a period of three years from the 30th Janaury 1935, in respect to such cases as may be made over to him within the limits of the jurisdiction of the Sealdah Police Court,

(*b*) to direct that he shall, in addition to sitting singly, sit as a member of the Sealdah bench in the said district, and

(*c*) to direct him to take down evidence in the English language.

Leave.

Mymensingh.—No. 9864J.—24th December 1934.—Babu Subodh Chandra Datta, Subordinate Judge and Assistant Sessions Judge of Mymensingh, is allowed leave on average pay for four days from the 2nd January 1935, under rules 81 (*b*) (*ii*) and 82 (*b*) of the Fundamental Rules.

No. 9871J.—24th December 1934.—Babu Pashupati Mukharji, Subordinate Judge and Assistant Sessions Judge, is allowed leave on average pay for four months, on medical certificate, from the 23rd December 1934, under the proviso to rule 81 (*b*) (*ii*) of the Fundamental Rules, in extension of the leave already granted to him.

No. 41J.—3rd January 1935.—Babu Ram Lal Banarji, officiating Subordinate Judge, is allowed leave on average pay for one month and four days, under rules 81 (*b*) (*ii*) and 82 (*b*) of the Fundamental Rules, in extension of the leave already granted to him.

Powers.

Pabna-Bogra.—No. 9860J.—24th December 1934.—Babu Rabindra Kumar Datta Gupta, munsif of Bogra, in the district of Pabna and Bogra, is vested with powers to exercise final jurisdiction in the trial of suits for the recovery of rent under section 153 (*b*) of the Bengal Tenancy Act, VIII of 1885.

Chittagong - 24 - Parganas - Dinajpur.—No. 9867J.—24th December 1934.—Each of the officers named below is vested with powers to exercise final jurisdiction in the trial of suits for the recovery of rent under section 153 (*b*) of the Bengal Tenancy Act, VIII of 1885:—

Babu Pushpita Ranjan Mukharji, munsif, Patiya, Chittagong.

Babu Prasad Chandra Banarji, munsif, Sealdah, 24-Parganas.

Babu Nages Chandra Chakrabatti, munsif, Satkania, Chittagong.

Maulvi Azizul Islam, munsif, Dinajpur (Sadar).

Maulvi Mahtabuddin Ahmad, munsif, Cox's Bazar, Chittagong.

Mymensingh-Noakhali. — No. 32J. — 2nd January 1935.—In exercise of the power conferred by sub-section (*1*) of section 388 of the Indian Succession Act, 1925 (XXXIX of 1925), the Governor in Council is pleased to invest each of the munsifs named below with the functions of a District Judge within the local limits of the munsifi mentioned against him:—

Babu Birendra Narayan Ray, munsif, Iswarganj, Mymensingh—Iswarganj munsifi.

Babu Sudhir Chandra Datta, munsif, Sandwip, Noakhali—Sandwip munsifi.

Babu Kali Prasanna Piplai, munsif, Lakshmipur, Noakhali—Lakshmipur munsifi.

NOTIFICATIONS.

Burdwan. — No. 9784J. — 24th December 1934.—In exercise of the power conferred by section 65 of the Bengal Village Self-Government Act, 1919 (Bengal Act V of 1919), the Governor in Council is pleased to appoint Babu Kamala Kanta De, a member of the Amadpur union board within the Memari police-station in the Sadar subdivision of the Burdwan district, to be, during his term of office as such member, a member of the union bench within the jurisdiction of the said union board for the purposes of that section, *vice* Babu Abhay Pada Chaudhuri, deceased.

Burdwan. — No. 9785J. — 24th December 1934.—In exercise of the power conferred by section 73 of the Bengal Village Self-Government Act, 1919 (Bengal Act V of 1919), the Governor in Council is pleased to appoint Babu Kamala Kanta De, a member of the Amadpur union board within the Memari police-station in the Sadar subdivision of the Burdwan district, to be, during his term of office as such member, a member of the union court within the jurisdiction of the said union board for the purposes of that section, *vice* Babu Abhay Pada Chaudhuri, deceased.

Bakarganj - Faridpur. — No. 1J. — 2nd January 1935.—In exercise of the power conferred by sub-section (*1*) of section 13 of the Bengal, Agra and Assam Civil Courts Act, 1887 (XII of 1887), the Governor in Council is pleased to declare that the villages specified in the following schedule should henceforth be excluded from the local limits of the Barisal Sadar munsifi and included within the local limits of the Chikandi munsifi in the district of Faridpur:—

Schedule.

Name of villages.	General jurisdiction list number of thana Mehendiganj.
Char Madaria ...	... 513
Char Maijhari ...	... 514

T. J. Y. ROXBURGH,
Secy. to the Govt. of Bengal (offg.).

LOCAL SELF-GOVERNMENT DEPARTMENT.

NOTIFICATIONS.

Minister-in-charge: The Hon'ble Sir Bijoy Prasad Singh Roy, Kt.

Nadia.—No. 39M.—3rd January 1935.—The following draft of by-laws, which has been framed by the Commissioners of the Kushtia Municipality, in the district of Nadia, under section 355 of Bengal Municipal Act, 1932 (Bengal Act XV of 1932), and which the Government of Bengal (Ministry of Local Self-Government) propose to confirm under section 506 of the Act, is published for the information of persons likely to be affected thereby.

2. The draft will be taken into consideration on the 15th March 1935, and any objection or suggestion received by the undersigned through the District Magistrate before that date will be duly considered:—

Draft By-laws.

Definition.

1. In these by-laws the word "channel" shall include "*nala*," "river," "stream," "ditch," or "watercourse."

Penalty.

2. *Fines.*—The penalty for the infringement of any of these by-laws shall be—

(*a*) a fine not exceeding the sum stated at the foot of the by-law,

(*b*) in the case of a second or subsequent conviction for a similar offence, a fine not exceeding the sum (if any) stated in that behalf at the foot of the by-law, and

(*c*) in the case of a continuing offence, a further fine, not exceeding the sum (if any) stated at the foot of the by-law as the daily fine, which daily fine may be imposed for each day after written notice of the offence from the Commissioners.

3. *Setting up obstruction.*—No person shall, without the general or special permission of the Commissioners, set up any obstruction in any channel which is a source of public water-supply.

Explanation.—The spreading of fishing nets and the placing of fishing-traps in any such channel are included in the word "obstruction" as used in this by-law.

Fine, Rs. 10; daily fine, Rs. 2.

4. *Easing oneself.*—No person shall ease himself at the side of or into any channel.

Fine, Rs. 10.

5. *Throwing rubbish, sewage or offensive matter.*—No person shall throw, deposit or discharge any rubbish, sewage or offensive matter into any channel, tank or well.

Fine, Rs. 10; on a second or subsequent conviction, Rs. 50.

6. *Cleanliness of banks, and access for conservancy.*—Every owner or occupier of any part of the bank of any channel which is a source of public water-supply shall—

(*a*) keep such bank free from filth, dense vegetation and other obstruction, and

(*b*) at all times allow the Commissioners, or any of their servants duly authorized, in this behalf, to have access to such channel for any purpose of public conservancy.

Fine, Rs. 10.

7. *Weeds.*—Any person taking weeds from a channel or tank shall completely remove them from the slope and crest of such channel or tank within three days.

Fine, Rs. 10; daily fine, Rs. 2.

8. *Masonry platforms and drains for wells.*—The owner of every well which is a source of public water-supply shall construct a masonry platform and drains to prevent the surface water falling into the well or stagnating in its vicinity.

Fine, Rs. 10; daily fine, Rs. 2.

9. *Bathing or washing near well or standpipe.*—No person shall bathe, or shall wash clothes, utensils, or any other article, within a distance of ten feet from the lowest platform of any well, pump, standpipe or hydrant.

Fine, Rs. 10.

10. *Use of standpipes and fountains.*—Except with the general or special permission of the Commissioners and under such conditions as they may from time to time prescribe; no person shall use any standpipe, pump, hydrant or fountain belonging to the Commissioners for any purpose other than drawing water—

(*a*) for drinking on the spot, or

(*b*) for carrying away for domestic purposes.

Fine, Rs. 10.

11. No person shall put his mouth to any tap or cock attached to any standpipe or hydrant used by the public.

Fine, Rs. 10.

12. No person shall cause damage to any hydrant, standpipe, pump, fountain, water-tap, or cock belonging to the Commissioners or tamper with any of their property connected with the waterworks in such a manner as to affect the use of public water-supply.

Fine, Rs. 20.

13. No person suffering from leprosy or any other contagious disease shall touch or draw water from any standpipe used by the public.

Fine, Rs. 20.

14. *Steeping jute, hemp, etc.*—No person shall, without the general or special permission of the Commissioners, steep in any tank or channel any jute, hemp or other vegetable matter which is likely to render the water offensive or noxious to the neighbourhood.

Fine, Rs. 10; on a second or subsequent conviction, Rs. 50.

15. *Washing infected articles.*—No person shall wash or cause to be washed in or near any tank or channel or any other receptacle for water used by the public for drinking or bathing purposes any clothes, bedding or other articles which have been used by a person suffering from any infectious or contagious disease.

Fine, Rs. 50.

16. *Bathing by infected perons.*—No person suffering from any infectious or contagious disease shall bathe in any public bathing place.

Fine, Rs. 10.

17. *Bathing places reserved for females.*—No male person above twelve years of age shall stand on or near, or bathe or wash in, any bathing place which has been reserved by the Commissioners at a meeting for the use of females only.

Fine, Rs. 10.

18. *Cattle troughs.*—No person shall use for any other purpose any drinking trough which has been reserved by the Commissioners for watering cattle.

Murshidabad. — No. 45M. — 3rd January 1935.—In exercise of the power conferred by section 58 (*2*) of the Bengal Municipal Act, 1932 (Bengal Act XV of 1932), the Government of Bengal (Ministry of Local Self-Government) are pleased to appoint Mr. Man Singh, Executive Engineer, Nadia Rivers Division, to be a Commissioner of the Berhampore Municipality in the district of Murshidabad, *vice* Babu Sarat Chandra Bhattacharji, deceased.

No. 111L.S.-G.—4th January 1935.—In exercise of the power conferred by section 16 of the Bengal Motor Vehicles Tax Act, 1932 (Bengal Act I of 1932), the Government of Bengal (Ministry of Local Self-Government) are pleased to exempt motor cars belonging to the following officers:—

(*i*) General Staff Officer, second grade, Presidency and Assam District,
(*ii*) D. A. A. and Q. M. G., Presidency and Assam District,
(*iii*) Staff Captain "A," Presidency and Assam District,
(*iv*) Staff Captain, Presidency and Assam District, Calcutta,
(*v*) Staff Captain "Q," Presidency and Assam District,
(*vi*) General Staff Officer III, Presidency and Assam District,

from payment of tax under the said Act, subject to the provisions of rule 19.

2. This cancels notification No. 4909-L.S.-G., dated the 10th October 1934.

Burdwan.—No. 115M.—4th January 1935.—In exercise of the power conferred by section 415 of the Bengal Municipal Act, 1932 (Bengal Act XV of 1932), the Government of Bengal (Ministry of Local Self-Government) are pleased to extend the provisions of that section to the Katwa Municipality in the district of Burdwan.

G. S. DUTT,
Secy. to the Govt. of Bengal.

Public Health.

NOTIFICATION.

Minister-in-charge: The Hon'ble Sir Bijoy Prasad Singh Roy, Kt.

Dacca.—No. 11P.H.—4th January 1935.—In exercise of the power conferred by section 311 of the Bengal Municipal Act, 1932 (Bengal Act XV of 1932), the Government of Bengal (Ministry of Public Health) are pleased to make the following additional rule in the house connection rules of the Dacca Municipality, which were published under notification No. 302T.M., dated the 27th May 1913, as subsequently amended:—

Draft rule.

17A. No cistern, tank or reservoir of any description, which is intended to be supplied with water from the municipal waterworks, shall be permitted to any holding except with the sanction of the commissioners in meeting, and such sanction shall distinctly specify the dimensions and capacity of the cistern, tank or reservior allowed. The inlet to every such cistern, tank or reservoir must be controlled by an efficient ballcock so that the discharge thereinto is completely stopped when the cistern, tank or reservoir is full. The ballcock cistern and taps fed from it will count together as one tap for the purpose of rule 15.

H. R. WILKINSON,
Secy. to the Govt. of Bengal.

EDUCATION DEPARTMENT.

NOTIFICATIONS.

Darjeeling. — No. 1Edn. — 2nd January 1935.—Mr. H. M. Baillie, Middle School Master, Victoria Boys' School, Kurseong, is allowed leave on half average pay with effect from the 10th March 1935, or any subsequent date on which he avails himself of it, under rule 81 (*d*) of the Fundamental Rules, in combination with the winter vacation of the school for the year 1935-36, under rule 82 (*d*) of those rules.

Darjeeling. — No. 4Edn. — 2nd January 1935.—Mr. V. C. Prins, History Master, Victoria Boys' School, Kurseong, is allowed leave for eight months with effect from the 1st April 1935, or any subsequent date on which he avails himself of it, viz., leave on average pay out of India, Ceylon or Nepal for such period as together with the winter vacation of the school for 1935-36 shall not exceed eight months, under the proviso to rule 81 (*b*) (*ii*) of the Fundamental Rules, and leave on half average pay for the remaining period, under rule 81 (*d*) of the same rule, in combination with the said vacation, under rule 82 (*d*) of those rules.

Minister-in-charge: The Hon'ble Khan Bahadur M. Azizul Haque.

Calcutta.—No. 7Edn.—2nd January 1935.—Babu Nares Chandra Ghosh, Professor, Presidency College, Calcutta, is allowed leave on half average pay for six months, with effect from the 2nd November 1934, under rule 81 (*d*) of the Fundamental Rules, in extension of the leave already granted to him.

Calcutta.—No. 9Edn.—2nd January 1935.—Dr. Panchanan Neogi, Professor, Presidency College, Calcutta, is allowed leave on average pay for the period from the 21st November to the 22nd December 1934 (both days inclusive), under rules 81 (*b*) (*i*) and 82 (*b*) of the Fundamental Rules.

Calcutta - Jessore. — No. 12Edn. — 2nd January 1935.—Maulvi Zahid Ali Khan, Assistant Master, Anglo-Persian Department, Calcutta Madrasah, now officiating Assistant Head Master, Jessore Zilla School, is appointed to act in the Bengal Educational Service as Head Master of the school with effect from the date on which he joins the appointment, during the absence, on leave, of Babu Tulsidas Banerji, or until further orders.

Registration.

NOTIFICATIONS.

Minister-in-charge: The Hon'ble Khan Bahadur M. Azizul Haque.

Tippera. — No. 1 Regn. — 2nd January 1935.—In exercise of the power conferred by section 3 of the Bengal Muhammadan

Marriages and Divorces Registration Act, 1876 (Bengal Act 1 of 1876), the Government of Bengal (Ministry of Education) are pleased to appoint Maulvi Syed Abu Yusuf Muhammad Yaqub to be a Muhammadan Registrar within the police-station of Homna, in the district of Tippera.

Tippera. — No. 2 Regn. — 2nd January 1935.—In exercise of the power conferred by section 2 of the Kazis' Act, 1880 (Act XII of 1880), the Government of Bengal (Ministry of Education) are pleased to appoint Maulvi Syed Abu Yusuf Muhammad Yaqub to be the Kazi for the celebration of marriages and the performance of other rites and ceremonies within the police-station of Homna, in the district of Tippera.

Bakarganj.—No. 7 Regn.—2nd January 1935.—In exercise of the power conferred by section 3 of the Bengal Muhammadan Marriages and Divorces Registration Act, 1876 (Bengal Act I of 1876), the Government of Bengal (Ministry of Education) are pleased to appoint Maulvi A. B. Muhammad Nurul Haq, temporarily to be a Muhammadan Registrar within the chaukidari unions Nos. XIII-XXI of police-station Amtali, in the district of Bakarganj, or until further orders.

Bakarganj.—No. 8 Regn.—2nd January 1935.—In exercise of the power conferred by section 2 of the Kazis' Act, 1880 (Act XII of 1880), the Government of Bengal (Ministry of Education) are pleased to appoint Maulvi A. B. Muhammad Nurul Haq temporarily to be the Kazi for the celebration of marriages and the performance of other rites and ceremonies within the chaukidari unions Nos. XIII-XXI of police-station Amtali in the district of Bakarganj, or until further orders.

Rangpur. — No. 13Regn. — 2nd January 1935.—Maulvi Mir Syed Ali, District Sub-Registrar of Rangpur, is allowed leave on average pay for four days from the 2nd January 1935, under rule 81 (*b*) (*ii*) of the Fundamental Rules.

Khulna.—No. 16Regn.—2nd January 1935. —Maulvi Saleh Ahmed, District Sub-Registrar of Khulna, is allowed leave on average pay for four days from the 2nd January 1935, under rule 81 (*b*) (*ii*) of the Fundamental Rules.

Rangpur.—No. 19 Regn.—2nd January 1935.—In exercise of the power conferred by section 3 of the Bengal Muhammadan Marriages and Divorces Registration Act, 1876 (Bengal Act I of 1876), the Government of Bengal (Ministry of Education) are pleased to appoint Maulvi Abdul Jabbar Rabbani to be a Muhammadan Registrar within the police-station of Kurigram, in the district of Rangpur.

Rangpur.—No. 20 Regn.—2nd January 1935.—In exercise of the power conferred by section 2 of the Kazis' Act, 1880 (Act XII of 1880), the Government of Bengal (Ministry of Education) are pleased to appoint Maulvi Abdul Jabbar Rabbani to be the Kazi for the celebration of marriages and the performance of other rites and ceremonies within the police-station of Kurigram, in the district of Rangpur.

Rangpur.—No. 25 Regn.—2nd January 1935.—In exercise of the power conferred by section 3 of the Bengal Muhammadan Marriages and Divorces Registration Act, 1876 (Bengal Act I of 1876), the Government of Bengal (Ministry of Education) are pleased to appoint Maulvi Shah Muhammad Abdul Wajed to be a Muhammadan Registrar within the police-station of Chilmari, in the district of Rangpur.

Rangpur.—No. 26 Regn.—2nd January 1935.—In exercise of the power conferred by section 2 of the Kazis' Act, 1880 (Act XII of 1880), the Government of Bengal (Ministry of Education) are pleased to appoint Maulvi Shah Muhammad Abdul Wajed to be the Kazi for the celebration of marriages and the performance of other rites and ceremonies within the police-station of Chilmari, in the district of Rangpur.

Tippera.—No. 31Regn.—2nd January 1935. Maulvi Shahabuddin Muhammad Mahmud, District Sub-Registrar of Tippera, is allowed leave on average pay for five days, with effect from the 2nd January 1935, under rule 81 (*b*) (*ii*) of the Fundamental Rules.

H. R. WILKINSON,
Secy. to the Govt. of Bengal.

COMMERCE DEPARTMENT.

NOTIFICATIONS.

No. 129Com.—1st January 1935.—In exercise of the power conferred by the first proviso to sub-section (*1*) of section 45 of the Factories Act, 1934 (XXV of 1934), the Governor in Council is pleased to vary the limits laid down in clause (*b*) of the said sub-section so as to permit women employed in the jute mills in the membership of the Indian Jute Mills Association to work between the hours of 5-30 a.m. and 6-30 p.m. from the 1st to 8th January 1935, both days inclusive.

No. 1Com.—2nd January 1935.—Mr. G. Robertson, Manager, Union South Mill, is appointed, under sub-section (*4*) of section 4 of the Bengal Smoke Nuisances Act, 1905, to represent the Bengal Chamber of Commerce on the Bengal Smoke Nuisances Commission, *vice* Mr. T. Lorimer, resigned.

Certificate of Approval.

No. 76Com.—4th January 1935.—With reference to rule 7 of the rules issued by the Government of India with their resolution No. 7552—7581-121, dated the 15th September 1913, for regulating the grant by Local Governments of licences to prospect for minerals and the grant of mining leases in British India, it is hereby certified that Mr. E. F. O. Murray, Mining Engineer, Tatanagar, Bengal Nagpur Railway, is approved by the Government of Bengal as a fit and proper person to whom such licences or leases can be granted in the Presidency of Bengal.

2. Under rule 8 of the aforesaid rules this certificate will expire at midnight on the 31st of December 1935.

D. GLADDING,
Secy. to the Govt. of Bengal.

FINANCE DEPARTMENT.

Audit.

CORRIGENDUM.

No. 57F.—2nd January 1935.—The following correction, which has been authorised, is published for general information :—

Bengal Financial Rules, 1st Edition (Reprint), 1930.

Page 337—Form No. 21.—Substitute the following for Form No. 21 :—

Bengal Form No. 4814.
Misc. P. W. Accts. Indent List No. 57A.

Account of receipts, issues and balances at site of_____

Description of materials	Bricks.	Surki.	Lime.												Total.	
Unit	% 0	% c. ft.	% c. ft.												Rs.	a.
Estimated quantity of materials ..																
Estimated value																
Quantity brought forward																
TRANSACTIONS.																
Receipts during the month																
Total receipts during the month ..																
Total receipts to date carried over ..																
Issues brought forward																
Issues during the month																
Total issues during the month ..																
Total issues to date carried over (a) ..																
Paper balances of unused materials (b) ..																
Actual balances after verification (c) ..																
Differences (b—c) ..																
*Materials required as calculated by authorised formulæ from the quantities of work as executed (d)																
Differences (a—d) ..																

*This check is to be exercised only on the completion of a work and a difference revealed by this test should be investigated and adjusted on the lines set out in paragraph 359 (b) of the P. W. A. Code.

DATED_____,

*The*_____ *19*

Dated initials of the Dvl. Accountant. *Dated initials of the Sub-Dvl. Officer.* *Dated initials of the Dvl. Officer.*

D. GLADDING,
Secy. to the Govt. of Bengal.

PUBLIC WORKS DEPARTMENT.

Establishment.

NOTIFICATIONS.

Minister-in-charge: The Hon'ble Nawab K. G. M. Faroqui, Khan Bahadur.

No. 130.—22nd December 1934.—Mr. H. A. Keatinge, officiating Executive Engineer, Darjeeling Division in the Northern Circle, is, on relief by Mr. A. H. Nunn, transferred in the interest of the public service to the Chittagong Division in the Eastern Circle and appointed to officiate as Executive Engineer of that Division until further orders, *vice* Mr. R. L. Hui, Executive Engineer, to proceed on leave on medical grounds.

2. This supersedes this department notification No. 120, dated 29th November 1934.

No. 131.—22nd December 1934.—This department notification No. 121, dated the 29th November 1934, transferring Babu Nagendra Chandra Das Gupta, Assistant Engineer, from the Chittagong Division in the Eastern Circle, is hereby cancelled.

J. D. V. HODGE,

Secy. to the Govt. of Bengal.

DEPARTMENT OF AGRICULTURE AND INDUSTRIES.

Forests.

Orders by the Conservator of Forests, Bengal.

Buxa.—No. 29For.—3rd January 1935.—Mr. S. J. Curtis, Deputy Conservator of Forests in charge of the Buxa Division, is posted to the charge of the Kumargram Duar Subdivision of the Buxa Division in addition to his own duties, with effect from the forenoon of the 21st November 1934.

Buxa.—No. 32 For.—3rd January 1935.—Babu Samson Sitling, Extra Assistant Conservator of Forests, is granted leave on average pay for two months and six days, under rule 81 (*b*) (*ii*) of the Fundamental and Subsidiary Rules, with effect from the 26th November 1934, with permission to prefix Sunday, the 25th November 1934, to the leave.

E. O. SHEBBEARE,

Conservator of Forests, Bengal.

REVENUE DEPARTMENT.

Land Acquisition.

NOTIFICATION.

Burdwan.—No. 13848L.A.—22nd December 1934.—Whereas it appears to the Governor in Council that land is likely to be required to be taken by Government at the public expense for a public purpose, viz., for a brickfield in the 3rd mile of Burdwan-Arambag Road, in the village of Chak-Purohit, jurisdiction list No. 1, thana Rayna, pargana Khandghosh, district Burdwan, it is hereby notified that for the above purpose a piece of land comprising cadastral survey plot Nos. 3, 4, 9 and 69-92 and measuring, more or less, 9·70 acres, is likely to be required within the aforesaid village of Chak-Purohit.

This notification is made, under the provisions of section 4 of Act I of 1894, to all whom it may concern.

A plan of the land may be inspected in the office of the Special Land Acquisition Officer, Burdwan, as well as in that of the Executive Engineer, Burdwan Division, at Hooghly.

In exercise of the powers conferred by the aforesaid section, the Governor in Council is pleased to authorise the officers for the time being engaged in the undertaking, with their servants and workmen, to enter upon and survey the land and do all other acts required or permitted by that section.

In exercise of the powers conferred by section 17(*4*) of the Land Acquisition Act, I of 1894, as amended by act XXXVIII of 1923, the Governor in Council is pleased to direct that the provisions of section 5A of the Act shall not apply in this case.

Excise.

NOTIFICATIONS.

Minister-in-charge: The Hon'ble Sir Bijoy Prasad Singh Roy, Kt.

No. 911Ex.—24th December 1934.—In exercise of the power conferred by section 27 of the Bengal Excise Act, 1909 (Bengal Act V of 1909), the Government of Bengal (Ministry of Excise) are pleased to make, with effect from the 1st January 1935, the following amendments in the table contained in paragraph 26 of notification No. 596S.R., dated the 30th March 1915, as subsequently amended:—

At the end of clause 2 after the word "boundary" under the head "Jalpaiguri" in the first column of the said table showing "area," *insert* the following:—

"and the area served by the Tentulia shop on the west of the Teesta."

No. 913Ex.—24th December 1934.—In exercise of the power conferred by section 86 of the Bengal Excise Act, 1909 (Bengal Act V of 1909), the Government of Bengal (Ministry of Excise) are pleased to make, with effect from the 1st January 1935, the following amendments in the table under rule 245 of the rules published under notification No. 601-S.R., dated the 30th March 1915, as subsequently amended:—

At the end of clause 2 after the word "boundary" under the head "Jalpaiguri" in the first column of the said table showing "area," *insert* the following:—

"and the area served by the Tentulia shop on the west of the Teesta."

O. M. MARTIN,
Secy. to the Govt. of Bengal.

BOARD OF REVENUE, BENGAL.

NOTIFICATION.

24-Parganas.—No. 19162C.P.—22nd December 1934.—In exercise of the powers conferred by clause 2 of section 8 of the Bengal Land Revenue (Assistant Collectors) Regulation, 1821 (IV of 1821), the Board of Revenue authorises Babu Haridas Mazumdhar, Settlement Kanungo, who has been placed on duty in connection with the maintenance, for the purposes of section 158A of the Bengal Tenancy Act, 1885, of the record-of-rights of the estate of Babu Sarat Chandra Mitra in the district of 24-Parganas, to exercise and perform within the local limits of the said estate any of the powers and duties vested in the Collectors of Land Revenue under any enactment in force therein for the purpose of the said work of maintenance of the record-of-rights.

M. O. CARTER,
Secy. to the Board of Revenue, Bengal.

TREASURY NOTICES.

Jessore, the 15th December 1934.

Uncovenanted Deputy Collector Babu Girish Chandra Das has been placed in executive charge of the Jessore Treasury with effect from the afternoon of the 14th December 1934 and is authorised to draw bills on other treasuries.

Jessore, the 2nd January 1935.

Uncovenanted Deputy Collector Babu Sukumar Chatterjee has been placed in executive charge of the Jessore Treasury with effect from the forenoon of the 2nd January 1935 and is authorised to draw bills on other treasuries.

N. K. SEN, *Collector.*

ORDERS BY COMMISSIONERS OF DIVISIONS.

Burdwan Division—Chinsura.

No. 7M.—3rd January 1935.—It is hereby notified for general information that, under rule 20 (*b*) of the manual of rules for the management of charitable hospitals and dispensaries in Bengal, the following gentlemen are appointed to be members of the committee for the management of the charitable dispensary at Baidyabati in the district of Hooghly:—

Babu Nirmal Chandra Ghosh, Chairman of the Baidyabati Municipality.

Babu Nirmal Chandra Mukherjee, Vice-Chairman of the Baidyabati Municipality.

Babu Monindra Nath Mukherjee.

Babu Chandi Charan Kundu.

Dr. Syama Prosanna Gupta, L.M.S.

Babu Paresh Nath Mukherjee.

Babu Manmatha Nath Patra.

Dr. Narendra Nath Ghosh, M.B.

Dr. Bejoy Basanta Banerjee, L.M.F.

Babu Aswini Kumar Banerjee.

Babu Upendra Nath Banerjee.

Babu Sadananda Pyne.

No. 12M.—3rd January 1935.—It is hereby notified for general information that, under rule 20 (*b*) of the manual of rules for the management of charitable hospitals and dispensaries in Bengal, the following gentlemen are appointed to be members of the committee for the management of the charitable dispensary at Lillooah in the district of Howrah:—

The Subdivisional Officer, Howrah.

The Chairman, Bally Municipality.

The Vice-Chairman, Bally Municipality.

The District Medical Officer, East Indian Railway, Lillooah.

Mr. Banku Behari Ghose.

Mr. Golam Kibria Mullick.

Mr. Ashutosh Bhattacharjee.

Mr. A. Currim.

Dr. Hemanta Kumar Chatterjee.

Rai Sahib Kali Krista Bhadra.

Dr. Jatindra Nath Kumar.

Mr. Atahar Ali Biswas.

No. 15M.—3rd January 1935.—It is hereby notified for general information that, under rule 20 (*b*) of the manual of rules for the management of charitable hospitals and dispensaries in Bengal, the following gentlemen are appointed to be members of the committee for the management of the Beam's Charitable Dispensary at Bally in the district of Howrah:—

The Subdivisional Officer, Howrah.
The Vice-Chairman, Howrah district board.
Dr. Phanindra Nath Ghosal.
Mr. Sambhu Nath Banerjee.
Mr. Bhabataran Ganguly.
Mr. Kalipada Mukherjee.
Mr. Harendra Nath Chatterjee.
Dr. Atindra Nath Dutt.
Mr. Ramaprasad Mukherjee.
Mr. Abani Mohan Mukherjee.
Rai Sahib Debendra Nath Mukherjee.
Mr. Hari Nath Mukherjee.

L. B. BURROWS, *Commissioner (offg.).*

Dacca Division—Dacca.

Orders by the Deputy Inspector-General of Police, Dacca Range.

Dacca.—No. 4331.—20th December 1934.—Babu Jitendra Mohan Dhar, Inspector, District Intelligence Branch, Dacca, is granted leave on average pay for 1 month and 15 days with effect from the 2nd January 1935. He is permitted to prefix to his leave Sunday, the 23rd December 1934, and the gazetted holidays from the 24th December 1934 to the 1st January 1935.

Babu Bibhuti Bhushan Shaha, officiating Inspector, District Intelligence Branch, Mymensingh, is transferred to the District Intelligence Branch, Dacca, to fill a temporary post sanctioned in Government Order No. 195Pl.S., dated the 4th April 1934.

The transfer is effected in the interests of public service.

R. M. WRIGHT,
Deputy Inspector-General of Police.

Presidency Division—Calcutta.

No. 2264M.—22nd December 1934.—In exercise of the powers conferred by sub-section (*3*) of section 145 of the Bengal Municipal Act, 1932 (Bengal Act XV of 1932), I hereby authorise the Commissioners of the Santipur Municipality in the district of Nadia to appoint Babu Nrisinha Prosad Khan, being a person approved by me, to prepare the valuation and assessment list of the municipality.

No. 2990R.G.—22nd December 1934.—Babu Upendra Chandra Narayan Chaudhury, Sub-Deputy Collector, Calcutta Collectorate, is granted an extension of leave on average pay up to 1st December 1934, under rule 81 (*b*) (*ii*) of the Fundamental Rules, in continuation of this office notification No. 2268R.G., dated the 26th September 1934.

No. 3008R.G.—29th December 1934.—Babu Narendra Nath Mukherjee, Sub-Deputy Collector, is posted to Khulna as Stamp Inspector.

No. 3014R.G.—29th December 1934.—Babu Purna Chandra Sen, Sub-Deputy Collector and Stamp Inspector, Khulna, is transferred to Nadia Sadar as Circle Officer.

No. 3023R.G.—30th December 1934.—This office notification No. 2937R.G., dated the 19th December 1934, posting Babu Surendra Nath Sen Gupta, No. I, Sub-Deputy Collector and Stamp Inspector, Jessore, to Kandi, Murshidabad, is cancelled.

No. 3030R.G.—30th December 1934.—This office notification No. 2930R.G., dated the 19th December 1934, posting Babu Birendra Nath Maitra, Sub-Deputy Collector, Kandi, Murshidabad, to Jessore as Stamp Inspector, is cancelled.

No. 3037R.G.—31st December 1934.—Maulvi Din Mohamed, Sub-Deputy Collector, Bongaon (Jessore), is posted to the Sadar station of the district of the 24-Parganas on general duty.

No. 3045R.G.—31st December 1934.—Babu Satyendra Nath Das Gupta, Sub-Deputy Collector, is posted to the Sadar station of the 24-Parganas district on general duty.

H. J. TWYNAM, *Commissioner.*

Bengal Marwari Association Constituency of the Legislative Assembly.

Calcutta, the 30th December 1934.

Both Babu Baijnath Bajoria, who was elected a member of the Legislative Assembly at the last general election by the Bengal Marwari Association constituency, and Mr. L. P. Poddar, who was not elected, lodged with me on the 18th and 20th December 1934, respectively, their returns of election expenses with the declarations under sub-rule (*3*) of rule 19 of the Legislative Assembly Electoral Rules. The returns and the declarations may be inspected at my office at 134, Machuabazar Street, Calcutta, between the hours of 1 and 4 p.m. on working days from the date of this notice to the 15th January 1935, on payment of a fee of one rupee.

J. N. BANERJEE, *Personal Assistant to the Secretary, Bengal Marwari Association, and the other person authorised to perform the functions of Returning Officer.*

Notice under rule 19 (5) of the Legislative Assembly Electoral Rules.

The 29th December 1934.

The undermentioned candidate, who has been elected to the Legislative Assembly from the Burdwan and Presidency Divisions (Muhammadan) Constituency, has lodged a return of election expenses on the date mentioned against his name. The return and the declaration may be inspected in the office of the Commissioner, Presidency Division, at

3, Charnock Place, Calcutta, during office hours on payment of a fee of rupee one only.

Name of candidate.	Date on which return was lodged with the Returning Officer.
Sir Abdulla Suhrawardy, Kt.	27th December 1934.

H. J. TWYNAM, *Commissioner, Presidency Division (Returning Officer).*

Notice under rule 19 (5) of the Legislative Assembly Electoral Rules.

The 3rd January 1935.

The undermentioned candidate, who has been elected to the Legislative Assembly from the Presidency Division (Non-Muhammadan) Constituency, has lodged a return of election expenses on the date mentioned against his name. The return and the declaration may be inspected in the office of the Commissioner, Presidency Division, at 3, Charnock Place, Calcutta, during office hours on payment of a fee of rupee one only—

Name of candidate.	Date on which return was lodged with the Returning Officer.
Babu Lakshmi Kanta Maitra	2nd January 1935.

H. J. TWYNAM, *Commissioner, Presidency Division (Returning Officer).*

Orders by the Deputy Inspector-General of Police, Presidency Range.

Calcutta.—No. 8987-88.—22nd December 1934.—Babu Ramendra Nath Nandi, officiating Inspector, will continue to act as Inspector, *vice* Babu Kshirod Chandra Ghosh, Inspector, Jessore, retired on 16-11-1934, a.m.

Babu Nirendra Lal Mitra, Inspector, Jessore, is granted 4 months' leave on average pay, under rule 81 (*b*) (*ii*) of the Fundamental Rules with effect from the 2nd January 1935. He is permitted to prefix to his leave Sunday, the 23rd December 1934, and the gazetted holidays from the 24th December 1934 to the 1st January 1935.

Sub-Inspector Muhammad Fakir Chand of Murshidabad is appointed to act as Inspector in the vacancy.

The transfer is sanctioned in the interests of public service.

Babu Ban Bihari Sanyal, Inspector, Khulna, is granted 4 months' leave on average pay, under rule 81 (*b*) (*ii*) of the Fundamental Rules with effect from the 1st January 1935.

Babu Sudhamadhab Pathak, officiating Inspector, 24-Parganas, will act in the above vacancy. The transfer is made in the interests of public service.

Sub-Inspector Brajendra Lal Banarji of the 24-Parganas is appointed to act as Inspector, *vice* Rai Sahib Rangin Lal Ghosh, Inspector, 24-Parganas, placed under suspension.

Babu Rebati Gopal Biswas, officiating Inspector, Khulna, is granted 3 months' leave on average pay under rule 81 (*b*) (*ii*) of the Fundamental Rules with effect from the 2nd January 1935. He is permitted to prefix to his leave Sunday, the 23rd December 1934, and the gazetted holidays from the 24th December 1934 to the 1st January 1935.

Sub-Inspector Anil Ratan Banarji of Khulna is appointed to act as Inspector in the vacancy.

L. H. BURTON,
Deputy Inspector-General of Police.

Rajshahi Division—Jalpaiguri.

No. 4425J.—29th December 1934.—Khan Sahib Kazi Fazlul Karim, Sub-Deputy Collector, Rajshahi Division, is posted to Balurghat subdivision of Dinajpur district to work as 2nd Officer.

The posting is made in the public interest.

No. 18J.—2nd January 1935.—Mr. S. G. Macdonald, Sub-Deputy Collector, Rajshahi, is allowed leave on average pay for six weeks, with effect from the 5th November 1934, under rule 81 (*b*) (*ii*) of the Fundamental Rules.

F. W. ROBERTSON, *Commissioner.*

Malda, the 22nd November 1934.

Under rule 32A of the election rules under the Local Self-Government Act, it is notified for general information that the 7th February 1935 and the 9th February 1935 have been fixed for the general election of members for the Malda local board in the following thanas:—

Name of thana.	Number of members.
English Bazar-Bholahat	... 1
Kaliachak	... 1
Manikchak-Ratua	... 1
Shibganj-Kaliachak	... 1
Shibganj	... 1
Nawabganj	... 1
Nachole-Gomastapur	... 1
Malda-Habibpur	... 1
Gazole-Bamongola	... 1
Kharba	... 1
Harischandrapur	... 1
Ratua	... 1

J. N. TALUKDAR, *District Magistrate.*

Orders by the Deputy Inspector-General of Police, Rajshahi Range.

Jalpaiguri.—No. 8434.—21st December 1934.—Babu Panchanan Das, Inspector, Pabna, is granted 1 month's leave on average pay, on medical certificate, under rule 81 (*b*) (*ii*) of the Fundamental Rules, in extension of the leave already granted to him.

F. P. WALKER,
Deputy Inspector-General of Police.

Registered No. C207

The Calcutta Gazette

THURSDAY, JANUARY 10, 1935.

PART IA

Orders and Notifications by the Government of India republished for general information.

LEGISLATIVE DEPARTMENT.

NOTIFICATIONS.

New Delhi, the 19th December 1934.

No. F. 303/34-C. & G.—Mr. B. N. Rau, C.I.E., I.C.S., is appointed as Additional Joint Secretary and Draftsman to the Government of India in the Legislative Department with effect from 9th December 1934.

No. F. 303/34-C. & G.—Mr. B. N. Rau, C.I.E., I.C.S., Additional Joint Secretary and Draftsman to the Government of India in the Legislative Department, is appointed to officiate as Joint Secretary and Draftsman to the Government of India in that Department, with effect from the 2nd January 1935, during the absence on leave of Mr. J. Bartley, I.C.S., or until further orders.

G. H. SPENCE,

Secy. to the Govt. of India (offg.).

INDIAN AUDIT DEPARTMENT.

NOTIFICATION.

LEAVE AND APPOINTMENTS.

New Delhi, the 15th December 1934.

No. 3197-G. B. E./169-34.—The following events in the Indian Audit Department are notified:—

(1) Mr. E. T. Coates, I.C.S., officiated in Class I of Accountants-General from the 5th October 1934 to the 18th October 1934, both days inclusive.

• • • •

E. BURDON,

Auditor General in India.

DEPARTMENT OF COMMERCE.

NOTIFICATIONS.

ECCLESIASTICAL.

New Delhi, the 22nd December 1934.

No. 11 (21)-Eccl.—The services of the Reverend G. Buchanan, M.A., Second Chaplain, St. Andrew's Church, Bombay, are placed at the disposal of the Government of Bengal, for employment as Second Chaplain, St. Andrew's Church, Calcutta, with effect from the date on which he relinquished charge of his duties at Bombay.

H. Bow,
Joint Secy. to the Govt. of India.

TARIFFS.

New Delhi, the 22nd December 1934.

No. 139-T. (11).—In pursuance of sub-section (3) of section 1 of the Indian Tariff Act, 1934 (XXXII of 1934), the Governor-General in Council is pleased to appoint the 1st January 1935 as the date on which the said Act shall come into force.

T. A. STEWART,
Secy. to the Govt of India.

DEPARTMENT OF INDUSTRIES AND LABOUR.

NOTIFICATION.

New Delhi, the 18th December 1934.

No. L.-3033.—The following draft of certain further amendments to the Workmen's Compensation Rules, 1924, which the Governor-General in Council proposes to make in exercise of the powers conferred by section 32 of the Workmen's Compensation Act, 1923 (VIII of 1923), is published, as required by section 34 of the said Act, for the information of persons likely to be affected thereby, and notice is hereby given that the said draft will be taken into consideration on or after the 22nd March 1935. Any objection or suggestion which may be received in respect of the draft before the date specified will be considered by the Governor-General in Council:—

Draft amendments.

1. To rule 10 of the said Rules the following marginal heading shall be added, namely:—

"Investment of money."

2. To rule 11 of the said Rules the following marginal heading shall be added, namely:—

"Report of fatal accidents."

3. In sub-rule (*1*) of rule 11-A of the said Rules—

(i) In the marginal heading, for the words "notice given" the words "information received" shall be substituted;

(ii) for the words "to whom notice of an accident has been given" the words "who has received information of an accident" shall be substituted.

A. G. CLOW,
Joint Secy. to the Govt. of India.

Registered No. C207

The Calcutta Gazette

THURSDAY, JANUARY 10, 1935.

PART IB

Educational Notices.

Dacca Division.

Dacca, the 21st December 1934.

Award of Middle Scholarships, 1934.

(Each scholarship is of the value of Rs. 4 a month and is tenable for four years from the 1st January 1935.)

Dacca district.

Open scholarships.

No.	Name of scholarship-holder.	Name of school from which the candidate appeared.	Name of school in which the scholarship is tenable.
1	Samiruddin Ahmed	.. Narayanpur M. E.	.. Dacca Government Moslem H. E.
2	Md. Mearuddin	.. Kapasia D. B. R. S. M. E.	.. Nagari H. E.
3	Rasid Ahmed	.. Manipura M. E.	.. Adiabad Islamia H. E.
4	Nepal Chandra Dutta	.. Ghorasal M. E.	.. Kaliganj H. E.
5	Md. Keramat Ali	.. Khidirpur M. E.	.. Kishoreganj Azimuddin H. E.
6	Becharam Chattopadhyaya	.. Nabagram M. E.	.. Manikganj H. E.
7	Mukunda Behari Biswas	.. Berash M. E.	.. Sabhar H. E.
8	Narayan Chandra Saha Roy	.. Singair M. E.	.. Manikganj H. E.
9	Ali Akbar Choudhury	.. Joypara M. E.	.. Nawabganj H. E.

Scholarships reserved for Muhammadans.

1	Ahmed Hossain	.. Manipura M. E.	.. Adiabad Islamia H. E.
2	Abul Hasnat Fakharuddin Muhammad.	Hatirdia M. E.	.. Charsindur H. E.
3	Hamisuddin Bhuia	.. Jampur Majhorchar M. E.	.. Murapara H. E.
4	Md. Mozaffar Ali	.. Chalakchar M. V.	.. Lakhpur Simulia H. E.

Scholarships reserved for backward classes.

1	Haridas Bhoumick	.. Toperbari M. E.	.. Maishamura H. E.
2	Dhananjoy Biswas	.. Pirijkandi M. E.	.. Bhairab H. E.

Mymensingh district.

Open scholarships.

No.	Name of scholarship-holder.	Name of school from which the candidate appeared.	Name of school in which scholarship is tenable.
1	Md. Habibar Rahman	Chatal Baghata M. E.	Mymensingh Zilla.
2	Jnanendra Mohon Chanda	Astadhar M. E.	Ditto.
3	Debendra Mohon Dey	Baghil M. E.	Tangail B. B. H. E.
4	Md. Rostom Ali	Govindapur M. E.	Mymensingh Zilla.
5	Monoranjan Bhattacherjee	Elashin M. E.	Santosh Jahnavi H. E.
6	Ganapati Dey	Baghil M. E.	Tangail B. B. H. E.
7	Khitindra Mohon Roy	Gavindapur M. E.	Mymensingh Zilla.
8	Kamakshya Charan Bhattacherji	Kishoreganj M. E.	Kishoreganj R.U. H. E.
9	Akshoy Kumar Das	Jangalbari M. E.	Ditto.
10	Nagendra Chandra Maitra	Birkashimnagar M. E.	Ditto.
11	Bhabatosh Chakraverty	Bajitpur M. E.	Bajitpur H. E.
12	Alimuddin Sarkar	Kokdahara M. E.	Tangail S. N. H. E.

Scholarships reserved for Muhammadans.

1	Matiar Rahman	Tatarkandi M. E.	Bajitpur H. E.
2	Khorshed Ali Dewan	Bhuapur Moslem M. E.	Mymensingh Zilla.
3	Md. Mijanur Rahman	Elashin M. E.	Santosh Jahnavi H. E.
4	Md. Imanuddin Bhuya	Agarpur M. V.	Kodalia H. E.
5	Md. Aftabuddin	Teligati M. E.	Netrakona Dutta H. E.
6	Muhammad Ali Mia	Arrahkumud M. E.	Ghior H. E.
7	Md. Alauddin Khan	Chatalbaghata M. E.	Mymensingh Zilla.
8	Abdul Hafez Talukder	Agarpur M. V.	Bhairab H. E.

Scholarships reserved for backward classes.

1	Profulla Chandra Biswas	Patuair M. E.	Kishoreganj Azimuddin H. E.
2	Kumud Chandra Talukdar	Teligati M. E.	Netrakona Dutta H. E.
3	Rangalal Das	Narandia M. E.	Tangail B. B. H. E.

Faridpur district.

Open scholarships.

1	Md. Abdur Rahman Biswas	Bagduly M. E.	Saraswati Institution, Calcutta.
2	Madhusudan Bhattacherjee	Brahmandi M. E.	Faridpur Zilla.
3	Jadav Chandra Sarkar	Amirabad M. E.	Ditto.
4	Shamsuddin Sheikh	Shibrampur M. E.	Ditto.
5	Shamsuddin Mia	Charnasirpur M. E.	Matbararchar H. E.
6	Anil Kumar Chakravarty	Bajunia M. E.	Gopalgunj S. N. H. E.

Scholarships reserved for Muhammadans.

1	Abdur Rahman Mia	Dutta Kendua M. E.	Bajitpur R. K. H. E.
2	Fazlur Rahman Mia	Damudya Moslem M. E.	Kartikpur H. E.
3	Abdul Hakim	Charbhoira Coronation M. E.	Sakhipur Islamia H. E.

Scholarships reserved for backward classes.

1	Jogesh Chandra Biswas	Sashikar M. E.	Madaripur H. E.

Bakarganj district.

Open scholarships.

1	Muhammad Abu Hussain	Daudpur M. E.	Perojpur Government H. E.
2	Prafulla Kumar Roy	Pirojpur Town M. E.	Ditto.
3	Dhirendra Nath Roy Choudhury	Maisani M. E.	Ditto.
4	Anilbaran Sinha	Kauria M. E.	Ponabalia H. E.
5	Mukunda Lal Chakravarty	Samudekati M. E.	Jalabari H. E.
6	Abdul Latif	Charboira M. V.	Patuakhali J. H. E.
7	John Binimay Barui	Padrishibpur M. E.	Bakarganj J. S. H. E.
8	Mohammad Anwar Ali	Dhulia M. E.	Barisal Zilla.

Scholarships reserved for Muhammadans.

1	Fariduddin Ahmed	Sukdev M. E.	Bhola Government H. E.
2	Md. Meheruddin	Badalpara M. E.	Barisal Zilla.
3	Asmat Ali	Shehakati M. V.	Patuakhali J. H. E.
4	Jafar Ali Khan	Narattompur M. E.	Banaripara H. E.

Scholarships reserved for backward classes.

1	Dwijendra Nath Howladar	Patharghata M. E.	Mathbaria H. E.
2	Harendra Nath Mandal	Daudpur M. E.	Bhandaria H. E.

N.B.—(*1*) The scholarships are tenable at a Normal School for two years.

(*2*) The scholarship-holders should join their schools within one month from the date of publication of the award in the *Calcutta Gazette*.

ABUL HASHEM KHAN CHAUDHURY,

Inspector of Schools, Dacca Division.

Presidency Division.

40-1A, Free School Street, Calcutta, 22nd December 1934.

The following candidates have passed the Primary (Maktab) Final Examination, 1934 :—

"E" indicates that the candidates have passed in English.

Roll No.	Name.	Division.
	District Jessore.	
	Jessore Centre.	
	Mohanpur Practising U. P.	
2	Anil Kumar Bose (E)	II
3	Dhirendra Nath Haldar	I
4	Anil Kumar Haldar (E)	I
	Rupdia U. P.	
5	Ranjit Kumar Banerjee (E)	II
	Banshuri West U. P.	
6	Kartic Chandra Datta (E)	I
7	Haripada Datta (E)	II
	Solakhada U. P.	
8	Amulya Ratan Ray (E)	I
9	Bijit Kumar Dhar (E)	II
	Churamonkati U. P.	
10	Raj Kumar Paul (E)	I
	Jessore Practising U. P.	
11	Bimal Krishna Ray (E)	II
	Panchakasi U. P.	
13	Ranjan Kumar De (E)	I
14	Sachindra Nath Karmakar (E)	I
	Dabunagar U. P.	
16	Sakti Pada Sarkar (E)	II
17	Anadi Kumar Mitra (E)	II
18	Gouranga Prosad Ghosh (E)	I
	Dhakuria U. P.	
19	Tinkari Paul (E)	I
20	Kalipada Biswas (E)	I
	Chhatiantala U. P.	
24	Saroj Kumar Majumdar (E)	II
26	Nirmal Chandra Neogi (E)	II
	Ghurulia Board U. P.	
27	Haripada Pramanik (E)	II
	Tasuapara U. P.	
28	Sudhir Kumar Sen (E)	I
29	Prafulla Kumar Das (E)	I
30	Atul Chandra Das (E)	II
31	Nirmal Kumar Haldar (E)	I
	Pratapkati U. P.	
32	Sudhir Kumar Das (E)	II
33	Srimati Urmilabala Debi	I
34	Durga Rani Debi	I
	Toilkupi U. P.	
36	Sukesh Chandra Ghosh (E)	I
37	Hazari Lall Datta	I
	Daulatpur Mission U. P.	
39	Nripendra Kumar Ghosh (E)	II
40	Susil Kumar Ghosh (E)	II
	Mohanganj U. P.	
42	Kalidas Biswas (E)	I
43	Deb Prosad Mitra (E)	I
	Joypur U. P.	
44	Baidya Nath Kundu (E)	I
	Matsia Board U. P.	
46	Kalipada Datta (E)	I
	Jafarpur Board U. P.	
47	Amal Kanti Sar (E)	I
48	Radha Pada Sar (E)	I
49	Ramesh Chandra Das (E)	I
50	Kalipada Sar (E)	I
51	Panchanan Sar (E)	I
	Hod U. P.	
52	Ajit Kumar Rudra (E)	I
	Bankra U. P.	
53	Renuka Basu (E)	I
54	Ramesh Chandra Goswami (E)	II
	Ujjalpur U. P.	
56	Jatindra Nath Ghosh (E)	I
	Jagadanandakati U. P.	
58	Nirapada Bit (E)	I
	Gopsena Circle U. P.	
60	Sukumar Ghosh (E)	II
	Sabhorpara U. P.	
62	Sachi Nath Biswas (E)	I
63	Ranjit Kumar Kar (E)	I
	Kabilpur U. P.	
64	Jnanendra Nath Karmakar (E)	I
	Pancharoi U. P.	
65	Badal Chandra Ghosh (E)	I
	Mahakal U. P.	
66	Hazari Lall Ghosh (E)	I
	Nengrahat Maktab	
68	Pulin Bihari Ghosh (E).	I
	Joypur Maktab.	
69	Hazari Lal Roy (E)	II
	Hazrakati Maktab.	
71	Nityananda Paul (E)	II
	Kachua Maktab.	
74	Kiron Chandra Chowdhury (E)	I
	Sagardari Circle U. P.	
75	Sudhir Kumar Banerjee (E)	I
76	Nonigopal Mukherjee (E)	I
	Noali U. P.	
77	Balaram Halder (E)	II

Roll No.	Name.	Division.
	Dohakula U. P.	
79	Sarat Chandra Singha ..	II
	Dogachia U. P.	
83	Bimal Chandra Roy (E) ..	II
84	Satya Ranjan Sardar (E) ..	II
	Pachbaria U. P.	
85	Amulya Ratan Biswas (E) ..	I
86	Satish Chandra Biswas (E) ..	I
88	Bhagirath Roy (E) ..	I
89	Pulin Behari Mallik (E) ..	I
	Poradanga U. P.	
90	Kiran Chandra Dafadar ..	II
92	Nalini Kanta Mandal ..	II
	Hazirhat U. P.	
94	Santosh Kumar Biswas (E) ..	I
95	Amulya Ratan Mallik (E) ..	I
	Sultannagar U. P.	
97	Lakshmikanta Biswas ..	I
	Khojarhat U. P.	
98	Nagendranath Byapari ..	II
	Joypur U. P.	
99	Bhanu Das Roy (E) ..	I
	Chapakona U. P.	
100	Kalipada Mandal (E) ..	I
101	Hajari Lal Mandal ..	I
	Kharichadanga U. P.	
102	Rajendra Nath Mandal ..	II
103	Gour Chandra Biswas (E) ..	II
	Matikomra Board U. P.	
106	Nani Gopal Mandal (E) ..	I
	Chingra U. P.	
110	Narayan Ch. Kar (E) ..	I
	Misridiara U. P.	
111	Anil Krishna Sarkar (E) ..	II
112	Nanda Lal Sarkar (E) ..	I
	Kakilakhali U. P.	
113	Kunja Behari Das (E) ..	I
114	Keshab Lal Das (E) ..	I
115	Balaram Das (E) ..	I
	Kabilpur U. P.	
116	Birendranath Das (E) ..	I
	Bagdanga U. P.	
117	Jonardan Sarkar (E) ..	I
	Noali U. P.	
124	Tarapada Nath (E) ..	II
	Uttarpara U. P.	
126	Akhiluddin Molla (E) ..	II
	Mahespur Practising U. P.	
129	Abdur Razzaq Mandal (E) ..	I
130	Lutfar Rahman Mandal (E) ..	I
131	Alek Mandal (E) ..	I

Roll No.	Name.	Division.
	Jomdia U. P.	
132	Basharatullah Mandal ..	I
133	Muhammad Husain Biswas ..	I
	Jessore Practising U. P.	
137	Md. Nural Huda (E) ..	I
	Dalannagore U. P.	
139	Abdul Hye Munshi (E) ..	I
141	Abul Husain Biswas (E) ..	II
	Balidha Board U. P.	
143	Md. Izzat Ali Fakir (E) ..	II
144	Md. Abdul Hamid Gazi (E) ..	II
	Sankharigati U. P.	
146	Abdul Bari Khan (E) ..	I
	Chinatala U. P.	
148	Abdul Hamid Daftari (E) ..	I
	Ghoralia Board U. P.	
149	Abu Taleb Biswas (E) ..	I
	Naherpara Board U. P.	
150	Moula Baksh Dafadar ..	II
	Sultannagore U. P.	
151	Md. Azharul Hoque ..	II
	Daulatpur Mission U. P.	
152	Md. Abdus Samad (E) ..	I
153	Md. Abdul Hamid Biswas (E) ..	I
154	Md. Ansarali Biswas (E) ..	I
	Khojarhat U. P.	
155	Md. Gholam Mian ..	II
156	Md. Afsar Ali ..	II
	Mahanganj U. P.	
160	Shamsuddin Shaikh (E) ..	II
	Joypur U. P.	
163	Akam Ali Biswas (E) ..	I
	Kharichadanga U. P.	
164	Md. Hares Ali Gazi (E) ..	I
	Matsia Board U. P.	
165	Raja Ali Sardar (E) ..	II
166	Saduruddin Biswas (E) ..	I
	Matikomra Board U. P.	
167	Gholam Husain Sardar (E) ..	I
	Sonakar Board U. P.	
169	Md. Mahiuddin (E) ..	I
	Raghunathpur U. P.	
172	Md. Abdul Bari (E) ..	I
	Bankura U. P.	
174	Iman Ali (E) ..	I
	Sonarpara U. P.	
178	Bazlar Rahman Sardar (E) ..	II

Roll No.	Name.	Division.
	Kayem Kola U. P.	
181	Md. Amir Hussain (E) ..	I
	Syodpur Maktab.	
185	Shaikh Md. Abu Bakar (E) ..	I
186	Md. Bashiar Rahman (E) ..	II
	Nayera Maktab.	
189	Md. Ameenuddin (E) ..	I
	Parala Maktab.	
191	Abul Khair Jamaluddin Ahmad (E) ..	I
	Gabukhali Maktab.	
192	Md. Joynal Abedin (E) ..	I
	Jhanpa U. P. Maktab.	
193	Md. Nesar Ali (E) ..	I
	Altapore Maktab.	
196	Md. Ismail ..	II
	Joypur Maktab.	
198	Shamsuddin Gazi (E) ..	II
199	Keramat Ali Biswas (E) ..	II
	Sannyasgacha Maktab.	
202	Md. Ansaruddin (E) ..	II
	Gourighona Maktab.	
203	Md. Nawabali (E) ..	II
	Madanpur Maktab.	
204	Md. Mansur Ali (E) ..	II
	Kasimnagore Maktab.	
206	Md. Husain Ali (E) ..	I
	Monoharpur Maktab.	
207	Abdul Jabbar (E) ..	I
	Pachakari Maktab.	
209	Md. Abdul Ghani ..	II
210	Khorshed Ali ..	II
	Hajrakati Maktab.	
211	Kazi Afraq Ahmad (E) ..	I
	Brahmandanga Maktab.	
213	Md. Wajed Ali (E) ..	I
	Bahrampur Maktab.	
215	Kaosar Ali (E) ..	I
	Bandaghat.	
216	Md. Izzat Ali (E) ..	I
217	Md. Mahiuddin (E) ..	I
	Baliadanga Khanpur Maktab.	
218	Shaikh Daliluddin (E) ..	I
219	Md. Mahtabuddin (E) ..	I
220	Md. Gholam Rahman (E) ..	I
	Panjia Maktab.	
223	Md. Nuruzzaman (E) ..	II
	Bagharpara Maktab.	
224	Noor Muhammad Mian (E) ..	II
225	Shamsur Rahman Mian (E) ..	II
226	Tabibar Rahman Biswas ..	I
227	Insanuddin Ahmad (E) ..	II
	Bagharpar Maktab.	
228	Aminuddin Biswas (E) ..	II
229	Khejer Ahamad (E) ..	II
	Digholia Maktab.	
232	Rastam Ali Molla (E) ..	I
	Bahadurpur Maktab.	
239	Md. Abdul Gaffar (E) ..	I
240	Md. Musa Khandakar (E) ..	I
	Monguljan Maktab.	
254	Md. Altaf Hussain (E) ..	I
255	Md. Sultan (E) ..	I
256	Gholam Ghafar (E) ..	I
257	Md. Nemejuddin (E) ..	I
258	Md. Mojahar Ali (E) ..	I
259	Md. Abdul Majid (E) ..	I
	Row town Maktab.	
260	Md. Habibar Rahman Biswas (E) ..	I
	Enayetpur Maktab.	
263	Md. Mojahar Ali (E) ..	I
264	Md. Matiar Rahman (E) ..	I
265	Md. Anwar Ali (E) ..	I
	Amdabad Maktab.	
267	Moksed Ali (E) ..	I
268	Ismail Hossain ..	I
	Bhawanipore U. P.	
270	Abdul Hai Mian (E) ..	I
271	Serajul Islam Mian (E) ..	I
	Bongaon Centre.	
	Ghatbaor Practising U. P.	
1	Dhruba Prasad Sinha (E) ..	I
2	Bijoy Gopal Pramanik (E) ..	I
4	Pankaj Kumer Mukhopadhyay (E) ..	I
	Bangaonbazar U. P.	
5	Gobindadas Mukhopadhyay (E) ..	I
7	Kalipada Chattopadhyay (E) ..	II
	Kaiba U. P.	
9	Kumari Ishanibala Pandey ..	I
	Baganchra U. P.	
10	Makhanlal Dutta (E) ..	II
	Samta U. P.	
12	Sudhir Kumer Bose (E) ..	I
13	Shiva Nath Karmakar (E) ..	I
	Fatepur U. P.	
16	Panchu Gopal Roy (E) ..	I
	Charuigachi U. P.	
17	Banoy Kumar Dutta ..	I

Roll No.	Name.	Division.
	Mahesha U. P.	
18	Krishnapada Hazra (E) ..	II
	Gaighata U. P.	
19	Nagendra Nath Ghosh ..	I
	Beara U. P.	
20A	Subal Chandra Ghose ..	I
	Ghatbaor Practising U. P.	
21	Gourdas Biswas (E) ..	I
22	Tarak Chandra Tarafdar (E) ..	I
	Bangaon U. P.	
24	Dulal Chandra Halder (E) ..	II
25	Gour Chandra Halder (E) ..	II
	Nutangram U. P.	
26	Ajit Kumer Mondal (E) ..	I
27	Dinabandhu Dafadar (E) ..	I
28	Jitendra Nath Biswas (E) ..	I
	Panchita U. P.	
29	Lakshman Chandra Mandal (E) ..	I
	Sindrani U. P.	
33	Subodh Kumer Mondal (E) ..	I
	Boyra U. P.	
34	Dhirendra Nath Shaha (E) ..	I
35	Gourhari Biswas (E) ..	I
	Kaiba U. P.	
38	Chandra Nath Biswas ..	II
	Fatepur U. P.	
40	Kalipada Dalal (E) ..	I
	Mahisa U. P.	
42	Hazarilal Sardar (E) ..	I
	Salkona U. P.	
43	Nepal Chandra Paroi (E) ..	I
	Ghatbaor Practising U. P.	
44	Mazaharali Mondal ..	II
45	Zarafat Husain Biswas ..	II
	Jhektipota Board U. P.	
47	Dabiruddin Sardar (E) ..	I
	Panchita U. P.	
48	Abdus Sobhan Shaik (E) ..	I
	Boyra U. P.	
50	Sirajuddin Ahmed (E) ..	I
	Bagdaha U. P.	
53	Abdul Ghani Biswas (E) ..	I
	Gantipara U. P.	
54	Abdus Samad Biswas (E) ..	I
	Boalia U. P.	
55	Maminuddin Ahmed (E) ..	I
	Dihi U. P.	
57	Rahimbaks Khan ..	II

Roll No.	Name.	Division.
	Lakshmanpur U. P.	
59	Md. Amirali Biswas (E) ..	I
	Basantapur U. P.	
60	Md. Azizur Rahman ..	II
	Bagachra U. P.	
61	Md. Karim Baksa (E) ..	II
	Samta U. P.	
62	Gholam Rahman Mandal (E) ..	II
	Jasavpur U. P.	
64	Md. Toakkel Husain Mandal (E) ..	I
	Charugachi U. P.	
65	Kutubuddin Mandal ..	I
	Boaldaha U. P.	
68	Abdul Hamid Mandal (E) ..	I
	Gaighata U. P.	
69	Din Mahammed Mandal ..	II
70	Md. Abdur Rahim ..	II
71	Md. Abdul Hamid ..	I
72	Amjad Husain ..	II
	Brithianchra U. P. Maktab.	
73	Abul Barakat (E) ..	I
	Goga U. P. Maktab.	
75	Md. Abul Husain Mandal (E) ..	I
	Sundarpur U. P. Maktab.	
77	Md. Abdul Wahab (E) ..	II
	Salkona U. P.	
79	Md. Anwar Ali Biswas (E) ..	I
	Beara U. P.	
83	Shaikh Amirul Islam ..	I
	Jhenidah Centre.	
	Mathanpur U. P.	
1	Amulya Kumar Mittra (E) ..	I
2	Harendra Nath Ghosh (E) ..	II
	Laksmandia U. P.	
7	Sudhir Chandra Mazumdar (E) ..	I
	Kamanna U. P.	
8	Srinibash Bhowmic (E) ..	I
	Dudsar Board.	
9	Anukul Chandra Chaki ..	II
	Bhowanipore U. P.	
10	Jitendra Nath Bhadra (E) ..	I
11	Sree Gopal Sen (E) ..	I
	Oushia U. P.	
12	Sukumar Chandra Dutta (E) ..	I
13	Binay Bhusan Dutta (E) ..	I
	Bagdanga U. P.	
15	Megh Nath Adhikari ..	II
17	Santosh Kumar Dey ..	II

Roll No.	Name.	Division.
	Kharikhali Board U. P.	
19	Sushil Kumer Mukherjee (E) ..	II
20	Uma Prosad Ganguly (E) ..	I
21	Bimola Nanda Roy (E) ..	II
	Kalicharanpur U. P.	
23	Shishir Kumer Ghosh (E) ..	II
	Abaipur U. P.	
25	Ranajit Kumer Sikdar (E) ..	I
26	Nimai Chand Kundu (E) ..	II
27	Sudhir Kumer Kundu (E) ..	II
28	Kumaresh Chandra Kundu (E) ..	II
	Bankri Maktab.	
32	Hrishikesh Majumdar ..	II
	Arpara U. P.	
37	Sudhir Chandra Biswas ..	II
	Oushia U. P.	
39	Gajendra Nath Roy (E) ..	I
40	Kiron Chandra Biswas (E) ..	II
	Bhowanipore U. P.	
41	Jagadish Chandra Biswas (E) ..	I
42	Broja Gopal Biswas (E) ..	I
	Bhowanipore Board U. P.	
46	Harendra Nath Saha (E) ..	II
	Ramchandrapur U. P.	
47	Sashanko Bhusan Biswas ..	II
	Badurgachha U. P.	
49	Nirapada Biswas ..	II
	Rotnatbagua U. P.	
51	Premtosh Biswas (E) ..	II
	Bhowanipore U. P.	
56	Abdul Jabbar Biswas (E) ..	I
57	Kansaruddin Biswas (E) ..	I
58	Elahi Baksh Biswas (E) ..	I
	Bhowanipore Board U. P.	
63	Munshi Azizar Rahman (E) ..	I
	Bhatbaria U. P.	
64	Md. Shamsur Ali Shaikh (E) ..	I
65	Md. Mobarek Ali Shaikh (E) ..	II
	Bishundia U. P.	
68	Ghulam Akbar Shah ..	II

Roll No.	Name.	Division.
	Umedpur Practising.	
69	Md. Azhar Ali (E) ..	II
72	Ghulam Sarwar Laskar (E) ..	I
	Khankhali Board.	
73	Fakir Md. Laskar ..	II
	Ramchandrapur U. P.	
75	Md. Akkas Ali Mian ..	II
	Haripur U. P.	
77	Md. Enad Ali ..	II
	Arpara U. P.	
81	Md. Mofizuddin Biswas ..	II
	Porahati U. P.	
82	Abul Khair Md. Afazuddin (E) ..	II
	Barokamarkunda U. P.	
83	Sultan Husain Joaddar ..	II
	Dudsar Board.	
84	Khorsed Ali Biswas ..	II
86	Ataur Ali Mondal ..	II
	Badurgachha U. P.	
87	Aftabuddin Biswas ..	II
88	Daem Ali Biswas ..	II
	Umedpur Practising.	
89	Gauhar Ali Mollah (E) ..	I
	Bagdanga U. P.	
90	Md. Mukhleswar Rahman Mollah (E) ..	II
	Rotnetbagura U. P.	
92	Mir Abdus Sattar (E) ..	I
93	Mir Reasat Ali (E) ..	I
	Mingram Maktab.	
97	Md. Yakub Ali (E) ..	I
98	Md. Mahatabuddin (E) ..	I
	Jhonjonia Maktab.	
101	Siddiq Ahmad (E) ..	II
102	Md. Yunus Ali (E) ..	II
	Surat Maktab.	
113	Md. Sayed Ali ..	II
114	Md. Luqman Ali ..	II
	Dohakoa Maktab.	
117	Md. Altaf Hossain (E) ..	I
118	Md. Belait Husain (E) ..	II
	Jalalpur Maktab.	
119	Md. Abdul Majid Laskar ..	I

Roll No.	Name.	Division.
	Magura Centre..	
	Magura Practising U. P.	
1	Sidheswar Chakravarty (E)	I
2	Manindra Nath Bose (E)	II
3	Harendra Nath Haldar (E)	I
4	Jitendra Nath Chakravarty (E)	II
6	Amulya Kumar Roy (E)	I
7	Tara Pada Karmakar (E)	I
	Atharakhadah U. P.	
9	Rama Nath Bhattacharjee (E)	I
	Bagura U. P.	
14	Harendra Nath Biswas (E)	II
	Srikole U. P.	
16	Subodh Chandra Roy (E)	I
17	Amiya Kumar Roy (E)	I
	Nandoali U. P.	
18	Shyam Sundar Nandi (E)	I
19	Haripada Dutta (E)	I
20	Santi Kumar Majumdar (E)	II
21	Biswanath Dasgupta (E)	I
	Goalbathan U. P.	
32	Gobinda Charan Bhattacharjee (E)	I
	Batajore U. P.	
35	Addyaita Kumar Chakraverty (E)	II
	Palashbaria U. P.	
39	Adhir Kumar Mitra (E)	II
	Chandra U. P.	
42	Bimal Chandra Chatterjee (E)	I
	Sabdalpur U. P.	
43	Khagendra Nath Mitra (E)	I
	Jogibarhat U. P.	
43A	Sushil Kumar Chandra (E)	I
	Hatdariapur Board U. P.	
44	Dhirendra Nath Shaha (E)	II
	Magura Practising U. P.	
45	Narendranath Biswas (E)	I
	Hatdariapur Board U. P.	
46	Prionath Das (E)	II
	Digha U. P.	
47	Rajendranath Sarkar (E)	II
	Dhuljhuri U. P.	
49	Birendranath Shaha (E)	II
50	Sudhirkumar Shaha (E)	I

Roll No.	Name.	Division.
	Nanduali U. P.	
51	Atulchandra Ray (E)	I
	Bagdanga U. P.	
53	Bilyadal Biswas (E)	I
	Bhabanhati U. P.	
55	Jitendra Nath Saha (E)	I
	Lakshmikanda U. P.	
58	Upendra Nath Biswas (E)	II
	Goalbathan U. P.	
60	Kalipada Das (E)	I
	Batajore U. P.	
61	Manimohan Paul (E)	II
	Baulia U. P.	
65	Provash Chandra Biswas (E)	II
	Araishat U. P.	
71	Jagat Chandra Biswas (E)	I
	Krishnapur U. P. in P. S. Salika.	
76	Jatindra Nath Biswas (E)	I
77	Gakul Chandra Biswas	II
78	Fanibhushan Biswas (E)	II
	Radhanagar U. P.	
79	Pramatha Nath Saha (E)	II
80	Jitendra Nath Saha (E)	I
81	Ranajit Kumar Saha (E)	I
82	Haripada Saha (E)	II
	Rampur U. P.	
87	Nirmal Prokash Biswas (E)	II
	Magura Practising U. P.	
92	Tabibar Rahaman Sekh (E)	II
	Hatdariapur Board U. P.	
93	Abul Hossen Biswas (E)	II
95	Rahenuddin Mia (E)	II
	Pulum U. P.	
98	Abdu Hak Molla (E)	II
	Dhuljuri U. P.	
103	Abdul Jalil Molla (E)	I
	Babukhali U. P.	
105	Kaji Abdur Rajjak	II
	Chowgachi U. P.	
107	Munshi Ashrafali (E)	I

Roll No.	Name.	Division.
	Batajore U. P.	
108	Ballakchand ..	II
	Palashbari U. P.	
109	Md. Hanif Molla (E) ..	I
	Kullia U. P.	
113	Md. Golam Rosul Molla (E) ..	I
	Darisalai U. P.	
117	Abdul Alim Munshi (E) ..	II
	Rajhat U. P.	
120	Ainuddin Biswas (E) ..	I
	Barisat U. P. Maktab.	
122	Md. Abdul Hai ..	II
	Hazrapur Maktab.	
127	Md. Hanif Biswas (E) ..	I
	Boradi Maktab.	
128	Quazi Joinuddin (E) ..	I
129	Shaikh Nurul Islam (E) ..	I
	Dewli Maktab.	
133	Serajul Huq Molla (E) ..	II
134	Golam Quddus Molla (E) ..	II
	Palla Maktab.	
138	Sadeq Ali Khandakar (E) ..	I
	Joka Maktab.	
139	Mujibar Rahman (E) ..	II
	Simakhali Larkee Maktab.	
143	Quazi Md. Abdul Khaleq (E) ..	II
144	Md. Moksed Ali (E) ..	II
	Narail Centre.	
	Rupganj Practising U. P.	
2	Kali Pada Chakraverty ..	I
3	Kalidas Banerjee ..	I
4	Rabindra Nath Bhowmick ..	I
	Singia Harrigora U. P.	
6	Prokashaditya Sen (E) ..	I
7	Kartick Ch. Bose (E) ..	I
	Solepur Karmokarpara U. P.	
10	Kumari Monakrani Dutta ..	II
	Roypur U. P.	
12	Kunja Behari Saha (E) ..	I
	Bhatpara U. P.	
15	Krishna Das Chakraverty (E) ..	II

Roll No.	Name.	Division.
	Kalyankhali U. P.	
20	Nagendra Nath Nandi (E) ..	I
	Agdiachar U. P.	
22	Pravanjan Mukherjee (E) ..	I
23	Monoranjan Gangopadhyaya ..	II
24	Niranjan Gangopadhyaya (E) ..	II
	Dighalia U. P.	
31	Durgapada Samajder (E) ..	I
32	Ramesh Chandra Chakraverty (E) ..	I
	Bisnupur U. P.	
34	Bijoypada Sheel (E) ..	II
	Brahmandanga U. P.	
35	Sivadas Ghosh (E) ..	I
38	Santosh Kumar Dey Das (E) ..	I
39	Makhan Lal Dey Das (E) ..	II
	Kumri U. P.	
41	Haripada Banerjee (E) ..	II
	Rupganj Practising U. P.	
44	Nanda Dulal Das ..	I
45	Dhirendra Nath Mallik ..	II
	Khororia U. P.	
47	Girish Chandra Biswas (E) ..	II
	Joyrabad U. P.	
50	Kunja Lal Biswas (E) ..	I
51	Santosh Kumar Biswas ..	I
52	Dhirendra Nath Adhikary ..	II
	Nirali U. P.	
54	Sumanta Kumar Das (E) ..	I
55	Hari Pada Roy (E) ..	II
56	Santosh Kumar Roy (E) ..	I
	Kalyankhali U. P.	
59	Shyama Pada Biswas (E) ..	II
60	Bhabesh Chandra Malo (E) ..	II
61	Kumari Kalitara Debi (E) ..	II
	Agdiachar U. P.	
66	Hazari Lal Sen (E) ..	I
68	Manindra Nath Biswas ..	II
	Mulia U. P.	
71	Amulya Kumar Sarker ..	II
	Icharbaha U. P.	
72	Sushil Kumar Biswas ..	II
73	Arjun Chandra Biswas ..	II
	Hogladanga U. P.	
74	Anil Chandra Mandal ..	II

Roll No.	Name.	Division.
	Bebhogdi Re-union U. P.	
75	Santosh Kumar Biswas (E) ..	II
	Barendar U. P.	
77	Sita Nath Biswas ..	II
	Raghunathpur U. P.	
79	Mahendra Nath Mandal ..	II
	Agdia U. P.	
81	Jagabandhu Mazumder (E) ..	II
	Betenga U. P.	
83	Upendra Nath Roy ..	II
	Icharbaha U. P.	
85	Anil Kumar Bairagi ..	II
	Betenga U. P.	
86	Nirmal Kumar Biswas (E) ..	I
87	Sudhir Kumar Adhikary (E) ..	I
	Kalyanpur U. P.	
88	Nalini Kanta Biswas ..	II
	Chore Khali U. P.	
89	Mukunda Lal Saha (E) ..	I
90	Khagendra Nath Saha (E) ..	I
	Brahmandanga U. P.	
92	Monohar Chandra Keertanya (E) ..	I
93	Gora Chand Saha (E) ..	I
	Padmabila U. P.	
94	Satish Chandra Paul ..	II
95	Nirendra Nath Roy (E) ..	I
	Gobindapur U. P.	
101	Bimal Chandra Chowdhury ..	II
	Santra Khali U. P.	
102	Amulyaratan Sirker (E) ..	II
103	Kiron Chandra Sirker ..	II
	Chakulia U. P.	
106	Saibalini Roy ..	I
	Alfadanga U. P.	
107	Ramendra Nath Kundu ..	I
108	Sukumar Chandra Roy Chowdhury (E)..	I
109	Binode Bihari Biswas (E) ..	I
	Raypur U. P.	
110	Abdul Khaleque Mollah (E) ..	I
	Khararia U. P.	
111	Eklas Sikdar (E) ..	I
112	Takibar Rahman Biswas (E) ..	I
114	Musammat Fatima Khatun (E) ..	II
115	Musammat Safia Khatun (E) ..	II
	Hugladanga U. P.	
120	Abdus Sattar Mollah ..	II
	Raghunathpur U. P.	
121	Haresuddin Shaikh ..	I

Roll No.	Name.	Division.
	Bowisena U. P. Maktab.	
124	Alfajuddin Mollah (E) ..	I
125	Habibar Rahman Molla ..	I
	Narail Town Maktab.	
126	Abdus Samad Mollah ..	I
127	Musammat Nasira Khatun (E) ..	I
128	Musammat Latifa Khatun (E) ..	I
	Jamrildanga U. P. Maktab.	
129	Mahammad Abdul Wahab (E) ..	I
	Mirjapur U. P. Maktab.	
131	Mahammad Abdul Rakib (E) ..	I
132	Syed Mokbul Hosain (E) ..	I
133	Kazi Taibur Rahman (E) ..	I
	Charikhada U. P. Maktab.	
140	A. K. Golam Ahmad Mian (E) ..	I
141	A. H. M. Golam Nabi (E) ..	I
144	A. S. M. Abdur Rashid (E) ..	II
	Peroli U. P. Maktab.	
145	Abdul Khaleque Mollah (E) ..	II
146	Abdul Mazid Mollah (E) ..	II
147	Akram Husain Mollah ..	I
	Tularampur U. P. Maktab.	
148	Salimuddin Tarafdar (E) ..	II
	Sarkeldanga Free Maktab.	
149	Rustom Mollah ..	II
	Searbor U. P. Maktab.	
155	Abdul Wazed Shaikh (E) ..	I
156	Abdul Jabbar Mollah (E) ..	I
	Kalyanpur U. P.	
167	Golam Mowla Molla (E) ..	II
	Panial U. P.	
168	Abdur Rajjak Molla ..	II
	Charbalidia U. P.	
171	Mokbul Hossain Molla ..	II
172	Ahmad Hossain Molla ..	II
173	Munshi Hafizul Hoque (E) ..	I
	Lankar Char U. P.	
175	Md. Shahjahan Molla ..	II
	Chapulia U. P.	
176	Motaleb Molla (E) ..	II
	Kamargram U. P.	
179	Abdur Rajjak Mia (E) ..	I
181	Abdul Khalique Molla (E) ..	II
182	Badiyuzzaman Mia (E) ..	II
	Kumer U. P.	
187	Syed Motahar Ali (E) ..	I
	Chandinagore Maktab.	
191	Kazi Noor Muhammad (E) ..	I
192	Shaikh Tafazzel (E) ..	II
193	M. Jobeda Khatun ..	I
194	Kazi Forman Ali (E) ..	I

J. G. SEN, for *Inspector of Schools.*

Presidency Division.

40-1A, Free School Street, Calcutta, the 22nd December 1934.

The following candidates have passed the Primary (Maktab) Final Examination, 1934 ;—

"E" indicates that the candidates have passed in English.

Roll No.	Name.	Division.
	Khulna district.	
	Khulna Centre.	
	Nandanpur U. P.	
1	Durgabar Bannerjee (E) ..	I
2	Biswaranjan Dutta Barma (E) ..	I
3	Kumari Anila Rani Dutta (E) ..	I
4	Kumari Usharani Majumdar (E) ..	I
	Pithabhoge U. P.	
5	Rabindra Nath Chakraverty (E) ..	II
	Taltola U. P.	
6	Tarulata Dutta ..	I
7	Bhupendra Nath Dutta ..	I
8	Baidyanath Misra ..	II
	Taltola East U. P.	
10	Fanibhusan Dutta (E) ..	I
	Tilak U. P.	
11	Harisankar Roy (E) ..	II
12	Sudhir Kumar Dutta (E) ..	I
	Swalpa Bahirdia U. P.	
13	Nitai Chandra Ghosh ..	II
	Giatala Mansa U. P.	
14	Prafulla Kumar Dutta ..	I
15	Tarapada Roy ..	II
	Sovna West U. P.	
16	Benodebehari Pramanik (E) ..	I
	Sovna Ghoshpara U. P.	
17	Bimal Chandra Chatterjee (E) ..	II
18	Kalidasi Chatterjee (E) ..	II
19	Golak Chandra Mukherjee (E) ..	I
	Pabla Banikpara U. P.	
20	Dhirendra Nath Das ..	I
	Formizekhana Bhadrapara U. P.	
21	Satyaranjon Bhadra (E) ..	I
23	Kumari Ashalata Bhadra (E) ..	I
	Senhati U. P.	
24	Satyendra Nath Dutta (E) ..	I
25	Birendra Nath Dutta (E) ..	I
26	Manilal Chakravorty (E) ..	II
27	Narayan Kumar Mukherjee (E) ..	I
28	Subodh Kumar Pal (E) ..	II
29	Benoy Krishna Pal (E) ..	II
	Dighalia U. P.	
30	Kanailal Das (E) ..	II

Roll No.	Name.	Division.
	Fulbari B. K. U. P.	
34	Ananta Kumar Dutta (E) ..	I
35	Amarendra Nath Bose (E) ..	I
36	Amarendra Nath Pal (E) ..	II
37	Amarkrishna Dey (E) ..	I
38	Bimal Krishna Das (E) ..	I
39	Benoy Krishna Dey (E) ..	II
40	Bhabesh Chandra Pal (E) ..	I
41	Amal Kanti Pal (E) ..	I
42	Santosh Kumar Dey (E) ..	II
43	Madhusudan Mittra (E) ..	I
44	Sudhansubhusan Bisnu (E) ..	II
46	Pravat Kumar Ghose (E) ..	I
47	Kalidas Ghose (E) ..	II
50	Abani Kumar Dey (E) ..	I
51	Haripada Dey (E) ..	I
52	Narayan Chandra Das (E) ..	II
53	Santosh Kumar Ghose (E) ..	I
54	Mani Mohan Bandyopadhyaya (E) ..	I
57	Adhir Kumar Das (E) ..	I
59	Benodebehari Nandi ..	II
60	Ganesh Chandra Chakravarty (E) ..	II
61	Jogendra Nath Dey (E) ..	II
62	Khagendra Nath Bose (E) ..	I
63	Dhirendra Nath Dutta (E) ..	II
66	Haridas Dey (E) ..	II
67	Ajit Kumar Dutta (E) ..	I
68	Kalidas Chowdhury (E) ..	I
69	Gourhari Bose (E) ..	I
70	Anil Kumar Bose (E) ..	I
71	Malinabala Devi (E) ..	I
72	Nirupama Pal (E) ..	II
	Chandanimahal Dakshinpara U. P.	
73	Baidyanath Pal (E) ..	I
74	Kumari Kamala Bhowmik (E) ..	I
75	Kumari Annapurna Bhowmik (E) ..	I
	Maheshwarpasha Board U. P.	
76	Krishna Kumar Mazumdar (E) ..	II
77	Dinanath Chattopadhyaya (E) ..	II
78	Nanigopal Ghose (E) ..	II
	Damodar Muktamoyee U. P.	
80	Bikramjit Kumar Sen (E) ..	I
81	Himansu Kumar Nandi (E) ..	I
82	Sukhamoy Guha (E) ..	I
84	Jagadish Chandra Dutta (E) ..	I
85	Goursankar Nandi ..	II
87	Sital Chandra Dutta ..	II
88	Subimal Kumar Sen (E) ..	I
89	Amal Krishna Baksi (E) ..	II
90	Paritosh Kumar Nandi ..	I
	Khanzapur Board U. P.	
91	Ranajit Kumar Das ..	I
92	Sibdas Nandi ..	II
	Nowdubi U. P.	
96	Matilal Chakravarty ..	II
	Victoria Infant.	
98	Jyoti Kumar Mittra (E) ..	I
99	Krishna Gopal Chatterjee (E) ..	II
	Khalispur Goalpara U. P.	
101	Sachindra Nath Bhowmik (E) ..	I
102	Haripada Pal (E) ..	I
103	Bankimbehari Pal (E) ..	I
105	Kamal Krishna Majumdar (E) ..	I
106	Satish Chandra Bhowmik ..	II
107	Kalipada Haldar (E) ..	II
108	Adhir Kumar Bhadra (E) ..	I
110	Kumari Manorama Das (E) ..	I
111	Kumari Kamalabala Bhowmik (E) ..	I
112	Kumari Subarnabala Das (E) ..	I
113	Kumari Sushamabala Nandi ..	I
	Chandanimahal Dakshinpara U. P.	
115	Haripada Pramanik ..	I

Roll No.	Name.	Division.
	Nowdubi U. P.	
116	Atulkrishna Shil ..	I
	No. II Gangni U. P.	
118	Tarapada Mitra ..	II
	Kharibunia U. P.	
123	Fanibhusan Roy ..	I
	Senpara Jhaltala U. P.	
125	Santosh Kumar Mondal (E) ..	I
	Dahakula U. P.	
126	Sreemati Bijalibala Haldar (E) ..	I
127	Khagendranath Mallick ..	I
	Borne U. P.	
128	Meghnad Biswas ..	II
	Gutudia No. 2 U. P.	
129	Ajit Kumar Roy ..	II
130	Amalendu Roy ..	II
131	Fakir Chand Roy ..	II
	Guatala Mrijapur U. P.	
133	Lalitmohan Biswas ..	I
	Jaora Orabunia U. P.	
134	Fatiklal Roy (E) ..	II
135	Kalipada Haldar ..	II
	Sovna Ghoshpara U. P.	
137	Amulya Kumar Kundu (E) ..	I
	Dhanibunia U. P.	
140	Abhimannyu Biswas ..	II
142	Mondhar Chandra Mondal (E) ..	II
144	Surendra Nath Roy (E) ..	I
	Kulati No. 2 U. P.	
146	Kalipada Mondal ..	II
147	Gadadhar Mondal ..	I
148	Gayaram Mondal ..	II
149	Narayan Das Sarkar ..	II
152	Kishorimohan Tarafder ..	II
	Kola U. P.	
153	Nalinikanta Biswas ..	II
154	Mahendranath Biswas ..	II
155	Girish Chandra Sarkar ..	II
	Pabla Banikpara U. P.	
156	Madhab Chandra Saha (E) ..	I
157	Phanibhusan Das (E) ..	I
158	Bejoykumar Ray ..	I
159	Nrityagopal Saha ..	I
160	Manmatha Nath Saha ..	II
	Fulbari B. K. U. P.	
161	Haridas Kundu (E) ..	II
	Baniakhamar U. P.	
162	Narendra Nath Mandal (E) ..	I
163	Jyotish Chandra Mondal (E) ..	II
	Kagdi U. P.	
164	Narayan Chandra Bawali (E) ..	II
	Nowdubi U. P.	
168	Basudeb Biswas (E) ..	I

Roll No.	Name.	Division.
	Aronghata Kapalipara U. P.	
169	Urmilabala Haldar (E) ..	I
	Sachibunia U. P.	
171	Naliniranjan Biswas ..	I
172	Bimalchandra Goldaf ..	II
173	Subasini Mandal ..	II
	Hotalbunia U. P.	
177	Kalipada Mistri ..	II
	Phultala U. P.	
181	Jagatbandhu Roy ..	II
183	Atul Chandra Roy ..	II
184	Prafulla Kumar Mondal (E) ..	II
	Balabunia U. P.	
185	Jagadish Chandra Mallick (E) ..	I
186	Satis Chandra Roy (E) ..	I
	Masardanga U. P.	
189	Narendranath Roy (E) ..	II
	Chalna Board.	
190	Kshirmohan Saha (E) ..	II
191	Bepinbehary Haldar (E) ..	II
	Pankhali U. P.	
192	Sarat Chandra Roy ..	II
193	Abhilaschandra Roy ..	I
	No. I Gangni U. P.	
199	Nimai Chand Biswas ..	I
200	Rajkumar Biswas (E) ..	I
201	Harendranath Biswas ..	I
	Suvdia U. P.	
202	Durlab Chandra Biswas ..	II
	Burirdanga U. P.	
205	Tarani K. Roy (E) ..	II
206	Ananta Kr. Biswas (E) ..	II
207	Sahadev Ch. Halder (E) ..	II
	Swalpa Bahirdia U. P.	
210	Jamadar Abdul Matleb ..	II
	Senpara Jhaltal U. P.	
211	Mohor Ali Molongi ..	II
	Gutudia No. I. U. P.	
212	Hashem Ali Ghazi ..	II
213	Qazi Kaosar Ali ..	II
	Pabla Banikpara U. P.	
220	Raoson Ali Khan ..	II
222	Reajuddin Bhangi ..	I
223	Abdul Hakim Molla ..	I
	Fulbari B. K. U. P.	
227	Atiar Rahman Shaikh (E) ..	I
228	Abdul Gani Shaikh (E) ..	II
229	Abdus Samad Shaikh (E) ..	II
230	Mafiuddin Chowdhury (E) ..	II
231	Abdul Jabbar Munsi (E) ..	II
	Aronghata Kapalipara U. P.	
234	Jamal Shaikh ..	I
	Khalispur Goalpara U. P.	
235	Kazi Giasuddin (E) ..	I

Roll No.	Name.	Division.
	Maukhali U. P.	
239	Amjad Ali Molla (E) ..	I
240	Muhammad Anwaruddin (E) ..	II
241	Abdur Rashid Molla ..	II
243	Multan Sardar ..	II
	Nagarkandi U. P.	
248	Rabia Khatoon (E) ..	II
	Bardlighata U. P. Maktab.	
249	Mohd. Raisuddin Shaikh (E) ..	I
250	Anwara Khatoon ..	I
251	Shaikh Habibar Rahman ..	I
	Deana South U. P. Maktab.	
253	Abdul Jalil Morol ..	II
	Joar U. P. Maktab.	
254	Razi Khatoon (E) ..	II
255	Abdul Aziz Morol (E) ..	II
	Boruna U. P. Maktab.	
259	Abdul Wahed Sardar ..	I
260	Amjad Ali Molla (E) ..	I
	Khoria Khalpar U. P. Maktab.	
261	Azizur Rahman Sardar ..	II
262	Zainul Abedeen (E) ..	I
264	Amjad Ali Ghazi (E) ..	II
	Tolna Jamira U. P. Maktab.	
266	Safedali Biswas ..	II
	Garuikhali Alamshali U. P. Maktab.	
268	Ashrafuddin Ghazi (E) ..	I
269	Tamizuddin Sardar ..	II
272	Arman Ali Ghazi ..	II
274	Maqbulali Ghazi ..	II
	Amdulia U. P. Maktab.	
275	Sardar Abdul Karim ..	II
276	Faqir Afsaruddin (E) ..	II
	Kanthalbati U. P. Maktab.	
283	Abdul Jabbar Shaikh (E) ..	I
284	Syed Ahmad (E) ..	I
286	Abdul Karim (E) ..	I
	Baliadanga U. P. Maktab.	
288	Ismail Molla (E) ..	I
	Chandpur U. P. Maktab.	
289	Md. Shamsul Hoq Mollah ..	I
290	Mosammat Ummay Kulsum (E) ..	I
	Dariala U. P. Maktab.	
292	Md. Ishaque (E) ..	I
	Kulia U. P. Maktab.	
293	Harunar Rashid Molla (E) ..	II
	Kapilmuni Centre.	
	Boratia U. P.	
1	Ratan Krishna Banerjee (E) ..	I
2	Bhupendra Nath De (E) ..	I
3	Manindranath De (E) ..	I
	Sovna Kapalipara U. P.	
4	Narendra Kumor Pal (E) ..	I
	Maguraghona U. P.	
5	Gour Chandra Pal (E) ..	I
	Bhadradia West U. P.	
6	Umapada Sarker (E) ..	I
	Uludanga Rahimpur U. P.	
7	Sudhir Kumar Hari (E) ..	II
	Sanatan Kati Basupur U. P.	
8	Kumari Kanakprava Basu (E) ..	I
9	Narayan Chandra Basu (E) ..	II
10	Shibapada Basu (E) ..	I
11	Jagadish Chandra Ghosh (E) ..	I
12	Radharaman Ghosh (E) ..	I
13	Jnanendranath Ghosh (E) ..	I
14	Kumari Gouridasi Basu ..	I
	Mamudkati J. N. U. P.	
15	Muktalal Ghosh (E) ..	II
16	Chittaranjan Basu (E) ..	II
17	Krishnalal Basu (E) ..	I
	Paikgacha Model U. P.	
18	Sreemati Kalidasi Devi (E) ..	I
	Arangpara U. P.	
19	Rabindranath Roy Choudhury (E)	I
	Khalish Khali U. P.	
20	Sudhir Krishna Chandra (E) ..	I
21	Santosh K. Ghose (E) ..	I
22	Harisadhan Ghose (E) ..	I
23	Phanibhusan Hoar (E) ..	I
25	Debendranath Kar (E) ..	I
26	Birendranath Lahiri (E) ..	I
27	Bindhubhusan Pramanik (E) ..	I
28	Kalipada Singha (E) ..	II
29	Haridas Bose (E) ..	II
31	Krishnapada Bose (E) ..	II
	Kaikhali U. P.	
32	Satish Ch. Chakravarty (E) ..	I
	Nangla U. P.	
33	Promad Ranjan Roy (E) ..	II
34	Kartik Ch. Chakravarty (E) ..	I
	Toardanga U. P.	
38	Bimal Kumar Mukherjee (E) ..	I
	Magura U. P.	
39	Shibapada Dey (E) ..	I
40	Manindranath Sen (E) ..	II
	Kanaidia U. P.	
41	Kumari Nanibala De (E) ..	I
	Magura U. P.	
42	Birendra Nath De (E) ..	I
	Boratia U. P.	
44	Sudhir Krishna Mallik (E) ..	I
45	Kalipada Nandy (E)	I
46	Bimalendu Nath (E) ..	I
	Bhadradia East U. P.	
47	Amulya Krishna Halder (E) ..	I
48	Atul Krishna Sarker (E) ..	I
	Bhadradia West U. P.	
53	Rangini Sundari Mallik ..	II

Roll No.	Name.	Division.
	Paschim Patibunia U. P.	
54	Birendranath Mondal (E) ..	I
55	Akhil Chandra Sardor (E) ..	I
	Khutakhali U. P.	
59	Benodebehari Roy ..	II
	Sovna Kapalipara U. P.	
61	Pulinbehari Biswas (E) ..	I
62	Prafulla Kumer Kundu (E) ..	I
63	Birendranath Malo (E) ..	I
64	Jitendranath Biswas (E) ..	I
	Sibnagar U. P.	
65	Nagendranath Sana (E) ..	I
66	Kalipada Roy (E) ..	II
68	Amarendranath Roy (E) ..	I
	Madhukhali U. P.	
71	Satish Chandra Mandal (E) ..	II
	Tetultala U. P.	
72	Bijoy Krishna Baidya (E) ..	I
	Lata U. P.	
75	Rupchand Mandal (E) ..	I
76	Dhirendranath Mandal (E) ..	I
77	Atulchandra Roy (E) ..	I
78	Harendranath Biswas ..	II
	Howly U. P.	
84	Jnanendranath Sircar (E) ..	II
	Boalia U. P.	
87	Jyotis Chandra Sadhu (E) ..	I
88	Bishnupada Sadhu (E) ..	II
	Matbati U. P.	
89	Bimal Krishna Sircar (E) ..	I
90	Dhirendranath Sircar (E) ..	I
91	Sannyasi Charan Biswas (E) ..	I
92	Pulin Behari Biswas (E) ..	I
	Laskar J. N. U. P.	
94	Kalipada Sardar (E) ..	I
95	Jogendranath Dhali (E) ..	I
97	Narendranath Sardar (E) ..	II
	Krishnagar Hula U. P.	
100	Bimal Krishna Das (E) ..	I
101	Purna Chandra Mandal (E) ..	I
102	Abhaya Charan Mandal (E) ..	I
104	Nirapada Biswas (E) ..	I
	Kharia U. P.	
105	Bhupatibhusan Mridha (E) ..	II
106	Basudev Sircar (E) ..	I
107	Jatindranath Roy (E) ..	II
	Gazinagar U. P.	
113	Devendranath Mandal (E) ..	I
114	Pravas Chandra Mandal (E) ..	II
	Arangpara U. P.	
118	Lalit Mohan Das (E) ..	II
119	Sushil Krishna Das (E) ..	I
120	Sudhir Krishna Das (E) ..	II
	Maguradanga U. P.	
123	Kumud Ranjan Mandal (E) ..	II
124	Kalipada Sarkar (E) ..	I

Roll No.	Name.	Division.
	Kaikhali U. P.	
127	Tara Pada Baidya (E) ..	I
128	Haripada Biswas (E) ..	I
129	Mangaleswar Baidya (E) ..	I
130	Jitendra Nath Nath (E) ..	I
131	Adhir Krishna Mandal (E) ..	II
	Kanidia U. P.	
133	Bhagaban Nath (E) ..	I
134	Tara Pada Nath (I) (E) ..	I
	Gacha U. P.	
136	Kali Pada Sarkar (E) ..	II
	Buria U. P.	
139	Jajneswar Mandal (E) ..	I
140	Babu Ram Mandal (E) ..	II
	Raipur U. P.	
147	Devendra Nath Biswas (E) ..	II
	Pratapkati U. P.	
149	Muhammad Afajuddin Khan ..	I
	Sanatankati Sheikhpara U. P.	
151	Shaikh Abdul Majed (E) ..	I
152	Munshi Shamsur Rahman (E) ..	II
153	Sheikh Abdul Mabud ..	I
	Krishnagar Hula U. P.	
157	Munshi Yusufuddin Mali (E) ..	I
158	Munshi Nasiruddin Ghazi ..	I
	Kharia U. P.	
161	Muhammad Jubbar Ali Ghazi (E) ..	I
	Hareharnagar U. P.	
164	Shaikh Abdunnabi (E) ..	I
	Naksha U. P. Maktab.	
165	Ghazi Shamsher Ali (E) ..	I
	Modinabad U. P. Maktab.	
166	Muhd. Zahiruddin (E) ..	I
167	Muhd. Umed Ali (E) ..	I
168	Muhd. Sanaullah (E) ..	I
169	Muhd. Ismail Hossain (E) ..	I
170	Muhd. Amjad Hossain (E) ..	II
171	Muhd. Baqaruddin (E) ..	II
172	Muhd. Aqel Ali ..	II
173	Muhd. Serajuddin Molla (E) ..	II
	Kalna U. P. Maktab.	
174	Muhd. Velayet Ali (E) ..	I
175	Muhd. Noorali Sana (E) ..	I
177	Muhd. Iman Ali (E) ..	I
179	Muhd. Moizuddin (E) ..	I
	Dohar U. P.	
181	Shamsuddin Shaikh ..	I
	Durgapur U. P. Maktab.	
183	Shaikh Md. Abdus Shukur (E) ..	I
184	Shaikh Md. Shahidullah (E) ..	I

Roll No.	Name.	Division.
	Bagerhat Centre.	
	Diapara U. P.	
2	Kshudiram Acharyya (E)	II
	Baniagati U. P.	
8	Narendranath Chakrabatty (E)	II
9	Anathbandhu Dutt	II
	Utterpara U. P.	
10	Probode Ranjan Chakrabatty (E)	I
11	Satyendrakumar Roy Chowdhury (E)	I
12	Sitalprosad Gangopadhaya	II
13	Nripendra Kumar Roy Chowdhury	II
14	Sambhulal Mukhopadhaya (E)	II
15	Susil Ranjan Chakraborty (E)	II
	Bagmara U. P.	
20	Anil Krishna Dutt (E)	I
21	Sudhir Kumar De (E)	I
22	Narayandas Halder (E)	I
23	Jiban Krishna Sen (E)	I
24	Debendranath De (E)	I
25	Nani Gopal Sen (E)	I
	Bishnupur U. P.	
26	Chittaranjan Bhattacharyya (E)	I
27	Baidyanath Bhatta	I
	Champatola U. P.	
29	Sanat Kumar Halder (E)	I
30	Kalipada Sen, I (E)	I
32	Nirode Kumar De (E)	I
33	Benode Behari Sen (E)	I
	Karari U. P.	
36	Dhirendra Nath Roy (E)	II
	Panchpara U. P.	
39	Jatindra N. Chakravarty (E)	II
	Pepulbunia U. P.	
40	Jagesh Ch. Mukherjee (E)	I
	Baruikhali U. P.	
42	Sisir Kr. Bhattacharjee (E)	I
43	Kalidas Banerjee (E)	II
44	Manindra N. Basu	II
45	Phanibhusan Guha (E)	I
46	Kumari Umarani Debi (E)	I
47	Susil Kumar Chakraverty (E)	II
	Dhaldah U. P.	
48	Narendra M. Kanjilal (E)	II
	Singarbunia U. P.	
49	Ratan Ch. Chakravarty (E)	II
50	Krishna Pada Banerjee (E)	II
	Perikhali U. P.	
51	Tarapada Bakshi (E)	I
	Ramchandrapur Board U. P.	
52	Mohit Kr. Banerjee (E)	II
53	Tejamoy Banerjee (E)	II
	Khanderkola U. P.	
54	Satish Chandra Biswas	I

Roll No.	Name.	Division.
	Kathali U. P.	
55	Susil Kumar Mandal (E)	I
56	Kailash Chandra Biswas (E)	I
58	Kishori Lal Bairagi (E)	I
59	Kali Kanta Hira	I
61	Dhirendranath Roy	II
	Kamargram U. P.	
64	Khagendranath Dhali	II
	Dumuria U. P.	
67	Dibdas Biswas (E)	I
68	Lalmohan Mandal	II
	New Kalsira U. P.	
69	Debendranath Biswas (E)	I
70	Bejoy Kumar Biswas (E)	I
	Khalispur U. P.	
71	Annanda Prasad Gain	II
72	Ananta Kumar Somadder	II
	Bhairabnagar U. P.	
73	Lal Behari Mandal	II
74	Panchanan Dhali	II
75	Khagendra Nath Roy (E)	II
	Dalnaguni U. P.	
76	Gurubar Sarkar	I
77	Pramathanath Mandal (E)	II
78	Rajendranath Mallik (E)	II
	Sattola U. P.	
80	Lakshmi Narayan Das (E)	II
	Chulkati Ghanashyampur Board U. P.	
84	Niranjan Debnath (E)	I
	Chaultoori U. P.	
87	Raj Kumar Roy (E)	I
	Diganga U. P.	
91	Jogendranath Barai	I
92	Satish Chandra Biswas	II
	Rangamatia U. P.	
98	Nityananda Biswas	II
	Pangasia Paranpur U. P.	
99	Bhagirath Mandal (E)	I
100	Haribar Roy (E)	I
101	Jogendranath Mandal	II
	Charlatima U. P.	
105	Anadi Kanta Mandal (E)	I
106	Rati Kanta Bala (E)	I
	Halisahar U. P.	
108	Nagendra Nath Mandal (E)	I
	Gangachannana U. P.	
111	Dhirendranath Roy (E)	I
112	Sailesh Chandra Bain (E)	I
	Uttarpara U. P.	
115	Amulya Kumer Saha (E)	II
116	Adhir Kumer Saha	II
	Bora Sannyashi Marichburia U. P.	
119	Sudhir Ranjan Roy	I

Roll No.	Name.	Division.
	Bara Sannyashi U. P.	
122	Upendra N. Mridha ..	II
	Banstali U. P.	
124	Lakshmi K. Mondal ..	I
125	Nirod Behari Mondal (E) ..	I
127	Jatindra N. Biswas ..	II
	Baruipara U. P.	
128	Atul Krishna Nath (E) ..	I
	Barberia U. P.	
129	Dwijabar Mondal (E) ..	I
130	Mohananda Halder (E) ..	II
	Gobindapur U. P.	
132	Mukunda Behari Pal (E) ..	I
	Dakra U. P.	
133	Madhab C. Sikdar (E) ..	I
134	Nagendra N. Roy ..	I
	Singarbunia U. P.	
135	Sidheswar Mondal ..	II
136	Nagendra N. Mondal ..	II
	Peshkarabad U. P.	
137	Rajendra N. Sikdar (E) ..	II
	Dhuliganti U. P.	
138	Nirod Behari Ghorami ..	II
	Khagraghat Chandpur U. P.	
140	Prafulla Kr. Mondal ..	I
	Bairagikhali U. P.	
144	Keshab Lal Gain (E) ..	I
145	Ajit Kr. Roy (E) ..	II
	Digraj U. P.	
148	Binod Behari Halder (E) ..	I
149	Nagendra N. Mistry ..	II
150	Kalipada Adhicary (E) ..	II
	Malgazi U. P.	
152	Monohar Biswas (E) ..	II
153	Sarat Ch. Mondal (E) ..	II
154	Nirod Behari Mondal (E) ..	II
156	Harendra N. Mandal (E) ..	II
157	Benode Behari Mondal (E) ..	II
159	Jatindra N. Bala (E) ..	II
160	Prahlad Ch. Mondal ..	II
	Panchpara U. P.	
161	Mohendra Nath Majumdar (E) ..	II
162	Phulmala Majumdar ..	II
	Santoshpur U. P.	
164	Lakhan Ch. Majumdar ..	II
	Paschim Jabai U. P.	
168	Sukhendra N. Mondal ..	II
	Gona Belai U. P.	
169	Paresh N. Roy ..	II
170	Atul Krishna Adhicary ..	II
	Bhaga U. P.	
173	Nakul Ch. Pal (E) ..	II

Roll No.	Name.	Division.
	Kamargram U. P.	
175	Abdus Sattar Shaikh (E) ..	II
	Kachua U. P.	
177	Abdul Jabbar Bhuiya ..	II
178	Joynuddin Shaikh (E) ..	II
	Uttarpara U. P.	
180	Tasiruddin Shaikh (E) ..	I
181	Habil Molla (E) ..	II
	Champatola U. P.	
182	Syed Asfak Ali (E) ..	II
	Kandapara U. P.	
184	Shaikh Ahir Rahman (E) ..	II
	Santoshpur U. P.	
186	Abdul Hamid Shaikh (E) ..	II
188	Shaikh Sahabuddin (E) ..	II
	Barukhali U. P.	
189	Mir Tozammal Ali (E) ..	II
	Dhaldali U. P.	
190	Kazi Asaruddin ..	II
	Khagraghat U. P.	
191	Gazi Mominuddin Ahmed ..	I
	Govindapur U. P.	
192	Sabed Ali Shaikh (E) ..	II
	Baruipara U. P.	
195	Syed Amjad Ali (E) ..	I
	Sankernagore U. P.	
199	Kazi Esaruddin ..	II
	Shatshika U. P. Maktab.	
201	Sayed Ashraf Ali (E) ..	I
202	Shaikh Adiluddin (E) ..	I
	Paschimbhag U. P. Maktab.	
203	Easin Shaikh ..	II
	Shanmankati U. P. Maktab.	
207	Mosammat Amina Khatun ..	II
208	Muhammad Ali Hassan (E) ..	II
210	Shaikh Hashem Ali ..	II
211	Molla Abdul Aziz (E) ..	I
212	Shikdar Ahmed Ali (E) ..	II
	Gajalia U. P. Maktab.	
213	Shaikh Abdur Razzak (E) ..	I
214	Karikar Asmat Ali (E) ..	I
215	Fakir Abdul Zalil (E) ..	II
217	Khan Mansur Ali (E) ..	II
218	Shaikh Abdul Jalil ..	II
	Charbagdia U. P. Maktab.	
220	Shaikh Shahdat Ali (E) ..	II
	Khararia U. P. Maktab.	
221	Shaikh Abdul Karim (E) ..	I
222	Sabdar Abdul Malek (E) ..	II
223	Shaikh Abdus Samad (E) ..	I
224	Khan Jahan Ali (E) ..	II

Roll No.	Name.	Division.
	Dhopakhali U. P. Maktab.	
225	Shaikh Abdus Sobur (E)	II
226	Shaikh Abdul Mokid (E)	II
227	Shaikh Ashrafuddin (E)	I
228	Kazi Abdur Razzak (E)	II
	Khararia U. P. Maktab.	
229	Mosammat Hamida Khatun (E)	I
	Charbagdia U. P. Maktab.	
230	Md. Fazlur Karim (E)	I
231	Md. Abdul Aziz (E)	II
232	Md. Abdul Bari (E)	II
233	Khan Sakendar Ali (E)	I
	Morrelganj Centre.	
	Perkumarkhali U. P.	
3	Manindra Lal Manjhi (E)	I
4	Atul Krishna Manjhi (E)	I
	Bara Rajapur U. P.	
5	Priyanath Howlader (E)	II
	Rajapur East U. P.	
7	Rajkumar Mondal	II
	Anuragachia U. P.	
8	Haridas Howlader	II
9	Dhirendra N. Howlader (E)	II
11	Priya Nath Howlader (E)	I
12	Snehalata Maitra (E)	II
	Kahardah U. P.	
13	Narendra N. Sikdar (E)	I
14	Biswa N. Halder (E)	I
	Debitala U. P.	
15	Jamini K. Saha (E)	I
	Sonekhali U. P.	
16	Sarat Ch. Daksa	II
17	Narendra N. Bachar	I
18	Amulya Kr. Debnath	II
	Sutalori Baharbunia U. P.	
28	Nur Muhammad Shaikh	II
	Rajapur East U. P.	
31	Nur Muhammad Gazi	II
	Baniakhali U. P. Maktab.	
33	Noor Muhammad Biswas (E)	II
	Sotonalbunia U. P. Maktab.	
37	Muhammad Wazed Ali	I
38	Muhammad Quasem Ali Howladar	II
39	Muhammad Eusof Khan (E)	I

Roll No.	Name.	Division.
	Nalbunia U. P. Maktab.	
40	Abdur Rashid Howladar (E)	II
41	Abul Hosain Md. Matiar Rahman (E)	I
42	Abdul Mazid Howladar (E)	II
	Zamirtala U. P. Maktab.	
44	Mominuddin Howladar (E)	I
	Phulhata U. P. Maktab.	
46	Abdul Gofur Howladar (E)	I
47	Najam Ali Howladar (E)	II
	Golbunia U. P. Maktab.	
50	Md. Abdur Rahman Mia (E)	I
	Charhoglabunia U. P. Maktab.	
53	Md. Abul Quasem Shikdar (E)	I
55	Md. Abul Quasem Shah Fakir (E)	I
	Paschimshonkhali U. P. Maktab.	
59	Md. Eakub Ali Howladar (E)	II
60	Abul Latif Howladar (E)	II
	Panchkoran U. P. Makatb.	
61	Md. Rafizuddin (E)	I
62	Md. Abdul Quader (E)	I
	Amtoli U. P. Maktab.	
63	Nur Muhammad Howladar (E)	II
64	Azizar Rahman Biswas	II
	Narkelbaria U. P. Maktab.	
67	Lehazuddin Molla (E)	II
68	Mokbul Ali Zamadar (E)	II
69	Faizar Ali Howladar (E)	II
	Jibanduary U. P. Maktab.	
72	Abdul Momen Akon	II
	Golbunia U. P. Maktab.	
74	Mosammat Tohurannessa (E)	I
	Bhaijara U. P. Maktab.	
75	Manohar Chandra Haldar (E)	II
	Satkhira Centre.	
	Satkhira G. N. U. P.	
1	Chandranath Choudhury (E)	I
2	Krishnaath Banerjee (E)	I
3	Bhola Nath Chatterjee (E)	II
	Kukhrali U. P.	
5	Hari Pada Basu (E)	I
	Jhaudanga U. P.	
6	Anukul Ch. Ghose (E)	I
7	Kartick Ch. Ghose (E)	I
8	Tara Pada Adhikary (E)	I

Roll No.	Name.	Division.
	Chaygharia U. P.	
9	Phanindranath Sharma (E)	II
	Patharghata U. P.	
10	Tarak Nath Chakrabertty (E)	II
	Rewi U. P.	
13	Narapati Biswas (E)	II
	Beliadanga U. P.	
14	Sudhir Krishna Paul (E)	II
	Boinkiri U. P.	
16	Jitendranath Chatterjee (E)	II
17	Achutananda Mukherji (E)	II
	Nawapara U. P.	
18	Nalini Kanta Basu	II
	Mukundapur U. P.	
19	Naba Kumar Dutta (E)	I
	Panchpota U. P.	
20	Nandadulal Kundu	I
	Assasuni U. P.	
21	Bishnupada Chawdhury (E)	I
	Sodekona U. P.	
22	Adhir Krishna Mitra (E)	I
	Ramnagore U. P.	
23	Nirmal Chandra Banerjee (E)	II
24	Sukumar Mazumdar (E)	II
	Baigooni U. P.	
28	Chandrakanta Halder (E)	II
	Gopinathpur U. P.	
29	Hemanta Kumar Nandi (E)	II
30	Saroj Kumar Roy (E)	I
31	Harinarayan Mukhopadhya (E)	I
32	Pulinbehari Bandopadhya (E)	I
	Jaynagore U. P.	
34	Chitta Ranjan Ghosh (E)	I
	Murarikati Gangadhar F. U. P.	
35	Nandadulal Mazumdar (E)	I
36	Biswanath Nandi (E)	I
	Tulsidanga U. P.	
38	Birendra Nath Ghosh (E)	II
39	Tarapado Ray Chowdhury (E)	II

Roll No.	Name.	Division.
	Broja Baksha U. P.	
40	Kalibhusan Kar (E)	II
	Satkhira P. N. U. P.	
43	Krisna Pada Das (E)	I
	Chhayghoria U. P.	
46	Hari Pada Biswas (E)	II
47	Bhaktaram Biswas (E)	II
	Rewi U. P.	
49	Bhadra Kumar Biswas (E)	II
50	Hridaynath Mondal (E)	II
51	Anil Kumar Sarkar (E)	II
52	Adhir Kumar Das (E)	II
	Beliadanga U. P.	
53	Shiba Pada Bysak (E)	I
54	Jitendranath Biswas	II
55	Amulya Ratan Mali	II
	Debnagar U. P.	
56	Lakshman Ch. Sarkar (E)	II
	Benirpota U. P.	
58	Sudhir Krisna Sardar	II
	Jhargacha-Daulatpur.	
62	Subal Chandra Mondal (E)	I
	Naktara.	
63	Shibapada Sarkar (E)	I
64	Gora Chand Gain (E)	I
65	Monmotha Nath Bala	II
	Langaldaria.	
66	Sudhanshu Kumar Mondal (E)	I
67	Jnanendra Nath Sarkar (E)	I
	Mariala.	
68	Krishnapada Mondal (E)	II
	Kalaroa Pradhising U. P.	
71	Krishnapada Golder (E)	I
	Kamalkati.	
72	Purna Chandra Biswas (E)	II
73	Nagendra Nath Mondal (E)	II
	Baiguni U. P.	
74	Gopal Chandra Mandal (E)	I
75	Baidya Nath Das (E)	II
	Nagarghata Rahmatia U. P. Maktab.	
77	Haripada Bairagi (E)	I
78	Akhil Chandra Mandal (E)	II

Roll No.	Name.	Division.
	Satkhira G. N. U. P.	
79	Abdus Sovan Sardar (E) ..	I
	Rasulpur U. P.	
80	Md. Sofi Khan (E) ..	I
81	Md. Wares Khan (E) ..	I
	Jhaudanga U. P.	
82	Md. Hormuz Ali Dalal (E) ..	I
	Ghonakazipara U. P.	
83	Sardar Muzammel Haque ..	I
	Boinkari U. P.	
85	Absar Ali Mondal (E) ..	II
	Bhatshala U. P.	
86	Md. Faezullah Gazi ..	I
	Mukundapur U. P.	
89	Abdul Gofur Khan (E) ..	I
	Sakhipur U. P.	
90	Md. Golam Jabbar Sardar (E) ..	II
91	Md. Nur Jamal Sardar (E) ..	II
	Jhargachha-Daulatpur U. P.	
92	Md. Abdul Mannan Khan (E) ..	II
	Assasuni U. P.	
93	Md. Jahiruddin (E) ..	I
94	Md. [illegible]inuddin (E) ..	I
95	Md. Motleb Ali (E) ..	I
96	Md. Keamuddin (E) ..	II
97	Md. Abdul Aziz (E) ..	II
	Langaldaria U. P.	
101	Md. Naimuddin Sardar (E) ..	I
102	Md. Aimuddin Sardar (E) ..	I
103	Md. Wazed Ali Sana (E) ..	I
	Mariab U. P.	
104	Md. Abdullah (E) ..	I
106	Md. Asrafuddin (E) ..	II
107	Ahamed Ali (E) ..	II
110	Md. Sayad Ali (E) ..	II
	Joynagar U. P.	
112	Abdul Mataleb Dafadar (E) ..	II
	Shibanandakathi U. P.	
114	Kazi Abdur Rajjak (E) ..	I
	Holatola U. P.	
116	Akkas Ali Sardar (E) ..	I
	Jalalabad U.P.	
119	Chand Ali Mondal (E) ..	I

Roll No.	Name.	Division.
	Kalaroa Practising U. P.	
120	Tohider Rahaman Mirdah (E) ..	I
121	Sakatulla Mandal (E) ..	II
	Tulshidanga U. P.	
123	Kazi Rasiduzaman (E) ..	II
	Gangnia Mahmudpur U. P. Maktab.	
125	Md. Akbar Ali (E) ..	I
127	Md. Lakman (E) ..	II
128	Md. Ruhul Amin (E) ..	II
	Ghonabeshepara U. P. Maktab.	
131	Md. Mufazzal Gain ..	I
	Agardari U. P. Maktab.	
132	Sardar Abdur Rahim (E) ..	I
133	Sardar Jasimuddin (E) ..	I
134	Gazi Hossain Ali (E) ..	I
	Baladanga U. P. Maktab.	
135	Md. Hossain Ali ..	I
137	Md. Musharraf Hossain (E) ..	I
	Digang U. P. Maktab.	
138	Mujibar Rahman Dalal ..	II
	Kakdanga U. P. Maktab.	
139	Md. Imam Ali Sardar (E) ..	II
140	Md. Abdul Aziz Gazi (E) ..	I
	Nagarghata Rahmatia U. P. Maktab.	
141	Md. Mufizuddin Khan (E) ..	I
142	Md. Abdul Aziz Mandal ..	I
	Nagarghata North U. P. Maktab.	
143	Md. Ismail Sardar (E) ..	I
145	Shaikh Md. Shamsuddin (E) ..	II
	Budhata U. P. Maktab.	
148	Nasiruddin Ahmad (E) ..	I
149	Shaikh Sukhjan Ali (E) ..	I
150	Abul Bashar Mafizuddin Ahmad (E) ..	II
151	Md. Abdus Sobhan (E) ..	II
153	Abul Khayer Md. Azizur Rahman (E) ..	I
154	Md. Sanaullah (E) ..	II
155	Md. Sayed Ali (E) ..	II
	Gunakarkati U. P. Maktab.	
156	Mistri Munsef Ali (E) ..	I
	Uttar Chapra U. P. Maktab.	
158	Md. Golam Akbar ..	II
160	Md. Nesaruddin ..	II
	Gobardari U. P. Maktab.	
161	Md. Abdul Aziz (E) ..	I
	Alipur Roasatia U. P. Maktab.	
166	Md. Abdul Jabbar ..	I
167	Md. Syedar Rahman (E) ..	II

Roll No.	Name.	Division.
	Dakshin Sripur Centre.	
	Mahatpur U. P.	
1	Bholanath Sen (E)	II
	Dhalberia U. P.	
2	Kumari Sarayu Bhattacharji (E)	I
3	Kumari Pratima Ghose (E)	I
4	Arunkumar Mukherji (E)	I
6	Kalidas Ghose (E)	I
	Deya U. P.	
7	Narendranath Ghose (E)	II
	Bagbati U. P.	
8	Haran Chandra Ghose (E)	I
	Bharasimla U. P.	
9	Pannalal Banerji (E)	I
10	Bijoylal Bose (E)	II
11	Hirankumar Bose (E)	I
12	Kalidas Bose (E)	I
	Dakshin Sripur U. P.	
13	Sadhu Charan Banerji (E)	I
14	Kalipada Chatterji (E)	II
15	Nirmalananda Banerji (E)	I
	Gobindakati U. P.	
17	Udhab Chandra Sarkar (E)	I
18	Harendranath Sen (E)	II
19	Gopalchandra Sarkar (E)	II
20	Kumari Promila Sundari Debi (E)	II
	Dhalberia U. P.	
21	Bimal Bihari Das (E)	II
	Benadana U. P.	
22	Manindranath Mondal (E)	I
	Bagbati U. P.	
24	Nitai Chandra Mandal	II
	Atulia U. P.	
25	Nim Chand Mondal (E)	I
	Khutikata U. P.	
26	Prahlad Chandra Mridha (E)	II
	Durgabati U. P.	
28	Amulya Krishna Mondal (E)	II
29	Sailendranath Haldar (E)	II
30	Jyotis Chandra Biswas	II
	Nurnagar F. U. P.	
32	Surendranath Nath (E)	I
	Kasimari U. P.	
33	Harendranath Sardar (E)	I
34	Monimohan Biswas (E)	I

Roll No.	Name.	Division.
	Harinagar U. P.	
35	Harendra Nath Mondal (E)	I
36	Upendra Nath Mallick (E)	I
37	Behari Lal Mondal (E)	I
38	Jyotindra Nath Mondal (E)	II
39	Thakur Charan Mondal	II
40	Bepin Behari Mondal (E)	I
	Natana U. P.	
41	Subal Ch. Golder (E)	II
42	Kalihar Sarker	II
43	Kalipada Sarker (E)	II
	Sadar Bedkasi U. P.	
44	Sanatan Mandal (E)	II
46	Nani Gopal Mandal (E)	II
	Mahatpur U. P.	
47	Sheikh Mahtabuddin (E)	I
	Deywa U. P.	
52	Md. Abdul Mannaf Sardar (E)	I
	Dakshin Sripur U. P.	
53	Abdin Karikar (E)	I
54	Sultan Karikar (E)	II
	Kasimari U. P.	
55	Md. Golam Rohman Mandal (E)	I
56	Md. Baburali Mollah (E)	I
57	Md. Golam Mowla Gazi	II
58	Md. Mominar Rohman Mondal (E)	II
	Natna U. P.	
59	Ayejuddin Sardor (E)	II
	Sadar Bedkasi U. P.	
60	Moser Ali Sardor (E)	I
61	Munshi Najibar Rahman (E)	II
62	Mosammat Saburunnessa (E)	I
	Godara U. P. Maktab.	
63	Md. Elahi Baksha (E)	I
64	Md. Shaharali (E)	I
65	Md. Nooral Haque (E)	I
67	Md. Shujaat Ali (E)	II
68	Md. Nesaruddin (E)	I
	Burakhansaheberati U. P. Maktab.	
74	Md. Belayet Ali (E)	I
75	Md. Ruhul Kuddus (E)	I
	Kashimari U. P. Maktab.	
76	Md. Azizur Rahman (E)	II
	Patakhali U. P. Maktab.	
77	Md. Tasman Ali (E)	I
79	Md. Tamizuddin (E)	I
80	Md. Osman Gani (E)	I
81	Md. Shahar Ali (E)	I
82	Md. Abdul Khalek (E)	I
	Gabura U. P. Maktab.	
83	Md. Kazem Ali (E)	I
84	Md. Noorul Haque (E)	I

J. G. SEN, for *Inspector of Schools.*

Dacca Division.

Dacca, the 22nd December 1934.

List of successful candidates in the Primary (Maktab) Final Examination, 1934.

I indicates 1st Division.
II indicates 2nd Division.

Candidates marked with asterisks have passed in English optional.

Dacca District.

Dacca Normal School Centre.

Roll No.	Name.	Division.
	Municipal Free Primary School, Mahuttuly.	
1	*Saheb Zada	I
2	*Nezamuddin Ahmed	I
3	*Abu Muhammad Nural Huq	II
4	*Abdul Qayum	I
5	*Sheikh Kashem Ali	I
7	*Muhammad Zobaid Ali	I
9	*Sachindra Kumar Dutta	I
10	*Abul Hassan	I
11	*Abul Kashem	I
12	*Nripati Ranjan Sen	I
13	*Satya Narayan Das	I
14	*Bahauddin Ahmed	II
15	*Md. Ali Hossain Fakir	I
70	*Md. Mazibur Rahman	II
	Jagat Mohan Primary.	
16	*Kali Das Saha	I
17	*Chittaranjan Saha	I
18	*Dina Nath Das	I
19	*Pran Gopal Saha	I
20	*Banka Bihari Saha	I
21	*Gour Ch. Gope	I
22	*Anil Kumar Saha	I
23	Pran Gopal Das	II
24	*Hari Das Saha (I)	I
25	Hari [illegible] Saha (II)	I
26	*Jadhabi Lal Saha	II
	Lakshmibazar Primary.	
33	Surendra Lal Basak	I
34	Nani Bala Das	I
	Musharikhola Board Primary.	
36	Khagendra Ch. Sarker	II
37	Manindra Ch. Sarker	II
38	Sheikh Alauddin	II
	Bangshal Islamia Maktab.	
39	*Md. Sona Mia	I
40	*Md. Shaukat Ali	I
41	*Md. Jabar	I
42	*Rukanuddin	I
43	*Suba Mia	I
	Mograkanda Maktab.	
44	Ahammad Ali	I
45	Muhammad Chand Mia	II
	Gournagar Maktab.	
46	Belayet Hossain	II
	Khagaria Maktab.	
50	Abdul Latif	I
52	Habibur Rahman	II
	Chakulia Board Primary.	
53	Rohitaswa Ghosh	II
54	Azizur Rahman Khan	II
55	Nanigopal Saha	II
56	Samod Ali Molla	II

Roll No.	Name.	Division.
	Nazirpur Board Primary.	
58	Abdul Hafiz	I
59	Abdul Kaddus	I
60	Abdul Hamid	I
62	Md. Shamsuddin	I
	Lalbag Maktab.	
63	*Md. Aliullah	II
64	Md. Abdul Safique	II
	Baimail Primary.	
67	*Rammohan Roy	II
	[illegible]angalabazar Primary.	
71	Purna Chandra Paul	II
	Dailbazar Primary.	
72	*Kanai Lal Das	II
73	Kali Charan Saha	II
74	*Narayan Ch. Gope	II
	Daultibazar Primary.	
75	*Krishna Lal Gope	I
76	*Matilal Das	I
77	*Mani Lal Das	I
	Faridabad Primary.	
78	*Ganga Ch. Saha	II
79	*Nanda Lal Saha	II
	Gutia Primary.	
80	*Subal Chandra Maitra	I
	Hyderabad Maktab.	
81	Niajuddin Ahmed	II
	Singhasri Primary.	
82	Sitanath Das	I
	Baraid Primary.	
83	Ramesh Ch. Sil	II
	Palasona Board Primary.	
84	*Madhavananda Mondal	I
85	*Suresh Ch. Ghosh	I
	Dhirasram Board Primary.	
88	Md. Asrafali	II
89	*Md. Fazlar Rahman	II
	Ulusara Board Primary.	
96	*Ramani Raman Roy	II
97	*Ranendra Ch. Das	II
	Sonarua Primary.	
98	Afia Khatun	I
99	Abdul Hakim	I
100	Abdul Kuddus Majhi	II
	Taltala Maktab.	
103	Abdur Razzaque	I
104	Abdul Hamid	I
105	Nurul Islam	II
	Bartha Board Primary.	
106	Abul Hossain	II
107	Rasuluddin	I

Roll No.	Name.	Division.
	Bhringraj Tekerbari Primary.	
110	*Hirendra Nath Guha ..	I
111	Rai Kisore Pal ..	II
112	Arun Chandra Saha ..	II
113	*Radha Gobinda Pal ..	II
114	*Abdul Mannaf Bakshy ..	II
	Kaliakair Board Primary.	
115	*Abdul Aziz ..	I
116	*Chand Muhan Nama Das ..	I
117	*Bhupesh Ch. Chakrabarty ..	I
	Pabrail Boys' Primary.	
123	Md. Mangal Ali ..	II
	Hazipur Primary.	
127	Jatindra Muhan Pal ..	I
128	Bhupendra Ch. Pal ..	II
129	Saheb Ali ..	II
	Dacca Government Moslem High School Centre.	
	Agla Board Primary.	
1	*Fatik Chandra Das ..	I
	Jinjira P. M. Primary.	
2	*Gopinath Das ..	I
3	*Joynal Abedin ..	I
4	*Sris Chandra Malla ..	I
6	*Abdul Alim ..	I
7	*Mahim Chandra Das ..	I
	Potkajore Board Primary.	
10	*Din Muhammad ..	I
13	Md. Abdul Gani ..	II
14	*Madhu Sudan Mandal ..	II
17	Ram Govinda Pal ..	II
	Syedpur Board Primary.	
19	Sontosh Kumar Saha ..	II
22	Md. Maminali ..	II
	Ati Nayabazar Board Primary.	
27	Sontosh Chandra Sarkar ..	I
28	Mukter Hossen ..	II
30	Serajuddin ..	II
	Pankunda Primary.	
41	*Sheik Nowabali ..	I
42	*Sheik Abdul Khalek ..	I
44	*Jagadish Chandra Datta ..	II
	Goalnagar Primary.	
45	*Sheik Abdul Latif ..	I
46	*Narendra Mohan Roy ..	I
47	*Kali Prasanna Mukherji ..	I
49	*Radhasyam Roy ..	I
	Abdullapur Primary.	
51	*Mosammad Anwara Begum ..	I
52	*Muhammad Ali Mea ..	I
53	*Nuruddin ..	I
	Joynagar Monoharia Primary.	
60	Karamali ..	I
62	Rajabali ..	I
	Madhurchar Primary.	
63	Abdus Samad ..	II
64	*Iadali Molla ..	I
	Rohitpur Fishery School.	
67	Syamdhan Rajbanshi ..	I

Roll No.	Name.	Division.
	Ikoria Maktab.	
78	*Abeda Khatun ..	I
	Doleswar Maktab.	
79	Md. Manirul Islam ..	I
	Chandipur Maktab.	
81	Shahabuddin Ahmed ..	II
	Uttar Baherchar Maktab.	
87	*Mosammad Amirunnesa ..	I
88	*Mosammad Anwara Khatun ..	I
	Baktarpur Maktab.	
89	Kulsum Khatoon (I) ..	I
90	Akibond Khatoon ..	I
91	Kulsum Khatoon (II) ..	I
	Uttar Dewara Maktab.	
92	Shamsuzzaban ..	I
	Punshahi Maktab.	
93	Abdul Jabbar Khan ..	I
94	*Abul Barkat Sarkar ..	II
96	*Monorama Sundari Das ..	I
	Balia Maktab.	
99	Khodiza Akter Khatoon ..	II
	Baoni Maktab.	
104	Abdur Rashid ..	I
	Basia Primary.	
106	*Dhirendra Chandra Das ..	I
107	Sachindra Chandra Sukladas ..	I
108	*Nanigopal Roy ..	I
109	Shudhendra Kumar Roy ..	II
111	Dayal Chandra Das ..	II
112	Paresh Chandra Bhowmic ..	II
	Lohar Kanda Primary.	
114	*Gopal Chandra Choudhury ..	I
115	*Upendra Chandra Das ..	I
116	*Haripada Das ..	I
118	Manindra Chandra Sutradhar ..	I
120	Mafizuddin Khan ..	I
	Beka Sahara Primary.	
124	Khagendra Chandra Chanda ..	II
	Destala Board Primary.	
125	*Jatindra Chandra Paul ..	II
127	*Shailendra Chandra Datta ..	I
	Nandia Sangun Board Primary.	
130	*Ahamed Ali Meah ..	II
	Barni Board Primary.	
134	*Birendra Krishna Choudhury ..	II
	Bindubashi Primary.	
135	Hafeza Aktar Khatoon ..	I
	Charchalana Maktab.	
137	Muhammad Minnat Ali ..	II

Roll No.	Name.	Division.
	Narayanganj H. E. School Centre.	
	Nitaiganj Primary.	
1	Idris Ali	II
2	Serajuddin	II
	Nabinagar Board Primary.	
3	Md. Habibur Rahman	II
4	Md. Serajuddin	II
	Chengakandi Board Primary.	
6	Asmat Ali	I
7	Fajar Ali	I
	Hamsadi Primary.	
8	Saroj Ranjan Das Gupta	I
	Perabo Board Primary.	
11	*Abdul Malek Mollah	I
12	*Masudennesa Khatun	I
	Panchabati Primary.	
14	*Rajendra Ch. Datta	I
	Shumirpara Primary.	
16	*Satish Chandra Roy	II
	Ribon Primary.	
17	*Jogendra Chandra Saha	II
	E. Sanmandi Primary.	
21	Mahammad Ali	I
22	Abdur Rahman	II
	Basaba Maktab.	
25	*Khorshedennesa	I
26	*Arazennesa	I
27	Muktasurennesa	II
	Amgaon Maktab.	
30	*Arjuda Khatun	I
31	*Anwar Ali Mollah	I
	Lakshankhola Maktab.	
33	Abdul Waheb	II
35	Md. Chanda Mia	II
	Paikpara Maktab.	
36	Md. Ramizuddin	II
37	Md. Zaker Hosen	II
38	Md. Sonaullah	II
	Shakhertek Maktab.	
39	*Abdul Majid	I
40	*Abdul Kader	II
41	Kobbad Hosen	II
	Bhulta F. Primary.	
45	*Khitish Chandra Mahatta	I
46	*Shahidulla Mia	I
47	*Jogendra Chandra Deva Nath	I
48	*Mukshed Ali Mia	I
49	*Nitai Chandra Pal	I
50	Jatindra Chandra Deva Nath	I
51	*Ramesh Chandra Deva Nath	I
	Telaitola Board Primary.	
52	*Md. Kabir	I
53	*Abdul Ahid Khan	I
54	*Mahammad Ali	I
55	Johar Ali	I
56	*Newaz Ali	I

Roll No.	Name.	Division.
	Adhira F. Primary.	
57	*Khownish Chandra Some	I
58	Sremati Abharani Some	II
59	*Chittaranjan Some	I
60	Eusuf Ali Bhuya	II
61	Abdul Maleque Mia	II
	Bhulabo F. Primary.	
63	Madarbaksh Mia	I
64	*Purnya Chandra Pal	II
	Birinda F. Primary.	
65	Sremati Priyabala Mitra	I
66	Sremati Parul Bala Datta	I
67	Dinesh Chandra Datta	I
68	Matibor Rahman Mia	I
69	Sukharanjan Dey	I
	Srenibashdi Board Primary.	
72	Md. Adam Ali	II
	Satgram Board Primary.	
76	*Maran Chandra Biswas	I
77	*Syedur Rahman	I
	Monohardi Shikhya Mandir.	
78	*Satish Ch. Das	I
80	*Gouri Kishore Shaha	I
82	*Chitta Ranjan Chakraverty	I
84	*Khalilur Rahman	I
	Haijadi Board Primary.	
85	*Kamarajjaman Mia	I
87	*Badsha Mia	II
	Brahmangaon F. Primary.	
88	*Ramhari Shaha	I
89	*Jaganath Shaha	I
90	*Krishna Chandra Dutta	I
91	*Sachindra Mohon Das	I
	Rupshi Board Primary.	
92	*Moran Chandra Shaha	I
94	*Goshai Das Shaha	I
95	*Hare Krishna Shaha	I
96	*Noor Mahammad Molla	I
	Baraipara F. Maktab.	
99	Md. Akkas Ali	I
100	Abdur Razak	I
101	*Khalilur Rahman	II
	Naora F. Maktab.	
103	Abhi Manya Chandra Rudra Pal	II
	Chaitankanda F. Maktab.	
105	Ramizuddin Bhuya	II
	Tilchandi F. Maktab.	
108	Mohammed Ali	II
	Ezarkandi Maktab.	
109	Amzad Hossain	II
	Panch Mukhi F. Maktab.	
111	*Abdul Haque Mia	I
	Nawgaon F. Maktab.	
115	Md. Musa Molla	I
	Bianandi F. Maktab.	
117	*Md. Abdul Waheb	I
118	*Mafizul Islam Choudhury	I
119	*Md. Nural Islam	II

Roll No.	Name.	Division.
	Tatia F. Maktab.	
121	Abdus Samad Molla ..	I
	Daudpur F. Maktab.	
123	Rafizuddin Bhuya ..	I
	Baralu F. Maktab.	
124	Samser Ali Molla ..	II
	Adharia U. P.	
126	Laksmi Devi ..	I
	Adiabad H. E. School Centre.	
	Hashnabad Board Primary.	
4	*Md. Samsul Haque Bhuiyan (No. I) ..	I
5	*Abdul Khaleque ..	II
6	*Md. Dhanu Miah ..	II
	Gakulnagar Board Primary.	
8	Nasiruddin ..	I
	Srerampur Primary.	
11	Ayesha Khatoon ..	I
13	Rawsanara Khanam ..	I
14	Saminaunessa ..	II
16	Ramizuddin ..	II
17	*Hafizuddin ..	I
	Mirzanagar Primary.	
18	*Tarinimohon Devnath ..	I
19	Safiuddin ..	II
20	*Sahajuddin ..	II
21	*Quat Ali ..	II
22	*Tajuddin ..	II
	Marjal Maijpara Primary.	
25	*Abdul Bari ..	I
27	*Abdul Awal ..	I
28	Umesh Chandra Modak ..	II
29	*Nurali ..	I
	Nilakhidarigaon Primary.	
30	*Sultan (No. I) ..	II
31	*Sultan (No. II) ..	I
	Brahmanertek Primary.	
32	*Abdul Kadir ..	II
33	*Nripendra Chandra Pal ..	II
	Batialy Primary.	
34	Surendra Ch. Sutradhar ..	I
	Bakharnagar Primary.	
35	Nagarbashi Barai ..	I
	Srinidhi Primary.	
36	Amulya Kumar Bhadra ..	II
	Telipara Maktab.	
37	*Meherunnessa ..	I
38	*Faizunnessa ..	I
39	*Amena Khatoon ..	I
40	*Ayemannessa ..	I
41	*Taibunnessa ..	I
42	*Akkas Ali ..	I
43	*Hafizuddin ..	II
44	*Minnat Ali ..	I
	Bakharnagar Maktab.	
45	Abdur Rashid ..	II
46	Ali Noaz ..	II

Roll No.	Name.	Division.
	Ratanpur Maktab.	
50	*Mafizuddin Ahmed ..	I
53	Sabdarali ..	II
	Palashtaly Maktab.	
55	*Md. Syed Ali ..	I
	Dhukundi Maktab.	
58	Abdul Gani ..	II
	Sherajnagar Primary.	
62	Joynabennessa ..	I
63	*Jumadennessa ..	I
64	*Khodeja Khatun ..	I
	Nilakhia Primary.	
65	*Md. Serajul Huq ..	I
66	*Md. Bashiruddin ..	I
67	*Mussammat Ayesha Aktar Khatun ..	I
68	*Amena A'ktar Khatun ..	I
	Mazuband Primary.	
69	Suresh Chandra Mallik ..	II
	Bakharnagar Maktab.	
71	Bepin Chandra Barman ..	II
72	*Mussammat Meherunnessa ..	I
	Nilakhia Primary.	
81	*Md. Raihanuddin ..	I
	Baghaikandi Primary.	
82	*Shuruj Mean ..	I
	Sarrabad Board Primary.	
85	*Jiauddin Ahmed ..	I
86	*Serajul Islam ..	I
88	*Md. Chand Mean ..	I
	Raipura Practising Primary.	
91	Gouranga Chandra Saha ..	I
92	Jogesh Chandra Saha ..	I
93	Montajuddin Ahmed ..	I
95	Haripada Acherji ..	I
96	Kshetramohon Saha ..	I
	Baherchar Maktab.	
97	Afia Aktar Khatun ..	I
	Saidabad Board Primary.	
98	Abdul Majid ..	I
99	*Abdul Hashem ..	I
	Rajadi Board Primary.	
105	*Sadeker Rahman Khan ..	I
106	*Modasser Hussain Khandakar ..	I
107	*Md. Manjurul Huq Bhuiya ..	I
108	Alfazuddin ..	I
109	*Nepal Chandra Saha ..	I
110	*Abdul Quddus ..	I
111	*Priyanath Das ..	I
112	*Abdul Batan Khan ..	I
113	*Bhabesh Chandra Naha ..	I
	Godairchar Maktab.	
115	*Md. Hafizuddin ..	I
	Brahmandi Primary.	
116	*Radhamohan Malakar ..	I
118	*Tirtha Bhusan Saha ..	I
	Nabipur Maktab.	
119	Abdur Rashid ..	I

Roll No.	Name.	Division.
	Narsingdi Bowpur Primary.	
121	Boladev Chandra Saha ..	I
122	Rash Behari Das ..	I
	Kanthalia No. 2 Maktab.	
124	*Md. Jalaluddin ..	I
	Shahiprotap Primary.	
126	Sunil Kumar Sarkar ..	I
	Chaitabo Primary.	
131	*Suresh Chandra Chakraverty ..	I
132	*Ranjit Kumar Paul ..	I
	Transferred from the Lakhpur Simulia H. E. School Centre.	
	Hizalia Boys' Maktab.	
6	Maherunnessah ..	II
7	Jarina Khatoon ..	I
	Bhangortok Maktab.	
23	Mosammat Fatema Zohara Khatoon ..	I
	Azakitala Primary.	
34	Mosammat Jamila Khatoon ..	I
	Lakhpur Simulia H. E. School Centre.	
	Hizalia B. M.	
1	Muslehuddin Bhuia ..	I
2	Shamsul Huq ..	II
3	Makaruddin Bhuia ..	II
	Ghagatia Maktab Final.	
10	*Afsaruddin Bhuia ..	I
11	*Abdur Rashid Khan ..	I
12	Miar Hossain ..	II
14	*Md. Sultan ..	II
	Haran Khala B. P.	
15	Dhirendra Ch. Chakrabarty ..	I
	Uttar Salharchar B. P. No. II.	
16	*Ramizuddin Khan ..	I
	Birkhupi B. P.	
17	Jinnat Ali ..	II
	Nawkaghata B. P.	
18	Abdul Gafur ..	I
	Bhangertok Boys' Maktab.	
19	Abdul Waheb ..	I
20	Ahmmad Ali ..	I
	Telia B. P.	
26	Sadat Ali ..	II
	Jallara M. Primary.	
31	Mizanur Rahman ..	I
	Kharia B. M.	
32	Aziruddin Khan ..	I
	Dargarband B. P.	
33	Md. Abdul Kader Bhuia ..	I

Roll No.	Name.	Division.
	Azatitala B. Primary.	
36	Rasharaz Ch. Das ..	II
	Kharia Board Primary.	
37	Chandra Mohan Sutradhar ..	I
	Dattergaon Bhitipara U. P.	
40	Abdul Muttalib Khan ..	II
	Jhawakandi U. P.	
41	*Safiuddin Ahmed ..	I
42	*Abdul Majid ..	II
43	*Jnan Ch. Sutradhar ..	I
	Saidenkhola Circle Primary.	
47	*Matiar Rahman	I
	Charkarardi Boys' Primary.	
48	*Mahiuddin Bhuia ..	I
	Kamargaon G. S. Maktab.	
50	*Md. Serajuddin ..	I
51	*Dudu Mian ..	II
	Karardi U. P.	
55	*Atul Chandra Dhar ..	II
	Baruigaon B. P.	
59	Dhanuraddin Ahmed ..	II
	Bhurbhunia Board Primary.	
63	Sahajuddin Bhuia ..	II
	Montola Primary.	
64	*Md. Ataur Rahman ..	I
65	*Md. Abdus Sayed ..	I
66	*Shamsheruddin Ahmed ..	II
	Kachikata Board.	
71	Abu Sayed Md. Hussain ..	II
72	Md. Chando Ali ..	II
73	Ziauddin Ahmed ..	II
	Charnarandi Maktab.	
74	Md. Ashraf Ali ..	II
76	Md. Ibrahim ..	II
	Sukandi Maktab.	
77	Md. Amir Ali ..	I
	Birgaon Board.	
80	Md. Ramzan Ali ..	I
	Bajnabo Maktab No. I.	
90	Syed Mahtabuddin Ahmed ..	I
91	Md. Shahidulla ..	II
	Munshiganj Centre.	
	Nutoon Baloor Char K. M. Maktab.	
1	*Abdul Manaf ..	I
3	*Newaz Ali ..	II
	Shialdi Maktab.	
4	Ismail Haldar ..	I
5	Munsoorali Mullah ..	I
	Kathalbarir Char Maktab.	
8	Aminul Haque ..	II

Roll No.	Name.	Division.
	Courtgaon Maktab.	
10	Noorul Haque ..	II
	Rajarchar Maktab.	
11	*Abdur Rab ..	I
	Suapara Primary.	
12	Joydeb Das ..	I
14	Dinesh Chandra Datta ..	II
15	Sontosh Chandra Sutradhar ..	I
	Moheshpur Primary.	
16	*Anwarullah ..	I
	Idrakpur Primary.	
18	*Krishnadhan Pal ..	I
	Bajrajogini Primary.	
19	*Haripada Datta ..	II
22	*Bimal Ranjan Basu ..	II
	Syedpur Board Primary.	
26	Yeud Ali Bhuiya ..	I
27	Monobbar Hossen Miah ..	II
	Basukgram Primary.	
28	*Majida Khatun ..	I
	Kamarkhara Primary.	
30	*Gouranga Chandra Malakar ..	I
31	*Muksud Ali Zamaddar ..	I
33	Goshtha Behari Paul ..	II
	W. Baharak Primary.	
37	*Arun Chandra Das Gupta ..	I
38	*Kanailal Das ..	I
39	*Anupama Kundu ..	I
40	*Jotirmayee Debi ..	I
41	*Birendra Chandra Das ..	I
42	Hari Das Saha ..	I
43	*Serajul Islam Mia ..	I
44	*Afazuddin Mia ..	I
45	*Mafizuddin Mia ..	II
46	*Hajrat Ali Mia ..	II
47	*Chittaranjan Paul ..	II
	Mandra Board Primary.	
48	Abdul Latiff Khan ..	II
	Dighirpar Board Primary.	
49	Md. Rostom Ali Kaji ..	I
	Kaichail Board Primary.	
51	*Debi Das Chandra Chatterji ..	II
52	*Tara Prasanna Banerji ..	II
54	*Gopal Chandra Nandi ..	II
	Aporkathi Board Primary.	
55	*Debendra Chandra Nath ..	I
56	*Rabindra Nath Datta Sarma ..	II
57	*Sachindra Mohon Nath ..	I
59	*Chitta Ranjan Sen Gupta ..	II
	Satgharia Primary.	
60	Habibur Rahman Molla ..	II
	Hat Khon Board Primary.	
61	Md. Answar Ali Sikdar ..	I
63	Budh Muhammad Mridha ..	II
64	Gol Mammud ..	II

Roll No.	Name.	Division.
	Baghia Primary.	
65	*Nityananda Patikar ..	I
66	*Narayan Chandra Mukherji ..	II
	Kolma Primary No. 2.	
68	Adyuita Chandra Rudrapal ..	II
	Nawpara Maktab.	
71	*Bajlur Rashid Mia ..	I
72	Sheikh Ofazuddin ..	II
	Belua Amtali Primary.	
81	Guru Das Gope ..	II
	Boiragadi Primary.	
83	*Dhiresh Chandra Ghose ..	II
84	*Manindra Kumar Das ..	I
85	*Jagabandhu Pal ..	II
86	Md. Abdul Samad ..	I
	Pauldia Primary.	
89	*Makbul Hossen Khan ..	I
90	Govinda Chandra Pal ..	II
	Chandandhul Primary.	
93	*Narendra Kumar Chakravorty ..	I
95	*Devendra Chandra Das ..	I
	Syamsidhi Primary.	
97	*Priyanath Mandal ..	I
	Chhota Pauldia Primary.	
98	*Kartik Chandra Datta ..	II
99	Sachchidananda Datta ..	II
100	*Nisi Kanta Das ..	II
	Srinagar Primary.	
101	Jogesh Chandra Gope ..	I
	Tingaw Primary.	
104	Pran Krishna Kunda ..	II
	Atpara C. Primary.	
107	Gour Binod Sil ..	II
108	Haripada Sil ..	II
	Kadisal Primary.	
109	*Biswambhar Rudra Pal ..	II
	Ghoramara Primary.	
110	Nibaran Chandra Roy ..	II
	Pania (Brahmankhola Primary).	
113	*Narayan Chandra Pal ..	I
	Chitrakote Primary.	
117	*Gosaidas Mandal ..	I
	Malkhanagar Primary.	
120	Narayan Chandra Do ..	I
	Sondhardia Primary.	
124	*Nagendra Chandra Samajik ..	II
	Kakaldi Board Primary.	
125	*Khodiza Khatun ..	I

Roll No.	Name.	Division.
	Fursail Primary.	
127	*Debi Prosad Roy	I
128	*Rabindra Kishore Roy	II
129	Lakshman Chandra Kundu	II
	Champakoli Primary.	
132	Byomkesh Chatterjee	I
133	Dinesh Chandra Das	I
	Nateswar Primary.	
134	*Jajneswar Sutradhar	I
	Nayagaw Primary.	
135	Hari Prasad Mandal	I
	Manikganj Centre.	
	Balirtikar Primary.	
1	Hiralal Sarkar	II
	Borahirchar Primary.	
2	Md. Sonamuddin	I
	Barundi Board Primary.	
4	Mangal Chandra Roy	II
	Tillirchar Primary.	
5	*Md. Alfazuddin Biswas	I
6	*Md. Afsaruddin	I
7	*Md. Sonaulla	I
	Sadarpur Primary.	
8	Jiban Krishna Saha	I
9	Yotish Chandra Das*	II
	Tillisirta Sundari Primary.	
11	Digindranath Pal	I
	Baliati Akhara Primary.	
12	Jogesh Chandra Chakraverty	I
	Paulshura U. Primary.	
16	*Md. Abdus Chhattar	I
17	*Md. Hekmat Ali	I
	Kaitara Primary.	
19	Jahuruddin	II
	Deghulia Kalibari Primary.	
20	*Bhagirath Chandra Shaha	I
21	*Haripada Shaha Mandal	I
22	*Fanindra Mohon Shaha	I
23	*Ramesh Chandra Shaha	I
24	*Ramesh Chandra Das	I
25	Chandra Nath Shaha Roy	II
	Baraid Board Primary.	
30	Abul Kashem Khan Mazlis	II
31	Eklash Ali Khan	II
	Chailla Board Primary.	
33	Jiban Chandra Mandal	II
	Bandutia Primary.	
34	Sekendar Ali	II
35	Md. Hashemuddin	I
36	Abdur Rahman	I
	Tasbidanga Primary.	
40	*Abdur Razzak Khan	I
	Kalta Boys' Primary.	
41	*Borhanuddin Molla	I
42	Shaikh Hashem	I
43	Bijoy Govinda Saha	II
	Kanchanpur Boys' Primary.	
44	*Aminuddin Biswas	I
45	*Kasaruddin Biswas	I
46	*Pulin Behari Sarkar	I
	Kuthirhat Board Primary.	
48	*Jagadiswar Roy	II
49	Fanibhusan Dey	II
51	Bejoy Gopal Ghosh	II
52	Jagat Bandhu Dey Sarkar	II
53	Karnadhar Halder	II
54	Manik Chandra Sil	II
	Noaddu Board Primary.	
58	*Abul Kasem Bepari	I
59	*Ayesha Khatun	I
60	Ramesh Chandra Saha	II
	Matikata Boys' Primary.	
63	Md. Sayed Ali	I
64	Md. Khejmat Ali	I
	Baimailo Primary.	
65	*Tasiruddin Dewan	I
66	Shaikh Md. Ali	I
67	Kasimuddin Dewan	II
68	Shaikh Shamsuddin	I
70	*Elahi Baksh Dewan	I
	Golaidanga Primary.	
74	Shaikh Hayet Ali	II
	Charmajlishpur Maktab.	
76	Alauddin Ahmed	II
	Ghariala Primary.	
77	Kalachand Singh	II
	Bishnupur Board Primary.	
78	Sashi Bhusan Datta	I
	Paragram Board Primary.	
80	Nanibhusan Sirkar	I
81	Jagatdas Balo	II
	Hatail Madupur Primary.	
84	Subal Chandra Saha	I
85	Nedhuban Karmakar	II
	Talukhapania Primary.	
86	Md. Aladutali Khan	II
	Tara Primary.	
87	Radhika Lal Saha	I
88	*Ajit Kumar Sutradahar	I
89	Billadal Bysak	II
	Helachia Primary.	
90	*Rakhal Chandra Saha	I
	Kundaria Primary.	
91	Radhaballav Sircar	II
	Manhati Board Primary.	
92	*Satish Chandra Saha	II

Roll No.	Name.	Division.
	Special Centres - Dacca District.	
	Ramjanbeg Maktab Special Centre.	
	Ramjanbeg Maktab.	
9	Nur Jahan Begum ..	I
	Tetia Maktab Special Centre.	
	Tetia Final Maktab.	
128	*Hamida Akhtar Khatun ..	I
	Saberdia Maktab Special Centre.	
	Saberdia Maktab.	
86	*Musammat Afzulannesa ..	I
87	*Musammat Fazilatunnessa ..	I
88	Musammat Mofizu Akhtar Khatun ..	I
89	*Khondakar Tabinda Akhtor Khatun ..	I
	Baznabo Maktab No. 2 Special Centre.	
	Baznabo Maktab.	
78	Syeda Nurunnahar Khatun ..	I
79	Musammat Rahamatnnessa ..	I
	Lakhpur Simulia Boys' Maktab Special Centre.	
	Alinagar Boys' Maktab.	
9	Salema Akhtar Khatun ..	I
	Simulia Boys' Maktab.	
54	Musammat Roushanara Begum ..	I
	Jhawakandi Boys' Primary Special Centre.	
	Jhawakandi Boys' Primary.	
28	Ayesha Akhtar Khatun ..	I
62	Monzemnessa ..	I
	Mymensingh District.	
	Mymensingh Centre.	
	Sutia Khali U. B.	
1	*Md. Abdul Khaleque ..	II
2	Md. Ichaque ..	II
3	Debendranath Shaha ..	II
4	*Md. Abdus Sobhan ..	II
5	Md. Altabali ..	II
	Keyot Khali U. B.	
6	*Sibnath Burman ..	I
7	*Md. Hasmatali ..	I
	Narayanpur U. B.	
8	Md. Akkasali ..	I
9	*Haradhan Ghosh ..	I
10	Kshitish Ch. Ghosh ..	I
11	Md. Abdul Ali ..	I
	Boyra U. B.	
12	Md. Tayab Ali ..	I
13	Md. Umar Ali ..	II
	Chatrapur U. B.	
14	Srinath Burman ..	II
15	Surja Kanta Namadas ..	II
16	Md. Kasimuddin ..	II
18	Md. Sukur Mahmud ..	II
	Bhalakhali U. B.	
22	Profulla Ch. Modak ..	II
	Khagdahari B. P.	
24	Abdul Mazid ..	II
25	Upendra Ch. Paul ..	II
	Borarchar B. P.	
26	*Nagendra Ch. Das ..	I
	Begunbari B. P.	
28	*Tarani Kanta Shaha ..	II
29	Nil Kanta Debnath ..	II
31	*Dulal Ch. Shaha ..	I
33	Md. Wazali ..	II
	Golabhit P. U.	
34	Mahammad Ali ..	II
35	Md. Abdul Hakim ..	II
	Kanthal B. P.	
36	*Dinesh Ch. Karani ..	I
37	*Bankim Ch. Debnath ..	I
38	Rabindranath Mondal ..	I
39	*Naliniranjan De ..	I
40	*Rohini Kumar Sarma ..	I
41	Md. Jubed Ali ..	I
	Kanihari Primary.	
44	Naliniranjan De Sarkar ..	I
45	*Chinta Haran Chakladar ..	I
46	Ramendra Mohan De ..	I
47	*Md. Abdul Motaleb ..	I
48	Md. Mamudali ..	II
49	*Kiran Ch. Pandit ..	I
50	Jnanesh Ch. Pandit ..	I
51	*Md. Shamsul Haq ..	II
	Katlasen Primary.	
52	*Raghunandan Shaha ..	II
	Mymensingh Town Pathsala.	
54	*Md. Siddique Hossain ..	I
55	*Md. Hossain ..	II
	Baghan Maktab.	
58	*Md. Akhtaruddin ..	I
59	*Md. Abdulali ..	I
60	*Md. Hasmatali ..	I
61	*Md. Aftabuddin ..	I
62	*Mahammadali ..	I
63	*Md. Ramijuddin ..	I
64	*Md. Abed Ali ..	I
	Uttar Dapunia Maktab.	
67	*Abdul Wazed Mulla ..	I
	Kawalti Maktab.	
68	Md. Nawabali ..	II
69	Md. Mafizuddin ..	II
	Katakhali Maktab.	
71	Promode Ch. Dutta ..	I
72	*Mahammad Ali ..	I
73	Md. Rostamali Mallok ..	I

Roll No.	Name.	Division.
	Beara Patuli Maktab.	
75	*Md. Elahe Baksha	I
76	*Md. Umedali	I
79	*Md. Abdul Hakim	I
	Dhanikhola Bhatipara Maktab.	
80	Md. Abdur Rahman	I
	Dhanikhola Simuliapara Maktab.	
81	Umesh Ch. Sarma	I
	Berrampur Charpara II Maktab.	
82	Md. Hatemali	II
	Salimpur P. U.	
84	Md. Abdul Khaleque	II
	Montola B. P.	
86	*Md. Mahiuddin Mia	I
87	*Md. Ishaqueali Mia	I
88	*Md. Chanali Mia	I
89	Md. Abedali Mia	I
90	*Dhirendra Ch. Nandi	I
	Jorebaria P. U.	
92	*Brojendra Mohan Shaha	I
93	*Abul Khayer Md. Abdul Mannan	II
94	*Mahendra Lal Shaha	II
	Chandabari Primary.	
96	*Sailendra Kr. Biswas	I
98	*Dharani Kanta Dutta	I
	Jhanka Primary.	
101	*Md. Mamtazuddin	II
	Nangulia Primary.	
105	*Srinibash Ch. De	I
	Taratigouripara U. P.	
106	*Jatindra Ch. De (I)	I
107	*Jatindra Ch. De (II)	II
	Mandalsen Primary.	
108	*Jagadish Ch. Datta	I
109	*Gourgopal Datta	II
	Banbangla Maktab.	
113	*Md. Moslemuddin Taluqdar	I
114	*Md. Wajuddin Talukder	I
	Khuksia Maktab.	
116	*Md. Belayet Hossain	I
117	*Md. Kamaruddin	I
118	*Md. Abdul Halim	I
119	*Md. Kalimuddin	I
	Chonder Maktab.	
120	*Md. Akinali	I
121	Md. Abdul Khair Shamsul Haq	II
122	Md. Iman Ali	II
	Matbari Maktab.	
127	Md. Rostom Ali	II
	Jaida Maktab.	
131	*Md. Hazrat Ali	I
	Jamtali Maktab.	
134	Md. Mizanur Rahman	II

Roll No.	Name.	Division.
	Gati P. U. Primary.	
136	Abdur Rahim Khan	II
	Baradaspara B. P.	
138	Md. Sahiruddin	II
	Haluaghat Model Primary.	
139	Surendra Chandra Pal	II
140	Sachindra Mohan Baisnab	II
141	*Bejoy Chandra Ganda	II
142	*Manindra Mohan Baisnab	II
	Bakshimul B. P.	
143	Balaram Ch. Rudrapal	I
	Kamaria B. P.	
145	*Satyendra Nath Banik	II
	Kanuhary Primary.	
151	*Bejonbala Das	I
	Rabirmara Primary.	
153	*Md. Abdul Aziz	II
154	*Moizuddin Ahmed	I
	Brahmankona P. U.	
155	Md. Momraz Ali	II
	Hossainpur Maktab.	
158	*Md. Sabedali Mian	I
159	*Shah Safiruddin Fakir	II
160	*Shah Abu Bakre Siddique	II
	Fulpur Maktab.	
162	Md. Abdus Sobhan	I
	Chatuliar Kanda Primary.	
164	Md. Wazedali Khan	II
	Bauihala B. P.	
166	Abdur Rahaman Mian	II
	Charpara B. P.	
169	*Md. Kasimuddin	II
	Rukonpur Board Primary.	
173	*Ahmed Ali	I
174	*Md. Ashraf Ali	I
175	*Md. Abdur Razzaque Akanda	I
	Dhurna Board Primary.	
176	*Md. Sahed Ali	II
178	*Md. Amir Ali	II
	Sarisha Board Primary.	
180	*Ramani Kanto Sil	I
	Bokainagar B. P.	
182	*Md. Lokman Hakim	I
	Mericherchar B. P.	
184	*Md. Mia Hosen Ali	I
185	*Md. Rajot Ali	I
	Sripur Jithoro Primary.	
190	*Ramesh Ch. Sutradhar	I
191	Md. Abu Taleb Sikder	I

Roll No.	Name.	Division.
	Dauki Maktab.	
198	*Md. Amiruddin	I
199	Md. Jasimuddin	II
	Durgapur Maktab.	
204	Md. Nadir Hossain	II
	Charshakchura Primary.	
206	*Md. Abdul Wahed	II
	Borail B. P.	
212	*Md. Abdul Khaleque	I
	Negoari Primary.	
213	*Fulla Ch. Das	II
216	Md. Abdul Aziz	II
	Satarabai Maktab.	
217	*Sudhir Ch. Chowdhury	I
218	*Md. Serajul Haque	I
219	Md. Amjad Ali	II
	Patleshi Maktab.	
220	Md. Abdul Aziz	II
	Charmasland Maktab.	
221	*Md. Nabir Hossain	I
	Dhopaghat Primary.	
223	*Md. Ayub Ali	I
224	*Abdul Hamid Fakir	I
	Rowha Primary.	
226	*Benoybhushan Das	II
227	*Jatindra Ch. Acharyya	II
	Rishabo Primary.	
230	Md. Halimuddin Sheik	I
231	*Digendra Ch. Sarkar	II
	Kadamrasulpur Maktab.	
232	*Md. Abdul Karim	I
	Charmasland B. P.	
238	*Md. Ketab Ali	II
239	*Md. Abdul Aziz	II
	Uthura Board Primary.	
240	*Upendra Ch. Roy	II
241	Surendra Ch. Ghosh	II
	Chandrapur Primary.	
242	Md. Serajuddin	II
243	*Md. Habibar Rahman	II
	Kalian B. P.	
247	Md. Ismail	II
	Barapara Maktab.	
249	*Abdul Khorshed	I
250	*Nural Amin	I
251	*Nani Gopal Bashak	I
252	*Nirode Baran Basak	I
	Kaliapara Primary.	
254	*Md. Abdul Hamid	II
255	*Aftabuddin Ahmed	I
	Shibnagar Boys' Primary.	
256	*Md. Abdul Aziz	I
257	*Dwijendra Ch. Mazumder	II

Roll No.	Name.	Division.
	Kishoreganj Centre.	
	Masimpur Board Primary.	
1	*Md. Abdul Hamid	I
2	*Md. Osman Gani	I
3	Esaqubali Bhuiya	II
4	*Md. Abdul Khaleque	I
5	*Karuna Kumar Sarcar	I
6	*Ramesh Chandra Kapali	I
7	*Durga Sanker Das	I
8	*Sukumar Chakraverty	I
	Nilganj F. Primary.	
10	*Sudhir Chandra Bhowmik	I
11	*Dinesh Chandra Namasarma	I
12	*Sukumar Das	I
13	*Khaleque Nowaj Khan	I
14	*Md. Azizur Rahman	I
16	*Md. Abdul Wahad Bhuiya	I
17	Md. Abdur Rahman	II
18	*Pramatha Nath Biswas	I
19	*Banabasi Mala Barman	I
20	Satish Chandra Bhoumik	I
21	Hem Chandra Das	II
	Barkhapan F. Primary.	
22	*Md. Abdul Jabbar	I
23	Birendra Chandra Dutta	II
24	Md. Shamsul Haque	I
	Harigati Board Primary.	
25	Md. Altafuddin Bhuiya	I
26	Md. Safiruddin	I
27	Md. Karamali Fakir	II
28	Md. Islamuddin Khan	II
29	Md. Idrisuddin Khan	I
	Patabuka Board Primary.	
30	*Surendra Chandra Mandal	I
31	Md. Abdul Hakim	I
32	Md. Sirazul Haque	I
33	Md. Torabali	I
	Noabari Board Primary.	
34	*Md. Maktub Hussain	II
36	Siddik Hussain Khan	II
37	Md. Gholam Hussain	II
38	Md. Abdul Khaleque	II
39	Sekandarali	II
40	Nizimuddin	II
41	*Satish Chandra Sukla Das	I
42	*Sasanka Kumar Roy	I
43	*Dinabandhu Mali	I
44	Hem Chandra Banikya	I
45	*Jagadish Chandra Paul	II
46	*Rajendra Chandra Paul	II
47	*Bibhuti Bhusan Paul	II
	Dhala Primary.	
48	Krishna Das Paul	II
49	*Harendra Chandra Paul	I
50	*Rabati Mohan Paul	II
51	*Birendra Chandra Paul	II
52	Shisu Ranjan Paul	II
53	*Jatindra Chandra Paul	II
	Rahimpur Maktab.	
54	Md. Abdur Rashid	I
	Charigaon Maktab.	
55	Md. Saiful Islam	II
56	Md. Abdul Makit	II
	Kamaliarchar Primary.	
57	Raisuddin	II
	Dighirpar Board Primary.	
60	Debesh Chandra Debnath	II

Roll No.	Name.	Division.
	Gobaria Board Primary.	
63	Abdul Wadud Bhuiya ..	II
64	Abdul Barik ..	II
	Alalpur Board Primary.	
67	Muslehuddin ..	II
	Shaharmul Board Primary.	
71	Shib Charan Das Sarcar ..	I
	Majlishpur Primary.	
75	*Md. Abdul Hashim ..	I
76	*Md. Aptar Hussain ..	I
77	Dinesh Chandra Saha ..	II
	Basantapur Primary.	
78	*Gopal Chandra Sukla Das ..	II
	Naogaon Maktab.	
82	*Md. Abdul Mannan ..	I
	Bahadur Primary.	
83	*Sunil Ranjan Das ..	I
84	Dhananjoy Chandra Gope ..	II
	Kabirkhandan Board Primary.	
87	Goaljar Khan ..	II
	Munurdia Primary.	
88	*Subodh Ranjan Bir ..	I
89	*Satish Chandra Barman ..	I
	Sukrabad Board Primary.	
91	Md. Azimuddin ..	I
	Chartaki Board Primary.	
92	Saidur Rahman ..	II
93	Md. Moslehuddin ..	II
94	Md. Abdul Kuddus ..	II
	Burudia Board Primary.	
99	*Md. Abdul Malek Khan ..	II
100	*Dhirendra Chandra Deb Nath ..	I
	Lohajuri Board Primary.	
101	*Md. Fayzul Haque ..	I
103	*Md. Afsaruddin Ahamed ..	I
104	*Emdadul Haque ..	I
106	*Md. Nazimuddin ..	II
109	*Md. Serazul Haque (II) ..	I
111	Md. Surur Mea ..	I
	Tarakandi Maktab.	
112	*Md. Torabali ..	I
	Char Kawna Primary I.	
113	*Abdul Hafez ..	I
114	Abdus Subhan ..	II
115	*Ansaruddin ..	I
	Kagarchar Maktab.	
116	Md. Abdul Majid ..	I
118	Md. Abdul Ali ..	I
120	Md. Abdul Wahab ..	I
	Ghagra Maktab.	
121	*Md. Sayamuddin ..	I
	Simulkandi Primary.	
123	Joy Gobinda Deb Nath ..	II
124	Rakhal Chandra Roy ..	II

Roll No.	Name.	Division.
	Nagergram Board Primary.	
125	*Md. Nuran Nabi Bhuiya ..	I
126	*Karim Nowaz Khan ..	II
127	*Binode Behari Roy ..	II
128	*Md. Suruzali ..	II
129	*Surendra Chandra Sutradhar ..	II
	Jangalia Board Primary.	
130	*Paresh Chandra Roy ..	II
	Naogaon Board Primary.	
131	*Hirendra Chandra Sen Barman ..	I
133	*Joymohan Nama Das ..	II
	Gazaria Primary.	
140	*Amiruddin ..	II
	Kayesthapally Jagattara Primary.	
141	*Nilima Probha Mazumder ..	I
142	*Manindra Mohan De ..	I
143	*Sukh Ranjan Roy ..	I
144	*Samarendra Kishore Dutta Roy ..	I
145	*Nirmalendra Ghose ..	I
	Banagram Primary.	
146	*Sudhan Kumar Paul ..	II
147	*Monoranjan Goswami ..	II
148	*Mrinal Ranjan Nandi Roy ..	I
	Kattaltali Primary.	
149	*Abdul Hakim ..	I
150	Abdul Hashim ..	II
	Jagannathpur Maktab.	
151	*Mafizuddin Ahmed ..	I
152	*Md. Asgarali ..	I
153	*Md. Minnatali ..	I
	Jamalpur Primary.	
156	*Jahiruddin Ahmed ..	I
157	*Matiar Rahman ..	I
	Bara Azaldi Board Primary.	
161	*M. Khurshid ..	I
162	*Abdul Hakim Khan ..	I
163	*Dhirendra Chandra Sircar ..	I
164	Abdul Jabbar Bhuiya ..	II
166	*Subodh Chandra Sircar ..	I
	Sagaya Primary.	
173	Nanda Kishore Malla Barman ..	II
	Bashgari Maktab II.	
174	*Kafiluddin Ahmed ..	I
	Magura Maktab.	
175	Md. Abdur Rahman ..	II
	Kalipur Board Primary.	
176	Nekbar Ali ..	II
	Saluadi Maktab.	
177	Md. Abdul Majid ..	I
	Charkawna Primary II.	
180	*Md. Abdur Rahim ..	I
181	*Md. Abdul Hamid ..	I
182	*Jatindra Chandra Barman ..	II
183	*Md. Abdul Ghani ..	II

Roll No.	Name.	Division.
	Charkawna Primary II.	
184	*Siddik Hussain ..	I
186	Ramesh Chandra Barman ..	II
187	*Md. Jonabali ..	II
	Charkahedhondul Maktab.	
188	Md. Muslehuddin ..	II
	Dhuldia Primary.	
189	*Jatindra Mohan Saha ..	I
190	*Ramesh Chandra Ghose ..	I
191	*Hari Charan Saha ..	I
192	*Aswini Kumar Saha ..	I
193	*Mohendra Chandra Sutradhar ..	I
194	*Prafulla Chandra Saha ..	I
	Kargaon Board Primary.	
197	*Abdul Kahar Mea ..	I
198	*Ganga Charan Kaibarta Das ..	II
	Char Lakhia Maktab.	
202	Md. Sohrabuddin ..	I
203	Md. Nazamuddin ..	II
	Paratala Maktab.	
204	Abdur Rezak ..	II
	Netrokona Dutta High School Centre.	
	Porakandulia Primary.	
1	Manada Sundari Shaha ..	I
3	*Sudhir Ch. Shaha Roy ..	II
	Berail Board Primary.	
4	Girindra Ch. Das ..	II
	Darsha Primary.	
6	*Md. Hasan Ali ..	I
7	*Md. Mozammel Hosain Khan ..	I
8	*Talebar Rahman Khan ..	II
	Mahadebpur Primary.	
9	Sheikh Abdul Hamid ..	II
12	Sheikh Raham Ali	II
	Budhi Primary.	
16	*Kanak Probha Biswas ..	I
17	*Nritendra Nath Dutta ..	I
19	*Naresh Ch. Bhadra ..	I
	Nagain Primary.	
20	*Md. Chand Mian ..	I
21	*Md. Hafizuddin ..	I
22	Md. Rezuddin ..	I
	Fachika Board Primary.	
29	*Surendra Ch. Bal ..	I
	Aurungabad Primary.	
31	*Upendra Ch. Deb Nath ..	II
	Khalapara Maktab.	
35	Md. Rahmat Ali ..	I
36	*Md. Amzad Hossain ..	I
37	Md. Nobi Hossain ..	I
40	Dhirendra Ch. Sutradhar ..	II
41	*Kumud Ranjan Das ..	I
	Dewpara Maktab.	
43	Md. Jabbar Ali Akanda ..	II
44	*Md. Makhbul Hosain Khan ..	I
45	*Md. Jashmatuddin ..	I

Roll No.	Name.	Division.
	Gardi Kanchanpur Maktab.	
47	Md. Idris Ali ..	II
	Barkhapan Board Primary.	
57	Pravat Ch. Talukdar ..	I
58	Md. Manohar Ali ..	I
	Barautar U. P.	
60	Girindra Ch. Paul ..	II
	Kandapera B. P.	
63	Brojasundar Sil Sarma ..	I
64	Priyanath De ..	II
	Monsurpur Primary.	
65	*Monomohan Sarkar ..	I
66	*Tarak Ch. Taluqdar ..	I
67	Kumud Ch. Sil Sarma ..	I
	Ikaratia Primary.	
68	*Joy Kumar Das ..	I
69	*Sudhir Ranjan Sarkar ..	I
70	*Md. Akhtar Hussain Taluqdar ..	II
	Saldegha Primary.	
71	Biseswar Sarkar ..	I
72	Kishorilal Roy ..	I
73	Satish Ch. Roy ..	I
74	Digendra Ch. Roy ..	I
	Kyteli Primary.	
76	*Jatindra Ch. Bhattacharyya ..	I
77	*Sailendranath Bhattacharjya ..	II
	Bandanal Board Primary.	
79	Safaruddin Bhuya ..	I
80	*Maphizuddin ..	I
81	Samiruddin ..	I
	Rampur Primary.	
85	*Harendranath Biswas ..	I
86	*Gopinath De Sarkar ..	I
87	*Ramani Kanta De Sarkar ..	II
88	*Md. Iskandar ..	II
89	Nalini Kanta Das ..	II
90	*Hosenali Khan ..	II
	Kowra B. P.	
91	*Md. Abdul Hakim ..	II
92	*Md. Ferojer Rahman Bhuya ..	I
	Perojpur B. P.	
99	Md. Abdul Zahed ..	II
	Rupchandrapur Maktab.	
100	*Md. Nawab Ali ..	I
	Jamalpur Centre.	
	Sharifpur Board Primary.	
1	*Nazibuddin Sarkar ..	I
2	Salimuddin Ahmed ..	I
3	Lall Muhammad Sardor ..	I
	Bibirchar Primary.	
5	Jahiruddin ..	II
6	Md. Asimuddin ..	II
	Bahanga Maktab.	
7	*Md. Faizar Rahman ..	I

Roll No.	Name.	Division.
	Goda Simla Maktab.	
9	Md. Hydar Ali ..	II
	Tulshirchar Board Primary.	
11	Md. Tofazzal Hossain ..	I
12	Md. Zainul Abedin ..	II
13	Md. Maiseruddin ..	I
	Janakipur B. P.	
14	*Md. Allauddin ..	
	Gourduar Maktab.	
17	Md. Abdul Aziz Shekh ..	II
	Damdama Maktab.	
19	Afsoruddin Ahmed ..	I
20	*Abdul Jalil ..	I
	Ganeshpur Maktab.	
22	Md. Ayezuddin ..	I
23	Md. Abdul Karim ..	II
	Banshi B. P.	
28	*Maniruddin Khan ..	I
29	*Md. Shaukat Ali ..	II
	Baniabazar Primary.	
30	Md. Khorshed Ali Khan ..	I
31	*Md. Jasimuddin ..	II
32	*Nripendra Ch. Bhowmik ..	I
	Taraganj Primary.	
33	*Benodebehari Chaudhuri ..	I
34	*Khagendra Ch. Debnath ..	I
36	Nityananda Tilakdas ..	II
37	Md. Hasen Ali ..	I
38	Md. Kabir Husain ..	II
	Banagram Maktab.	
39	Babar Ali Khan ..	I
40	Mahammad Ali Sheikh ..	II
	Shonakair Primary.	
42	Md. Naimuddin ..	I
43	*Mobarakali Ahmed ..	II
	Kamrabad Primary.	
46	Monomohan Das ..	II
47	*Bhupendra Ch. Nath ..	I
48	*Jatindra Ch. Nath ..	I
49	*Hem Chandra Nath ..	I
	Banshchora Primary.	
50	*Srish Chandra Deb ..	I
51	*Kumudbandhu Deb ..	I
	Nayanagar Maktab.	
53	*Md. Jaynal Abedin ..	I
54	*Md. Shadagarali ..	I
55	*Md. Israfil Husain ..	II
56	*Md. Nasimuddin ..	I
	Bora Primary.	
57	*Ataur Rahman ..	I
58	*Pranballav Ghosh ..	I
60	Kali Kumar Sil ..	II
	Tankey Maktab.	
61	Mustafizur Rahman ..	II
62	Mansurar Rahman Molla ..	I
	Tarani Ata Maktab.	
65	Md. Abdul Wahed ..	II

Roll No.	Name.	Division.
	Nayapara B. P.	
67	*Jugal Kishore De Sarkar ..	I
	Gabergram Primary.	
68	*Makhan Lal Das ..	I
	Mahmudpur Maktab.	
71	*Md. Abdur Razzaque ..	II
	Paila Baniabari Maktab.	
72	Md. Mofazzal Hossain ..	I
73	*Md. Jasimuddin ..	I
74	*Md. Abdur Rahman ..	I
	Konagaon Maktab.	
76	Md. Jonabali ..	II
	Krishnapur B. P.	
80	*Tarani Kanta Barman ..	II
	Nachanmahari B. P.	
83	Nilkanta Barman ..	II
	Merurchar B. P.	
85	Izzat Ali ..	I
	Goalgaon Maktab.	
89	Ear Hossain ..	II
	Langarpara Board Primary.	
92	Md. Abdul Jabbar ..	II
93	Jnan Ch. Barman ..	I
	Battajore Board Primary.	
94	Md. Motaharuddin ..	II
	Shyampur U. P. Maktab.	
98	*Girindra Ch. Ghosh ..	I
99	*Md. Jabanali ..	I
100	*Md. Ajijar Rahman ..	II
	Malirchar Board Primary.	
105	*Md. Sadekali ..	I
	Sanarchar Board Primary.	
108	*Ansarali Mandal ..	I
109	*Sekendar Ali ..	I
	Kholabarirchar U. P. Maktab.	
112	Md. Sekendarali ..	II
	Thanderbandha Maktab.	
115	*Abdul Gani ..	II
116	*Abdus Samad ..	II
117	Shanikuddin ..	II
118	*Amiruddin ..	I
	Sadhurpara Board Primary.	
122	*Md. Sekendarali ..	II
123	Md. Sayajjaman ..	II
	Surjyanagar Board Primary.	
124	Md. Abdul Hai ..	II
126	Mohommadali ..	II
127	*Md. Umarali ..	II
	Alirpara P. U.	
128	Md. Samsul Haque ..	II

Roll No.	Name.	Division.
	Bagharchar Maktab.	
131	Ahammedali Sheik ..	II
132	Badiajjaman Mea ..	II
	Bhat Khawa U. P.	
133	Md. Gayebali ..	II
134	Md. Tofazzal Haque ..	II
	Sasariabari U. P. Maktab.	
140	Md. Korbanali Khandakar	I

Faridpur District.

Faridpur Zilla School Centre.

	Gazaria Aliabad Primary.	
1	*Upendra Mohan Saha ..	I
	Khalilpur Board Primary.	
5	*Dhirendra Nath Mitra ..	I
	Parchar U. P.	
6	*Aswini Kumar Biswas ..	I
7	*Benod Behari Sarker ..	I
8	*Abinash Chandra Roy ..	I
	Lashkar Kandi Board Primary.	
9	Abdul Hamid Molla ..	II
	Greda Primary.	
12	*Sayed Abul Hossain ..	I
13	Shah Mahit Hussain ..	II
	Sadipur Board Primary.	
14	*Badaruddin Ahmed ..	II
	Gara Khola Board Primary.	
21	*A. Y. K. Nazmat Saiyed ..	II
	Ghop Ghat Board Primary.	
28	Kazi Ruhal Ameen ..	II
	Sasrail Primary.	
33	Abdul Bari Molla ..	II
	Teljuri Board Primary.	
34	*Haripada Bose ..	I
35	Imanuddin ..	II
	Iahan Gopalpur Board Primary.	
38	*Bimal Krishna Bose ..	I
	Charsultanpur Primary.	
40	Hari Charan Biswas ..	I
41	Akshay Kumar Sirker ..	I
	Sadarpur Board Primary.	
42	Jain Uddin Meah ..	I
43	Abdul Gafur Meah ..	I
	Char Ayodha D. N. U. P.	
45	Kshetra Mohan Biswas ..	I
	Charnata Khola-Buidya Dungi U. P.	
46	*Jogesh Chandra Biswas ..	I
47	*Kishore Mohan Roy ..	II
	Salma Primary.	
56	*Amulya Charan Shil ..	I
57	Manoranjan Shil ..	II
58	Niranjan Chakraverty ..	II
	Seltha Primary.	
59	*Tarakeswar Shaha ..	I
	West Chandra Primary.	
60	Abinash Chandra Sirker ..	II
	Majhardia Board Primary.	
61	Afsaruddin Ahmed ..	II
62	Shaikh Yusuf ..	II
63	Abdur Rasid Shikder ..	II
64	Momrez Mian ..	II
	Ainpur Board Primary.	
70	Abdur Rouf Mian ..	II
	Dangi Board Primary.	
71	Monoranjan Roy ..	I
72	Debiprosad Banerjee ..	II
	Pukharia Primary.	
73	Kali Kumar Chakravarty ..	II
74	Amrita Lal Das ..	II
	Jahardi Board Primary.	
76	*Abanibhusan Rahuth ..	II
	Pachpotra Primary.	
81	Rajendra Nath Pramanik ..	II
	Jangal Primary.	
82	Kanti Bhushan Sarker ..	II
	Joshai Primary.	
87	*Mahima Ranjan Roy ..	II
	Bhabanipur Board Primary.	
88	Rati Kanta Das ..	II
	Kasbamajhail Board Primary.	
95	Md. Naimuddin Khan ..	II
	Soolna U. P.	
1	*Abdul Malek Molla ..	I
2	*Abdul Huque Mea ..	I
	Char Bishnupur Board Maktab.	
6	Hossainuddin Khan ..	II
	Hat Narikelbari Board Maktab.	
8	*Arshed Ali ..	I
9	*Bahauddin Ahmed ..	I
10	*Bepari Arman Ali ..	I
	Sarbanandapur Maktab.	
13	Md. Rokonuddin ..	II
	Kachikata Sarkerkandi Maktab.	
16	*Lutfar Rahman ..	I
	Sikdar Kandi Board Maktab.	
20	Abu Taher Howladar ..	II

Roll No.	Name.	Division.
	Souldubi Board Maktab.	
21	*Aminuddin ..	I
	Hazigonj Maktab.	
22	*Abdur Razzaque ..	I
	Hasimdi Maktab.	
24	*Abdul Awal Mian ..	I
25	*Shaikh Abdul Haque ..	I
	Sutarkanda Board Primary.	
26	Mafizuddin Ahmed ..	I
	Kwalipara F. Maktab.	
27	*Quazi Md. Abu Yusaf ..	I
28	*Quazi Rahamuddin ..	I
	East Sadardi Board Primary.	
29	Shaikh Mafizuddin ..	I
30	Shaikh Habibar Rahman ..	II
	Rajbari Maktab.	
38	*Md. Abdus Sattor ..	I
39	*Md. Abdus Shukur ..	I
	Baonara Board Primary.	
41	*Md. Badi U-Zzaman ..	I
42	*Choudhury Ahmed Jan ..	I
	Paikandi Maktab.	
44	Md. Bazlur Rahman ..	I
	Majbari Maktab.	
46	*Md. Abdul Jabbar ..	I
	Madaripur Centre.	
	Bahadurpur U. P. School.	
2	Ramani Ranjan Ghosh ..	II
3	*Satya Narayan Ghosh ..	II
4	Rukmini Kanta Ghosh ..	II
6	Syed Alauddin Chaudhuri ..	II
	Pukuria U. P. School.	
13	Bhupendra Nath Biswas ..	II
	Char Gobindapur U. P. Board School.	
15	Abbas Ali Miah ..	I
	Soalpur Board U. P. School.	
16	Fazlal Karim ..	II
	Char Mustafapur Primary.	
18	*Sasadhar Mazumder ..	II
	Sarmangal U. P. Board School.	
19	*Jatindra Mohan Guha ..	II
	Shakherpar U. P. School.	
23	*Jodhisthir Chandra Sarkar ..	II
	Gobindapur U. P.	
26	*Jatindra Mohan Bhattacherjee ..	I
27	*Kamal Ranjan Chakraverty ..	II
29	*Shek Hossen Ali ..	II

Roll No.	Name.	Division.
	Sanmandi Board Primary.	
33	*Subodh Chandra Ganguli ..	I
34	*Ranjit Kumar Chatterjee ..	I
36	*Susil Kumar Roy Choudhury ..	I
	Laksmipur Board Primary.	
37	*Abdul Hakim ..	I
38	Aftabuddin ..	II
	East Sidya U. P.	
40	*Hara Lal Mandal ..	I
41	*Satish Chandra Ghosh ..	II
	Chhoygaon Madhusudhan U. P.	
44	*Chittaranjan Choudhury ..	I
	Char Shamail Board Primary.	
50	*Daliluddin Ahmed ..	I
52	Amjad Ali Khan ..	II
53	Dayamaya Biswas ..	II
54	Sukumar Roy ..	II
56	Jnanendra Nath Sarker ..	II
	Seruail Primary.	
59	*Shymapada Das ..	II
60	*Dinesh Chandra Mitra ..	II
61	*Gopal Chandra Chatterjee ..	II
62	*Santi Ranjan Bhattacherjee ..	II
	Janjirahat Board Primary.	
67	Hare Krishna Barai ..	II
68	Hafez Ahmed Kazi ..	II
	Krokchar Bhadrasir Board Primary.	
70	Jinnat Ali Miah ..	I
	Krokchar Bishoy Dhanir Kandi Board Primary.	
71	Sabdar Bepari ..	II
	Umedpur Primary.	
72	Keshab Lal Banerjee ..	I
73	Nagendra Sanker Shom ..	I
	Angaria Bazar F. Primary.	
74	*Manindra Chandra Paul ..	I
75	*Sachindra Kumar Sarker ..	I
76	*Jagadish Chandra Saha ..	I
77	Govinda Chandra Datta ..	II
78	Madan Mohan Poddar ..	II
79	Gauranga Chandra Das ..	II
80	*Haripada Saha ..	II
81	Kala Chand Chanda ..	II
82	*Madhusudhan Saha ..	II
83	Santi Charan Nandi ..	II
84	*Mihir Kumar Bhoumik ..	II
	Baraipara Board Primary.	
85	*Gopal Chandra Bhoumik ..	I
86	*Balahari Gope ..	I
87	Nityananda Rudrapaul ..	I
88	*Amjadali Howladar ..	I
89	Syam Lal Rudra Paul ..	I
90	*Nityananda Rudra Paul (No. I) ..	I
91	Hari Ananda Gope ..	I
93	Habibar Rahman Munshi ..	II
	Pakhira Rajarchar U. P. Maktab.	
1	*Abdul Mannan Miah ..	I
	Lakshmipur Board Maktab.	
4	*Md. Hatemali Shek ..	I
5	Md. Foaz Shek ..	I
6	Nacheruddin Guchi ..	I
7	Akkel Ali Farajee ..	II

Roll No.	Name.	Division.
	Char Gobindapur U. P. Maktab.	
8	*Abdul Khalek Miah ..	I
9	Abdur Rab Miah ..	I
	Rajoire Board Maktab.	
10	*Md. Habibar Rahman Karikar ..	I
	Khoazpur Bepari Board Maktab.	
15	Mobarak Ali Bepari ..	I
	Kalchini Nayakandi U. P. Maktab.	
18	*Ali Ahmed Talukder ..	I
19	*Abdur Rahman Talukder ..	I
20	Sahebali Talukder ..	I
	Bidyabagish Maktab.	
23	Nayan Khan ..	I
24	Abdul Jalil ..	II
	Dularchar Shikderbari Maktab.	
28	Hasanali Sikder ..	II
	Char Hogla Gazibari Maktab.	
29	*Md. Shafiuddin Mia ..	I
	Sheikpura Maktab.	
36	Kazi Abdul Hashem ..	I
37	Abdul Karim Khan ..	I
39	Eshaque Khalifa ..	II
40	Hafizuddin Mattabbar ..	II
	Rajorcher Mollakandi Maktab.	
41	Shamsuddin Miah ..	II
42	Md. Amir Ali Molla ..	II
	Kajiarchar Board Primary.	
44	*Hushem Ali ..	I
45	Abdus Samad ..	I
46	*Anwar Ali ..	I
	Sannyasirchar Board Primary.	
48	Abdul Kader Miah ..	I
	Mirzar Char Board Primary.	
50	*Abdul Khalek Miah ..	I
	Ktrail Board Primary.	
54	Mohsen Uddin Ahmed ..	II
	Kabilpur Board Primary.	
57	Abdul Wahed Khan ..	II
58	Khorshed Ali Gaura ..	I
59	*Ensanuddin Fakir ..	I
	Kanchanpara Primary Maktab.	
61	Md. Arsed Ali ..	II
	Kanchanpara Maktab.	
62	Md. Hazarat Ali ..	I
	Bazanpara Board Maktab.	
63	*Md. Abul Kashim Miah ..	I
64	*Md. Abdul Rub Miah ..	II
	Kalukati Primary Maktab.	
65	Shamsuddin Bepari ..	II
66	Wazed Ali Bepari ..	II
	Jogatta Primary Maktab.	
68	*Md. Seikh Abdul Hai ..	I

Roll No.	Name.	Division.
	West Benodepur Board Primary.	
69	*Shiek Abdur Rasid ..	I
74	Abdur Rahaman Sarkor ..	II
	Bhasanchar Dadpur Moslem F. Primary.	
75	Erfanuddin Howladar ..	II
76	Md. Easin Bepari ..	II
77	Abdul Mazid Khandaker ..	II
78	Abdul Kudduch Moral ..	I
	Westporasardi Moslem F. Primary.	
79	*Md. Mazaffer Hossain ..	I
80	*Shamsuddin Ahamed ..	I
	West Char Rasundi Primary Maktab.	
81	Md. Ayubali Howladar ..	II
82	Md. Hamizuddin Molla ..	II
	Mulfatganj Maktab Primary.	
83	*Md. A. Rahaman Miah ..	I
84	Md. Nural Abidin Sikdar ..	I
85	*Md. Golam Mostafa ..	I
86	*Md. A. Mazid Sikdar ..	I
87	Md. Mahfezar Rahaman Sikdar ..	I
	Nagar K. U. P. Maktab.	
88	Md. Meherali Miah ..	I
	Gopalganj Centre.	
	Patikholbari U. P.	
2	Surendra Nath Biswas ..	II
4	*Miss Manorama Biswas ..	I
5	*Miss Promoda Sundari Biswas ..	II
8	*Nadiabasi Adhikari ..	II
	Basuria U. P.	
9	*Mahammad Ratan Molla ..	I
	Boira U. P.	
10	Moakkel Molla ..	II
	Sonasur Board U. P.	
14	Mukundaram Biswas ..	I
15	Kiran Chandra Biswas ..	II
16	Chitta Ranjan Biswas ..	II
17	*Sulata Sundari Biswas ..	I
	East Gobra U. P.	
18	Suklal Bala ..	I
19	Nityananda Sikder ..	I
20	Rasik Lal Biswas ..	I
	Bhojergati U. P.	
21	*Chittar Ranjan Samaddar ..	I
	Thutamandra U. P.	
22	*Bhiswadeb Biswas ..	I
23	*Rajendra Nath Ghosh ..	II
	Padmabila U. P.	
25	*Samarendra Thakur ..	II
26	*Atul Chandra Majumder ..	II
	Bodgram Board U. P.	
28	*Basudeb Biswas ..	I
29	*Ramesh Chandra Bhadra ..	I
	Karpara Hat U. P.	
31	*Md. Sainuddin Molla ..	I
32	*Md. Abur Rab Molla ..	I
33	Abdur Rahaman Molla ..	II

Roll No.	Name.	Division.
	Patharghata Board.	
41	Atul Chandra Sarker ..	I
	Sarabari Labutala U. P.	
45	*Nakuleswar Mazumder ..	II
46	Judhisthir Biswas ..	I
	Bagan Uttarpara F. Primary.	
54	Narendra Nath Barai ..	II
	West Suagram Primary.	
56	Harendra Nath De ..	II
	Dharendra Board School.	
58	*Jogendra Nath Das ..	I
	Bahugram Primary.	
60	*Panchanan Biswas ..	I
	Chaocha Primary.	
61	*Anil Ranjan Basu ..	II
	Majhigati Primary.	
62	*Basudeb Biswas ..	I
	Gourhadi Primary.	
66	*Adya Prosad Majumder ..	I
	Dighargati Primary.	
67	*Satish Chandra Mandal ..	I
68	Narayan Chandra Biswas ..	II
69	*Dhirendra Nath Samajder ..	II
71	*Jatindra Nath Sarker ..	II
	Bidyadhar Primary.	
72	*Charu Gopal Biswas ..	I
	Mahmudpur Primary.	
82	*Nagendra Nath Bala ..	I
	Shaflidanga Board School.	
88	*Sudhendu Kumar Haldar ..	II
90	Pratul Kumar Choudhury ..	II
	Sitarampur Board School.	
96	Suresh Chandra Sarker ..	I
	Padmabhila Primary.	
98	*Rasik Lal Malakar ..	II
99	*Mohendra Nath Biswas ..	II
	Khagrabaria Primary.	
111	*Abdus Sattar Mallik ..	II
	Chaocha Board Primary.	
115	*Abdul Mannan Mia ..	I
	Naohata Board School.	
117	*Tamijuddin Mia ..	I
119	Eskandar Ali Mia	II
	Singa-Andharkota Board Primary.	
122	Satish Chandra Bar ..	II
124	*Narayan Chandra Sarkar ..	II
125	Kshitish Chandra Dutta ..	II
	East Deasur U. P. School.	
129	*Nirode Behari Biswas ..	I
131	*Kiron Chandra Dutta ..	II
	Falshi Board School.	
132	*Nagendra Nath Sarker ..	I
	Maldia Maktab.	
133	Bholanath Biswas ..	II
1	*Abdul Hakim Mia ..	II
	Gopalganj Islamia F. Maktab.	
10	*S. M. Lokman Hakim ..	I
	Bansbaria Final Maktab.	
11	*Taiyab Rahman ..	I
	Bandhanbari Maktab.	
13	*Mosammat Jamila Khatoon ..	I
	Barochar Naogaon Centre.	
	Barochar Naogaon U. P. Maktab.	
1	*Salema Khatoon ..	I
	Bakarganj District.	
	Barisal Centre.	
	Makram Protap Board Primary.	
1	*Abdur Razzak Gazi	I
2	*Gopi Raman Kundu ..	II
3	*Hemanta Kumar Gope ..	I
4	*Joynal Abedin ..	II
5	Jitendra Lal Kundu ..	II
6	*Lakshmi Kanta Dhupi ..	I
7	*Abdul Mannan Sikdar ..	II
8	*Ramchandra Mistri ..	II
9	Biswa Nath Napti ..	I
10	Nagendra Kumar Seal ..	II
11	Md. Eusuf Akon ..	I
	Potang F. Primary.	
12	*Abdus Solam Mia ..	I
	S. Charhogolpatia F. Primary.	
16	Mohananda Kaviraj ..	II
	Charaicha B. R. S. Primary.	
17	*Lakshmi Kanta Sikdar ..	I
	Eash Roypura F. Primary.	
23	Chandra Kanta Das ..	II
24	Jojneswar Bepari ..	II
26	Ali Azim Khan ..	II
27	Kanak Lata Devi ..	I
28	Sorabindu Devi ..	II
	Baraikhali F. Primary.	
29	Nakul Chandra Bur ..	II
30	Kala Chand Majumdar ..	II
	Panbaria Board Primary.	
33	*Manoranjan Kirtania ..	II
35	*Dwijneswar Guha ..	II
	East Hijaltola Primary.	
36	*Gauranga Chanda ..	II
37	*Bejoy Bhusan Das ..	II
	N. Brahmandia Primary.	
44	Radha Ranjan Saha ..	II

Roll No.	Name.	Division.
	W. Charkapalvera F. Primary.	
45	Nirmal Chandra Howladar ..	II
	Hogla Board Primary.	
47	Rasik Chandra Nath ..	II
	Kasipur Ratanmani Board Primary.	
50	*Chitta Ranjan Basu ..	I
	Sanker Math F. Primary.	
51	*Amal Krishna Mukherjee ..	I
54	*Narendra Nath Gope ..	II
	W. Chandra Mohan F. Primary.	
56	Abdul Gafur Farazi ..	II
57	Abdus Satter Hawladar ..	I
58	*Arshed Ali Khan ..	II
	Bhutandia F. Maktab.	
59	Amzed Ali Sikdar ..	I
	East Rahamatpur F. Maktab.	
63	Kazi Nural Hoque ..	I
64	Ameer Hossain Khan	I
	S. Bailakhali F. Maktab.	
65	*Fazle Ali Howladar ..	I
66	*Abdur Rahman Akan ..	I
68	*Md. Meser Ahmed ..	I
69	*Fazlar Rahaman ..	I
70	*Golam Mustafa ..	I
71	*Arazali Bepari ..	II
	Char Hogla Board Maktab.	
73	*Ensan Ali ..	I
74	Wazed Ali ..	I
75	Abdul Gani Molla ..	I
76	Razzab Ali ..	I
77	Akabbar Ali ..	I
	Barisal Islamia Maktab.	
78	*Abdul Khaleque Mia ..	I
	Bailakhali F. Maktab.	
79	Abdul Matleb ..	II
80	Abdul Malek ..	II
81	Safiuddin Mridha ..	II
	Charkapalvera Board Primary.	
83	*Abdul Mannan Sikdar ..	I
	Thakurmallik F. Primary.	
85	*Abdul Aziz ..	I
86	Abdul Mannan ..	I
	Mangal Hata F. Maktab.	
88	*Abdul Hakim Karikar ..	I
	Kagasura F. Maktab.	
90	Eshaque Ali ..	II
	Panbaria F. Maktab.	
94	Azizar Rahman ..	II
95	Abdul Mannan ..	II
	Charbaria Lamchori F. Maktab.	
97	*Easin Sikdar ..	I
	N. Baherchar Ghosekati F. Maktab.	
102	Makbul Ahmed Topadar ..	I

Roll No.	Name.	Division.
	Dinor F. Maktab.	
104	*Md. Amjed Ali ..	I
105	*Rameswar Howladar ..	I
106	*Md. Taheruddin Howladar ..	I
107	*Md. Ismail Howladar ..	I
108	*Md. Abdus Sobhan Howladar ..	I
	Charbaria Board Maktab.	
109	*Syed Mohammad Ali ..	I
110	Abdul Majid Howladar ..	II
113	*Mohammad Ali ..	I
	C. Baharchar Kshudrakati F. Maktab.	
114	Fazle Ali ..	II
	Charkawa F. Maktab.	
116	*Md. Akram Gazi ..	II
120	*Md. Moslem Ahmed ..	II
	Kshudrakati F. Maktab.	
121	Wajed Ali ..	I
	Norakati F. Maktab.	
125	Taib Ali ..	I
	Karnakati Board Primary.	
127	*Abdur Rasid Khan ..	I
128	Esahaque Ali Molla ..	I
	Bagura Nathullabud Maktab.	
129	Amin Uddin ..	II
	Chandramohan F. Maktab.	
130	Md. Taiab Ali Howladar ..	II
	Sultani F. Maktab.	
134	*Narendra Chandra Deb Nath ..	I
	Charmomania F. Primary.	
135	*Kalikanta Sikdar ..	I
	Char Santoshpur F. Primary.	
138	Brajendra Lal Mandal ..	II
	Khantakhali Board Primary.	
140	Shamsul Haque ..	II
141	Ayen Ali ..	II
	Kashipur F. Primary.	
143	*Sitanath Sikdar ..	II
	C. Goalbhaur F. Primary.	
144	*Paresh Chandra Nandi ..	II
	S. Goalbhaur F. Primary.	
146	*Bejoy Lal Mukherjee ..	I
147	*Manik Lal Muhari ..	II
148	*Usharani Majumdar ..	I
149	*Sunirmal Hashini Dutta ..	I
	C. Charmethua F. Maktab.	
151	*Abdul Mannaf ..	I
	Baherchar Lakshmipur F. Maktab.	
153	*Basarat Ali Khan ..	II

Roll No.	Name.	Division.
	Sreepur F. Maktab.	
154	*Md. Shamsul Haque	I
155	Md. Safiuddin	II
156	Md. Ali Akbar	II
157	Md. Shamsher Ali	II
159	Md. Abdul Maleque	II
	Sultani F. Maktab.	
163	*Kaisar Ahmad	I
164	Abdul Maleque Taluqdar	II
	N. Char Paschim F. Maktab.	
165	Syed Ali	I
	Bahadurpur Parakhat F. Maktab.	
169	Md. Abdul Khaleque	II
	Madartalihat F. Maktab.	
172	*Ramizuddin Khan	I
173	Abul Hashem	II
174	*Afazuddin Dewan	II
	Badarpur Maktab.	
175	*Faizuddin Ahmed	I
	Mridharhat Maktab.	
178	Adam Ali	II
	E. Nazirpur Maktab.	
181	Abdul Ghani	I
182	*Abdul Gafur	I
183	*Abul Kashem Howladar	I
184	Md. Daliluddin Howladar	II
185	Abul Bashar Md. Hussain Ali Khan	I
186	*Md. Amjad Ali Mir	I
187	*Abdul Malek Khan	I
	S. Kazirchar Maktab.	
188	Sofed Ali Paik	I
189	*Abdul Latif Howlader	II
	S. W. Kazirchar Maktab.	
190	Motiur Rahman Sikder	II
	C. Kazirchar Maktab.	
192	*Nader Ali Howladar	I
193	*Abdul Karim Howladar	
	Posna F. Maktab.	
196	Idris Ali	II
197	Abdul Jabbar	I
198	Abdul Qader	I
	Badapur F. Maktab.	
200	Lal Mohan Sil	II
	Taykalimchar Board Primary.	
201	Abdul Jabbar	I
	Kumarkhali F. Primary.	
202	*Parulbala Dutta	I
	Ganpara Kasipur F. Maktab.	
203	*Bhudeb Lal Chatterjee	II
204	*Makhan Lal Das	II

Roll No.	Name.	Division.
	Jhalakati Centre.	
	W. Fuluhar Primary.	
1	*Mobarak Ali Faraji	I
2	*Abdul Hakim Howlader	II
5	*Mir Abdus Sobhan	II
7	Muhammad Hanif	II
	Sheota Primary.	
9	*Mohendra Nath Halder	II
	Chorakhali Primary.	
11	*Ahmad Ali Howlader	I
12	*Safiuddin Ahmed	I
	W. Baruhar Primary.	
13	*Sailendra Nath Majhi	II
14	*Debendra Nath Majhi	II
	Sangor Primary.	
15	*Surendra Nath Sil	I
	Simuleswar Primary.	
16	*Prafulla Kumar Saha	II
17	*Motahar Howlader	II
22	*Rajendra Lal Saha	II
	Hossainpur Board Primary.	
23	*Ram Chandra Samaddar	I
24	*Samarendra Nath Basu	II
	Keora Primary.	
27	*Janardan Banerji	I
28	*Sudhir Kumar Guha	I
29	*Krishna Kanta Rajak Das	I
30	*Lakshmi Kanta Das Sarma	II
31	*Jatindra Nath Bhattacharji	II
32	*Manindra Nath Sen Sarma	II
	E. Fuluhar Primary.	
33	*Radharaman Gope	I
34	*Dhirendra Nath Das	I
	Monoharpur Primary.	
35	*Sasthipada Sarkar	II
36	*Abdul Aziz	II
	Dewri Board Primary.	
37	*Khorshed Ali	I
	Kaibartakhali Primary.	
38	*Indra Mohon Mistry	I
39	*Jitendra Nath Hazra	II
	Uttampur Board Primary.	
41	*Harendra Nath Mistry	I
43	*Mohendra Nath Mandal	II
	Sambalkati Board Primary.	
44	*Suniti Lata Ray	I
45	*Dhirendra Nath Das	I
46	*Abdul Jabbar Howlader	I
47	*Abdur Rashid Khalifa	I
48	*Sukumar Datta	I
	Tarabunia Board Primary.	
49	*Santosh Kumar Sarkar	I
50	Chapalabala Ghosh Roy	I
51	*Nur Fazle Ali Molla	I
	Naikati Primary.	
53	*Afsar Ali Howlader	II

Roll No.	Name.	Division.
	Bhimruli Board Primary.	
57	*Jogendra Nath Mistry	I
58	*Monoranjan Halder	I
59	*Jatindra Nath Halder	II
61	*Hari Belash Ray	II
	Satadaskati Primary.	
63	*Akshoy Kumar Mistry	II
64	*Jatindra Nath Halder	II
65	*Sarat Chandra Kharati	II
	Binnapara Primary.	
66	Hiralal Howlader	II
67	Sudhir Kumar Biswas	II
68	Benoy Bhusan Sarkar	II
	Navagram Primary.	
69	*Nur Hossainali Fakir	I
	Indrapasa Maktab.	
71	*Saijuddin Howlader	I
72	*Kazemali Howlader	I
73	*Hossain Ali Howlader	II
	Guthia Maktab.	
76	*Md. Hashem Ali	I
77	*Md. Sekeluddin	I
78	*Md. Abdul Gani Sikder	I
79	*Md. Adam Ali	I
	Murasata Maktab.	
80	*Muhammad Ali Sarif	I
	Chunpuri Maktab.	
83	*Ashraff Ali Khan	I
84	*Esahaque Sarif	I
	Barakaibarta Khali Maktab.	
85	*Abdul Majid	I
86	*Abdul Kader	I
87	*Abdur Rahim	I
	Khagutia Maktab.	
88	*Rafizuddin Talukder	I
89	*Jalaluddin Sarder	I
91	Arjuk Ali Mridha	II
	Jibandas Kati Maktab.	
93	Md. Abdul Mannaff	II
94	*Abdul Hakim	I
95	*Abdul Hamid Gazi	II
97	*Munsur Ali	II
98	*Safiluddin	I
	Sakrail Maktab.	
100	*Nojib Ali Khan	I
	Bankati Maktab.	
102	*Kadam Ali Sikder	I
103	*Kasem Ali Howlder	I
	Manpasa Maktab.	
105	*Mokhles Ali	I
107	*Md. Yusuf	I
108	*Abdul Jabbar	I
	Shaturia-Hamidia Maktab.	
116	*Abdur Rahman Akon	I
117	*Harunal Rashid	I

Roll No.	Name.	Division.
	Ismail Maktab.	
121	*Joynal Abedin	II
123	*Abdur Rahman Khalifa	II
124	*Abdus Sattor Sardar	II
	Khaladkul Maktab.	
127	*Md. Abdul Gafur Molla	II
129	*Ali Ahmed	II
130	*Md. Abdul Majid Molla	II
131	*Md. Hatem Ali Fakir	II
	Pormahal Maktab.	
132	*Abdul Karim Khan	I
133	*Tamijuddin Howlader	I
	W. Palot Maktab.	
134	*Kazem Ali Howlader	I
	E. Palot Maktab.	
137	Moinuddin Molla	II
	Patiakhali Maktab.	
138	*Aftaruddin	II
139	*Md. Abdul Majid	II
	Beshankhan Maktab.	
141	*Abdul Hamid Molla	I
	Saturia Naikati Maktab.	
145	*Nirode Chandra Halder	II
	Naichity High School Centre.	
	Kumarkhali Final Primary.	
1	*Dasarath Kunda	I
2	Matilal Kunda	I
3	Kali Charan Kunda	I
4	Harendra Nath Sil	I
5	*Sukharanjan Majhi	I
6	*Anil Kumar Dutta	I
7	Nalinibala Majhi	II
	West Boalia Final Primary.	
8	Shyamacharan Brahman	I
	South Sidhakati Final Primary.	
9	Jagadish Chandra Chakraverty	I
10	*Renukana Baghal	I
11	Shova Rani Debi	II
12	*Nihar Kana Debi	I
13	Kalipada Mukherji	II
	Teola Final Primary.	
14	Kartik Chandra Sinha	II
	Bhabanipur F. Primary.	
19	Narayan Chandra Deb Nath	I
20	Radhaballav Nath	II
21	Surendra Kumar Kirtania	II
	Sormohal F. Primary.	
22	Hara Kumar Deori	II
23	Fulurani Sen Gupta	I
24	Ashalata Sil	II
25	Charubala Sen Gupta	I
26	Tularani Sen Gupta	II
27	Manada Sundari Sil	I
	Birnarayan F. Primary.	
28	*Ajit Kumar Chatterji	I

Roll No.	Name.	Division.
	Pulkati F. Primary.	
30	Upendra Nath Chakraverty ..	II
	Hordal F. Primary.	
33	Sachindra Lal Guha ..	II
34	Hari Narayan Guha ..	II
35	Ananta Kumar Das ..	II
	Gouripasha F. Primary.	
36	Kali Sankar Mukherji ..	II
	Charsarai F. Primary.	
38	Rasik Chandra Mandal ..	II
	Central Sorai F. Primary.	
39	Narayan Chandra Mandal ..	II
42	Anil Chandra Mandal ..	II
	Nalichity Free Primary.	
47	*Profulla Ranjan Das ..	II
49	*Nagendra Nath Chakraverty ..	II
	Bharatkati Board Primary.	
52	*Muhammad Azhar ..	II
	Latifasar F. Maktab.	
56	*Abdul Habib Laskar ..	I
57	*Nafizur Rahman Howlader ..	I
59	Syed Abdur Rahman ..	II
60	Aftabuddin Howlader ..	II
61	Majid Ali Howlader ..	II
	Chachair F. Maktab.	
63	*Mohammad Abdul Hai ..	I
64	*Mir Abdul Aziz ..	I
65	*Mir Amjad Ali ..	II
66	*Abdul Aziz Karikar ..	II
	Naiary F. Maktab.	
67	Abdul Kader Biswas ..	II
	Tinerkati F. Maktab.	
70	Mukter Ali Akon ..	II
	Char Boalia Board Maktab.	
72	Kazi Abdul Manan ..	I
73	Enayet Husain Khan ..	II
	Mukhia F. Maktab.	
75	Mohammad Fazlul Moque ..	I
77	Mohammad Maminuddin Mia ..	II
	N. Katipara F. Maktab.	
80	Mohammad Jaidor Ali Howlader ..	I
81	Amjad Ali Khan ..	I
	Nalbunia F. Maktab.	
82	Wazed Ali Sikder ..	I
84	Mamtazudin Howlader ..	I
	North Malwar F. Maktab.	
87	*Abdul Hakim ..	I
88	Abdul Majid ..	I
	Powla F. Maktab (I).	
91	*Atahar Ali Khan ..	I
92	*Majiruddin Howlader ..	I
93	Abdul Aziz Faraji ..	I

Roll No.	Name.	Division.
	Powla F. Maktab (II).	
94	Helaluddin Howladar ..	II
95	Erfanuddin Howlader ..	II
	Kaladah F. Maktab.	
108	*Mohammad Ishaque ..	I
	Nalbunia F. Maktab.	
109	*Fazlul Karim ..	I
	Kamdebpur Maktab.	
112	Satish Chandra Sil ..	II
	Baishakhia B. Maktab.	
113	Nazibar Rahman Molla ..	II
	Hadua F. Maktab.	
115	Abdul Latif Sikdar ..	I
	Tarki H. E. School Centre.	
	Palardi F. Primary.	
1	Janardan Chakraverty ..	II
	Adhuna F. Primary.	
5	Nagendra Nath Das ..	II
	Joysirkati F. Primary.	
6	*Indu Bhusan Das Majumder ..	I
	Bahadurpur F. Primary.	
8	Kalikrishna Bain ..	II
	Harisena F. Primary.	
10	Krisnalal Datta ..	I
	Sundardi F. Primary.	
11	Gangadhar Ganguli ..	I
12	Amar Chandra Paul ..	II
	Saheberhat F. Primary.	
14	*Ganesh Chandra Barai ..	I
15	*Mahananda Barai ..	II
16	*Sarat Chandra Howlader ..	II
17	*Jatindra Nath Ray ..	II
	Kuralia F. Primary.	
19	*Mani Chand Halder ..	I
20	*Purna Chandra Barai ..	I
21	Madhu Sudhan Mandal ..	II
	Ramaidhi F. Primary.	
22	*Chittaranjan Paul ..	I
23	*Hari Narayan Nandi ..	II
24	Kazi Md. Idris Ali ..	II
	Maisterkandi F. Primary.	
25	*Monohar Mandal ..	I
26	Jadulal Mandal ..	II
28	Debendra Nath Mandal ..	II
	Barapaika F. Primary.	
30	Umesh Chandra Banerji ..	I
31	Jaladhar Banerji ..	II
33	Manoranjan Halder ..	II

Roll No.	Name.	Division.
	Naghirpur F. Primary.	
34	*Sudhamya Kumar Adhikari	I
35	*Bidhu Bhusan Bairagi	II
36	*Dwip Chand Barai	I
	Askar Board Primary.	
41	*Matilal Chakraverty	I
43	Ramdas Halder	I
44	Ruhidas Madhu	II
45	Harimohan Sil	I
46	Panchanan Baisnab	II
47	Rajbihari Mistry	II
48	Manoranjan Hiro	II
	Ramerkati Primary.	
50	*Amritalal Biswas	II
	Ashokeen Board Primary.	
54	*Nagendra Nath Bepari	II
	Bejoypur C. M. Primary.	
56	*Aswini Kumar Halder	I
57	*Ananda Chandra Baidya	II
58	*Chittaranjan Barai	I
59	*Arabindu Bepari	I
60	*Danial Bala	I
61	*Samual Rai	I
	Askar Board Primary.	
62	*Kamala Kanta Chakraverty	I
	Chandshi Primary.	
63	*Fani Bhusan Bhattacharji	II
	Hashnabad Maktab.	
67	*Nur Mohammad Sikder	I
68	Abdul Barek Sarder	II
69	Abdur Rasid Khan	I
	Mollapara Maktab.	
71	Abdul Khaleque Molla	II
	Serab F. Maktab.	
74	*Matiur Rahman Khan	I
	N. Chando F. Primary.	
79	*Md. Safiuddin	I
81	*Md. Majid Ali Samamat	II
	Kalna Board Primary.	
84	*Abdul Khaleque Akon	II
85	Shamsul Haque Khandaker	II
86	*Abdul Barik Khan	II
87	Md. Isahaque	II
	Hashnabad Board Primary.	
91	Keramat Ali Howlder	I
	Kandapasa F. Maktab.	
94	Nuruddin Bali	II
	Babarkhana Maktab.	
95	*Sufia Khatun	I
	Bhola Centre.	
	Ilshahat Final Maktab.	
1	*Hari Mohan Talukder	I
	Hazari Board Primary.	
2	Khorshed Ahmed Patwary	I

Roll No.	Name.	Division.
	Char Noabad F. Primary	
8	*Sultan Ahmed	I
10	*Surendra Chandra Ray	II
12	*Prafulla K. Dewan	I
	Medua Practising Primary.	
19	Ali Akbar	I
20	Md. Esahaque	II
23	Abdur Rashid	II
	Syedpur Board Primary.	
26	*Badiazzaman	I
27	*Khorshed Ahmed	II
	Char Noabad F. Primary.	
39	*Mojibal Haque	I
	Ratanpur Moslem F. Primary.	
41	Jainal Abedin	I
	Sibpur Moslem F. Primary.	
46	*Delwar Hussain	I
49	Wajih Ullah	I
	Char Suri Moslem B. P.	
51	Asmat Ali	I
52	Shajan Ali	II
53	Abdul Kader	II
54	Sherajal Haque	II
	Bejaypur U. B. F. Maktab.	
57	*Khorshed Ahmed	I
58	*Mahbub Alam	II
59	*Waliar Rahman	I
	C. Bejaypur F. Maktab.	
60	Jalal Ahmed	II
62	Abdul Haque	I
	N. Ilsha Moslem Board Primary.	
73	Hazrat Ali	II
75	Nazir Ahmed	I
	W. Madhupur F. Maktab.	
76	Md. Jebal Haque	II
	Ilshahat F. Maktab.	
80	Abdul Mannan	II
81	*Md. Mojibal Haque	I
	S. E. Jaynagar F. Maktab.	
87	Jalal Ahmed (II)	I
	S. W. Jaynagar Maktab.	
94	Abdul Aziz	II
	E. Mahanpur F. Maktab.	
95	Abdus Shahid	I
	Chatalia F. Maktab.	
103	Siddique Ahmed	I
	Charpadma F. Maktab.	
106	Abdul Mannan	I
107	Fazlar Rahman	I
108	Md. Wazih Ullah	I
109	Shadat Hussain	II
110	Anisal Haque	II
	Charmunshi Moslem B. P.	
111	Mofizal Haque	I

Roll No.	Name.	Division.
	S. Bhowanipore F. Maktab.	
117	Khorshed Alam ..	II
	Balia Deghaldi Moslem Board Primary.	
119	Hafez Ahmed ..	II
	N. Deghaldi U. B. F. Maktab.	
121	Sekandar Ali ..	I
122	Ali Akbar ..	I
	Ramnagar F. Maktab.	
123	Fazlar Rahman ..	II
124	Muzaffar Ahmed ..	I
	Sreeram Majhi F. Maktab.	
126	Abdul Jalil ..	I
127	Abdul Wahab ..	I
	Char Munshi Moslem Board Primary.	
132	Anisul Hoque ..	II
	Shibpur Moslem F. Primary.	
133	*Rashid Ahmed ..	I
	Baranaddhi H. E. School Centre.	
	Kutuba F. Primary.	
1	Girindra Chandra De ..	I
	Barhanganj F. Primary.	
2	Umesh Chandra De ..	I
3	Abani Bhusan De ..	II
	Kalatali Primary.	
5	*Upendra Kumar Das ..	II
	Burirchar Primary.	
6	Surendra Kumar Das ..	II
	Tabgi Mathkhola Primary.	
7	Azahar Mia ..	II
	N. Joypur F. Primary.	
9	Profulla Kumar De ..	II
	Raichandhat F. Primary.	
10	*Bishambar Das ..	I
11	Harendra Kumar Das ..	II
	Tabgi F. Primary.	
15	Pran Bindu De ..	II
	Char Fesson F. Primary.	
18	Md. Mabarak Ali ..	I
	Lalmohan F. Maktab (I).	
20	*Abdur Rob ..	I
21	*Md. Hashem ..	II
23	Delwar Hossain ..	I
24	Aminal Haque ..	II
	Lalmohan F. Maktab (II).	
28	Md. Hanif ..	I
	S. Asali Lalmohan F. Maktab.	
29	Mahammad Mia ..	I
30	Mahammad Wazir ..	II

Roll No.	Name.	Division.
	Asali Lalmohan F. Maktab.	
31	Abdur Rahman ..	I
	Westanganj F. Maktab.	
33	Md. Aminal Haque ..	I
	Charkalma Board Maktab.	
34	Munsur Ahmed ..	I
	Joya F. Maktab.	
35	Munsur Ahmed ..	I
	Barhanganj F. Maktab.	
37	Abdul Majid ..	II
	Lord Hardinge Maktab.	
38	Abdur Rouf ..	I
39	Md. Ismail ..	I
40	Abdul Kuddus ..	I
	Fulkachia F. Maktab.	
41	Md. Sekandar ..	II
42	*Khorshed Ahmed ..	I
43	Delwar Hossain ..	II
44	Md. Soleman ..	II
45	Altafur Rahman ..	II
	Joypur Board Maktab.	
46	Syed Ahmed ..	II
47	Mafizullah ..	II
49	Bazlur Rahman ..	II
50	Abdul Ghani ..	II
	Nischintapur F. Maktab.	
51	Md. Mozammal Haque ..	II
52	Md. Abdul Anal ..	II
53	Abdus Satter ..	II
	N. Joypur F. Maktab.	
54	*Belayet Hossain ..	I
55	*Badar Alam ..	I
56	Jahural Islam ..	II
	S. Shambhupura F. Maktab.	
59	Md. Tofazzal Hossain ..	I
	Fakirerhat F. Maktab.	
60	Abdul Motaleb ..	I
61	Noor Mohammad ..	II
	Chandipur F. Maktab.	
62	*Mir Mahammad Bashirulla ..	I
63	Abdul Motaleb Mia ..	II
	Khoshnadi Board Maktab.	
64	*Abual Kasem ..	II
	Manika F. Maktab.	
68	Md. Nazmal Haque ..	I
71	Mir Joynal Abedin ..	II
	E. Batamara F. Maktab.	
73	Latifur Rahman ..	I
	Sibpur Board Maktab.	
75	*Syed Ahmed ..	I
76	*Abdul Jalil ..	I

Roll No.	Name.	Division.
	Dharia F. Maktab.	
78	*Serazal Haque Khan ..	I
	Satani Lalmohan F. Maktab.	
80	Abdur Razzak ..	I
81	Azhar Uddin ..	I
	Syedowli F. Maktab.	
1	Mohammad Samsul Haque ..	I
4	Panjat Ali ..	II
	Bakarganj H. E. School Centre.	
	Kapila U. P.	
1	Jugal Krishna Dhupi ..	II
	Kalaskati Kalibari U. P. Primary.	
2	Hari Narayan Karmaker ..	I
3	Subodh Kumar Nandi ..	I
4	Biswesswar Sankha Banik ..	II
5	Balaram Nandi Bas ..	I
6	Akhoy Kumar Kaibarta ..	I
	S. Helencha F. Primary.	
7	*Santi Ranjan Das ..	I
8	*Sudhangsu Kumar Mitra ..	II
9	*Fasle Haque Khan ..	I
	Bhandarikati U. P.	
10	Abdus Sobhan Kha ..	II
12	Saraswati Bala Dey ..	I
	N. Nasangal U. P.	
13	*Saileswar Mukehrji ..	II
	Nalua Baraibari U. P.	
18	Ramkanai Sikder ..	I
19	Joynal Abdin ..	I
	Jalisha Board Primary.	
22	Abdul Hamid Kha ..	I
23	Abdul Bari ..	II
	Halta Board Primary.	
27	Satyendra N. Roy Choudhury ..	II
	Goma U. P.	
43	Khitish Chandra Guha ..	II
	W. Sealghunia U. P.	
45	Nagendra Nath Howlader ..	II
46	Lafti Ali Khan ..	II
	S. Durgapara F. Primary.	
50	*Ram Ranjan Dey ..	I
51	*Niranjan Ch. Nag ..	II
52	*Tara Kanta Chakraverty ..	I
54	*Mukundalal Majumder ..	I
55	*Ram Ratan Das ..	I
	Sunderkati U. P.	
56	*Abinash Chandra Das ..	II
57	*Santi Ranjan Sarkar ..	II
	Lakimpara Bhurpara Board Primary.	
64	*Sorabali Sikder ..	II
65	Anwar Ali Sikder ..	II
66	Jinnat Ali Gasi ..	II
67	Abdul Hamid ..	II
	Khasmoheshpur U. P.	
71	Md. Abdul Aziz ..	II
	Maj Angaria F. Maktab.	
76	Khorshed Ali ..	I
77	Kasem Ali ..	I
78	Montazuddin ..	I
79	Abdul Majid ..	II
	E. Nalua F. Maktab.	
84	Abdul Aziz ..	I
85	Ayen Ali ..	I
	Maj Baherchar Maktab.	
86	Shamsul Haque ..	II
	Khudrakati F. Maktab.	
88	Khaliler Rahman ..	II
	Kabiraj F. Maktab.	
91	Abdul Latif Khalifa ..	II
	N. Halencha F. Maktab.	
94	*Abdur Rahman Howlader ..	I
	N. Dhaparkati F. Maktab.	
98	*Abdur Rashid ..	I
	S. Baligram Maktab.	
100	Abdur Rahim Howlader ..	II
	N. Hauna F. Maktab.	
101	Safizuddin Mea ..	I
102	Kanchan Ali ..	II
103	Sherazuddin Kha ..	II
	Char Rabipur Maktab.	
110	Sonamuddin Kha ..	II
	N. Lakhirpasa Maktab.	
112	Moslem Ali Gasi ..	I
	Maj Baherchar Maktab.	
115	Abdul Kader ..	II
	S. Baligram F. Maktab.	
116	Afsaruddin Gasi ..	II
	Patuakhali Centre.	
	Haktulla Board Primary.	
1	Ananta Kumar Majhi ..	I
	Kuripaika Board Primary.	
2	Abdur Rashid ..	II
	Rajganj Chandkhali B. P.	
3	Afezuddin Taluqdar ..	I
4	Amjed Ali Howladar ..	II
	Kalika F. Board Primary.	
8	Bazlur Rahaman ..	II
	S. Muradia Final Primary.	
10	Abdul Hashem ..	II
11	Kalam Khan ..	I
12	Abdul Karim ..	II
13	Abdul Latif ..	II

Roll No.	Name.	Division.
	Laukati F. Primary.	
14	Basanta Kumar De	I
15	Srimanta Kumar Pal	I
16	Debendra Nath De	I
17	Anil Kumar Das	I
18	Satish Chandra Pal	I
	Santoshdi Board Primary.	
19	Maminuddin	II
20	Sher Ali	I
	N. Muradia Final Primary.	
21	Harendranath Mistri	I
22	Sujauddin	I
23	Belayet Hossain Howladar	II
24	Mir Muzaffar Ali	I
25	Mir Abdul Khaleq	II
	Char Garabdi Cheaper-type Primary.	
34	Amjad Ali	II
	N. Lohalia Final Primary.	
35	Nibaran Chandra Pal	I
36	Jatindra Nath Pal	I
37	Nepal Chandra Pal	II
39	Upendra Nath Pal	II
40	Nakuleswar Ghosal	II
	Pajakhali F. Maktab.	
45	Narayan Chandra Sil	II
	Patuakhali G. T. Practising Primary.	
46	Hazrat Ali (No. 1)	I
	Dharandi Board Primary.	
48	Krishna Kumar Paul	I
49	Sarat Chandra Sil	I
50	Dinesh Chandra Kundu	II
	Hazikhali Final Primary.	
60	Sarat Chandra Sil	II
	W. Muradia Board Primary.	
63	Abdul Halim	II
64	Md. Harunal Rasid Khan	II
	Haktulla Board Primary.	
69	Md. Easin Biswas	II
	Itbaria Board Primary.	
74	Serajuddin Howladar	II
	Badura Srirampur F. Maktab.	
81	Nur Mahammad	II
	Pakshia Final Maktab.	
83	*Moslemuddin Ahmed	I
85	Hafezuddin Ahmed	II
	S. Algi Final Maktab.	
105	*Abdul Mazid Howladar	I
	Falikhali F. Maktab.	
114	Abdur Rashid	II
	Dibnapur Final Maktab.	
123	Eakubali Khondakar	I
	Hatalia Final Maktab.	
132	Amzed Ali	II
133	Keramat Ali	II

Roll No.	Name.	Division.
	S. Nalduani F. Maktab.	
135	Safikuddin	I
136	Abdul Hakim	II
137	Ali Akbar	II
138	Nabi Nawaz Kha	II
	Ghopkhali F. Maktab.	
141	Ali Hoshen	II
142	Md. Joynuddin	II
	Caurjanikati F. Maktab.	
148	Mazizuddin Ahmed	II
	S. Pangaria F. Maktab.	
151	Abdul Rasid Molla	I
	Galachipa Centre.	
	Sutabaria C. Primary.	
1	*Mati Lal Das	II
3	*Harendra Lal Rakshit	II
	Bauria F. P.	
9	Khetra Mohan Howladar	I
	Hogalbunia F. Primary.	
11	Bidya Charan Sarkar	II
	Atkhali F. Primary.	
14	Ramesh Chandra Roy	I
	Algi Tafalbaria B. P.	
17	Rajeswar Majumdar	I
	Baragopaldi B. P.	
18	*Abul Kashem	II
19	Santi Ranjan Mukherji	II
20	Munsur Ali	I
	Ichadi B. P.	
26	Abdur Rahman	I
27	Amir Hossain	I
	Charchandrail B. P.	
28	Abdur Rahman Khan	I
30	Abdul Hashem	I
	Neta Rangabali B. P.	
31	Abdur Razzak Mia	I
	Badura B. P.	
32	Abdul Kader	I
35	Amir Ali	I
36	Mobarek Ali	II
38	Adam Ali	I
	Panpatty B. P.	
41	Md. Mafizuddin	I
	Dashmiona B. P.	
42	*Jinnat Ali	I
43	Ali Hossain	II
44	*Abdus Sobhan	I
45	Md. Ishaque	II
46	*Shamsul Hoque	II
49	*Gyasuddin	II
	Panpatty F. Maktab.	
50	Kobbad Ali	I
51	Fazar Ali	II
52	Sona Mia	I

Roll No.	Name.	Division.
	Naluabagi B. P.	
53	Hatem Ali	I
54	Kashem Ali	II
55	Nur Mohammad	I
	W. Naluabagi (II) F. M.	
56	Rustamali Khan	II
	W. Naluabagi (I) F. M.	
59	Kazem Ali	II
	Koatkhali F. M.	
64	Md. Kashemali Akan	I
65	Khalilor Rahman Khan	I
66	Md. Kashemali Mridha	I
	Chhota Kazal F. M.	
70	Mobarekali	II
71	Abdul Majid	II
	Chinabunia F. M.	
72	Sujat Ali	II
73	Md. Moslem	II
	N. Chalitabunia F. M.	
75	*Md. Abdul Khaleque Howladar	I
	W. Auliapur F. M.	
80	Ahammed Ali	I
83	Abdul Jabbar	II
84	Abdur Rahim	II
86	Kanchan Ali Sarif	I
	C. Sailabunia F. M.	
89	Abdul Kader	I
90	Abdul Ghani	I
	Auliapurhat F. M.	
93	*Abdus Sobhan	II
94	Moslemuddin (No. II)	II
	Badurahat F. M.	
95	Serjan Ali Howlader	I
96	Akram Ali Howlader	II
	Kharizzama F. M.	
98	Akkel Ali	II
	N. Gazalia F. M.	
101	Azahar Ali Mia	II
102	Fazle Ali Howlader	II
103	Kamaluddin Mia	II
	Kalirchar Badarpur F. M.	
107	Afser Ali Khan	II
	Haridra Khali F. M.	
108	*Ali Akbar	II
109	*Altafar Rahman	II
	Auliapur B. P.	
110	Mir Mosharraf Hossain	I
111	Abdul Latif	I
112	Jobeda Khatun	I
114	Mosmt. Nur Jahan Begum	I
	Chhota Auliapur F. M.	
115	Mosmt. Gol Kaher	II

Roll No.	Name.	Division.
	Bauphal H. E. School Centre.	
	Bilbilash B. P.	
1	*Abdus Sattar	II
2	*Abdul Mamin Khan	II
	Dhandi Bahadurpur Maktab.	
5	*Nagendra Chandra Shil	II
6	Satish Chandra Shil	II
	Madhabpur Primary.	
7	*Subodh Ranjan Howladar	I
8	*Manoranjan Biswas	I
9	*Abul Kasemullah	I
	Singrakati Primary.	
11	*Jagadish Ch. Chakravarty	II
	Dariabad Primary.	
14	Jatindra Nath Brahma	I
15	Keshabranjan Das	II
16	Usharani Das	II
17	Tajemali Biswas	II
	C. Ghursakati Primary.	
20	Manohar Rari	II
	Rajapur B. P.	
26	*Satya Charan Sarkar	I
28	*Alimaddin Howladar	II
	Dhulia Nawab Kutchery.	
29	*Ramesh Ch. Deb Nath	I
30	*Ramesh Ch. Chakrabarty	II
31	*Hakim Ali	I
32	*Abdul Gafur	I
	West Bilbilash Maktab.	
33	Nagendra Nath Ray	II
	Pakdal Primary.	
35	*Sudhanya Lal Sarkar	I
	Patilapora Primary.	
38	Manoranjan Adhikari	II
	Narayanpasha B. P.	
42	*Md. Asgarali Talukdar	I
43	*Jatindra Nath Pal	II
	Rajnagar Primary.	
47	*Ashutosh Das	I
	E. Maha Sraddhi Maktab.	
50	Janaki Nath Dhupi	II
	Gasani B. P.	
53	*Abdul Malek	II
55	Abdul Hashem	II
58	Kazi Naiya Mia	II
59	Serajul Huq	II
	Hosnabad Free Maktab.	
62	Abdul Hashem	II
	Kachua Dalima Maktab.	
63	Md. Ali Ashraf	II
64	Abdul Wajed	II
65	Abdul Kader	II

Roll No.	Name.	Division.
	Shoula Cheaper-type.	
68	Abdul Kader ..	I
69	Mobarak Ali ..	I
	Bara Dalima Maktab.	
71	*Abdul Karim ..	I
72	*Abdul Jalil ..	II
73	*Md. Sajeduddin ..	I
	Dhandi Bahadurpur Maktab.	
77	Tojambar Ali ..	II
	N. Madanpura Maktab.	
78	*Md. Ismail ..	I
79	Sekandar Ali ..	II
	N. Kanakdia Maktab.	
80	Sherali Koral ..	II
81	Daliluddin ..	II
82	Kala Mia ..	I
84	Amina Khatun ..	II
85	Samsul Huq ..	II
	C. Indrakul Maktab.	
86	Azaharuddin ..	II
87	*Menhajuddin ..	I
88	Md. Lal Sharif ..	II
91	Saderali Sharif ..	II
92	Abdur Rahim ..	II
	W. Bilbilash Maktab.	
93	*Saleha Khatun ..	I
95	Abdul Hai ..	II
	Madanpura B. P.	
97	Azahar Ali ..	II
98	Samsul Huq ..	II
	Karkhana Maktab (II).	
99	Jahan Ara Khatun ..	II
	C. Madanpura Maktab.	
100	*A. B. Md. Serajuddin ..	II
	Kalta Maktab.	
103	Chand Bara Bibi ..	II
	E. Sanewar Maktab.	
104	Faraj Ali ..	II
105	Tajuddin Ahmed ..	II
106	Sabdar Ali ..	II
	Keshabpur Maktab.	
107	Aulad Ali ..	II
	Mithapukuria Maktab.	
108	Rustam Ali ..	II
109	Joynal Abedin ..	II
	Matbaria Maktab.	
112	*Ali Hussain Khan ..	I
113	Hasan Ali ..	I
	W. Sitka Maktab.	
114	Gayzaddin ..	II
	Dhalapara Maktab.	
115	Fazlur Rahman Mallik ..	I
116	Md. Serajul Huq ..	II

Roll No.	Name.	Division.
	Mendipur Maktab.	
119	Mujaffarali Bhuia ..	II
120	Abdul Ali ..	II
	S. E. Kasipara Maktab.	
122	Samsul Huq ..	II
	Joyghora Maktab.	
123	*Sherali Gazi ..	I
	Boultali Maktab.	
127	*Abual Kasem ..	I
	Karkhana (No. 1) Maktab.	
128	Azaharuddin ..	II
	Madarban Maktab.	
129	*Bazlul Huq ..	I
130	*Sader Ali ..	I
	Satrakanda Maktab.	
132	Md. Ayezuddin ..	II
	Hogla Maktab.	
135	*Habibar Rahman ..	II
136	*Aminuddin ..	II
	W. Kanakdia Maktab.	
139	Md. Yasin Ali ..	II
140	Abdul Momin ..	II
141	Abdul Wajed ..	II
	C. Bharipasha Maktab.	
143	Lotfel Huq ..	I
	N. Maminpur Maktab.	
147	*Md. Israil ..	II
149	Afajuddin ..	II
150	*Kaminuddin ..	II
	Saplakhali B. P.	
151	Golam Rahman Molla ..	I
152	*Abdul Gafur ..	II
	Balia Maktab.	
156	Ajahar Ali ..	II
	Gulithamouza Maktab.	
157	Kanchan Ali ..	II
	Sabupura Maktab.	
160	Abdul Rob ..	I
	Chand Pal Maktab.	
161	Serajuddin Sikder ..	II
162	Belayet Hossain Molla ..	II
163	Meher Ali ..	II
	E. Indrakul Maktab.	
166	*Abdul Khaleq ..	I
167	*Khademali Molla ..	I
168	*Sefer Ali ..	II
	Sadhakgunje Maktab.	
169	Abdur Rashid Sikdar ..	II
	Barguna Centre.	
	S. Ramna F. Primary.	
2	*Md. Amjed Ali ..	II

Roll No.	Name.	Division.
	Ayla Chandkhali Board Primary.	
4	Sasi Bhushan Howladar	I
5	Md. Mohabbat Ali Howladar	II
	Joar Karuna F. Maktab.	
6	*Harkumar Shil	II
7	*Nagendra Kumar Shil	I
8	*Manoranjan Sikder	I
9	*Sovaranjan Sikder	II
	Choto Makamia Board Primary.	
10	*Sitanath Howladar	I
11	*Gauranga Chandra Nath	I
12	*Gouranga Ch. Mandal	I
14	Shyama Kanta Bepari	II
	Bibichini F. Primary.	
15	Swadesh Kumar Guha	II
16	Ahindra Bh. Biswas	II
	Dowatala F. Primary.	
17	*Naresh Chandra Sarker	I
18	*Jitendra Chandra Sarker	I
19	*Girindra Lal Paul	I
20	*Md. Wazed Ali Howladar	I
	Majidbaria Board Primary.	
21	*Sonamaddi Mredha	II
	N. Betagi F. Primary.	
23	*Sreemati Parul Bala Nandy	I
24	*Sumirmal Kumar Nandy	II
25	*Md. Esmail Khan	II
	Kumrakhali F. Primary.	
30	*Debendra Nath Adhikery	II
31	*Jajneswar Howlader	II
33	*Atahar Ali Howladar	I
	Kalirtabak Board Primary.	
34	*Mafizuddin	II
35	*Motaharuddin	II
36	*Hazrat Ali	II
37	*Paban Ali Gazi	I
38	*Habibur Rahman	II
39	*Aminuddin	II
	Baragourichanna Board Primary.	
40	*Delwar Hossain	I
41	*Badrunnessa Khatun	I
42	*Ala Uddin Ahmed	II
	Ayla Lemua F. Primary.	
43	*Nur Mohammad	II
	Kalaimudafat F. Maktab.	
44	*Rajendra Chandra Dhubi	II
	Dhankhali F. Primary.	
45	Jadu Nath Misra	II
46	Ajahar Ali	I
47	Abdul Aziz	I
	Dhankhali Board Primary.	
49	Dharaniswar Chakraverty	II
50	Dabendra Nath Gomosta	I
	North Sona Khali F. Primary.	
51	Nikunja Behari Biswas	II
	Kuknahat F. Primary.	
53	Tajem Ali	II

Roll No.	Name.	Division.
	Kathaltali Board Primary.	
57	Md. Abdul Majid	I
58	Md. Safizaddin	II
59	Md. Hochon Ali	II
	E. Rampur F. Maktab.	
64	Md. Sahev Ali Howladar	I
	Karuna Mokamia F. Maktab.	
66	*Md. Mir Samsuddin	I
67	*Md. Daliluddin	II
68	*Md. Sekandar Ali	II
	Joar-Karuna F. Maktab.	
70	*Md. Joynalabdin	I
	Choto Mokamia F. Maktab.	
71	*Md. Eunus Gazi	I
72	*Md. Fasihal Alam	I
73	*Md. Goizaddi Howladar	II
75	*Md. Asmat Ali Kha	II
	Piprakhali Maktab.	
76	Md. Anesali Bepari	II
	Ghatakar Andua F. Maktab.	
78	Md. Khajahan Ali	II
79	*Md. Kasem Ali	I
80	Md. Abdul Hashem	II
	S. Pathakata F. Maktab.	
82	*Abdul Majid Khan	I
	Lemua Khajura F. Maktab.	
83	*Aminuddin	II
84	*Abdus Samad	I
85	*Abdul Karim	I
86	*Zobaidah Khatum	I
	E. Gudighata F. Maktab.	
87	*Md. Wajid Ali Khan	I
88	*Md. Hasun Ali	I
89	*Md. Abdul Aziz Akhan	I
90	*Mohammad Ullah	I
	Dalbhanga F. Maktab.	
92	Akram Ali Mia	II
	S. Kumrakhali F. Maktab.	
93	*Abdur Rahman Mallik	II
94	*Mamtazuddin Howladar	II
	N. Manashatali F. Maktab.	
95	*Ali Mohammad Gazi	I
96	*Abul Hashem	I
97	*Ali Ahmad Gazi	II
	Charpara F. Maktab.	
98	*Wafizuddin	I
	Ayla Adaburia F. Maktab.	
99	*Md. Abdul Hamid	I
100	*Md. Ainuddin	I
101	*Md. Akkel Ali	I
	Raibhoglakurtala F. Maktab.	
105	*Matiar Rahman	II
	Dhalua F. Maktab.	
107	*Abdulkarim Howladar	I

Roll No.	Name.	Division.
	Hazarbigha F. Maktab.	
109	*Khalilur Rahaman ..	I
	Andharmanik F. Maktab.	
110	*Muktar Ali ..	I
112	*Keramat Ali Howladar ..	II
	Tulatala F. Maktab.	
114	*Momin Uddin ..	I
115	*Zinat Ali ..	I
116	*Adam Ali Khan ..	I
	Kalaimudafat F. Maktab.	
117	*Mofeluddin ..	I
118	*Abdul Mazid ..	I
119	*Abdul Hamid ..	I
120	*Amzed Ali ..	II
121	*Md. Shafiuddin ..	II
	Rayertabak Board F. M.	
132	*Latifun Nessa ..	I
	Badurkhali F. Maktab.	
123	*Mamtaj Uddin ..	I
124	*Kanchan Ali Khan ..	II
	Gulishakhali F. Maktab.	
127	*Md. Gaizuddin ..	II
	Nali F. Maktab.	
138	*Abdul Karim Sikder ..	I
	W. Itbaria F. Maktab.	
140	*Nabab Ali Khandaker ..	I
	Chunakhali Board Primary.	
142	Afsaruddin ..	I
143	Md. Kanchanali (I) ..	II
144	Afazuddin ..	II
145	Md. Kanchan Ali (II) ..	I
146	Abul Kasem ..	I
	Digharbaliatali F. Primary.	
147	*Ali Ahmed ..	I
149	*Kasemali ..	I
	Nishanbaria F. Primary.	
151	*Nurul Huda Howladar ..	II
	Kaljpur F. Maktab.	
153	*Hafizaddin ..	I
154	*Seeendar Ali ..	I
155	*Md. Sona Mia Talukdar ..	I
156	*Md. Naya Mia ..	I
157	Eakubali Khan ..	I
159	*Nizamaddi ..	I
160	*Azaharuddin ..	I
	North Chalitabunia F. Maktab.	
166	*Abul Kashem ..	I
167	*Daliluddin ..	II
168	*Abul Hashem ..	I
	Chaura Chalitabaria F. Maktab.	
171	*Maminaddin ..	I
172	*Yusoof Gazi ..	I
	Faridgonj F. F. Primary.	
173	Joynal Abadin ..	I
174	Amedali ..	I
175	Anwar Ali ..	I
176	Belait Hossain ..	II
177	Suleman Khan ..	I
178	Sultan Mahmud Khan ..	II
180	Kanchan Ali ..	II

Roll No.	Name.	Division.
	Tungibaria Board Primary.	
181	*Wazedali Khan ..	I
182	*Md. Abual Hashem Khan ..	I
	Jhoraknali Munshipara F. Maktab.	
184	*Chhaijuddin Ahmed ..	II
185	*Arsed Ali Matbar ..	I
186	Khorsed Ali Matbar ..	II
	Laskarpur F. Maktab.	
187	*Md. Sorafatulla Sikdar ..	I
	North Jhorakhali F. Maktab.	
188	*Mamtazuddin ..	I
189	*Ajahar Ali ..	II
190	*Md. Mainuddin ..	I
191	*Adamali ..	I
192	*Ahmadali ..	I
193	*Maminuddin ..	I
196	*Daliluddin ..	I
	Dalbugonj F. Maktab.	
199	Tajammal Ali ..	I
	Kukula Gojkhali F. Maktab.	
205	*Abdul Azij ..	I
	Perojpur Government High School Centre.	
	Bara Bokatia F. P.	
1	*Judhisthir Ch. Kunda ..	I
	Magura Board Primary.	
7	*Mohendra Nath Das ..	I
8	*Binapani Chanda ..	I
	E. Amrajuri Primary.	
11	*Jadab Chandra Paik ..	II
	Kalaia Board Primary.	
14	*Mohendra Nath Mistri ..	II
	Nandipara F. P.	
20	Anil Ranjan Mirdha ..	II
	C. Amrajuri F. P.	
27	Mukunda Lal Kunda ..	II
	Gopalpur Amrajuri F. P.	
29	Ajit Kumar Sarkar ..	II
30	Nogendra Nath Bepari ..	II
	Katholia Board Primary.	
33	Bipin Behari Mondal ..	II
34	Jagneswar Mondal ..	II
	Namazpur F. P.	
36	*Dhirendra Nath Mistri ..	II
	C. Pargola F. P.	
38	*Manindra Nath Saha ..	II
39	*Shyama Charan Saha ..	II
40	Sarbeswar Shaha ..	II
	Lokhakati F. P.	
41	*Sudhir Kumar Nag ..	I
42	*Monoranjan Das ..	I
43	*Monindra Nath Ghorai ..	II
44	*Hem Nolini Ghosh ..	II

Roll No.	Name.	Division.
	Choliaha F. P.	
46	Norendra Nath Brahma ..	II
48	*Sib Sankar Das ..	II
50	Anil Chandra Guha ..	II
	Nalbunia F. P.	
51	Ganesh Ch. Bepari ..	II
52	*Swarna Lata Bepari ..	II
	Rajarkati F. P.	
53	Lolit Kr. Ghorami ..	II
	W. Gandharbha F. P.	
60	*Debendra Nath Roy ..	II
	W. Tejdaskati F. M.	
63	Hashemali Khan ..	I
	Rajarkati F. M.	
64	*Shafizuddin Sheikh ..	I
65	*Nefsarali Majhi ..	I
66	Mostafaali Sikder ..	II
67	Abdul Hakim Molla ..	II
68	Akubali Molla ..	II
	Namazpur F. M.	
70	*Abdul Hamid Mollik ..	I
71	*Abdur Rahman Howlader ..	I
72	*Abdul Wajed Sheikh ..	I
73	*Abdul Jabbar Howladar ..	I
74	Mokshedali Howladar ..	II
	Keshorta Board M.	
77	Akbar Ali Molla ..	II
78	Wajed Ali Fakir ..	II
	Kathalia F. M.	
83	Abdul Motaleb ..	II
	Sota Biraljuri F. M.	
86	*Modasser Rahman ..	I
	Par Saturia B. P.	
90	Aliar Rahman ..	II
	W. Laksmidia F. M.	
99	Md. Anes Mollik ..	II
100	*Abdus Samad Molla ..	I
	Jolagati B. P.	
104	Halima Khatun ..	I
	N. W. Sealkati F. M.	
111	*Buzrag Ali ..	I
112	*Joynal Abedin ..	I
113	*Nesar Ahmed ..	I
114	*Fazlul Hak ..	II
	S. E. Jolagati F. M.	
116	*Hemayetuddin Khan ..	II
	Sankarpur F. M.	
119	Hosenali Khan ..	II
120	Neseruddin ..	II
	C. Sankarpur F. M.	
121	Sundarali Howlader ..	II
122	Abdul Hakim Howlader ..	II
	Falaibunia F. M.	
123	Keramatali Sikder ..	II

Roll No.	Name.	Division.
	Khamkata F. M.	
126	Martujan Molla ..	
	Joykul F. M.	
131	Noor Mahammad ..	I
	Iron Joykali Board Primary.	
138	*Md. Eakub Ali ..	I
	Banaripara Centre.	
	Dattapara F. Primary.	
1	*Shibeswar Shaha ..	I
2	Gopeswar Shaha ..	I
4	Nakuleswar Shaha ..	I
5	Shanti Bhusan Shaha ..	II
	Chattalbari F. Primary.	
13	*Upendranath Biswas ..	I
	Nghashkati Board Primary.	
16	Mohendra Nath Bepari ..	I
17	*Nagendra Nath Kirtania ..	I
18	Kalimohon Bepari ..	II
19	Nagendra Nath Roy ..	I
	Bainkati F. Primary.	
20	*Ananta Kumar Halder ..	II
21	*Mohendra Nath Das ..	II
22	*Sudhi Ranjan Mridha ..	II
	Rohitlabumi F. Primary.	
24	Sonatan Somaddar ..	II
25	Nishi Kanta Halder ..	II
	Betbani F. Primary.	
26	Mukunda Behari Majhi ..	I
	Hoglabunia F. Primary.	
28	Jitendra Nath Halder ..	II
	Kumarkhali F. Primary.	
30	*Upendra Nath Datta ..	I
31	*Shuklal Dey ..	II
32	*Bhola Nath Ghosh ..	I
33	Benoy Bhusan Majumder ..	II
	Dirgha Kalibari F. Primary.	
36	Thakurchand Halder ..	II
	Balibabla F. Primary.	
37	Brajendra Nath Adhikari ..	I
38	*Nirod Behari Mondal ..	I
39	*Surendra Nath Mandal ..	I
	Joypur F. Primary (No. 1).	
40	Khitish Chandra Barai ..	I
	Joypur F. Primary (No. 2).	
41	*Chandra Kanta Baidya ..	I
42	Mahendra Nath Manjhi ..	I
44	*Mana Ranjan Halder ..	I
	Singkhali F. Primary.	
47	*Sailendra Nath Mandal ..	II
48	Upendra Nath Halder ..	II
49	*Satis Chandra Halder ..	II
50	*Mana Ranjan Roy ..	II
	N. Hoglabunia F. Primary.	
51	Dina Nath Baidya ..	II

Roll No.	Name.	Division.
	Babuan Ghoshkati F. Primary.	
57	Kunja Behari Sikder ..	II
	Dhamsarmission F. Primary.	
58	Hachenali Bepari ..	II
59	*Hachen Ali Khan ..	II
	Salbunia F. Primary.	
63	*Pulin Behari Das ..	I
	Manafal F. Primary.	
67	Ananta Kumar Mandal ..	II
	Bainkati F. Primary.	
70	Gozendra Nath Baral ..	II
72	Babu Ram Mistri ..	II
	Ghoshkati Kalibari Primary.	
78	*Mukunda Behari Mandal ..	II
	Azalia F. Primary.	
80	*Surendra Nath Halder ..	I
	S. Baibunia F. Primary.	
83	*Kumari Dhana Maladebi ..	I
	Idilkati Board Primary.	
89	*Jitendra Nath Mistry ..	I
90	Satis Chandra Mandal ..	II
	Daibari F. Primary.	
91	Makhanlal Howlader ..	II
92	Sasi Bhusan Baroe ..	II
93	Brajendra Nath Mallik ..	II
95	Khirode Behari Sikder ..	II
96	Nilkanta Halder ..	II
	Pathalipara F. Primary.	
98	*Niranjan Das ..	I
99	*Sibeswar Meghmala ..	I
100	Ashutosh Mukhapadhya ..	I
101	Madhab Chandra Meghmala ..	II
102	Devendranath Meghmala ..	II
	Juluhar Matbari F. Primary.	
105	Narendra Nath Mazumder ..	II
	Sagarkanda F. Primary.	
106	Mana Ranjan Nath ..	II
107	Syam Lal Nath ..	II
	Raghatala Board Primary.	
108	*Syamlal Mistry ..	I
109	*Rakhal Ch. Mandal ..	I
110	*Nagendra Nath Mandal ..	I
111	*Abdul Malek Sardor ..	II
112	Chandra Kanta Majhi ..	II
	Brahmankati F. Primary.	
113	*Chandra Kanta Mistry ..	II
114	Mahendra Nath Biswas ..	I
115	*Dhirendranath Majumder ..	I
116	*Ananta Behari Majumder ..	II
	Gubinda Guhakati F. Primary.	
117	Prionath Mandal ..	II
	Muninag F. Primary.	
122	*Hemansu Ranjan Datta ..	I
124	Niranjan Chandra Sil ..	II

Roll No.	Name.	Division.
	W. Iluhar F. Maktab.	
128	*Abdul Hamid Akon ..	II
129	*Md. Hatem Ali Bali ..	II
	W. Udaykati F. Maktab.	
130	*Md. Abdul Mannan ..	I
131	*Muzaffar Hossain ..	II
	Sonapur F. Maktab.	
132	*Tazem Ali Fakir ..	II
	Borsakati F. Maktab.	
135	Jonab Ali Molla ..	II
	Jugirkanda Maktab.	
140	Nur Mohammad Mridha ..	II
	Eksharapara Board Primary.	
141	*Md. Osman Ghani ..	I
142	*Md. Abdus Sobhan ..	I
143	*Mohammad Ali Khan ..	I
	Umarerpar Maktab.	
144	Md. Mafizor Rahman ..	II
146	*Md. Shah Sher Ali ..	I
	Baraibunia F. Maktab.	
149	A. M. Anwar Hossain ..	II
150	Moslehuddin ..	I
151	Ensan Uddin ..	I
152	Noor Muhammad Sikder ..	II
	Hoglabunia F. Maktab.	
154	Shaik Abdul Mannan ..	II
155	Nabab Ali Sheik ..	II
	Mabutkanda Board Primary.	
156	Abdul Hoque ..	II
157	*Sayder Rahman ..	I
158	*Saleh Uddin Ahmed ..	I
159	Jennat Ali ..	I
	Mahutkanda Board Primary.	
160	Salek Ahmad ..	II
	Atipara Board Primary.	
161	Abdul Malek Howlader ..	II
	E. Dhamsar F. Primary.	
162	Manaur Ahmed ..	II
163	Yusuf Ali Dakua ..	II
	Jhanjhania F. Maktab.	
168	*Hashem Ali ..	I
169	*Abdul Hamid Molla ..	I
170	*Saber Ali ..	II
171	*Abdul Latif Molla ..	II
	Baithakata F. Maktab.	
175	*Showkat Ali ..	II
177	Altafunnessa ..	I
	Jhanjhania F. Maktab.	
178	*Golapjan ..	I
179	Sufia Khatoon ..	I
	Naloaree Board Primary.	
185	*Moslemuddin ..	II
	Baildia Board Primary.	
186	Ainul Haque ..	II,

Roll No.	Name.	Division.
	Balehari F. Maktab.	
188	*Md. Eusaf Ali	I
189	*Abdul Hamid	I
	Rajabari F. Maktab.	
190	*Mafizuddin	II
191	*Md. Shahid Ali	II
192	*Md. Abdur Rahman	II
193	*Amjed Ali	I
194	*Moksed Ali	II
195	*Mozharuddin	I
196	*Samsher Ali	II
	S. E. Shohagdal F. Maktab.	
198	*Md. Taher Ali	I
199	*Md. Azizul Haque	I
200	*Md. Rustom Ali	II
201	*Md. Abdur Rahman	II
	Kamarkati F. Maktab.	
202	Seraj Uddin	II
203	*Md. Abdul Jabbar	II
204	Md. Jainuddin	II
	Baildia F. Maktab.	
210	Joynal Abdin	I
211	Lehajuddin	I
212	Wazed Ali	II
	Mathbaria H. E. School Centre.	
	Hatempur Board.	
3	*Premananda Kirtania	II
	Kathaltali F. Primary.	
4	Gopal Ch. Mistry	II
7	*Matilal Goswami	I
	Kalipur F. Primary.	
9	Satish Ch. Howladar	I
10	*Krishna Kanta Chakrabarty	I
11	Umesh Chandra Ojha	II
13	*Umesh Ch. Howladar	II
	Bara Masur F. Primary.	
15	Shyama Kanta Ray	II
	W. Mithakhali B. P.	
16	Mahendranath Mitra	II
18	Rajendranath Ray	II
20	Kumud Behari Kirtania	II
21	Nirode Behari Kirtania	II
22	Rajendranth Biswas	II
23	Sarat Chandra Ray	II
28	Nur Muhammad	II
	E. Fuljhuri F. M.	
30	Charu Bala	II
	Kakrabunia F. Primary.	
32	Jajneswar Gharami	II
	Bara Haji F. Primary.	
34	Abdur Rashid Jamaddar	II
35	Mozammel Haque	II
	Tengra F. Primary.	
37	Md. Yusuf	II
38	*Md. Fakhrul Islam	I
	Betmore F. M.	
39	*Nagendranath Howladar	II
	Chhota Soula F. M.	
40	Prakash Ch. Haldar	I
41	Atul Chandra Sikdar	II
	Jnanpara F. Primary.	
42	*Surya Kanta Bal	II

Roll No.	Name.	Division.
	E. Andharmanik F. M.	
46	Monoranjan Das	I
	Debipur F. M.	
49	Md. Haidar Ali	II
50	Abdul Latif Khan	II
52	Abdul Kader	II
	Debipur Board School.	
53	*Abdul Kader Khan	I
54	*Abdur Rashid	II
55	Alima Khatun	II
	Manik Khali F. M.	
56	Md. Hasenali Howladar	I
57	Abdur Rashid Howladar	II
58	Abdul Gafur Sarif	II
	E. Fuljhuri F. M.	
64	Safizuddin Ahmed	II
65	Motaharuddin	I
66	Abdul Hamid Akon	II
67	Keramatali Akon	II
	C. Bara Masua F. M.	
75	Abdul Karim Fakir	II
	Makuma Board School.	
79	Abdul Hamid Mridha	II
81	Abdur Rab	II
82	Abdul Latif Mridha	II
83	Abdul Barek	II
84	Fatema Khatun	II
	Ibrahimabad F. M.	
85	Abdul Haque	II
86	Abdul Hashem	II
	Chhota Soula F. M.	
90	Nur Muhammad Khan	II
	C. Bara Soula F. M.	
92	Harmuj Ali Akon	II
	Chhota Harji F. M.	
94	Md. Majibur Rahman	II
95	Md. Ali Hussain	II
96	Abdul Kader	I
97	Habibur Rahman	II
98	Abdul Hamid	II
	E. Andharmanik F. M.	
104	Alkazuddin Ahmed	II
105	Esahaque Uddin	II
106	Md. Ensan Mallik	II
	Bhandaria Centre.	
	Gouripur Goodhope Primary.	
2	*Jatindra Nath Howlader	I
3	*Bani Kanta Howlader	I
4	*Monoranjan Howlader	I
	Baishnaber Honla.	
5	*Upendra Nath Nath	II
6	Narayan Chandra Das	II
	Chouaria Board Primary.	
7	*Pramatha Kanta Howlader	II
8	*Abdul Hakim Howlader	II
	Medirabad Tarabunia U. P. (1).	
10	*Debendra Nath Howlader	II

Roll No.	Name.	Division.
	Modirabad Tarabunia U. P. (2).	
13	*Bashanti Kumari Sen	I
14	*Mojammal Hossain Talukder	I
15	*Matiar Rahman Howlader	II
16	*Rajani Kanta Mistri	I
17	*Abdul Khaleque Howlader	I
18	*Mohendra Nath Howlader	II
19	*Habibar Rahman Howlader	II
	S. Shialkathi Board Primary.	
20	*Satish Chandra Halder	II
21	Benode Behari Ozah	II
22	Shurja Kanta Howlader	I
	E. Telikhali U. P.	
23	*Abual Kasem Howlader	II
	S. Talgasia U. P.	
24	Arshed Ali Sikder	I
	Banai U. P.	
25	*Monoranjan Nag	I
	Niz Bhandaria F. Maktab.	
27	*Nittananda Mandal	I
	Dhawa Board Primary.	
28	*Amjed Ali Mirdha	I
29	Hashem Ali Howlader	II
	C. Showjdia F. Primary.	
34	Asmatali Khalifa	II
	N. Nadmulla F. Primary.	
36	Nirode Behari Edbar	II
37	Sheik Maktbul Ali	II
	Kaikhali Binapani Primary.	
39	Hemanta Kumar Mandal	II
41	Rabindra Nath Mandal	II
42	Madhab Chandra Majhi	II
43	Rajani Kanta Halder	II
	E. Bhandaria F. Maktab.	
45	Md. Shamsul Haque Fakir	II
	N. Paikhali Maktab.	
47	Md. Mofazzal Hossain Molla	II
	E. Chensir F. Maktab.	
49	Mokbul Ahmed	II
51	Abdul Aziz	II
	N. Bhetabaria F. Maktab.	
55	Abdul Aziz Howlader	II
56	Erfanuddin Howlader	II
	Bhitabaria Board Maktab.	
57	Mirza Fazlal Karim	II
	Chingrakhali F. Maktab.	
59	Munsur Ahmed	II
	Charkhali F. Maktab.	
60	*Abdul Khaleque	II
	Sealkathi F. Maktab.	
65	*Abdul Karim Howlader	I
66	*Md. Akkel Ali Khalifa	I
67	Md. Tuzambar Ali Howlader	I
	Soulgalia Model F. Maktab.	
68	*Nurzehan Begum	I
69	*Abdul Hakim Jamaddar	I
70	*Abdul Wahed Khan	I
72	Abdul Kader Howlader	I
	S. Telikhali F. Maktab.	
73	*Esahaque Ali Sepai	II

Roll No.	Name.	Division.
	Niz Bhandaria F. Maktab.	
74	*Abdul Hamid Talukder	I
75	*Md. Oliullah Mallik	I
76	*Abdul Hamid Akon	I
77	*Dadon Ali Zamodar	I
78	*Abdul Barek Bhuia	I
79	*Ajhar Uddin Khan	I
80	*Shamsul Haque Kazi	I
81	*Mokbuler Rahman	I
	Bhandaria Model Maktab.	
83	*Rafizuddin Akon	I
84	*Abdul Kader Sardor	II
85	Syed Sakayet Ali	II
86	Waresh Ali	II
87	*Nural Haque Munshi	II
88	*Modasser Hossain Howlader	II
	S. Bhandaria Maktab.	
89	*Alfazuddin Howlader	II
90	*Abdur Rashid Kazee	II
	Patikelghata F. Maktab.	
93	Shaheb Ali Jamadar	II
	Rajkar Board School Special Centre.	
	Rajkar Board Maktab.	
1	Musammat Anwara Khanam	II
	Hogla Board Primary Special Centre.	
	Hogla Board Primary.	
1	*Ambia Khatun	I
	Latimsar Special Centre.	
	Latimsar F. Maktab.	
1	*Mosamat Hurun Nessa Khatun	I
2	*Musammat Rakeya Khatun	I
3	*Mussammat Rakeya Khatun	I
	Manpasa F. Maktab Special Centre.	
	Manpasa Maktab.	
1	*Amena Khatun	II
2	*Kulsumnessa Khatun	II
	W. Polat Maktab.	
3	*Jarina Khatun	II
	Desh Khag Kata Girls' Maktab Special Centre.	
	Private.	
1	Asia Khatun	I
	Khudra Kati Special Centre.	
	Khudra Kati Maktab.	
1	*Jobeda Khatun	I
	Aduna F. Primary Special Centre.	
	Adhuna F. Maktab.	
1	*Parul Bala Das	II
	Chhotagourichanna Board Maktab Special Centre.	
	Chhotagourichhana Board Maktab.	
1	*Musammat Hazarat Khatun	I
	Santiwar Special Centre.	
	Santiwar F. Primary.	
1	*Niharkana Sirker	I

ABUL HASHEM KHAN CHOUDHURY,
Inspector of Schools.

Rajshahi Division.

Jalpaiguri, the 28th December 1934.

List of candidates declared to have passed the Primary (Maktab) Final Examination of 1934.

Candidates marked with " E " has passed in English (optional).

FIRST DIVISION.

(Arranged in order of merit.)

Dinajpur District.

Dinajpur Centre.

1 Emtaz Ali Biswas (E), Namunia Maktab.
2 Tafazzal Hossain Khan (E), Boaldar Maktab.
3 Saber Mohammad (E), Haripur Maktab.
4 Maya Roy (E), Saradeswari Vidya Mandir.
5 Kasimuddin Shaikh (E), Namunia Maktab.
6 Syed Yashin Ali Shah (E), Haripur Maktab.
7 Md. Habibar Rahman (E), Sarangai Palashbari Board Primary Final.
8 Md. Kamaluddin Mian, Bisapar Maktab.
9 Ashraf Ali Ahmed (E), Jahanabad Maktab.
10 Zahural Haque Mandal, Rambhadrapur Primary Final.
11 Azizuddin Ahmed (E), Bhabki Primary Final.
12 Ramesh Chandra Roy, Talpukur Primary Final.
13 Ashrafunnesa (E), Puria Primary Final.
14 Arabuddin Sarkar, Boaldar Maktab.
15 Azaruddin Mandal, Boaldar Maktab.
16 Satish Chandra Roy, Bangalbari Primary Final.
17 Md. Abdus Samad Sarkar, Bhotgachh Maktab.
18 Jilla Rahman Sarkar, Kalikapur Board Primary Final.
19 Umarani Ghosh (E), Saradeswari Vidya Mandir.
20 Basanti Devi (E), Saradeswari Vidya Mandir.
21 Md. Asimuddin, Sadipur Maktab.
22 Payaruddin Ahmed, Paunapur Primary Final.
23 Mohammad Hossain Mian (E), Jahanabad Maktab.
24 Md. Ibrahim Mian, Attore Maktab.
25 Reazul Islam, Bistoir Board Primary Final.
26 Tamizuddin Ahmed, Bistoir Board Primary Final.
27 Md. Mazaharali Mian, Panchkoor Primary Final.
28 Mafiruddin Ahmed, Kismat Fateh Jangpur Board Primary Final.
29 Abdul Jabbar Mian, Bistoir Board Primary Final.
30 Sajaman Ali Mian, Radhikapur Primary Final.
31 Taibuddin Ahmed (E), Haripur Maktab.
32 Daniel Marandi (E), B. M. S. Boarding School.
33 Hasenuddin Molla, Rambhadrapur Primary Final.
34 Md. Abdul Kabir Sarkar, Puria Primary Final.
35 Lilazuddin Ahmed, Kapsia Primary Final.
36 Akbarali Sarkar, Kalikapur Board Primary Final.
37 Nireswar Ghosh, Kalaibari Primary Final.
38 Abdul Kuddus, Saidpur Primary Final.
39 Moslehuddin Ahmed (E), Bora Primary.
40 Md. Abdul Jabbar (E), Sarangi Palashbari Board Primary.
41 Salimuddin Ahmed (E), Sikarpur Primary.
42 Shaikh Ishaque Ali Sarkar (E), Subarnapur Primary.
43 Md. Samsuddin Mian, Darail Primary.
44 Md. Dhanibulla Mian, Kaliganj Maktab.
45 Setaruddin Ahmed, Sadipur Maktab.
46 Md. Nubal Haque Mian, Sadipur Maktab.
47 Chaitanya Charan Roy (E), Malancha Primary.
48 Harendra Nath Sarkar, Kalaibari Primary.
49 Brojendra Nath Ghose, Kalaibari Primary.
50 Gopal Chandra Roy (E), Saradeswari Vidya Mandir.
51 Paresh Chandra Chakravarty (E), Saradeswari Vidya Mandir.
52 Paulin Pal, B. M. S. Santhal Boarding Primary.

Thakurgaon Centre.

1 Mt. Jamila Khatun (E), Mirdangi Board Primary Final.
2 Md. Tezaruddin (E), Sitlai Maktab.
3 Nazibar Rahman, Doulatpur Board Primary Final.
4 Md. Samiruddin (E), Mirdangi Board Primary Final.
5 Md. Shah Jahan Ali, Nandanpur Board Primary Final.
6 Daghuram Barma, Chhota Sultanpur Primary Final.
7 Md. Jabed Ali (E), Sitlai Maktab.
8 Abdul Kayum, Doulatpur Board Primary Final.
9 Mt. Naima Khatun (E), Sitlai Maktab.
10 Md. Ashrafali Choudhury, Maricha Primary Final.
11 Saharab Ali Ahmed, Panchgharia Maktab.
12 Md. Safir Hossain (E), Kamarpukur Maktab.
13 Daberuddin Ahmed, Krishnapur Primary Final.
14 Mt. Ara Sakhayatunnessa Chowdhuraın, Maricha Primary Final.
15 Binapani Sen (E), Khansama Primary Final.
16 Jatindra Nath Sarkar (E), Birganj Primary Final.
17 Md. Azizul Haque (E), Senihari Board Primary Final.
18 Md. Hamed Bakhsh, Bhelatoir P. U. Primary Final.
19 Md. Jonabali, Gopalpur Board Primary Final.
20 Abdul Hakim Shah, Gopalpur Board Primary Final.
21 Md. Roushanali (E), Mirdangi Board Primary Final.
22 Safirannessa Khatun, Keyempur Board Primary Final.
23 Mt. Khodeza Khatun, Maheshpur Primary Final.
24 Jogendra Kumar Bhoumik (E), Kamarpukur Maktab.
25 Torabuddin Ahmed, Duhusai Primary Final.
26 Md. Eusuf, Belsara Primary Final.
27 Santaram Barma, Faridpur Primary Final.
28 Ramesh Chandra Roy, Nandanpur Board Primary Final.
29 Falaram Barman, Chhota Sultanpur Primary Final.
30 Md. Abdur Rahim, Baikunthapur Primary Final.
31 Khagendra Nath Adhikari, Sannyasipara Primary Final.
32 Emar Ali Ahmed, Duhusai Primary Final.
33 Md. Sahamuddin, Bhelatoir P. U. Primary Final.
34 Md. Abdul Majid, Bhorbheri Primary Final.
35 Abedali Mian (E), Madanpur Primary.
36 Nasiruddin Ahmed (E), Nandangaon Primary.
37 Kalimuddin Ahmed, Isinia Primary.
38 Abdul Gani (E), Debipur Primary.
39 Aserali Ahmed, Sarhadda Primary.
40 Md. Abdur Rahim Mian (E), Ghani Maheshpur Maktab.
41 Md. Yusuf, II (E), Balsara Primary.
42 Md. Kalu Rahman, Duhusai Primary.
43 Giasuddin, Balsara Primary.
44 Md. Rahimuddin, Mirdangi Board Primary.
45 Lodiram Agrawala, Khansama Primary.
46 Durgadas Agrawala, Khansama Primary.
47 Kedar Chandra Roy, Lakshmipur Primary.
48 Manindra Nath Modak (E), Gopalpur Board Primary.
49 Rajani Kanta Giri, Sannyasipara Primary.
50 Kedar Nath Barma, Sannyasipara Primary.

Balurghat Centre.

1 Md. Abdul Jabbar Mian, Harigram Maktab.
2 Md. Eashin Ali Mian (E), Kamalabari Primary Final.
3 Idrish Molla, Sitahar Maktab.
4 Nasiruddin Mandal, Daralhat Primary Final.
5 Md. Isahaque Ali Mian, Harigram Maktab.
6 Satish Chandra Mandal (E), Esobpur Primary Final.
7 Afsar Ali Mian, Mandain Board Primary Final.
8 Md. Afsar Ali Mian, Rahimapur Maktab.
9 Narayani Dasi, Bolla Primary Final.
10 Anil Kumar Roy Chowdhury (E), Esobpur Primary Final.
11 Mt. Rowshan Ara (E), Koshurail Maktab.
12 Gafur Ali Dewan, Bolla Primary Final.
13 Samsuddin Ahmed, Kamalabari Primary Final.
14 Jatindra Nath Karmakar, Bolla Primary Final.
15 Gazendra Nath Mandal (E), Istara Board Primary Final.
16 Md. Ibrahim Hossain (E), Ausha Maktab.
17 Rajendra Nath Mandal, I (E), Esobpur Primary Final.
18 Ramjan Ali Mandal, Daudpur Primary Final.
19 Fasiluddin Sarkar, Dumoir Board Primary Final.
20 Sudhir Chandra Sarkar (E), Istara Board Primary Final.
21 Hemanta Kumar Ghosh (E), Esobpur Primary Final.
22 Anadibhusan Mazumdar (E), Istara Board Primary Final.

23 Abdur Rahman Sarcar (E), Phulbari Primary Final.
24 Md. Asan Ali Mandal (E), Aranagar Primary Final.
25 Md. Bajiruddin Mandal (E), Koshurail Maktab.
26 Kazi Nabiruddin, Darailhat Primary Final.
27 Md. Jainal Abedin Shah (E), Sisa Maktab.
28 Nayantulla Mandal, Mandain Board Primary.
29 Mahiuddin Ahmed, Doralhat Primary.
30 Amiruddin Mandal, Kamalabari Primary Final.
31 Md. Yasin Ali (E), Masalpur Board Primary Final.
32 Monsurali Dewan, Nadoor Bangdom Primary.
33 Abdul Mannan Mian, Harigram Maktab.
34 Md. Hazratali Mandal (E), Keshkurail Maktab.
35 Khoda Baksh Mandal (E), Keshkurail Maktab.
36 Md. Jamiruddin, Ausha Maktab.
37 Mahendra Nath Barma (E), Gutin Primary.
38 Sachindra Nath Mandal (E), South Jahanpur Primary.

District Rangpur.

Rangpur Centre.

1 Md. Abdur Rahman (E), Kismat Habu Maktab.
2 Shamsuddin Miah, Mohadipur Board Primary.
3 Md. Sayadar Rahman (E), Kismat Habu Maktab.
4 Nazir Hossain (E), Borokhata Fakirpara Maktab.
5 Md. Sultan Ali (E), Kalagachi Maktab.
6 Abdul Jalil Miah, Mohadipur Board Primary.
7 Bimal Chandra Ray (E), Ranipukur Board Primary.
8 Asabuddin Ahmed (E), Rajballav Free Primary.
9 Md. Khoda Baksh (E), Roghunathpur Maktab.
10 Masum Ali (E), Matukpurhat Primary.
11 Md. Abdul Mannan (E), Moubhasa Primary.
12 Ebaruddin Ahmed (E), Dhap Free Primary.
13 Md. Hesabuddin Miah (E), Banderpara Board Primary.
14 Abdus Sattar (E), Dhumerkuti Maktab.
15 Md. Habibulla (E), Jogodishpur No. 1 Maktab.
16 Salimuddin Ahmed (E), Rajballav Free Primary.
17 Md. Hakibulla (E), Abuliahat Primary.
18 Md. Shajatulla (E), Rajballav Free Primary.
19 Shushoma Debi (E), Shalbon Free Primary.
20 Umanath Barman, Khokhotia Primary.
21 Sashi Bhusan Barman (E), Saropukur Primary.
22 Abdul Haque (E), Gokulpur Board Primary.
23 Abdul Hamid (E), Gokulpur Board Primary.
24 Abdur Rahim Miah (E), Ranipukur Board Primary.
25 Md. Mansur Ali, Sankardaha Maktab.
26 Dharoni Lal Barma (E), Mahiganj Free Primary.
27 Mofizuddin Ahmed (E), Rajballav Free Primary.
28 Nitai Das Chakrabarty (E), Senpara Free Primary.
29 Ahmed Hossain (E), Ranipukur Board Primary.
30 Mofizuddin (E), Lokshonpur Burirpukur Maktab.
31 Rajendra Nath Barman, Deodoba Board Primary.
32 Md. Tasaruddin, Sankardaha Maktab.
33 Abdus Sattar (E), Kalagachi Maktab.
34 A. K. M. Mazammal Haque (E), Dhumerpar Maktab.
35 Abdur Rahman (E), Dhumerpar Maktab.
36 Susil Kumar Chakrabarty (E), Salbon Free Primary.
37 Belarani Debi (E), Salbon Free Primary.
38 Sahiruddin Miah (E), Saropukur Primary.
39 Md. Tofeluddin (E), Moubhasa Primary.
40 Ganendra Kishore Chakravarty (E), Mahiganj Free Primary.
41 Nilima Debi (E), Salbon Free Primary.
42 Nur Baksh Molla (E), Natibpur Board Primary.
43 Gopal Chandra Mahanta, Boozrukhazipur Primary.
44 Musammat Kulsam Nessa, Khotkhotia Primary.
45 Dakshina Mohon De (E), Senpara Free Primary.
46 Radha Charan Pal (E), Senpara Free Primary.
47 Md. Makbul Hossain Miah (E), Rajballav Free Primary.
48 Abdus Sattar (E), Raghu Maktab.
49 Abul Hossain (E), Motukpurhat Primary.
50 Manmohan Ray (E), Romonganj Board Primary.
51 Md. Afazuddin Miah, Tilokpara Board Primary.
52 Satish Chandra Das (E), Senpara Free Primary.
53 Md. Hossainuddin (E), Kalagachi Maktab.
54 Hesanuddin Ahmed, Habu Free Primary.
55 Aparna Ghose (E), Salbon Free Primary.
56 Borhanuddin, Kumarganj Maktab.
57 Ahmed Ali (E), Roghunathpur Maktab.
58 Md. Jabbaruddin Mandal, Tilokpara Board Primary.
59 Satyendra Nath Barma, Saropukur Primary.
60 Momdil Hossain (E), Ganjipur Board Primary.
61 Md. Osman Gani Miah, Khoragaoh Purbapara Maktab.
62 Md. Ebrahim Miah, Khotkhotia Primary.
63 Md. Akbar Hossain (E), Banderpara Board Primary.
64 Md. Johurali Miah (E), Rajballav Free Primary.
65 Abdul Jabbar Miah, Sikarpur Maktab.
66 Prokash Chandra Das (E), Natibpur Board Primary.
67 Md. Jaynal Abedin (E), Saudpara Board Primary.
68 Abdul Kayum, Thengjhara Primary.
69 Md. Akbar Ali (E), Kalagachi Maktab.
70 Ajit Kumar Barman, Menanogar Board Primary.
71 Abul Horess Md. Sulaiman Miah (E), Satghoriapara Maktab.
72 Md. Esaq Ali (E), Alomnogor Free Primary.
73 Krishna Chandra Nath (E), Shakharipara Board Primary.
74 Mofizuddin Ahmed (E), Abuliahat Primary.
75 Abdul Gafur (E), Gokulpur Board Primary.
76 Jitendra Kumar Adhikary (E), Shakharipara Board Primary.
77 A. K. M. Khabiruddin (E), Dhumerpar Maktab.

Gaibandha Centre.

1 Krishna Lal Sarkar (E), Sicha Board Primary.
2 Mafizal Haque (E), Sicha Board Primary.
3 Rahima Khatun (E), Burailpara Maktab.
4 Amsar Ali, Baura Kanchibari Maktab.
5 Bopin Behari Mahanta, Char Bolka Board Primary.
6 Azizar Rahman (E), Pearapur Free Primary.
7 Arjudhar Mahanta, Daldalia Primary (II).
8 Naziruddin (E), Kanchibari Board Primary.
9 Ananta Kumar Das (E), Sicha Board Primary.
10 Abdul Kurdus Sarkar, Chandpara Arafi Maktab.
11 Shah Taslimuddin (E), Boali Maktab.
12 Bhupendra Sarkar (E), Bharatta Board Primary.
13 Kabejuddin (E), Sicha Board Primary.
14 Habibulla Khan (E), Pearapur Free Primary.
15 Md. Lutfar Rahman Molla (E), Tengorjani Maktab.
16 Md. Abdul Kuddus (E), Kumidpur Maktab.
17 Sailesh Chandra Dutta (E), Hurabhayakhan Primary.
18 Nivanani Debi (E), Satailbatail Primary.
19 Abdul Wadud (E), Pearapur Free Primary.
20 Madhab Chandra Sarkar (E), Sicha Board Primary.
21 Anil Nath Dutta (E), Hurabhayakhan Primary.
22 Abul Hossain Akanda, Khord Ruhia Primary.
23 Jamatullah (E), Paran Board Primary.

Kurigram Centre.

1 Md. Afazuddin (E), Baushmari Maktab.
2 Nanda Kumar Mohanta, Bamnachora Board Primary.
3 Rohini Kanta Chakraverty (E), Dobariarbhitta Primary.
4 Nirmala Sundari Debi, Senerkhamar Primary.
5 Mohiruddin Sarkar, Bamnachora Board Primary.
6 Najibar Rahman Sarkar, Ratiram Primary.
7 Khaizuddin Shoikh, Subarpar Board Primary.
8 Debendra Nath Adhikari (E), Baldia Monmohini Primary.
9 Md. Mozammal Haq Sarkar, Bozra Tobokpur Primary.
10 Azizar Rahman Bepari (E), Raiganj Board Primary.
11 Bopin Chandra Barman, Mogolbasa Primary.
12 Salimulla Bepari (E), Gagla Board Primary.
13 Mohendra Chandra Barma (E), Khuniagach Maktab.
14 Md. Yakubali Sarkar (E), Charneuashi Maktab.
15 Md. Samiruddin, Khuniagach Maktab.
16 Preo Nath Dutta (E), Kurigram Practising.
17 Sarbananda Barman, Ratipur Primary.
18 Abiruddin Ahmed (E), Rajarhat Primary.
19 Md. Abdul Kader Sarkar, Charneuashi Maktab.
20 Basanta Kumar Das, Boraburi Board Primary.
21 Amulyadhan Ray (E), Gagla Board Primary.
22 Md. Serajuddin Shekh, Bozra Tobokpur Primary.
23 Md. Fazarali (E), Dhepdhepi Primary.
24 Nur Baksh Shaikh, Belgacha Primary.

25 Md. Hossain Ali (E), Baushmari Maktab.
26 Mohiuddin Sarkar, Modhupur Primary.
27 Md. Abdul Gofur (E), Chaudoghoriarchar Maktab.
28 Moslemuddin Ahmed, Jodurchar Maktab.
29 Md. Abdul Samad Sarkar (E), Khamar Bozra Primary.
30 Muhammadali Khondker, Madarganj Maktab.
31 Haridas Sarkar (E), Gagla Board Primary.
32 Kamakshya Prosad Chatterjee (E), Kurigram Practising.
33 Abdul Hakim, Shubolpar Board Primary.
34 Ashini Kumar Barman, Tobokpur Board Primary.
35 Mohabbat Ali (E), Dewanerkhamar Board Primary.
36 Md. Jalaluddin Sarkar, Tobokpur Board Primary.
37 Imanali Khondker, Ramdutta Board Primary.
38 Lamsheruddin Pramanik, Khalilganj Primary.
39 Akbar Hossain Mondal, Rotonpur Primary.
40 Md. Abdur Rahman, Roghuray Maktab.
41 Ramani Mohan Barman, Ratipur Primary.
42 Mohesh Chandra Das, Dhaurerkooti Primary.

Nilphamari Centre.

1 Mussammat Hasina Khatoon (E), Chatnai Islamia Maktab.
2 Md. Zobanuddin (E), Singergari, Maktab.
3 Md. Naziral Islam, Chaura Board Primary.
4 Pulin Kumar Bose (E), Nilphamari Practising.
5 Zohanuddin Sarkar, Kanialkhata Board Primary.
6 Choyenuddin Ahmed (E), Bishmoori Board Primary.
7 Md. Tofauluddin (E), Khalisha Chapani Maktab (II).
8 Sitanath Barman (E), Khaturia Primary.
9 Abu Alam Imam Muhammad (E), Nilphamari Practising Primary.
10 Bejoy Krishna Das Mohanta (E), Gopaljhar Primary.
11 Md. Joynal Abedin (E), Khoga Barabari Maktab.
12 Md. Hamizuddin, Chaura Board Primary.
13 Md. Nazibar Rahman Shah (E), Durakooti Primary.
14 Md. Abdul Majid (E), Kochukata Board Primary.
15 Md. Abdul Jabbar (E), Singergari Maktab.
16 Taslimuddin Ahmed (E), Bajitpara Maktab.
17 Md. Obaidar Rahman (E), Bajitpara Maktab.
18 Md. Ekramul Haque (E), Khoga Barabari Maktab.
19 Sailesh Chandra Kundu (E), Nilphamari Practising.
20 Md. Naimuddin (E), Durakooti Primary.
21 Md. Mafizuddin (E), Bajitpara Maktab.
22 Bhagirath Chandra Roy, Jamirbari Maktab.
23 Kutubuddin Ahmed, Shoyragondha Board Primary.
24 Md. Mofazzal Husain (E), Ketkibari Maktab.
25 Mussammat Matia Khatoon, Chapra Primary.
26 Biman Krishna Kundu (E), Nilphamari Practising Primary.
27 Md. Jamaluddin (E), Goregram Kanchanpara Maktab.
28 Md. Jalaluddin (E), Durakooti Primary.
29 Md. Ziamatali (E), Darwani Maktab.
30 Pramada Bala Debi, Gopaljhar Primary.
31 Md. Gajorali Sarkar, Angarpara Maktab.
32 Md. Kasimuddin (E), Goregram Kanchanpara Maktab.
33 Md. Borhanuddin, Magura Dolapara Primary.
34 Sarojini Sundari (E), Goyabari Primary (I).
35 Md. Rafiquddin (E), Goregram Kanchanpara Maktab.
36 Romesh Chandra Singha (E), Dimla Jhalapara Primary.
37 Md. Abdul Gani (E), Singergari Maktab.
38 Md. Nabiruddin, Musarat Panialpukur Maktab.
39 Md. Abdul Hamid, Kazirhat Maktab.
40 Md. Ashrof Ali (E), Goregram Kanchanpara Maktab.
41 Md. Nasimuddin (E), Nilphamari Town Maktab.
42 Nezamuddin Ahmed (E), Rashati Primary.
43 Hachimulla, Kanialkhata Board Primary.
44 Md. Zobairuddin, Chapra Primary.
45 Mussammat Khodeja Khatoon (E), Ketkibari Maktab.
46 Md. Bahanuddin, Chaura Board Primary.

Pabna District.

Pabna Centre.

1 Md. Serajul Haque (E), Khayer Suti Maktab.
2 Md. Azimuddin (E), Koladi Maktab.
3 Radha Ballav Sarkar (E), Kuchlia Primary.
4 Md. Jalaluddin (E), Puspapara Maktab.
5 Sudhir Kumar Kundu (E), Ruppur Primary.
6 Narendra Nath Daw, Ekdanta Primary.
7 Md. Sekandar Ali (E), Koladi Maktab.
8 Md. Mozzammel Hoque, Bheramara Primary.
9 Nitya Gopal Sutradhar (E), Sen Dighulia Board Primary.
10 Harendra Nath Sarkar, Badal Primary.
11 Harendra Nath Roy (E), Kuchlia Primary.
12 Md. Zainuddin, Binyabari Primary.
13 Sarat Chandra Chakravarty (E), Saratganj Board Primary.
14 Md. Bande Ali (E), Khorda Chandpur Board Primary.
15 Md. Abul Hossain (E), Shibpur Maktab.
16 Md. Faizuddin, Shibpur Maktab.
17 Md. Afazuddin, Pushpapara Maktab.
18 Md. Ansar Ali, Khorda Chandpur Board Primary.
19 Ram Narayan Basak (E), Singa Free Primary.
20 Md. Rahamatulla (E), Sen Dighulia Board Primary.
21 Sripada Das (E), Mongolgram Primary.
22 Md. Habibur Rahman (E), Sen Dighulia Board Primary.
23 Phanindra Nath Ghosh, Khorda Chandpur Board Primary.
24 Ram Ballav Nandi (E), Biri Lahiri Bari Board Primary.
25 Md. Yeasin (E), Raipur Board Primary.
26 Md. Nural Haque (E), Dhaleswar Maktab.
27 Prafulla Narayan Sarkar (E), Biri Lahiri Bari Board Primary.
28 Md. Manirul Islam, Ruppur Maktab.
29 Md. Rafiuddin (E), Kakra Maktab.
30 Abul Mansur (E), Dhaleswar Maktab.
31 Md. Abdul Hamid, Ullat Chandipur Board Primary.
32 Birendra Nath Sarkar (E), Malanchi Free Primary.
33 Md. Khabiruddin, Saratganj Board Primary.
34 Narayan Chandra Talukdar, Gopalnagar Primary.
35 Md. Abdur Rahman (E), Kakra Maktab.
36 Md. Jobed Ali, Lakshmipur Board Primary.
37 Kayemuddin Ahmed, Mohendrapur Maktab.
38 Md. Sanaulla, Ullat Chandipur Board Primary.
39 Md. Abdul Based (E), Demra Primary.
40 Md. Muizuddin, Sen Dighulia Board Primary.
41 Bhadu Nath Biswas (E), Chandpur Board Primary.
42 Md. Anwar Ali, Sabhar Primary.
43 Md. Abdul Jobber I, Char Dulai Maktab.
44 Subodh Chandra Nath (E), Fakitpur Primary.
45 Manoranjan Karmakar, Khorda Chandpur Board Primary.
46 Md. Sanaulla (E), Kuladi Maktab.
47 Md. Zainuddin (E), Baghalpur Primary.
48 Md. Badaruddin, Saratganj Board Primary.
49 Jasimuddin Ahmed, Haribari Primary.
50 Narayan Chandra Maitra, Malanchi Free Primary.
51 Md. Kyamuddin, Mahendrapur Maktab.
52 Md. Habibur Rahman (E), Gopalnagar Primary.
53 Amulya Chandra Sarkar (E), Chandpur Board Primary.
54 Radhapada Pal, Lakshmipur Primary.
55 Md. Yakub Ali (E), Nazirpur Primary.
56 Krisna Bandhu Saha (E), Goalgram Primary.
57 Md. Mozahar Ali, Par Faridpur Primary.
58 Nitai Chandra Das (E), Puran Kuthibari Primary.

Bera Centre.

1 Md. Mazharali (E), Bangram Maktab.
2 Gopal Chandra Seal (E), Talat Primary.
3 Md. Efazuddin (E), Dhalarchar Board Primary.
4 Md. Moyez Uddin (E), Sarisha Primary.
5 Md. Menhazuddin (E), Talat Primary.
6 Md. Jasim Uddin (E), Kazi Sarippur Maktab.
7 Jitendranath Sarkar (E), Talat Primary.
8 Md. Zainal Abedin (E), Silendah Maktab.
9 Rashik Chandra Saha (E), Nandanpur Primary.
10 Md. Eshaq (E), Kazi Sarippur Maktab.
11 Md. Wazed Ali (E), Silendah Maktab.
12 Gopendra Narayan Gangopadhyaya (E), Pundaria Primary.

13 Md. Imanali (E), Dhalarchar Board Primary.
14 Md. Gholamuddin (E), Raksha Primary.
15 Amulya Charan Haldar (E), Nandanpur Primary.
16 Khorshed Ali, Par Gopalpur Primary.
17 Syed Ali (E), Gopinathpur Board Primary.
18 Md. Nawabuddin (E), Nayanpur Primary.
19 Abani Mohan Gun (E), Chakla Board Primary.
20 Md. Shahabuddin Khan (E), Nayanpur Primary.
21 Ananta Nath Ghosh (E), Gopinathpur Board Primary.
22 Himangshu Mohan Singh (E), Pundaria Primary.
23 Jogesh Chandra Saha (E), Dudhakole Board Primary.
24 Satyendra Chandra Bhadra (E), Gopinathpur Board Primary.

Serajganj Centre.

1 Shajahan Siddique (E), Ekdala Primary.
2 Bhupendra Nath Pal (E), Rupnai Primary.
3 Md. Delwar Ali (E), Ghati Subgachha Primary.
4 Md. Mafazzal Hossain, Ghati Subgachha Primary.
5 Md. Mansur Ali (E), Ghati Subgachha Primary.
6 Kanai Lal Poddar (E), Haripur Primary.
7 Md. Abdul Aziz (E), Baniaganti Primary.
8 Sailendra Nath Saha (E), Jhikrabandar Primary.
9 Sudhir Chandra Bhadra, Rupnai Primary.
10 Md. Mujibar Rahman (E), Bhatpoari Primary.
11 Md. Hazrat Ali (E), Baniaganti Primary.
12 Md. Eskandar Ali (E), Ghati Subgachha Primary.
13 Sudhir Chandra Sarkar (E), Dhul Baora Primary.
14 Manindra Mohan Basak (E), Ekdala Primary.
15 Phanindra Nath Sarkar (E), Jhikrabandar Primary.
16 Azizul Haq (E), Kalidasganti Maktab.
17 Nagendra Nath Mahato (E), Jhikrabandar Primary.
18 Md. Moslem Talukdar (E), Bhatpoari Primary.
19 Musammat Sakhina Khatun (E), Howrah Primary.
20 Md. Abu Bakar Siddique (E), Dayal Primary.
Saradindu Sarkar (E), Jhikrabandar Primary.
22 Amarendra Lal Das (E), Jhikrabandar Primary.
23 Md. Mansur Rahman, Char Manikdiar Primary.
24 Md. Asgar Ali, Tepri Primary.
Md. Abu Nasar (E), Panchkroshi Primary.
Md. Basiruddin (E), Dublia Maktab.
27 Md. Abul Hossain (E), Ramkantapur Maktab.
Md. Darogah (E), Panchkroshi Primary.
29 Abul Hossain (E), Bhatpoari Primary.
Phanadhar Kundu (E), Danapur Primary.
31 Musammat Amena Khatun, Ramkantapur Maktab.
Md. Korban Ali, Char Kinirber Maktab.
33 Abul Khayer Khan (E), Arkandi Primary.
34 Khagendra Nath Choudhury (E), Ekdala Primary.
35 Md. Mazahar Ali (E), Char Songachha Primary.
36 Abdul Hamid, Shyampur Maktab.
37 Pran Ballava Pal, Tepri Primary.
Md. Abdul Bari, Char Kinirber Maktab.
39 Md. Mamtaz Ali (E), Ramkantapur Maktab.
40 Azizur Rahman, Khash Madhya Simulia Primary.
Amiya Kanta Lahiri (E), Gudhibari Primary.
42 Md. Mozammel Hossain (E), Char Songachha Primary.
Md. Ahmed Ali, Supgachha Maktab.
44 Md. Zaker Ali (E), Dighalia Maktab.
45 Pran Gaur Pal, Tepri Primary.
46 Kalipada Saha, Simla Primary.
47 Amanat Ali Khan, Sonatola Primary.
48 Bhupendra Nath Dev Barma, Jhikrabandar Primary.
Mozammel Haq, Ag Naikali Maktab.
50 Md. Ahsanali (E), Parkola Primary.
51 Md. Abul Hossain, Char Kinirber Maktab.
52 Md. Basiruddin, Char Manikdiar Boys' Maktab.
53 Md. Khoda Baksha, Barabaria Board Primary.
54 Md. Samiruddin (E), Dublia Boys' Maktab.
55 Harendra Nath Sur (E), Dadpur Board Primary.
56 Md. Khorshed Alam (E), Kurshi Dhitpur Boys' Maktab.
Md. Kalimuddin Talukdar (E), Char Songachha Boys' Primary.
58 Md. Azizul Haque (E), Ahsannagar Maktab.
Md. Abdur Rahman (E), Char Buranga Board Primary.
60 Qutab Uddin (E), Char Nischintapur Board Primary Maktab.
61 Md. Tozammal Hossain (E), Kantanagar Boys' Primary.
62 Md. Nasimuddin, Char Kinirber Maktab.
Md. Abdul Majid, Panchakroshi Primary.
64 Afsar Ali (E), Hossainpur Primary.
65 Jyotirmoy Chandra Saha (E), Jhikrabandar Primary.
66 Moazzam Ali, Adachaki Ullapara Primary.
67 Md. Mowla Baksha, Mandalpara Tekani Maktab.
Md. Erfan Ali (E), Hatdelua Boys' Maktab.
Subal Chandra Haldar, Baisbari Board Primary.
70 Majibar Rahman (E), Bahuli Primary.
Md. Abdul Wahed (E), Bhuiaganti Primary
Moslem Uddin, Pustigachha Boys' Primary.
73 Md. Mansur Ali, Balaiganti Boys' Primary.
Rai Mohan Biswas, Dhul Baora Boys' Primary.
75 Md. Abdul Wahed, Char Kinirber Maktab.
76 Ahmed Ali, Chanbila Boys' Maktab.
77 Md. Hassan Ali (E), Dwaria Boys' Primary.
78 Md. Karim Baksha, Dublia Maktab.
Khorshed Zaman, Adachaki Uttarpara Primary.
Md. Rostam Ali (E), Kurshi Dhitpur Boys' Maktab.
81 Md. Afzal Hossani, Char Manikdiar Boys' Maktab.
Md. Harunar Rashid, Bahuka Board Primary Maktab.
83 Mafizuddin, Barakandi Primary.
84 Md. Habibar Rahman (E), Shamashpur Primary.
Abdul Hakim, Nalsonda Board Primary.
Makhan Lal Das, Baniakandi Board Primary.
87 Md. Abdul Jabbar, Manirpur Primary.
88 Md. Mobarak Ali, Char Manikdiar Boys' Maktab.
89 Saileswar Haldar, Adachaki Primary.
90 Md. Rahimuddin (E), Bhatta Majhira Primary.
91 Md. Yusuf Ali (E), Bijganti Boys' Primary.
92 Nagendra Nath Mandal, Aguria Panchayeti Union School.
93 Ram Prasad Dey, Gudibary Primary.
94 Md. Matiar Rahman, Amdanga Boys' Maktab.
95 Md. Nazir Hossain, Fulkucha Boys' Primary.
96 Chira Ranjan Dutta, Parkola Boys' Primary.
97 Md. Ismail Hossain, Paiksha Maktab.
98 Abdul Gaffar, Khaschar Nakair Boys' Primary Maktab.
99 Jamal Uddin, Rahimpur Board Primary.
100 Md. Azhar Ali, Madarpara Boys' Maktab.
101 Abdul Hanif Siddique (E), Char Nischintapur Maktab.

SECOND DIVISION.

(Arranged according to serial number.)

District Dinajpur.

Dinajpur Centre.

1 Hakikul Haque, Bistoir Board Primary Final.
2 Mahidur Rahman (I), Bora Primary Final.
3 Mahidur Rahman (II), (E) Bora Primary Final.
4 Khaliluddin Ahmed (E), Bora Primary Final.
5 Abdul Gafur, Bejora Primary Final.
6 Matihar Rahman (E), Haripur Maktab.
7 Serajuddin Ahmed (E), Haripur Maktab.
8 Emazuddin Ahmed, Ranidighi Maktab.
9 Md. Abdulla, Bindole Primary Final.
10 Md. Rekatulla, Bindole Primary Final.
11 Md. Hosséni, Bindole Primary Final.
12 Sahabat Ali, Molone Primary Final.
13 Safiuddin Ahmed, Balihara Primary Final.
14 Nasiruddin Ahmed, Balihara Primary Final.
15 Mt. Rokeya Khatun, Muralipukur Primary Final.
16 Hafezuddin Ahmed, Dalimgaon P. U. Primary Final.
17 Ayenuddin Ahmed, Radhikapur P. U. Primary Final.
18 Ajee Ahmed, Radhikapur P. U. Primary Final.
19 Jaynal Abedin, Namunia Maktab.
20 Md. Basiruddin, Attore Maktab.
21 Md. Maniruddin, Attore Maktab.
22 Jalaluddin Ahmed, Palashbari Primary Final.
23 Md. Kachabuddin Sarkar (E), Durgapur Primary Final.
24 Md. Samsuddin Sarkar, Durgapur Primary Final.
25 Azibuddin, Binnakuri Primary Final
26 Mohammed Ali Sarkar, Muradpur Maktab.
27 Md. Nazibuddin Sarkar, Muradpur Maktab.
28 Mahiuddin Ahmed, Uthrail Board Primary Final.
29 Saidur Rahman Mian, Ichhamati (I) Primary Final.
30 Md. Timur, Baikunthapur Primary Final.
31 Hesaruddin Mandal, Brahmapur Primary Final.
32 Mafizuddin Ahmed (E), Belbari Maktab.
33 Md. Kafuruddin Sarkar, Kalikapur Board Primary Final.
34 Aftabuddin Sarkar, Kalikapur Board Primary Final.

35 Fayezuddin Sarkar, Dhanjuri Santhal Primary Final.
36 Md. Sarfarazuddin Akanda, Jahanabad Maktab.
37 Sajiruddin Mandal, Mostafapur Maktab.
38 Mayezuddin Ahmed, Dolaikota Maktab.
39 Md. Fazlar Rahman Mian (E), Kulanandapur Primary Final.
40 Khagendra Nath Saha (E), Bindole Primary Final.
41 Kumari Pravabati Dasi, Bangalbari Primary Final.
42 Jatindra Nath Deb Singha (E), Barun Primary Final.
43 Kalipada Sarkar, Dalimgaon P. U. Primary Final.
44 Prativarani Mazumdar (E), Saradeswari Vidya Mandir.
45 Sudhansubala Saha (E), Saradeswari Vidya Mandir.
46 Sudhir Chandra Roy, Kt. Fateh Jungpur Board Primary Final.
47 Rajendranath Jha, Baikunthapur Primary Final.
48 Bhupendra Nath Das, Bistoir Board Primary Final.
49 Chittya Ranjan Das (E), Bindole Primary Final.
50 Ganesh Chandra Karmakar, Kesura Primary Final.
51 Upendra Nath Sarkar, Puria Primary Final.
52 Adhar Chandra Sarkar, Puria Primary Final.
53 Pero Tudu, B. M. S. Boarding School.
54 Faten Kerketa (E), B. M. S. Boarding School.
55 Helek Chandra Das, Uthrail Board Primary Final.
56 Afazuddin Ahmed, Bora Primary Final.
57 Daliluddin Ahmed, Mollapara P. U. Primary Final.
58 Samsuddin Ahmed (E), Haripur Maktab.
59 Md. Ismail (E), Farakkabad Maktab.
60 Rahimuddin Ahmed, Ranidighi Maktab.
61 Latifur Rahman (E), Bindole Primary Final.
62 Saifat Muhammad, Dharmapur Primary Final.
63 Seikh Pear Muhammad, Kalaibari Primary Final.
64 Kebaruddin Ahmed, Dalimgaon P. U. Primary Final.
65 Amiruddin Ahmed (E), Radhikapur P. U. Primary Final.
66 Nasiruddin Ahmed, Nasaratpur Benimadhab Primary Final.
67 Ashimuddin Ahmed, Ghugudanga Maktab.
68 Mahammed Hazibulla, Darail Niyamatpur Maktab.
69 Afazuddin Ahmed, Nasaratpur Primary Final.
70 Fayezuddin Ahmed, Nasaratpur Primary Final.
71 Azizur Rahman, Panchkur Primary Final.
72 Md. Naziruddin Sarkar, Kaliganj Maktab.
73 Abdur Rahman Sarkar, Kaliganj Maktab.
74 Mafizuddin Ahmed (E), Shibpur Primary Final.
75 Ramjanali Mean (E), Shibpur Primary Final.
76 Amirali Ahmed, Ichhamoti (II) Primary Final.
77 Md. Jan Baksh, Baikunthapur Board Primary Final.
78 Md. Abdur Rahman, Narayan Board Primary Final.
79 Afazuddin Mean (E), Umarpail Board Primary Final.
80 Nezamuddin Sarkar, Dhanjuri Santhal Primary Final.
81 Hashenuddin Mandal, Mostafapur Maktab.
82 Tamizuddin Sarkar (E), Mostafapur Maktab.
83 Md. Abdur Rahman Pramanik (E), Kalikabari Maktab.
84 Md. Kazemuddin, Dolaikota Maktab.
85 Omar Ali, Rahimapur Maktab.
86 Md. Aftabuddin Mandal, Motihara Maktab.
87 Profulla Kumar Nandi (E), Phulbarihat Primary Final.
88 Sanat Kumar Barma, Bangalbari Primary Final.
89 Kumari Tarunibala Dasi, Bangalbari Primary Final.
90 Sachi Kanto Sarkar, Jamuna Primary Final.
91 Rebatimohan Das, Tenhari Board Primary Final.
92 Amar Singh Barma, Sanitara Primary Final.
93 Manick Chand Barma, Nasaratpur Benimadhab Primary Final.
94 Kailash Chandra Roy, Gandalgaon Primary Final.
95 Dinodayal Adhicary, Jagannathpur Primary Final.
96 Jagadish Chandra Das (E), Salandar Maktab.
97 Kartic Chandra Das, Mollapara P. U. Primary Final.
98 Jamini Kanta Roy, Puria Primary Final.
99 Badia Hembrom, B. M. S. Boarding School.
100 Usharanjan Basak, Maharajpur Primary Final.
101 Md. Anwar Ali, Ranidighi Maktab.
102 Md. Hossain Biswas, Balipukur Primary.
103 Md. Hafezuddin, Bindole Primary.
104 Basiruddin Ahmed, Balihara Primary.
105 Md. Najibat Sarkar, Subarnapur Primary.
106 Md. Sulaiman, Malgaon Primary.
107 Tamizuddin Ahmed, Malgaon Primary.
108 Lutfar Rahman, Nolahar Board Primary.
109 Sulaimanuddin Akanda, Prankrishnapur Primary.
110 Hafezuddin Chowdhury (E), Mostafapur Maktab.
111 Mafizuddin Sarkar, Matihara Maktab.
112 Harekrishna Das Mahanta, Saraihat Primary.
113 Narendra Nath Das (E), Salandar Maktab.
114 Girish Chandra Sarkar, Puria Primary.

Thakurgaon Centre.

1 Md. Hamidar Rahman, Bholanathpur Primary.
2 Dhanibulla Mian, Bholanathpur Primary.
3 Asiruddin Sarkar, Chhota Sultanpur Primary.
4 Samiruddin Ahmed, Birganj Primary.
5 Merajuddin Ahmed, Khansama Primary.
6 Farazuddin Ahmed (E), Sarhadda Primary.
7 Tarabuddin Ahmed, Doulatpur Board Primary.
8 Md. Abdul Halim (E), Paharbhanga Maktab.
9 Basiruddin Ahmed, Darkhola Primary.
10 Badiur Rahman, Barasingia Primary.
11 Kalimuddin Ahmed, Duhusai Primary.
12 Taslimuddin Ahmed, Kadihat Board Primary.
13 Pearali Ahmed, Pardeshipara Primary.
14 Samsherali, Panchgharia Maktab.
15 Mafizuddin Ahmed, Panchgharia Maktab.
16 Jogendra Nath Roy, Nizpara (I) Maktab.
17 Bepin Chandra Roy (E), Nandangaon Primary.
18 Sachindra Mohan Barma, Debipur Primary.
19 Prasanna Kumar Roy, Maricha Primary.
20 Jonakee Chandra Roy, Lakshipur Primary.
21 Upendra Nath Sen, Chameswari Primary.
22 Rohini Kumar Barma, Gopalpur Primary.
23 Peari Mohan Nath, Baikunthapur Primary.
24 Mukunda Chandra Barma, Kuralia Primary.
25 Dukhi Ram Barma, Maminpara Primary.
26 Shyam Chandra Sarma, Duhusai Primary.
27 Aswini Kumar Roy, Batasore Primary.
28 Sachindra Nath Chowdhury, Anwara Primary.
29 Kulada Kumar Bhowmick (E), Kamarpukur Maktab.
30 Md. Reazuddin, Sitlai Maktab.
31 Abdul Baset (E), Debipur Primary.
32 Aftabuddin Ahmed, Debipur Primary.
33 Tasaruddin Ahmed, Uttampara Primary.
34 Tafizuddin Ahmed, Khansama Primary.
35 Khatibuddin Ahmed, Khansama Primary.
36 Basiruddin Ahmed, Chatnil Primary.
37 Fazlar Rahman (E), Bhatgaon Board Primary.
38 Md. Nural Hossain Mian, Kushat Primary.
39 Md. Basiruddin Mian, Basuli Primary.
40 Abdur Rashid Khan, Basuli Primary.
41 Sukurali Ahmed, Kayempur Board Primary.
42 Alimuddin Ahmed, Krishnapur Primary.
43 Abdur Jabbar Mian (E), Gopalpur Board Primary.
44 Abdul Rashid Mian (E) Gopalpur Board Primary.
45 Md. Kushumuddin, Chameswari Primary.
46 Md. Abdul, Jalali Primary.
47 Saifuddin Ahmed, Jalali Primary.
48 Jafiruddin Ahmed, Jalali Primary.
49 Fachihuddin Ahmed, Baikunthapur Primary.
50 Md. Khairul Basar, Taria Bhawani Board Primary.
51 Md. Basiruddin, Maminpara Primary.
52 Nasiruddin Ahmed, Damabir Primary.
53 Md. Mansural Hoque, Balarampur Primary.
54 Md. Abdul Sattar Muhammed (E), Chandipur Primary.
55 Mahiruddin Ahmed, Duhusai Primary.
56 Serajuddin Ahmed, Jubarhat Primary.
57 Hakimuddin Ahmed, Kadihat Primary.
58 Md. Samserali, Khongaon Primary.
59 Md. Ayenuddin, Mirdangi Board Primary.
60 Samserali Ahmed, Nandanpur Board Primary.
61 Abdul Hamid, Kamarpukur Maktab.
62 Md. Khorsed Ali, Kamarpukur Maktab.
63 Md. Kalimuddin, Baliadangi Primary.
64 Jogendra Kumar Roy, Nizpara (I) Primary.
65 Debendra Nath Roy, Nizpara (I) Primary.
66 Gheur Chand Somani (E), Birganj Primary.
67 Dhirendra Nath Das, Haripur Board Primary.
68 Silbhadra Barma, Bhorbheri Primary.
69 Ananda Mohan Roy, Maricha Primary.
70 Paghalu Chandra Roy, Lakshipur Primary.
71 Jagadish Chandra Adhikari, Gouripur Primary.
72 Rup Charan Sen, Chameswari Primary.
73 Hemanta Kumar Barma, Dakshinbatina Primary.

74 Dhaniram Barma, Chandipur Primary.
75 Bankim Chandra Giri, Sannyasipara Primary.
76 Harish Chandra Roy Chowdhury, Sannyasipara Primary.
77 Dhanahari Barma, Gopalpur Primary.
78 Jogesh Chandra Barma, Baikunthapur Primary.
79 Magheswar Barma, Johgaon Primary.
80 Kalaram Barma, Basudebpur Primary.
81 Niranjan Singha, Pardeshipara Primary.
82 Dwarika Nath Singha, Pardeshipara Primary.
83 Deburam Das, Madanpur Primary.
84 Ananga Mohan Nath, Faridpur Primary.
85 Surendra Nath Barma, Batasore Primary.
86 Birendra Kumar Sarkar, Gopinathpur Primary.
87 Sudhir Chandra Das, Madanpur Primary.
88 Aswini Kumar Das, Dakshin Batina Primary.

Balurghat Centre.

1 Mahboob Hossain Mian, Kamalabari Primary Final.
2 Jameruddin Ahmed (E), Halidana Primary Final.
3 Tamizuddin (E), Rahimapur Maktab.
4 Md. Safiuddin Mandal, Rahimapur Maktab.
5 Khayeruddin Sarkar, Gangihar Primary Final.
6 Md. Iman Baksh Mandal (E), Gangihar Primary Final.
7 Asimuddin Sardar, Raghunathpur Board Primary Final.
8 Md. Mazlul Haque Mandal, Shibpur Primary Final.
9 Md. Fazlar Rahman Mandal, Shibpur Primary Final.
10 Lal Mohammad Mian (E), Mohanpur Primary Final.
11 Tasimuddin Sarkar (E), Phulbari Primary Final.
12 Md. Safiuddin, Bamail S. Primary Final.
13 Md. Hafizuddin Mandal, Kuchila Maktab.
14 Md. Kalimuddin Mandal, Fakirganj Maktab.
15 Harunar Rasid Mian, Narai Maktab.
16 Md. Kenanuddin Mandal, Betdighi Maktab.
17 Md. Besarali Mandal (E), Betdighi Maktab.
18 Suresh Chandra Laha (E), Aranagar Primary Final.
19 Ramani Kanta Laha, Aranagar Primary Final.
20 Mahesh Chandra Mandal, Raghunathpur Board Primary Final.
21 Narayan Chandra Sarkar (E), Istara Board Primary Final.
22 Jogesh Chandra Sarkar, Ali Taib Ramkrishnapur Primary Final.
23 Md. Nasiruddin Mandal (E), Beharinagar Maktab.
24 Md. Masiruddin Mandal (E), Beharinagar Maktab.
25 Mt. Fatima Khatun (E), Beharinagar Maktab.
26 Safiuddin Ahmed, Halidana Primary Final.
27 Md. Dabiruddin Dewan, Rasakanai Primary Final.
28 Abdul Kuddus Mandal (E), Sobhanpur Primary Final.
29 Saifuddin Choudhury, Gangihar Primary Final.
30 Nafiruddin Ahmod, Sisa Maktab.
31 Md. Lutfar Rahman Mandal, Sisa Maktab.
32 Dhan Baksh Mandal (E), Chandpur Primary Final.
33 Abdul Sardar, Masarpur Board Primary Final.
34 Kazi Serazuddin, Daralhat Primary Final.
35 Mainuddin Mandal, Patiamlai Primary Final.
36 Bazlar Rahman, Dumoir Board Primary Final.
37 Safiruddin Mandal (E), Majhigram Board Primary Final.
38 Eusuf Ali Sardar (E), Majhigram Board Primary Final.
39 Saberuddin Ahmed, Jahangirpur Board Primary Final.
40 Besaruddin Mandal (E), Ramkrishnapur Ali Taib Primary Final.
41 Azimuddin Mandal, Makrampur Mission Primary Final.
42 Md. Halimuddin, Fakirganj Maktab.
43 Md. Nazibar Rahman, Chaloon Maktab.
44 Pravash Nath Rakshit (E), Ghatnagar Board Primary Final.
45 Bhupendra Narayan Talukdar (E), Istara Board Primary Final.
46 Jiban Chandra Barma, Gutin Primary Final.
47 Dayaram Mandal (E), Rasakanai Primary Final.
48 Rajendra Nath Mandal, Esobpur Primary Final.
49 Ramesh Chandra Das (E), Kashipur Primary Final.
50 Philip Kerketa (E), Makrampur Mission Primary Final.
51 Md. Kabezuddin Mandal, Beharinagar Maktab.
52 Md. Ashanali Dewan, Rasakanai Primary.
53 Sudhangshu Bhusan Sarkar, Kashipur Primary.
54 Amirali Mandal, Sundarpur Primary.
55 Abdus Samad, Raghunathpur Primary.
56 Mafizuddin Sardar, Patiamla Primary.
57 Dabiruddin Sarkar (E), Phulbari Primary.
58 Ramanath Das, II, Suripukur Primary.
59 Srimati Ali Shabha Haro (E), Kuyardu Mission Primary.

District Rangpur.

Rangpur Centre.

1 Kalyani Ghose (E), Shalbon Free Primary.
2 Kali Prasad Choudhury (E), Shalbon Free Primary.
3 Rabindra Kishore Chakravarty (E), Mahiganj Free Primary.
4 Ijanuddin Ahmed (E), Abuliahat Primary.
5 Md. Osman Gani, Abuliahat Primary.
6 Kasimuddin Ahmed, Salapak Free Primary.
7 Fazle Rahman, Monohar Board Primary.
8 Md. Abdur Rahim (E), Borobil Primary.
9 Abdul Gafur (E), Motukpurhat Primary.
10 Mofizuddin (E), Mornia Maktab.
11 Md. Faezuddin, Namuri Maktab.
12 Aseruddin (E), Debipur Board Primary.
13 Asad Ali (E), Konapara Primary.
14 A. K. M. Akbar Ali, Dhumerpar Maktab.
15 Abdur Rauf, Kumarganj Maktab.
16 Tasamal Hossain, Shampur Maktab.
17 Mafizuddin Sarkar, Lakshanpur Burirpukur Maktab.
18 Meherunnesa (E), Baroghoria Primary.
19 Md. Hanifuddin Miah, Tilokpara Board Primary.
20 Md. Mafizuddin Paikar, Tilokpara Board Primary.
21 Mohesh Chandra Ray (E), Romoniganj Board Primary.
22 Bancharam Barman (E), Debipur Board Primary.
23 Nazimuddin Shaikh, Ketakibari Board Primary.
24 Sabitri Rani Sarkar (E), Salbon Free Primary.
25 Harish Chandra Maitra (E), Salban Free Primary.
26 Renukana Sen Gupta (E), Senpara Free Primary.
27 Usharani Ghose (E), Senpara Free Primary.
28 Sarada Mohan Sarkar (E), Alamnagar Free Primary.
29 Kshitish Chandra Das (E), Dhap Free Primary.
30 Karuna Kanta Chatterjee, Mahiganj Free Primary.
31 Nirendra Kishore Singha, Thakurbari Board Primary.
32 Nizamuddin Ahmed, Abuliahat Primary.
33 Md. Abdus Samad, Minanagar Board Primary.
34 Masaraf Hussain, Girijapur Board Primary.
35 Saber Mian, Manahar Board Primary.
36 Abdul Majid, Manahar Board Primary.
37 Md. Abul Hossain (E), Senpara Board Primary.
38 Md. Lutfar Rahman, Thinghjhora Primary.
39 Nawab Ali, Nohali Primary.
40 Moniruddin (E), Marula Maktab.
41 Md. Ajimuddin, Namuri Maktab.
42 Rahim Baksha (E), Konapara Primary.
43 Abdul Jobbar Mian (E), Konapara Primary.
44 Sarafuddin (E), Konapara Primary.
45 Taslimuddin Mian (E), Chowdhurain Maktab.
46 Abdul Jabbar Mian (E), Dulhapur Maktab.
47 Abdul Bari Mian (E), Dulhapur Maktab.
48 Akbar Hossin (E), Dhumerkuti Maktab.
49 A. T. M. Mamtazuddin (E), Dhumerpar Maktab.
50 Kuddus Ali Khandkar, Thakurbari Board Primary.
51 Kasimuddin, Menanagar Primary.
52 Mosammat Asma Khatoon, Bujruk Hazipur Primary.
53 Md. Mafizuddin Mandal, Bujruk Hazipur Primary.
54 Md. Abdul Awal (E), Keshabpur Palichora Maktab.
55 Mafizuddin, Mostafapur Maktab.
56 Tafiluddin Kazi, Radhanagar Maktab.
57 Amjad Hossain, Jagadishpur (I) Maktab.
58 Hasimuddin, Dohazary (I) Primary.
59 Abdul Jabbar, Dohazary (I) Primary.
60 Abdul Kader Mian (E), Nesbatganj Maktab.
61 Khajeruddin Sarkar, Barabala Board Primary.
62 Md. Karimuddin Mian (E), Banderpara Board Primary.

63 Md. Hafizuddin (E), Buzruk Santoshpur Maktab.
64 Md. Kasiruddin (E), Buzruk Santoshpur Maktab.
65 Md. Ahsamuddin (E), Buzruk Santoshpur Maktab.
66 Tarapada Das, Tulshipur Board Primary.
67 Upendra Nath Barma (E), Guddinazi Board Primary.
68 Chakradhar Barman (E), Bhadui Primary.
69 Hanshu Ram Barman (E), Horati Primary.

Gaibandha Centre.

1 Surendra Nath Sarkar (E), Bharatta Board Primary.
2 Bonomali Shah (E), Kalmu Primary.
3 Basarat Ali Sarkar, Sakhoil Board Primary.
4 Jahiruddin Pramanik, Shibram Primary.
5 Kamaluddin, Char Belka Board, Primary.
6 Md. Abdul Haq (E), Poran Board Primary.
7 Md. Bajitulla, Poran Board Primary.
8 Khalilur Rahman, Baidyanath Board Primary.
9 Din Muhammad Sarkar, Hurabhayakhan Primary.
10 Gayasal Huq Pramanik, Hurabhayakhan Primary.
11 Farajuddin, Trimohini Board Primary.
12 Sariatulla Sarkar, Boali Maktab.
13 Abdul Jabbar Sarkar, Boali Maktab.
14 Safiulla Akanda, Boali Maktab.
15 Abdul Hamid Sarkar, Chakmara Maktab.
16 Majibar Rahman Mandal, Kochuahat Board Primary.
17 Mafizuddin Akanda, Gochabari Primary.
18 Numbar Ali Bepari, Gochabari Primary.
19 Abdul Baki Bepari, Gochabari Primary.
20 Abdul Haq Talukdar, Chandpur Arfia Maktab.
21 Md. Salimuddin, Kumidpur Maktab.
22 Abul Kasem Sarkar (E), Shibpur Maktab.
23 Md. Easin Ali, Jhira Burailpara Maktab.
24 Masum Ali Mandal (E), Baura Kanchibari Maktab.
25 Md. Fazlar Rahman, Tengorjani Maktab.
26 Md. Basiruddin Mandal, Tengorjani Maktab.
27 Basanta Kumar Das (E), Char Berahim Primary.
28 Krishna Chandra Bairagi, Hurabhayakhan Primary.
29 Gonesh Chandra Das, Sicha Board Primary.
30 Jogesh Chandra Das, Pearapur Free Primary.
31 Kamini Kumar Barma, Shakhoil Board Primary.
32 Dinesh Chandra Sarkar, Pogoil Board Primary.
33 Raj Kumar Das (E), Ramchandrapur Primary.
34 Bhola Nath Mohonta (E), Ramchandrapur Primary.
35 Nishi Kanta Sarkar, Kumidpur Maktab.
36 Ramesh Chandra Dutta (E), Hurabhanger Khan Primary.
37 Ganesh Chandra Sarkar, Raghobpur Primary No. II.
38 Bachha Mian Sarkar, Pogoil Board Primary.
39 Masratulla Fakir, Dharmapur Board Primary.
40 Ala Baksh Sheikh, Gumariganj Board Primary.
41 Nural Hossain, Gumariganj Board Primary.
42 Sabedali Mandal (E), Firusa Gobindapara Primary.
43 Abdur Rahim, Bhawanipur Bazarpara Board Primary.
45 Nasiruddin (E), Char Berahim Primary.
46 Abdul Khaleq, Baidya Nath Board Primary.
47 Azizar Rahman (E), Falia Free Primary.
48 Ayazuddin (E), Falia Free Primary.
49 Esaquddin , Senarai Maktab.
50 Shamsherali (E), Sarbananda Dhinaikura Maktab.
51 Jafaruddin (E), Sarbananda Dhinaikura Maktab.
52 Abdus Sobhan Akanda, Singjoin Maktab.
53 Azizul Hoque Prodhan, Singjoin Maktab.
54 Abu Bakar Mian, Fulbari Maktab.
55 Moslemuddin Molla, Fulbari Maktab.
56 Md. Amiruddin Sheikh, Fulbari Maktab.
57 Md. Abdul Kader, Kamarnai Maktab.
58 Abdul Jalil Ahmed, Dingapur Maktab.
59 Khedmatali Sarkar, Dingapur Maktab No. II.
60 Asiruddin Akanda, Chandpur Antra Maktab.
61 Kinaram Das, Raghobpur Primary No. II.
62 Durga Charan Barma, Bhawanipur Bazarpara Board Primary.
63 Jagadish Chandra Barman, Trinadhasi Board Primary.
64 Dharani Kanta Das (E), Falia Free Primary.
65 Kishori Mohan Das (E), Falia Free Primary.
66 Rajat Kanta Roy (E), Falia Free Primary.
67 Bhabesh Chandra Mohanta, Barisal Primary.
68 Rajendra Nath Das, Bhagabanpur Primary.
69 Harendra Nath Barma, Raghobpur Primary No. II.
70 Digendra Nath Das, Gotin Primary.
71 Nibaran Chandra Barman, Ullah Board Primary.

Kurigram Centre.

1 Shama Prosad Bhattacharjee, Senerkhamar Primary.
2 Chapala Sundari Debi, Senerkhamar Primary.
3 Sachindra Mohan Deb, Ramkhana Primary.
4 Lakshi Narayan Pal, Basuria Board Primary.
5 Prafulla Kumar Shil, Mogolbassa Primary.
6 Mazharuddin Sarkar, Modhupur Primary.
7 Akbar Ali (E), Dewanerkhamar Board Primary.
8 Md. Meherulla Shekh, Bozra Tobokpur Primary.
9 Yakubali Sarkar, Taebkhan Primary.
10 Md. Akbar Ali (E), Nagdaha Board Primary.
11 Md. Hasan Ali, Nagdaha Board Primary.
12 Habibar Rahman, Nagdaha Board Primary.
13 Md. Johurul Haq, Senerkhamar Primary.
14 Md. Azmerali Sheikh (E), Char Newashi Maktab.
15 Muhammadali, Buraburi Board Primary.
16 Samiruddin Mia, Mogolbassa Primary.
17 Md. Abdul Jabbar, Ulipur Board Primary.
18 Md. Syeder Rahman (E), Rowmari Board Primary.
19 Nur Muhammad Sarkar, Montala Board Primary.
20 Md. Noabuddin Shekh, Bozra Primary.
21 Md. Meser Ali, Chandhi Bozra Maktab.
22 Mohorulla Bepari, Gangla Board Primary.
23 Abdul Kader Khondker, Madarganj Maktab.
24 Md. Nasiat Ali, Nagrajpur Primary.
25 Abdul Jabbar, Baushmari Maktab.
26 Md. Ibrahim, Lalmonirhat Maktab.
27 Gasimuddin Shekh, Purbaramkhana Board Primary.
28 Saider Rahman Khondker, Basuria Board Primary.
29 Md. Tamizuddin Pramanik, Nakorganj Maktab.
30 Nagendra Nath Das (E), Gangla Board Primary.
31 Pisha Nath Das, Purbaramkhana Board Primary.
32 Tara Nath Barma, Atiabari Board Primary.
33 Bepin Chandra Das, Foolbari Primary.
34 Narendra Nath Sarkar, Bamnachora Board Primary.
35 Dinabandhu Brajabasi (E), Sonalukooti Primary.
36 Pratap Chandra Nath, Harishor Primary.
37 Akshoy Chandra Das, Kathalbari Primary No. II.
38 Khagendra Chandra Chakravarty, Dobariarbhita Primary.
39 Dharani Kanta Das, Kurigram Practising Primary.
40 Amal Chandra Datta (E), Gangla Board Primary.
41 Ramani Mohan Sil, Shilkhari Board Primary.
42 Nagendra Nath Nandi, Bhangamore Primary.
43 Rahimuddin Sarkar, Harnefra Primary.
44 Nohazuddin Sheikh, Matial Primary.
45 Md. Fakrul Islam Mandal, Mandalpara Maktab.
46 Fazarali Choudhury, Kanthalbari (I) Primary.
47 Majiruddin Sarkar (E), Sonalurkuti Primary.
48 Md. Tafailuddin Sarkar, Gaburhala Primary.
49 Sukur Mahmud, Khalilganj Primary.
50 Md. Deanatulla, Khalilganj Maktab.
51 Azizul Hoque, Senerkhamar Primary.
52 Majiruddin, Karpura Board Primary.
53 Hasemali Akanda, Baliamari Board Primary.
54 Md. Abdul Aziz Sheikh, Rajibpur Maktab.
55 Nawabali Sheikh, Jadurchar Maktab.
56 Md. Fazlur Rahman, Karpura Maktab.
57 Md. Abdul Hoque, Ulipur Board Primary.
58 Md. Abdul Jalil Sheikh (E), Rowmari Board Primary.
59 Md. Abdur Rashid Sheikh (E), Rowmari Board Primary.
60 Md. Rajabuddin Sheikh, Rowmari Board Primary.
61 Rahimuddin Sarkar, Hingli Primary.
62 Md. Abdus Sattar Mandal (E), Dhonar Char Primary.
63 Md. Tariqullah, Bazra Primary.
64 Md. Maniruddin, Kanthalbari Primary No. II.
65 Md. Asrafali Bepari, Chamdia Bozra Maktab.
66 Abdul Jabbar, Gangla Board Primary.
67 Mosammat Kabirunnessa, Pateswari Maktab.
68 Daneshali Akanda, Dhaurarkuti Primary.
69 Abdus Samad Mian, Ramsingh Primary.
70 Husainali Mian, Ramsingh Primary.
71 Azharuddin, Ghatiasar Maktab.
72 Noor Mahammad, Gatiasar Maktab.
73 Abdul Jabbar, Gatiasar Maktab.
74 Maizuddin (E), Chowddagharichar Maktab.

75 Biraj Mohan Rai, Shibkhuri Board Primary.
76 Benode Behari Barma, Karnapur Board Primary.
77 Janaki Nath Bairagi, Pateswari Maktab.
78 Nagendra Nath Rai, Karnapur Board Primary.
79 Bhabendra Chandra Das (E), Kashipur Primary.
80 Dhajendra Nath Bakshi, Sonalukuthi Primary.

Nilphamari Centre.

1 Md. Sulaiman Khan (E), Lakshonpur Board Primary.
2 Boezuddin Ahmed (E), Bhorbheri Primary.
3 Muhammad Ali (E), Kochukata Board Primary.
4 Isamuddin, Nekbakta Primary.
5 Sakoruddin Ahmed (E), Kanthali Primary.
6 Sahabuddin Ahmed (E), Kanthali Primary.
7 Tayezuddin, Desibai Primary.
8 Md. Zainal Abedin, Natibchapra Maktab.
9 Md. Akbar Hossain, Kazirhat Maktab.
10 Md. Fazlur Rahman, Musarat Panialpukur Maktab.
11 Md. Abdul Karim, Tinpaibelpukur Maktab.
12 Gofurali Ahmed, Jamirbari Maktab.
13 Sarat Chandra Barma, Ramganj Primary.
14 Uma Kanta Ray, Subarnakhuli Primary.
15 Bidhu Bhusan Barman, Borodaha Primary.
16 Haralal Barman, Khalishapocha Primary.
17 Mohini Mohan Roy, Ambari Dakshinpara Primary.
18 Tejjoman Barman, Bamnia Uttarpara Maktab.
19 Tarak Nath Roy, Kakina Shoulmari Maktab.
20 Susil Chandra Dutta (E), Nitai Primary.
21 Md. Kefayetulla, Barabhita Primary.
22 Asiruddin Ahmed, Soyragondha Board Primary.
23 Md. Asrafuddin Sarkar, Bagdokra Board Primary.
24 Jubbar Ali, Bafla Primary.
25 Hakimuddin Ahmed (E), Bherberi Primary.
26 Taslimuddin Ahmed (E), Bherberi Primary.
27 Md. Ismail Hossain (E), Kachukata Board Primary.
28 Md. Abdus Sobhan (E), Kachukata Board Primary.
29 Md. Azizur Rahman, Kachukata Board Primary.
30 Nasimuddin, Nitai Primary.
31 Md. Sobhanuddin, Chapra Primary.
32 Sakuddin Abdul, Bhabonchar Primary.
33 Md. Abdul Hossain, Khaturia Primary.
34 Afsaruddin Ahmed, Desibari Primary.
35 Asimuddin Ahmed (E), Jorabari Board Primary.
36 Md. Zahuruddin, Chapra Primary.
37 Badaruddin Ahmed (E), Darmani Maktab.
38 Md. Osman Ghani (E), Nilphamari Town Maktab.
39 Shamserali Shah Fakir (E), Kazerhat Maktab.
40 Sheikh Sadrul Hoque (E), Koya Maktab.
41 Md. Kandiluddin, Bajitpara Maktab.
42 Md. Bazaruddin (E), Shoulmari Basiria Maktab.
43 Md. Azizor Rahman, Salongram Islamia Maktab.
44 Md. Abdul Hossan (E), Khalisha Chapani (II) Maktab.
45 Md. Solaiman (E), Khalisha Chapani (II) Maktab.
46 Sahiruddin Ahmed, Khalisha Chapani (II) Maktab.
47 Neazuddin Ahmed (E), Khalisha Chapani (II) Maktab.
48 Nasiruddin Ahmed (E), Khalisha Chapani (II) Maktab.
49 Mosammat Sakina Khatoon (E), Kotkibari Maktab.
50 Md. Fakhruddin, Bamunia Ghonapara Maktab.
51 Jonabuddin Ahmed, Khutuamara Board Primary.
52 Dinesh Chandra Roy, Dighaldangi Primary.
53 Nityananda Roy, Kismet Dalua Primary.
54 Joy Kanta Barman, Khalisha Pocha Primary.
55 Benoy Bhusan Roy (E), Koyabari (I) Primary.
56 Jyotish Chandra Barman, Dalia Chapani Board Primary.
57 Indra Narayan Barman, Dalia Chapani Board Primary.
58 Balendra Nath Roy (E), Jote Nobinganj Primary.
59 Chandra Mohan Barman, Baispukuria Primary.
60 Jyotish Chandra Singha (E), Dimla Jhellapara Primary.
61 Padmalochan Roy, Kakina Shoulmari Maktab.
62 Sunit Kumar Ghose (E), Ramganj Primary.

District Pabna.

Pabna Centre.

1 Ranjit Kumar Saha (E), Rajpur Board Primary.
2 Nani Gopal Chakrabarty, Hakimpur Primary.
3 Anil Chandra Ghose (E), Baghulpur Primary.
4 Sachindra Nath Bhowmik (E), Baghulpur Primary.
5 Satyabrata Das Choudhury (E), Raisimul Primary.
6 Birendra Nath Sen, Malanchi Primary.
7 Gopal Chandra Moitra, Malanchi Primary.
8 Jitendra Nath Sen, Malanchi Primary.
9 Jyotish Chandra Saha (E), Gorory Primary.
10 Nani Gopal Sarkar (E), Gorory Primary.
11 Atulya Chandra Ghose, Chatmohar M. L. Primary.
12 Abdul Karim Khan, Pabna Practising Primary.
13 Abdul Hakim, Srikole Primary.
14 Abdul Jobber (E), Sen Dighulia Board Primary.
15 Md. Meherulla (E), Gopalpur Primary.
16 Md. Azhar Ali (E), Gopalpur Primary.
17 Md. Torab Ali Khondkar, Gayeshpur Primary.
18 Md. Mazharul Haque, Bheramara Primary.
19 Md. Nizamuddin, Garadaha Primary.
20 Md. Rahimuddin, Purankuthibari Primary.
21 Md. Aftabuddin, Nischintapur Primary.
22 Md. Sobdar Rahman (E), Malifa Maktab.
23 Md. Ayezuddin, Ekdanta Primary.
24 Md. Azizul Hoque, Boalmari Board Primary.
25 Md. Gholam Robbani, Saratganj Board Primary.
26 Md. Jahiruddin, Nazirpur Primary.
27 Md. Abdul Kader, Charpara Primary.
28 Md. Khabiruddin, Katenga Primary.
29 Md. Muizuddin, Paksey Primary.
30 Md. Azizuddin, Ruppur Maktab.
31 Abdul Kader (E), Kakra Maktab.
32 Md. Abdul Latif (E), Kakra Maktab.
33 Md. Idris (E), Shibpur Maktab.
34 Md. Azhar Ali, Shibpur Maktab.
35 Md. Moslemuddin, Shibpur Maktab.
36 Md. Gholam Hossain, Char Dulai Maktab.
37 Md. Abdul Jobbar, II, Char Dulai Maktab.
38 Md. Abdul Awal (E), Bherara Maktab.
39 Md. Abdul Latif, Bherara Maktab.
40 Md. Abdul Wahed, Pushpapara Maktab.
41 Md. Abdul Fatah, Ulat Chandipur Board Primary.
42 Nilratan Sarkar, Kuchlia Primary.
43 Debendra Nath Sarkar, Goalgram Primary.
44 Kalipada Das, Badal Primary.
45 Surendra Nath Sarkar (E), Kaidanga Primary.
46 Tarani Kanta Sarkar, Par Faridpur Primary.
47 Phanindra Nath Mondal, Khorda Chandpur Board Primary.
48 Hiranya Kumar Pal, Bhatsala Primary.
49 Nani Gopal Pal, Bhatsala Primary.
50 Khitish Chandra Pal, Bhatsala Primary.
51 Sudhir Kumar Sarkar, Ruppur Maktab.

Bera Centre.

1 Sishir Kumar De Das (E), Rangamatia Primary.
2 Akhil Kumar Chakraburty (E), Raj Narayanpur Board Primary.
3 Sarajit Kumar Saha (E), Raj Narayanpur Board Primary.
4 Manindra Nath Neogi (E), Raj Narayanpur Board Primary.
5 Chitta Ranjan Pal (E), Dighalkandi Maktab.
6 Amulya Charan Saha, Kaitola Primary.
7 Purna Chandra Saha, Nandanpur Primary.
8 Ratishchandra Karmakar (E), Khetupara Primary.
9 Manindra Nath Karmakar (E), Talat Primary.
10 Khorshed Ali (E), Karanja Primary.
11 Abedali (E), Karanja Primary.
12 Md. Sirajuddin (E), Dhalarchar Board Primary.
13 Syeduddin Shaikh (E), Solaboria Primary.
14 Abul Hossain, Par Gopalpur Primary.
15 Gholam Rashid Khan, Par Gopalpur Primary.
16 Moslemuddin, Chakla Board Primary.
17 Tazuddin Ahmed (E), Gopinathpur Board Primary.
18 Md. Aftabuddin (E), Haturia Jagannathpur Primary.
19 Md. Abdul Majid (E), Raj Narayanpur Board Primary.
20 Jafarali Khan (E), Char Durgapur Maktab.
21 Kazi Imanali (E), Char Durgapur Maktab.
22 Md. Abdulali (E), Dighalkandi Maktab.
23 Md. Sherali, Bangram Maktab.
24 Md. Korbanali (E), Bangram Maktab.
25 Md. Akram (E), Bangram Maktab.
26 Surendranath Pal, Baktarpur Primary.
27 Mahendra Lal Saha, Kaitola Primary.
28 Jamiruddin Ahmed (E), Dighalkandi Maktab.

Serajganj Centre.

1 Brajendra Kumar Das, Dhulbagra P. U. School.
2 Jagat Bandhu Bagchi (E), Bhutiapara Primary.
3 Lalan Chandra Pal, Haripur Primary.
4 Suresh Chandra Chakrabartty, Makimpur Primary.
5 Sudhansu Lal Pal, Jhowul Primary.
6 Dina Nath Goswami, Raidaulatpur Primary.
7 Santijiban Saha, Lakshmipur Primary.
8 Upendra Nath Das, Ful Kocha Primary.
9 Biswa Nath Saha, Kodla Primary.
10 Monoranjan Sarker, Bhuianganti Primary.
11 Amrita Lal Talukdar, Bhuianganti Primary.
12 Pran Govinda Sil, Bhuianganti Primary.
13 Kalipada Gun, Gudibary Primary.
14 Anadi Charan Shib, Gudibari Primary.
15 Narayan Chandra Saha, Jhikrabandar Primary.
16 Amarendra Nath Maitra, Suri Dhupilia Primary.
17 Ganesh Chandra Adhikary, Suri Dhupilia Primary.
18 Md. Sulaiman (E), Dhul Baora Primary.
19 Md. Manafuddin Khondker, Dhul Baora Primary.
20 Md. Abdul Hamid, Dhul Baora Primary.
21 Md. Belayet Hossain, Adachaki Primary.
22 Md. Jainuddin Khan, Adachaki Primary.
23 Md. Makbul Hossain Talukdar (E), Bahuli Primary.
24 Md. Tazammal Hosen, Hossainpur Primary.
25 Moksedali Sheikh, Hossainpur Primary.
26 Md. Jalaluddin, Hossainpur Primary.
27 Md. Hossain Ali, Adachaki Uttarpara Primary.
28 Md. Nizamuddin, Adachaki Uttarpara Primary.
29 Md. Jinnat Ali, Barakandi Primary.
30 Md. Serajul Hoque, Barakandi Primary.
31 Md. Kayemuddin, K. C. Bell Primary.
32 Md. Abul Kasem, K. C. Bell Primary.
33 Md. Naziruddin (E), Kechuahata Primary.
34 Md. Golam Mortujakhan (E), Kechuahata Primary.
35 Md. Kasimuddin, Ful Kocha Primary.
36 Md. Daliluddin Bhuian, Pangashi Primary.
37 Md. Jasimuddin, Kantanagar Primary.
38 Md. Nural Islam, Arkandi Primary.
39 Md. Nawab Ali (E), Arkandi Primary.
40 Md. Momtazali, Kustigachha Primary.
41 Md. Sultanuddin, Panchkroshi Primary.
42 Md. Asraf Ali, Betkandi Primary.
43 Masammat Jamila Khatun, Betkandi Primary.
44 Masammat Nuran Nesa, Betkandi Primary.
45 Md. Abbash Ali, Suri Dhupilia Primary.
46 Md. Lutfar Rahaman (E), Sonetala Primary.
47 Md. Delwar Hossain, Manirpur Primary.
48 Md. Gholam Moksed, Rahimpur Board Primary.
49 Md. Makbul Hossain, Banikandi Primary.
50 Md. Khoda Baksh, Banikandi Primary.
51 Md. Keramatali (E), Bhatta Majhira Primary.
52 Md. Harun, Chandidasganti Maktab.
53 Md. Kobedali Khan, Chandidasganti Maktab.
54 Md. Ijjatali, Char Kinerbar Maktab.
55 Md. Sekenderali, Char Kinerbar Maktab.
56 Md. Eskender Ali, Char Manikdiar Maktab.
57 Md. Aftabuddin, Char Manikdiar Maktab.
58 Md. Ali Reza, Char Nischintapur Board Primary.
59 Md. Ijjatulla, Char Nischintapur Board Primary.
60 Md. Ahmed Ali, Char Nischintapur Board Primary.
61 Md. Babar Ali, Dublia Maktab.
62 Md. Elahi Baksa Vennyabari Maktab.
63 Md. Sham Sozzoha, Subgachha Maktab.
64 Md. Serajuddin, Mandalpara Tekani Maktab.
65 Md. Afazuddin (E), Char Burungi Board Primary.
66 Md. Abdul Majid (E), Char Burungi Board Primary.
67 Masammat Amenakhatun, Char Burungi Board Primary.
68 Md. Kafiluddin, Bahuka Board Primary.
69 Md. Nural Hossain (E), Betil Maktab.
70 Md. Sahar Ali (E), Betil Maktab.
71 Md. Khorsed Ali Ahmed (E), Bongram Maktab.
72 Md. Nawab Ali, Chaluhara Maktab.
73 Musharaff Hossain, Khas Char Nawkair Primary.
74 Masammat Rabia Khatoon, Ramkantapur Maktab.
75 Md. Delwar Hossain, Hat Delua Maktab
76 Masammat Esatan Nesa, Chanbila Maktab.
77 Md. Ebrahim Hossain, Amdanga Maktab.
78 Md. Abdus Sobhan, Panchila Maktab.
79 Md. Abu Bakar, Chak Alokdiar Maktab.
80 Md. Faizuddin Talukdar, Bagaha Maktab.
81 Osman Gani Sheikh, Paiksha Maktab.
82 Benode Behari Sarker, Adachaki Uttarpara Primary.
83 Tarapada Sarkar, Kansona Primary.
84 Dinesh Chandra Malo, Hossainpur Primary.
85 Gaur Hari Das, Ghurka Primary.
86 Purna Chandra Basak, Ekdala Primary.
87 Jyotish Chandra Pal, Adachaki Primary.
88 Md. Abdur Rahman, Fulkucha Boys' Primary.
89 Md. Altaf Husain, Gayhatta Primary.
90 Md. Shamsul Haque (E), Kundail Primary.
91 Moazzem Ali, Char Raipur Maktab.
92 Syedullah (E), Barupur Maktab.
93 Md. Meherullah, Char Kinirber Boys' Maktab.
94 Md. Sohrab Ali, Madarpara Boys' Maktab.
95 Md. Mazibal Haque (E), Ahsannagar Boys' Maktab.
96 Md. Syedullah, Subgachha Boys' Maktab.
97 Mosammat Maziranessa, Char Burungi Board Primary Maktab.

K. AHMED, *Inspector of Schools.*

Orders by the Vice-Chancellor and Syndicate of the Calcutta University.

Senate House, the 10th January 1935.

1. The undermentioned candidates are declared to have passed the Preliminary Scientific M. B. Examination under the New Regulations held in November 1934 :—

(In alphabetical order.)

Carmichael Medical College, Belgachia.

Bandyopadhyay, Dwijendralal.
,, Sukumar.

Medical College, Calcutta.

Basu, Sachindranath.

Carmichael Medical College, Belgachia.

Das, Tikendrajit.
Dasgupta, Amareschandra.
De, Kartikcharan.

Medical College, Calcutta.

DeSouza, Richard.

Carmichael Medical College, Belgachia.

Gangopadhyay, Haradhan.
,, Susilkumar.
Ghosh, Radharaman.
,, Ranajitkumar.
,, Sailendrabhushan.
,, Usharanjan.

Medical College, Calcutta.

Ghoshal, Dharanikanta.
Guhabiswas, Sudhindrakumar.

Carmichael Medical College, Belgachia.

Gupta, Niharranjan.

Medical College, Calcutta.

Maitra, Amarnath.

Carmichael Medical College, Belgachia.

Majumdar, Dilipkumar.
Mallik, Ganeschandra.
Mukhopadhyay, Hemendranath.
Nandi, Bishnupada.

Medical College, Calcutta.

Pal, Bishnupada.

Carmichael Medical College, Belgachia.

Pragjee Ramjee Solanki.
Ray, Amarendrakrishna.

Medical College, Calcutta.

Ray, Debaprasad.

Carmichael Medical College, Belgachia.

Ray, Phatikchand.
,, Sudhansusekhar.
,, Sunilkumar.

Medical College, Calcutta.

Raychaudhuri, Anilkumar.
,, Arunkumar.

Carmichael Medical College, Belgachia.

Raychaudhuri, Parimalkanti.
Sanyal, Atindrakumar.
Sarkar, Nirmalkumar.

Medical College, Calcutta.

Sen, Sisiransubhushan.

Carmichael Medical College, Belgachia.

Sengupta, Nirmalchandra.

Medical College, Calcutta.

Sinha, Bhupendranarayan.

Carmichael Medical College, Belgachia.

Sinha, Hariprasad.

Medical College, Calcutta.

Zahoorul Hassain Khan.

II. The undermentioned candidates are declared to have passed the First M. B. Examination under the New Regulations held in November 1934 :—

(In alphabetical order.)

Medical College, Calcutta.

Abdul Ahad.
Abdul Hafiz Talukder.
Abdur Rouf.

Carmichael Medical College, Belgachia.

Bandyopadhyay, Bholanath.
,, Gadadharkrishna.
,, Parimalchandra.
,, Sudhansusekhar.

Medical College, Calcutta.

Basu, Dwijendrakrishna.
Bhattacharyya, Saileschandra.
Bhuiya, Gangacharan.
Biswas, Radhabinod.

Carmichael Medical College, Belgachia.

Chakrabarti, Dharmadas.

Medical College, Calcutta.

Chattopadhyay, Karalicharan.

Carmichael Medical College, Belgachia.

Chattopadhyay, Kshirodnath.

Medical College, Calcutta.

Chaudhuri, Manindrabhushan.
Dandapath, Jibankrishna.
Das, Mohanlal.

Carmichael Medical College, Belgachia.

Dasgupta, Gobindalal.

Medical College, Calcutta.

Deb, Sudhir.

Carmichael Medical College, Belgachia.

Ghosh, Ajitkumar.

Medical College, Calcutta.

Ghosh, Sailendrakumar.
,, Santikumar.

Carmichael Medical College, Belgachia.

Goswami, Prankumar.

Medical College, Calcutta.

Kar, Nimaichandra.

Carmichael Medical College, Belgachia.

Khan, Purnendunarayan.

Medical College, Calcutta.

Lala, Sudhansubimal.
Majumdar, Nanigopal.

Carmichael Medical College, Belgachia.

Mandal, Bishnupada.

Medical College, Calcutta.

Md. Abdus Sobhan.
Mukhopadhyay, Amiyabilas.

Carmichael Medical College, Belgachia.

Mukhopadhyay, Lakshmanmohan.

Medical College, Calcutta.

Mukhopadhyay, Tarapada.
Pinaky Prashad Sharma

Carmichael Medical College, Belgachia.

Ray, Praphullachandra.

Medical College, Calcutta.

Raychaudhuri, Phanindranath.

Carmichael Medical College, Belgachia.

Saha, Bholanath.
„ Syampada.
Sanyal, Sambhucharan.
Sarkar, Niranjankumar.

Medical College, Calcutta.

Sen, Amalkumar.

Carmichael Medical College, Belgachia.

Sen, Bimalchandra.

Medical College, Calcutta.

Taiab Hossain Basunia.

III. The undermentioned candidates are declared to have passed the Second M.B. Examination under the New Regulations held in November 1934:—

(In alphabetical order.)

Medical College, Calcutta.

Abdul Latiff.

Carmichael Medical College, Belgachia.

Bandyopadhyay, Haridas.
„ Prithwischandra.

Medical College, Calcutta.

Bandyopadhyay, Sarojkumar.
„ Satyendrachandra.
Basak, Sureschandra.

Carmichael Medical College, Belgachia.

Bhattacharyya, Bhabaniprasad.
Bhaumik, Susilkumar.
Brahma, Purnendusekhar.
Chaudhuri, Munindrakrishna.
Das, Mahimaranjan.

(Non-collegiate student) Medical College, Calcutta.

Das, Manomohan.

Carmichael Medical College, Belgachia.

Das, Sailendranath.

Medical College, Calcutta.

Daspurkayasthat Nirmalkanti.
Datta, Anupkumar.
„ Chittaranjan.

Carmichael Medical College, Belgachia.

Debdas, Nanigopal.

Medical College, Calcutta.

Gangopadhyay, Praphullachandra.

Carmichael Medical College, Belgachia.

Ghosh, Dwijendranath.

Medical College, Calcutta.

Ghosh, Lalitmohan.
„ Parbaticharan.

Carmichael Medical College, Belgachia.

Marik, Anangamohan.

Medical College, Calcutta.

Md. Lutfur Rohman.

Carmichael Medical College, Belgachia.

Mukhopadhyay, Birendranarayan.
„ Nripendrakumar.
„ Sagarchandra.
„ Satyendraprasad.
„ Sisirkumar.
„ Subodhchandra.
„ Taranath.
Nandi, Manmathanath.
Pain, Bindumadhab.
Pal, Pulinkrishna.
Pattanayak, Birendranath.

Medical College, Calcutta.

Obadiah, Rachel.
Rakshit, Sailendranath.

Carmichael Medical College, Belgachia.

Rakshit, Santoshkumar.
Ray, Amalkumar.
„ Chittaranjan.
„ Kiranchandra.

(Non-collegiate student) Medical College, Calcutta.

Ray, Niradkisor.

Carmichael Medical College, Belgachia.

Ray, Sibkrishna.
Raychaudhuri, Mohinimohan.
Saha, Jaladhar.
„ Hemchandra.
Sen, Subhrendukumar.
Sengupta, Amarendranath.
„ Premtosh.

Medical College, Calcutta.

Shree Narayan Vajpayee.

Carmichael Medical College, Belgachia.

Sinha, Prabhatchandra.

IV. The undermentioned candidates are declared to have passed the Third M. B. Examination under the New Regulations held in November, 1934.

(In alphabetical order.)

Medical College, Calcutta.

Abul Kasem Md. Hafizer Rahman.

Carmichael Medical College, Belgachia.

Baksi, Jitendranath.
Bandyopadhyay, Panchkari.
" Sachchidananda.
Basu, Kalipada.

Medical College, Calcutta.

Basu, Manimohan.
" Saratkumar.
Bhattacharyya, Nibaranchandra.

Carmichael Medical College, Belgachia.

Biswas, Amiyaranjan.

Medical College, Calcutta.

10 Biswas, Bipinbihari.
Chattopadhyay, Chandicharan.

Carmichael Medical College, Belgachia.

Das, Debkumar.
" Sailendranath.
Dasgupta, Jagadischandra.
Datta, Abanibhushan.
" Dwijendranath.
" Pratibharanjan.
De, Pradyotkumar.

Medical College, Calcutta.

Dhara, Murarimohan.

Carmichael Medical College, Belgachia.

20 Gangopadhyay, Purnendu.
Ghosh, Bimalananda.
" Himansubhushan.
" Manindranath.
" Subrata.

Medical College, Calcutta.

Guhathakurta, Upendranath.

Carmichael Medical College, Belgachia.

Gupta, Amarprasad.

Medical College, Calcutta.

Gupta, Bimalacharan.

Carmichael Medical College, Belgachia.

Gupta, Sudhansukumar.
Haradayal Agarwala.

Medical College, Calcutta.

30 Jagadish Sharma.
Jethmal Bhansali.
Majumdar, Indubhushan.
Md. Atabuddin.
Md. Jashmotuddin Sarkar.
Mitra, Barindranath.

Carmichael Medical College, Belgachia.

Mukhopadhyay, Amarnath.

Medical College, Calcutta.

Mukhopadhyay, Hiralal.
" Nabakumar.
" Rabindranath.

Carmichael Medical College, Belgachia.

40 Mukhopadhyay, Susilkumar.

Medical College, Calcutta.

Nag, Arabindabihari.

Carmichal Medical College, Belgachia.

Nandi, Prabhatchandra.

Medical College, Calcutta.

Pal, Debendranath.
" Manilal.
Ray, Gaganchand.
" Sachindrachandra.

Carmichael Medical College, Belgachia.

Ray, Sibdas.
Raychaudhuri, Amarendranath.
" Parames.

Medical College, Calcutta.

50 Saha, Loknath.

Carmichael Medical College, Belgachia.

Samanta, Sitalchandra.
Sen, Anadinath.
" Samarendra.
Sengupta, Indubhushan.

Medical College, Calcutta.

Shaikh Tamizuddin Ahmad.
Shamsuddin Ahmed.
Sheikh Alemuddin.
Sk. Md. Mobarok Hossain.
Sultan Ahmed Chowdhury.
60 Syed Habiber Rahman.

N. SEN,

Controller of Examinations.

Registered No. C207

The Calcutta Gazette

THURSDAY, JANUARY 10, 1935.

PART II

Advertisements.

Notices.

Advertisements, Notices, etc., intended for insertion in this part of the Gazette cannot be received after noon on Saturday. All manuscripts and postal remittances must be addressed to Superintendent, Government Printing, Bengal Government Press, Alipore. For the convenience, however, of parties or firms located in Calcutta cash payments of Advertisement charges may be made at Publication Sales Office, Room No. 2, Ground Floor, Writers' Buildings, Calcutta.

Land Sale Notices.

Notification B.

NOTICE is hereby given, under sections 5 and 13 of Act XI of 1859, that unless the arrears (which were due on or before 31st Bhadra, 1341 B. S., of which the latest date of payment was on the 28th day of September 1934, and which will be due on or before 30th Agrahayan, 1341 B. S., of which the latest date of payment will be on the 12th day of January 1935) mentioned below are paid on or before the next latest date of payment, viz., the 12th January 1935, the undermentioned estates or shares of estates in the district of Khulna will be put up for sale at the office of the Collector of that district on the 26th March 1935, at 12 noon, for the said arrears.

Tauzi No.	Name of mahal and pargana.	Sadar jama of whole estate.	Whether the whole estate is to be sold.	If only a share is to be sold, specification of such share or shares.	Names of proprietors of property to be sold.	If only a share is to be sold, the sadar jama of such share.	If the whole estate is to be sold, the arrears due from it.	If only a share is to be sold, the arrears due from it.
1	2	3	4	5	6	7	8	9
		Rs. a. p.				Rs. a. p.	Rs. a. p.	Rs. a. p.
1008	Lot No. 240 north portion, pargana Sundarbans.	3,932 0 0	Whole	....	Kamal Kamini Devi and others.	..	1,378 0 0	..
1009	Lot No. 240 middle portion, pargana Sundarbans.	3,681 0 0	Do.	....	Ditto ..	..	1,323 8 0	..
1010	Lot No. 240 south portion, pargana Sundarbans.	3,181 0 0	Do.	....	C. K. Nag and others	..	232 4 3	..

Khulna, the 21st December 1934.

S. BHATTACHARJI, *for* Collector.

Notification.

NOTICE is hereby given, under sections 6 and 13 of Act XI of 1859, that the undermentioned estates and shares of estates in the district of Birbhum will be put up for sale at the office of the Collector of this district on the 10th January 1935, at 12 noon, for arrears of revenue and other demands which by law are realizable as arrears of land revenue.

When in columns 5, 7 and 9 of the following statement it is stated that only a share is to be sold it is to be understood that a separate account is kept for that share :—

Tauzi No.	Name of mahal and pargana.	Sadar jama of whole estate.	Whether the whole estate is to be sold.	If only a share is to be sold, specification of such share or shares.	Names of proprietors of property to be sold.	If only a share is to be sold, the sadar jama of such share.	If the whole estate is to be sold, the arrears due from it.	If only a share is to be sold, the arrears due from it.
1	2	3	4	5	6	7	8	9
		Rs. a. p.				Rs. a. p.	Rs. a. p.	Rs. a. p.
4	Senbhum, pargana Senbhum.	41,132 10 0	..	16 annas share of mauza Binuria, 8 annas share of mauzas Choumondalpur, Hansra, Chhatarbandi and Khiral, in separate account No. 1.	Sudhakar Mazumdar and others.	849 0 8	..	16 12 6
4	Ditto ..	41,132 10 0	..	4 gds. 1 kara 2 krantis 6 tils share of mauzas Kankhutia and Raipur, 4 gds. 1 kara 2 krantis 5 tils share of mauza Choupahari Jungle, 4 gds. 1 kara 2 krantis 7 tils share of mauzas Choupahari Jungle, Radhanagar, Dakhin Radhanagar, Chandanpur and Mahidipur, 13 gds. 1 kara 1 kranti share of mauzas Adityapur, Bolepur and Bandhgara, 8 annas share of mauzas Faridpur, Chakpali, Bhoodepur, Dakhin Hariramnpur and Nachansa, 9 as. 6 gds. 2 karas 2 krantis share of mauzas Gidgram, 4 annas share of mauzas Nurpur, Bahadurpur, Rajatpur, Ghirnapara, Mouli, Narayanpur, Jadupur, Ranganja, Bandhgara and Chandipur, 1 gd. 3 karas 2 krantis 8 tils share of mauzas Muluk, Araji Muluk and Gobindapur, in separate account No. 11.	Saila Bala Debi ..	1,737 5 6	..	108 9 3
4	Ditto ..	41,132 10 0	..	16 annas share of mauzas Murandihi, Chunpalashi, Saldanga, Dalla, Ruppur, Ramnagar and Basuda, in separate account No. 18.	Rajani A. Kanta Biswas.	2,680 13 6	..	132 13 6
4	Ditto ..	41,132 10 0	..	1 a. 15 gds. 2 karas 16 tils share of mauzas Kankhutia and Raipur, 1 a. 15 gds. 2 karas 14 tils share of mauzas Choupahari Jungle, Radhanagar, Dakhin Radhanagar, Chandanpur and Mahidipur, 8 annas share of mauzas Choumondalpur, Hansra, Chhatarbandi and Khiral, 5 as. 2 gds. 2 karas share of mauzas Hariharpur *alias* Mukunda, 16 annas share of mauzas Mahidipur, Kankhutia, Nurpur, Goltikuri, Shibpur, Narayanpur and Matikona, in separate account No. 20. All other shares than that specified will be excluded from the sale.	Kedar Nath Ghose and others.	1,882 4 4	..	50 4 10
10	Dheka, pargana Swarupsing.	16,707 4 0	Whole estate, 16 annas share.	..	Mahanta Srivat Banawari Mukunda Das Nandi Dalal.	..	999 0 0	

Tauzi No.	Name of mahal and pargana.	Sadar jama of whole estate.	Whether the whole estate is to be sold	If only a share is to be sold, specification of such share or shares.	Names of proprietors of property to be sold.	If only a share is to be sold, the sadar jama of such share.	If the whole estate is to be sold, the arrears due from it.	If only a share is to be sold, the arrears due from it.
1	2	3	4	5	6	7	8	9
		Rs. a. p.				Rs. a. p.	Rs. a. p.	Rs. a. p.
14	Bhurkunda, pargana Bhurkunda.	15,142 9 0	..	2 as. 13 gds. 1 kara 1 kranti share in separate account No. 1. All other shares than that specified will be excluded from the sale.	Birendra Nath Mustafi and others	2,523 11 6	..	75 10 3
22	Saintia, pargana Mourswarsabek.	15,151 5 0	..	2 annas share in residuary excepting separate account Nos. 1 to 14.	Hari Charan Ghose and others.	1,893 0 8	..	36 13 1
22	Ditto ..	15,151 5 0	..	13 gds. 1 kara 1 kranti share in separate account No. 14. All other shares than that specified will be excluded from the sale.	Prosad Ch. Ghose	631 5 0	..	37 4 8
25	Indus, pargana Kutubpur.	5,687 2 8	..	8 annas share in separate account No. 1. All other shares than that specified will be excluded from the sale.	Kalidas Das for self and sebait.	2,843 9 5	..	155 3 3
31	Purandarpur, pargana Purandarpur.	6,299 6 0	..	2 as. 10 gds. share in separate account No. 1.	Kumar Brahma Nr. Chakrabarty.	984 4 5	..	58 10 0
				2 annas share in separate account No. 3.	Ram Ranjan Hati and others.	787 7 10	..	46 13 1
				2 as. 10 gds. share in separate account No. 6. All other shares than that specified will be excluded from the sale.	Ram Ranjan Mukherjee.	984 4 5	..	58 7 11
66	Murundi, pargana Kutubpur	1,531 15 0	..	5 as. 6 gds 2 karas 2 krantis share in residuary excepting separate account Nos. 1 and 2.	Suprobhat Chandra and others.	510 10 4	..	71 5 4
66	Ditto ..	1,531 15 0	..	5 as. 6 gds. 2 karas 2 krantis share in separate account No. 1.	Dharma Das Chandra and others.	510 10 4	..	71 5 4
				5 as. 6 gds 2 karas 2 krantis share in separate account No. 2.	Dhanapati Chandra and others.	510 10 4	..	71 5 4
84	Mandari, pargana Khargram.	719 5 0	Whole estate, 16 annas share.	....	Golam Gous and others, Motouli.	..	10 0 0	..
94	Gokulata, pargana Gokulata.	3,250 14 0	..	3 as. 15 gds. 2 karas 13 tils share in separate account No. 4. All other shares than that specified will be excluded from the sale.	Dwijendra Kumar Roy and others.	767 9 1	..	66 13 11
100	Srichandrapur, pargana Akbarshahi.	1,689 10 0	..	7 as 3 gds 1 kara 7 tils share in residuary excepting separate account Nos. 1 to 3 and 5 to 7. All other shares than that specified will be excluded from the sale.	Sourindra Bhusan Roy and others.	156 4 11	..	67 3 2
111	Rasowan, pargana Barra.	4,173 14 1	..	5 as. 19 gds 3 karas 1 kranti 5 tils share in residuary excepting separate account Nos 1 to 6 and 8 to 11.	Sasthi Kinkar Banerjee and others.	1,562 14 2	..	14 8 0
111	Ditto ..	4,173 14 1	..	2 as. 5 gds. share in separate account No. 1.	Tara Sankar Banerjee and others.	588 1 1	..	8 15 0
111	Ditto ..	4,173 14 1	..	2 annas share in separate account No. 6. All other shares than that specified will be excluded from the sale.	Tara Prosanna Mukherjee and others.	521 12 7	..	8 9 0

Tauzi No.	Name of mahal and pargana.	Sadar jama of whole estate.	Whether the whole estate is to be sold.	If only a share is to be sold, specification of such share or shares.	Names of proprietors of property to be sold.	If only a share is to be sold, the sadar jama of such share.	If the whole estate is to be sold, the arrears due from it.	If only a share is to be sold, the arrears due from it.
1	2	3	4	5	6	7	8	9
		Rs. a. p.				Rs. a. p.	Rs. a. p.	Rs. a. p.
114	Bongram, pargana Barbaksing	2,526 4 0	..	3 as. 4 gds. share in residuary excepting separate account Nos. 1 to 10. All other shares than that specified will be excluded from the sale.	Provash Chandra Mitra.	505 3 11	..	29 9 10
125	Kanutia, pargana Swarupsing.	1,640 6 0	Whole estate, 16 annas share.	....	Gobinda Chandra Mazumdar and others.	..	94 0 0	..
143	Shyamsundarpur, pargana Barbaksing	2,113 13 0	..	4 as. 6 gds. 1 kara share in residuary excepting separate account Nos 1 and 2. All other shares than that specified will be excluded from the sale.	Binay Krishna Choudhuri and others.	569 11 9	..	18 1 5
158	Kalipur, pargana Kutubpur.	851 4 0	Whole estate, 16 annas share.	....	Srish Chandra Chaudhuri and others, sebaits.	..	52 0 0	..
172	Majhigram, pargana Khatanga.	3,422 4 0	..	12 annas share in residuary excepting separate account No. 1.	Munshi Golam Gous and others.	2,566 11 0	..	108 0 0
				4 annas share in separate account No. 1.	Shyamapada Roy and others.	855 9 0	..	36 0 0
173	Rangtara, pargana Swarupsing.	996 8 0	..	13 as. 16 gds. 2 karas 2 krantis share in residuary excepting separate account No. 2. All other shares than that specified will be excluded from the sale.	Ashu Tosh Ghosal and others.	775 1 7	..	41 0 7
230	Nimtikuri, pargana Haripur.	602 10 0	Whole estate, 16 annas share.	....	Mahesh Chandra Dutta and others.	..	7 12 1	..
240	Damdama, pargana Alinagar.	1,482 11 0	..	6 as. 5 gds share of mauzas Abadanga, Damdama, Nijuri, Maligram, Hatora, Kenduajulai, Pupaldihi, Sangra, Tentuldihi, Patharghata, Layekpur and Tripuraripur, in separate account No. 1. All other shares than that specified will be excluded from the sale.	Shyamapada Roy and others.	579 2 10	..	32 13 0
250	Ganutia, pargana Ichhapakhuria.	3,732 9 0	Whole estate, 16 annas share.	....	Minor Niroj Kumar Ghose and others.	..	1,090 0 0	..
580	Sahapur, pargana Swarupsing.	1,967 11 0	Do. ..	....	Rajendra Nath Pal and others.	..	120 0 0	..
661	Borla, pargana Sahajadpur.	504 8 3	Do. ..	....	Purnendu Narayan Roy Deb Barman and others.	..	93 14 0	..
666	Sanskar Bhadrapur, pargana Dhawa.	7,477 3 11	..	11 annas share of mauzas Karamji, Pachhim Gopalpur, Radhagobindapur, Kanior, Bhabanipur, Kanaipur, Mathkalitha, Kalitha, Barala, Atgram, Mukrampur, Radipur, Bhadrapur, Purba Gopalpur, Akalipur, Purba Lakhinarayanpur, Gosainpur, Jestha Bhabanipur, Bara, Ranha, Sarbashidanga, Simlandi, Hajarpur, Bamdhkhula Sitalgram, Raipur, Araji Madhupur, Protappur Sanskar, Sungai and Gopinathpur in residuary excepting separate account Nos. 1 and 2. All other shares than that specified will be excluded from the sale.	Kumar Debendra Nath Roy.	5,140 8 8	..	525 0 10

Tauzi No.	Name of mahal and pargana.	Sadar jama of whole estate.	Whether the whole estate is to be sold.	If only a share is to be sold, specification of such share or shares.	Names of proprietors of property to be sold.	If only a share is to be sold, the sadar jama of such share.	If the whole estate is to be sold, the arrears due from it.	If only a share is to be sold, the arrears due from it.
1	2	3	4	5	6	7	8	9
		Rs. a. p.				Rs. a. p.	Rs. a. p.	Rs. a. p.
926	Simgram, pargana Nowanagar.	524 14 0	Whole estate, 16 annas share.	....	Mirja Lutfa Ali and others.	..	122 0 9	..
938	Majkuri, pargana Majkuri.	569 10 10	Do. ..	....	Tarapada Roy and others.	..	24 9 4	..
1003	Raghunathpur, pargana Sahajadpur.	717 4 2	Do. ..	....	Sabaran Nessa Bibi and others.	..	123 11 9	..
1221	Taraf Belhatti, pargana Barbaksing.	2,218 0 7	Do. ..	....	Dwarka Nath Telang and others General Secretary.	..	494 10 11	..
1270	Taraf Mitrapur, Dihinangar, pargana Nowanagar.	1,804 3 8	Do. ..	....	Sital Chandra Choudhuri and others.	..	220 12 10	..

These estates are being advertised for sale for instalments of revenue due on or before the 31st Bhadra, 1341 B.S., of which the latest date of payment was 28th September 1934.

Suri, the 21st December 1934.

[ILLEGIBLE], *for* Collector.

In the Court of the Sub-Judge at Asansol.

Section 19 of the Provincial Insolvency Act.

INSOLVENCY CASE No. 49 OF 1934.

Petitioner Raman Maji.

TAKE notice that the petition for insolvency filed by the aforesaid petitioner has been admitted and that the Court has fixed 11th January 1935 as the date for the hearing thereof.

K. BANERJEE, Sub-Judge.

Asansol, the 18th December 1934. (61—1)

NOTICE TO CREDITORS OF APPLICATION FOR DISCHARGE.

Section 41 (*1*) of the Provincial Insolvency Act, V of 1920.

In the Court of the District Judge at Dacca.

INSOLVENCY CASE No. 14 OF 1932.

Upendra Nath Ghosh, son of late Uma Kanta Ghosh, of Changari, police-station Tangibari, district Dacca, insolvent.

TAKE notice that the abovenamed insolvent has applied at the Court for his discharge, and that the Court has fixed the 16th day of January 1935, at 10 o'clock, for hearing the application.

Dated this 20th day of December 1934.

A. N. SEN, District Judge.

(54—1)

In the Court of the District Judge of Jalpaiguri.

INSOLVENCY CASE No. 5 OF 1934.

Asher Mohammed, petitioner.

ASHER MOHAMMED, son of late Nadia Mohammed, of Paharpur police-station and district Jalpaiguri, who was adjudged insolvent on 30th April 1934, has applied to this Court for final discharge. The Court has fixed the 11th day of January 1935 for hearing of the application at Jalpaiguri.

[ILLEGIBLE], *for* District Judge.

Dinajpur, the 21st December 1934. (47—1)

In the Court of the District Judge of Mymensingh.

INSOLVENCY CASE No. 52 OF 1934.

Narendra Chandra Mazumder and others, creditors, petitioners,

versus

Jadunath Goswami, debtor, opposite party.

ON the application of Narendra Chandra Mazumder and others, creditors, against their debtor Jadunath Goswami, son of late Kunja Nath Goswami, residing at Chandura, police-station Nandail, district Mymensingh, for adjudicating the said debtor an insolvent, notice is hereby given to all his creditors that the said petition has been admitted by this Court and that the 19th day of January 1935 has been fixed for hearing the case.

H. G. S. BIVAR, District Judge.

Mymensingh, the 11th December 1934. (2846—1)

In the Court of the District Judge of Rangpur.

INSOLVENCY CASE No. 34 OF 1934.

ON the application of the debtor Masimuddin Kaviraj, son of late Khotabuddin Gasna, of Krishnapur, police-station Mithapukur, in Rangpur, for being adjudged an insolvent, the 12th day of January 1935 has been fixed for hearing the aforesaid petition and the examination of the debtor.

S. C. DE, *for* District Judge.

Rangpur, the 22nd December 1934. (57—1)

In the Court of the District Judge of Tippera.

INSOLVENCY CASE No. 9 OF 1934.

NOTICE is hereby given to the creditors of Rajani Kanta Namasudra, son of late Sarup Chandra Changa, of Manipur, pargana Nurnagar, police-station Nabinagar, district Tippera, that he has filed an application in this Court for adjudging him insolvent and that 17th January 1935 has been fixed for hearing of the said application.

S. N. GUHA ROY, District Judge.

Comilla, the 22nd December 1934. (72—1)

NOTICE TO CREDITORS OF APPLICATION FOR DISCHARGE.

Section 41 (*1*) of the Provincial Insolvency Act, V of 1920.

In the Court of the District Judge at Alipore.

INSOLVENCY CASE No. 7 OF 1934.

Bethlem Thadeus Sookias of 240A, Lower Circular Road, Calcutta, applicant.

TAKE notice that the abovenamed insolvent has applied at the Court for his discharge, and that the Court has fixed the 14th day of January 1935, at 11 o'clock, for hearing the application.

Dated this 19th day of December 1934.

T. H. ELLIS, District Judge.

(2877—1)

APPLICATIONS are invited for the post of Head Clerk in the office of the Inspector of European Schools, Bengal, on the revised scale of pay at Rs. 110—15/2—200. The vacancy is open to clerks in the Inspectorate and in Government Colleges. Candidates must possess experience of work in a Government office, preferably in the Education Department with capacity for management of an office. Applications with copies of testimonials must reach the undersigned by the 15th January 1935.

R. WOLFENDEN,

Inspector of European Schools, Bengal.

40/1/A, Free School Street, Calcutta, the 19th December 1934.

WANTED a District Engineer for the District Board of Rajshahi on Rs. 400—20—650. Candidates must be qualified as per Bengal Government notifications No. 1781 L.S.-G., dated 12th December 1912, and No. 809, dated 18th February 1922.

Candidates should apply in sealed and registered covers addressed to Chairman, District Board, Rajshahi, and superscribed "Application for appointment of District Engineer" accompanied by all the necessary certificates in original and testimonials required by the rules together with a suitable envelope addressed and sufficiently stamped for registration in which they can be returned in the event of the application being unsuccessful. Applicants must state their age, experience, native district and place of residence.

Applications will be received up to the 7th February 1935.

The selected candidate will be on probation for one year to be confirmed thereafter on approved service. He will not be allowed any travelling allowance for joining the post.

KUMAR P. N. ROY, Chairman, District Board.

Rajshahi, the 22nd December 1934. (73—8)

THE Bengal and Madras Service Family Pension Fund which is provisionally managed and assisted by Government has for its object the provision of monthly pensions for the maintenance of the widows and children of subscribers and is open, with certain exceptions, to all active and pensioned members of the Uncovenanted service of Government (except those serving under the Government of Bombay), and to Local Fund servants earning pensions from Government. Some of the special features of the fund are (1) that widowed daughters incapable of re-marriage or children labouring under such mental or bodily infirmities as incapacitate them from earning their livelihood or preclude the possibility of marriage (in case of a daughter) are admitted to its benefits; and (2) that subscribers to the Widows and Daughters' branches are entitled to a refund of 30 per cent. of the premia paid, should the nominee predecease them after five years of admission. The second quinquennial valuation of the Fund has been completed by the Actuary to the Government of India, and his report discloses very favourable results. For forms of application and rules of the Fund apply to the Account-ant-General, Bengal, Imperial Secretariat Buildings, Calcutta.

Irrigation Department, Bengal.

IN accordance with rule 26 of the Navigation Rules of Midnapore Canal, issued under section 11 of the Canals Act, 1864 (Bengal Act V of 1864), and published under Irrigation Department notification No. 5 of the 19th June 1917, notice is hereby given for general information that the entire lengths of Reaches I to VI of the Midnapore Canal from Mohanpur to Dainan and also the entire length of Distributary No. 1 from Kristo-nagar to Naraingarh will remain closed to traffic for two months from 16th February 1935 to 15th April 1935, both days inclusive, for the purpose of silt clearance and special repairs to locks.

S. C. MAJUMDAR, Superintending Engineer,
South-Western Circle (offg.).

Calcutta, the 2nd January 1935.

Currency note.

PORTION of the following currency note of the Calcutta Circle is stated to have been destroyed, and payment of its value has been claimed by the person whose name is placed against the number. Any other person claiming a right to it is warned to communicate at once with the undersigned :—

Register No.	Number of note.	Value. Rs.	Name of claimant.
WD 9 of 34/35.	S/78, 285743	100	Sital Mistri, C/o Upendra Nath Biswas, P. O. Hasimara, district Jalpaiguri.

K. K. CHETTUR, Currency Officer.

Currency Office, Calcutta, the 18th December 1934.

In the matter of the Provident Insurance Societies Act,

and

In the matter of the Milan Insurance Society.

NOTICE is hereby given that at an extraordinary general meeting held on the 23rd December 1934, the above-named Society has, by an extraordinary resolution, been put into voluntary liquidation and Sj. Charu Chandra Choudhury, c/o Sj. Rasamoy Choudhuri of Gangchar, Comilla, has been appointed the liquidator.

CHARU CHANDRA CHOUDHURY, Liquidator.

Comilla, the 28th December 1934. (78—1)

In the matter of the Provident Insurance Societies Act,

and

In the matter of the Milan Insurance Society.

NOTICE is hereby given that a meeting of the creditors of the above-named Society will be held on the 20th January 1935, at 4-30 p.m., at the house of Sj. Rasamoy Choudhuri, Gangchar, Comilla.

CHARU CHANDRA CHOUDHURY, Liquidator.

Comilla, the 28th December 1934. (79—1)

In the matter of the Provident Insurance Societies Act,

and

In the matter of the Tippera Lucky Insurance Society.

NOTICE is hereby given that at an extraordinary general meeting held on the 21st December 1934, the above-named Society has, by an extraordinary resolution, been put into voluntary liquidation and Sj. Rasamoy Choudhuri of Gangchar, Comilla, has been appointed the liquidator.

RASAMOY CHOUDHURI, Liquidator.

Comilla, the 28th December 1934. (80—1)

In the matter of the Provident Insurance Societies Act,

and

In the matter of the Tippera Lucky Insurance Society.

NOTICE is hereby given that a meeting of the creditors of the above-named Society will be held on the 19th January 1935, at 4-30 p.m., at the house of the liquidator, Gangchar, Comilla.

RASAMOY CHOUDHURI, Liquidator.

Comilla, the 28th December 1934. (81—1)

In the matter of the Provident Insurance Societies Act,

and

In the matter of the Hitaishi Benevolent Society.

NOTICE is hereby given that at an extraordinary general meeting held on the 22nd December 1934, the above-named Society has, by an extraordinary resolution, been put into voluntary liquidation and Sj. Charu Chandra Choudhury, c/o Sj. Rasamoy Choudhuri of Gang-char, Comilla, has been appointed the liquidator.

CHARU CHANDRA CHOUDHURY, Liquidator.

Comilla, the 26th December 1934. (82—1)

In the matter of the Provident Insurance Societies Act

and

In the matter of the Hitaishi Benevolent Society.

NOTICE is hereby given that a meeting of the creditors of the above-named Society will be held on the 14th January 1935, at 4-30 p.m., at the office of the liquidator, Gangchar, Comilla, in the house of Sj. Rasamoy Choudhuri.

CHARU CHANDRA CHOUDHURY, Liquidator.

Comilla, the 26th December 1934. (83—1)

In the matter of the Indian Companies Act, 1913, and

In the matter of the Renova, Limited (in liquidation).

NOTICE is hereby given that at an extraordinary general meeting of the members of the abovenamed Company, duly convened, and held at 20, Raja Basanta Roy Road, Calcutta, on the 29th day of December 1934, the following extraordinary resolution was duly passed :—

"Resolved that while it has been proved to the entire satisfaction of this meeting that the Company cannot by reason of its liabilities continue business, and that it is advisable to wind up the same and accordingly the Company be wound up voluntarily and that Mr. S. C. Das Gupta, B.Sc., Ll.B., of P.164, Lake Road, be and he is hereby appointed liquidator for the purpose of such winding up."

S. C. DAS GUPTA, Liquidator.

Dated Calcutta, P.164, Lake Road, the 2nd day of January 1935. (86—1)

In the matter of the Indian Companies Act, 1913, and In the matter of the Renova, Limited (in liquidation).

NOTICE is hereby given, pursuant to section 209 of the Indian Companies Act, 1913, that a meeting of the creditors of the abovenamed Company will be held at 20, Raja Basanta Roy Road, Calcutta, on the 21st day of January 1935, at 4 p.m.

S. C. DAS GUPTA, Liquidator.

Dated Calcutta, P.164, Lake Road, the 2nd day of January 1935 (87—1)

In the matter of the Indian Companies Act, 1913, and In the matter of the National Utility Services, Ltd. (in liquidation).

NOTICE is hereby given that at an extraordinary general meeting of the members of the abovenamed Company, duly convened, and held at 20, Raja Basanta Roy Road, Calcutta, on the 29th day of December 1934, the following extraordinary resolution was duly passed :—

"Resolved that while it has been proved to the entire satisfaction of this meeting that the Company cannot by reason of its liabilities continue business, and that it is advisable to wind up the same and accordingly the Company be wound up voluntarily and that Mr. S. C. Das Gupta, B.Sc., Ll.B., of P.164, Lake Road, be and he is hereby appointed liquidator for the purpose of such winding up."

S. C. DAS GUPTA, Liquidator.

Dated Calcutta, P.164, Lake Road, the 2nd day of January 1935. (88—1)

In the matter of the Indian Companies Act, 1913, and In the matter of the National Utility Services, Ltd. (in liquidation).

NOTICE is hereby given, pursuant to section 209 of the Indian Companies Act, 1913, that a meeting of the creditors of the abovenamed Company will be held at 20, Raja Basanta Roy Road, Calcutta, on the 21st day of January 1935, at 4 p.m.

S. C. DAS GUPTA, Liquidator.

Dated Calcutta, P.164, Lake Road, the 2nd day of January 1935. (89—1)

Imperial Library.

(Secretariat Buildings, 6, Esplanade East, Calcutta.)
Open on—

Week days and Saturdays from 10 a.m. to 7 p.m.
Sundays and Gazetted holidays from 2 p.m. to 5 p.m.

THE Imperial Library is also a Lending Library. It is free to all except children. There is no subscription to pay

K. M. ASADULLAH, Librarian.

THE COMMISSIONERS FOR THE PORT OF CALCUTTA.

Notice of Sale under sections 118 and 119 of the Calcutta Port Act, III of 1890 (B.C.)

NOTICE is hereby given that the liability of the Commissioners for the undermentioned goods consigned to order ex. the undermentioned vessels has in terms of section 113 of the abovementioned Act ceased on the expiration of three clear days from the date of landing. These goods accordingly remain on the Port Commissioners premises at the sole risk and expense of the owners and if not cleared on or before the 25th January 1935 on payment of all charges due will be sold by public auction :—

Steamer's name.	Date of landing.	Marks and numbers.	Quantity.	Description.
	1934.			
Hoogkerk ..	16th May ..	No mark	1	Tin milk.
Do. ..	Do. ..	Ditto	1	Piece circle plate.
City of Singapore ..	21st September ..	Kathkuyan, 43	1	Case merchandise.
Do.	18th September ..	R G S & S Ltd, 2	1	Case advertisements.
Hoogkerk ..	28th September ..	No mark	..	A quantity of cycle parts weighing about 7 lbs.
Hosang ..	8th October ..	S H L upon A	1	Bag merchandise.
Do.	9th October ..	No mark	1	Package merchandise.
Do.	Do.	Ditto	1	Bag merchandise.
Anchoria ..	16th October ..	990 in a diamond, S S on top, 3/4 ..	2	Cases merchandise.
City of New Castle ..	16th July ..	Fray & Co, Rawalpindi	3	Packages merchandise.
Maihar	2nd November ..	H in a diamond, Bhicanpur, 5 ..	1	Case merchandise.
Maidan	8th November ..	B K P & Co, 1/2	2	Cases merchandise.
Do.	Do.	Mazda, 63	1	Case merchandise.
Do. .. .	10th November ..	R B M & Co. in a diamond, 1/3 ..	3	Cases merchandise.
Liebenfels ..	16th November ..	B K P & Co, 1894/96	3	Ditto.
Do. ..	15th November ..	D L, 163	1	Case merchandise.
Do.	20th November ..	F R I C O, 3906/10	5	Cases merchandise.
Do.	17th November ..	1149 in a triangle, L Co. on top, 1105/2	1	Case merchandise.
Do.	16th November ..	N. L. Pyne, 8244	1	Ditto.
Do.	Do.	Planters B K P & Co. upon 7306, 1/2	2	Cases merchandise.
Do. . ..	20th November ..	2344 in a diamond, S A on top, M Y below, 1/2.	2	Ditto.
Do.	17th November .	S P upon 528, below Nepal ..	1	Case merchandise.
Pasha . ..	30th April ..	9691 upon Turner Morrison & Co, Ltd, below Sonrabaya in a block.	1	Keg merchandise.
Cedar Bank ..	21st September ..	P. F.	1	Case auto parts.
Kutsang ..	27th September ..	Toys upon sample in a triangle ..	1	Case toys.
Naringa ..	19th October ..	No mark ..	1	"Nong" (old scrap) piece.
Gairsoppa ..	15th October ..	Rajaram ..	1	Case provision.
Tactician ..	13th November ..	Dr. S. K. Burman in a double triangle, P D on top, & Co below, 1/2.	2	Cases merchandise.
Do. ..	12th November ..	S. F. M. upon T. Cook & Co, 1 ..	1	Package merchandise.
Karoa ..	23rd November ..	Messrs Ellerman Arracan Rice & Trading Co, Ltd.	1	Ditto.
Do. ..	Do. ..	Surrey & Co, Sialkot City ..	1	Case merchandise.
City of Ripon ..	27th October ..	B M upon 11 in a block ..	6	Bales old newspapers.
Himalaya Maru ..	19th November ..	316 in a diamond, R K on top, D S below.	1	Case buttons.

Steamer's name.	Date of landing.	Marks and numbers.	Quantity.	Description.
	1934.			
Himalaya Maru ..	21st November ..	Onoda ..	2	Casks cement.
Do. ..	Do. ..	A A in a diamond ..	1	Bundle shooks.
Do. ..	Do. ..	No mark ..	1	Package cycle parts.
Chyebassa ..	14th September ..	Ditto ..	3	Tin merchandise.
Howra ..	6th November ..	No mark ..	1	Bundle coir yarn.
Havre Maru ..	13th August ..	101 in a triangle, O K on top, 32/34	3	Cases merchandise.
Do. ..	15th August ..	═ in a diamond, No. 50 on top ..	1	Cut piece cloth.
Do. ..	17th August ..	Calcutta ..	1	Bag merchandise.
Takada ..	13th August ..	Essavi in a triangle, 327 ..	1	Bundle wood.
Barbarigo ..	27th August ..	B S, 41 ..	1	Case printed matters.
Do. ..	28th August ..	Various marks & no mark ..	11	Bags sulphur.
Do. ..	Do. ..	No mark ..	..	A quantity of sulphur weighing about 1 cwt.
Media ..	3rd September ..	3917 in a diamond, G N on top, CM below, 97.	1	Empty case.
Do. ..	Do. ..	3964 in a diamond, G N on top, C M below, 3.	1	Ditto.
Cortellazzo ..	27th September ..	R K. Allahabad, 1/10 ..	10	Cases glassware.
Do. ..	29th September ..	C A L	1	Bag sulphur.
Do. ..	Do. ..	No mark	..	A quantity of loose sulphur weighing about 1 cwt.
Tokushima Maru ..	26th October ..	Bata Shoe Coy. Ltd., Konnagar ..	1	Parcel sample rubber.
Do. ..	27th October ..	Sikri upon 5641 in a diamond, 3/4 ..	2	Cases merchandise.
Tiradentes ..	7th November ..	B K P & C L, 38510/11 ..	2	Bags corks.
City of Poona ..	13th October ..	H B upon 3684 in a diamond, S S on top, 288.	1	Case worsted tissues.
Do. ..	9th October ..	H B upon 3784 in a diamond, C C on top, 290.	1	Case wool and cotton piece-goods.
Gazana ..	4th July ..	No mark	1	Bundle coir yarn.
Kutsang ..	1st August ..	Ditto	1	Piece black pipe.
Bengal Maru ..	30th July ..	M. A. K., 187	1	Case sample paint o/s.
Morioka Maru ..	9th August ..	No mark	1	Piece undershirt.
Himalaya Maru ..	21st August ..	M in a diamond, 0565 on top ..	100	Packages acetic acid.
Nagato Maru ..	3rd September ..	No mark	1	Bag merchandise.
Do. ..	Do. ..	Do.	1	Piece undershirt.
Sumatra Maru ..	25th September ..	R J	1	Bag sugarcandy.
Do. ..	Do. ..	837 in a diamond, S & on top, Co below, 8124.	1	Case merchandise.
Hamburg Maru ..	10th October ..	No mark	1	Bag merchandise.
Do. ..	Do. ..	═ in a diamond, M B K ..	2	Bundles tea chest fittings.
Chyebassa ..	13th October ..	G O Penn	1	Case provision.
Do. ..	17th October ..	N G in a triangle, 2 below ..	1	Bale old wearing apparel.
Hague Maru ..	25th October ..	═ in a diamond	3	Bundles tea chest fittings.
Do. ..	Do. ..	No mark	..	A quantity of tea chest fittings weighing about 10 lbs.
Do. ..	Do. ..	═ in a diamond, S W & Co. below ..	1	Bag merchandise.

Steamer's name.	Date of landing.	Marks and numbers.	Quantity.	Description.
	1934.			
Clan Monroe ..	29th October ..	Moolkey upon 964 in a diamond, 2	1	Case merchandise.
Do. ..	30th October ..	A 64	1	Bag merchandise.
Do. ..	Do. ..	A 2	1	Ditto.
Do. ..	Do. ..	No mark	1	Bundle iron bars.
Bengal Maru ..	8th November ..	Ditto	2	Bundles wood.
Barbarigo ..	21st November ..	A. P., 1-2	2	Packages merchandise.
Volpi ..	22nd November ..	K S, 1932	1	Case electric apparatus.
Hakodate Maru ..	4th September ..	Sample in a diamond, 1 C on top, C O below, 500.	1	Case samples.
Borneo Maru ..	12th September ..	Robin in a block, K K on top, 581 ..	1	Case glassware.
Truenfels ..	14th September ..	J. C. M.	1	Case merchandise.
Makalla ..	8th October ..	Moolkey upon 964 in a diamond, 1 ..	1	Case merchandise.
Do. ..	Do. ..	X	2	Bags waste leather.
Do. ..	10th October ..	B B in a diamond, Y D on top, 269 ..	1	Bundle steel bars.
Celebes Maru ..	12th November ..	142 in a diamond, S M on top, & Co below, 6-10.	5	Cases Rayon flannel.
Do. ..	Do. ..	158 in a diamond, S M on top, & Co below, 1-5.	5	Ditto.
City of Auckland ..	28th August ..	Fray & Co., Rawalpindi	3	Packages merchandise.
Rotenfels ..	14th August ..	B L D, 548	1	Case plate glass.
Lahore ..	Do. ..	21 in a diamond, C C on top, 1 ..	1	Case merchandise.
Do. ..	18th August ..	A M upon 7216, 1-3	3	Cases perfumary.
Uhenfels ..	21st August ..	N. L. Pyne, 806, 8209-10 ..	3	Cases plate glass.
Do. ..	22nd August ..	Dossai upon M, 10	1	Case glass globes.
Dumana ..	25th August ..	R B in a double triangle, 7466 ..	1	Case machinery.
Magdapur ..	Do. ..	M & Co, A 1	1	Case merchandise.
M.V. Silva Guava	29th August ..	Java Bengal Line ..	1	Package advertising matters.
Do. ..	Do. ..	Davidson Ltd.	1	Ditto.
Do. ..	Do. ..	Hajee Tila Mohamad Bros. ..	1	Ditto.
Do. ..	Do. ..	Java Pacific Bengalen Line ..	1	Ditto.
Do. ..	Do. ..	Md. Khadin Sheik Chhedi ..	1	Ditto.
Do. ..	Do. ..	I C H V R, P A 63	1	Bag sulphur.
M.V. Oldham ..	22nd September ..	P. F, 1	1	Case advertising matters.
"Nagpore" ..	10th October ..	A R C	1	Cylinder.
Do. ..	Do. ..	T. H. M, 3637/8	2	Cases perfumery.
Do. ..	12th October ..	Symonds, 682	1	Case confectionery.
Do. ..	15th October ..	J. P. P. & Co, Kharagpur, 931 ..	1	Keg. sulphur.
Do. ..	Do. ..	Dakin upon B K P & Co, 1/6 ..	6	Cases medicines.
Braunfels ..	10th October ..	B. L. D., 7046, 9219/23 ..	6	Cases glass.
Japan ..	16th October ..	G M, 318	1	Case merchandise.
Do. ..	Do. ..	334-027 in a block, C on top, B O on sides, M below, 50/7.	8	Packages merchandise.

Steamer's name.	Date of landing.	Marks and numbers.	Quantity.	Description.
	1934.			
Modasa ..	23rd October ..	T V S in a diamond, 1 ..	1	Case confectionery.
Gierfels ..	24th October ..	G upon I	1	Case mineral oil.
Birmania ..	Do. ..	G C upon D S	100	Bags barytes.
Gambada ..	29th October ..	H K D ..	1	Bag green gram.
Mulbera ..	3rd November ..	B K P & Co, 57221, 8329, 6998/9 ..	4	Cases medicines.
Do. ..	5th November ..	Burgoyne upon B K P & Co, 1362 ..	1	Case medicine.
Do. ..	6th November ..	B K P & Co upon 399 in a diamond, E S on top, A R below, 1/2.	2	Cases paper labels.
Clan Malcolm ..	10th November ..	N. S. W upon Siwan, 5/8 ..	4	Cases merchandise.
Mashobra ..	10th November ..	SC, 9078	1	Drum essential oil.
Do. ..	20th November ..	BKP & Co., upon W.W., 1/4 ..	4	Cases virol, etc.
Do. ..	Do. ..	ML & Co., 1/2	2	Cases book matches.
Do. ..	Do. ..	Burgoyne BKP & Co., 1367/74 ..	8	Cases medicine.
Do. ..	23rd November ..	A upon 444	1	Case merchandise.
City of Perth ..	20th November ..	BKP upon 83313 (132), below 322057, 1/4.	4	Packages medicine.
Do. ..	Do. ..	BKP upon 87992 (50), below 322060, 1/20.	20	Cases merchandise.
Do. ..	Do. ..	BKP upon 41394, below 323814, 1/2	2	Cases soap and powder.
Do. ..	Do. ..	BKP upon 40955, below 317435 ..	1	Case rubber goods.
Do. ..	Do. ..	BKP upon 88879 (60), below 322059, 1/10.	10	Cases medicine.
Do. ..	Do. ..	BKP & Co., upon 119809, 1/4 ..	4	Cases tooth paste.
Bahadur ..	21st November ..	ART Co.	7	Cases Indian cigarettes.
Karapara ..	4th July ..	East Asiatic Coy.	1	Packet rice sample.
Warina ..	28th August ..	And in a triangle, J on top, PC on sides	1	Tin tapioca sample.
Bengalen ..	26th September ..	Murarka Paint Varnish ..	1	Box sample.
Do. ..	27th July ..	EM upon HTM, seeds below ..	1	Packet tapioca seed sample.
Do. ..	28th July ..	No mark	8	Bags sulphur sweepings
Birmania ..	25th October ..	KCTB	1	Case sulphur.
Do. ..	Do. ..	Do.	12	Bags sulphur.
Mahont ..	29th October ..	SH in a diamond, 1	1	Parcel samples.
Talamba ..	10th May ..	No mark	3	Pieces Radiator caps.
Clan Monroe ..	6th July ..	Do.	1	Piece flat bar.
	1933.			
Fagervik ..	8th July ..	No mark	7	Bags atta flour.
	1934.			
Clan Macilwraith ..	21st July ..	Bibby in a diamond	1	Bundle shovels.
Do. ..	Do. ..	MAC upon 27484 in a diamond, A I below, 87.	1	Package machinery parts.

Steamer's name.	Date of landing.	Marks and numbers.	Quantity.	Description.
	1933.			
Clan Macquarrie ..	24th July ..	No mark	2	Packages sugar mill machinery.
	1934.			
Shirala ..	15th November ..	Do.	4	Bundles planks.
Do. ..	Do. ..	Do.	3	Pieces planks.
Do. ..	Do. ..	R in a diamond	1	Piece plank.
Clan Macniel ..	14th September ..	No mark	1	Bag rivet.
Do. ..	Do. ..	Do.	3	Pieces alumino ferric.
Do. ..	Do. ..	Do.	1	Bundle hemp thread.
Marin Sanudo ..	1st October ..	Saima	1	Bag merchandise.
Silverash ..	7th October ..	No mark	1	Bag sulphur.
Hatipara ..	12th October ..	Do.	1	Bag rice.
Inchanga ..	6th October ..	Pure Alkali in a block, Crop Brand made by Magada Soda Coy. below.	1	Bag soda ash.
Mahronda ..	9th October ..	E. C. Nicifos II	2	Bags merchandise.
Clan Macnair ..	17th October ..	No mark	2	Pieces machinery parts.
Silverbelle ..	31st October ..	Do.	3	Bags sulphur.
Various ..	From 22nd June to 6th October.	Various	11	Packages sugar samples.
Penang Maru ..	21st August ..	F. I. C.	80	Pieces wooden ventilators.
Chaksang ..	25th September ..	Jardine Skinner & Co.	1	Parcel cigars.
		Unclaimed goods of I.V. Wharves.		
....	....	No mark	1	Piece log (lying at Babu Ghat).
	1934.			
Egra ..	16th August ..	Do.	1	Secondhand tricycle.

Calcutta, the 10th January 1935.

W. A. BURNS, *Traffic Manager.*

(85—1)

CINCHONA FACTORY PRODUCTS.

By order of the Government of Bengal Cinchona Factory Products as manufactured and packed at the Cinchona Factory, Mungpoo, Darjeeling district, will be sold and distributed by the Superintendent of the **Presidency Jail**, *in original packages* as received from the Mungpoo Factory, at the rates herein noted **from the 1st May 1926 :—**

Quinine Sulphate.

For 60 lbs. and upwards at a time .. Rs. 18 per lb.
For 6 lbs. and over but less than 60 lbs. at a time .. .. .. „ 19 „
For any quantity less than 6 lbs. .. „ 20 „

Quinine Hydrochloride.

For 60 lbs. and upwards at a time .. Rs. 23 per lb.
For 6 lbs. and over but less than 60 lbs. at a time .. .. .. „ 24 „
For any quantity less than 6 lbs. .. „ 25 „

Quinine Di-Hydrochloride.

For 60 lbs. and upwards at a time .. Rs. 25 per lb.
For 6 lbs. and over but less than 60 lbs. at a time .. .. .. „ 26 „
For any quantity less than 6 lbs. .. „ 27 „

Quinidine Sulphate.

For 60 lbs. and upwards at a time .. Rs. 20 per lb.
For 6 lbs. and over but less than 60 lbs. at a time .. .. .. „ 21 „
For any quantity less than 6 lbs. .. „ 22 „

Cinchonidine Sulphate.

For 60 lbs. and upwards at a time .. Rs. 25 per lb.
For 6 lbs. and over but less than 60 lbs. at a time .. .. .. „ 26 „
For any quantity less than 6 lbs. .. „ 27 „

Cinchonine Sulphate.

For 60 lbs. and upwards at a time .. Rs. 12 per lb.
For 6 lbs. and over but less than 60 lbs. at a time .. .. .. „ 13 „
For any quantity less than 6 lbs. .. „ 14 „

Cinchona Febrifuge (Powder).

For 60 lbs. and upwards at a time .. Rs. 9 per lb.
For 6 lbs. and over but less than 60 lbs. at a time .. .. .. „ 9 „
For any quantity less than 6 lbs. .. „ 10 „

Cinchona Febrifuge (Tablets).

For 60 lbs. and upwards at a time .. Rs. 10 per lb.
For 6 lbs. and over but less than 60 lbs. at a time .. .. .. „ 10 „
For any quantity less than 6 lbs. .. „ 11 „

Quinoidine (Tablets).

For 60 lbs. and upwards at a time .. Rs. 5 per lb.
For 6 lbs. and over but less than 60 lbs. at a time .. .. .. „ 5 „
For any quantity less than 6 lbs. .. „ 6 „

Quinoidine (In Mass).

For 60 lbs. and upwards at a time .. Rs. 4 per lb.
For 6 lbs. and over but less than 60 lbs. at a time .. .. .. „ 4 „
For any quantity less than 6 lbs. .. „ 5 „

Cinchona Bark (in 50 pound original bags).

Per bag .. .. .. Rs. 25.

per box of 200 tablets each.

Quinine Tablets——Rs. 2-8 (Bengal), Rs. 3 (outside Bengal)

Rs. 15-8-0 per lb.

Transit charges extra in every case.

Quinine Sulphate is for sale to Government Institutions and Missionaries only. It is not for sale to Private Firms or the General Public.

Cinchona Febrifuge in Powder and Tablet form (when in stock) is for sale to Government Institutions Missionaries and the General Public.

Quinine Sulphate will be supplied to Hospitals and Dispensaries of this Presidency only at the wholesale rate of Rs. 18 per lb., irrespective of quantities. For all other purchasers the rates given above will apply.

Five and ten boxes of Quinine Tablets are sold to the public at the concession rates which will be intimated in application.

Provinces other than Bengal, Bihar and Orissa and Assam will get their supplies of Sulph. Quinine from the Director, Botanical Survey of India, Sibpur, Howrah.

Local sale at the jail gate from 10 to 12 noon.

The system of payment is by—*Cash in advance*—by "*Treasury Challans*," which should accompany the order or indent.

In cases where this is not possible, payment should be made by "*Remittance Transfer Receipts*" or crossed "*Cheques.*"

Indents unaccompanied by cash in advance will be sent Value Payable Post. Credit sale is not allowed except under special circumstances.

In the case of *Government officers* payments will be recovered by *Book Transfer, i.e., Countersigned Invoices,* in the event of *Cash* not accompanying the indent by "*Treasury Challans,*" *Remittance Transfer Receipt or Cheque.*

2. Price and postage must accompany the price of the drug (when the drug is required by post).

The name of the Railway and Steamer Station or Post Office must be written distinctly when the parcels are required by Rail, Steamer or by Post. Railway parcels are sent by passenger train only.

A scale of postage is given below.

	1 oz.	2 ozs.	4 ozs.	½ lb.	¾ lb.	1 lb.
	As.	As.	As.	As.	As.	Rs. A.
Quinine Sulph. ..	..	..	7	7	11	0 11
Cinchona Feb. ..	..	..	7	7	11	0 11
Cinchona Feb. Tablets	..	..	7	7	11	0 11
Quinoidine Tablets ..	..	..	..	..	..	1 13
Quinine Hydrochlor. ..	5	5	7	7	..	0 11
Quinine Di-hydrochlor.	5	5	7	7	..	0 11
Quinine Tablets ..	..	..	7	7	11	0 11

	1½ lb.	2 lb.	3 lb.	4 lb.	5 lb.	6 lb.
	Rs. A.	Rs. A.	Rs. A.	Rs. A.	Rs. A.	Rs. A.
Quinine Sulph. ..	0 15	1 3	1 7	1 15	2 7	2 15
Cinchona Feb. ..	0 15	0 15	1 7	1 11	1 15	2 7
Cinchona Feb. Tablets	1 3	1 3	1 11	1 15	2 7	2 15
Quinoidine Tablets ..	..	2 3	3 3	..	..	..
Quinine Hydrochlor. ..	1 1	0 15	1 7	1 11	..	..
Quinine Di-hydrochlor.	1 1	0 15	1 13	2 5	..	..
Quinine Tablets ..	0 15	0 14	1 7	1 11	1 15	2 3

Two different drugs are not packed in the same parcel and postage must be paid separately for each kind.

N.B.—Postage stamps are not accepted as revenue.

Government reserve the right to alter the price without notice.

Registered No. C207

No. 2 of 1935

The Calcutta Gazette

THURSDAY, JANUARY 10, 1935.

CONTENTS:

	PAGE.		PAGE.
Statement under the Cotton Ginning and Pressing Factories Act, 1925 ..	33	Weather and Crop Report for the week ending 2nd January 1935	35—38
Statement of weekly gauge readings on the river Ganges at Rampur Boalia ..	34		

SUPPLEMENT.

Official Papers.

FORM C—BENGAL.

STATEMENT OF COTTON PRESSED IN THE BENGAL PRESIDENCY FOR THE WEEK ENDING THE 28th DECEMBER 1934.

[Section 5 (2) of the Cotton Ginning and Pressing Factories Act, 1925.]

Name of Division or block.	Number of bales pressed.				District included in the block.
	During the week.	During the corresponding week last year.	Since 1st September 1934 (the date prescribed by the Local Government as the commencement of the season).	During the corresponding period last year.	
The Bengal Presidency	260 bales of 400 lbs. each.	118	2,380	2,983	All districts in the Presidency.

J. B. McBRIDE,

Chief Inspector of Factories, Bengal.

Statement of weekly gauge readings on the river Ganges at Rampur Boalia for the week ending the 29th December 1934.

Date.	Hour.	Height of surface above P.W.D. datum.	Height of surface above P. W. D. datum on the same date last year.	Remarks.
1934.				Zero of gauge referred to B. M. on Rajshahi College step ; value 64·73.
23rd December	7 a.m.	40·36	39·66	Value of 0=40·26 P. W. D.
24th „	7 „	40·36	39·56	
25th „	7 „	40·44	39·36	
26th „	7 „	40·34	39·26	
27th „	7 „	40·24	39·21	Value of 0 = 36·84 P. W. D.
28th „	7 „	40·14	39·16	
29th „	7 „	40·04	39·06	

Highest recorded level on 26-8-1879=64·24.

Lowest recorded level on 24-4-1931=32·05.

J. MACKIE, *Subdivisional Officer,*

Rampur Boalia, the 1st January 1935. *Irrigation Department, Rajshahi.*

DISTRICT REPORTS ON WEATHER AND CROPS.

For the week ending on the 2nd January 1935.

Summary.—Dry weather continued. Sowing of spring crops is over. Reaping of winter paddy is approaching completion ; threshing continues. Prospects of standing crops are generally satisfactory. During the week ending Saturday, the 29th December 1934, 1,315 persons attended different relief centres and 842 persons received gratuitous relief in the distressed areas of Murshidabad. In Birbhum, 2,556 men were employed on test relief works on Saturday, the 29th December 1934. The average price of common rice for the province has fallen by about 2·39 per cent. as compared with that of the previous week.

Serial No.	District and sub-division.	Rainfall.	Price of common rice, in seers, per rupee.		Character of the weather, condition of crops, etc.
			This week.	Previous week.	
1	2	3	4	5	6
		Inches.			
1	24-Parganas ..	Nil	10 13/16	10 13/16	Weather seasonable. No damage to crops is reported. Fodder and water are sufficient. Export and import normal. Cattle-disease exists in places.
	Diamond Harbour	Nil	14	14	
	Barrackpore ..	Nil	10	10	
	Baraset ..	Nil	10	10	
	Basirhat ..	Nil	13	12	
2	Nadia ..	Nil	11½	11½	Weather seasonable. Prospects of standing crops are fair. No large export or import. Fodder and water are sufficient.
	Kushtia ..	Nil	11½	11½	
	Meherpur ..	Nil	11	11	
	Chuadanga ..	Nil	11	11	
	Ranaghat ..	Nil	10	10	
3	Murshidabad ..	Nil	11	10½	Weather cold and cloudy. Prospects of standing crops are fair. Stock of rice, fodder and water are sufficient. Cattle-disease is reported from Jangipur. Test relief works continue. 1,118 men, 176 women and 21 children attended relief centres. Number of persons receiving gratuitous relief in the distressed areas was 385, 284 and 173 in Kandi, Jangipur and Lalbagh, respectively, during the week ending Saturday, the 29th December 1934.
	Lalbagh ..	Nil	13	12½	
	Jangipur ..	Nil	13	12	
	Kandi ..	Nil	12½	11½	
4	Jessore ..	Nil	11	11	Weather seasonable. Prospects of standing crops are fair. No large export or import. Fodder and water are sufficient.
	Jhenidah ..	Nil	13	13	
	Magura ..	Nil	12	12	
	Narail ..	Nil	14	13	
	Bongaon ..	Nil	10	10	
	Khulna ..	Nil	13	13	Weather seasonable. Its effects on crops are good. Fodder and water are sufficient.
	Satkhira ..	Nil	15	13	
	Bagerhat ..	Nil	10	10	

Serial No.	District and sub-division.	Rainfall.	Price of common rice, in seers, per rupee.		Character of the weather, condition of crops, etc.
			This week.	Previous week.	
1	2	3	4	5	6
		Inches.			
6	Burdwan ..	Nil	11	11	Weather seasonable. Condition of crop is not satisfactory. Fodder and water are sufficient.
	Asansol ..	Nil	10	10	
	Katwa ..	Nil	11	11	
	Kalna ..	Nil	10	10	
7	Birbhum ..	Nil	13	13	Prospects of *rabi* crops are fair. Fodder and water are sufficient. 2,556 men were employed on test relief works on Saturday, the 29th December 1934.
	Rampurhat ..	Nil	10	10	
8	Bankura ..	Nil	10	10½	Weather seasonable. Harvesting of winter paddy is completed. Threshing is going on. Fodder and water are sufficient. Cattle-disease is reported from Onda thana.
	Vishnupur ..	Nil	10	10	
9	Midnapore ..	Nil	12½	12½	Harvesting of winter paddy is progressing. Condition of sugarcane is satisfactory. Fodder and water are sufficient.
	Contai ..	Nil	16	14	
	Tamluk ..	Nil	10	9½	
	Ghatal ..	Nil	12½	13½	
	Jhargram ..	Nil	13	13	
10	Hooghly ..	Nil	11	11	Weather seasonable. Fodder and water are sufficient.
	Serampore ..	Nil	10	10	
	Arambagh ..	Nil	11½	11½	
11	Howrah ..	Nil	10	10	Weather cold; its effects are good. Harvesting of winter paddy is in full swing. Potato cultivation is in progress. Fodder and water are sufficient.
	Uluberia ..	Nil	11	11	
12	Rajshahi (Rampur Boalia).	Nil	12	12	Weather seasonable and favourable to standing crops. Harvesting of winter paddy continues. Fodder and water are sufficient.
	Naogaon ..	Nil	10½	(*n*)	
	Nator ..	Nil	12	(*n*)	
13	Dinajpur ..	Nil	10	10	Weather seasonable. Its effects on agricultural operations are favourable. Fodder and water are sufficient.
	Thakurgaon ..	Nil	15	12	
	Balurghat ..	Nil	13	13	
14	Jalpaiguri ..	Nil	13	13	Weather seasonable. Fodder and water are sufficient.
	Alipur ..	Nil	13	13	

(*n*) Not reported.

Serial No.	District and sub-division.	Rainfall.	Price of common rice, in seers, per rupee.		Character of the weather, condition of crops, etc.
			This week.	Previous week.	
1	2	3	4	5	6
		Inches.			
15	Darjeeling ..	Nil	8	8	Weather favourable. Fodder and water are sufficient. Cattle-disease exists at places.
	Kurseong ..	Nil	7½	7½	
	Siliguri ..	Nil	13	13	
	Kalimpong ..	Nil	7	(n)	
16	Rangpur ..	Nil	13	10	Prospects of standing crops are fair. Harvesting of *aman* paddy is nearly finished. No large export or import. Fodder and water are sufficient. Cattle-disease is reported from Nowdanga in Kurigram.
	Nilphamari ..	Nil	13	10	
	Kurigram ..	Nil	13	10	
	Gaibandha ..	(n)	(n)	12	
17	Bogra ..	Nil	14½	14½	Weather seasonable. Condition of standing crops is fair. No damage is reported. Fodder and water are sufficient.
18	Pabna ..	Nil	10½	10½	Weather chilly. Condition of standing crops is good Harvesting of winter paddy is completed. Fodder and water are sufficient.
	Serajganj ..	Nil	10	10	
19	Malda ..	0·03	13	12½	Weather cloudy. Prospects of standing crops are fair. Fodder and water are available
20	Cooch-Behar ..	Nil	14 3/16	13 1/16	Weather seasonable. Transplantation of tobacco seedlings and harvesting of winter paddy continue. Prospects and condition of standing crops are fair. Fodder and water are sufficient.
21	Dacca ..	Nil	12	11½	Rainfall at North Sadar (Kapasia) nil. Weather seasonable and its effects on agricultural operations are good. Harvesting of *aman* paddy continues. Prospects of crops are good. Fodder and water are available.
	Manikganj ..	Nil	11½	11½	
	Narayanganj ..	Nil	10½	10½	
	Munshiganj ..	Nil	11½	11½	

(n) Not reported.

Serial No.	District and sub-division.	Rainfall.	Price of common rice, in seers, per rupee.		Character of the weather, condition of crops, etc.
			This week.	Previous week.	
1	2	3	4	5	6
		Inches.			
22	Mymensingh ..	Nil	10	10	Weather seasonable. Condition of crops is fair. Fodder and water are available.
	Jamalpur ..	Nil	13½	12½	
	Tangail ..	Nil	10½	10½	
	Netrakona ..	Nil	11	11	
	Kishorganj ..	Nil	10	10	
23	Faridpur ..	Nil	13	12½	Weather seasonable. Condition of standing crops is fair. Fodder and water are sufficient.
	Goalundo (Rajbari).	Nil	9½	9½	
	Madaripur ..	Nil	13½	13½	
	Gopalganj (*a*) ..	Nil	16	16	
24	Bakarganj (Barisal).	Nil	11½	11	Weather seasonable. Prospects of standing crops are good. Fodder and water are sufficient.
	Pirojpur ..	Nil	10½	10½	
	Patuakhali ..	Nil	12	13	
	Dakshin Shahbazpur (Bhola).	Nil	10½	10	
25	Chittagong ..	Nil	12 13*	12 13*	Weather seasonable. Harvesting of *aman* crops is almost completed. Prospects of crops are fair. Fodder and water are sufficient. Panga salt sells at 13 seers per rupee at Sadar and 12 seers per rupee at Cox's Bazar.
	Cox's Bazar ..	Nil	12	13	
26	Tippera (Comilla)	Nil	11	12½	Prospects of crops are fair generally. Cattle-disease exists in Chandpur.
	Brahmanbaria ...	Nil	10½	10½	
	Chandpur ..	Nil	13 5/16	13 5/16	
27	Noakhali ..	Nil	13½	13½	Weather seasonable. Standing crops are fair.
	Feni ..	Nil	14	14	
28	Chittagong Hill Tracts.	Nil	12	12	Weather seasonable.
29	Tripura State ..	Nil	12½	11¼	Weather seasonable. Condition of cattle is good. Condition of standing crop is fair. Fodder and water are sufficient. Cotton sells at Rs. 8 to 12½ and jute at Rs. 2-8 to Rs. 3-12 per maund.

(*a*) The rainfall at Haridaspur, which is very near to Gopalganj, is shown here.

* Burma rice.

J. C. BASU, for *Director of Agriculture, Bengal.*

Dacca, the 4th January 1935.

Printed and published by the Superintendent, Government Printing, Bengal, at the Bengal Government Press, Alipore, Bengal, on the 10th January 1935.

Registered No. C207

No. 3 of 1935

The Calcutta Gazette

Published by Authority

THURSDAY, JANUARY 17, 1935.

CONTENTS:

	Page.
Part I.—Orders and Notifications by the Government of Bengal, the High Court, Government Treasury, etc.	35—118
Part IA.—Orders and Notifications by the Government of India republished for general information	3—13
Part IB.—Educational Notices	109—214
Part II.—Advertisements	37—89
Part III.—Acts of the Bengal Legislative Council	*Nil*
Part IV.—Bills introduced in the Bengal Legislative Council, Reports of Select Committees presented or to be presented to that Council, and Bills published before introduction in that Council—	
The Bengal Tenancy (Amendment) Bill, 1934, with Statement of Objects and Reasons	1—3
The Bengal Tenancy (Amendment) Bill, 1934, with Statement of Objects and Reasons	3—4
The Bengal Forries (Amendment) Bill, 1934, with Statement of Objects and Reasons	5
The Bengal Tenancy (Amendment) Bill, 1934, with Statement of Objects and Reasons	6—7
The Bengal Medical (Amendment) Bill, 1934, with Statement of Objects and Reasons	8—9
The Bengal Municipal (Amendment) Bill, 1934, with Statement of Objects and Reasons	10—11
Notification eliciting opinion on the Bengal Municipal (Amendment) Bill, 1934	12
Part V.—Acts of the Indian Legislature assented to by the Governor-General and Ordinances promulgated under section 72 of the Government of India Act	*Nil*
Part VI.—Bills introduced in the Council of State and Legislative Assembly, Reports of Select Committees presented to the Council and Assembly and Bills published under rule 18 of the Indian Legislative Rules	*Nil*
Supplement No. 3 :—	
Finance Statements of Provincial and Central Co-operative Banks—Monthly Return of Vital Statistics—Monthly Weather and Crop Report—Weekly Weather and Crop Report—Prices-current—Weekly Vital Statistics—River water-levels—Cotton Ginning and Pressing—Weekly gauge readings—Major and Minor Works and Navigation	30—95

PART I

Orders and Notifications by the Governor of Bengal, the Government of Bengal, the High Court, Government Treasury, etc.

Orders by His Excellency the Governor of Bengal.

No. 43L.—12th January, 1935.—In exercise of the power conferred by sub-section (*2*) of section 72B of the Government of India Act, His Excellency the Governor is pleased to appoint Monday, the 11th February, 1935, at 3 p.m., as the time, and the Council House, Calcutta, as the place, for a meeting of the Bengal Legislative Council.

A. deC. Williams,
Secy. to the Govt. of Bengal.

No. 290A.—14th January 1935.—Under the provisions of section 93 of the Government of India Act, His Excellency the Governor is pleased to accept the resignation tendered by Sir Edward Benthall, Kt., of his office of member of the Bengal Legislative Council.

No. 293A.—14th January 1935.—Whereas a vacancy has occurred in the Bengal Chamber of Commerce constituency of the Bengal Legislative Council by reason of the resignation by Sir Edward Benthall, Kt., His Excellency the Governor is pleased, in pursuance of sub-rule (*1*) of rule 26 of the Bengal Electoral Rules, to call upon the said constituency to elect a person for the purpose of filling the vacancy by the 15th February 1935.

E. N. Blandy,
Chief Secy. to the Govt. of Bengal (offg.).

Orders by the Government of Bengal.

No. 372A.

Appointments and Transfers.

GENERAL.

Midnapore.—No. 218A.—3rd January 1935.—Mr. Sudhansu Kumar Haldar, I.C.S., officiating Additional District and Sessions Judge, Midnapore, is appointed temporarily to act, in addition to his own duties, as District and Sessions Judge of that district.

Nadia - 24-Parganas. — No. 95A. — 5th January 1935.—Babu Shankar Nath Sen, Deputy Magistrate and Deputy Collector, Kushtia, Nadia, is transferred to the headquarters station of the 24-Parganas district.

Howrah.—No. 102A.—5th January 1935.—Babu Radhika Mohan Basak, Sub-Deputy Collector, on leave, is posted to the headquarters station of the Howrah district.

Dacca.—No. 106A.—5th January 1935.—Babu Debabrata Mallik, Deputy Magistrate and Deputy Collector, Dacca, on leave, is posted to the Manikganj subdivision of that district.

Dacca - Khulna.—No. 110A.—5th January 1935.—Maulvi Abdul Aziz, Deputy Magistrate and Deputy Collector, Manikganj, Dacca, is transferred to the Bagerhat subdivision of the Khulna district.

Pabna.—No. 114A.—5th January 1935.—Rai Binod Bihari Sarkar Bahadur, Deputy Magistrate and Deputy Collector, Pabna, is appointed to have charge of the Sadar subdivision of that district.

24-Parganas-Dinajpur.—No. 122A. — 7th January 1935.—Rai Sarada Prasanna Ghosh Bahadur, Deputy Magistrate and Deputy Collector, 24-Parganas, is appointed temporarily to act as Magistrate and Collector, Dinajpur.

24-Parganas. — No. 125A.—7th January 1935.—Babu Birendra Mohan Ghosh, Deputy Magistrate and Deputy Collector, 24-Parganas, is appointed temporarily to have charge of the Sadar subdivision of that district.

Nadia-24-Parganas-Burdwan. — No. 127A.—7th January 1935.—Babu Satish Chandra Mazumdar, Deputy Magistrate and Deputy Collector, Ranaghat, Nadia, is appointed to have charge of the Sadar subdivision of the 24-Parganas district.

This cancels the orders of the 8th December 1934 appointing him to have charge of the Katwa subdivision of the Burdwan district.

Nadia.—No. 134A.—7th January 1935.—Mr. Annada Sankar Ray, I.C.S., on leave, is appointed to have charge of the Kushtia subdivision of the Nadia district.

Malda-Dacca Divn. — No. 138A. — 7th January 1935.—Babu Akshay Kumar De, Sub-Deputy Collector, Malda, is posted temporarily to the Dacca Division.

Khulna-Dacca Divn.—No. 143A. — 7th January 1935.—Babu Purna Chandra Sen, Sub-Deputy Collector, Khulna, is posted temporarily to the Dacca Division.

Rajshahi - Dinajpur - Jalpaiguri-Darjeeling.—No. 246A.—10th January 1935.—Mr. S. S. R. Hattiangadi, I.C.S., Joint Magistrate and Deputy Collector, Naogaon, Rajshahi, is appointed temporarily to act as District and Sessions Judge, Dinajpur, Jalpaiguri and Darjeeling.

Rajshahi.—No. 251A.—10th January 1935.—Maulvi Muhammad Hafizur Rahman, Deputy Magistrate and Deputy Collector, Rajshahi, is appointed temporarily to have charge of the Naogaon subdivision of that district.

Dinajpur.—No. 254A.—10th January 1935.—Babu Gaur Chandra Mandal, Deputy Magistrate and Deputy Collector, Dinajpur, is appointed temporarily to have charge of the Sadar subdivision of that district.

Hooghly - Chittagong.—No. 268A.—11th January 1935.—Mr. Ajoy Kumar Ghosh, I.C.S., Assistant Magistrate and Collector, Hooghly, is transferred to the headquarters station of the Chittagong district.

Nadia.—No. 277A.—11th January 1935. — The orders of the 22nd December 1934, posting Babu Gopendra Kumar Ghosh Chaudhuri, Deputy Magistrate and Deputy Collector, on leave, to the headquarters station of the Nadia district, are cancelled.

Jessore-Khulna.—No. 327A.—14th January 1935.—Maulvi Sayidur Rahman, officiating Additional District and Sessions Judge, Jessore, is appointed to act, until further orders, as Additional District and Sessions Judge, Jessore and Khulna.

Tippera-Jessore.—No. 332A.—14th January 1935.—Babu Raman Chandra Banarji, Subordinate Judge and Assistant Sessions Judge, Tippera, is appointed temporarily to act as Additional District and Sessions Judge, Jessore.

POLICE.

Calcutta.—No. 261A.—10th January 1935.—Rai Sahib Upendra Nath Datta, Inspector of Police, Intelligence Branch, is appointed temporarily to act as Deputy Superintendent of Police and is posted to that department.

Pabna - Rajshahi. — No. 262A. — 10th January 1935.—Babu Mahim Chandra Sarkar, Inspector of Police, Pabna, is appointed temporarily to act as Deputy Superintendent of Police and is posted to the headquarters station of the Rajshahi district.

ECCLESIASTICAL.

Calcutta.—No. 14721A. — 20th December 1934.—The Reverend G. Buchanan, a Chaplain on probation on the Indian Ecclesiastical Establishment, is appointed to be Second Chaplain, St. Andrew's Church, Calcutta, with effect from the 7th December 1934.

Leave.

GENERAL.

Rajshahi.—No. 86A.—5th January 1935.—In modification of the orders of the 24th December 1934, Babu Kanti Chandra Mukharji, Deputy Magistrate and Deputy Collector, Rajshahi, is allowed privilege leave for three months, under article 260 of the Civil Service Regulations, with effect from the 9th January 1935.

Dinajpur.—No. 152A.—7th January 1935.—Babu Kshitish Chandra Haldar, Deputy Magistrate and Deputy Collector, Dinajpur, is allowed leave on average pay up to the 22nd May 1935, under rule 81 (*b*) (*ii*) of the Fundamental Rules, with effect from the 26th January 1935, or any subsequent date on which he may avail himself of it.

Calcutta.—No. 161A.—7th January 1935.—Mr. N. G. A. Edgley, I.C.S., Secretary to the Government of Bengal in the Judicial Department and Superintendent and Remembrancer of Legal Affairs, Bengal, is allowed leave on average pay, under rule 81 (*b*) (*i*) of the Fundamental Rules, from the 2nd January to the 26th January 1935, inclusive.

Nadia.—No. 171A.—8th January 1935.—Mr. Abul Muzaffar Ahmad, District and Sessions Judge, Nadia, was allowed leave on average pay for four days, under rule 81 (*b*) (*ii*) of the Fundamental Rules, with effect from the 2nd January 1935.

Dinajpur.—No. 178A.—8th January 1935.—Babu Manoranjan Das Gupta, Sub-Deputy Collector, Balurghat, Dinajpur, is allowed leave up to the 7th August 1936, viz., leave on average pay for four months, under rule 81 (*b*) (*ii*) of the Fundamental Rules, with effect from the 2nd January 1935 or any subsequent date on which he may avail himself of it, and leave on half average pay for the remaining period, under rule 81 (*d*) of those rules.

No. 181A.—8th January 1935.—Maulvi Kabiruddin Ahmad Khan, Sub-Deputy Collector, was allowed leave on average pay up to the 22nd December 1934, under rule 81 (*b*) (*ii*) of the Fundamental Rules, in extension of the leave granted to him under the orders of the 27th August 1934.

Pabna.—No. 194A.—9th January 1935.—Babu Sharat Chandra Guha, Sub-Deputy Collector, Sirajganj, Pabna, is allowed leave on average pay for four months, under rule 81 (*b*) (*ii*) of the Fundamental Rules, with effect from the 26th November 1934.

No. 234A.—10th January 1935.—Babu Uma Charan Barua, Sub-Deputy Collector, is allowed leave on half average pay for four months, under rule 81 (*d*) of the Fundamental Rules, in extension of the leave granted to him under the orders of the 4th April 1934.

Bakarganj.—No. 301A.—12th January 1935.—Mr. Hiranmay Banerjee, I.C.S., Joint Magistrate and Deputy Collector, Bakarganj, was allowed leave on average pay for three days, under rule 81 (*b*) (*ii*) of the Fundamental Rules, with effect from the 2nd January 1935.

No. 321A. — 12th January 1935. — Maulvi Muhammad Ishaq, No. II, Sub-Deputy Collector, is allowed leave on average pay for two months, under the proviso to rule 81 (*b*) (*ii*) of the Fundamental Rules, in extension of the leave granted to him under the orders of the 9th October 1934.

POLICE.

Rajshahi.—No. 263A.—10th January 1935.—Rai Sahib Promode Nath Mukharji, Deputy Superintendent of Police, Rajshahi, is allowed leave on average pay for one month and six days, under rule 81 (*b*) (*ii*) of the Fundamental Rules, with effect from the 2nd January 1935.

E. N. BLANDY,

Chief Secy. to the Govt. of Bengal (offg.).

NOTIFICATIONS.

No. 205A.—9th January 1935.—Mr. Niaz Muhammad Khan, I.C.S., having passed the second class Interpretership Examination in Bengali in accordance with the rules for the encouragement of the study of Oriental Languages, is authorised to draw the prescribed reward of Rs. 500.

No. 258A.—10th January 1935.—In notification No. 14511A., dated the 17th December 1934, published at pages 1949-1951 of Part I of the *Calcutta Gazette*, dated the 20th December 1934, announcing the result of the second half-yearly departmental examination held in November 1934, *for* "Bijay Krishna Bose" in item (*i*) under "Irrigation officers" who have passed by the second or higher standard, *read* "Bijay Kumar Basu."

No. 295A.—14th January 1935.—Whereas by notification No. 293A., dated the 14th January 1935, His Excellency the Governor has been pleased to call upon the Bengal Chamber of Commerce constituency of the Bengal Legislative Council to elect a member to the said Council in place of Sir Edward Benthall, Kt., resigned:

Now, therefore, the Governor in Council is pleased, in exercise of the powers conferred by clauses (*a*) and (*b*) of sub-rule (*2*) of rule 11 of the Bengal Electoral Rules, and in pursuance of sub-rule (*3*) of that rule, to prescribe the 22nd January 1935 as the date for the nomination of candidates and for the delivery of nomination papers to the Returning Officer and the 23rd January 1935 as the date on which the scrutiny of nominations shall be held.

E. N. BLANDY,

Chief Secy. to the Govt. of Bengal (offg.).

POLITICAL DEPARTMENT.

Political.

NOTIFICATIONS.

No. 333P.—12th January 1935.—In exercise of the power conferred by sub-rule (*1*) of rule 16A of the Bengal Suppression of Terrorist Outrages Rules, 1934, published in the Government of Bengal, Political Department, notification No. 6177P., dated the 14th June 1934, the Governor in Council is pleased to declare that the district of Faridpur shall be an emergency area for the purposes specified in the said sub-rule.

Faridpur.—No. 241P.—14th January 1935.—In exercise of the powers conferred by sub-section (*1*) of section 3 of the Ancient Monuments Preservation Act, 1904 (VII of 1904), the Governor in Council is pleased to declare the monument called a Deul at Mathurapur near Madhukhali in the district of Faridpur and bounded as follows to be a protected monument within the meaning of the said Act:—

North—District settlement plot No. 1109 at a distance of 12 feet from the northern limits of the Deul up to the north-east corner of the site of the Kali temple with surrounding land at a distance of 24 feet east from the roadway in district settlement plot No. 1108 and then along the eastern boundary of the said Kali temple (with surrounding land), a distance of 18 feet south from the southern boundary of district settlement plot No. 1109 and along the southern boundary of the said Kali temple (with surrounding land), a distance of 24 feet and meeting the roadway in plot No. 1108 at a distance of 18 feet from the southern boundary of the aforesaid plot No. 1109;

East—District settlement plot No. 1189 at a distance of 12 feet from the eastern limits of the Deul;

South—District settlement plot No. 1189 at a distance of 50 feet from the southern limits of the Deul; and

West—Roadway recorded in district settlement plot No. 1108 at a distance of 59 feet from the western limits of the Deul up to the south-west corner of the site of the Kali temple (with surrounding land) in district settlement plot No. 1189 where it meets western extremity of the northern boundary.

2. Any objections to the issue of the notification which are received by the undersigned within one month from the date on which a copy of the notification is displayed in a conspicuous place on or near the said monument will be taken into consideration.

E. N. BLANDY,

Chief Secy. to the Govt. of Bengal (offg.).

Jails.

NOTIFICATIONS.

Dacca.—No. 113P.J.—12th January 1935.—Mr. R. W. Morde, Deputy Magistrate, acted as Superintendent of the Dacca Central Jail, in addition to his own duties, during the absence, on leave, of Mr. A. H. W. Leonard from the 21st November to the 1st December 1934.

Dacca.—No. 117P.J.—12th January 1935.—Mr. A. H. W. Leonard, Superintendent, Dacca Central Jail, was granted leave on average pay for eleven days from the 21st November 1934, under rule 81 (*b*) (*ii*) of the Fundamental Rules.

E. N. BLANDY,

Chief Secy. to the Govt. of Bengal (offg.).

Orders by the Commissioner of Police, Calcutta.

Calcutta, the 11th January 1935.

In exercise of the power conferred on me in rule 63(*2*) of the Bengal Jail Code, I reappoint Mrs. K. C. De, M.B.E., to be a non-official visitor of the Presidency Jail for the inspection of female prisoners.

L. H. COLSON,

Commissioner of Police.

POLICE DEPARTMENT.

NOTIFICATIONS.

No. 89Pl.—7th January 1935.—In exercise of the power conferred by section 6 of the Bengal Places of Public Amusement Act, 1933 (Bengal Act X of 1933), the Governor in Council is pleased to declare that the playing of the following game in any place of public amusement notified as such under section 3 of the said Act to be against the public interest, namely:—

"Ball throwing into grids" in which a ball is thrown into a sort of grid with different numbers and the result of the game depends more on chance than on the skill of each individual competitor.

No. 164Pl.—12th January 1935.—The following draft of an amendment which, in exercise of the powers conferred by section 2 and sub-section (*1*) of section 8 of the Poisons Act, 1919 (XII of 1919), the Governor in Council proposes to make in the rules regulating the possession for sale and sale of poisons in Bengal, published under notification No. 5303Pl., dated the 12th December 1931, is hereby published for the information of persons likely to be affected thereby.

2. The draft will be taken into consideration on or after the 1st March 1935, and any objection or suggestion received by the undersigned with regard thereto before that date will be duly considered:—

Draft amendment.

After item "15. Chloroform" of Schedule II appended to the said rules, *add* the following item, namely—

"16. (*a*) *Barbituric acid group.*—Barbitone or veronal, Sodium barbitone or medinal, Proponyl, Neonal or soneryl, Dial, Phenobarbitone or luminal, Sodium luminal, Phanadorm, Evipan, Sodium evipan, Pento-barbitone, Nembutal, Ipral, Allonal, Veramon, Gardenal, Cibalgin, Somnifaine, Sodium hebaral, Beatol, Quadronox, Amytal, Pernocton.

(*b*) *Sulphone group.*—Sulphonal, Trional, Tetronal.

(*c*) *Chloral group.* — Chloral, Chloral hydrate, Chloralamide, Butyl chloral, Chloralose, Chlorbutol, Hypnal, Dormiol, Ural, Isopral, Bromal, Paraldehyde, Amylene hydrate, Aponal, Hedonal, Neuronal, Avertin.

2. This cancels notification No. 3445Pl., dated the 15th June 1934, published at page 866 of Part I of the *Calcutta Gazette* of the 21st June 1934.

E. N. BLANDY,

Chief Secy. to the Govt. of Bengal (offg.).

JUDICIAL DEPARTMENT.

No. 373A.

Powers.

Darjeeling.—No. 56A.—5th January 1935.—Babu Binod Chandra Sen, Deputy Magistrate and Deputy Collector, Darjeeling, is vested with the powers of a Subordinate Judge in that district and also with the powers of a munsif within the Sadar subdivision of that district.

Birbhum.—No. 323A.—12th January 1935.—Babu Prakash Chandra Datta, Sub-Deputy Magistrate, Rampurhat, Birbhum, is vested with powers under section 110 of the Code of Criminal Procedure.

E. N. BLANDY,

Chief Secy. to the Govt. of Bengal (offg.).

Appointments and Transfers.

Hooghly - Dacca.—No. 206J.—12th January 1935.—Babu Ajita Ranjan Mukharji, who last acted as a munsif of Arambagh, in the district of Hooghly, is appointed to act as a munsif in the district of Dacca, to be ordinarily stationed at the Sadar station, during the absence, on leave, of Babu Atul Bihari Mallik, or until further orders.

Midnapore.—No. 72J.—5th January 1935.—In exercise of the powers conferred by sections 14 and 15 and the proviso to section 357 of the Code of Criminal Procedure, 1898 (Act V of 1898), the Governor in Council is pleased—

(*a*) to confer upon Babu Nripendra Gopal Mitra the powers of a Magistrate of the third class, in the district of Midnapore, for a period of three years from the date of this notification, in respect to such cases as may be made over to him within the limits of the Jhargram subdivision of the said district,

(*b*) to direct that he shall, in addition to sitting singly, sit as a member of the Jhargram bench in the said district, and

(*c*) to direct him to take down evidence in the English language.

Midnapore.—No. 74J.—5th January 1935.—In exercise of the powers conferred by sections 14 and 15 of the Code of Criminal Procedure, 1898 (Act V of 1898), the Governor in Council is pleased—

(*a*) to confer upon Babu Srish Chandra Ray the powers of a Magistrate of the third class, in the district of Midnapore, for a period of three years from the date of this notification, in respect to such cases as may be made over to him within the limits of the Jhargram subdivision of the said district, and

(*b*) to direct that he shall, in addition to sitting singly, sit as a member of the Jhargram bench in the said district.

Leave.

Dacca.—No. 76J.—7th January 1935.—Babu Hira Lal Mukharji, late officiating Additional District and Sessions Judge, Dacca, is allowed leave on average pay up to the 23rd December 1934, on medical certificate, under the proviso to rule 81 (*b*) (*ii*) of the Fundamental Rules, in extension of the leave already granted to him.

Hooghly.—No. 114J.—4th December 1934.—Babu Binay Bhusan Sen, munsif of Arambagh, in the district of Hooghly, is allowed leave on average pay for the period from the 10th to the 13th December 1934, under rules 81 (*b*) (*ii*) and 82 (*b*) of the Fundamental Rules.

Burdwan.—No. 115J.—7th December 1934.—Babu Sailesh Chandra Chakrabatti, munsif of Katwa, in the district of Burdwan, is allowed leave on average pay for the period from the 22nd November to the 22nd December 1934, under rules 81 (*b*) (*ii*) and 82 (*b*) of the Fundamental Rules.

Khulna.—No. 116J.—8th December 1934.—Maulvi Shahabuddin Ahmed, munsif of Khulna (Sadar), is allowed leave on average pay for one month, under rules 81 (*b*) (*ii*) and 82 (*b*) of the Fundamental Rules, with effect from the 2nd January 1935.

Midnapore. — No. 117J. — 8th December 1934.—Babu Naresh Chandra Chakrabatti, No. I, munsif of Contai, in the district of Midnapore, is allowed leave on average pay for the period from the 21st November to the 8th December 1934, under rules 81 (*b*) (*ii*) and 82 (*b*) of the Fundamental Rules.

24-Parganas.—No. 118J.—12th December 1934.—Mr. Kiran Kumar Bhattacharji, additional munsif of Alipore, in the district of the 24-Parganas, is allowed leave on half average pay on urgent necessity for fourteen days, under rule 82 (*c*) of the Fundamental Rules, with effect from the 1st December 1934.

Nadia.—No. 119J.—12th December 1934.—Babu Matilal Das, munsif of Kushtia, in the district of Nadia, is allowed leave on average pay for four days, under rules 81 (*b*) (*ii*) and 82 (*b*) of the Fundamental Rules, with effect from the 2nd January 1935.

Tippera.—No. 120J.—12th December 1934.—Babu Pratul Chandra Ray, munsif of Brahmanbaria, in the district of Tippera, is allowed leave on average pay for the period from the 2nd to the 5th January 1935, under rules 81 (*b*) (*ii*) and 82 (*b*) of the Fundamental Rules.

Pabna - Bogra.—No. 121J.—12th December 1934.—Babu Manindra Mohan Bhattacharji, munsif of Pabna, in the district of Pabna and Bogra, is allowed leave on average pay for seven days, under rules 81 (*b*) (*ii*) and 82 (*b*) of the Fundamental Rules, with effect from the 2nd January 1935.

Mymensingh.—No. 122J.—13th December 1934.—Babu Phanindra Kumar Singh, munsif of Mymensingh (Sadar), is allowed privilege leave on full pay for thirteen days, under the amendment to article 271 of the Civil Service Regulations, with effect from the 10th December 1934.

T. J. Y. ROXBURGH,

Secy. to the Govt. of Bengal (offg.).

LOCAL SELF-GOVERNMENT DEPARTMENT.

NOTIFICATIONS.

Minister-in-charge: The Hon'ble Sir Bijoy Prasad Singh Roy, Kt.

Nadia.—No. 37M.—3rd January 1935.—The following draft of a set of by-laws, which has been framed by the Commissioners of the Nabadwip Municipality, in the district of Nadia, under section 355 of the Bengal Municipal Act, 1932 (Bengal Act XV of

1932), and which the Government of Bengal (Ministry of Local Self-Government) propose to confirm under section 506 of the Act, is published for the information of persons likely to be affected thereby.

2. The draft will be taken into consideration on the 1st March 1935, and any objection or suggestion received by the undersigned through the District Magistrate and the Divisional Commissioner before that date will be duly considered:—

Draft by-laws.

By-laws regulating the use of, and prevention of nuisance in regard to, public water-supply, bathing and washing places, streams, channels, tanks and wells.

Definition.

1. In these by-laws the word "channel" shall include "nala," "river," "stream," "ditch," or "watercourse."

Penalty.

2. *Fines.*—The penalty for the infringement of any of these by-laws shall be—

(*a*) a fine not exceeding the sum stated at the foot of the by-law,

(*b*) in the case of a second or subsequent conviction for a similar offence, a fine not exceeding the sum (if any) stated in that behalf at the foot of the by-law, and

(*c*) in the case of a continuing offence, a further fine not exceeding the sum (if any) stated at the foot of the by-law as the daily fine, which daily fine may be imposed for each day after written notice of the offence from the Commissioners.

3. *Setting up obstruction.*—No person shall, without the general or special permission of the Commissioners, set up any obstruction in any channel which is a source of public water-supply.

Explanation.—The spreading of fishing-nets and the placing of fishing-traps in any such channel are included in the word "obstruction" as used in this by-law.

Fine, Rs. 10; daily fine, Rs. 2.

4. *Easing oneself.*—No person shall ease himself at the side of or into any channel.

Fine, Rs. 10.

5. *Throwing rubbish, sewage or offensive matter.*—No person shall throw, deposit or discharge any rubbish, sewage or offensive matter into any channel, tank or well.

Fine, Rs. 10; on a second or subsequent conviction, Rs. 50.

6. *Cleanliness of banks, and access for conservancy.*—Every owner or occupier of any part of the bank of any channel which is a source of public water-supply shall—

(*a*) keep such bank free from filth, dense vegetation and other obstruction, and

(*b*) at all times allow the Commissioners, or any of their servants duly authorised in this behalf, to have access to such channel for any purpose of public conservancy.

Fine, Rs. 10.

7. *Weeds.*—Any person taking weeds from a channel or tank shall completely remove them from the slope and crest of such channel or tank within three days.

Fine, Rs. 10; daily fine, Rs. 2.

8. *Masonry platforms and drains for wells.*—The owner of every well which is a source of public water-supply shall construct a masonry platform and drains to prevent the surface water falling into the well or stagnating in its vicinity.

Fine, Rs. 10; daily fine, Rs. 2.

9. *Bathing or washing near well or standpipe.*—No person shall bathe, or shall wash clothes, utensils or any other article, within a distance of ten feet from the lowest platform of any well, pump, standpipe or hydrant.

Fine, Rs. 10.

10. *Use of standpipes and fountains.*—Except with the general or special permission of the Commissioners and under such conditions as they may from time to time prescribe, no person shall use any standpipe, pump,

hydrant or fountain belonging to the Commissioners for any purpose other than drawing water—

(*a*) for drinking on the spot, or
(*b*) for carrying away for domestic purposes.

Fine, Rs. 10.

11. No person shall put his mouth to any tap or cock attached to any standpipe or hydrant used by the public.

Fine, Rs. 10.

12. No person shall cause damage to any hydrant, standpipe, pump, fountain, water-tap or cock belonging to the Commissioners or tamper with any of their property connected with the waterworks in such a manner as to affect the use of public water-supply.

Fine, Rs. 20.

13. No person suffering from leprosy or any other contagious disease shall touch or draw water from any standpipe used by the public.

Fine, Rs. 20.

14. *Steeping jute, hemp, etc.*—No person shall, without the general or special permission of the Commissioners, steep in any tank or channel any jute, hemp or other vegetable matter which is likely to render the water offensive or noxious to the neighbourhood.

Fine, Rs. 10; on a second or subsequent conviction, Rs. 50.

15. *Washing infected articles.*—No person shall wash or cause to be washed in or near any tank or channel or any other receptacle for water used by the public for drinking or bathing purposes any clothes, bedding or other articles which have been used by a person suffering from any infectious or contagious disease.

Fine, Rs. 50.

16. *Bathing by infected persons.*—No person suffering from any infectious or contagious disease shall bathe in any public bathing place.

Fine, Rs. 10.

17. *Bathing places reserved for females.*—No male person above twelve years of age shall stand on or near, or bathe or wash in, any bathing place which has been reserved by the Commissioners at a meeting for the use of females only.

Fine, Rs. 10.

18. *Cattle troughs.*—No person shall use for any other purpose any drinking trough which has been reserved by the Commissioners for watering cattle.

Mymensingh.—No. 164M. — 10th January 1935.—In exercise of the power conferred by sub-section (*1*) of section 19 of the Bengal Municipal Act, 1932 (Bengal Act XV of 1932), the Government of Bengal (Ministry of Local Self-Government) are pleased to make the following rule:—

Rule.

In the Mymensingh Municipality in the district of Mymensingh, out of sixteen seats to which Commissioners are to be elected under section 16 of the Bengal Municipal Act, 1932 (Bengal Act XV of 1932), five seats shall be reserved for the Muhammadan community which is declared to be a minority community in the said municipality for the purpose of the election.

No. 199L.S.-G.—11th January 1935.—In exercise of the power conferred by clause (*k*) of sub-section (*2*) of section 101 of the Bengal Village Self-Government Act, 1919 (Bengal Act V of 1919), the Government of Bengal (Ministry of Local Self-Government) are pleased to make the following amendments in the rules published under notification No. 1998 L.S.-G., dated the 3rd July 1920, as subsequently amended:—

Amendments.

I. *For* Form No. 2 referred to in rule 17, the following form shall be *substituted*:—

"FORM No. 2.

Receipt for union rate.

(Duplicate to be filled up by carbon paper process.)

Name of union.

Serial No. in assessment list.

Name of owner or occupier.

On account of for the year

Total Rs. annas pies

On account of penalties under section 41.

Total Rs. annas pies

Dated the

Collecting Member or Officer."

II. In rule 17, *insert* the following at the end:—

"To safeguard against fraud the President shall occasionally compare a few of the receipts granted by the collecting member or sarkar to the tax-payers with the duplicates kept in the office."

Mymensingh.—No. 165M.—10th January 1935.—In exercise of the power conferred by section 20 of the Bengal Municipal Act, 1932 (Bengal Act XV of 1932), the Government of Bengal (Ministry of Local Self-Government) are pleased to direct after consideration of the views of the Commissioners of the Mymensingh Municipality at a meeting, that—

(*1*) the Mymensingh Municipality, in the district of Mymensingh, shall for the purpose of election of Commissioners be divided into six wards as shown in columns 1 and 2 of the following table; and

(*2*) the two wards A and B of the said municipality shall be grouped into one special ward for the purpose of election to one of the five seats reserved for the minority community in this municipality and that the number of Commissioners to be elected from the different wards (including the special ward) of the municipality shall be as shown in columns 3 and 4 of the table :—

Name of ward.	Boundaries or extent of ward.	Number of seats other than the reserved seat shown in column 4 to which Commissioners are to be elected.	Number of seat reserved for the minority community.
1	2	3	4
A	North—River Brahmaputra and Begunbari Khal	2	1
	East—River Brahmaputra, Koranipara Road, Panditbari Bye-Lane, Ram Babu's Road and Radhika Naha's Road.		
	South—Boundary Road.		
	West—Bonudary Road, Galganda Road and a line in continuation of Galganda Road up to the river.		
B	North—Koranipara Road	2	
	East—River Brahmaputra, Kamarpatty Road.		
	South—Kamarpatty Road, Shakheripatty Road and Ram Babu's Road.		
	West—Ram Babu's Road, Panditbari Bye-Lane.		
C	North—Ram Babu's Road, Boundary Road	2	1
	East—Chandrakanta Ghose's Road, South Boundary Bye-Lane.		
	South—Boundary Road, Ramkrishna Mission Road, South Boundary Road.		
	West—South Boundary Road, Dapunia Road, Railway Line, Radhika Naha's Road.		
D	North—River Brahmaputra, Kamarpatty Road	2	1
	East—River Brahmaputra, Maharaja Road.		
	South—Maharaja Road, Station Road.		
	West—Shakheripatty Road, Kamarpatty Road.		
E	North—Maharaja Road, River Brahmaputra	2	1
	East—River Brahmaputra, a line through Assam Bengal Railway colony from the river to Eastern Bengal Railway line passing by the municipal pillar on the District Board Toke Road.		
	South—Eastern Bengal Railway line and Boundary Road.		
	West—Boundary Road, Jamir Lambari Road, Brahmapalli Road and a line through station main building joining Brahmapalli and Maharaja Road.		
F	North—Station Road	1	1
	East—A line through station main building joining Brahmapalli Road and Maharaja Road, Brahmapalli Road, Jamir Lambari Road.		
	South—Boundary Road.		
	West—Chandrakanta Ghose's Road, Boundary Road.		

24-Parganas.—No. 240M.—14th January 1935.—In exercise of the power conferred by section 58 (*2*) of the Bengal Municipal Act, 1932 (Bengal Act XV of 1932), the Government of Bengal (Ministry of Local Self-Government) are pleased to appoint Babu Harendra Krishna Mondol, to be a Commissioner of the North Barrackpore Municipality in the district of the 24-Parganas, *vice* Babu Surendra Nath Mukherji, deceased.

Nadia.—No. 242M.—14th January 1935.—It is hereby notified for general information that, under section 62 (*2*) of the Bengal Municipal Act, 1932 (Bengal Act XV of 1932), the Government of Bengal (Ministry of Local Self-Government) direct that Babu Purna Chandra Biswas be removed from his office as a Commissioner of the Kumarkhali Municipality in the district of Nadia.

Nadia.—No. 244M.—14th January 1935.—In exercise of the power conferred by section 58 (*2*) of the Bengal Municipal Act, 1932 (Bengal Act XV of 1932), the Government of Bengal (Ministry of Local Self-Government) are pleased to appoint Babu Nanda Gopal Kundu to be a Commissioner of the Kumarkhali Municipality in the district of Nadia, *vice* Babu Purna Chandra Biswas, removed.

Mymensingh.—No. 246M.—14th January 1935.—In exercise of the power conferred by section 58 (*2*) of the Bengal Municipal Act, 1932 (Bengal Act XV of 1932), the Government of Bengal (Ministry of Local Self-Government) are pleased to appoint Maulvi Mohamed Yashin, to be a Commissioner of the Sherpur Municipality in the district of Mymensingh, *vice* Maulvi Nasiruddin Ahmad, resigned.

24-Parganas.—No. 248M.—14th January 1935.—In exercise of the power conferred by section 16 read with section 18 of the Bengal Municipal Act, 1932 (Bengal Act XV of 1932), the Government of Bengal (Ministry of Local Self-Government) are pleased to appoint the following gentlemen to be Commissioners of the Budge Budge Municipality in the district of the 24-Parganas.

Mr. Malcolm McDonald.

Mr. J. K. MacNab.

Maulvi Muzaffar Hossen Khan.

Maulvi Abdul Latif.

Babu Pran Krishna Paul.

24-Parganas.—No. 250M.—14th January 1935.—In exercise of the power conferred by section 420 of the Bengal Municipal Act, 1932 (Bengal Act XV of 1932), the Government of Bengal (Ministry of Local Self-Government) are pleased to extend the provisions of that section to the South Dum Dum Municipality in the district of the 24-Parganas.

Murshidabad.—No. 252M.—14th January 1935.—In exercise of the power conferred by section 415 of the Bengal Municipal Act, 1932 (Bengal Act XV of 1932), the Government of Bengal (Ministry of Local Self-Government) are pleased to extend the provisions of that section to the Kandi Municipality in the district of Murshidabad.

CORRIGENDUM.

Minister-in-charge: The Hon'ble Sir Bijoy Prasad Singh Roy, Kt.

No. 173L.S.-G.—11th January 1935.—In clause (*2*) of rule 21 of the election rules under the Local Self-Government Act, 1885, published with notification, dated the 15th December 1885. as subsequently amended—*delete* the word "Bengali."

Medical.

Minister-in-charge: The Hon'ble Sir Bijoy Prasad Singh Roy, Kt.

Calcutta.—No. 31Medl.—8th January 1935.—Dr. Jyoti Prosad Mitra, on the expiry of his leave, is placed on supernumerary duty at the Medical College Hospitals, Calcutta.

Mymensingh.—No. 34Medl.—8th January 1935.—Dr. Manindra Nath Mullick, Teacher of Medicine and Materia Medica, Lytton Medical School, Mymensingh, was allowed leave on average pay from the 5th to the 23rd November 1934, under rules 81 (*b*) (*ii*) and 82 (*b*) of the Fundamental Rules.

No. 39Medl. — 9th January 1935. — Dr. Bisweswar Chakravarty, Civil Surgeon, is allowed leave on average pay for four months, on medical certificate, under the proviso to rule 81 (*b*) (*ii*) of the Fundamental Rules, in extension of the leave granted to him in notification No. 2378Medl., dated the 4th August 1934.

CORRIGENDUM.

No. 41Medl.—9th January 1935.—In notification No. 4059Medl., dated the 24th December 1934, regarding election of Dr. Bidhan Chandra Roy, M.D., M.R.C.P., F.R.C.S. (Eng.), as a member of the Bengal Council of Medical Registration, published on page 7 of Part I of the *Calcutta Gazette*, dated the 3rd January 1935, *for* "clause (*d*)" *read* "clause (*c*)."

G. S. DUTT,

Secy. to the Govt. of Bengal.

Public Health.

NOTIFICATIONS.

Minister-in-charge: The Hon'ble Sir Bijoy Prasad Singh Roy, Kt.

Dacca.—No. 4P.H.—2nd January 1935.—Mr. W. J. Berry, M.B.E., A.F.S.I., M.R. SAN. I., Executive Engineer, Dacca Sanitary Works Division, is allowed leave for ten months, viz., leave on average pay for six months and twenty-two days under Fundamental Rule 81 (*b*) (*i*), and leave on half average pay for the remaining period under Fundamental Rule 81 (*d*), with effect from the 5th February 1935, or any subsequent date on which he may avail himself of the leave.

Calcutta-Dacca.—No. 5P.H.—2nd January 1935.—Rai Sahib S. N. Roy, B.E., A.M.I.E. (Ind.), Assistant Engineer, Public Health Department, Bengal, is appointed to act as Executive Engineer, Dacca Sanitary Works Division, during the absence of Mr. W. J. Berry on leave.

Calcutta.—No. 6P.H.—2nd January 1935. —Babu B. R. Bhattacharji, A.M.I.E. (Ind.), is appointed to act as Assistant Engineer, Public Health Department, Bengal, *vice* Rai Sahib S. N. Roy.

H. R. WILKINSON,
Secy. to the Govt. of Bengal.

Orders by the Director of Public Health, Bengal.

No. 100A.—3rd January 1935. — Babu Jogendra Nath Banarji, Assistant Analyst, Bengal Public Health Laboratory, Calcutta, has been granted leave on average pay with effect from the 20th November to the 22nd December 1934, under article 81 (*b*) (*ii*) of the Fundamental Rules.

Notification No. 12983A., dated the 23rd November 1934, is hereby cancelled.

No. 134A.—4th January 1935. — Babu Narendra Krishna Chattarji, Assistant Analyst, Bengal Public Health Laboratory, Calcutta, is allowed extension of leave on average pay with effect from the 23rd December 1934 to the 28th February 1935, under article 81 (*b*) (*ii*) of the Fundamental Rules, in continuation of the leave previously granted to him from the 24th of October 1934.

R. B. KHAMBATA,
Director of Public Health, Bengal.

EDUCATION DEPARTMENT.

NOTIFICATIONS.

Darjeeling.—No. 136Edn. — 14th January 1935. — Mr. C. A. Price, Middle School Teacher, Victoria Boys' School, Kurseong, is appointed to act, until further orders, as Geography Master of the school, with effect from the date of the re-opening of the school after the current winter vacation, or any subsequent date on which he assumes the duties of the post, *vice* Mr. A. R. Greene, on leave.

No. 139Edn. — 14th January 1935. — In exercise of the power conferred by section 6, sub-section (*1*), clause (*c*), and section 10 of the Indian Universities Act, 1904 (VIII of 1904), as amended by the Calcutta University Act, 1921 (VII of 1921), His Excellency the Chancellor of the Calcutta University is pleased to renominate the Hon'ble Mr. Justice Dwarkanath Mitter, M.A., D.L., Sir Z. R. Zahid Suhrawardy, Kt., M.A., B.L., Bar.-at-Law, Mrs. P. K. Ray, M.B.E., and the Hon'ble Rai Pramod Chandra Datta Bahadur, C.I.E., B.L., to be Ordinary Fellows of the University.

No. 142Edn. — 14th January 1935. — In exercise of the power conferred by section 6, sub-section (*1*), clause (*c*), and section 10 of the Indian Universities Act, 1904 (VIII of 1904), as amended by the Calcutta University Act, 1921 (VII of 1921), His Excellency the Chancellor of the Calcutta University is pleased to nominate Dr. Surendra Nath Sen, M.A., PH.D., B.LITT. (Oxon.), Asutosh Professor of Mediæval and Modern Indian History in the University, to be an Ordinary Fellow of the University, with effect from the 13th January 1935.

No. 145Edn. — 14th January 1935. — In exercise of the power conferred by section 6, sub-section (*1*), clause (*c*), and section 10 of the Indian Universities Act, 1904 (VIII of 1904), as amended by the Calcutta University Act, 1921 (VII of 1921), His Excellency the Chancellor of the Calcutta University is pleased to nominate Mr. A. F. Rahman, M.A. (Oxon.), to be an Ordinary Fellow of the University, with effect from the 25th January 1935.

Minister-in-charge: The Hon'ble Khan Bahadur M. Azizul Haque.

24-Parganas. — No. 18Edn.—4th January 1935.—Mr. Jyotirmaya Lahiri, officiating headmaster, Barrackpore Government High School, is appointed to the Bengal Educational Service as headmaster of Government High Schools, with effect from the 21st December 1934, *vice* Babu Harendra Kumar Mazumdar, retired.

Noakhali. — No. 126Edn. — 12th January 1935.—Under rule 7 of the Local Authorities Loans Rules, 1915, as subsequently amended, it is hereby notified for general information that the Government of Bengal (Ministry of Education) intend to sanction the following application from the District School Board of Noakhali for a loan of the total amount of Rs. 18,000 in three annual instalments of Rs. 6,000 from Government, for the work in connection with the administration of the Bengal (Rural) Primary Education Act, 1930 (Bengal Act VII of 1930), bearing interest at 5¼ per cent. per annum and repayable in three annual instalments of Rs. 6,000 *plus* interest, which will be debitable to the District Primary Education Fund, unless good reasons are shown to the contrary within one month from the date of publication of this notification within the district:—

Application from the District School Board, Noakhali, for a loan from Government.

1. The work for which such loan is required.	For work in connection with the administration of the Bengal (Rural) Primary Education Act of 1930.
2. The amount which it is proposed to borrow.	Rs. 18,000.
3. The fund or funds on the security of which it is proposed to borrow.	The District Primary Education Fund, as formed under section 37 of the Bengal (Rural) Primary Education Act, 1930.
4. The law or laws under which the said fund or funds is or are levied, received or held.	The Bengal (Rural) Primary Education Act of 1930 (Bengal Act VII of 1930).
5. The period for which the loan is required.	Three years.
6. The rate of interest at which it is proposed to borrow.	5¼ per cent. per annum.
7. The number of instalments in which it is proposed that the loan would be taken.	Three annual instalments as detailed under item 9.
8. The amount of each instalment.	Rs. 6,000.
9. The date proposed for receiving each instalment.	During 1934-35 on 1st December 1934 or on a subsequent date, during 1935-36, on 1st July 1935, during 1936-37, on 1st July 1936.
10. The number of instalments in which the loan is repayable and the date of payment thereof.	In three instalments, viz., on 1st March 1938, 1st March 1939 and 1st March 1940.
11. The amount of each instalment.	The amount borrowed in December 1934 or on a subsequent date, will be repaid with interest in March 1938, that borrowed in July 1935, in March 1939, and that borrowed in July 1936, in March 1940.
12. Financial position of the District School Board during 1934-35.	*Budget Estimates.* (*a*) Grant from Government for Primary Education—Rs. 1,02,703. (*b*) Contribution of the District Board for the same purpose—Rs. 46,160.
13. Object on which each expenditure is incurred.	For maintenance, construction, repairs, and management of primary schools as well as for making grants to primary schools and for scholarships and stipends for primary schools.

Dinajpur. — No. 130Edn. — 12th January 1935.—Under rule 7 of the Local Authorities Loans Rules, 1915, as subsequently amended, it is hereby notified for general information that the Government of Bengal (Ministry of Education) intend to sanction the following application from the District School Board of Dinajpur for a loan of the total amount of Rs. 16,000 in three annual instalments of Rs. 6,000, Rs. 5,000 and Rs. 5,000 from Government, for the work in connection with the administration of the Bengal (Rural) Primary Education Act, 1930 (Bengal Act VII of 1930), bearing interest at 5¼ per cent. per annum and repayable in three annual instalments of Rs. 6,000, Rs. 5,000 and Rs. 5,000, *plus* interest, which will be debitable to the District Primary Education Fund, unless good reasons are shown to the contrary within one month from the date of publication of this notification within the district:—

Application from the District School Board, Dinajpur, for a loan from Government.

1. The work for which such loan is required.	For work in connection with the administration of the Bengal (Rural) Primary Education Act of 1930.
2. The amount which it is proposed to borrow.	Rs. 16,000.
3. The fund or funds on the security of which it is proposed to borrow.	The District Primary Education Fund, as formed under section 37 of the Bengal (Rural) Primary Education Act, 1930.
4. The law or laws under which the said fund or funds is or are levied, received, or held.	The Bengal (Rural) Primary Education Act of 1930 (Bengal Act VII of 1930).
5. The period for which the loan is required.	Three years.
6. The rate of interest at which it is proposed to borrow.	5¼ per cent. per annum.
7. The number of instalments in which it is proposed that the loan should be taken.	Three annual instalments as detailed under item 9.
8. The amount of each instalment.	Rs. 6,000 for 1934-35, Rs. 5,000 for 1935-36, Rs. 5,000 for 1936-37.
9. The date proposed for receiving each instalment.	During 1934-35 on 1st December 1934 or on a subsequent date, during 1935-36, on 1st July 1935, during 1936-37, on 1st July 1936.
10. The number of instalments in which the loan is repayable and the date of payment thereof.	In three instalments, viz., on 1st March 1938, 1st March 1939, and 1st March 1940.
11. The amount of each instalment.	The amount borrowed in December 1934 or on a subsequent date, will be repaid with interest in March 1938, that borrowed in July 1935, in March 1939, and that borrowed in July 1936, in March 1940.
	Budget Estimates.
12. Financial position of the District School Board during 1934-35.	(*a*) Grant from Government for Primary Education—Rs. 69,585. (*b*) Contribution of the District Board for the same purpose—Rs. 39,261.
13. Object on which each expenditure is incurred.	For expenses in connection with the administration of primary schools.

Mymensingh.—No. 110Edn.—12th January 1935.—Under rule 7 of the Local Authorities Loans Rules, 1915, as subsequently amended, it is hereby notified for general information that the Government of Bengal (Ministry of Education) intend to sanction the following application from the District School Board of Mymensingh for a loan of the total amount of Rs. 22,500 in three annual instalments of Rs. 7,500 from Government, for the work in connection with the administration of the Bengal (Rural) Primary Education Act, 1930 (Bengal Act VII of 1930), bearing interest at 5¼ per cent. per annum and repayable in three annual instalments of Rs. 7,500 *plus* interest, which will be debitable to the District Primary Education Fund, unless good reasons are shown to the contrary within one month from the date of publication of this notification within the district:—

Application from the District School Board, Mymensingh, for a loan from Government.

1. The work for which such loan is required.	For work in connection with the administration of the Bengal (Rural) Primary Education Act of 1930.
2. The amount which it is proposed to borrow.	Rs. 22,500.
3. The fund or funds on the security of which it is proposed to borrow.	The District Primary Education Fund, as formed under section 37 of the Bengal (Rural) Primary Education Act, 1930.
4. The law or laws under which the said fund or funds is or are levied, received or held.	The Bengal (Rural) Primary Education Act of 1930 (Bengal Act VII of 1930).
5. The period for which the loan is required.	Three years.
6. The rate of interest at which it is proposed to borrow.	5¼ per cent. per annum.
7. The number of instalments in which it is proposed that the loan should be taken.	Three annual instalments as detailed under item 9.
8. The amount of each instalment.	Rs. 7,500.
9. The date proposed for receiving each instalment.	During 1934-35 on 1st December 1934 or on a subsequent date, during 1935-36 on 1st July 1935, during 1936-37 on 1st July 1936.
10. The number of instalments in which the loan is repayable and the date of payment thereof.	In three instalments, viz., on 1st March 1938, 1st March 1939 and 1st March 1940.
11. The amount of each instalment.	The amount borrowed in December 1934 or on a subsequent date, will be repaid with interest in March 1938, that borrowed in July 1935 in March 1939, and that borrowed in July 1936 in March 1940.
12. Financial position of the District School Board during 1934-35.	*Budget Estimates.* (*a*) Grant from Government for Primary Education—Rs. 1,74, 926. (*b*) Contribution of the District Board for the same purpose—Rs. 76,356.
13. Object on which each expenditure is incurred.	For maintenance, construction, repairs and management of primary schools as well as for making grants to primary schools and for scholarships and stipends for primary schools.

Birbhum. — No. 106Edn.—12th January 1935.—Under rule 7 of the Local Authorities Loans Rules, 1915, as subsequently amended, it is hereby notified for general information that the Government of Bengal (Ministry of Education) intend to sanction the following application from the District School Board of Birbhum for a loan of the total amount of Rs. 12,600 in three annual instalments of Rs. 4,200 from Government, for the work in connection with the administration of the Bengal (Rural) Primary Education Act, 1930 (Bengal Act VII of 1930), bearing interest at 5¼ per cent. per annum and repayable in three annual instalments of Rs. 4,200 *plus* interest, which will be debitable to the District Primary Education Fund, unless good reasons are shown to the contrary within one month from the date of publication of this notification within the district:—

Application from the District School Board, Birbhum, for a loan from Government.

1. The work for which such loan is required.	For work in connection with the administration of the Bengal (Rural) Primary Education Act of 1930.
2. The amount which it is proposed to borrow.	Rs. 12,600.
3. The fund or funds on the security of which it is proposed to borrow.	The District Primary Education Fund, as formed under section 37 of the Bengal (Rural) Primary Education Act, 1930.
4. The law or laws under which the said fund or funds is or are levied, received or held.	The Bengal (Rural) Primary Education Act of 1930 (Bengal Act VII of 1930).
5. The period for which the loan is required.	Three years.
6. The rate of interest at which it is proposed to borrow.	5¼ per cent. per annum.
7. The number of instalments in which it is proposed that the loan should be taken.	Three annual instalments as detailed under item 9.
8. The amount of each instalment.	Rs. 4,200.
9. The date proposed for receiving each instalment.	During 1934-35 on 1st December 1934 or on a subsequent date, during 1935-36 on 1st July 1935, during 1936-37 on 1st July 1936.
10. The number of instalments in which the loan is repayable and the date of payment thereof.	In three instalments, viz., on 1st March 1938, 1st March 1939 and 1st March 1940.
11. The amount of each instalment.	The amount borrowed in December 1934 or on a subsequent date, will be repaid with interest in March 1938, that borrowed in July 1935 in March 1939, and that borrowed in July 1936 in March 1940.
	Budget Estimates.
12. Financial position of the District School Board during 1934-35.	(*a*) Grant from Government for Primary Education—Rs. 61,383. (*b*) Contribution of the District Board for the same purpose—Rs. 11,146.
13. Object on which each expenditure is incurred.	For maintenance, construction, repairs and management of primary schools as well as for making grants to primary schools and for scholarships and stipends for primary schools.

Chittagong.—No. 114Edn.—12th January 1935.—Under rule 7 of the Local Authorities Loans Rules, 1915, as subsequently amended, it is hereby notified for general information that the Government of Bengal (Ministry of Education) intend to sanction the following application from the District School Board of Chittagong for a loan of the total amount of Rs. 16,500 in three annual instalments of Rs. 5,500 from Government, for the work in connection with the administration of the Bengal (Rural) Primary Education Act, 1930 (Bengal Act VII of 1930), bearing interest at 5¼ per cent. per annum and repayable in three annual instalments of Rs. 5,500 *plus* interest, which will be debitable to the District Primary Education Fund, unless good reasons are shown to the contrary within one month from the date of publication of this notification within the district:—

Application from the District School Board, Chittagong, for a loan from Government.

1. The work for which such loan is required.	For work in connection with the administration of the Bengal (Rural) Primary Education Act of 1930.
2. The amount which it is proposed to borrow.	Rs. 16,500.
3. The fund or funds on the security of which it is proposed to borrow.	The District Primary Education Fund, as formed under section 37 of the Bengal (Rural) Primary Education Act, 1930.
4. The law or laws under which the said fund or funds is or are levied, received or held.	The Bengal (Rural) Primary Education Act of 1930 (Bengal Act VII of 1930).
5. The period for which the loan is required.	Three years.
6. The rate of interest at which it is proposed to borrow.	5¼ per cent. per annum.
7. The number of instalments in which it is proposed that the loan should be taken.	Three annual instalments as detailed under item 9.
8. The amount of each instalment.	Rs. 5,500.
9. The date proposed for receiving each instalment.	During 1934-35 on 1st December 1934 or on a subsequent date, during 1935-36, on 1st July 1935, during 1936-37, on 1st July 1936.
10. The number of instalments in which the loan is repayable and the date of payment thereof.	In three instalments, viz., on 1st March 1938, 1st March 1939 and 1st March 1940.
11. The amount of each instalment.	The amount borrowed in December 1934 or on a subsequent date, will be repaid with interest in March 1938, that borrowed in July 1935 in March 1939, and that borrowed in July 1936 in March 1940.
12. Financial position of the District School Board during 1934-35.	*Budget Estimates.* (*a*) Grant from Government for primary education—Rs. 1,19,592. (*b*) Contribution of the district board for the same purpose—Rs. 46,512.
13. Object on which each expenditure is incurred.	For maintenance, construction, repairs and management of primary schools as well as for making grants to primary schools and for scholarships and stipends for primary schools.

Pabna.—No. 118Edn.—12th January 1935.—Under rule 7 of the Local Authorities Loans Rules, 1915, as subsequently amended, it is hereby notified for general information that the Government of Bengal (Ministry of Education) intend to sanction the following application from the District School Board of Pabna for a loan of the total amount of Rs. 16,500 in three annual instalments of Rs. 5,500 from Government, for the work in connection with the administration of the Bengal (Rural) Primary Education Act, 1930 (Bengal Act VII of 1930), bearing interest at 5¼ per cent. per annum and repayable in three annual instalments of Rs. 5,500 *plus* interest, which will be debitable to the District Primary Education Fund, unless good reasons are shown to the contrary within one month from the date of publication of this notification within the district:—

Application from the District School Board, Pabna, for a loan from Government.

1. The work for which such loan is required.	For work in connection with the administration of the Bengal (Rural) Primary Education Act of 1930.
2. The amount which it is proposed to borrow.	Rs. 16,500.
3. The fund or funds on the security of which it is proposed to borrow.	The District Primary Education Fund, as formed under section 37 of the Bengal (Rural) Primary Education Act, 1930.
4. The law or laws under which the said fund or funds is or are levied, received or held.	The Bengal (Rural) Primary Education Act of 1930 (Bengal Act VII of 1930).
5. The period for which the loan is required.	Three years.
6. The rate of interest at which it is proposed to borrow.	5¼ per cent. per annum.
7. The number of instalments in which it is proposed that the loan should be taken.	Three annual instalments as detailed under item 9.
8. The amount of each instalment.	Rs. 5,500.
9. The date proposed for receiving each instalment.	During 1934-35 on 1st December 1934 or on a subsequent date, during 1935-36 on 1st July 1935, during 1936-37 on 1st July 1936.
10. The number of instalments in which the loan is repayable and the date of payment thereof.	In three instalments, viz., on 1st March 1938, 1st March 1939 and 1st March 1940.
11. The amount of each instalment.	The amount borrowed in December 1934 or on a subsequent date, will be repaid with interest in March 1938, that borrowed in July 1935 in March 1939, and that borrowed in July 1936 in March 1940.
12. Financial position of the District School Board during 1934-35.	*Budget Estimates.* (*a*) Grant from Government for primary education—Rs. 55,101. (*b*) Contribution of the district board for the same purpose—Rs. 30,624.
13. Object on which each expenditure is incurred.	For maintenance, construction, repairs and management of primary schools as well as for making grants to primary schools and for scholarships and stipends for primary schools.

Bogra.—No. 122Edn.—12th January 1935.—Under rule 7 of the Local Authorities Loans Rules, 1915, as subsequently amended, it is hereby notified for general information that the Government of Bengal (Ministry of Education) intend to sanction the following application from the District School Board of Bogra for a loan of the total amount of Rs. 13,500 in three annual instalments of Rs. 4,500 from Government, for the work in connection with the administration of the Bengal (Rural) Primary Education Act, 1930 (Bengal Act VII of 1930), bearing interest at 5¼ per cent. per annum and repayable in three annual instalments of Rs. 4,500 *plus* interest, which will be debitable to the District Primary Education Fund, unless good reasons are shown to the contrary within one month from the date of publication of this notification within the district:—

Application from the District School Board, Bogra, for a loan from Government.

1. The work for which such loan is required.	For work in connection with the administration of the Bengal (Rural) Primary Education Act of 1930.
2. The amount which it is proposed to borrow.	Rs. 13,500.
3. The fund or funds on the security of which it is proposed to borrow.	The District Primary Education Fund, as formed under section 37 of the Bengal (Rural) Primary Education Act, 1930.
4. The law or laws under which the said fund or funds is or are levied, received or held.	The Bengal (Rural) Primary Education Act of 1930 (Bengal Act VII of 1930).
5. The period for which the loan is required.	Three years.
6. The rate of interest at which it is proposed to borrow.	5¼ per cent. per annum.
7. The number of instalments in which it is proposed that the loan should be taken.	Three annual instalments as detailed under item 9.
8. The amount of each instalment.	Rs. 4,500.
9. The date proposed for receiving each instalment.	During 1934-35 on 1st December 1934 or on a subsequent date, during 1935-36 on 1st July 1935, during 1936-37 on 1st July 1936.
10. The number of instalments in which the loan is repayable and the date of payment thereof.	In three instalments, viz., on 1st March 1938, 1st March 1939 and 1st March 1940.
11. The amount of each instalment.	The amount borrowed in December 1934 or on a subsequent date, will be repaid with interest in March 1938, that borrowed in July 1935 in March 1939, and that borrowed in July 1936 in March 1940.
12. Financial position of the District School Board during 1934-35.	*Budget Estimates.* (*a*) Grant from Government for primary education—Rs. 61,912. (*b*) Contribution of the district board for the same purpose—Rs. 18,000
13. Object on which each expenditure is incurred.	For maintenance, construction, repairs and management of primary schools as well as for making grants to primary schools and for scholarships and stipends for primary schools.

No. 148Edn.—14th January 1935.—In exercise of the power conferred by clause (*k*) of sub-section (2) of section 66 of the Bengal (Rural) Primary Education Act, 1930 (Bengal Act VII of 1930), the Government of Bengal (Ministry of Education) are pleased to make the following rules regarding the amount and manner of payment of travelling allowances under section 13 of the said Act:—

Rules under section 66 (2) (k) of the Bengal (Rural) Primary Education Act, 1930, regarding the amount and manner of payment of travelling allowance to members other than ex-officio *members who are Government servants and the establishment of the District School Board under section 13.*

1. In these rules "members" means members of the District School Board, other than *ex-officio* members who are Government officers.

2. The members and the officers and menial servants of a Board shall be entitled to one and half fares each way when travelling by rail, public motor launch or steamer to meet the expense incurred by them in attending meetings of the Board or in performing any duty assigned to them by the Board.

3. The members and the officers and menial servants of the Board when travelling by rail or by sea or river in a public motor launch or steamer shall be entitled to the following accommodation:—

(*i*) *Presidents and Vice-Presidents of the Boards or members who are Chairmen or Vice-Chairmen of District Boards.*—Accommodation of the highest class, by whatever name it might be called.

(*ii*) *Other members.*—Second, or, if the line by which he travels provides no second class accommodation, highest class.

(*iii*) *Officers of the Board.*—The same accommodation as Government servants of the third grade.

(*iv*) *Menial servants.*—Lowest class.

4. The members and the officers and menial servants of the Board when travelling by road or by sea or river in any vessel other than a public motor launch or steamer shall be entitled to mileage allowance as follows:—

(*i*) *Presidents and Vice-Presidents of the Boards or members who are Chairmen and Vice-Chairmen of District Boards.*—Eight annas per mile, but if the journey be by motor car, six annas per mile for the first twenty miles and thereafter at half the full rates.

(*ii*) *Other members.*—Four annas per mile.

(*iii*) *Officers of the Board.*—Two annas per mile.

(*iv*) *Menial servants.*—One anna per mile.

5. In the case of halt, every member shall be entitled to a daily allowance of Rs. 4 per diem. Every officer of the Board shall be entitled to a daily allowance of 2½ annas for every Rs. 12½ or fraction of Rs. 12½ of his pay subject to a minimum of annas five. Every menial servant shall be entitled to a daily allowance of annas three per diem.

In each of the above cases the daily allowance will be subject to a maximum of twelve days in a year.

No daily allowance shall be paid for days on which a member or an officer of the Board travels.

6. No member and no officer of the Board ordinarily living within a radius of 5 miles from the district headquarters shall be entitled to the allowance admissible under the preceding rules.

7. Menial servants of the Board travelling by rail or public motor launch or steamer shall be entitled to a single fare of the lowest class in addition to a daily allowance of annas three only if he travels by rail and annas six only if he travels by rail and public motor launch or steamer or public motor launch or steamer only.

8. Travelling allowance shall be drawn on a bill in District Board Form No. 32 for members and in Form No. 33 for the officers and menial servants of the Board. Every travelling allowance bill shall be countersigned by the President who shall be regarded as the controlling officer for the countersignature of such bills.

9. In the preparation of travelling allowance bills the following instructions shall be observed:—

(*a*) Only one kind of allowance shall be entered on one line, each halt or journey or portion of journey having a line to itself.

(*b*) Hours of journey shall be mentioned only (1) when, for an absence from headquarters of not more than two consecutive days, daily allowance is claimed for two days, (2) when mileage is claimed, (3) when both railway or steamer fare and daily allowance are claimed in respect of a journey by rail or steamer immediately preceded or followed by a journey by road or by a halt.

(*c*) The number of miles travelled shall be entered in all cases of journeys by road or by boat.

(*d*) A fraction of a mile in the total of each journey for each person shall not be charged for.

(*e*) When the first item of travelling allowance to any member or any officer or menial servant of the Board is a halt, the date of commencement of that halt shall be stated in the remarks column.

Registration.

NOTIFICATIONS.

Minister-in-charge: The Hon'ble Khan Bahadur M. Azizul Haque.

Khulna.—No. 39Regn.—5th January 1935.—In exercise of the power conferred by section 3 of the Bengal Muhammadan Marriages and Divorces Registration Act, 1876 (Bengal Act I of 1876), the Government of Bengal (Ministry of Education) are pleased to appoint Maulvi Kazi Muhammad Safiullah Khan to be a Muhammadan Registrar within the police-station of Tala, in the district of Khulna.

Khulna.—No. 40Regn.—5th January 1935.—In exercise of the power conferred by section 2 of the Kazis' Act, 1880 (Act XII of 1880), the Government of Bengal (Ministry of Education) are pleased to appoint Maulvi Kazi Muhammad Safiullah Khan to be the Kazi for the celebration of marriages and the performance of other rites and ceremonies within the police-station of Tala, in the district of Khulna.

Malda.—No. 45Regn.—5th January 1935.—In exercise of the power conferred by section 3 of the Bengal Muhammadan Marriages and Divorces Registration Act, 1876 (Bengal Act I of 1876), the Government of Bengal (Ministry of Education) are pleased to appoint Maulvi Abul Bashar to be a Muhammadan Registrar within the police-stations of Malda, Bholahat and English Bazar, in the district of Malda.

Malda.—No. 46Regn.—5th January 1935.—In exercise of the power conferred by section 2 of the Kazis' Act, 1880 (Act XII of 1880), the Government of Bengal (Ministry of Education) are pleased to appoint Maulvi Abul Bashar to be the Kazi for the celebration of marriages and the performance of other rites and ceremonies within the police-stations of Malda, Bholahat and English Bazar, in the district of Malda.

Jessore.—No. 51Regn.—5th January 1935.—In exercise of the power conferred by section 3 of the Bengal Muhammadan Marriages and Divorces Registration Act, 1876 (Bengal Act I of 1876), the Government of Bengal (Ministry of Education) are pleased to appoint Maulvi Muhammad Muzammel Hossain Alquaderi to be a Muhammadan Registrar within the police-station of Moheshpur, in the district of Jessore.

Jessore.—No. 52Regn.—5th January 1935.—In exercise of the power conferred by section 2 of the Kazis' Act, 1880 (Act XII of 1880), the Government of Bengal (Ministry of Education) are pleased to appoint Maulvi Muhammad Muzammel Hossain Alquaderi to be the Kazi for the celebration of marriages and the performance of other rites and ceremonies within the police-station of Moheshpur, in the district of Jessore.

No. 57Regn.—12th January 1935.—Maulvi Nurul Haq, a District Sub-Registrar, is allowed leave on average pay up to the 31st January 1935, under rule 81(*b*)(*ii*) of the Fundamental Rules, in extension of the leave already granted to him.

Tippera. — No. 60Regn. — 14th January 1935.—In exercise of the power conferred by section 3 of the Bengal Muhammadan Marriages and Divorces Registration Act, 1876 (Bengal Act 1 of 1876), the Government of Bengal (Ministry of Education) are pleased to appoint Maulvi A. K. Waliullah temporarily to be a Muhammadan Registrar within the police-station of Faridganj, in the district of Tippera, during the absence, on leave, of Maulvi Habibullah, or until further orders.

Tippera. — No. 61Regn. — 14th January 1935.—In exercise of the power conferred by section 2 of the Kazis' Act, 1880 (Act XII of 1880), the Government of Bengal (Ministry of Education) are pleased to appoint Maulvi A. K. Waliullah temporarily to be the Kazi for the celebration of marriages and the performance of other rites and ceremonies within the police-station of Faridganj, in the district of Tippera, during the absence, on leave, of Maulvi Habibullah, or until further orders.

H. R. WILKINSON,
Secy. to the Govt. of Bengal.

Orders by the Director of Public Instruction, Bengal.

Tippera.—No. 82B.—18th December 1934.—Babu Dwijendra Nath Dutta Chaudhury, District Inspector of Schools, Tippera, in the Bengal Educational Service, is granted, under Fundamental Rule 81 (*b*) (*ii*), leave on average pay for thirty days, with effect from the 2nd January 1935.

2. He is permitted to prefix to his leave the ensuing Christmas and the New Year's Day holidays extending from the 23rd December 1934 to the 1st January 1935, provided the conditions prescribed in Subsidiary Rules 206 to 208 are fulfilled.

Rajshahi.—No. 83B.—19th December 1934.—Babu Krishnadhan Banerji, Professor of History and officiating Vice-Principal, Rajshahi College, in the Bengal Educational Service, is declared to have been on leave on average pay, on medical certificate, for the period from the 19th to 24th November 1934, under the proviso to Fundamental Rule 81 (*b*) (*ii*).

2. He was permitted to prefix to his leave Sunday, the 18th, and to suffix to it Sunday, the 25th November 1934, provided the conditions prescribed in Subsidiary Rules 206 to 208 were fulfilled.

J. M. BOTTOMLEY,
Director of Public Instrn., Bengal.

Orders by the Inspector-General of Registration, Bengal.

Jessore. — No. 1. — 3rd January 1935.—Maulvi K. M. Abdul Hoque, Sub-Registrar of Lakshmipasa, in the district of Jessore, is allowed leave on average pay for one month and twenty days, under rule 81 (*b*) (*ii*) of the Fundamental Rules, in extension of the leave granted to him in this department notification No. 571, dated the 28th November 1934.

Howrah - Burdwan.—No. 2.—3rd January 1935.—Babu Nripendra Nath Basu, Sub-Registrar of Bargachia, in the district of Howrah, under orders of transfer to Khandaghosh, in the district of Burdwan, is allowed leave on average pay for two months, under rule 81 (*b*) (*ii*) of the Fundamental Rules, in extension of the leave granted to him in this department notification No. 446, dated the 24th September 1934.

Bogra.—No. 3.—4th January 1935.—Maulvi Sakhawat Ali, Sadar 2nd Joint Sub-Registrar of Bogra, is allowed leave on average pay for three weeks, under rule 81 (*b*) (*ii*) of the Fundamental Rules, with effect from the 2nd January 1935.

Faridpur - Bogra. — No. 4.—4th January 1935.—Babu Rathindra Nath Biswas, Sub-Registrar attached to Faridpur, is appointed to act as Sadar 2nd Joint Sub-Registrar of Bogra with effect from the date on which he joins the appointment, during the absence, on leave, of Maulvi Sakhawat Ali, or until further orders.

Mymensingh-Rangpur.—No. 5.—5th January 1935. — Babu Abala Kanta Bhaduri, Sub-Registrar attached to Mymensingh, now officiating Sub-Registrar of Sarisabari in the same district, while officiating at Palashbari, in the district of Rangpur, was on leave on average pay for one month and eight days, under rule 81 (*b*) (*ii*) of the Fundamental Rules, from the 24th October 1934 to the 1st December 1934 (both the days inclusive).

This cancels this department notification No. 529, dated the 3rd November 1934, granting leave on average pay for two months to the Sub-Registrar.

Rangpur.—No. 6. — 5th January 1935. — Babu Nirmal Chandra Mazumdar, Sub-Registrar of Gaibandha, in the district of Rangpur, is allowed leave on average pay for two months, under rule 81 (*b*) (*ii*) of the Fundamental Rules, with effect from the date on which he may be relieved.

S. AHMED,
Inspector-General of Regn., Bengal.

COMMERCE DEPARTMENT.

NOTIFICATION.

No. 297Com.—14th January 1935.—In exercise of the power conferred by section 26 of the Provident Insurance Societies Act, 1912 (V of 1912), the Governor in Council is pleased to exempt the Port Canning Companies Office Provident Fund from the provisions of section 3 of the said Act.

D. GLADDING,
Secy. to the Govt. of Bengal.

FINANCE DEPARTMENT.

Audit.

No. 199F.—12th January 1935.—The following corrections, which have been authorised, are published for general information:—

CORRIGENDA.

The Fundamental and Subsidiary Rules, 1st Edition (Reprint), 1929.

Page 289—Appendix No. 16.—The following shall be inserted as item 3 (*i*) under "Education":—

(*i*) *Government servants deputed to a course of training at a Boy Scouts' Training Camp.*—Travelling allowance limited to the actual return fares for rail or steamer journeys by the class to which his grade entitles him and to road mileage admissible on tour to and from the training centre provided that the previous sanction of Government to the deputation has been obtained.

Bengal Financial Rules, 1st Edition (Reprint), 1930.

Page 26—Rule 47.—Substitute the following for the last sentence of the amendment issued with correction slip No. 234, dated the 2nd January 1934:—

"The tenant should be required to pay in the rent on the 1st working day of the month for which the rent is due."

Page 265—F. R. Appx. 15 as inserted by correction slip No. 293, dated 24th May 1933.—

Clause (*b*).—For the existing entry—

"Pension cases (after retirement)—5."

Substitute the following:—

"Cases in which invalid pensions have been sanctioned—25

Other pension cases—5 after retirement."

Page 184—F. R. Appx. 4 as amended by correction slip No. 245, dated 17th April 1934.—Rule III—

(*i*) *Insert* the following as sub-rule 3:—

"The supply by a service department of residential accommodation to the employees of a commercial department or *vice versa* should not, for the purpose of this rule as well as rule II above, be held to constitute a service rendered. The rent charged for residential accommodation will thus in all cases be the rent recoverable under the Fundamental Rules from the persons actually accommodated."

(*ii*) *Cancel* the note to sub-rule 2.

(*iii*) *Delete* the words "and the similar rule.....thereunder" occurring at the end of the exception to sub-rule 2.

NOTIFICATION.

No. 104F.—5th January 1935.—In exercise of the powers conferred by rules 41, 42 and 44 of the Civil Services (Classification, Control and Appeal) Rules, with the previous sanction of the Governor-General in Council as required by rule 11 of those rules, and with the previous sanction of the Secretary of State in Council in pursuance of rule 9 of those rules, the Governor in Council and acting with his Ministers hereby makes the following rules in supersession, subject to any express saving provisions contained in the rules made herewith, of the existing rules regulating the General Provident Fund in their application to persons whose conditions of service are determinable by the Local Government, namely:—

The General Provident Fund (Bengal Services) Rules.

Short Title and Definitions.

1. (*a*) These rules may be called the General Provident Fund (Bengal Services) Rules.

(*b*) They shall come into force with effect from the 1st January 1935.

2. (1) In these rules:—

(*a*) *Account Officer* means the Accountant-General, Bengal.

(*b*) Except where otherwise expressly provided *emoluments* means pay, leave salary or subsistence grant as defined in the Fundamental Rules, and includes sterling overseas pay converted at such rate of exchange as the Secretary of State in Council may prescribe in this behalf and any remuneration of the nature of pay received in respect of foreign service.

(*c*) Family means—

(*i*) in the case of a male subscriber, the wife or wives and children of a subscriber, and the widow, or widows, and children of a deceased son of the subscriber. Provided that, if a subscriber proves that his wife has been judicially separated from him or has ceased under the customary law of the community to which she belongs to be entitled to maintenance, she shall thenceforth be deemed to be no longer a member of the subscriber's family in matters to which these rules relate, unless the subscriber subsequently indicates by express notification in writing to the Account Officer that she shall continue to be so regarded;

(*ii*) in the case of a female subscriber, the husband and children of a subscriber, and the widow or widows and children of a deceased son of a subscriber:

Provided that if a subscriber by notification in writing to the Account Officer expresses her desire to exclude her husband from her family, the husband shall thenceforth be deemed to be no longer a member of the subscriber's family in matters to which these rules relate, unless the subscriber subsequently cancels formally in writing her notification excluding him.

Note.—An adopted child shall be considered to be a child when the Account Officer, or if any doubt arises in the mind of the Account Officer, the Solicitor to the Government of Bengal is satisfied that under the personal law of the subscriber, adoption is legally recognised as conferring the status of a natural child, but in this case only.

(*d*) *Fund* means the General Provident Fund.

(*e*) *Leave* means any variety of leave recognised by the Fundamental Rules or the Civil Service Regulations, or the Bengal Services (Revision of Leave) Rules.

(*f*) *Year* means a financial year.

(2) Any other expression used in these Rules which is defined either in the Provident Funds Act* (XIX of 1925) or in the Fundamental Rules is used in the sense therein defined.

(3) Nothing in these rules shall be deemed to have the effect of terminating the existence of the General Provident Fund as heretofore existing or of constituting any new Fund.

Constitution of the Fund.

3. The Fund shall be maintained in India in rupees.

4. All Government servants in such permanent pensionable and non-pensionable service (including probationary service) as is classed as superior within the meaning of the rules regulating such service, whose conditions of service are determinable by the Local Government, shall be eligible to join the Fund.

Provided that no such servant as has been required or permitted to subscribe to a contributory provident fund shall be eligible to join or continue as a subscriber to the Fund, while he retains his right to subscribe to such a fund.

Provided further that any Government servant not qualified for membership under this rule who has been duly admitted to membership under rules† or orders heretofore in force shall continue to be a member and to be governed by any special provisions relating to obligation for, and rates of, subscription contained in those rules or orders for so long as his conditions of service continue to be determined by the Local Government.

5. [*Omitted.*]

* Appendix A.
† Appendix C.

6. (1) All Europeans and Anglo-Indians* in permanent civil employ who entered the service of Government on or after the 1st August 1909, shall, on attaining a substantive pay of Rs. 100† a month, join the Fund.

(2) All other eligible Government servants may elect to join the Fund.

7. (*i*) A Government servant who exercises the option allowed by rule 6 (2) may discontinue subscribing to the Fund at any time, but his right of renewing subscription shall lapse if he discontinues subscribing, except when on leave, more than three times.

(*ii*) If a subscriber is reduced to the position of an inferior servant, he shall cease to subscribe to the Fund till he is reinstated in superior service.

(*iii*) If a Government servant's right to resume subscription lapses under sub-rule (*i*) of this rule or if he ceases to subscribe under sub-rule (*ii*) he shall nevertheless retain his other rights and liabilities as a subscriber to the Fund; and no final withdrawal of his deposits shall be allowed except on the happening of one or other of the contingencies provided for in rules 29, 30 and 31.

Nominations.

8. (1) The Account Officer shall, as soon as may be after a subscriber joins the Fund, require him to make a nomination conferring the right to receive the amount that may stand to his credit in the Fund in the event of his death before the amount standing to his credit has become payable, or where the amount has become payable, before payment has been made.

(2) A subscriber who, at the time of joining the Fund, has a family shall send to the Account Officer a nomination in the Form set forth in the First Schedule in favour of one or more members of his family.

(3) A subscriber who has no family shall similarly nominate a person or persons in the Form set forth in the Second Schedule:

Provided that a nomination made under this sub-rule shall be deemed to have been duly made in accordance with these rules only for so long as the subscriber has no family.

(4) If a subscriber at any time acquires a family he shall send to the Account Officer a nomination as provided in sub-rule (2), and, if he has under sub-rule (3) nominated any person other than a member of his family, he shall formally cancel the previous nomination.

(5) A subscriber may in his nomination distribute the amount that may stand to his credit in the Fund amongst his nominees at his own discretion.

(6) A nomination may be cancelled by a subscriber and replaced by any nomination which is permitted to be made under this rule.

(7) A nomination shall take effect to the extent that it is valid on the date on which it is received by the Account Officer.

* This term means a person of mixed European and Asiatic descent.

† Executive authorities should inform the Account Officer concerned as soon as any Government servant becomes liable to subscribe.

(8) Nothing in this rule shall be deemed to invalidate, or to require the replacement by a nomination thereunder of, a nomination made before these rules came into force under the corresponding rule heretofore in force.

Subscribers' Accounts.

9. An account shall be prepared in the name of each subscriber and shall show the amount of his subscriptions with interest thereon calculated as prescribed in sub-rule (2) of rule 14.

Conditions and Rates of Subscriptions.

10. (1) Except as provided in rule 7, a subscriber shall subscribe monthly to the Fund except during a period of suspension:

Provided that a subscriber may, at his option, elect not to subscribe during leave:

Provided further that a subscriber on reinstatement after a period passed under suspension shall be allowed the option of paying in one sum, or in instalments, any sum not exceeding the maximum amount of arrear subscriptions permissible for that period.

(2) The option of a subscriber shall be intimated to the Account Officer before the subscriber proceeds on leave or if his leave is sanctioned retrospectively, as soon thereafter as possible and shall be final. Failure to make due and timely intimation shall be deemed to constitute an election to subscribe.

11. (1) The amount of subscription shall be fixed by the subscriber himself, subject to the following conditions:—

(*a*) It shall be expressed in whole rupees.

(*b*) It may be any sum, so expressed, not less than 6¼ per cent. of his emoluments (*i.e.*, one anna in the rupee) and not more than 15½ per cent. (*i.e.*, 2½ annas in the rupee).

(2) For the purposes of sub-rule (1) the emoluments of a subscriber shall be—

(*a*) in the case of a subscriber who was in Government service on the 31st March of the preceding year, the emoluments to which he was entitled on that date: provided as follows—

(*i*) if the subscriber was on leave on the said date and elected not to subscribe during such leave or was under suspension on the said date, his emoluments shall be the emoluments to which he was entitled on the first day after his return to duty;

(*ii*) if the subscriber was on deputation out of India on the said date or was on leave on the said date and continues to be on leave and has elected to subscribe during such leave his emoluments shall be the emoluments to which he would have been entitled had he been on duty in India;

(*iii*) if the subscriber joined the Fund for the first time under the operation of rule 6 on a day subsequent to the said date, his emoluments shall be the emoluments to which he was entitled on such subsequent date.

(*b*) in the case of a subscriber who was not in Government service on the 31st March of the preceding year, the emoluments to which he was entitled on the first day of his service or, if he joined the Fund for the first time under the operation of rule 6 on a date subsequent to the first day of his service, the emoluments to which he was entitled on such subsequent date.

(3) The subscriber shall intimate the fixation of the amount of his monthly subscription in each year in the following manner:—

(*a*) if he was on duty on the 31st March of the preceding year, by the deduction which he makes in this behalf from his pay bill for that month;

(*b*) if he was on leave on the 31st March of the preceding year and elected not to subscribe during such leave, or was under suspension on that date, by the deduction which he makes in this behalf from his first pay bill after his return to duty;

(*c*) if he has entered Government service for the first time during the year, or if he is compulsorily required to join the Fund from a particular date under rule 6, by the deduction which he makes in this behalf, from his pay bill for the month during which he joins the Fund;

(*d*) if he was on leave on the 31st March of the preceding year, and continues to be on leave and has elected to subscribe during such leave, by the deduction which he causes to be made in this behalf from his salary bill for that month by written intimation to the Account Officer;

(*e*) if he was on foreign service on the 31st March of the preceding year, by written communication to the Account Officer before the 1st April of the current year.

(4) If the amount of subscription payable contains a fraction of a rupee, it shall be rounded to the nearest whole rupee (eight annas counting as the next higher rupee).

(5) The amount of subscription so fixed shall remain unchanged throughout the year:

Provided that if a subscriber is on duty for a part of a month and on leave for the remainder of that month and if he has elected not to subscribe during leave, the amount of the subscription payable shall be proportionate to the number of days spent on duty in the month.

12. When a subscriber is transferred to foreign service or sent on deputation out of India, he shall remain subject to the rules of the Fund in the same manner as if he were not so transferred or sent on deputation.

Realisation of subscriptions.

13. (1) When emoluments are drawn from a Government treasury in India or from the Home or a Colonial treasury, recovery of subscriptions on account of these emoluments and of the principal and interest of advances shall be made from the emoluments themselves; except that, when emoluments other than sterling overseas pay are so drawn in India, deductions in respect of sterling overseas pay, when admissible, shall be made in India.

(2) When emoluments are drawn from any other source the subscriber shall forward his dues monthly to the Account Officer.

(3) If a Government servant fails to subscribe with effect from the date on which he is required to join the Fund under rule 6, the total amount due to the Fund on account of arrears of subscription shall, with interest thereon at the rate provided in rule 14, forthwith be paid by the subscriber to the Fund, or in default be ordered by the Account Officer to be recovered by deduction from the emoluments of the subscriber by instalments or otherwise, as the Local Government may direct.

Interest.

14. (1) Subject to the provisions of sub-rule (5) below, Government shall pay to the credit of the account of a subscriber interest at such rate as may be determined for each year according to the method of calculation prescribed from time to time by the Government of India.

Provided that, if the rate of interest determined for a year is less than 4 per cent., all existing subscribers to the Fund in the year preceding that for which the rate has for the first time been fixed at less than 4 per cent. shall be allowed interest at 4 per cent.

(2) Interest shall be credited with effect from the last day in each year in the following manner:—

(*i*) on the amount at the credit of a subscriber on the last day of the preceding year, less any sums withdrawn during the current year—interest for twelve months;

(*ii*) on sums withdrawn during the current year—interest from the beginning of the curent year up to the last day of the month preceding the month of withdrawal;

(*iii*) on all sums credited to the subscriber's account after the last day of the preceding year—interest from the date of deposit up to the end of the current year;

(*iv*) the total amount of interest shall be rounded to the nearest rupee in the manner provided in rule 11 (4):

Provided that when the amount standing at the credit of a subscriber has become payable, interest shall thereupon be credited under this sub-rule in respect only of the period from the beginning of the current year or from the date of deposit, as the case may be, up to the date on which the amount standing at the credit of the subscriber became payable.

(3) In this rule, the date of deposit shall, in the case of a recovery from emoluments, be deemed to be the first day of the month in which it is recovered: and in the case of an amount forwarded by the subscriber, shall be deemed to be the first day of the month of receipt, if

it is received by the Account Officer before the fifth day of that month, but if it is received on or after the fifth day of that month, the first day of the next suceeding month.

(4) In addition to any amount to be paid under rule 29, 30 or 31, interest thereon up to the end of the month preceding that in which the payment is made, or up to the end of the sixth month after the month in which such amount became payable, whichever of these periods be less, shall be payable to the person to whom such amount is to be paid:

Provided that where the Account Officer has intimated to that person (or his agent) a date on which he is prepared to make payment in cash, or has posted a cheque in payment to that person, interest shall be payable only up to the end of the month preceding the date so intimated, or the date of posting the cheque, as the case may be.

(5) Interest shall not be credited to the account of a Muhammadan subscriber if he informs the Account Officer that he does not wish to receive it; but if he subsequently asks for interest, it shall be credited with effect from the first day of the year in which he asks for it.

(6) The interest on amounts which under sub-rule (3) of rule 13, sub-rule (5) of rule 16, sub-rule (3) of rule 19, sub-rule (3) of rule 21, sub-rule (1) of rule 23, sub-rule (1) or (2) of rule 24, rule 29 or rule 30 are replaced at the credit of the subscriber in the Fund, shall be calculated at such rates as may be successively prescribed under sub-rule (1) of this rule and so far as may be in the manner described in this rule.

Advances from the Fund.

15. (1) A temporary advance may be granted to a subscriber from the amount standing to his credit in the Fund at the discretion of the authority specified in sub-rule (3), subject to the following conditions:—

(*a*) the subscriber must satisfy that authority of the necessity* for the advance;

(*b*) that authority shall record in writing its reason for granting the advance;

(*c*) an advance shall not except for special reasons to be recorded in writing by that authority—

(*i*) exceed three months' pay, or

(*ii*) be granted until at least twelve months after the final repayment of all previous advances together with interest thereon:

Provided that if the reason is of a confidential nature, it may be communicated to the Account Officer personally and/or confidentially.

(2) In fixing the amount of an advance the sanctioning authority shall pay due regard to the amount at the credit of the subscriber in the Fund.

* See Appendix B.

(3) The authority competent to grant an advance:—

(*a*) (*i*) exceeding three months' pay, or

(*ii*) within twelve months of the final repayment of all previous advances together with interest thereon,

shall be one of those specified in Appendix B to these Rules which may be varied or added to from time to time by order of the Local Government; and

(*b*) in any case not specified in clause (*a*), shall be the authority competent to grant an advance of pay on transfer under Article 159 (*a*) of the Civil Account Code.

16. (1) An advance shall be recovered from the subscriber in such number of equal monthly instalments as the sanctioning authority may direct; but such number shall not be less than twelve unless the subscriber so elects, or in any case more than twenty-four. A subscriber may, at his option, repay more than one instalment in a month. Each instalment shall be a number of whole rupees, the amount of the advance being raised or reduced, if necessary, to admit of the fixation of such instalments.

(2) Recovery shall be made in the manner prescribed in rule 13 for the realisation of subscriptions, and shall commence on the first occasion after the advance is made on which the subscriber draws pay, or remuneration on foreign service, for a full month. Recovery shall not be made, except with the subscriber's consent, while he is on leave or in receipt of subsistence grant and may be postponed, on the subscriber's written request, by the sanctioning authority during the recovery of an *advance of pay granted to the subscriber.

(3) If more than one advance has been made to a subscriber, each advance shall be treated separately for the purpose of recovery.

(4) (*a*) After the principal of the advance has been fully repaid, interest shall be paid thereon at the rate of one-fifth per cent. of the principal for each month or broken portion of a month during the period between the drawal and complete repayment of the principal:

Provided that Muhammadan subscribers whose deposits in the Fund carry no interest shall not be required to pay into the Fund any additional instalments on account of interest on advances granted to them from the Fund.

(*b*) Interest shall ordinarily be recovered in one instalment in the month after complete repayment of the principal; but, if the period referred to in clause (*a*) exceeds twenty months, interest may, if the subscriber so desires, be recovered in two equal monthly instalments. The method of recovery shall be that prescribed in sub-rule (2). Payments shall be rounded to the nearest rupee in the manner prescribed in rule 11.

(5) If an advance has been granted to a subscriber and drawn by him and the advance is subsequently disallowed before re-payment is completed, the whole or balance of the amount withdrawn, shall, with

*The expression "advance of pay" includes ordinary advance of pay granted under the relevant rules such as article 159 (*a*), (*b*) and (*h*) of the Civil Account Code but does not include advances for the building or repairs of a house, for the purchase of a conveyance or for the payment of passages overseas, which are of a different nature.

interest at the rate provided in rule 14, forthwith be re-paid by the subscriber to the Fund, or in default, be ordered by the Account Officer to be recovered by deduction from the emoluments of the subscriber by instalments or otherwise, as Government may direct:

Provided that Muhammadan subscribers whose deposits in the Fund carry no interest shall not be required to pay any interest.

(6) Recoveries made under this rule shall be credited as they are made to the subscriber's account in the Fund.

Payments towards Insurance Policies and Family Pension Funds.

17. Subject to the conditions hereinafter contained in rules 18 to 27:—

(*a*) (*i*) subscriptions to a family pension fund approved* in this behalf by the Local Government; or

(*ii*) payments towards a policy of life insurance

may, at the option of a subscriber, be substituted in whole or part for subscriptions due to the Fund;

(*b*) the amount of subscriptions with interest thereon standing to the credit of a subscriber in the Fund may be withdrawn to meet—

(*i*) a payment towards a policy of life insurance;

(*ii*) the purchase of a single payment insurance policy;

(*iii*) the payment of a single premium or subscriptions to a family pension fund approved* in this behalf by the Local Government:

Provided that no amount shall be withdrawn (1) to meet any payment or purchase made or effected more than twelve months before the withdrawal; or (2) in excess of the amount required to meet a premium or subscription actually due for payment within six months of the date of withdrawal.

Provided further that payments towards an educational endowment policy may not be substituted for subscriptions to the Fund and that no amounts may be withdrawn to meet any payment or purchase in respect of such a policy if that policy is due for payment in whole or part before the subscriber's age of normal superannuation.

Provided further that amounts withdrawn shall be rounded to the nearest whole rupee.

18. (1) If the total amount of any subscriptions or payments substituted under clause (*a*) of rule 17 is less than the amount of the minimum subscription payable to the Fund under rule 11 (1), the difference shall be rounded to the nearest rupee in the manner provided in sub-rule (4) of rule 11, and paid by the subscriber as a subscription to the Fund.

* The following funds have been approved by the Local Government :—

(1) Superior Services (India) Family Pension Fund.
(2) Bengal Uncovenanted Service Family Pension Fund.
(3) Bengal and Madras Service Family Pension Fund.
(4) General Family Pension Fund.
(5) Hindu Family Annuity Fund.
(6) Bengal Christian Family Pension Fund.

(2) If the subscriber withdraws any amount standing to his credit in the Fund for any of the purposes specified in clause (*b*) of rule 17, he shall, subject to his option under clause (*a*) of that rule, continue to pay to the Fund the subscription payable under rule 11.

19. (1) A subscriber who desires to substitute a subscription or payment under clause (*a*) of rule 17, may reduce his subscription to the Fund accordingly:

Provided that the subscriber shall—

(*a*) intimate to the Account Officer on his pay bill or by letter the fact of, and reason for, the reduction;

(*b*) send to the Account Officer, within such period as the Account Officer may require, receipts or certified copies of receipts in order to satisfy the Account Officer that the amount by which the subscription has been reduced was duly applied for the purposes specified in clause (*a*) of rule 17.

(2) A subscriber who desires to withdraw any amount under clause (*b*) of rule 17 shall—

(*a*) intimate the reason for the withdrawal to the Account Officer by letter;

(*b*) make arrangements with the Account Officer for the withdrawal;

(*c*) send to the Account Officer, within such period as the Account Officer may require, receipts or certified copies of receipts in order to satisfy the Account Officer that the amount withdrawn was duly applied for the purposes specified in clause (*b*) of rule 17.

(3) The Account Officer shall order the recovery of any amount by which subscriptions have been reduced, or of any amount withdrawn, in respect of which he has not been satisfied in the manner required by clause (*b*) of sub-rule (1) and clause (*c*) of sub-rule (2), with interest thereon at the rate provided in rule 14 from the emoluments of the subscriber and place it to the credit of the subscriber in the Fund.

20. (1) Government shall not make any payments on behalf of subscribers to Insurance Companies nor take steps to keep a policy alive.

(2) A policy to be acceptable under these rules shall be on the life of the subscriber, and shall (unless it is a policy effected by a male subscriber which is expressed on the face of it to be for the benefit of his wife, or of his wife and children, or any of them) be such as may be legally assigned by the subscriber to the Secretary of State in Council.

Explanation.—A policy on the joint lives of the subscriber and the subscriber's wife or husband shall be deemed to be a policy on the life of the subscriber for the purpose of this sub-rule.

(3) The policy may not be effected for the benefit of any beneficiary other than the wife or husband of the subscriber or the wife or husband and children of the subscriber or any of them:

Provided that subscribers who took out policies under Note 1 of rule 21* (*ii*) or under clause (*b*) or (*c*) of rule 21A* of the Rules previously in force, shall remain subject to the provisions of those rules in so far as policies so taken out are concerned.

* See Appendix C.

21. (1) The policy, within three months after the first withholding of a subscription or withdrawal from the Fund in respect of the policy; or in the case of an insurance company whose headquarters are outside India, within such further period as the Account Officer, if he is satisfied by the production of the completion certificate (*interim* receipt), may fix, shall—

(*a*) unless it is a policy effected by a male subscriber which is expressed on the face of it to be for the benefit of the wife of the subscriber, or of his wife and children, or any of them, be assigned to the Secretary of State in Council, as security for the payment of any sum which may become payable to the Fund under rule 26, and delivered to the Account Officer, the assignment being made by endorsement on the policy in Form (1) or Form (2) of the Forms in the Third Schedule according as the policy is on the life of the subscriber or on the joint lives of the subscriber and the subscriber's wife or husband;

(*b*) if it is a policy effected by a male subscriber which is expressed on the face of it to be for the benefit of the wife of the subscriber, or of his wife and children or any of them, be delivered to the Account Officer.

(2) The Account Officer shall satisfy himself by reference to the Insurance Company where possible, that no prior assignment of the policy exists.

(3) If the policy is not assigned and delivered, or delivered, within the said period of three months or such further period as the Account Officer may, under sub-rule (1), have fixed, any amount withheld or withdrawn from the Fund in respect of the policy shall, with interest thereon at the rate provided in rule 14, forthwith be paid or repaid, as the case may be, by the subscriber to the Fund, or, in default be ordered by the Account Officer to be recovered by deduction from the emoluments of the subscriber, by instalments or otherwise, as the Local Government may direct.

(4) Notice of assignment of the policy shall be given by the subscriber to the Insurance Company, and the acknowledgment of the notice by the Insurance Company shall be sent to the Account Officer within three months of the date of assignment.

Note 1.—Subscribers are advised to send notice of the assignment to the Insurance Company in duplicate, accompanied in cases in which the notice has to be sent to a company in Great Britain or Ireland, by a remittance of five shillings, which is the fee for the acknowledgment authorised by the Policies of Assurance Act, 1867.

Note 2.—Subscribers who proceed to Great Britain or Ireland on quitting the service are advised that under the English Stamp Law assignments or re-assignments are required to be stamped within 31 days of their first arrival in those countries. Otherwise penalty will be incurred under the Stamp Act, and difficulties may arise when the policy matures for payment.

22. The subscriber shall not during the currency of the policy draw any bonus the drawal of which during such currency is optional under the terms of the policy, and the amount of any bonus which under the terms of the policy the subscriber has no option to refrain

from drawing during its currency shall be paid forthwith into the fund by the subscriber or in default recovered by deduction from his emoluments by instalments or otherwise, as the Local Government may direct.

23. (1) Save as provided by rule 27 when the subscriber—

(*a*) quits the service; or

(*b*) has proceeded on leave preparatory to retirement and applies to the Account Officer for reassignment or return of the policy; or

(*c*) while on leave has been permitted to retire or declared by a competent medical authority to be unfit for further service and applies to the Account Officer for reassignment or return of the policy; or

(*d*) pays or repays to the Fund the whole of any amount withheld or withdrawn from the Fund for any of the purposes mentioned in sub-clause (*ii*) of clause (*a*) of rule 17 and sub-clauses (*i*) and (*ii*) of clause (*b*) of rule 17 with interest thereon at the rate provided in rule 14,

the Account Officer shall—

(*i*) if the policy has been assigned to the Secretary of State in Council under rule 21 or under the corresponding rule heretofore in force, reassign the policy in the first Form set forth in the Fourth Schedule to the subscriber, or to the subscriber and the joint assured, as the case may be, and make it over to the subscriber together with a signed notice of the reassignment addressed to the Insurance Company;

(*ii*) if the policy has been delivered to him under clause (*b*) of sub-rule (*1*) of rule 21, make over the policy to the subscriber:

Provided that, if the subscriber, after proceeding on leave preparatory to retirement, or after being, while on leave, permitted to retire or declared by a competent medical authority to be unfit for further service, returns to duty, any policy so reassigned or made over shall, if it has not matured or been assigned or charged or encumbered in any way, be again assigned to the Secretary of State in Council and delivered to the Account Officer, or again be delivered to the Account Officer, as the case may be, in the manner provided in rule 21, and thereupon the provisions of these rules shall, so far as may be, again apply in respect of the policy.

Provided further that, if the policy has matured or been assigned or charged or encumbered in any way, the provisions of sub-rule (3) of Rule 21, applicable to a failure to assign and deliver a policy shall apply.

(2) Save as provided by rule 27, when the subscriber dies before quitting the service, the Account Officer shall—

(*i*) if the policy has been assigned to the Secretary of State in Council under rule 21 or under the corresponding rule heretofore in force, reassign the policy in the second Form set forth in the Fourth Schedule to such person as may be legally entitled to receive it, and shall make over the policy to such person together with a signed notice of the reassignment addressed to the Insurance Company.

(*ii*) if the policy has been delivered to him under clause (*b*) of sub-rule (1) of rule 21, make over the policy to the beneficiary, if any, or, if there is no beneficiary, to such person as may be legally entitled to receive it.

24. (1) If a policy assigned to the Secretary of State in Council under rule 21 or under the corresponding rule heretofore in force, matures before the subscriber quits the service, and before his death, or if a policy on the joint lives of a subscriber and the subscriber's wife or husband, assigned under the said rule or under the corresponding rule heretofore in force, falls due for payment by reason of the death of the subscriber's wife or husband, the Account Officer shall, save as provided by rule 27, proceed as follows:—

(*i*) if the amount assured together with the amount of any accrued bonuses is greater than the whole of the amount withheld or withdrawn from the Fund in respect of the policy with interest thereon at the rate provided in rule 14, the Account Officer shall reassign the policy in the Form set forth in the Fifth Schedule to the subscriber or to the subscriber and the joint assured as the case may be, and make it over to the subscriber, who shall immediately on receipt of the policy monies from the Insurance Company pay or repay to the Fund the whole of any amount withheld or withdrawn with interest, and in default, the provisions of sub-rule (3) of rule 21 applicable to a failure to assign and deliver a policy shall apply;

(*ii*) if the amount assured together with the amount of any accrued bonuses is less than the whole of the amount withheld or withdrawn with interest, the Account Officer shall realise the amount assured together with any accrued bonuses and shall place the amount so realised to the credit of the subscriber in the Fund.

(2) Save as provided by rule 27, if a policy delivered to the Account Officer under clause (*b*) of sub-rule (1) of rule 21 matures before the subscriber quits the service, the Account Officer shall make over the policy to the subscriber:

Provided that if the interest in the policy of the wife of the subscriber, or of his wife and children, or any of them, as expressed on the face of the policy, expires when the policy matures, the subscriber, if the policy monies are paid to him by the Insurance Company, shall immediately on receipt thereof pay or repay to the Fund either—

(*i*) the whole of any amount withheld or withdrawn from the Fund in respect of the policy with interest thereon at the rate provided in rule 14,

or

(*ii*) an amount equal to the amount assured together with any accrued bonuses,

whichever is less, and, in default, the provisions of sub-rule (*3*) of rule 21 applicable to a failure to assign and deliver a policy shall apply.

25. If the interest of the subscriber in the family pension fund ceases, in whole or part, from any cause whatsoever, the provident

fund account of the subscriber shall forthwith be re-imbursed by the amount of the refund secured by the subscriber from the family pension fund, which amount shall, in default of reimbursement, be deducted from the subscriber's emoluments by instalments or otherwise, as the Local Government may direct.

26. If the policy lapses, or is assigned otherwise than to the Secretary of State in Council under rule 21, charged or encumbered, the provisions of sub-rule (3) of rule 21 applicable to a failure to assign and deliver a policy shall apply.

27. If the Account Officer receives notice of—

(*a*) an assignment (otherwise than an assignment to the Secretary of State in Council under rule 21), or

(*b*) a charge or encumbrance on, or

(*c*) an order of a Court restraining dealings with

the policy or any amount realised thereon, the Account Officer shall not—

(*i*) reassign or make over the policy as provided in rule 23, or

(*ii*) realise the amount assured by the policy or reassign, or make over the policy, as provided in rule 24,

but shall forthwith refer the matter to the Local Government.

28. Notwithstanding anything contained in these rules, if the sanctioning authority is satisfied that money drawn as an advance from the Fund under clause (1) of rule 15 or withheld or withdrawn from the Fund under clause (*a*) or clause (*b*) of rule 17, has been utilised for a purpose other than that for which sanction was given to the drawal, withholding or withdrawal of the money, the amount in question, shall, with interest at the rate provided in rule 14, forthwith be repaid or paid, as the case may be, by the subscriber to the Fund, or in default, be ordered to be recovered by deduction in one sum from the emoluments of the subscriber, even if he be on leave. If the total amount to be repaid or paid, as the case may be, be more than half the subscribers' emoluments recoveries shall be made in monthly instalments of moieties of his emoluments till the entire amount recoverable be repaid or paid, as the case may be, by him.

Note.—The term "emoluments" as used in this rule does not include subsistence grant.

Final withdrawal of Accumulations in the Fund.

29. When a subscriber quits the service the amount standing to his credit in the Fund shall become payable to him:

Provided that a subscriber, who has been dismissed from the service and is subsequently reinstated in the service shall, if required to do so by the Local Government, repay any amount paid to him from the Fund in pursuance of this rule, with interest thereon at the rate provided in rule 14, in the manner provided in the proviso to rule 30. The amount so repaid shall be credited to his account in the Fund.

30. When a subscriber—

(*a*) has proceeded on leave preparatory to retirement, or, if he is employed in a vacation department, on leave preparatory to retirement combined with vacation, or

(*b*) while on leave, has been permitted to retire or been declared by a competent medical authority to be unfit for further service,

the amount standing to his credit in the Fund shall, upon application made by him in that behalf to the Account Officer, become payable to the subscriber:

Provided that the subscriber, if he returns to duty, shall, if required to do so by the Local Government, repay to the Fund, for credit to his account, the whole or part of any amount paid to him from the Fund in pursuance of this rule with interest thereon at the rate provided in rule 14, in cash or securities, or partly in cash and partly in securities by instalments or otherwise, by recovery from his emoluments or otherwise, as the Local Government may direct.

*31. On the death of a subscriber before the amount standing to his credit has become payable, or where the amount has become payable, before payment has been made;

(*i*) when the subscriber leaves a family—

(*a*) if a nomination made by the subscriber in accordance with the provisions of rule 8 or of the corresponding rule heretofore in force in favour of a member or members of his family subsists, the amount standing to his credit in the Fund or the part thereof to which the nomination relates shall become payable to his nominee or nominees in the proportion specified in the nomination.

(*b*) if no such nomination in favour of a member or members of the family of the subscriber subsists, or if such nomination relates only to a part of the amount standing to his credit in the Fund, the whole amount or the part thereof to which the nomination does not relate, as the case may be, shall, notwithstanding any nomination purporting to be in favour of any person or persons other than a member or members of his family, become payable to the members of his family in equal shares:

Provided that no share shall be payable to—

(1) sons who have attained legal majority;

(2) sons of a deceased son who have attained legal majority;

(3) married daughters whose husbands are alive;

(4) married daughters of a deceased son whose husbands are alive;

if there is any member of the family other than those specified in clauses (1), (2), (3) and (4);

Provided further that the widow or widows and the child or children of a deceased son shall receive between them in equal parts only the share which that son would have received if he had survived the subscriber and if, in a case where had he survived the subscriber, he would have been excluded from a share under clause (1) of the first proviso, he had not been so excluded.

* See also Appendix D.

(*ii*) when the subscriber leaves no family, if a nomination made by him in accordance with the provisions of rule 8 or of the corresponding rule heretofore in force in favour of any person or persons subsists, the amount standing to his credit in the Fund or the part thereof to which the nomination relates, shall become payable to his nominee or nominees in the proportion specified in the nomination.

32. (1) When the amount standing to the credit of a subscriber in the Fund becomes payable, it shall be the duty of the Account Officer to make payment, as provided in section 4 of the Provident Funds Act, 1925.

(2) If the person to whom, under these rules, any amount or policy is to be paid, assigned, reassigned or delivered, is a lunatic for whose estate a manager has been appointed in this behalf under the Indian Lunacy Act, 1912, the payment or reassignment or delivery will be made to such manager and not to the lunatic.

(3) Any person who desires to claim payment under this rule shall send a written application in that behalf to the Account Officer. Payment of amounts withdrawn shall be made in India only. The persons to whom the amounts are payable shall make their own arrangements to receive payment in India.

Note.—When the amount standing to the credit of a subscriber has become payable under Rule 29, 30 or 31, the Account Officer shall authorise prompt payment of that portion of the amount standing to the credit of a subscriber in regard to which there is no dispute or doubt, the balance being adjusted as soon after as may be.

33. (*a*) If a Government servant who is a subscriber to any other Government Provident Fund, which is a non-contributory provident fund, is permanently transferred to pensionable service under the Local Government, the amount of subscriptions, together with interest thereon, standing to his credit in such other fund at the date of transfer shall be transferred to his credit in the Fund.

(*b*) If a Government servant who is a subscriber to the Contributory Provident Fund (Bengal) is permanently transferred to pensionable service under the Local Government and elects or is required to earn pension in respect of such pensionable service—

(*i*) the amount of subscriptions, with interest thereon, standing to his credit in such contributory provident fund at the date of transfer shall be transferred to his credit in the Fund;

(*ii*) the amount of Government contributions, with interest thereon, standing to his credit in such contributory provident fund shall be repaid to the Local Government and credited to Provincial Revenues; and

(*iii*) he shall in exchange be entitled to count towards pension such part of the period during which he subscribed to such contributory provident fund as the Local Government may determine.

Procedure Rules.

34. All sums paid into the Fund under these rules shall be credited in the books of Government to an account named "The General Provident Fund". Sums of which payment has not been taken within six months after they become payable under these rules shall be transferred to "Deposits" at the end of the year and treated under the ordinary rules relating to deposits.

35. When paying a subscription in India, either by deduction from emoluments or in cash, a subscriber shall quote the number of his account in the Fund, which shall be communicated to him by the Account Officer. Any change in the number shall similarly be communicated to the subscriber by the Account Officer.

36. (1) As soon as possible after the close of each year, the Account Officer shall send to each subscriber a statement of his account in the Fund showing the opening balance as on the 1st April of the year, the total amount credited or debited during the year, the total amount of interest credited as on the 31st March of the year and the closing balance on that date. The Account Officer shall attach to the statement of account an enquiry whether the subscriber—

(*a*) desires to make any alteration in any nomination made under rule 8 or under the corresponding rule heretofore in force;

(*b*) has acquired a family in cases where the subscriber has made no nomination in favour of a member of his family under sub-rule (2) of rule 8.

(2) Subscribers to satisfy themselves as to the correctness of the annual statement, and errors should be brought to the notice of the Account Officer within six months from the date of receipt of the statement.

(3) The Account Officer shall, if required by a subscriber, once, but not more than once, in a year inform the subscriber of the total amount standing to his credit in the Fund at the end of the last month for which his account has been written up.

First Schedule [rule 8 (2)].

Form of Nomination when Subscriber has a Family.

I hereby direct that the amount at my credit in the General Provident Fund at the time of my death shall be distributed among the members of my family mentioned below in the manner shown against their names:—

1 Name and address of the nominee or nomenees.	2 Relationship with the subscriber.	3 Age of the nominee.	4 Amount or share of accumulation.

Date

Signature of Subscriber.

Station

Two witnesses to signature.

Note.—Column 4 shall be filled in so as to cover the whole amount at credit.

Second Schedule [rule 8 (3)].

Form of Nomination when Subscriber has no Family.

I hereby declare that I have no family* and direct that the amount at my credit in the General Provident Fund at the time of my death shall, in the event of my having no family, be distributed among the persons mentioned below in the manner shown against their names:—

1	2	3	4
Name and address of the nominee or nominees.	Relationship, if any, with the subscriber.	Age of the nominee.	Amount or share of accumulation.

Date

Signature of Subscriber.

Station

Two witnesses to signature.

Note.—Column 4 shall be filled in so as to cover the whole amount at credit.

Third Schedule [rule 21 (1) (a)].

(1)

Forms of Assignment.

"I, A. B., of.....hereby assign unto the Secretary of State for India in Council the within policy of assurance as security for payment of all sums which under rule 26 of the General Provident Fund Rules (Bengal Services) I may hereafter become liable to pay to that Fund.

I hereby certify that no prior assignment of the within policy exists."

Signature of Subscriber.

One witness to signature.

(2)

We,* A. B. (the subscriber) of.....and C. D. (the joint assured) of.....in consideration of the Secretary of State for India in Council agreeing at our request to accept payments towards the

* As defined in rule 2 (*l*) (c) of the General Provident Fund (Bengal Services) Rules.

within policy of assurance in substitution for the subscriptions payable by me the said A. B. to the General Provident Fund [or, as the case may be, to accept the withdrawal of the sum of Rs. , from the sum to the credit of the said A. B. in the General Provident Fund for payment of the premium of the within policy of assurance], hereby jointly and severally assign unto the said Secretary of State the within policy of assurance as security for payment of all sums which under rule 26 of the General Provident Fund (Bengal Services) Rules, the said A. B. may hereafter become liable to pay to that Fund.

We hereby certify that no prior assignment of the within policy exists.

Signatures of Subscriber and the Joint Assured.

One witness to signatures.

Note.—The assignment may be executed on the policy itself either in the subscriber's handwriting or in type, or alternatively a typed or printed slip containing the assignment may be pasted on the blank space provided for the purpose on the policy. A typed or printed endorsement must be duly signed and if pasted on the policy it must be initialled across all four margins.

Fourth Schedule (rule 23).

Forms of reassignment by the Secretary of State for India in Council.

(1)

All sums which have become payable by the above-named A. B. under rule 26 of the General Provident Fund Rules (Bengal Services) having been paid and all liability for payment by him of any such sums in the future having ceased the Secretary of State for India in Council doth hereby reassign the within policy of assurance to the said

A. B.

A. B. and C. D.

Dated.....19 .

(2)

The above-named A. B. having died on the.....day of..... 19 , the Secretary of State for India in Council doth hereby reassign the within policy of assurance to C. D.....*

Dated.....19 .

Fifth Schedule (rule 24).

Form of reassignment by the Secretary of State for India in Council.

The Secretary of State for India in Council doth hereby reassign the within policy to the said

A. B.

A. B. and C. D.

Dated.....19 .

---

* Fill in particulars of persons legally entitled to receive the policy.

APPENDIX A.

[*See* rules 2 (*2*), 32 (*1*).]

Act No. XIX of 1925.

[As amended by Act No. 28 of 1925, Nos. VII and XII of 1927 and No. 1 of 1930.]

PASSED BY THE INDIAN LEGISLATURE.

(*Received the assent of the Governor-General on the 27th August 1925.*)

An Act to amend and consolidate the law relating to Government and other Provident Funds.

Whereas it is expedient to amend and consolidate the law relating to Government and other Provident Funds; it is hereby enacted as follows:—

1. *Short title, extent and commencement.*—(*1*) This Act may be called the Provident Funds Act, 1925.

(*2*) It extends to the whole of British India, including British Beluchistan.

(*3*) It shall come into force on such date as the Governor-General in Council may, by notification in the Gazette of India, appoint.

2. *Definitions.*—In this Act, unless there is anything repugnant in the subject or context,—

(*a*) "compulsory deposit" means a subscription to, or deposit in a Provident Fund which, under the rules of the Fund, is not, until the happening of some specified contingency, repayable on demand otherwise than for the purpose of the payment of premia in respect of a policy of life insurance, or the payment of subscriptions or premia in respect of a family pension fund and includes any contribution and any interest or increment which has accrued under the rules of the Fund on any such subscription, deposit or contribution, and also any such subscription, deposit, contribution, interest or increment remaining to the credit of the subscriber or depositor after the happening of any such contingency;

(*b*) "contribution" means any amount credited in a Provident Fund, by any authority administering the Fund, by way of addition to, a subscription to or deposit or balance at the credit of an individual account in the Fund; and "contributory Provident Fund" means a Provident Fund the rules of which provide for the crediting of contributions;

(*c*) "dependant" means any of the following relatives of a deceased subscriber to, or a depositor in, a Provident Fund, namely, a wife, husband, parent, child, minor brother, unmarried sister and a deceased son's widow and child, and, where no parent of the subscriber or depositor is alive, a paternal grand-parent;

(*d*) "Government Provident Fund" means a Provident Fund, other than a Railway Provident Fund, constituted by the authority of the Government for any class or classes of its employees or of persons employed in educational institutions or employed by bodies existing solely for educational purposes;

(*e*) "Provident Fund" means a fund in which subscriptions or deposits of any class or classes of employees are received and held on their individual accounts, and includes any contributions and any interest or increment accruing on such subscriptions, deposits or contributions under the rules of the Fund;

(*f*) "Railway administration" means—

(*i*) any company administering a railway or tramway in British India either under a special Act of Parliament or of the Indian or a local Legislature, or under contract with the Secretary of State for India in Council, the Governor-General in Council or a Local Government, or

(*ii*) the manager of any railway or tramway administered by the Governor-General in Council or a Local Government.

and includes, in any case referred to in sub-clause (*ii*), the Governor-General in Council or the Local Government, as the case may be;

(*g*) "Railway Provident Fund" means a Provident Fund constituted by the authority of a railway administration for any class or classes of its employees.

3. *Protection of compulsory deposits.*—(*1*) A compulsory deposit in any Government or Railway Provident Fund shall not in any way be capable of being assigned or charged and shall not be liable to attachment under any decree or order of any Civil, Revenue or Criminal Court in respect of any debt or liability incurred by the subscriber or depositor, and neither the Official Assignee nor any receiver appointed under the Provincial Insolvency Act, 1920 (V of 1920), shall be entitled to, or have any claim on, any such compulsory deposit.

(*2*) Any sum standing to the credit of any subscriber to, or depositor in, any such Fund at the time of his decease and payable under the rules of the Fund to any dependant of the subscriber or depositor, or to such person as may be authorised by law to receive payment on his behalf, shall, subject to any deduction authorised by this Act and, save where the dependant is the widow or child of the subscriber or depositor, subject also to the rights of an assignee under an assignment made before the commencement of this Act, vest in the dependant, and shall, subject as aforesaid, be free from any debt or other liability incurred by the deceased or incurred by the dependant before the death of the subscriber or depositor.

4. *Provision regarding repayment.*—(*1*) When under the rules of any Government or Railway Provident Fund the sum standing to the credit of any subscriber or depositor, or the balance thereof after the making of any deduction authorised by this Act, has become payable,

the officer whose duty it is to make the payment shall pay the sum or balance, as the case may be, to the subscriber or depositor, or, if he is dead, shall—

(*a*) if the sum or balance, or any part thereof, vests in a dependant under the provisions of section 3, pay the same to the dependant or to such person as may be authorised by law to receive payment on his behalf; or

(*b*) if the whole sum or balance, as the case may be, does not exceed five thousand rupees, pay the same, or any part thereof, which is not payable under clause (*a*), to any person nominated to receive it under the rules of the Fund, or, if no person is so nominated, to any person appearing to him to be otherwise entitled to receive it; or

(*c*) in the case of any sum or balance, or any part thereof, which is not payable to any person under clause (*a*) or clause (*b*) pay the same,—

(*i*) to any person nominated to receive it under the rules of the Fund, on production by such person of probate or letters of administration evidencing the grant to him of administration to the estate of the deceased or a certificate granted under the Succession Certificate Act, 1889 (II of 1899), or under the Bombay Regulation VIII of 1827, entitling the holder thereof to receive payment of such sum, balance or part, or

(*ii*) where no person is so nominated to any person who produces such probate, letters or certificate:

Provided that, where the whole or any part of any sum standing to the credit of the subscriber or depositor has been assigned to any other person before the commencement of this Act, and notice in writing of the assignment has been received by the officer from the assignee, the officer shall, after making any deduction authorised by this Act and any payment due under clause (*a*) to or on behalf of the widow or children of the subscriber or depositor—

(*i*) if the subscriber or depositor or, if he is dead, the person to whom in the absence of any valid assignment the sum or balance would be payable under this sub-section gives his consent in writing, pay the sum or part or the balance thereof, as the case may be, to the assignee, or

(*ii*) if such consent is not forthcoming, withhold payment of the sum, part or balance, as the case may be, pending a decision of a competent Civil Court as to the person entitled to receive it.

(*2*) The making of any payment authorised by sub-section (*1*) shall be a full discharge to the Government or the railway administration, as the case may be, from all liability in respect of so much of the sum standing to the credit of the subscriber or depositor as is equivalent to the amount so paid.

5. *Rights of nominees.*—(*1*) Subject to the provisions of this Act, but otherwise notwithstanding anything contained in any law for the time being in force or any disposition, whether testamentary or otherwise, by a subscriber to, or depositor in, a Government or Railway Provident Fund of the sum standing to his credit in the Fund, or of

any part thereof, any nomination, duly made in accordance with the rules of the Fund, which purports to confer upon any person the right to receive the whole or any part of such sum on the death of the subscriber or depositor, shall be deemed to confer such right absolutely, until such nomination is varied by another nomination made in like manner or is expressly cancelled by the subscriber or depositor by notice given in such manner and to such authority as is prescribed by those rules.

(*2*) Notwithstanding anything contained in the Succession Certificate Act, 1889 (VII of 1899), or the Bombay Regulation VIII of 1827, any such person shall, on the death of the subscriber or depositor, be entitled to the grant of a certificate under that Act, or that Regulation, as the case may be, entitling him to receive payment of such sum or part, and such certificate shall not be deemed to be invalidated or superseded by any grant to any other person of probate or letters of administration to the estate of the deceased.

6. *Power to make deductions.*—When the sum standing to the credit of any subscriber or depositor in any Government or Railway Provident Fund which is a Contributory Provident Fund becomes payable, there may, if the authority specified in this behalf in the rules of the Fund so directs, be deducted therefrom and paid to Government or the Railway administration, as the case may be—

(*a*) any amount due under a liability incurred by the subscriber or depositor to Government or the Railway administration, but not exceeding in any case the total amount of any contributions credited to the account of the subscriber or depositor and of any interest or increment which has accrued on such contributions; or

(*b*) where the subscriber or depositor has been dismissed from his employment for any reasons specified in this behalf in the rules of the Fund, or where he has resigned such employment within five years of the commencement thereof, the whole or any part of the amount of any such contributions, interest and increment.

7. *Protection for acts done in good faith.*—No suit or other legal proceedings shall lie against any person in respect of anything which is in good faith done or intended to be done under this Act.

8. *Power to apply the Act to other Provident Funds.*—(*1*) The Local Government may, by notification in the local official Gazette, direct that the provisions of this Act shall apply to any Provident Fund established for the benefit of its employees by any local authority within the meaning of the Local Authorities Loans Act (IX of 1914), and, on the making of such declaration, this Act shall apply accordingly, as if such Provident Fund were a Government Provident Fund and such local authority were the Government.

(*2*) The Governor-General in Council may, by notification in the Gazette of India, direct that the provisions of this Act shall apply to any Provident Fund established for the benefit of the employees of any of the institutions specified in the Schedule, or of any group of such institutions, and, on the making of such declaration, this Act shall apply accordingly, as if such Provident Fund were a Government Provident Fund and the authority having custody of the Fund were the Government:

Provided that section 6 shall apply as if the authority making the contributions referred to in that section were the Government.

(*3*) The Governor-General in Council may, by notification in the Gazette of India, add to the Schedule the name of any public institution he may deem fit, and any such addition shall take effect as if it had been made by this Act.

9. *Savings as to estates of soldiers (56 and 57 Vict., c. 5).*—Nothing in section 4 or section 5 shall apply to money belonging to any estate for the purpose of the administration of which the Regimental Debts Act, 1893, applies.

"THE SCHEDULE.

LIST OF INSTITUTIONS.

[*See sub-section (2) of section 8.*]

1. The Pasteur Institute of India, Kasauli.
2. The Calcutta Improvement Tribunal.
3. A Court of Wards.
4. The Indian Central Cotton Committee.
5. The Trustees for the European Hospital for mental diseases at Ranchi.
6. The National Association for supplying female medical aid to the women of India.
7. A College affiliated to a University established by Statute.
8. The Indian Red Cross Society.
9. The Indian Lac Cess Committee."

APPENDIX B.

[Rule 15 (*1*) (*a*).]

Executive Instructions.

The following are deemed to be good and sufficient reasons for the grant of advances, provided the sanctioning authority is satisfied that the applicant's pecuniary circumstances justify an advance, and that the amount advanced will be expended on the object for which it is given:—

(*a*) to pay expenses incurred in connection with the prolonged illness of a subscriber or any person actually dependent on him;

(*b*) to pay for the overseas passage for reasons of health or education of a subscriber or any person actually dependent on him;

(*c*) to pay obligatory expenses on a scale appropriate to the subscriber's status in connection with marriages, funerals or ceremonies which by his religion it is incumbent on him to perform.

Sanctioning authorities should reject an application for an advance to repay a debt incurred on account of illness or any other recognised purpose, made unreasonably long after the event to which it relates.

Advances are not rigidly confined to the objects mentioned in clauses (*a*) to (*c*) above, but may be sanctioned only for reasons no less cogent. An advance may not be granted for the purchase of a house or land, or for the erection of, or repairs to, a building, or to meet the expenses of law suits, or to repay ordinary debts, or to furnish security deposits, or to purchase motor-cars or other means of conveyance, or to meet the marriage expenses of a European, Anglo-Indian or Indian Christian subscriber or any person actually dependent on him.

List of authorities competent to grant advances under Rule 15 (3) (a).

A Department of the Local Government.

Heads of Departments whose names appear in the Delegation Chapter to the Fundamental and Subsidiary Rules.

Superintendent, Government Printing, Bengal.

Deputy Inspectors-General of Police, Bengal.

APPENDIX C.

[Rules 4, 20 (*3*).]

(*Extracts from the Rules regulating the General Provident Fund as corrected up to the end of July 1929.*)

1. * * * * * * *

Note 2.—Section writers who are members of fixed establishments and piece-workers in Government Presses are eligible to subscribe to the Fund.

Note 3.—Patwaris, in inferior service, in permanent employ, are eligible to subscribe to the Fund.

Note 4.—Patwaris, in inferior service, in temporary employ and all officers in temporary superior service shall be eligible to subscribe to the Fund, with the consent of the head of their office, provided that they have been employed or, in the opinion of the head of their office, are likely to be employed for at least three years.

* * * * * * * *

---

3. * * * * * * *

(*c*) * * * * * * *

Note 1.—Temporary Engineers in the Public Works Department appointed on or after the 1st July 1913 and also temporary Engineers

already serving in the Department, whose services have been or may be re-engaged for a further period on an increased rate of pay, shall be required to subscribe to the Fund at the rate of 1½ annas in the rupee or 9 *per cent.* of pay.

* * * * * * * *

7. * * * * * * *

Note 1.—Explanations and Exceptions.

(*f*) *Piece-workers in Government Presses.*—The subscriptions of piece-workers in Government Presses are not subject to the minimum limit of 6¼ per cent. of pay. In their case the maximum limit of 15⅝ per cent. shall be calculated on the highest earnings drawn for any day falling within the period 15th February to 14th March of the financial year preceding. If, however, a piece-worker has been absent during the whole of that period the limit of 15⅝ per cent. shall be calculated on the highest earnings drawn for any day of the first subsequent press month (15th of one month to the 14th of the next month) in which he is employed.

(*g*) *Other piece-rate workers.*—The subscriptions of section writers, typists, and other piece-rate workers who are members of fixed establishments shall be calculated on their earnings for March of the preceding financial year.

* * * * * * * *

21. (*ii*) An insurance policy shall be on the subscriber's own life, in which case it is immaterial what form the policy takes, *i.e.*, it may be a life or an endowment, or double endowment policy, but it shall be such as is legally assignable to Government.

Note 1.—A guarantee policy which ensures the payment of the sum assured in the event of the policy-holder being retired by the Medical Board shall be accepted for the purposes of this rule.

A contingent annuity, which, in the event of his death, ensures a certain income to the insurer's wife or children, or both, shall also be accepted for the purposes of this rule.

Note 2.—If a policy of insurance is effected by a subscriber on his own life for the benefit of a sole beneficiary specially named therein, a formal assignment by both the insured and the sole beneficiary shall be permissible. An assignment of a policy effected by a subscriber on his own life for the benefit of more than one beneficiary whether existent or not at the date of the policy shall not, in view of the attendant legal difficulties, be permissible under this rule.

* * * * * * * *

21A. (*b*) A married subscriber to the Fund may substitute, for subscriptions to the General Provident Fund, payments towards either (*i*) a policy of assurance effected on his own life, if the policy, on the face of it, is for the benefit of his wife or of his children or of any or all of these, provided that, if such policy matures not at death, but after a period of years, the date of maturity shall not be earlier than the earliest date on which the subscriber may, by the terms of his service, retire; or (*ii*) any policy of assurance effected on his own life which he has assigned to trustees by a deed of settlement for the benefit of his wife or of his children or of any or all of these.

(*c*) A married subscriber to the Fund may substitute, or continue to substitute, as the case may be, for contributions to the General Provident Fund, payments towards a policy of assurance on his own life to which he has already been subscribing, provided that he either (*i*) assigns his existing policy to trustees by a deed of settlement for the benefit of his wife or of his children or of any or all of these; or (*ii*) converts his policy into a policy of assurance effected on his own life, but expressed on the face of it to be for the benefit of his wife or of his children or of any or all of these, provided that if such policy matures not at death, but after a period of years, the date of maturity shall not be earlier than the earliest date on which he may, by the terms of his service, retire; or (*iii*) converts his policy into any policy of assurance, effected on his own life, and then assigns it to trustees by a deed of settlement for the benefit of his wife or of his children or of any or all of these, and provided that if he has, as a bachelor, been substituting for contributions to the Fund payments towards such policy of assurance, then such assignment, conversion or conversion and assignment, shall be effected before or within three months after his marriage.

Note 1.—If upon the conversion of an existing policy any portion of the surrender value of such policy is not applied in effecting the new policy, such portion shall be paid or repaid to the Fund and placed to the credit of the subscriber's account.

* * * * * * * *

APPENDIX D.

[Rule 31.]

1. Any sum payable under rule 31 to a member of the family of a subscriber vests in such member under sub-section (2) of section 3 of the Provident Funds Act, 1925.

2. When a nominee is a dependant of the subscriber as defined in clause (*c*) of section 2 of the Provident Funds Act, 1925, the amount vests in such nominee under sub-section (2) of section 3 of the Act.

3. When the subscriber leaves no family and no nomination made by him in accordance with the provisions of rule 8 subsists, or if such nomination relates only to part of the amount standing to his credit in the Fund, the relevant provisions of clause (*b*) and of sub-clause (*ii*) of clause (*c*) of sub-section (1) of section 4 of the Provident Funds Act, 1925, are applicable to the whole amount or the part thereof to which the nomination does not relate.

APPENDIX E.

[Rule 17.]

Where a subscriber intends to take out a life assurance policy in any Company and to substitute premiums on such a policy for subscriptions to the General Provident Fund, he should satisfy himself that the

Company concerned is a sound one. Every Life Assurance Company working in India is required by law to deposit with Government copies of the following documents—

(*a*) The actuary's report on the latest investigation made by him into its financial condition including a valuation of its liabilities,

(*b*) Life assurance revenue account for the last financial year, and

(*c*) Balance sheet as at the close of the last financial year.

These should be asked for. The subscriber should examine the documents and apply the following three tests to judge for himself the financial stability of the Company:—

(1) whether the latest actuarial investigation disclosed a *divisible surplus*, namely a surplus a portion of which was allocated to policy holders,

(2) whether the revenue account shows that the expenses of management, including commission, did not absorb more than a third of the premium income in the last financial year, and

(3) whether in the latest balance sheet "loans on personal security" did not constitute an appreciable portion of the total assets of the Company.

D. GLADDING,

Secy. to the Govt. of Bengal.

PUBLIC WORKS DEPARTMENT.

Orders by the Superintending Engineer, Eastern Circle, Dacca.

No. 1E.—11th January 1935.—Babu Bhupendra Nath Sarkar, Assistant Engineer in charge of the Faridpur subdivision, is, in the interest of public service, transferred to the Dacca Division and appointed to hold charge of the Dacca subdivision.

A. N. BOSE, *Superintending Engineer, Eastern Circle.*

IRRIGATION DEPARTMENT.

Establishment.

NOTIFICATIONS.

No. 1-C.I.E.—3rd January 1935.—Babu Angsujit Mukherji, Assistant Engineer, on return from leave, is posted to the Nadia Rivers Division.

No. 2-C.I.E.—3rd January 1935.—Babu Bhuban Mohan Mukherjee, Assistant Engineer, is transferred, in the interests of the public service, from the Nadia Rivers Division to the office of the Superintending Engineer, South-Western Circle.

T. A. CURRY, *Chief Engineer.*

DEPARTMENT OF AGRICULTURE AND INDUSTRIES.

Industries.

NOTIFICATIONS.

Minister-in-charge: The Hon'ble Nawab K. G. M. Faroqui, Khan Bahadur.

No. 105Ind.—4th January 1935.—In pursuance of section 6 of the Bengal State Aid to Industries Act, 1931 (Bengal Act III of 1931), the Government of Bengal (Ministry of Industries) are pleased to publish the names of Mr. Saileswar Singh Roy, M.L.C., and Mr. P. Banerjee, M.L.C., who have been elected under section 9 read with clause (*c*) of sub-section (*1*) of section 3 of the said Act by the Bengal Legislative Council to be members of the Board of Industries, Bengal, *vice* Mr. N. K. Basu, M.L.C., and the Hon'ble Khan Bahadur Maulvi Azizul Haque, resigned.

Calcutta.—No. 219Ind.—10th January 1935. —In pursuance of section 6 of the Bengal State Aid to Industries Act, 1931 (Bengal Act III of 1931), the Government of Bengal (Ministry of Industries) are pleased to publish the name of Mr. E. J. Dawson, Superintendent of the Advances Department, Imperial Bank of India, Calcutta, who has been appointed under section 9 read with clause (*b*) of sub-section (*1*) of section 3 of the said Act to be a member of the Board of Industries, Bengal, *vice* Mr. R. C. Anderson, resigned.

RESOLUTION—No. 183Ind.

Calcutta, the 9th January 1935.

Minister-in-charge: The Hon'ble Nawab K. G. M. Faroqui, Khan Bahadur.

Read an application, dated the 1st September 1934, from Messrs. B. C. Ghose and S. C. Ghose, proprietors of Messrs. The Sisir Soap Works, Dum Dum, for a guarantee of cash credit with a bank to the extent of Rs. 5,000 for a period of two years under the Bengal State Aid to Industries Act, 1931 (Bengal Act III of 1931), for the purpose of providing working capital for the concern.

Read also a copy of the resolution of the meeting of the Board of Industries, Bengal, held on 5th November 1934 and the report submitted with letter No. 17761G., dated the 29th November 1934, from the Secretary to the Board of Industries, Bengal.

Order.—Ordered that the application be rejected and the resolution published in the *Calcutta Gazette.*

By order of the Govt. of Bengal (Ministry of Industries),

J. D. V. HODGE,
Secy. to the Govt. of Bengal.

Co-operative Societies.

NOTIFICATIONS.

Minister-in-charge: The Hon'ble Nawab K. G. M. Faroqui, Khan Bahadur.

Nadia - Birbhum. — No. 325Co-op.—11th January 1935.—Babu Provash Chandra Pathak, Sub-Deputy Collector, Nadia, is appointed to be Manager of the Co-operative Land Mortgage Bank at Suri (Birbhum).

Mymensingh - Jessore. — No. 326Co-op.— 11th January 1935.—Maulvi Nur Muhammad Chaudhuri, Sub-Deputy Collector, Tangail, Mymensingh, is appointed to be Manager of the Co-operative Land Mortgage Bank at Jessore.

Forests

NOTIFICATIONS.

No. 14For.—3rd January 1935.—In exercise of the power conferred by section 3 of the Wild Birds and Animals Protection Act, 1912 (VIII of 1912), read with section 21 of the General Clauses Act, 1897 (X of 1897), the Governor in Council is pleased to make the following amendment modifying the close seasons for certain animals and birds, throughout the whole of the Presidency of Bengal as published under list B of notification No. 10479For., dated the 10th November 1914, and as subsequently amended in notification No. 12246For., dated the 24th October 1930:—

In list B for "All pigeons and peafowl—1st March to 30th September" *substitute*—

"All pigeons except rock pigeons—1st March to 31st August.

Peafowl—1st March to 30th September."

No. 15For.—3rd January 1935.—In exercise of the powers conferred by clauses (*1*)(*i*) of section 26 and (*j*) of section 32 of the Indian Forest Act, 1927 (XVI of 1927), the Governor in Council is pleased to make the following amendment modifying the close seasons for animals and birds prescribed in the rules regulating hunting, shooting and fishing within the reserved and protected forests in Bengal, published under notification No. 839For., dated the 23rd January 1915, and as subsequently amended in notification No. 12255For., dated the 24th October 1930, viz.—

In rule 2 of the said rules for "All pigeons and peafowl—1st March to 30th September" *substitute*—

"All pigeons except rock pigeons—1st March to 31st August.

Peafowl—1st March to 30th September."

Dacca - Mymensingh. — No. 35For.—11th January 1935.—In exercise of the powers conferred by sections 41 and 42 of the Indian Forest Act, 1927 (XVI of 1927), the Governor in Council is pleased to make the following amendments in the Attiah Forests Transit Rules, 1927, published with this Government notification No. 17291For., dated the 5th December 1927, namely:—

For sub-clause (*a*) of clause (*1*) of rule 4 of the said rules *substitute* the following sub-clause:—

"(*a*) Per boat—

Up to twenty-five maunds capacity, annas four, and thereafter for every additional twenty-five maunds or part thereof, at the rate of annas four."

For sub-clause (*a*) of clause (*1*) of paragraph 3 of Appendix I to the said rules *substitute* the following sub-clause:—

"(*a*) Per boat—

Up to twenty-five maunds capacity, annas four, and thereafter for every additional twenty-five maunds or part thereof, at the rate of annas four."

J. D. V. HODGE,
Secy. to the Govt. of Bengal.

REVENUE DEPARTMENT.

Land Revenue.

NOTIFICATIONS.

24-Parganas - Murshidabad.—No. 283L.R.—9th January 1935.—In exercise of the powers conferred by section 3 of the Murshidabad Estate Administration Act, 1933 (XXIII of 1933), the Governor in Council is pleased to appoint Maulvi Wali-ul-Islam, Deputy Magistrate and Deputy Collector, Alipore, to be the Manager on behalf of the Secretary of State of the whole of the immoveable properties of the estate and of the rents, issues and profits thereof and for the reception and application of the monthly sum of Rs. 19,166-10-8 payable from the Government Treasury at Berhampore in the district of Murshidabad, *vice* Mr. K. C. De, C.I.E., I.C.S. (retired).

Bogra.—No. 701L.R.—12th January 1935.—Under the provisions of section 3 (*14*) of the Bengal Tenancy Act, 1885 (Act VIII of 1885), Babu Profulla Chandra Moulik, Settlement Kanungo, is authorised to discharge, in the district of Bogra, the functions of a Revenue Officer, under Chapter X of that Act, so far as they relate to surveys and the preparation of record-of-rights.

Bogra.—No. 702L.R.—12th January 1935.—In exercise of the powers conferred by section 3 of the Bengal Land Revenue Settlement Regulation, 1825 (IX of 1825), read with section 20 of the Bengal Land Revenue Settlement Regulation, 1822 (VII of 1822), the Governor in Council is pleased to vest Babu Profulla Chandra Moulik, Settlement Kanungo, who has, by notification No. 103-C.P., dated the 4th January 1935, been vested by the Board of Revenue with the powers of a Collector in the estate of Babu Paramananda Sen and others, in the district of Bogra, for the purpose of the work of maintenance of the record-of-rights of that estate, with powers under section 19 of the said Bengal Land Revenue Settlement Regulation, 1822, within the local limits of that estate, to require and compel persons mentioned in the section to attend and produce accounts and other papers and to examine such persons under that section for the purpose of the said work of the maintenance of the record-of-rights.

24-Parganas - Khulna - Howrah.—No. 704-L.R.—12th January 1935.—Under the provisions of section 3 (*14*) of the Bengal Tenancy Act, 1885 (Act VIII of 1885), Babu Chanchala Charan Guha Thakurta, Kanungo, is authorised to discharge, in the districts of 24-Parganas, Khulna and Howrah, the functions of a Revenue Officer, under Chapter X of that Act, so far as they relate to surveys and the preparation of record-of-rights.

24-Parganas.—No. 709L.R.—12th January 1935.—In exercise of the powers conferred by section 3 of the Bengal Land Revenue Settlement Regulation, 1825 (IX of 1825), read with section 20 of the Bengal Land Revenue Settlement Regulation, 1822 (VII of 1822), the Governor in Council is pleased to vest Babu Haridas Mazumdar, Settlement Kanungo, who has, by notification No. 19162C.P., dated the 22nd December 1934, been vested by the Board of Revenue with the powers of a Collector in the estate of Babu Sarat Chandra Mitra in the district of 24-Parganas, for the purpose of the work of maintenance of the record-of-rights of that estate, with powers under section 19 of the said Bengal Land Revenue Settlement Regulation, 1822, within the local limits of that estate, to require and compel persons mentioned in the section to attend and produce accounts and other papers and to examine such persons under that section for the purpose of the said work of the maintenance of the record-of-rights.

Calcutta. — No. 719L.R. — 12th January 1935.—Under section 3 of the Calcutta Survey Act (Act I of 1887), Major C. B. Sexton, Officer in Charge, Bengal Traverse Party and Bengal Drawing Office, is appointed to be the Assistant Superintendent of Surveys for the purpose of carrying out the survey directed to be made under Government notification No. 13069L.R., dated the 7th December 1926.

Tippera - Noakhali - Dacca - Mymensingh-Faridpur - Bakarganj - Khulna - Nadia-Murshidabad - Rajshahi - Pabna.—No. 721-L.R.—12th January 1935.—Rai Romesh Chandra Sen Bahadur, Land Revenue Settlement Officer, Eastern Circle, is, in the interest of public service, also appointed to be the Land Revenue Settlement Officer in the district of Pabna in addition to his duties as Land Revenue Settlement Officer, Eastern Circle, in the districts of Tippera, Noakhali, Dacca, Mymensingh, Faridpur, Bakarganj, Khulna, Nadia, Murshidabad and Rajshahi, with effect from the date on which he joins his settlement duties in that district.

Pabna.—No. 722L.R.—12th January 1935.—Under the provisions of section 3 (*14*) of the Bengal Tenancy Act, 1885 (Act VIII of 1885), Rai Romesh Chandra Sen Bahadur, Land Revenue Settlement Officer, Eastern Circle, is also authorised to discharge, in the district of Pabna, the functions of a Revenue Officer, under Chapter X of that Act, so far as they relate to surveys and the preparation of record-of-rights.

He is also vested with the powers of a Settlement Officer, under Chapter VII, Part I, of the rules under the Bengal Tenancy Act, in respect of the aforesaid area.

Pabna.—No. 723L.R.—12th January 1935.—Under the provisions of section 3 (*2*) of the Bengal Tenancy Act, 1885 (Act VIII of 1885), Rai Romesh Chandra Sen Bahadur, Land Revenue Settlement Officer, Eastern Circle, is appointed to discharge the functions of a Collector, under section 58 of that Act, in the district of Pabna.

Pabna.—No. 724L.R.—12th January 1935.—Rai Romesh Chandra Sen Bahadur, Land Revenue Settlement Officer, Eastern Circle, is vested with the powers of a Revenue Officer, under section 108 of the Bengal Tenancy Act, 1885 (Act VIII of 1885), in the district of Pabna, for the purpose of revision of orders passed either by himself or by any other Revenue Officer under him, under sections 105, 105A, 106 or 107 of the said Act.

Pabna.—No. 725L.R.—12th January 1935.—In exercise of the powers conferred by section 115B of the Bengal Tenancy Act, 1885 (Act VIII of 1885), the Governor in Council is pleased to empower Rai Romesh Chandra Sen Bahadur, Land Revenue Settlement Officer, Eastern Circle, to make corrections in the record-of-rights prepared in respect of the lands in the district of Pabna, in accordance with, and subject to, the provisions of the said section.

Pabna.—No. 726L.R.—12th January 1935.—Rai Romesh Chandra Sen Bahadur, Land Revenue Settlement Officer, Eastern Circle, is vested with the powers of a Collector under—

(1) the Bengal Land Revenue Settlement Regulation, 1822 (VII of 1822),

(2) the Bengal Land Revenue Settlement Regulation, 1825 (IX of 1825),

(3) the Bengal Land Revenue Assessment (Resumed Lands) Regulation, 1828 (III of 1828), and

(4) the Bengal Land Revenue (Settlement and Deputy Collectors) Regulation, 1833 (IX of 1833),

to be exercised in the district of Pabna.

Pabna.—No. 727L.R.—12th January 1935.—In exercise of the powers conferred by section 35 of the Bengal Land Revenue Settlement Regulation, 1822 (Bengal Regulation VII of 1822), the Governor in Council is pleased to order that Rai Romesh Chandra Sen Bahadur shall exercise, in the district of Pabna, the authority of a Collector under the Bengal Land Revenue Assessment (Resumed Lands) Regulation, 1819 (Bengal Regulation II of 1819).

24-Parganas.—No. 730L.R.—12th January 1935.—In exercise of the powers conferred by sub-section (*3*) of section 158A of the Bengal Tenancy Act, 1885 (Act VIII of 1885), the Governor in Council is pleased to appoint the Certificate Officer, Alipore Sadar, to perform the functions of a Certificate Officer under the Bengal Public Demands Recovery Act, 1913, for the purposes of the said section and in respect of any arrear rent (including cess) in the subdivision of Barrackpore in the district of 24-Parganas due to the estates of Babu Hiran Kumar Bose of No. 48, Doctor Jagabandhu Lane, Calcutta.

Dacca-Mymensingh.—No. 736L R. — 12th January 1935.—Babu Probhat Chandra Sen, Sub-Deputy Collector and Assistant Settlement Officer, Dacca-Mymensingh, is allowed leave on average pay for a period of one month, with effect from the 23rd November 1934, under rule 81 (*b*) (*ii*) of the Fundamental Rules.

Malda.—No. 742L.R.—12th January 1935.—In exercise of the power conferred by sub-section (*1*) of section 115C of the Bengal Tenancy Act, 1885 (Act VIII of 1885), the Governor in Council is pleased to appoint Babu Rajendra Lal Chakrabarti, Subordinate Judge and Assistant Sessions Judge, Malda, to be a Special Judge in respect of the executive district of Malda for the purposes of hearing the appeals referred to in the said section.

Jessore.—No. 758L.R.—12th January 1935.—In exercise of the powers conferred by sub-section (*3*) of section 158A of the Bengal Tenancy Act, 1885 (Act VIII of 1885), the Governor in Council is pleased to appoint Babu Sukumar Chatterji, Deputy Collector, and Babu Harendra Lal Chatterjee, Sub-Deputy Collector in the district of Jessore, to perform the functions of Certificate Officers under the Public Demands Recovery Act, 1913 (Act III of 1913), for the purposes of the said section and in respect of the recovery of arrears of rent (including cesses) due to the estates (which lie in the district of Jessore) of Babu Sachi Prosanno Mukherjee and others, Zemindars of Gobardanga Chota Taraf in the district of the 24-Parganas.

Tippera.—No. 762L.R.—12th January 1935.—In exercise of the powers conferred by sub-section (*3*) of section 158A of the Bengal Tenancy Act, 1885 (Act VIII of 1885), the Governor in Council is pleased to appoint Babu Broja Nath Roy, Deputy Collector, Comilla, to perform the functions of a Certificate Officer under the Bengal Public Demands Recovery Act, 1913 (Bengal Act III of 1913), for the purpose of the said section in respect of recovery of arrears of rents (including cesses) due to the estate of late Govinda Sunder Sinha Choudhury in the district of Tippera.

Rangpur-Dinajpur-Mymensingh.—No. 393-L.R.—10th January 1935.—Mr. A. C. Hartley, I.C.S., Joint Magistrate and Deputy Collector, on leave, is appointed to be a Settlement Officer in the districts of Rangpur, Dinajpur and Mymensingh, with effect from the date on which he joins his settlement duties in those districts.

Rangpur-Dinajpur-Mymensingh.—No. 394-L.R.—10th January 1935.—Under the provisions of section 3(*14*) of the Bengal Tenancy Act, 1885 (Act VIII of 1885), Mr. A. C. Hartley, I.C.S., Settlement Officer of Rangpur, Dinajpur and Mymensingh, is authorised to discharge, in the districts of Rangpur, Dinajpur and Mymensingh, the functions of a Revenue Officer, under Chapter X of that Act, so far as they relate to surveys and the preparation of record-of-rights.

He is also vested with the powers of a Settlement Officer, under Chapter VII, Part I. of the rules under the Bengal Tenancy Act, in respect of the aforesaid areas.

Rangpur-Dinajpur-Mymensingh.—No. 395-L.R.—10th January 1935.—Under the provisions of section 3(*2*) of the Bengal Tenancy Act, 1885 (Act VIII of 1885), Mr. A. C. Hartley, I.C.S., Settlement Officer, Rangpur, Dinajpur and Mymensingh, is appointed to discharge the functions of a Collector, under section 58 of that Act, in the districts of Rangpur, Dinajpur and Mymensingh.

Rangpur-Dinajpur-Mymensingh.—No. 396-L.R.—10th January 1935.—Mr. A. C. Hartley, I.C.S., Settlement Officer, Rangpur, Dinajpur and Mymensingh, is vested with the powers of a Revenue Officer, under section 108 of the Bengal Tenancy Act, 1885 (Act VIII of 1885), in those districts, for the purpose of revision of orders passed either by himself or by any other Revenue Officer under him, under section 105, 105A, 106 or 107 of the said Act.

Rangpur-Dinajpur-Mymensingh.—No. 397-L.R.—10th January 1935.—In exercise of the powers conferred by section 115B of the Bengal Tenancy Act, 1885 (Act VIII of 1885), the Governor in Council is pleased to empower Mr. A. C. Hartley, I.C.S., Settlement Officer, Rangpur, Dinajpur and Mymensingh, to make corrections in the record-of-rights prepared in respect of the lands in those districts, in accordance with, and subject to, the provisions of the said section.

Rangpur-Dinajpur-Mymensingh.—No. 398-L.R.—10th January 1935.—Mr. A. C. Hartley, I.C.S., Settlement Officer, Rangpur, Dinajpur and Mymensingh, is vested with the powers of a Collector under—

(*1*) the Bengal Land Revenue Settlement Regulation, 1822 (VII of 1822),

(*2*) the Bengal Land Revenue Settlement Regulation, 1825 (IX of 1825),

(*3*) the Bengal Land Revenue Assessment (Resumed Lands) Regulation, 1828 (III of 1828), and

(*4*) the Bengal Land Revenue (Settlement and Deputy Collectors) Regulation, 1833 (IX of 1833),

to be exercised in those districts.

Rangpur-Dinajpur-Mymensingh.—No. 399-L.R.—10th January 1935.—In exercise of the powers conferred by section 35 of the Bengal Land Revenue Settlement Regulation, 1822 (Bengal Regulation VII of 1822), the Governor in Council is pleased to order that Mr. A. C. Hartley, I.C.S., shall exercise, in the districts of Rangpur, Dinajpur and Mymensingh, the authority of a Collector under the Bengal Land Revenue Assessment (Resumed Lands) Regulation, 1819 (Bengal Regulation II of 1819).

Dinajpur-Rangpur-Mymensingh.—No. 400-L.R.—10th January 1935.—Mr. F. O. Bell, I.C.S., Joint Magistrate and Deputy Collector, employed as Assistant Settlement Officer in charge of the districts of Rangpur, Dinajpur and Mymensingh, is appointed to be Assistant Settlement Officer in the districts of Dinajpur, Rangpur and Mymensingh, with effect from the date on which he is relieved of his present duties.

Dinajpur-Rangpur-Mymensingh.—No. 401-L.R.—10th January 1935.—Under the provisions of section 3(*14*) of the Bengal Tenancy Act, 1885 (Act VIII of 1885), Mr. F. O. Bell, I.C.S., is authorised to discharge, in the districts of Dinajpur, Rangpur and Mymensingh, the functions of a Revenue Officer, under Chapter X of that Act, so far as they relate to surveys and the preparation of record-of-rights.

He is also vested with the powers of an Assistant Settlement Officer, under Chapter VII, Part I, of the rules under the Bengal Tenancy Act, in respect of the aforesaid areas.

Land Acquisition.

NOTIFICATIONS.

Burdwan.—No. 691L.A.—12th January 1935.—Whereas it appears to the Governor in Council that land is likely to be required to be taken by Government at the public expense for a public purpose, viz., for constructing the road approaches to bridge at mile 4, chainage 47 and 15 feet, of distributary No. 6B, main canal, Damodar Canal Project, in the villages of Saligram and Nabastha, jurisdiction list Nos. 23 and 31, respectively, thana Memari, pargana Shahabad, district Burdwan, it is hereby notified that for the above purpose two pieces of land comprising parts of cadastral survey plot Nos. 2037-2039 in mauza Saligram and parts of cadastral survey plot Nos. 28, 174, 232, 234 and 235 in mauza Nabastha, and altogether measuring, more or less, 0·24 of an acre, are likely to be required within the aforesaid villages of Saligram and Nabastha.

This notification is made, under the provisions of section 4 of Act I of 1894, to all whom it may concern.

A plan of the land may be inspected in the office of the Special Land Acquisition Officer, Burdwan, as well as in that of the Executive Engineer, Damodar Canal Division, Burdwan.

In exercise of the powers conferred by the aforesaid section, the Governor in Council is pleased to authorise the officers for the time being engaged in the undertaking, with their servants and workmen, to enter upon and survey the land and do all other acts required or permitted by that section.

Any person interested in so much of the above land, as are not waste or arable, who has any objection to the acquisition thereof, may, within thirty days after the date on which public notice of the substance of this notification is given in the locality, file an objection in writing before the Collector of Burdwan.

In exercise of the powers conferred by section 17(*4*) of the Land Acquisition Act, I of 1894, as amended by Act XXXVIII of 1923, the Governor in Council is pleased to direct that the provisions of section 5A of the Act shall not apply to the waste or arable portion of the land in this case.

Dacca.—No. 694L.A.—12th January 1935.—The Governor in Council is pleased to cancel so much of the notification No. 3411L.A., dated the 16th March 1934, published under section 4 of the Land Acquisition Act, I of 1894, at page 462, Part I of the *Calcutta Gazette* of the 22nd idem, as relates to an area of 1·10 acres of land, comprising part of cadastral survey plot No. 555 of mauza Chandpur, out of the total area of 1·90 acres notified for acquisition and required for a beat house with foresters' quarters and forest guards' barrack at Chandpur, in the mauza of Chandpur, thana Kapasia, pargana Bhowal, district Dacca.

Mymensingh.—No. 706L.A.—12th January 1935.—Whereas it appears to the Governor in Council that land is likely to be required to be taken by Government partly at the public expense and partly at the expense of the authorities of the Pingna High English School for a public purpose, viz., for a playground of the Pingna High English School in the village of Pingna, jurisdiction list No. 63, thana Sarishabari, pargana Kagmari, district Mymensingh, it is hereby notified that for the above purpose a piece of land comprising cadastral plot No. 718 and portion of cadastral plot Nos. 722, 724, 725, 532 and 533, and measuring, more or less, 1·32 acres, is likely to be required within the aforesaid village of Pingna.

This notification is made, under the provisions of section 4 of Act I of 1894, to all whom it may concern.

A plan of the land may be inspected in the office of the Collector of Mymensingh.

In exercise of the powers conferred by the aforesaid section, the Governor in Council is pleased to authorise the officers for the time being engaged in the undertaking, with their servants and workmen, to enter upon and survey the land and do all other acts required or permitted by that section.

Any person interested in the above land, who has any objection to the acquisition thereof, may, within thirty days after the date on which public notice of the substance of this notification is given in the locality, file an objection in writing before the Collector of Mymensingh.

Bakarganj.—No. 711L.A.—12th January 1935.—Babu Pran Kumar Mukharji, Deputy Magistrate and Deputy Collector, in the district of Bakarganj, is vested with the powers of a Collector under the Land Acquisition Act, I of 1894, in that district.

Burdwan.—No. 733L.A.—12th January 1935.—Whereas it appears to the Governor in Council that land is likely to be required to be taken by Government at the public expense for a public purpose, viz., for constructing road approaches of the cart bridge at mile 4, chainage 4 and 88 feet of distributary No. 9, branch canal, Damodar Canal Project, in the village of Khurul, jurisdiction list No. 46, thana Bhatar, pargana, Burdwan, district Burdwan, it is hereby notified that for the above purpose two pieces of land comprising parts of cadastral survey plot No. 342 and altogether measuring, more or less, 0·03 of an acre, are likely to be required within the aforesaid village of Khurul.

This notification is made, under the provisions of section 4 of Act 1 of 1894, to all whom it may concern.

A plan of the land may be inspected in the office of the Special Land Acquisition Officer, Burdwan, as well as in that of the Executive Engineer, Damodar Canal Division, Burdwan.

In exercise of the powers conferred by the aforesaid section, the Governor in Council is pleased to authorise the officers for the time being engaged in the undertaking, with their servants and workmen, to enter upon and survey the land and do all other acts required or permitted by that section.

In exercise of the powers conferred by section 17(*4*) of the Land Acquisition Act, I of 1894, as amended by Act XXXVIII of 1923, the Governor in Council is pleased to direct that the provisions of section 5A of the Act shall not apply to this case.

Faridpur.—No. 740L.A.—12th January 1935.—Babu Kanai Lal Banarji, Subdivisional Officer, Gopalganj, in the district of Faridpur, is vested with the powers of a Collector under the Land Acquisition Act, I of 1894, in that subdivision.

24-Parganas.—No. 749L.A.—12th January 1935.—In exercise of the powers conferred by section 48(*1*) of the Land Acquisition Act, I of 1894, the Governor in Council is pleased to withdraw from the acquisition of more or less ·0176 of an acre of land, comprising portion of cadastral plot No. 1111 out of ·0341 of an acre of land notified for acquisition under declaration No. 1329L.A., dated the 6th February 1933, published at page 219, Part I of the *Calcutta Gazette* of the 9th idem, and required by the South Dum Dum Municipality for the improvement of Gorakshabashi Road, in the village of Satgachi, jurisdiction list No. 20, thana Dum Dum, pargana Calcutta, district 24-Parganas.

Birbhum.—No. 755L.A.—12th January 1935.—Whereas it appears to the Governor in Council that land in the district of Birbhum is likely to be needed for a public purpose, viz., for the construction of a road from Ellambazar to Suri, notice is hereby given to all whom it may concern that in exercise of the powers conferred by section 4 of the Land Acquisition Act I of 1894, the Governor in Council has authorised the engineers of the Public Works Department for the time being engaged on this undertaking to enter upon and survey land, and do all other acts required for the proper execution of their work as provided for or specified in the said section.

The general route to be taken for the survey will be from Ellambazar to Suri passing through the mauzas Khayerbani, jurisdiction list No. 123, Illambazar, jurisdiction list No. 95, Naoga, jurisdiction list No. 96, Kamaipur, jurisdiction list No. 97, Shabajpur, jurisdiction list No. 101, Nanasole, jurisdiction list No. 98, Chunpalasi jurisdiction list No. 100, Kayera, jurisdiction list No. 107, Padmabaty, jurisdiction list No. 35, Galtia, jurisdiction list No. 34, Maheswarpur, jurisdiction list No. 33, Hansra, jurisdiction list No. 28, Chowmandalpur, jurisdiction list No. 27, Raghaipur, jurisdiction list No. 26, Dhansaha, jurisdiction list No. 19, Srirampur,

jurisdiction list No. 21, in police-station Illambazar, and mauza Anantapur, jurisdiction list No. 153, Badpur, jurisdiction list No. 154, Babupur, jurisdiction list No. 155, Sehana, jurisdiction list No. 156, Sikarpur, jurisdiction list No. 161, Domaipur, jurisdiction list No. 158, Raypur, jurisdiction list No. 176, Sultanpur, jurisdiction list No. 171, Bholaipur, jurisdiction list No. 170, Srikantapur, jurisdiction list No. 172, Ushgram, jurisdiction list No. 62, Sajina, jurisdiction list No. 64, Purandarpur, jurisdiction list No. 70, Indragacha, jurisdiction list No. 68, Tapaipur, jurisdiction list No. 69, Haraipur, jurisdiction list No. 70, Jamal, jurisdiction list No. 75, Khosnatore, jurisdiction list No. 99, Suri, jurisdiction list No. 8, in police-station Suri, parganas Senbhum, Nainujial, Alinagar, Purandarpur and Khatanga extending about 30 miles in lengths and about 1,000 feet in width on either side of the alignment.

24-Parganas.—No. 791 L.A.—14th January 1935.—Whereas it appears to the Governor in Council that land is likely to be required to be taken by Government partly at the public expense and partly at the expense of the school authorities for a public purpose, viz., for the playground of the Barisha High English School, in the village of Mandalpara, jurisdiction list No. 6, thana Behala, pargana Magura, district 24-Parganas, it is hereby notified that for the above purpose a piece of land, comprising cadastral plots Nos. 115 and 120 and measuring, more or less, 1·01 acres, is likely to be required within the aforesaid village of Mandalpara.

This notification is made, under the provisions of section 4 of Act I of 1894, to all whom it may concern.

A plan of the land may be inspected in the office of the Land Acquisition Deputy Collector, 24-Parganas.

In exercise of the powers conferred by the aforesaid section, the Governor in Council is pleased to authorise the officers for the time being engaged in the undertaking, with their servants and workmen, to enter upon and survey the land and do all other acts required or permitted by that section.

Any person interested in the above land, who has any objection to the acquisition thereof, may, within thirty days after the date on which public notice of the substance of this notification is given in the locality, file an objection in writing before the Collector of 24-Parganas.

DECLARATIONS.

Calcutta.—No. 243L.A.—5th January 1935.—Whereas it appears to the Governor in Council that land is required to be taken by Government at the expense of the Calcutta Improvement Trust for a public purpose, viz., for Improvement Scheme No. XXXV (Eastern Park to Gorachand Road) in ward No. 20 of the Calcutta Municipality, in the city of Calcutta, it is hereby declared that for the above purpose a piece of land measuring, more or less, 21·8181 acres, bounded on the—

North—By Gorachand Road,

East—By premises No. 22, Gorachand Road, premises Nos. 74 and 73, Tiljala Road, municipal drain and premises No. 72, Tiljala Road,

South—By premises No. 21, Darga Road, Darga Road, surplus land of the Calcutta Improvement Trust and Kasaipara Lane,

West—By premises No. 8, Kasaipara Lane, premises No. 4, Gorachand Lane, municipal drain, premises No. 5/2, Gorachand Lane, Gorachand Lane, premises Nos. 7/1 and 10, Gorachand Lane, municipal drain and a common passage,

excluding public roads, lanes, drains, passages the bathing platform at No. 17/1, Gorachand Road, mosque, idgas and dargas, etc.,

is required within the aforesaid ward No. 20 of the Calcutta Municipality in the city of Calcutta.

This declaration is made, under the provisions of section 6, Act I of 1894, to all whom it may concern.

A plan of the land may be inspected in the office of the Second Land Acquisition Collector at No. 5, Bankshall Street, Calcutta.

Burdwan. — No. 529L.A.—10th January 1935.—Whereas it appears to the Governor in Council that land is required to be taken by Government at the public expense for a public purpose, viz., for brickfield in 3rd mile of Burdwan Arambag Road, in the village of Chak-Purohit, jurisdiction list No. 1, thana Rayna, pargana Khandghosh, district Burdwan, it is hereby declared that for the above purpose a piece of land comprising cadastral survey plot Nos. 3, 4, 9 and 69-92 and measuring, more or less, 9·70 acres, is required within the aforesaid village of Chak-Purohit.

This declaration is made, under the provisions of section 6, Act I of 1894, to all whom it may concern.

A plan of the land may be inspected in the office of the Special Land Acquisition Officer, Burdwan, as well as in that of the Executive Engineer, Burdwan Division, Hooghly.

Burdwan. — No. 532L.A.—10th January 1935.—Whereas it appears to the Governor in Council that land is required to be taken by Government at the public expense for a public purpose, viz., for constructing 1st mile and part of 2nd mile up to 3,296 feet of the Distributary No. 8A/1, Branch Canal, Damodar Canal Project, in the villages of Gramdihi and Dhandalsa, jurisdiction list Nos. 17 and 24, respectively, thana Bhatar, pargana Burdwan, district Burdwan, it is hereby declared that for the above purpose three pieces of land comprising cadastral plots Nos. 2714 and 3394 in

mauza Gramdihi and parts of cadastral survey plots Nos. 1 and 577 in mauza Dhandalsa and altogether measuring, more or less, 1·265 acres, are required within the aforesaid villages of Gramdihi and Dhandalsa.

This declaration is made, under the provisions of section 6, Act I of 1894, to all whom it may concern.

A plan of the land may be inspected in the office of the Special Land Acquisition Officer, Burdwan, as well as in that of the Executive Engineer, Damodar Canal Division, Burdwan.

Burdwan. — No. 535L.A.—10th January 1935.—Whereas it appears to the Governor in Council that extra land is required to be taken by Government at the public expense for a public purpose, viz., for the Branch Canal, Damodar Canal Project, from 19th mile chainage 41 and 77 feet to 22nd mile chainage 21 and 20 feet, in the village of Eruar, jurisdiction list No. 38, thana Bhatar, pargana Mazafarsahi, district Burdwan, it is hereby declared that for the above purpose nine pieces of land comprising cadastral plots Nos. 15760, 16024, 16039, 16224, 16271, 16277, 16305, 16343 and 16693 and altogether measuring, more or less, 0·28 of an acre, are required within the aforesaid village of Eruar.

This declaration is made, under the provisions of section 6, Act I of 1894, to all whom it may concern.

A plan of the land may be inspected in the office of the Special Land Acquisition Officer, Burdwan, as well as in that of the Executive Engineer, Damodar Canal Division, Burdwan.

Dacca.—No. 695L.A.—12th January 1935. —Whereas it appears to the Governor in Council that land is required to be taken by Government at the public expense for a public purpose, viz., for a beat house with foresters' quarters and forest guards' barrack at Chandpur, in the village of Chandpur, jurisdiction list No. 217, thana Kapasia, pargana Bhowal, district Dacca, it is hereby declared that for the above purpose a piece of land, comprising part of cadastral survey plot No. 555 and measuring, more or less 0·80 of an acre, is required within the aforesaid village of Chandpur.

This declaration is made, under the provisions of section 6 of Act I of 1894, to all whom it may concern.

A plan of the land may be inspected in the office of the Collector of Dacca.

Nadia.—No. 698L.A.—12th January 1935. —Whereas it appears to the Governor in Council that land is required to be taken by Government at the expense of the Santipur Municipality for a public purpose, viz., for an extension of the playground of the Sutragarh M. N. High English School in the village of Sutragarh, pargana Ukhra, zilla Nadia, it is hereby declared that for the above purpose three pieces of land comprising cadastral plot Nos. 1061, 1130 and part of plot No. 1076, and altogether measuring, more or less, 0·56 of an acre, are required within the aforesaid village of Sutragarh.

This declaration is made under the provisions of section 6 of Act I of 1894 to all whom it may concern.

A plan of the land may be inspected in the office of the Subdivisional Officer, Ranaghat.

Burdwan.—No. 713L.A.—12th January 1935.—Whereas it appears to the Governor in Council that land is required to be taken by Government at the expense of the Burdwan Municipality for a public purpose, viz., for public latrine and pale depot at Burdwan in the village of Burdwan, jurisdiction list No. 30, thana Burdwan, pargana Burdwan, district Burdwan, it is hereby declared that for the above purpose a piece of land comprising part of cadastral plot No. 311, and measuring, more or less, 0·181 of an acre, is required within the aforesaid village of Burdwan.

This declaration is made, under the provisions of section 6 of Act I of 1894, to all whom it may concern.

A plan of the land may be inspected in the office of the Special Land Acquisition Officer, Burdwan, as well as in that of the Chairman, Burdwan Municipality.

Burdwan.—No. 746L.A. — 12th January 1935.—Whereas it appears to the Governor in Council that land is required to be taken by Government at the public expense for a public purpose, viz., for constructing road approach of the head sluice of distributary No. 6H of the main canal, Damodar Canal Project, in the village of Faridpur, jurisdiction list No. 127, thana Burdwan, pargana Shahabad, district Burdwan, it is hereby declared that for the above purpose a piece of land comprising parts of cadastral survey plot Nos. 2604-2606 and 2609, measuring, more or less, 0·24 of an acre is required within the aforesaid village of Faridpur.

This declaration is made, under the provisions of section 6 of Act I of 1894, to all whom it may concern.

A plan of the land may be inspected in the office of the Special Land Acquisition Officer, Burdwan, as well as in that of the Executive Engineer, Damodar Canal Division, Burdwan.

Burdwan. — No. 752L.A.—12th January 1935.—Whereas it appears to the Governor in Council that land is required to be taken by Government at the public expense for a public purpose, viz., for constructing the portion from chainage 84,422 feet to chainage 96,089 feet of distributary No. 6, main canal, Damodar Canal Project, in the village of Chakdhalia, jurisdiction list No. 119, in thana

Burdwan, and in the villages of Unte and Mandalgram, jurisdiction list Nos. 6 and 7, respectively, thana Memari, pargana Shahabad, district Burdwan, it is hereby declared that for the above purpose four pieces of land comprising parts of cadastral survey plot No. 210 in mauza Chakdhalia, cadastral survey plot No. 849 and parts of cadastral survey plot Nos. 235, 240, 241, 244, 845, 846, 848, 1086 and 1096 in mauza Unte and part of cadastral survey plot No. 10351 in mauza Mandalgram and altogether measuring, more or less, 1·40 acres, are required within the aforesaid villages of Chakdhalia, Unte and Mandalgram.

This declaration is made, under the provisions of section 6 of Act I of 1894, to all whom it may concern.

A plan of the land may be inspected in the office of the Special Land Acquisition Officer, Burdwan, as well as in that of the Executive Engineer, Damodar Canal Division, Burdwan.

Burdwan.—No. 788 L.A.—14th January 1935.—Whereas it appears to the Governor in Council that land is reuqired to be taken by Government at the public expense for a public purpose, viz., for constructing road approaches to cart bridge at mile 19, chainage 3 and 43 feet, of Distributary No. 6 of the main canal, Damodar Canal Project, in the villages of Mandalgram and Barapalashan, jurisdiction list Nos. 7 and 8, respectively, thana Memari, pargana Shahabad, district Burdwan, it is hereby declared that for the above purpose four pieces of land comprising parts of cadastral survey plot Nos. 7192, 7193, 7197 and 7198 in mauza Mandalgram and parts of cadastral survey plot Nos. 19-22 in mauza Barapalashan, and altogether measuring, more or less, 0·28 of an acre, are required within the aforesaid villages of Mandalgram and Barapalashan.

This declaration is made, under the provisions of section 6 of Act I of 1894, to all whom it may concern.

A plan of the land may be inspected in the office of the Special Land Acquisition Officer, Burdwan, as well as in that of the Executive Engineer, Damodar Canal Division, Burdwan.

Excluded Area.

NOTIFICATIONS.

Darjeeling.—No. 716Ex.A. — 12th January 1935.—Whereas the Government of Bengal are satisfied that certain areas in the district of Darjeeling are visited by or threatened with an outbreak of the dangerous epidemic disease known as *Kala-azar* and that the ordinary provisions of the law are insufficient for the purpose of preventing the outbreak of such disease or the spread thereof:

Now, therefore, in exercise of the power conferred by section 2A read with sub-section (*1*) of section 2 of the Epidemic Diseases Act, 1897 (III of 1897), the Governor in Council is pleased to prescribe the following regulations which shall remain in force till the 31st December 1935, for the prevention of the outbreak of *Kala-azar* or the spread thereof in the said district:—

Temporary Regulations under the Epidemic Diseases Act, 1897, for the prevention of the outbreak of Kala-azar or the spread thereof in the Darjeeling district.

1. In these regulations unless there is anything repugnant in the subject or context—

(*1*) "authorised Medical Officer" means the Civil Surgeon, the District Health Officer or any duly qualified medical practitioner specially authorised by the district board to take action under these regulations;

(*2*) "Magistrate" means the Deputy Commissioner or a Subdivisional Officer.

Notices.

2. Whenever any land or building is held jointly by two or more persons, whether as owners or occupiers of that land or building, such persons shall be held jointly and severally liable for carrying out any measure ordered in a notice under these regulations, and the names of any one or more of such joint-holders may be entered upon such notice at the discretion of the Officer who issues it. Such Officer shall not be bound to enter the names of all the joint-holders in the notice.

Cost and compensation.

3. (*1*) All expenses incurred in carrying out any work required to be done in pursuance of an order issued under these regulations shall be paid by the district board.

(*2*) When action has been taken under regulation 5 or regulation 6 as a result of a declaration made by an authorized Medical Officer, the district board shall pay adequate compensation, to be assessed by the Magistrate, to any person who has sustained substantial loss or damage by reason of a measure

taken under either of those regulations, and the Magistrate shall not, except on a declaration made by the District Health Officer, issue an order under clause (*b*) or clause (*c*) of regulation 5 or sub-regulation (*2*) of regulation 6 unless he is satisfied that adequate provision for such compensation will be made by the district board or by some other body:

Provided that no person shall receive any compensation for anything done or suffered under these regulations, if he has failed to carry out an order issued under these regulations within the time specified in the order and to the satisfaction of the Magistrate.

(*3*) If in any case any expense is incurred or any compensation is paid by the district board in carrying out any measure under these regulations for the benefit of tea estates, the Deputy Commissioner may by an order in writing direct the owner of the tea estates to contribute the whole or such part of the cost as may be assessed by the Magistrate.

Location of the disease.

4. Any person upon whom an authorised Medical Officer has issued orders to this effect in writing shall submit himself to such medical examination as the Medical Officer may consider to be necessary for the purpose of ascertaining whether such person is suffering from *Kala-azar*.

Isolation, evacuation of houses and treatment.

5. If any person is declared by an authorised Medical Officer to be suffering from *Kala-azar* the Magistrate may by a notice in writing direct—

(*a*) that such person shall undergo a complete course of curative treatment, either as an out-patient or as an in-patient at a free hospital, if he is satisfied that there is provision for compensation under rugulation 3;

(*b*) that the house in which such person has been residing and all or any of his clothes and all or any of the contents of the house shall be disinfected or destroyed within the time stated in the notice, and the house and its surroundings shall be kept clean to the satisfaction of the authorised Medical Officer; and

(*c*) that any of the inmates of the house in which such person has been residing shall forthwith reside at a place approved by the said Magistrate:

Provided that if the person suffering from *Kala-azar* is a child below the age of 14 years the parent or guardian of the child shall be required to produce the child for treatment under sub-clause (*a*) or to carry out the destruction of the clothes of the patient.

6. (*1*) If any area in the district of Darjeeling is declared by an authorised Medical Officer to be visited by or threatened with an outbreak of *Kala-azar* the Deputy Commissioner may by an order in writing direct that—

(*a*) no person resident within such area shall without the permission of the Magistrate migrate from such area with the purpose of, or with the effect of, ceasing to reside therein, and

(*b*) no person residing on a tea garden shall visit such area.

(*2*) The Deputy Commissioner may in the same or in a subsequent order direct that all persons resident within such area shall within a time to be fixed in the order leave such area and reside outside it for a period to be fixed in the order.

Miscellaneous powers.

7. Any authorised Medical Officer may enter upon any tea estate or other land and may after two hours' notice in writing enter any premises or building used for human habitation at all reasonable times for the purpose of making any enquiry or medical examination or carrying out any other measure authorised by these regulations.

8. If any measure which a Magistrate has by a notice issued under these regulations, required to be carried out, be not carried out to his satisfaction within the time stated in the notice, he may cause it to be carried out by an agency which he may think fit, and in the event of some other agency carrying out the measures, the Magistrate may at his discretion direct that the expenses thus incurred shall be paid by the person or persons who failed to carry out his orders.

Darjeeling.—No. 215Ex.A.—4th January 1935.—Under rule 7 of the Local Authorities Loan Rules, 1915, as subsequently amended, the following applications of the Darjeeling Municipality for a loan of Rs. 85,000 from the Imperial Bank of India and a loan of Rs. 1,95,000 from Government, are published for general information.

2. Any objections to the said loan applications should be preferred to the Local Government within one month from the date of publication of this notification.

Application from the Commissioners of the Darjeeling Municipality for a loan of Rs. 85,000.

The work or works for which the loan is required and the estimate of the cost thereof.	The amount which it is proposed to borrow.	The fund or funds on the security of which it is proposed to borrow.	The law or laws under which the said fund or funds is or are levied, received or held.	Receipt of loan. (a) The period for which the loan is required.	(b) The rate of interest at which it is proposed to borrow.	(c) The number of instalments in which it is proposed that the loan should be taken.	(d) The amount of each instalment.	(e) The date proposed for receiving each.	Repayment of loan. (f) The number of instalments in which the loan is repayable and the date of payment thereof.	(g) Amount of each instalment.
1	2	3	4	5	6	7	8	9	10	11
undertakings. section .. .. Rs. 11,500; Rs. 1,90,000) .. .. 1,90,000; (total) 2,01,500; revenue .. .. 6,500; (balance) 1,95,000	from the Imperial Bank of India).	Fund.	(B. C. Act III of 1884).	months.	per cent.		85,000.	1935.		Rs. 85,000 *plus* interest Rs. 2,656-4.

Financial position of the local body.

Revenue (details of the preceding three years). Sources from which the revenue is derived.	Amount for— 1931-32.	1932-33.	1933-34.	Expenditure (details of the preceding three years). Objects on which the expenditure is incurred.	Amount for— 1931-32.	1932-33.	1933-34.	The normal surplus which may be expected in future, *i.e.*, difference between the average ordinary expenditure calculated on the figures in columns 13 to 15 and 17 to 19, respectively.
12	13	14	15	16	17	18	19	20
	Rs.	Rs.	Rs.		Rs.	Rs.	Rs.	Rs.
(a) Municipal rates and taxes—				(1) General administration and collection charges.	54,035	53,806	57,400	
(1) Tax on holdings or persons (98 per cent. of demand).	1,17,860	1,18,615	1,19,526	(2) Public safety ..	58,236	56,419	60,416	
(2) Water rate (98 per cent. of demand.)	46,077	46,350	46,731	(3) Public health and convenience (excluding capital outlay on water-supply or drainage, the cost of constructing new roads and buildings, and special expenditure met out of non-recurring grants for donations)—				
(3) Miscellaneous ..	11,245	7,564	7,732					
(4) Latrine fees (98 per cent. of demand).	43,014	43,136	43,337					
(5) Lighting rate (98 per cent. of demand).	38,197	38,381	38,672	(i) Water-supply (establishment and repairs).	9,458	10,039	18,767	
(6) Tax on animals and vehicles.	1,093	1,145	1,191	(ii) Drainage (establishment and repairs).	2,653	1,742	3,727	
(7) Tax on professions and trades.	565	505	427					
(b) Realizations under special Acts.	588	496	459	(iii) Conservancy, etc. (heads 3 to 13 in account form No. 1).	1,33,724	1,30,825	1,38,846	
(c) Revenue derived from municipal property and powers apart from taxation (excluding sale-proceeds of land).*	2,94,021	2,73,949	2,59,019	(iv) Public Works (establishment, repairs and tools and plant).	92,545	93,382	1,06,265	
				(4) Public instruction ..	6,407	4,641	5,657	
(d) Grants and contribution—recurring.	13,120	12,902	11,591	(5) Contributions—recurring	9,570	10,471	11,435	
(e) Miscellaneous (details of individual items exceeding Rs. 1,000 to be furnished in the remarks column.)	3,405	4,857	7,438	(6) Miscellaneous (individual items exceeding Rs. 1,000 to be detailed in the remarks column.)	41,117	41,521	45,157	
				(7) Repayment of loan ..	34,077	29,416	14,685	
Total ordinary income ..	5,69,185	5,47,900	5,36,123	(X) Total ordinary expenditure.	4,41,822	4,32,262	4,62,355	1,05,580

Modernizing Hydro-electric

(A) For completion of the second
(B) For the third section (estimated amount

Deduct—To be met from

Rs. 85,000 (short term loan to be raised in 1934-35

Dujeeli... Municipal

Bengal Municipal Act, 1884

For 6

6‡

One.

Ha.

2nd January

One.

One instalment—Principal

(f) Extraordinary and debt						(3) Extraordinary and debt excluding repayment of loans.				
(g) Receipts of abnormal character—						(i) Capital outlay on—				
(1) Sale-proceeds of land	..	..	..			(a) Market ..	13,291	8,427	11,757	
(2) Grants and contributions (non-recurring or special).	1,83,504	5,059	4,352			(b) Dispensary ..	..	6,278	..	
(3) Other items ..	..	..	..			(c) Water-supply ..	1,31,373	40,606	26,772	
Excess collection largely due to arrear collection—						(d) Latrine ..	3,532	1,857	6,150	
(a) Tax on holdings or persons.	13,252	256	743			(e) Drainage ..	2,554	237	4,085	
(b) Water rate ..	5,629	318	(−) 42‡			(f) Arboriculture ..	..	3,498	423	
(c) Latrine fees ..	6,101	528	386			(g) Buildings and roads (new works).	..	8,000	7,886	
(d) Lighting rate ..	4,793	352	(−) 64‡			(h) Tower clock ..	..	..	6,961	
(e) Revenue derived from municipal properties, etc.	31,668	26,969	33,452			(i) Electric installation ..	11,008	73,256	62,091	
						(j) Victoria Hospital ..	..	..	12,000†	
						(ii) Other expenditure from special grants or donations.	1,33,404	..	..	
						(Y) Total (i) and (ii) ..	3,45,162	1,42,159	1,38,125	
						Deduct—Expenditure out of loans, special grants or donations (*vide* Account No. 72).	1,33,404	..	..	
						Net capital expenditure met out of revenue.	1,61,758	1,42,159	1,38,125	
						Total of (X), (3) and (Y) ..	3,96,151	6,11,713	6,56,829	
						Closing balance—				
						Special funds—				
						(a) Water ..	12,167	4,220	1,758	
						(b) Lighting ..	52,494	50,333	47,016	
Total ..	9,12,294	5,91,276	5,99,339			(c) Latrine ..	35,357	44,589	59,179	
Opening balance ..	2,17,696	2,43,839	2,23,402			Revenue Fund ..	1,43,821	1,24,260	57,959	
Grand Total ..	11,29,990	8,35,115	8,22,741			Grand Total ..	11,29,990	8,35,115	8,22,741	

*Only receipts up to 90 per cent. of demand of municipal properties and 93 per cent. of demand of electric installation have been shown as ordinary.
†To construct medical officer's quarters. ‡Collection below 98 per cent. of current demand.

(a) Interest on loans ..	Rs. 22,115	(b) Interest on loans ..	Rs. 20,547	(c) Interest on loans ..	Rs. 19,313
Actual cost of work done for private individuals.	2,020	Actual cost of work done for private individuals.	1,884	Actual cost of work done for private individuals.	1,133
Printing charges ..	3,488	Printing charges ..	2,307	Printing charges ..	8,267
Law charges ..	4,992	Law charges ..	4,073	Law charges ..	4,210
Provident Fund ..	6,832	Provident Fund ..	7,637	Provident Fund ..	7,491
Miscellaneous ..	1,126	Election ..	2,077	Miscellaneous ..	4,252
		Miscellaneous ..	2,334		

Application from the Commissioners of the Darjeeling Municipality for a loan of Rs. 1,95,000.

1	2	3	4	5	6	7	8	9	10	11
				Receipt of loan.					Repayment of loan.	
				(a)	(b)	(c)	(d)	(e)	(f)	(g)
The work or works for which the loan is required and the estimate of the cost thereof.	The amount which it is proposed to borrow.	The fund or funds on the security of which it is proposed to borrow.	The law or laws under which the said fund or funds is or are levied, received or held.	The period for which the loan is required.	The rate of interest at which it is proposed to borrow.	The number of instalments in which it is proposed that the loan should be taken.	The amount of each instalment.	The date proposed for receiving each.	The number of instalments in which the loan is repayable and the date of payment thereof.	Amount of each instalment.
undertakings.										
section .. .. Rs. 11,500										
amount Rs. 1,90,066) 1,90,000										
revenue 2 01,500										
6,500										
1,95,000										
		cipal Fund.	1884 (B. C. Act III of 1884).	and another for 19 years.	per annum.	instalments.	(2) Rs. 78,000.	(2) on 2nd January 1936.	(2) 38 half-yearly instalments.	and (2) Rs. 2,950-0-1.

Financial position of the local body.

Revenue (details of the preceding three years).				Expenditure (details of the preceding three years).				The normal surplus which may be expected in future, *i.e.*, difference between the average ordinary expenditure calculated on the figures in columns 13 to 15 and 17 to 19, respectively.
Sources from which the revenue is derived.	Amount for— 1931-32.	1932-33.	1933-34.	Objects on which the expenditure is incurred.	Amount for— 1931-32.	1932-33.	1933-34.	
12	13	14	15	16	17	18	19	20
	Rs.	Rs.	Rs.		Rs.	Rs.	Rs.	Rs.
(a) Municipal rates and taxes—				(1) General administration and collection charges.	54,035	53,806	57,400	
(1) Tax on holdings or persons (98 per cent. of demand).	1,17,860	1,18,615	1,19,526	(2) Public safety ..	58,236	56,419	60,416	
(2) Water rate (98 per cent. of demand).	46,077	46,350	46,781	(3) Public health and convenience (excluding capital outlay on water-supply or drainage, the cost of constructing new roads and buildings, and special expenditure met out of non-recurring grants for donations)—				
(3) Miscellaneous ..	11,245	7,564	7,732					
(4) Latrine fees (98 per cent. of demand).	43,014	43,136	43,337					
(5) Lighting rate (98 per cent. of demand).	38,197	38,381	38,672					
(6) Tax on animals and vehicles.	1,093	1,145	1,191	(i) Water-supply (establishment and repairs).	9,458	10,039	18,767	
				(ii) Drainage (establishment and repairs).	2,653	1,742	3,727	
(7) Tax on professions and trades.	565	505	427	(iii) Conservancy, etc. (heads 3 to 13 in account form No. 1).	1,33,724	1,30,825	1,38,846	
(b) Realizations under special Acts.	588	496	459	(iv) Public works (establishment, repairs and tools and plant).	92,545	93,382	1,06,265	
(c) Revenue derived from municipal property and powers apart from taxation (excluding sale-proceeds of land.)*	2,94,021	2,73,949	2,59,019	(4) Public instruction ..	6,407	4,641	5,657	
				(5) Contributions—recurring	9,570	10,471	11,435	
(d) Grants and contribution—recurring.	13,120	12,902	11,591	(6) Miscellaneous (individual items exceeding Rs. 1,000 to be detailed in the remarks column).	41,117	41,521	45,157	
(e) Miscellaneous (details of individual items exceeding Rs. 1,000 to be furnished in the remarks column).	3,405	4,857	7,438	(7) Repayment of loan ..	34,077	29,416	14,685	
Total ordinary income ..	5,69,185	5,47,900	5,36,123	(X) Total ordinary expenditure.	4,41,822	4,32,262	4,62,355	1,05,589

Modernising Hydro-electric

(A) For completion of the second
(B) For third section (estimated

Deduct—To be met from

Rs. 1,02,000.

Darjeeling Muni-

Bengal Municipal Act,

One for 194 years

4 per cent.

Two

(1) Rs. 1,17,000 and

(1) On 2nd July 1935 and

(1) 39 half-yearly instalments and

(1) Rs. 4,349-0-4

(*f*) Extraordinary and debt	92,162	9,394	24,389	(5) Extraordinary and debt, excluding repayment of loans.	99,167	37,292	56,349		
(*g*) Receipts of abnormal character—				(6) Capital outlay on—					
(1) Sale-proceeds of land	..	..	..	(a) Market	13,291	8,427	11,757		
(2) Grants and contributions (non-recurring or special).	1,89,504	5,059	4,352	(b) Dispensaries ..	..	6,278	..		
(3) Other items ..	..	..	..	(c) Water-supply ..	1,31,373	40,606	26,772		
Excess collection largely due to arrear collection—				(d) Latrine	3,532	1,857	6,150		
(a) Tax on holdings or persons.	13,252	256	743	(e) Drainage	2,554	237	4,085		
(b) Water rate ..	5,629	318	(−) 42‡	(f) Arboriculture ..	..	3,493	423		
(c) Latrine fees ..	6,101	528	386	(g) Buildings and roads (new works).	..	8,000	7,886		
(d) Lighting rate ..	4,793	352	(−) 64‡	(h) Tower clock ..	..	..	6,961		
(e) Revenue derived from Municipal properties, etc.	31,663	20,969	33,452	(i) Electric installation ..	11,008	73,256	62,091		
				(j) Victoria Hospital ..	..	..	12,000†		
				(ii) Other expenditure from special grants or donations.	1,83,404	..	..		
				(Y) Total (i) and (ii) ..	3,45,162	1,42,159	1,33,125		
				Deduct—Expenditure out of loans, special grants or donations (*vide* Account No. 72).	1,83,404	..	..		
				Net capital expenditure met out of revenue.	1,61,758	1,42,159	1,33,125		
				Total of (X), (3) and (Y) ..	8,86,151	6,11,713	6,56,829		
				Closing balance—					
				Special funds—					
				(a) Water	12,167	4,220	1,758		
				(b) Lighting	52,494	50,333	47,016		
Total ..	9,12,294	5,91,276	5,99,339	(c) Latrine	35,357	44,589	59,179		
				Revenue Fund ..	1,43,821	1,24,260	57,959		
Opening balance ..	2,17,696	2,43,839	2,23,402						
Grand Total ..	11,29,990	8,35,115	8,22,741	Grand Total ..	11,29,990	8,35,115	8,22,741		

*Only receipts up to 90 per cent. of demand of municipal properties and 98 per cent. of electric installation have been shown as ordinary.
†To construct medical officers' quarters. ‡Collection below 98 per cent. of current demand.

	Rs.		Rs.		Rs.
(a) Interest on loans ..	22,115	(b) Interest on loans ..	20,547	(e) Interest on loans ..	19,313
Actual cost of work done for private individuals.	2,020	Actual cost of work done for private individuals.	1,884	Actual cost of work done for private individuals.	1,133
Printing charges ..	3,488	Printing charges ..	2,907	Printing charges ..	8,267
Law charges ..	4,992	Law charges ..	4,073	Law charges ..	4,210
Provident Fund ..	6,832	Provident Fund ..	7,637	Provident Fund ..	7,491
Miscellaneous ..	1,126	Election ..	2,077	Miscellaneous ..	4,252
		Miscellaneous ..	2,334		

(*a*) The ordinary surplus is ample to meet the charges of the proposed loan.

(*b*) When the capital works under contemplation are provided for by the proposed loan, it is intended to effect an immediate *reduction* of taxation to the extent of about Rs. 32,000 per year. Even if the proved surplus of a lakh were to disappear, reimposition of taxes at the present rate would yield enough to liquidate the entire loan.

The taxes mentioned in column 12 are levied at the following rates :—

	Per cent.	
Holding tax ..	9	on the annual valuation.
Water rate ..	3¾	ditto.
Lighting rate ..	3	ditto.
Latrine rate ..	8	ditto of 1st hundred.
	3	ditto of 2nd hundred.
	2	ditto of 3rd to 6th hundred.
	3⅛	ditto above 6th hundred.

(*c*) Statement of outstanding loans is appended hereto.

(*d*) The figures in the loan applications have been carefully analysed in order to show nothing but strictly normal income and expenditure under normal heads.

Thus although there have been heavy excess receipts due to arrear collection all collections (*a*) over 98 per cent. of taxes and electric dues and (*b*) over 90 per cent. of property demand have been excluded and shown as abnormal income.

Statement of outstanding loans.

Original amount of loan.	Date when taken.	Rate of interest.	Purpose.		Annual charges by equated payments.	Number of half-yearly payments made.	Number of half-yearly payments to be made.	Capital outstanding on 1st April 1934.	Date of final clearance.
Rs.				Rs.	Rs. a. p.			Rs. a. p.	
1. 1,00,000	1st February 1922.	7 per cent.	(1) Boys' school ..	45,000	16,035 8 0	24	36	1,63,483 7 1	28th February 1952.
1,00,000	1st March 1922.		(2) Sweepers' barrack .	40,000					
			(3) Infectious hospital ..	25,000					
			(4) Workshop block ..	53,500					
			(5) Menials' quarters ..	6,500					
			(6) Roads in Lower Beechwood.	10,000					
			(7) Purchase money of Lower Beechwood Estate.	20,000					
2. 1,60,000	31st March 1921.	6 per cent.	(1) Purchase of Lower Beechwood Estate.	1,35,000	11,562 10 0	26	34	1,22,167 13 9	31st March 1951.
			(2) Lining Senchal Lake	25,000					

Jurisdiction.

NOTIFICATIONS.

Bakarganj. — No. 287Jur.—9th January 1935.—In exercise of the power conferred by sub-section (*1*) of section 8 of the Code of Criminal Procedure, 1898 (Act V of 1898), and in supersession of all previous notifications on the subject relating to the area included within the Sadar subdivision of the Bakarganj district, and to the boundaries of that area, the Governor in Council is pleased to declare that the limits of that subdivision shall include the local areas of the following police-stations :—

(1) Nalchiti police-station—Notification No. 109, dated the 27th August 1874.

(2) Jhalakati police-station — Notifications No. 1527P.J., dated the 1st April 1920, and No. 4970Pl., dated the 6th September 1933.

(3) Rajapur police-station—Notification No. 1526P.J., dated the 1st April 1920.

(4) Bakarganj police-station — Notification No. 109, dated the 27th August 1874.

(5) Barisal police-station—Notifications No. 3765P., dated the 24th April 1913, No. 725-P.J., dated the 19th February 1918, and No. 189Pl., dated the 18th January 1923.

(6) Babuganj police-station — Notifications No. 3764P., dated the 24th April 1913, and No. 724P.J., dated the 19th February 1918.

(7) Gaurnadi police-station — Notifications No. 9369P., dated the 20th December 1913, and No. 1938P.J., dated the 25th June 1918.

(8) Muladi police-station—Notifications No. 5380J., dated the 12th December 1899, No. 4403J., dated the 8th September 1904, No. 9370P., dated the 20th December 1913, No. 1938P.J., dated the 25th June 1918, No. 189Pl., dated the 18th January 1923, No. 5210Pl., dated the 7th December 1926, and No. 1307Pl., dated the 7th March 1928.

(9) Uzirpur police-station — Notifications No. 9371P., dated the 20th December 1913, and No. 4970Pl., dated the 6th September 1933.

(10) Mehendiganj police-station — Notifications No. 109, dated the 27th August 1874, Nos. 189Pl. and 190Pl., dated the 18th January 1923, and No. 1308Pl., dated the 7th March 1928.

(11) Hizla police-station — Notifications No. 1308Pl., dated the 7th March 1928, and No. 7155Pl., dated the 31st December 1934.

Faridpur.—No. 288Jur.—9th January 1935. —In exercise of the power conferred by sub-section (*1*) of section 8 of the Code of Criminal Procedure, 1898 (Act V of 1898), and in supersession of all previous notifications relating to the area included within the Madaripur subdivision of the Faridpur district, and to the boundaries of that area, the Governor in Council is pleased to declare that the limits of that subdivision shall include the local areas of the following police-stations:—

(1) Madaripur police-station—Notification No. 1326P., dated the 24th January 1916.

(2) Rajair police-station — Notification No. 1328P., dated the 24th January 1916.

(3) Kalkini police-station — Notifications No. 1327P., dated the 24th January 1916, and No. 5210Pl., dated the 7th December 1926.

(4) Sibchar police-station — Notifications No. 10534P., dated the 9th November 1914, No. 15612P., dated the 11th December 1917, No. 3364Pl., dated the 14th September 1922, No. 3525Pl., dated the 12th October 1922, No. 5948Pl., dated the 2nd December 1927, No. 2168Pl., dated the 12th April 1934, and Nos. 4578-79Pl., dated the 23rd August 1934.

(5) Janjira police-station — Notifications No. 10535P., dated the 9th November 1914, Nos. 3618P.J. and 3620P.J., dated the 17th October 1919, No. 1901Pl., dated the 18th May 1922, No. 3364Pl., dated the 14th September 1922, No. 1568Pl., dated the 8th May 1924, No. 2622Pl., dated the 25th October 1934, Nos. 104Pl. and 106Pl., dated the 16th January 1925, No. 2572Pl., dated the 10th July 1925, Nos. 5945Pl. and 5948Pl., dated the 2nd December 1927, Nos. 1178Pl. and 1179Pl., dated the 25th February 1932, and Nos. 4577-Pl. and 4579Pl., dated the 23rd August 1934.

(6) Palong police-station — Notifications No. 1151J., dated the 14th April 1913, No. 15611P., dated the 11th December 1917, No. 1725P.J., dated the 14th May 1918, and No. 3618P.J., dated the 17th October 1919.

(7) Gosairhat police-station — Notifications No. 109, dated the 27th August 1874, No. 494-J.D., dated the 26th April 1905, Nos. 1725-P.J. and 1726P.J., dated the 14th May 1918, No. 383Pl., dated the 4th February 1925, No. 1516Pl., dated the 21st March 1929, and No. 7155Pl., dated the 31st December 1934.

(8) Bhedarganj police-station — Notifications No. 109, dated the 27th August 1874, No. 494J.D., dated the 26th April 1905, No. 15611P., dated the 11th December 1917, Nos. 1725P.J. and 1726P.J., dated the 14th May 1918, No. 1725P.J., dated the 20th May 1919, No. 5123Pl., dated the 18th October 1927, No. 5946Pl., dated the 2nd December 1927, No. 95Pl., dated the 7th January 1931, No. 1178Pl., dated the 25th February 1932, No. 5354Pl., dated the 2nd November 1932, and No. 4580Pl., dated the 23rd August 1934.

(9) Naria police-station—Notifications No. 15611P., dated the 11th December 1917, No. 2352P.J., dated the 13th August 1918, No. 1094Pl., dated the 7th March 1930, and No. 5354Pl., dated the 2nd November 1932.

Miscellaneous.

NOTIFICATIONS.

No. 409Misc.—10th January 1935. — The following amenments are made to the rules regarding territorial and political pensions published with the Board's notification No. 2258Misc., dated the 7th July 1914, at pages 1278 and 1280 of Part I of the *Calcutta Gazette* of the 8th July 1914, as amended by the Revenue Department notification No. 1550Misc., dated the 29th January 1932:—

(1) *For* the words "Accountant-General, Bengal," in paragraph 1 of rule VII, *substitute* the words "Government in the Political Department."

(2) *Substitute* the following *for* paragraph 1 of rule XI:—

"On the death of a pensioner, payment of any arrear actually due may be made to his heirs provided that they apply within one year from his death, after which period no such payment shall be made without the sanction of the Accountant-General, Bengal."

No. 138Misc.—4th January 1935.—The following schedule of normal rates of cheapest rice in Bengal for the quinquennial period ending the 31st December 1934, prepared by the Director of Agriculture, is published for general information, as directed in section 4(*3*) of the Bengal Famine Code, 1913 :—

Schedule of normal rates of prices (number of seers for a rupee) of cheapest rice in Bengal, as deduced from prices current in the five years ending 31st December 1934.

Prepared by the Department of Agriculture, Bengal, from returns furnished by District Officers, with reference to section 4(*3*) of the Revised Bengal Famine Code of 1913.

Schedule of normal rates of prices (number of seers for a rupee) of cheapest rice in Bengal.

District and mart.		Cheapest rice.											
		For last day or last market day of January.			For last day or last market day of April.			For last day or last market day of July.			For last day or last market day of October.		
		Normal rate.	20 per cent. above normal rate.	40 per cent. above normal rate.	Normal rate.	20 per cent. above normal rate.	40 per cent. above normal rate.	Normal rate.	20 per cent. above normal rate.	40 per cent. above normal rate.	Normal rate.	20 per cent. above normal rate.	40 per cent. above normal rate.
1		2	3	4	5	6	7	8	9	10	11	12	13
Burdwan ..	Burdwan ..	11	9	8	12	10	9	11	9	8	11	9	8
	Kalna ..	11	9	8	11	9	8	11	9	8	11	9	8
Birbhum ..	Suri ..	13	11	9	13	11	9	12	10	9	13	11	9
	Rampur Hat ..	14	12	10	14	12	10	13	11	9	13	11	9
Bankura ..	Bankura ..	14	12	10	14	12	10	12	10	9	13	11	9
	Vishnupur ..	13	11	9	12	10	9	12	10	9	13	11	9
Midnapore ..	Midnapore ..	16	13	11	13	11	9	13	11	9	13	11	9
	Contai ..	14	12	10	14	12	10	13	11	9	13	11	9
Hooghly ..	Hooghly ..	12	10	9	12	10	9	12	10	9	12	10	9
	Arambagh ..	14	12	10	13	11	9	13	11	9	13	11	9
Howrah ..	Howrah ..	12	10	9	11	9	8	12	10	9	11	9	8
	Uluberia ..	12	10	9	13	11	9	12	10	9	12	10	9
Calcutta ..	Baliaghata ..	9	8	6	10	8	7	10	8	7	10	8	7
24-Parganas	Chetla Hat ..	11	9	8	12	10	9	11	9	8	11	9	8
	Magra Hat ..	14	12	10	13	11	9	12	10	9	12	10	9
Nadia ..	Goari ..	12	10	9	11	9	8	11	9	8	10	8	7
	Ranaghat ..	11	9	8	11	9	8	11	9	8	11	9	8
Murshidabad	Berhampore ..	13	11	9	13	11	9	12	10	9	12	10	9
	Kandi ..	14	12	10	14	12	10	13	11	9	14	12	10
	Jangipur ..	14	12	10	13	11	9	11	9	8	12	10	9
Jessore ..	Jessore ..	11	9	8	12	10	9	12	10	9	12	10	9
	Bangaon ..	13	11	9	13	11	9	12	10	9	13	11	9
Khulna ..	Khulna ..	13	11	9	13	11	9	12	10	9	12	10	9
	Bagerhat ..	11	9	8	12	10	9	11	9	8	11	9	8
Rajshahi ..	Rampur Boalia	13	11	9	12	10	9	12	10	9	13	11	9
	Natore ..	13	11	9	13	11	9	11	9	8	12	10	9
Dinajpur ..	Railbazar Hat..	14	12	10	14	12	10	12	10	9	12	10	9
Jalpaiguri ..	Jalpaiguri ..	12	10	9	12	10	9	10	8	7	9	8	6
Rangpur ..	Rangpur ..	12	10	9	12	10	9	12	10	9	11	9	8
	Nilphamari ..	12	10	9	11	9	8	11	9	8	10	8	7
Bogra ..	Bogra ..	13	11	9	13	11	9	12	10	9	11	9	8
Pabna ..	Pabna ..	12	10	9	12	10	9	11	9	8	11	9	8
	Sirajganj ..	13	11	9	13	11	9	12	10	9	11	9	8
Malda ..	Malda ..	15	13	11	14	12	10	12	10	9	13	11	9
	Balia Nawabganj	16	13	11	14	12	10	12	10	9	14	12	10
Darjeeling ..	Darjeeling ..	10	8	7	10	8	7	10	8	7	9	8	6
	Siliguri ..	12	10	9	12	10	9	10	8	7	10	8	7
Dacca ..	Dacca ..	13	11	9	12	10	9	12	10	9	12	10	9
	Mirkadim ..	13	11	9	12	10	9	12	10	9	12	10	9
Mymensingh	Nasirabad ..	12	10	9	12	10	9	11	9	8	10	8	7
	Netrakona ..	12	10	9	14	12	10	12	10	9	10	8	7
Faridpur ..	Faridpur ..	11	9	8	11	9	8	11	9	8	11	9	8
	Rajbari ..	11	9	8	12	10	9	11	9	8	11	9	8
Bakarganj ..	Barisal ..	12	10	9	12	10	9	11	9	8	10	8	7
	Pirojpur ..	12	10	9	12	10	9	10	8	7	10	8	7
Tippera ..	Comilla ..	12	10	9	11	9	8	12	10	9	11	9	8
	Chandpur ..	13	11	9	12	10	9	11	9	8	12	10	9
Noakhali ..	Kalitara Hât ..	12	10	9	11	9	8	10	8	7	10	8	7
	Feni Hat ..	12	10	9	11	9	8	11	9	8	11	9	8
Chittagong ..	Chittagong ..	13	11	9	12	10	9	11	9	8	12	10	9
	Cox's Bazar ..	12	10	9	11	9	8	10	8	7	10	8	7
Chittagong Hill Tracts.	Rangamati ..	14	12	10	12	10	9	12	10	9	13	11	9

Excise.

NOTIFICATIONS.

Minister-in-charge: The Hon'ble Sir Bijoy Prasad Singh Roy, Kt.

Noakhali. — No. 892Ex.—21st December 1934.—In exercise of the power conferred by section 3 of the Opium Act, 1878 (I of 1878), the Government of Bengal (Ministry of Excise) are pleased to empower the Sub-Deputy Magistrate at Sandwip and the munsif of Hatiya who exercise the powers of a Magistrate of the second class to try cases under the said Act.

Midnapore - 24-Parganas - Dacca - Mymensingh - Bakarganj - Chittagong.—No. 896Ex. —21st December 1934.—In exercise of the power conferred by section 12 of the Opium Act, 1878 (I of 1878), the Government of Bengal (Ministry of Excise) are pleased to authorize the Additional Collector of each of the districts of Midnapore, the 24-Parganas, Dacca, Mymensingh, Bakarganj and Chittagong, ex-officio, to exercise, concurrently with the Collector of the district, the powers of the Collector under the said section.

Midnapore - 24-Parganas - Dacca - Mymensingh - Bakarganj - Chittagong.—No. 898Ex. —21st December 1934.—In exercise of the power conferred by section 19 of the Opium Act, 1878 (I of 1878), the Government of Bengal (Ministry of Excise) are pleased to authorize the Additional Collector of each of the districts of Midnapore, the 24-Parganas, Dacca, Mymensingh, Bakarganj and Chittagong, ex-officio, to issue his warrant for the arrest of any person whom he has reason to believe to have committed an offence relating to opium, or for the search, whether by day or night, of any building or vessel or place in which he has reason to believe that opium liable to confiscation is kept or concealed.

Dacca - Mymensingh - Bakarganj - Chittagong - 24-Parganas. — No. 900Ex. — 21st December 1934.—In exercise of the power conferred by clause (*4*) of rule 2 of the rules framed under sections 5 and 13 of the Opium Act, 1878 (I of 1878), and published under notification No. 562S.R., dated the 2nd March 1918, at pages 382-395, Part I of the *Calcutta Gazette* of the 6th idem, as subsequently amended, the Government of Bengal (Ministry of Excise) are pleased to empower the Additional Collector of each of the district of Dacca, Mymensingh, Bakarganj, Chittagong and the 24-Parganas, ex-officio, to perform all the functions of a Collector under the said rules.

Midnapore - 24-Parganas - Dacca - Mymensingh-Bakarganj-Chittagong.—No. 902Ex.— 21st December 1934.—In exercise of the power conferred by sub-section (*2*) of section 34 of the Dangerous Drugs Act, 1930 (II of 1930), the Governor in Council is pleased to authorise the additional Collector of each of the districts of Midnapore, the 24-Parganas, Dacca, Mymensingh, Bakarganj and Chittagong to exercise, concurrently with the Collector of the district, the powers described in the said sub-section.

Midnapore - Howrah - 24-Parganas - Khulna-Bakarganj - Chittagong - Noakhali.—No. 904-Ex.—21st December 1934.—In exercise of the powers conferred by section 30 of the Indian Salt Act, 1882 (XII of 1882), the Governor in Council is pleased to invest the officers specified in the first column of the following table with the powers respectively mentioned opposite to them in the second column in respect of the areas mentioned in the third column of the said table:—

Designation of the officers.	Powers vested.	Areas in which the powers vested are to be exercised.
Addl. Collr., Midnapore Do., 24-Parganas. Do., Bakarganj. Do., Chittagong.	The powers of an Assistant Commissioner under Act XII of 1882 and all the powers conferred by the said Act on salt revenue officers.	In their respective districts.
Collector, Midnapore .. Do., Howrah. Do., 24-Parganas. Do., Khulna. Do., Bakarganj. Do., Chittagong. Do., Noakhali.	The powers conferred by section 15 of the Act on salt revenue officers.	Ditto.
Officers of the Bengal Excise and Salt Department of and above the rank of Sub-Inspector employed in the districts of Midnapore, Howrah, the 24-Parganas, Khulna, Bakarganj, Chittagong and Noakhali.	Ditto ..	In their respective jurisdiction.

Murshidabad.—No. 26Ex. — 12th January 1935.—Maulvi Muhammad Abedali, Inspector of Excise and Salt in charge, Murshidabad, was on leave on average pay for four days, with effect from 2nd January 1935, under rule 81(*b*)(*ii*) of the Fundamental Rules.

O. M. MARTIN,

Secy. to the Govt. of Bengal.

BOARD OF REVENUE, BENGAL.

NOTIFICATIONS.

Bogra.—No. 103C.P.—4th January 1935.—In exercise of the powers conferred by clause (*2*) of section 8 of the Bengal Land Revenue (Assistant Collectors) Regulation, 1821 (IV of 1821); the Board of Revenue authorises Babu Profulla Chandra Moulik, Settlement Kanungo, who has been placed on duty in connection with the maintenance, for the purposes of section 158A of the Bengal Tenancy Act, 1885, of the record-of-rights of the estate of Babu Paramananda Sen and others in the district of Bogra, to exercise and perform within the local limits of the said estate any of the powers and duties vested in the Collectors of Land Revenue under any enactment in force therein for the purpose of the said work of maintenance of the record-of-rights.

No. 561W.—15th January 1935.—The following rules are published for general information:—

Rules framed by the Board of Revenue under section 28 of the Murshidabad Estate Administration Act, XXIII of 1933.

Security of officers. [*Section 28 (2) (a).*]

1. The officers employed in the estate shall give security for the due and faithful performance of their duties in cash, Government securities or post office savings bank deposits for the amounts mentioned against each, named below, and shall execute agreements to that effect—

Manager—Rs. 10,000.

Assistant Manager—Rs. 2,500.

Sub-Manager—Rs. 1,000.

Treasurer, Tahsildars and Cashier—10 per cent. in excess of the maximum amount of collection or cash likely to be in their hands at one time.

2. The following officers shall execute agreements for the amount specified below against each name for the faithful performance of their duties, but no cash security need be given:—

Seristadar—Rs. 500.

Accountant—Rs. 500.

Head Jamanavis—Rs. 250.

Assistant Accountant—Rs. 250.

Peshkar—Rs. 250.

Record-keeper—Rs. 250.

Provided that

(*i*) if the Manager be a Government Officer of an All-India or a Provincial Service or a retired Government Officer of an All-India or a Provincial Service such security and agreement may be dispensed with, and

(*ii*) if any of the other officers named above be a Government Officer of gazetted rank or a retired Government Officer entitled to a pension of at least Rs. 100 a month, such security and agreement may be dispensed with. [Approved by Government unofficially on 1st December 1933. *Vide* Wards file No. 847/1933.]

CHAPTER I.

Procedure to be followed by the Manager in the discharge of his functions, accounts to be kept by him, and audit of accounts. [*Sub-clause 28 (2) (b).*]

Rule 1. The Manager may, subject to the previous approval of the Board of Revenue, delegate the power with which he is vested by law or by rules to any of the subordinates in respect of particular cases or classes of cases.

Rule 2. The Manager shall keep the Registers which have been or may in future be prescribed for a Manager of an estate under the Court of Wards and shall follow the rules for the submission of Returns, Reports, Budget estimates and scheme of management in the forms prescribed for such Managers, but shall submit them direct to the Board of Revenue.

Rule 3. All officers employed in the estate shall be subject to the Government Servants' Conduct Rules.

Rule 4. All permanent appointments carrying a salary of Rs. 100 a month or below and all temporary appointments shall be made by the Manager. All other appointments except that of the Manager, which is made by the Government under section 3 of the Act, shall be made by the Board of Revenue.

Rule 5. The Board of Revenue shall fix the number of officers to be employed in the estate and their salaries and shall make rules governing their leave allowances and travelling allowances.

Rule 6. The Civil Suit Rules contained in Chapter II of the Bengal Practice and Procedure Manual, 1918, shall apply as far as may be to all cases that may be instituted by or against the Manager in respect of the properties of the estate.*

[Approved in Government order No. 2130L.R., dated the 21st February 1934.]

Rule 7. The accounts of the estate shall be audited annually by the Examiner of Local Accounts, Bengal, for which the same fees shall be realised as is realised in the case of a Court of Wards Estate.

[Approved in Government order No. 1216T.R., dated the 22nd September 1934.]

CHAPTER II.

Powers of the Manager to make or sanction settlements and the terms, conditions and limitations under which leases may be granted [*Section 28 (2) (c) and (i).*]

Rule 1. All settlements require the sanction of the Government under the provisions of the Murshidabad Act, 1891 (XV of 1891), as

*Chapter III of the Legal Remembrancer's Manual, 1930.

amended by Act XXV of 1923, but the Manager is empowered to make the following kinds of settlements in anticipation of the sanction of the Government, namely:—

(*i*) *raiyati* settlements of land with actual cultivators of the soil, with or without payment of *lalkar* (*i.e.*, *salami*), provided that the area is not in excess of 100 bighas and the *salami does* not exceed Rs. 1,000;

(*ii*) settlements of *Sairat* mehals, such as *hats*, *bazars*, *ferries*, fisheries, forest produce, etc., for a term not exceeding five years and without payment of a premium, provided that the rent in any particular case does not exceed Rs. 500 a year;

(*iii*) settlements of houses and rooms or flats in houses, without premium, for a period not exceeding ten years, provided that the rent in any particular case does not exceed Rs. 400 a month.

The Manager shall submit a statement of all settlements made by him during the previous year under this rule, on or before the 1st day of June in every year, to the Board of Revenue, who will forward it to the Government for orders.

All other settlements shall require the previous sanction of the Government obtained through the Board of Revenue.

CHAPTER III.

Notices under the Act and the manner of publication thereof.

[*Section 28 (2) (d).*]

Rule 1. The notice required to be published under section 8 of the Act shall be published—

(*a*) in the *Calcutta Gazette*,

(*b*) in three issues of one English and one vernacular newspaper published in Calcutta,

(*c*) in two issues of a newspaper published in the Murshidabad district,

(*d*) by posting such notice on the notice boards in the offices of the Collector and the Judge of Murshidabad and the Sub-divisional Officer and the munsif of Lalbhag, and

(*e*) by beat of drum in Murshidabad city.

The notice shall be in the form given below:—

Notice under section 8 of the Murshidabad Estate Administration Act, 1933 (XXIII of 1933).

Whereas under the provisions of the Murshidabad Act, 1891 (XV of 1891), the Secretary of State for India in Council has assumed charge of the property and political pension of the Nawab Bahadur of Murshidabad.

Notice is hereby given under section 8 of the Murshidabad Estate Administration Act, 1933 (XXIII of 1933), that all persons having any claim against the said Nawab Bahadur of Murshidabad or his estate are hereby required to submit the same in writing to the Manager of the Murshidabad Estate at his office in No. 17, Lord Sinha Road, Calcutta, within six months from the date of this notice.

Claimants are also hereby warned that claims not submitted as required by this notice shall be liable to be barred in accordance with the provisions of section 10 of the Murshidabad Estate Administration Act, 1933 (XXIII of 1933).

17, Lord Sinha Road,
Calcutta,

Dated the.....1933.

Manager,
Murshidabad Estate.

N. B.—A sample copy of the form in which the claim shall be submitted is available at the office of the Manager for one anna.

[Approved in Government order No. 11916L.R., dated the 30th October 1934.]

CHAPTER IV.

Procedure for presenting and investigating claim.

(Rule 1 having been incorporated as Rule 4 in Chapter IV has been omitted from here.)

CHAPTER IV.

Procedure for presenting and investigating claims.

[*Section 28 (2) (e), (f) and (g).*]

Rule 1. In all proceedings under sections 11 and 12 of the Act, the Manager shall follow the practice and procedure laid down in the Bengal Practice and Procedure Manual, 1918, unless directed otherwise by the Act or these rules.

Rule 2. No Court-fee shall be payable in any proceedings before the Manager, but every Vokalatnama shall be stamped with a Court-fee stamp of Re. 1.

Rule 3. The deposition of witnesses examined before the Manager may be taken down in shorthand by an officer of the estate, and the transcript prepared by him as corrected and attested by the Manager, shall be the record of the evidence.

Rule 4. The statement of claim shall be in the following form and shall be presented by the claimant in person, or by a pleader within the meaning of clause (*15*) of section 2 of the Code of Civil Procedure, 1908 (Act V of 1908), or by a recognised agent within meaning of rule 2 of Order III of the First Schedule to the same Code. The Manager may accept any claim received by post if he is satisfied that it complies with the provisions of the Act and these rules:—

Statement of claim against the Nawab Bahadur of Murshidabad or his estate made by.....

.....

son of.....

residing at.....

1. Date of origin of claim.

2. Nature of claim with full particulars.

3. List of documents on which the claimant relies to substantiate claim and which are submitted along with this statement in compliance with the provisions of section 9 of the Murshidabad Estate Administration Act, 1933 (XXIII of 1933).

Signature of claimant.

(On the back of the form reproduce sections 8, 9, 10, 11, 13 (except paragraphs (*l*) (*d*), 14, 15, 16 and 17 of Act.)

Rule 5. (*i*) When a claimant has in accordance with the provisions of section 8 or section 15 of the Murshidabad Estate Administration Act (XXIII of 1933) produced documents on which he relies to prove his claim, the Manager may require him to supply a true copy of every entry in a book of account relating to the transaction.

(*ii*) The Manager may, after marking for the purpose of identification every original entry in a book of account so produced and verifying the correctness of the copy, retain the copy and return the book of account to the claimant.

(*iii*) If the document be in any language other than English, the Manager may require a true and literal translation of the document into English to be filed along with it, and may require the claimant to produce the translator for examination on oath as to the correctness of the translation.

Rule 6. Every claimant under section 11 and every person proceeded against under section 12 of the Act shall have the right to appear in person or by a recognised agent or by a pleader as defined in rule 4, Chapter IV, of these rules, and the estate of the Nawab Bahadur of Murshidabad may be represented by an officer of the estate or a pleader appointed by the Manager.

Rule 7. In determining the net amount payable to a claimant the Manager may set off any amount found to be justly due from the claimant to the Nawab Bahadur or his estate against the amount found to be justly due to the claimant on account of his claim.

Rule 8. When under section 11 of the Act the Manager reduces the rate of interest charged in a claim, he shall not reduce it to a rate lower than six percentum per annum.

Rule 9. When the Manager has determined the amount of principal justly due to a claimant and the interest in accordance with the provisions of section 11 of the Act, he may make to the claimant a proposal in writing for the reduction of the claim or the total or partial reduction of the rate of interest to be paid in future or of both, and if such proposal or any modification of it is accepted by the claimant in writing and his acceptance is finally recorded and attested by the Manager it shall be conclusively binding upon the claimant and upon the estate.

Rule 10. When the investigation and determination contemplated in sections 11 and 15 of the Act are completed the Manager shall communicate his decision in writing to the claimant.

Rule 11. Copying fees and fees for the authentication of true copies shall be levied at the same rates and copies shall be made and issued under the same rules as apply to similar cases in the office of a Collector of a district.

Rule 12. (*1*) The service of processes shall be governed, as far as may be, by the rules for the service of revenue and criminal processes in the Practice and Procedure Manual. Subject to this all processes may be served at the discretion of the Manager in any of the following three ways:—

(*i*) By the interested party himself;

(*ii*) By officers or peons of the estate;

(*iii*) Through the Collector of the district in which the person on whom the process is to be served resides.

In case of (*i*) no process fee is payable, but in cases (*ii*) and (*iii*) a process fee of Re. 1 in cash shall be paid. In case of (*ii*) this process fee of Re. 1 shall be credited to the funds of the estate and in case of (*iii*) annas 4 shall be credited to the funds of the estate and with the remainder a Court-fee stamp of 12 annas shall be purchased and affixed to the original process before it is sent to the Collector for execution.

(*2*) Diet and travelling allowances of witnesses shall be deposited before process is issued and shall be paid to the witness on appearance.

(*3*) When a commission is to be issued at the instance of any party for the examination of a witness exempted from appearance in a Civil Court the costs of commission as determined by the Manager shall be deposited by the applicant before the commission is issued.

CHAPTER V.

Procedure in appeal. [*Section 28 (2) (j).*]

Rule 1. All appeals under section 13 of the Act shall be governed by the same rules and procedure as govern appeals from Revenue Courts.

[Approved in Government order No. 2130L.R., dated the 21st February 1934.]

Noakhali.—No. 196C.P. — 5th January 1935.—In exercise of powers conferred by clause (*2*) of section 8 of the Bengal Land Revenue (Assistant Collectors) Regulation, 1821 (IV of 1821), the Board of Revenue authorises Babu Mohim Chandra Datta, Settlement Kanungo, who has been placed on duty in connection with the maintenance, for the purposes of section 158A of the Bengal Tenancy Act, 1885, of the record-of-rights of the estate of Babu Hari Prasanna Roy Choudhury and others, Zemindars in the district of Noakhali, to exercise and perform within the local limits of the said estate any of the powers and duties vested in the Collectors of Land Revenue under any enactment in force therein for the purpose of the said work of maintenance of the record-of-rights.

Faridpur.—No. 197C.P.—5th January 1935. —In exercise of powers conferred by clause (*2*) of section 8 of the Bengal Land Revenue (Assistant Collectors) Regulation, 1821 (IV of 1821), the Board of Revenue authorises Babu Anukul Chandra Das, Settlement Kanungo, who has been placed on duty in connection with the maintenance, for the purposes of section 158A of the Bengal Tenancy Act, 1885, of the record-of-rights of the estate of Muhammed Ismail Munshi and Abdul Hamid Munshi of Badekhagail, in the district of Faridpur, to exercise and perform within the local limits of the said estate any of the powers and duties vested in the Collectors of Land Revenue under any enactment in force therein for the purpose of the said work of maintenance of the record-of-rights.

No. 327Elec.—10th January 1935.—It is hereby notified that Babu Dhirendra Kanta Lahiri Choudhury and Babu Naba Kumar Singh Dudhoria, the candidates for election to the Legislative Assembly from the Bengal Landholders' constituency, filed on the 4th and 5th January 1935, respectively, their returns of election expenses and the declarations in respect thereof as required by clauses (*1*) and (*3*) of rule 19 of the Legislative Assembly Electoral Rules and Regulations, 1934. These can be inspected in the office of the Board of Revenue on payment of a fee of Re. 1 between the hours of 11 a.m. and 3 p.m. for one week from the publication of this notification in the gazette.

M. O. CARTER,
Secy. to the Board of Revenue, Bengal.

TREASURY NOTICES.

Jessore, the 2nd January 1935.

Uncovenanted Deputy Collector Babu Sukumar Chatterjee has been placed in executive charge of the Jessore Treasury with effect from the forenoon of the 2nd January 1935 and is authorised to draw bills on other treasuries.

N. K. SEN, *Collector.*

Rajshahi, the 5th January 1935.

Uncovenanted Deputy Collector Babu Subodh Chandra Basu is placed in charge of the Rajshahi Treasury with effect from the afternoon of the 5th January 1935.

He is authorised to draw bills on other treasuries.

A. S. LARKIN, *Collector.*

Orders by the Deputy Accountant-General, Bengal.

The Treasury, the 5th January 1935.

It is notified that the refund order book No. 4756 containing 50 orders "White" is in use by the Income-Tax Office, Military Circle, Meerut, with effect from the 19th December 1934.

A. R. REBELLO,
Dy. Accountant-General, Bengal.

SHERIFF'S OFFICE.

The 17th January 1935.

Notice is hereby given that the First Criminal Sessions of the year 1935 of the High Court of Judicature at Fort William in Bengal for the town of Calcutta and factory of Fort William and the places subordinate thereto, will be held at the Court House, in the town of Calcutta, on Monday, the 18th day of February next, at 11 o'clock in the forenoon, and thenceforward from day to day until the said sessions be over. And it is hereby proclaimed that all persons who are to prosecute any of the prisoners to be brought up for trial at the said sessions be present then and there to prosecute.

A. H. GHUZNAVI, *Sheriff.*

শরিফ আফিস, সন ১৯৩৫ সালের ১৭ই জানুয়ারী।

সকলকে সমাচার দেওয়া যাইতেছে যে, সুবে বাঙ্গালার ফোর্ট উইলিয়ম দুর্গের অধীনে সহর কলিকাতার ও অন্যান্য স্থানের ফৌজদারী বিচার নিষ্পত্তি জন্য আগামী সন ১৯৩৫ সালের ১৮ই ফেব্রুয়ারী সোমবার বেলা ১১ ঘটিকার সময় এবং যে পর্য্যন্ত সেসিয়নের কার্য্য সমাধা না হয়, প্রতিদিন উক্ত সময়ে কলিকাতার হাইকোর্টের আপন আদালত ঘরে সন ১৯৩৫ সালের প্রথম ক্রিমিন্যাল সেসিয়ন বসিবেক, এবং এতদ্বারা প্রচার করা যাইতেছে যে, যে সকল ব্যক্তি কোন কয়েদীর বিরুদ্ধে কোন ফৌজদারী মিছিল করিবেক, তাহারা উক্ত স্থানে উক্ত সময়ে হাজির থাকিয়া মোকদ্দমা করে। ইতি।

এ, এইচ, গজনাভি,
শরিফ।

HIGH COURT NOTICES.

Civil.

The 3rd January 1935.

No. 94A.—The officers named in the following schedule are vested with the powers of a Judge of a Court of Small Causes for the trial of suits cognizable by such a Court up to the value of Rs. 100 within the local limits mentioned against each:—

Schedule.

1. Babu Pushpita Ranjan Mukharji, munsif of Cox's Bazar, Chittagong.
2. Maulvi Mahtabuddin Ahmed, munsif, Patiya, Chittagong.

The 10th January 1935.

No. 436A.—Babu Binod Chandra Sen, Deputy Magistrate and Deputy Collector, Darjeeling, exercising the powers of a Subordinate Judge in that district and those of a munsif within the Sadar subdivision of that district, is vested with the powers of a Judge of a Court of Small Causes for the trial of suits cognizable by such a Court up to the value of Rs. 500 within the local limits of the Sadar munsifi of Darjeeling.

The 11th January 1935.

No. 577A.—Mr. W. J. Palmer, I.C.S., Joint Magistrate, Kurseong, in the district of Darjeeling, exercising the powers of a munsif, is vested with the powers of a Judge of a Court of Small Causes for the trial of suits cognizable by such a Court up to the value of Rs. 50 within the local limits of the Kurseong subdivision.

The 12th January 1935.

No. 688A.—Babu Jyoti Prasad Banarji, munsif of Kushtia, in the district of Nadia, is vested under section 19, sub-section (2) of the Bengal, Agra and Assam Civil Courts Act, 1887 (XII of 1887), as amended by the Decentralization Act, 1914 (IV of 1914), with powers to try, under the ordinary procedure, original suits up to the value of Rs. 2,000 arising within the local limits of Kushtia munsifi.

No. 691A.—Babu Jitendra Prasad Sen, munsif of Naogaon in the district of Rajshahi and Malda, is vested under section 19, sub-section (2) of the Bengal, Agra and Assam Civil Courts Act, 1887 (XII of 1887), as amended by the Decentralization Act, 1914 (IV of 1914), with powers to try, under the ordinary procedure, original suits up to the value of Rs. 2,000 arising within the local limits of Naogaon munsifi.

English Department.

The 12th January 1935.

No. 683G.—The Hon'ble the Chief Justice has been pleased to confirm with effect from the 9th January 1935—

(1) Mr. J. J. Young as Assistant Registrar, English Office, High Court, Appellate Side, *vice* Khan Bahadur Badr-ud-din Ahmad, promoted, and

(2) Mr. Anukul Chandra Basu, as Assistant Registrar, Paper Book Department, *vice* Mr. J. J. Young, promoted.

By order of the High Court,

N. L. HINDLEY, *Registrar.*

ORDERS BY COMMISSIONERS OF DIVISIONS.

Burdwan Division—Chinsura.

No. 51L. S.-G.—12th January 1935.—It is hereby notified for general information that, in exercise of the powers conferred by rule 19 of the Election Rules under the Local Self-Government Act, the undersigned determines that the number of members to be elected from the Special Constituency, and each existing thana of the General Constituency, of the Arambagh local board in the district of Hooghly will be as shown below against each:—

I.—Special Constituency.

Name of local board.	Thana.	Grouping of unions where necessary	Number of seats reserved for the minority community.
Arambagh local board, Hooghly	Arambagh ..	All the unions	1
	Goghat ..	All the unions	
	Khanakul ..	All the unions	1
	Pursurah ..	All the unions	

II—General Constituency.

Arambagh ..	Tirole Batanal Moloypur	1
Arambagh ..	Horinkhola Mayapur Arandi	1
Arambagh ..	Madhabpur Shalepur Gourhati	1
Goghat ..	Bengai Kumorgunj Raghubati Bhadur	1

Name of local board.	Thana.	Grouping of unions where necessary.	Number of seats reserved for the minority community.
	Goghat ..	Goghat Kamarpukur Mandaran Hazipur	1
	Goghat ..	Kumursha Bali Saora Nakunda	1
	Goghat ..	Badangunjo Fului Shambazar Paschimpara	1
	Khanakul ..	Kishorepur Ghoshpore Pole	1
	Khanakul ..	Atghora Balipur Chinghra	1
	Khanakul ..	Khanakul Rajhati	1
	Khanakul ..	Thakuranichak. Jogatpur	1
	Khanakul ..	Sabalsingpur Natibpur	1
	Pursurah ..	Bhangamora Dihibatpur	1
	Pursurah ..	Pursura Shampore	1

No. 52L. S.-G.—12th January 1935.—It is hereby notified for general information that, in exercise of the powers conferred by rule 19 of the Election Rules under the Local Self-Government Act, the undersigned determines that the number of members to be elected from the Special Constituency, and each existing thana of the General Constituency, of the Serampore local board in the district of Hooghly will be as shown below against each :—

I.—Special Constituency.

Name of local board.	Thana.	Grouping of unions where necessary.	Number of seats reserved for the minority community.
Serampore local board, Hooghly.	Tarakeswar ..	All the unions	1
	Jangipara ..	All the unions	
	Haripal ..	Dwarhatta Gopinathpur	
	Chanditola ..	Akuni Echapashar	
	Chanditola ..	All the unions except Akuni and Echapashar	1
	Uttarpara ..	Makla Nawapara	
	Serampore ..	Rajyadharpur Pearapur	
	Bhadreswar ..	Bighati Khalsini	
	Singur ..	All the unions.	1
	Haripal ..	All the unions except Dwarhatta and Gopinathpur	

II.—General Constituency.

Name of local board.	Thana.	Grouping of uniods where necessary.	Number of seats reserved for the minority community.
	Tarakeswar ..	Tarakeswar Talpur	1
	Tarakeswar ..	Baligari Ramnagar Champadanga	1
	Jangipara ..	Rajbalhat Rashidpur Dilakash	1
	Haripal ..	Dwarhatta-Gopinathpur	1
	Jangipara ..	Autpur-Jangipara Radhanagar	
	Jangipara ..	Mandalika Kotalpur	1
	Chanditola ..	Phurfura Akuni Echapashar	
	Chanditola ..	Sheakhala Nababpur-Kumirmora.	1
	Chanditola ..	Janai Chanditola	1
	Chanditola ..	Begampur Monoharpur	1
	Uttarpara ..	Makla Nawpara	1
	Serampore ..	Rajyadharpur Pearapur.	
	Bhadreswar	Bighati Khalsini	
	Singur ..	Bara .. Nashibpur .. Anandanagar	1
	Singur ..	Singur Balarambati Gopalnagar	1
	Haripal ..	Faridpur Bandipur Jejur Kaikala	1
	Haripal ..	Nalikul Ellipur Haripal	1

No. 53L. S.-G.—12th January 1935.—It is hereby notified for general information that, in exercise of the powers conferred by rule 19 of the Election Rules under the Local Self-Government Act, the undersigned determines that the number of members to be elected from the Special Constituency, and each existing thana of the General Constituency, of the

Sadar local board in the district of Hooghly will be as shown below against each:—

I—Special Constituency.

Name of local board.	Thana.	Grouping of unions where necessary.	Number of seats reserved for minority community.
Sadar local board, Hooghly.	Balagarh ..	All the unions	1
	Pandua ..	All the unions except Itachona-Khanyan.	
	Magra ..	All the unions	1
	Pandua ..	Itachona-Khanyan	
	Chinsura ..	Kodalia-Debanandapore	
	Polba ..	All the unions except Babnan and Makhalpore	
	Polba ..	Babnan. Makhalpore	1
	Dhaniakhali	All the unions	

II.—General Constituency.

	Balagarh ..	Guptipara Bankulia Dhobapara Ektarpore Mohipalpore	1
	Balagarh ..	Somra Sripur-Balagarh Sija-Kamalpore Dumurdah-Nityanandapore.	1
	Pandua ..	Jamna Batke-Boinchee Berela-Coachmali Haral-Daspore Simlagarh-Vitashin	1
	Pandua ..	Pandua Belun-Dhamashin Rameswarpur-Gopalnagore Jair-Dwarbasini	1
	Pandua ..	Toregram-Panchgora Jamgram-Mondlai Ilsoba-Daspore Sikra-Champta	1
	Mogra ..	Hoora-Dighsui Mogra	1
	Pandua ..	Itachona-Khanyan	
	Chinsura ..	Kodalia-Debanandapore	1
	Polba ..	Rajhat Sugandhya Akna	
	Polba ..	Polba Mahanad Amnan Harit	1
	Polba ..	Gossain-Malipara Satithan Dadpore	1
	Polba ..	Babnan Makhalpore	1
	Dhaniakhali	Belmuri Mandra	
	Dhaniakhali	Gopinathpore Parambua-Sahabazar Dasghara Bhanderhati	1
	Dhaniakhali	Samaspore Dhaniakhali Gurbari	1
	Dhaniakhali	Bhastara Khejurdaha-Melki Gurup	1

No. 150J.G.—12th January 1935.—Babu Bijoy Kumar Datta Gupta, Sub-Deputy Collector, Howrah, is transferred to the headquarters station of the Bankura district for employment on general duty. The transfer is made in the public interest.

L. B. BURROWS, *Commissioner.*

Chinsura, the 4th January 1935.

It is hereby notified for general information under rule 3 of the rules for the managing committee of Government High Schools at page 199 of the Bengal Education Code, 1931, that the following gentlemen have been appointed as members of the managing committee of the Government High School at Uttarpara with effect from 1st January 1935:—

The Subdivisional Officer of Serampore—President (*ex-officio*).

The Headmaster, Uttarpara Government High School—Vice-President and Secretary (*ex-officio*).

Babu Kshitish Chandra Pain, B.A., B.T., Assistant Headmaster—Representative of teachers.

Sir Satyacharan Mukherjee, M.A., B.L., C.B.E., M.L.A., Zamindar—Representative of parents and guardians.

Babu Nirode Baran Mukherjee, B.A., Zamindar—Representative of parents and guardians.

The medical officer in charge of the Uttarpara Government Hospital (*ex-officio*).

An official other than an Inspecting Officer of the Education Department.

D. MACPHERSON, *District Magistrate.*

Birbhum, the 10th January 1935.

No. 11L.S.-G.—It is hereby notified for general information that, under section 13 of the Bengal Village Self-Government Act, 1919 (Bengal Act V of 1919), read with rule 35 of the rules for the election and appointment of members of union boards, etc., Babu Judhisthir Mandal has been duly elected to be a member for Ward No. I of the Sultanpur union board in Suri police-station in the Sadar subdivision of the district of Birbhum, *vice* Munshi Shaikh Kasem Ali, deceased.

K. L. MOOKERJI, *District Magistrate.*

Orders by the Deputy Inspector-General of Police, Burdwan Range.

Chinsura.—No. 285.—11th January 1935.—Babu Nritya Gopal Mukharji, Inspector, Hooghly, was granted 3 days' leave on average pay, under rule 81(*b*)(*ii*) of the Fundamental Rules, in extension of the leave granted to him under notification No. 6988, dated the 30th November 1934, published in the *Calcutta Gazette*, dated the 13th December 1934. He was permitted to affix to his leave Sunday, the 23rd December 1934, and the gazetted holidays from the 24th December 1934 to the 1st January 1935.

Sub-Inspector Phanindra Mohan Das Gupta of Howrah is appointed to act as Inspector in the East Indian Railway Police, Howrah, *vice* Rai Sahib Shyamapati Ray, Inspector, deceased.

Maulvi Jawadul Karim of the East Indian Railway Police, Howrah, who is at present acting as Inspector in the vacancy, will, on relief, revert to his substantive rank.

E. B. JONES,
Deputy Inspector-General of Police.

Chittagong Division—Chittagong.

No. 27G.—3rd January 1935.—Maulvi Salehuddin Ahmad, Sub-Deputy Collector and Circle Officer, Rauzan, in the district of Chittagong, is transferred to the Cox's Bazar subdivision of that district as Circle Officer. The transfer is made in the public interest.

No. 97G.—10th January 1935.—It is hereby notified for general information that Babu Pramada Nanda Kundu, Manager, Bhulua Wards Estate, Noakhali, is appointed to be a non-official visitor of the Noakhali Sub-Jail for a period of two years with effect from the date of this notification, in place of Babu Jogendra Lal Pakrashi, who is leaving the district on transfer.

H. GRAHAM, *Commissioner.*

Tippera, the 4th January 1935.

No. 36M.—It is hereby notified for general information that, under section 13 of the Bengal Village Self-Government Act, 1919, read with section 6 (*2*) and rule 35 of the rules for the election and appointment of members of union boards that Maulvi Abdul Hamid Miah has been elected as a member of Islamabad union board No. X of Matlab police-station in the Chandpur subdivision of the district of Tippera, *vice* Maulvi Fazarali Sircar, deceased.

A. HYE, *Addl. District Magistrate.*

Orders by the Deputy Inspector-General of Police, Bakarganj Range.

Barisal.—No. 26.—3rd January 1935.—Maulvi Abdul Hamid, officiating Inspector, Tippera, who is at present acting as Inspector, *vice* Babu Pramod Bihari Sen, Inspector, retired, will continue to act as Inspector, *vice* Rai Sahib Prabodh Chandra Mazumdar, Inspector, officiating as Deputy Superintendent.

Khan Sahib Bazlur Rahman, Inspector, River Police, Narayanganj, who has since been posted to Bakarganj, is granted 4 months' leave on average pay, under rule 81 (*b*) (*ii*) of the Fundamental Rules, with effect from the date of closing down of the River Police as a separate unit.

Maulvi Serajul Islam, officiating Inspector, Bakarganj, will continue to act as Inspector in the vacancy.

J. C. FARMER,
Deputy Inspector-General of Police.

Dacca Division—Dacca.

No. 3J.—2nd January 1935.—It is hereby notified for general information that, under rule 20 (*b*) of the manual of rules for the management of charitable hospitals and dispensaries in Bengal, published with Government notification No. 138T.Medl., dated the

7th June 1915, the following gentlemen are appointed to be members of the committee for the management of the five charitable dispensaries noted below in the district of Dacca:—

1. Mulchar Dispensary.

1 to 9. The members of the Kamarkhara Baherak union board (*ex-officio*).
10. Babu Amulya Kumar Sen.

2. Kazirpagla Dispensary.

Babu Jagadindra Narain Banerjee Choudhury.
Babu Harendra Nath Som.
Babu Apurba Kumar Hazra.
Babu Surya Kanta Bose.
Babu Ananta Kumar Saha.
Babu Monoranjan Chakravorty.
Babu Kaliprasanna Karmakar.
Munshi Md. Yakub Ali Jamadar.
Khan Sahib Sujatali Khan.

3. Kanakshar Dispensary.

Babu Sital Chandra Karmakar, B.A.
Babu Upendra Lal Chakravorty, B.A.
Babu Hem Chandra Dutta, B.A.
Babu Rama Kanta Chakravorty.
Munshi Md. Hazi Hanif Moral.
Babu Digendra Nath Nag.
Babu Kamakhya Charan Chatterjee.
Babu Sashi Bhushan Banerjee.
Munshi Panju Sikdar.

4. Hashara Dispensary.

Rai Sahib Banga Chandra Choudhury.
Babu Jogendra Chandra Banerjee, M.A.
Babu Lal Mohon Bhattacherjee.
Babu Munindra Kumar Ghose, B.L.
Babu Haripada Shome.
Babu Durga Mohan Bhowmick.
Munshi Mahiuddin Gazi.
Munshi Taizuddin Ahmed.
Maulvi Kafiluddin Chaudhury, B.L.

5. Pawaldia Dispensary.

Babu Suresh Chandra Ghose.
Babu Satyabrata Ghose.
Babu Haran Chandra Rakshit.
Babu Rebati Mohon Ghose.
Babu Pramatha Nath Chakravorty.
Rai Jogesh Chandra Ghosh Bahadur.
Munshi Aftabuddin Majhi.
Munshi Panaullah.
Maulvi A. Majid.

No. 29J. — 3rd January 1935. — Babu Sudhansu Bimal Das Gupta, Sub-Deputy Collector and Circle Officer, North Circle, Narainganj, in the district of Dacca, is transferred to the headquarters station of that district.

No. 34J.—3rd January 1935.—Maulvi Abdul Majid Chaudhuri, Sub-Deputy Collector, who has been posted to the Dacca Division in Government notification No. 15064A., dated the 24th December 1934, is appointed to be Circle Officer of North Circle, Narainganj, in the district of Dacca.

No. 39J.—3rd January 1935. —Maulvi Kabiruddin Ahmad Khan, Sub-Deputy Collector, who has been posted to the Dacca Division in Government notification No. 15056A., dated the 24th December 1934, is appointed to be Circle Officer of Gopalpur Circle in Tangail subdivision of the district of Mymensingh.

No. 44J.—3rd January 1935.—Babu Ananta Kumar Malakar, Sub-Deputy Collector and Circle Officer, Kendua Circle, in the district of Mymensingh, is appointed to be Circle Officer of Orakandi Circle in Gopalganj subdivision of the district of Faridpur.

No. 50J.—3rd January 1935.—Babu Ram Sebak Bhattacherji, Sub-Deputy Collector, who has been posted to the Dacca Division in Government notification No. 15060A., dated the 24th December 1934, is appointed to be Circle Officer of Kendua Circle in Netrakona subdivision of the district of Mymensingh.

No. 55J. — 3rd January 1935. — Babu Upendra Nath Biswas, Sub-Deputy Collector, who has been posted to the Dacca Division in Government notification No. 15084A., dated the 24th December 1934, is posted to Bakarganj for employment on khas mahal work.

No. 67J.—4th January 1935. — Babu Dhirendra Nath Khan, Sub-Deputy Collector, who has been posted to the Dacca Division in Government notification No. 15068A., dated the 24th December 1934, is posted to the headquarters station of the district of Faridpur on general duty.

No. 142J.—10th January 1935.—It is hereby notified for general information that, under rule 63(*1*) of the Bengal Jail Code, 1919, Maulvi Hashemali Khan, member of the Bengal Legislative Council, is appointed to be a non-official visitor of the Barisal District Jail in place of Babu Lalit Kumar Bal, *vide* this office notification No. 3687J., dated the 7th July 1930.

No. 145J.—10th January 1935.—It is hereby notified for general information that, under rule 63(*2*) of the Bengal Jail Code, 1919, Mrs. Dorothy Angus of the Baptist Mission, Barisal, is appointed to be a non-official visitor of the Barisal District Jail in the district of Bakarganj for a further period of two years, with effect from the 25th January 1935.

No. 165J.—10th January 1935.—Babu Purna Chandra Sen, Sub-Deputy Collector, who has temporarily been posted to the Dacca Division in Government notification No. 143-A., dated the 7th January 1935, is appointed temporarily to be Circle Officer of Sadar Circle in the district of Faridpur.

No. 169J.—10th January 1935.—Babu Parbati Charan Nandi, Sub-Deputy Collector, and Circle Officer, Faridpur, is temporarily placed on general duty in that district.

W. H. NELSON, *Commissioner.*

Barisal, the 31st December 1934.

No. 8927J.—It is hereby notified for general information that, under section 13 of the Bengal Village Self-Government Act, 1919 (Act V of 1919), Munshi Muhammad Abdul Hossain Sikdar *alias* Muhammed Wajed Ali Sikdar has been duly elected to be a member of the Darial union board within police-station Bakarganj of Sadar subdivision in the district of Bakarganj, *vice* Madhusudan Chakraborty, resigned.

Barisal, the 10th January 1935.

No. 149J.—It is hereby notified for general information that, under section 13 of the Bengal Village Self-Government Act, 1919 (Bengal Act V of 1919), read with rule 36 of the rules for the election and appointment of members of union boards, etc., Maulvi Mir Majid Ali has been appointed by the undersigned to be a member of Deuli-Shubidkhali union board in police-station Mirzaganj in Patuakhali subdivision of the district of Bakarganj, *vice* Maulvi Mir Monapali, deceased.

No. 151J.—It is hereby notified for general information that, under section 13 of the Bengal Village Self-Government Act, 1919 (Act V of 1919), Munshi Ali Hossain Sikdar has been duly elected to be a member of Gachua union board within police-station Muladi in the Sadar subdivision (North) in the district of Bakarganj, *vice* Maulvi Golam Jabbor Chaudhury, resigned.

No. 153J.—It is hereby notified for general information that, under section 13 of the Bengal Village Self-Government Act, 1919 (Act V of 1919), Munshi Jaynal Molla has been duly elected to be a member of Badarkhali union board within police-station Barguna in the Patuakhali subdivision in the district of Bakarganj, *vice* Munshi Basarat Khan, deceased.

A. J. DASH, *District Magistrate.*

Faridpur, the 2nd January 1935.

No. 1J.—It is hereby notified for general information that, under section 13 of the Bengal Village Self-Government Act (Act V of 1919), Abdul Wahed Mandal has been appointed by the District Magistrate of Faridpur to be a member of the Majchar union board in police-station Kotwali in the Sadar subdivision of the Faridpur district, *vice* Maulvi Abdul Kader Molla, deceased.

No. 2J.—It is hereby notified for general information that—

(*a*) Under sub-section (*2*) of section 6 of the Bengal Village Self-Government Act, 1919 (Bengal Act V of 1919), the following gentlemen have been duly elected to be members of the Akhaterchar union board in police-station Sadarpur of the Sadar subdivision of the Faridpur district:—

Panju Bepari.
Kazem Khan.
Naimaddi Hawladar.
Babu Mohini Mohan Rai.
Kohel Munshi.
Momarek Molla.

(*b*) Under sub-section (*3*) of section 6 of the Act, the following gentlemen have been appointed by the District Magistrate of Faridpur to be members of the said union board:—

Babu Gostha Behari Sarkar.
Babu Prahlad Chandra Biswas.
Maulvi Abdus Samad.

No. 3J.—It is hereby notified for general information that—

(*a*) Under sub-section (*2*) of section 6 of the Bengal Village Self-Government Act, 1919 (Bengal Act V of 1919), the following gentlemen have been duly elected to be members of the Bhasanchar union board in police-station Sadarpur of the Sadar subdivision of the Faridpur district:—

Babu Indra Mohan Bairagi.
Babu Durga Charan Mondal.
Babu Kasiswar Mondal.
Babu Kedar Nath Mandal.
Babu Manik Sarkar.
Munshi Bahauddin.

(*b*) Under sub-section (*3*) of section 6 of the Act, the following gentlemen have been appointed by the District Magistrate of Faridpur to be members of the said union board:—

Hatem Mia.
Dr. Hochenaddin Khan.
Maulvi Samsuddin Ahammad.

No. 4J.—It is hereby notified for general information that—

(*a*) Under sub-section (*2*) of section 6 of the Bengal Village Self-Government Act, 1919 (Bengal Act V of 1919), the following gentlemen have been duly elected to be members of the Ballavdi union board in police-station Nagarkanda of the Sadar subdivision of the Faridpur district:—

Babu Mahendra Nath Hore.
Babu Mahadeb Bhattacharjee.
Abdul Gani Sarif.
Kazi Anawaruddin.
Babu Suresh Chandra Biswas.
Arju Khan.

(*b*) Under sub-section (*3*) of section 6 of the Act, the following gentlemen have been appointed by the District Magistrate of Faridpur to be members of the said union board:—

Derajaddin Munshi.
Babu Aswini Kumar Rajak.
Munshi Abdul Wahed Mia.

Faridpur, the 8th January 1935.

No. 166J.—It is hereby notified for general information that, under section 13 of the Bengal Village Self-Government Act (Act V of 1919), Maulvi Khandakar Azizal Bari has been duly elected to be a member of the Padamdi union board in police-station Baliakandi in the Goalundo subdivision of the Faridpur district, *vice* Munshi Keyamuddin Mondal, deceased.

A. E. PORTER, *District Magistrate.*

Dacca, the 3rd January 1935.

It is hereby notified for general information that Babu Suryya Kumar Som, who has been declared as a duly elected candidate of the Legislative Assembly from the Dacca Division (Non-Muhammadan) Constituency, under rule 14 (*9*) of the Bengal Legislative Assembly Electoral Rules, has lodged with me on 2nd January 1935 the return of his election expenses, under rule 19 (*1*) of the said rules.

The return may be inspected in my office on payment of the prescribed fee of rupee one only on all working days during office hours 11 a.m. to 5 p.m., but on Saturdays 11 a.m. to 2 p.m.

It is hereby notified for general information that Babu Kumar Sankar Ray Chaudhury, a duly nominated candidate of the Legislative Assembly from the Dacca Division (Non-Muhammadan) Constituency, has lodged with me on 24th December 1934 the return of his election expenses, under rule 19 (*1*) of the Bengal Legislative Assembly Electoral Rules.

The return may be inspected in my office on payment of the prescribed fee of rupee one only on all working days during office hours 11 a.m. to 5 p.m., but on Saturdays 11 a.m. to 2 p.m.

W. H. NELSON, *Returning Officer.*

Orders by the Deputy Inspector-General of Police, Dacca Range.

Dacca.—No. 133.—10th January 1935.—Babu Shasadhar Biswas, Inspector, Mymensingh, is granted 4 months' privilege leave with effect from the date he is relieved.

Sub-Inspector Abdul Marfat Khan of Mymensingh is appointed to act as Inspector in the vacancy.

Maulvi Muhammad Sultan, Inspector, River Police, who has since been posted to Faridpur, is granted 4 months' leave on average pay with effect from the date on which the River Police is abolished.

Babu Surendra Mohan Sarkar, officiating Inspector, Faridpur, will continue to act as Inspector in the vacancy.

R. M. WRIGHT,

Deputy Inspector-General of Police.

Presidency Division—Calcutta.

No. 18M.—3rd January 1935.—In exercise of the powers conferred by section 50 of the Bengal Municipal Act, 1932 (Bengal Act XV of 1932), it is hereby notified for general information that Babu Anukul Chandra Banerji and Babu Hira Lal Das have been duly elected Chairman and Vice-Chairman respectively of the Baranagar Municipality in the district of the 24-Parganas.

No. 22M.—3rd January 1935.—In exercise of the powers conferred by section 50 of the Bengal Municipal Act, 1932 (Bengal Act XV of 1932), it is hereby notified for general information that Mr. G. M. Garric and Babu Kshetra Pal Ghatak have been duly elected Chairman and Vice-Chairman respectively of the Garulia Municipality in the district of the 24-Parganas.

No. 28M.—3rd January 1935.—In exercise of the powers conferred by section 50 of the Bengal Municipal Act, 1932 (Bengal Act XV of 1932), it is hereby notified for general information that Babu Satkori Mitra and Babu Jatindra Nath Chatterji have been duly elected Chairman and Vice-Chairman respectively of the Panihati Municipality in the district of the 24-Parganas.

No. 9J.G.—9th January 1935.—In exercise of the powers conferred on me by rule 63 (*2*) of the Bengal Jail Code, Volume I, as revised, I appoint the following gentlemen to be non-official visitors of the Jangipur Sub-Jail in the district of Murshidabad for a period of two years with effect from the date of this notification:—

Maulvi Syed Abul Fazle.
Babu Kirit Bhusan Das.

No. 14J.G.—10th January 1935.—In exercise of the powers conferred on me by rule 63 (*2*) of the Bengal Jail Code, 1919, Volume I, as revised, I appoint the following gentlemen as non-official visitors of the Berhampore District Jail in the district of Murshidabad for a period of two years with effect from the 16th January 1935:—

Maulvi Kazi Ali Muhammad.
Babu Bisweswar Ray.
Rai Sahib Tarak Nath Bhattacherjee.

No. 80L.S.-G.—10th January 1935.—It is hereby notified for general information that, under rule 23 of the dispensary manual, Babu Anandalal Mukherjee has been appointed to be a member of the managing committee of the Berhampore Charitable Hospital in the district of Murshidabad, in place of Babu Sarat Chandra Bhattacharyya, deceased.

No. 69R.G.—12th January 1935.—This office notification No. 3014R.G., dated the 29th December 1934, transferring Babu Purna Chandra Sen, Sub-Deputy Collector, Khulna, to Nadia Sadar as Circle Officer, is cancelled.

No. 85R.G. — 12th January 1935.—Babu Narendra Nath Mukherjee, Sub-Deputy Collector, on leave, is posted to Sadar Nadia as Circle Officer.

This cancels this office notification No. 3008R.G., dated 29th December 1934, posting him to Khulna as Stamp Inspector.

No. 90L.S.-G.—13th January 1935. — In exercise of the power conferred by rule 19 of the election rules under the Local Self-Government Act as amended by notification No. 2898L.S.-G., dated the 5th July 1934, I hereby notify for general information that the number of members to be elected from each of the local boards in the district of Nadia is shown below against each such local board:—

Name of local board and of the thanas comprising it.	Total number of members to be elected.	Number of ordinary seats allotted.	Number of special seats allotted.
1	2	3	4
Sadar ..	*9*	*5*	*4*
Kaliganj ..	2	1	1
Nakashipara ..	2	1	1
Chapra ..	2	1	1
Krishnagar ..	2	1	1
Nadia ..	1	1	..
Ranaghat ..	*9*	*5*	*4*
Santipur ..	1	1	..
Hanskhali ..	1	1	..
Ranaghat ..	3	1	2
Chakdah ..	2	1	1
Haringhata ..	2	1	1
Chuadanga ..	*9*	*6*	*3*
Chuadanga ..	2	1	1
Alamdanga ..	2	1	1
Damurhuda ..	2	2	..
Jibannagar ..	2	1	1
Krishnagunj ..	1	1	..
Meherpur ..	*8*	*6*	*2*
Karimpur ..	2	1	1
Tehatta ..	2	2	..
Meherpur ..	2	2	..
Gangani ..	2	1	1
Kushtia ..	*10*	*8*	*2*
Daulatpur ..	2	1	1
Bheramara ..	1	1	..
Mirpur ..	2	1	1
Kushtia ..	2	2	..
Kumarkhali ..	2	2	..
Khoksha ..	1	1	..

H. J. TWYNAM, *Commissioner.*

Notice under rule 19 (5) of the Legislative Assembly Electoral Rules.

Calcutta, the 5th January 1935.

The undermentioned candidates for election to the Legislative Assembly from the Burdwan and Presidency Divisions (Muhammadan) Constituency have lodged returns of election expenses on the dates mentioned against their names. The returns and the declarations may be inspected in the office of the Commissioner, Presidency Division, at 3, Charnock Place, Calcutta, during office hours on payment of a fee of rupee one only:—

Name of candidate.	Date on which return was lodged with the Returning Officer.
Maulvi Shamsuddin Ahmed ..	3rd January 1935.
Khan Bahadur Maulvi Ekramul Huq ..	4th January 1935.

H. J. TWYNAM, *Commissioner,*

Presidency Division (Returning Officer).

Notice under rule 19 (5) of the Legislative Assembly Electoral Rules.

Calcutta, the 5th January 1935.

The undermentioned candidates for election to the Legislative Assembly from the Presidency Division (Non-Muhammadan) Constituency have lodged returns of election expenses on the dates mentioned against their names. The returns and the declarations may be inspected in the office of the Commissioner, Presidency Division, at 3, Charnock Place, Calcutta, during office hours on payment of a fee of rupee one only:—

Name of candidate.	Date on which return was lodged with the Returning Officer.
Babu Ban Bihari Sarkar ..	4th January 1935.
Babu Satyendra Nath Sen ..	4th January 1935.

H. J. TWYNAM, *Commissioner,*

Presidency Division (Returning Officer).

Notice under rule 19 (5) of the Legislative Assembly Electoral Rules.

Calcutta, the 6th January 1935.

The undermentioned candidate for election to the Legislative Assembly from the Presidency Division (Non-Muhammadan) Constituency has lodged a return of election expenses on the date mentioned against his name. The return and the declaration may be inspected in the office of the Commissioner, Presidency Division, at 3, Charnock Place, Calcutta, during office hours on payment of a fee of rupee one only:—

Name of candidate.	Date on which return was lodged with the Returning Officer.
Babu Jay Kumar Sing Dudhoria ..	5th January 1935

H. J. TWYNAM, *Commissioner,*

Presidency Division (Returning Officer).

Orders by the Deputy Inspector-General of Police, Presidency Range.

Calcutta.—No. 104-05.—5th January 1935.—Babu Narendra Nath Ghosh, Inspector, Khulna, is granted 4 months' leave on average pay on medical certificate, under rule 81 (*b*) (*ii*) of the Fundamental Rules, with effect from the date on which he is relieved.

Sub-Inspector Salamatullah of the 24-Parganas is appointed to act as Inspector in the vacancy.

The transfer is effected in the interests of public service.

L. H. BURTON,

Deputy Inspector-General of Police.

Orders by the Deputy Inspector-General of Police, Intelligence Branch.

Calcutta.—No. 57.—9th January 1935.—Babu Radha Raman Chatarji, Inspector, is granted 1 month and 12 days' leave on average pay with effect from 2-1-1935, a.m. He is permitted to prefix to his leave Sunday, the 23rd December 1934, and the gazetted holidays from the 24th December 1934 to the 1st January 1935, both days inclusive.

Babu Amarendra Kumar Sen, officiating Inspector, is granted 1 month's leave on average pay, on medical certificate, with effect from 2-1-1935, a.m. He is permitted to prefix to his leave Sunday, the 23rd December 1934, and the gazetted holidays from the 24th December 1934 to the 1st January 1935, both days inclusive.

C. E. S. FAIRWEATHER,

Deputy Inspector-General of Police (offg.).

Rajshahi Division—Jalpaiguri.

No. 4J.—2nd January 1935.—It is hereby notified for general information that, under rule 20 (*b*) of the manual of rules for the management of charitable hospitals and dispensaries under the supervision of the Government of Bengal, Babu Tek Prosad Prodhan and Babu Bidday Rai are appointed as members of the committee for the management of the hospital at Pedong in the district of Darjeeling, *vice* Dr. Indramoni Roy and Mr. Madan Kumar Prodhan, who left the place permanently.

No. 67J.—10th January 1935.—Maulvi Abdul Wadud, Sub-Deputy Collector, Dinajpur, is allowed leave on average pay for four days, with effect from the 26th November 1934, under rule 81 (*b*) (*ii*) of the Fundamental Rules.

No. 78J.—11th January 1935.—Babu Dinesh Chandra Sen Gupta, Sub-Deputy Collector, Pabna, is posted to Sadar Circle of that district to work as Circle Officer.

The posting is made in the public interest.

F. W. ROBERTSON, *Commissioner.*

Malda, the 22nd November 1934.

Under rule 32A of the election rules under the Local Self-Government Act, it is notified for general information that the 7th February 1935 and the 9th February 1935 have been fixed for the general election of members for the Malda local board in the following thanas:—

Name of thana.	Number of members.
English Bazar-Bholahat	... 1
Kaliachak	... 1
Manikchak-Ratua	... 1
Shibganj-Kaliachak	... 1
Shibganj	... 1
Nawabganj	... 1
Nachole-Gomastapur	... 1
Malda-Habibpur	... 1
Gazole-Bamongola	... 1
Kharba	... 1
Harischandrapur	... 1
Ratua	... 1

J. N. TALUKDAR, *District Magistrate.*

No. 3J.R.—9th January 1935.—It is hereby notified under rule 19 (*5*) of the Legislative Assembly Electoral Rules that Maulvi Abdulyahel Baqui, a duly nominated candidate in the Rajshahi Division Muhammadan Constituency of the Legislative Assembly, has lodged his return of election expenses and declaration with the Returning Officer on the 5th January 1935. They can be inspected in the office of the Commissioner, Rajshahi Division, in office hours on payment of a fee of Re. 1.

No. 9J.R.—11th January 1935.—It is hereby notified under rule 19(5) of the Legislative Assembly Electoral Rules that Babu Akhil Chandra Dutta, a duly nominated candidate in the Chittagong and Rajshahi Divisions non-Muhammadan Constituency of the Legislative Assembly, has lodged his return of election expenses and declarations with the Returning Officer on the 9th January 1935. They can be inspected in the office of the Commissioner, Rajshahi Division, in office hours, on payment of a fee of Re. 1.

F. W. ROBERTSON, *Commissioner,*

Rajshahi Division and Returning Officer.

Orders by the Deputy Inspector-General of Police, Rajshahi Range.

Jalpaiguri.—No. 51.—4th January 1935.—Babu Pahalman Singh, Inspector, Darjeeling, is granted 8 days' leave on average pay, under rule 81 (*b*) (*ii*) of the Fundamental Rules, with effect from the 2nd January 1935.

He is permitted to prefix to his leave Sunday, the 23rd December 1934, and the gazetted holidays from the 24th December 1934 to the 1st January 1935.

Maulvi Shah Abdur Rahman, Inspector, Bogra, is granted 2 months' privilege leave, under article 260 of the Civil Service Regulations (New Leave Rules), with effect from the 2nd January 1935. He is permitted to prefix to his leave Sunday, the 23rd December 1934, and the gazetted holidays from the 24th December 1934 to the 1st January 1935.

Sub-Inspector Rajendra Lal Ray of Bogra is appointed to act as Inspector in the vacancy.

Babu Ananta Prasad Das, Office Inspector, Bogra, is granted 15 days' leave on average pay, under rule 81 (*b*) (*ii*) of the Fundamental Rules, with effect from the 2nd January 1935. He is permitted to prefix to his leave Sunday, the 23rd December 1934, and the gazetted holidays from the 24th December 1934 to the 1st January 1935.

F. P. WALKER,

Deputy Inspector-General of Police.

Registered No. C207

The Calcutta Gazette

THURSDAY, JANUARY 17, 1935.

PART IA

Orders and Notifications by the Government of India republished for general information.

FOREIGN AND POLITICAL DEPARTMENT.

Order of the Star of India.

NOTIFICATION.

New Delhi, the 1st January 1935.

No. 2-S.I.—His Excellency the Grand Master of the Most Exalted Order of the Star of India is pleased to announce that His Imperial Majesty the King, Emperor of India, has been graciously pleased to give orders for the following appointments to the said Order:—

To be an Honorary Knight Grand Commander.

Lieutenant-General His Highness Ojaswi Rajanya Projjwala Nepala Tara Ati Pravala Gorkha Dakshina Bahu Prithuladheesha Sri Sri Sri Maharaja Sir Joodha Shumshere Jung Bahadur Rana, G.C.I.E., Honorary Colonel of all Gurkha Rifle Regiments in the Indian Army, Prime Minister and Supreme Commander-in-Chief, Nepal.

* * * * * *

B. J. GLANCY,

Secretary to the Most Exalted Order of the Star of India.

FOREIGN AND POLITICAL DEPARTMENT.

Order of the Indian Empire.

NOTIFICATION.

New Delhi, the 1st January 1935.

No. 3-I.E.—His Excellency the Grand Master of the Most Eminent Order of the Indian Empire is pleased to announce that His Imperial Majesty the King, Emperor of India, has been graciously pleased to make the following promotions in, and appointments to, the said Order:—

* * * * * *

To be Companions.

* * * * * *

Basil Camden Prance, Esquire, Indian Civil Service (Retired), District Magistrate of Dacca, Bengal.

* * * * * *

Khan Bahadur Muhammad Abdul Mumin, M.L.C., lately Commissioner of the Chittagong Division, Bengal.

* * * * * *

Thomas Clarke Crawford, Esquire, of Messrs. James Finlay & Co., Planter and *ex*-President of the Tea Association, Calcutta.

* * * * * *

B. J. GLANCY,

Secretary to the Most Eminent Order of the Indian Empire.

FOREIGN AND POLITICAL DEPARTMENT.

Order of the British Empire.

NOTIFICATION.

New Delhi, the 1st January 1935.

No. 5-H.—His Imperial Majesty the King, Emperor of India, has been graciously pleased to give orders for the following appointments to the Most Excellent Order of the British Empire:—

TO BE OFFICERS.

Civil Division.

* * * * * *

Vernon William Farquharson Hicks, Esquire, Additional Superintendent of Police, Chittagong, Bengal.

* * * * * *

B. J. GLANCY,
Poltl. Secy. to the Govt. of India.

FOREIGN AND POLITICAL DEPARTMENT.

Knighthood.

NOTIFICATION.

New Delhi, the 1st January 1935.

No. 7-H.—His Imperial Majesty the King, Emperor of India, has been graciously pleased to confer the honour of Knighthood on:—

* * * * * *

Lieutenant-Colonel Clendon Turberville Daukes, C.I.E., of the Political Department, His Majesty's Envoy Extraordinary and Minister Plenipotentiary at the Court of Nepal.

The Honourable Mr. Justice Manmatha Nath Mukerji, Puisne Judge of the High Court of Judicature at Fort William, Calcutta, Bengal.

* * * * * *

Walter Merry Craddock, Esquire, D.S.O., M.C., Senior Partner, Messrs. Place Siddons and Gough, and lately Sheriff of Calcutta, Bengal.

* * * * * *

B. J. GLANCY,
Poltl. Secy. to the Govt. of India.

FOREIGN AND POLITICAL DEPARTMENT.

Kaisar-i-Hind Medal.

NOTIFICATIONS.

New Delhi, the 1st January 1935.

No. 8-H.—His Excellency the Viceroy and Governor-General is pleased to announce that His Imperial Majesty the King, Emperor of India, has been graciously pleased to award the Kaisar-i-Hind Medal of the First Class for Public Service in India to:—

* * * * * *

Gottfried Oram Teichmann, Esquire, Medical Missionary of the Baptist Mission, Chandraghona, Chittagong Hill Tracts, Bengal.

No. 9-H.—His Excellency the Viceroy and Governor-General is pleased to award the Kaisar-i-Hind Medal of the Second Class for Public Service in India to:—

* * * * * *

Sylvia Sarah, Mrs. Judah (wife of Edward Judah, Esq., Merchant), Calcutta, Bengal.

* * * * * *

No. 10-H.—His Excellency the Viceroy and Governor-General is pleased to award the Kaisar-i-Hind Medal of the Third Class for Public Service in India to:—

* * * * * *

Babu Promode Kumar Bose, President, Damodar Union Board, Khulna District, Bengal.

* * * * * *

Girija Kanto Karanjai, Esquire, Medical Officer, Rajshahi District Board, in charge of Kaligram District Board Dispensary, Rajshahi, Bengal.

* * * * * *

Babu Jadab Chandra Routh, Sub-Inspector of Police, Officer in charge of Manda Police Station, Rajshahi District, Bengal.

Babu Sasi Bhusan Roy, President, Jarur Union Board, Murshidabad District, Bengal.

* * * * * *

B. J. GLANCY,
Poltl. Secy. to the Govt. of India.

FOREIGN AND POLITICAL DEPARTMENT.

NOTIFICATIONS.

New Delhi, the 1st January 1935.

No. 12-H.—His Excellency the Viceroy and Governor-General is pleased to confer upon the Honourable Nawab Khwaja Habibullah, of Dacca, Bengal, the title of Nawab Bahadur, as a personal distinction.

No. 19-H.—His Excellency the Viceroy and Governor-General is pleased to confer the title of Sardar Bahadur, as a personal distinction, upon—

* * * * * *

Honorary Lieutenant Gobardan Gurung, Subadar Major, late of 2/10th Gurkha Rifles, Honorary Aide-de-Camp to His Excellency the Governor of Bengal.

* * * * * *

No. 20-H.—His Excellency the Viceroy and Governor-General is pleased to confer the title of Khan Bahadur, as a personal distinction, upon—

* * * * * *

Maulvi Muhammad Mobarak Ali, Village Nalta, Post Office Nalta, Khulna, Bengal.

Khan Sahib Maulvi Hafez Muhammad Husain, Merchant, Zinzira, Post Office Keraniganj, Dacca, Bengal.

Khan Sahib Munshi Muhammad Ibrahim, Secretary, Central Co-operative Bank, Bogra, Bengal.

Khan Sahib Maulvi Khabiruddin Ahmad, Second Inspector of Schools, Bengal.

Maulvi Abdur Rashid Khan, Deputy Superintendent of Police, Bengal.

Maulvi Abdus Sattar, Pleader, Jalpaiguri, Bengal.

* * * * * *

No. 21-H.—His Excellency the Viceroy and Governor-General is pleased to confer the title of Rai Bahadur, as a personal distinction, upon—

Babu Panna Lal Mukherjee, Zemindar, Uttarpara, Bengal.

Babu Karali Charan Gangali, Deputy Magistrate and Deputy Collector (on leave preparatory to retirement), Bengal.

Babu Kshirode Chandra Roy, Zemindar and Vice-Chairman, District Board, Chittagong, Bengal.

Rai Sahib Tarakeswar Bhattacharji, Deputy Commissioner of Excise and Salt, Bengal.

* * * * * *

No. 24-H.—His Excellency the Viceroy and Governor-General is pleased to confer the title of Khan Sahib, as a personal distinction, upon—

* * * * * *

Esmailji Hassan Bhoy, 30, Strand Road, Calcutta, Bengal.

Maulvi Chowdhury Abdur Rashid, President, Singhi Union Board, Police Station Bolpur, Birbhum District, Bengal.

Maulvi Abdul Wadud Chowdhury, Pleader and Chairman, Local Board, Kishoreganj, Bengal.

Mr. Ali Haider Chaudhury, Honorary Magistrate, Feni, Bengal.

Maulvi Amiruddin Sarkar, Jotedar, Raseya, Thakurgaon, Dinajpur, Bengal.

Maulvi Muhammad Ziaul Huq, Superintendent, Rajshahi Madrasah, Bengal.

Munshi Abbas Ali Sardar, President, Durgapur Union Board, Tippera, Bengal.

Subedar Golam Khan, Inspector of Police, Nadia, Bengal.

Maulvi Muhammad Ismail, Pleader, Judge's Court, Faridpur, Bengal.

Maulvi Motasem Billa, Head Assistant, Office of the Director of Land Records, Bengal.

* * * * * *

Babu Kafiluddin Choudhury, Shedman-in-charge, Eastern Bengal Railway, Calcutta, Bengal.

* * * * * *

No. 25-H.—His Excellency the Viceroy and Governor-General is pleased to confer the title of Rai Sahib, as a personal distinction, upon—

Mr. Srish Chandra Sarkar, Assistant Medical Officer, Deoli Jail.

Babu Nepal Lal Mallik, Assistant Commissioner, Arms Act Department, Calcutta, Bengal.

Mr. Santi Mohan Ghosh, Raniganj Leper Asylum, Asansol, Bengal.

Babu Nishi Kanta Ray, Honorary Magistrate, Manikganj, Dacca, Bengal.

Babu Aparna Charan Ray Chaudhuri, Honorary Magistrate, Chittagong, Bengal.

Babu Sushil Chandra Banarji, Head Assistant, Appointment Department, Government of Bengal.

Babu Surendra Nath Bhattacharji, Pleader, Siliguri, Bengal.

Mr. Nirmal Chandra Basu, Assistant Fibre Expert, Bengal.

Babu Aravinda Banarji, Interpreter and Translator, Original Side, High Court, Calcutta, Bengal.

* * * * * *

Mr. Narendra Chandra Sen, Assistant Superintendent (Howrah Goods) (Local Traffic Service), East Indian Railway, Calcutta.

* * * * * *

Babu Beli Ram, Superintendent, Office of the Chief Inspector of Explosives with the Government of India, Calcutta.

Mr. Ashutosh Sarkar, Superintendent of Post Offices, Bengal and Assam Circle.

B. J. GLANCY,
Poltl. Secy. to the Govt. of India.

HOME DEPARTMENT.

King's Police Medal.

NOTIFICATION.

(POLICE.)

New Delhi, the 1st January 1935.

No. F.-25/VII/34-Police.—His Majesty the King, Emperor of India, has been pleased to confer the King's Police Medal, and in two cases a bar to the Medal previously awarded, on the following officers and men of the Indian Police establishments:—

* * * * * *

Bengal.

*3. *Ram Singhasan Singh, Head Constable.*—On receipt of information of a dacoity at the Hili Station at about 4 a.m. on 28th October 1933, the officer-in-charge, Phulbari police-station, despatched head constable Ram Singhasan Singh (then constable) to the spot. The constable set off at once and reached Charkai where he heard of some suspicious youths passing towards Chintamon *en route* to village Samjia. Following this clue, he overtook the dacoits a few miles further on and, pretending to be a jute "dalal," succeeded in allaying their suspicion. He kept the youths in view, sometimes going ahead and sometimes falling back, ostensibly making enquiries about the price of jute, but actually arranging with villagers and rural police to cut off their retreat. When the dacoits stopped to rest at Kutubpur, he pushed on to Samjia where he asked for help from the local zamindar who, at his suggestion, sent two men on cycles to provide the dacoits with carts and to arrange with the carters to bring the youths quickly to Samjia ghat. He also arranged with the ferryman to keep the big boat on the far side of the river, thus ensuring that it would be a long while after the arrival of the dacoits before the boat would be brought to Samjia ghat. On arrival the dacoits were arrested with the help of villagers, the constable himself, though unarmed, grappling with and arresting one of the dacoits who was armed with a revolver. From the time of his departure from the police station at 4 a.m. to the time of arrest the constable was without food. He displayed remarkable intelligence and resource in dispelling suspicion and thus succeeded in effecting, with the help of the villagers, the arrest of all seven dacoits and the recovery of their firearms and booty. He was in considerable danger throughout the period he maintained contact with them and displayed conspicuous courage in attacking an armed criminal.

4. *Mukunda Lall Bhattacharji, Officiating Inspector.*—In 1923 this officer was one of a police party who captured a gang of armed Punjabis about to commit a dacoity and subsequently rendered conspicuous services on three occasions in tracing and arresting dangerous offenders. Since joining the Calcutta Police he has been responsible for investigating and prosecuting fifteen important cases. On one occasion he was engaged in the arrest of three armed absconders who had been located in a room and, on failing to get any response to his knocks on the door, moved to the window, through which he was shot in the shoulder. In spite of his wound he gave the alarm on seeing one of the men escaping and gallantly kept the police party posted as to his movements. He is an officer whose devotion and courage in discharging his duties has marked him as one deserving recognition.

5. *Abu Ahiya Bazle Murshedi, Officiating Inspector of Police.*—This officer has been responsible for the arrest of nine important absconders and has taken part in the investigation of several serious cases. For the last few years he has been placed in charge of the protective arrangements during His Excellency the Viceroy's annual visits to Calcutta. He has rendered noteworthy services on two occasions of dangerous disturbance in Calcutta and in connection with an Arms Act case, in which two persons were arrested with loaded revolvers, himself arrested one of the accused who was attempting to escape. In an engagement with three armed absconders who shot a police officer in resisting arrest, the Inspector followed one of the wanted men who was attempting to escape on to the roof, in spite of shots fired by the absconder. The Inspector deserves recognition for the devotion and courage which have marked the discharge of his duties in general.

6. *Manindra Lal Das Gupta, Officiating Inspector of Police.*—This officer has been continuously on duty in a particularly lawless area since December 1932 where he has rendered very valuable services and earned the appreciation of Government. He has been in constant personal danger and has displayed remarkable courage and devotion to duty throughout.

* * * * * *

N.B.—The awards in the case of officers marked with an asterisk are for conspicuous gallantry. Officers of and below the rank of Inspector of Police so marked are eligible for the allowances sanctioned in the Home Department letter No. F.-25/IV/28-Police, dated the 7th February 1930.

M. G. HALLETT,
Secy. to the Govt. of India.

HOME DEPARTMENT.

Indian Police Medal.

NOTIFICATION.

New Delhi, the 1st January 1935.

No. F.-114/XXXVII/34-Police. — His Excellency the Viceroy and Governor-General of India has been pleased to confer the Indian Police Medal, and in one case a bar to the

Medal previously awarded, on the following officers:—

* * * *

Bengal.

19. *Rai Sahib Provat Nath Mukherji, Assistant Commissioner of Police.*—The recent capture of an armed and dangerous offender for which this officer was personally responsible is an instance of the zeal and devotion to duty which have marked his long and meritorious service.

20. *A. K. Robertson, Assistant Commissioner of Police.*—Mr. A. K. Robertson joined the Calcutta Police as a Sub-Inspector in the year 1914 and for six years worked in various police-stations in Calcutta. In 1920 he was specially selected for the Detective Department and in 1922 promoted to the rank of Inspector. He has displayed conspicuous ability in the investigation of commercial and bank frauds. In 1929 he was promoted to the rank of Assistant Commissioner and rendered valuable services during the Civil Disobedience movement. He has done much good work recently and has been responsible for the detection of a serious burglary case, his information leading to the recovery of stolen jewellery worth Rs. 65,000. Throughout his service Mr. Robertson has displayed marked detective ability and devotion to duty.

21. *K. Tolson, Assistant Superintendent of Police.*—On the 22nd November 1933, Mr. Tolson received information that a dacoity would probably be committed that night at a village 15 miles away. Taking a small party of police he hastened to the spot, partly on horse-back and partly on foot, and waited in ambush all night, but the dacoits did not appear. No sooner had he returned to his headquarters than he was again informed that the dacoity would take place that night and again proceeded to the village with a handful of police and lay in ambush. At about 1 a.m. some forty armed dacoits arrived and attacked a house, seriously injuring the inmates. Mr. Tolson and his men rushed to their assistance and overcame the dacoits. Mr. Tolson himself killing three with his revolver. A number were wounded and captured and the rest took to flight, but several were apprehended later and a very formidable gang of dangerous criminals who had assembled from all parts of the district was successfully broken up. Mr. Tolson showed remarkable initiative, perseverance and courage and his conduct was an example to the whole police force of the district.

22. *Babu Phanindra Nath Sen, Inspector of Police.*—Having worked as a Thana, Reserve and Court officer from 1919 till 1926, during which period he earned 15 rewards, this officer was selected for work in the Central Intelligence Branch, Bengal, and was later attached to the Protective Staff of the Calcutta Police, Special Branch. He worked well until 1932, when he was transferred to the Additional Staff of the Special Branch and promoted to the rank of Inspector. During this period he earned about 21 rewards and applied himself with great keenness to intelligence work. He has rendered most valuable service and on one occasion was personally responsible for the arrest of a very dangerous absconder.

23. *Babu Jogendra Chandra Das, Sub-Inspector of Police.*—This officer has worked in the Chittagong area since December 1932 and has carried out his duties efficiently, cheerfully and tactfully. He has gained the complete confidence of the local inhabitants of his thana and they are now giving active support to the police. He has shown remarkable perseverance and skill in investigation and rendered very valuable services.

24. *Babu Satish Chandra Barua, Sub-Inspector of Police.*—This officer has done exceptionally good work in the District Intelligence Branch, Chittagong, which he joined in April 1932. He has carried out his difficult duties very efficiently indeed and worked with enthusiasm in spite of personal risk.

25. *James Dwyer, Inspector of Police.*—James Dwyer was appointed as a Sergeant in the Calcutta Police from the British Army in 1919. He was promoted to officiate as an Inspector in 1926 and was confirmed in that rank in 1927. In 1930 he received the appreciation and thanks of the Bengal Government for the bravery which he displayed during the April riots. During the last five years he has been responsible for many of the traffic schemes now working successfully in Calcutta and has earned commendation from all quarters for the excellence of the traffic arrangements which he has made on many important occasions. He is a capable organiser and has handled the various problems given to him with initiative, foresight and thoroughness, and his services have been of immense value to the Headquarters Staff.

26. *Babu Bejoy Krishna Das, Sub-Inspector of Police.*—Since his transfer to the Special Branch in 1924, where he has earned 22 rewards, he has proved himself a very keen and energetic officer. He has secured most valuable information on many occasions.

27. *Babu Jamuna Singh, Officiating Inspector of Police.*—Jamuna Singh joined the Bengal Police with a good military record, including service in the Afghan War, in Mesopotamia and on the North-West Frontier. He has for two years been on duty at the Hijli Detention Camp where he has displayed tact, patience and marked assiduity. He has proved himself worthy of the heavy responsibilities placed on his shoulders, is regarded by his superior officers as absolutely trustworthy and indefatigable and has earned the respect of the detenus both as a man and as an officer.

* * * *

M. G. HALLETT,
Secy. to the Govt. of India.

FINANCE DEPARTMENT (CENTRAL REVENUES).

RESOLUTION.

CUSTOMS.

New Delhi, the 5th January 1935.

No. 2.—With reference to the resolution of the Government of India in the Department of Commerce, No. 5474, dated the 19th October 1922, and in supersession of the resolution of the Government of India in the Finance Department (Central Revenues), No. 68-Customs, dated the 23rd December 1933, the Government of India have approved of the appended list of cotton piecegoods which by the usage of trade have been recognised as piecegoods liable to assessment to import duty under Item No. 48(3) of the First Schedule to the Indian Tariff Act, 1934 (which corresponds to Item No. 158C of the Second Schedule to the Indian Tariff Act, 1894).

ORDERED that the foregoing Resolution be published in the *Gazette of India*.

A. J. RAISMAN,
Joint Secy. to the Govt. of India.

List of cotton piece-goods.

Aeroplane cloth (cotton).
Alhambras.
Angolas (cotton).
Apron cloth (cotton).
Austrias and Argentinas (cotton).
Bandage cloth (cotton).
Batistes (cotton).
Beaverteens (cotton).
Billiard cloth (cotton) in rolls.
Brilliants.
Brocades (cotton).
Broche.
Buckram (cotton).
Calicoes.
Cambrics, plain, dyed or printed.
Cantoons.
Canvas (cotton).
Canvas, French elastic (cotton).
Casement cloth (cotton).
Cashmeres (cotton).
Cellular cloth.
Checks, spots and stripes.
Chiffons (cotton).
Chinese dyed cloths.
Chintz, glazed or unglazed.
Choonris.
Chadars.
Chadar-pattas.
Coatings (cotton) including gabardines.
Corduroy and corded cloth (cotton).
Cotton flakes.
Crapes (cotton).
Crash (cotton).
Crepons (cotton).
Cretonnes.
Crimps (cotton).
Damask, cotton, table.
Dawanies.
Delaines (cotton).
Delametti.
Denims.
Dhotis.
Diagonals (cotton).
Diapers (cotton).
Dimity.
Domestics.
Domettes (cotton).
Dorias.
Dosooti.
Dress, plain or printed (cotton).
Drills, plain, striped or checked.
Duck.
Dungari.
Dupettas.
Embroidered flounces.
Fents (cotton) more than four yards in length.
Filter cloth (cotton).
Finduras.
Flannelette (cotton flannel).
Frieze cloth (cotton).
Galateas.
Grambroons.
Gauze (cotton).
Ghagras (cotton).
Ginghams (cotton).
Grenadines (cotton).
Gumchas.
Hair-cords.
Harvards.
Holland and blind cloth (cotton).
Hollands (cotton).
Italians (cotton), not of sateen weave.
Jaconets, plain or bordered.
Jeans, plain, dyed or printed.
Lace curtain cloth, not knitted.
Lace stripes.
Lambskins (cotton).
Lapets.
Lastings.
Lawns.
Lenos.
Limbrics (cotton).
Linenette (cotton).
Linings, plain, striped or mercerised.
Longcloths.
Lungis.
Lustres (cotton).
Madapollams.

Madras cloth.
Marcella.
Matte shirtings.
Matting (cotton).
Mattress cloth.
Meltons (cotton).
Mercerised cloth.
Merinos (cotton).
Merins.
Mexicans.
Moleskins (cotton).
Molleton cloth.
Morias.
Moreens (cotton).
Mulls, all kinds, plain or bordered.
Muslins (cotton), all kinds.
Nainsooks.
Net (cotton), not knitted.
Nun's veiling (cotton).
Oatmeal cloth.
Pacalene, black (cotton).
Pagri cloth.
Penelope canvas.
Pillow calico, tubular.
Piques.
Plumettiffs (cotton).
Plushette.
Pocketing (cotton).
Pompadour.
Pongees (cotton).
Poplins and Poplinettes (cotton).
Printed crepelle.
Prints.
Printers (plain and coloured).
Putsoes.
Quiltings (cotton).
Radium cloth.
Regattas.
Rep cloth (cotton).
Sail cloth (cotton).
Saris.
Sarongs.
Sateens, plain, dyed or printed, not of five threads weave and upwards in which the weft thread predominates on the upper surface.
Satinette, not of five threads weave and upwards in which the weft thread predominates on the upper surface.
Satin stripes (cotton), not of five threads weave and upwards in which the weft thread predominates on the upper surface.
Serges (cotton).
Sheetings.
Shirtings.
Silecia.
Silkette, plain or stripes.
Spanish stripes (cotton).
Sponge cloth (cotton).
Suraline.
Sussi cloth.
Suitings (cotton).
Swansdown calico.
Taffettas (cotton).
Tambours.
Tameins (unfinished).
Tanjibs.
Tapestries (cotton).
Tarlatans.
T cloths.
Ticking mattress or blind (cotton).
Towel cloth including Terry cloth.
Tricot (cotton).
Trouserings (cotton).
Tulle (cotton), not knitted.
Turbans (cotton).
Turkey red cloth.
Tussor cloth (cotton) and Tussorette.
Tweeds (cotton).
Twills (cotton) plain, dyed or printed.
Umbrella cloth (cotton).
Valencias.
Venetian cloth (cotton).
Vestings or waist-coatings (cotton).
Voils (cotton).
Zephyrs.

DEPARTMENT OF COMMERCE.

NOTIFICATION.

REGISTRATION OF ACCOUNTANTS.

New Delhi, the 5th January 1935.

No. 3 (9)-T. & E. (R.A.).—The following draft of an amendment to the Auditor's Certificates Rules, 1932, which it is proposed to make in exercise of the powers conferred by sub-section (*2*) of section 144 of the Indian Companies Act, 1913 (VII of 1913), is published as required by the said sub-section, for the information of all persons likely to be affected thereby, and notice is hereby given that the said draft will be taken into consideration on or after the 21st January 1935.

Any objection or suggestion which may be received from any person with respect to the draft before the said date will be considered by the Governor-General in Council:—

Draft Amendment.

To rule 13 of the said Rules, the following Explanation shall be added, namely:—

"*Explanation.*—A certificate granted at any time during the financial year 1934-35 shall be valid until the 30th June 1935, notwithstanding the fact that it was granted with validity only up to the 31st March 1935."

T. A. STEWART,
Secy. to the Govt. of India.

CENTRAL BOARD OF REVENUE.

NOTIFICATIONS.

CUSTOMS.

New Delhi, the 5th January 1935.

No. 1.—In exercise of the powers conferred by section 11 of the Sea Customs Act 1878 (VIII of 1878), the Central Board of Revenue directs, that the following amendments shall be made in the schedule appended to its notification No. 27-Customs, dated the 12th July 1930.

Substitute the following for the existing entries relating to Wharf No. 5 of the Port of Cocanada:—

Name of the port.	No. of wharf.	Name of the owner.	Limits of the wharf.	Particulars of the classes of goods to be dealt with.	The manner of dealing with them.
1	2	3	4	5	6
Cocanada ..	4-A	Burmah Shell Oil Storage and Distributing Co. of India Limited.	6′ broad Iron Jetty with gangway 30′ East half and 24′ West half on the North bank of Cocanada river. East to West 50′ from Western limit of No. 4 wharf and 280′ East of A. Iron Jetty No. 6 Wharf.	1. Free cargo 2. Kerosine and fuel oil dutiable.	Landing and shipping. Special permission to be obtained on each occasion. Landing.
Do. ..	5	Government ..	North bank of Cocanada river. West of No. 4-A. Jetty and East of No. 6 Jetty measuring 280′ in length.	Free cargo ..	Landing and shipping. Special permission is to be obtained on each occasion.

No. 3.—In exercise of the powers conferred by section 11 of the Sea Customs Act, 1878 (VIII of 1878), the Central Board of Revenue directs that the following additions shall be made to the list of wharves at the port of Masulipatam in the Schedule appended to Customs notification No. 27, dated the 12th July 1930, of the Central Board of Revenue:—

Name of port.	No. of Wharf.	Name of owner.	Limits of the wharf.	Particulars of classes of goods to be dealt with.	Remarks.
1	2	3	4	5	6
Masulipatam	1-A.	Government	The North Eastern bank of the Masulipatam backwater measuring 100 feet towards the North Eastern portion of Gilakaladindy village, terminating with the Customs bunk, bounded on the South East by the Port land, on the North West by the Port land, on the North East by the Port land and on the South West by the Masulipatam backwater.	A place where all boats whether laden or empty proceeding to or returning from steamers and other vessels in the roads must call for Customs examination.	

No. 4.—In exercise of the powers conferred by clause (*c*) of section 9 of the Sea Customs Act 1878 (VIII of 1878), and in modification of orders contained in Customs notification No. 30, dated the 19th May 1934, the Central Board of Revenue makes the following rule:—

Rule.

All cargo boats, whether laden or empty, proceeding to or returning from vessels anchoring in the roads at the port of Masulipatam shall call at the Customs Wharf No. 1-A. for examination.

No. 5.—In exercise of the powers conferred by section 100 of the Sea Customs Act, 1878 (VIII of 1878), the Central Board of Revenue makes the following rules to regulate the canning of kerosene oil from the stock imported and warehoused by the Standard Vacuum Oil Company in their bonded tank at Bombay licensed under section 16 of the said Act and the transfer of the oil, after such canning into a bonded wharehouse licensed under the said section:—

1. Before any operation contemplated by these rules is performed an application shall be made to the Customs Collector in such form as may be prescribed by the Chief Customs Officer stating the approximate quantity of oil to be discharged from the bonded tank and applying for the services of the Customs Officers required to supervise the operation.

2. The Customs Officer deputed in this behalf shall prior to and after the discharge of oil record the measurements of the tank with a view to ascertaining the actual quantity of oil drawn off from the tank for purposes of the operation.

3. The oil so drawn off shall be conveyed to the filling machines by means of pipe lines segregated from the other lines in the installation by suitable valves which should be sealed with customs seals during the progress of the operation.

4. No other filling operations shall be conducted in the filling shed while filling from the bonded tank is in progress.

5. The filled tins shall be removed without delay to the special storage enclosure provided for this purpose and duly licensed as a private warehouse under the provisions of section 16 of the Sea Customs Act.

6. After completion of the operation the quantity of oil drawn off into the tins lodged in the bonded enclosure shall be ascertained by gauging the contents of such percentage of the tins as may be prescribed by the Chief Customs Officer. Duty shall be recoverable on any deficiency between the quantity so ascertained and that originally discharged from the bonded tank.

7. Fees shall be charged for the services of the Customs Officers employed for supervising each stage of an operation at the rates prescribed in the rules governing the conduct of work applied for by owners of goods on Sundays, holidays or working days. The fees payable shall be recovered on the completion of each operation.

R. R. SAKSENA,
First Secy., Central Board of Revenue.

DEPARTMENT OF EDUCATION, HEALTH AND LANDS.

NOTIFICATION.

GENERAL.

New Delhi, the 20th December 1934.

No. F.-33-2/34-G.—In exercise of the powers conferred by sub-section (1) of section 213 of the Indian Merchant Shipping Act, 1923 (XXI of 1923), the Governor-General in Council is pleased to direct that the following further amendments shall be made in the Indian Pilgrims Ships Rules, 1933, the same having been previously published as required by sub-section (3) of the said section, namely:—

(1) Rule 71 of the said Rules shall be omitted.

(2) For rule 80 of the said Rules, the following rule shall be substituted, namely:—

"80. (1) Every pilgrim, other than a pilgrim of the lowest class, shall be provided by the master of the ship daily throughout the voyage with—

(*i*) morning tea;
(*ii*) breakfast;
(*iii*) luncheon;
(*iv*) afternoon tea; and
(*v*) dinner.

(2) Every pilgrim of the lowest class shall be provided by the master of the ship daily throughout the voyage with food on the following scale—

(*a*) *Morning tea*—

(*i*) One cup of tea.
(*ii*) Two biscuits or one chapati, according to the pilgrim's choice.

(*b*) *Day meal*—

(*i*) Rice or chapatis, according to the pilgrim's choice, in such quantity as the pilgrim may require.
(*ii*) One plate of mutton and vegetable mixed, on alternate days.
(*iii*) One plate of vegetable dish, with or without dry fish according to the pilgrim's choice, on days on which item (*ii*) above is not supplied.
(*iv*) Dal in such quantity as the pilgrim may require.
(*v*) Kachumar or pickles.

(*c*) *Afternoon tea*—

One cup of tea.

(*d*) *Evening or night meal*—

(*i*) Rice or chapatis, according to the pilgrim's choice, in such quantity as the pilgrim may require.
(*ii*) One plate of vegetable dish.
(*iii*) Dal in such quantity as the pilgrim may require.
(*iv*) Kachumar or pickles.

(3) Every pilgrim of the lowest class shall, at the time of buying his ticket, inform the person who issues the ticket—

(*i*) whether he will take rice or chapatis for the day meal and the evening or night meal; and
(*ii*) whether he will or will not have dry fish with the vegetable dish to be served on alternate days at the time of the day meal."

(3) In rule 81 of the said Rules—

(*i*) for the words, brackets and figures "sub-rules (2) and (3)", the words, brackets and figures "sub-rules (1) and (2)" shall be substituted;

(*ii*) for the entry

"Curry and rice ... 0-7-0 per plate",

the entry

"Curry and rice ... 0-6-0 per plate",

shall be substituted;

(*iii*) for the entry

"Paratha ... 0-3-0 each"

the entry

"Paratha ... 0-2-0 each"

shall be substituted;

(*iv*) for the entry

"Sweetmeats ... 0-6-0 per plate"

the entry

"Sweetmeats ... 0-6-0 per seer of 28 tolas"

shall be substituted;

(*v*) for the entry

"Lemonade and other aerated waters (sweet) ... 0-2-3 per bottle"

the entry

"Lemonade and other aerated waters (sweet) ... 0-2-0 per bottle"

shall be substituted; and

(*vi*) for the entry

"Apples ... 0-1-0 each"

the entry

"Apples ... 0-2-0 each"

shall be substituted.

(4) In rule 86 of the said Rules, after the words "Every pilgrim", the words "of the lowest class" shall be inserted.

(5) For rule 87 of the said Rules the following rule shall be substituted, namely:—

"87. In the case of pilgrims of the lowest class, the food to be supplied to them under sub-rule (2) of rule 80 shall be distributed at such places and subject to such arrangements as the Inspector may consider suitable."

(6) In clause (*i*) of rule 88 of the said Rules, the words, brackets and figure "or sub-rule (3)" shall be omitted.

(7) In sub-rule (1) of rule 89 of the said Rules, for the words, brackets and figures "sub-rules (2) and (3)", the words, brackets and figures "sub-rules (1) and (2)" shall be substituted.

(8) In Table A annexed to rule 110 of the said Rules, after the entry "Papers for powders, etc. ... 1 quire" the following entry shall be inserted, namely:—

"Tannic Acid Outfit for Burns ... 1"

(9) For sub-rules (4) and (5) of rule 118 of the said Rules, the following sub-rules shall be substituted, namely:—

"(4) Latrines shall not be allowed either in the between decks or in the holds. They shall be in a convenient and accessible place on the upper deck and, in the case of temporary latrines, they shall be constructed of steel or other durable material approved by the Governor General in Council and shall be placed close up to the bulwarks or rails. No latrine shall project over the ship's side. Every latrine shall be divided into separate and private compartments and each compartment shall not be less than 3 feet by 2 feet in area and shall have a separate entry fitted with a door which can be secured with a hook or bolt from the inside. Every compartment shall be well ventilated by means of such openings as will not interfere with privacy and shall be provided with efficient lighting to the satisfaction of the Inspector.

(5) All latrines shall be of a design approved by the Governor General in Council. They shall be maintained in good order and shall be disinfected not less than three times a day when pilgrims are on board."

(10) In sub-rule (2) of rule 124 of the said Rules, for the words "a British Indian Pilgrim" the words "an Indian pilgrim" shall be substituted.

(11) In Form V appended to the said Rules—

(*i*) in Part I in the fourth column of the tabular statement relating to anti-cholera inoculation certificate, for the words "Name and Dsignation", the words "Name and designation" shall be substituted; and

(*ii*) in Part II in the third sub-column of the second column in the tabular statement relating to final disposal of holder's deposit, if any, under clause (*b*) of section 208-A, for the word "refund" the word "payment" shall be substituted.

RAM CHANDRA,
Joint Secy. to the Govt. of India.

ARMY DEPARTMENT.

New Delhi, the 29th December 1934.

Part A.

No. 697.—The following promotions are made, subject to His Majesty's approval:—

* * * *

INDIAN MEDICAL SERVICE.

Majs. to be Lt.-Cols.

* * * *

N. B. Mehta, L.R.C.P. & S. (Edin.), L.R.F.P. & S. (Glas.), D.P.H. (Cant.). Dated 21st Dec. 1934.

M. A. Singh, M.B. Dated 27th Dec. 1934.

Part B.

JUDICIAL.

No. 710.—In exercise of the powers conferred by section 13 of the Indian Territorial Force Act, 1920 (XLVIII of 1920), the Governor-General in Council is pleased to direct that the following further amendments shall be made in the Indian Territorial

Force Rules, 1921, the same having previously been published as required by sub-section (1) of the said section, namely:—

In rule 17 of the said Rules, in clause (*b*) of sub-rule (1) and in clause (*b*) of sub-rule (4), for the words "for every day of actual attendance at authorised courses of instruction in Army Schools, with regular units or otherwise", the following shall be substituted, namely:—

"for periods of actual attendance at authorised courses of instruction in Army Schools, with regular units or otherwise, including intervening Sundays and holidays."

No. 711.—The following draft of a further amendment to the Indian Territorial Force Rules, 1921, which it is proposed to make in exercise of the powers conferred by section 13 of the Indian Territorial Force Act, 1920 (XLVIII of 1920), is published as required by sub-section (1) of the said section, for the information of all persons likely to be affected thereby, and notice is hereby given that the said draft will be taken into consideration on or after the 29th January 1935.

Any objection or suggestion which may be received from any person with respect to the draft before the said date will be considered by the Governor-General in Council:—

Draft Amendment.

In Part I of Schedule III to the said Rules, to clause (*a*) of item (*ii*) the following shall be added, namely:—

"and provided the officers concerned live, mess and sleep in camp."

LONDON GAZETTE.

No. 712.—The following extracts are published for general information:—

London Gazette, dated the 30th November, 1934, page 7685.

* * * *

India Office,
30th November, 1934.

The KING has approved the following Promotions, Appointments, Retirements, etc.:—

INDIAN ARMY.

* * * *

The undermentioned officers retire:—

* * * *

Lt.-Col. J. A. Brett, C.I.E., 20th June 1934. (Substituted for the notifn. in the Gazette of the 29th June 1934.)

* * * *

G. R. F. TOTTENHAM,
Secy. to the Govt. of India.

FINANCE DEPARTMENT (CENTRAL REVENUES).

NOTIFICATIONS.

SALT.

New Delhi, the 29th December 1934.

No. 47.—In exercise of the powers conferred by section 6 of the Indian Salt Act, 1882 (XII of 1882), the Governor-General in Council is pleased to direct that the following amendment shall be made in the notification of the Government of India in the late Department of Commerce and Industry, No. 3227, dated the 18th May 1918, namely:—

To the said notification, the following proviso shall be added, namely:—

"Provided that in the areas within the jurisdiction of thanas Contai, Ramnagar, Khejri and Bhagwanpur in the Contai sub-division of the said district of Midnapore, no licence shall be required for the manufacture of salt as a cottage industry for sale to contractors appointed by rule under clause (*e*) of the said section of the Act."

A. H. LLOYD,
Joint Secy. to the Govt. of India.

CENTRAL EXCISES.

New Delhi, the 5th January 1935.

No. 1.—In exercise of the powers conferred by sections 10 and 11 of the Sugar (Excise Duty) Act, 1934 (XIV of 1934), the Governor-General in Council is pleased to direct that the following further amendment shall be made in the Sugar (Excise Duty) Order, 1934, namely:—

In the said Order, for rule 14, the following rule shall be substituted, namely:—

"14. The Local Government may empower any officers of any department under its control to search any place, vessel, cart or means of conveyance for sugar liable to duty and to seize and remove or detain any sugar in respect of which it appears to them that duty should have been but has not been levied or that any contravention of the provisions of the Act or of this Order has occurred".

A. J. RAISMAN,
Joint Secy. to the Govt. of India.

Registered No. C207

The Calcutta Gazette

THURSDAY, JANUARY 17, 1935.

PART IB

Educational Notices.

Chittagong Division.

Chittagong, the 22nd December 1934.

Award of Middle Scholarships for the year 1934.

Each scholarship is of the value of Rs. 4 per month tenable for four years in a recognised high school or for two years in a Government normal school with effect from the 1st January 1935 :—

No.	Name of scholar.	Name of school from which the candidate appeared.	Name of school where the scholarship is tenable.
	Tippera District.		
	Open scholarships.		
1	Ali Husain	Bijaypur M. V. School	Hajiganj H. E. School.
2	Rakesh Chandra Bhattacharjee	Fundauk M. E. School	Habiganj Government H. E. School
3	Ahmad Khan	Shahatali M. E. School	Baburhat H. E. School.
4	Islam Baksh	Giridakalindia Karimia M. E. School	Lakshmipur H. E. School.
5	Sirajul Haq	Dhamra M. E. School	Comilla Zilla School.
6	Jayhari Das	Fundauk M. E. School	Brahmanbaria Annada H. E. School.

No.	Name of scholar.	Name of school from which the candidate appeared.	Name of school where the scholarship is tenable.
		Reserved scholarships for Moslems.	
1	Raisuddin Ahmad	.. Comilla M. E. School	.. Comilla Zilla School.
2	Abdullah Mia	.. Alinakipur M. E. School	.. Laksam H. E. School.
3	Md. Lal Mia	.. Barail M. E. School	.. Bidyakut Amar H. E. School.
4	Kazi Enayetul Islam	.. Brahmanbaria M. E. School	.. Brahmanbaria Annada H. E. School.
		Reserved scholarship for backward class.	
1	Gopal Chandra Sukladas	.. Khorudia M. E. School	.. Boalia H. E. School.
		Noakhali District.	
		Open scholarships.	
1	Abu Syed Jalal Ahmad	.. Karaiya M. E. School	.. Feni H. E. School.
2	Abdul Mannan	.. Bamni M. E. School	.. Noakhali Zilla School.
3	Bhubaneswar Nath	.. Hajipur M. E. School	.. Ditto.
4	Muazzem Haidar Chaudhury	.. Gopalpur M. E. School	.. Ditto.
		Reserved scholarships for Moslems.	
1	Chand Mia	.. Aliarpur Kazirhat M. E. School	.. Begamganj H. E. School.
2	Nur Muhammad	.. Chaumuhani M. E. School	.. Noakhali Zilla School.
3	Fazlur Rahim	.. Kamalpur M. E. School	.. Chatkhil H. E. School.
		Reserved scholarship for backward class.	
1	Ramesh Chandra Nath	.. Ghatla M. E. School	.. Noakhali Zilla School.
		Chittagong District.	
		Open scholarships.	
1	Kunja Mohan Saha	.. Rangunia Rasik M. E. School	.. Rangunia H. E. School.
2	Anwar Ahmad	.. Muhammadpur M. E. School	.. Raozan H. E. School.
3	Hriday Ranjan Paul	.. Ramu Kheezari M. E. School	.. Amilaish-Kanchana H. E. School.
		Reserved scholarships for Moslems.	
1	A. K. Md. Ahsan	.. Chittagong Government M. E. School	Chittagong Collegiate School.
2	Ali Ahmad	.. Karerhat M. E. School	.. Comilla Zilla School.
3	Fariduzzaman	.. Shikarpur M. E. School	.. Banigram H. E. School.
		Reserved scholarships for backward class.	
1	Prakash Chandra Nath	.. Sarkarhat M. E. School	.. Abutorab H. E. School.
		Chittagong Hill Tracts.	
		Open scholarship.	
1	Indramani Chakma	.. Khagrachari M. E. School	.. Rangamati Government H. E. School.

Special middle scholarships reserved for depressed and backward classes in Chittagong Division sanctioned under the Director of Public Instruction, Bengal's No. 1058, dated the 23rd December 1923.

		Tippera District.	
1	Jitendralal Bhaumik	.. Brahmanbaria M. E. School	.. Brahmanbaria Annada H. E. School.
2	Ashit Ranjan Goldar	.. Gaurangabazar M. E. School	.. Sengarchar H. E. School.
3	Bidhubhusan Kundu	.. Lalpur M. E. School	.. Chandpur Puranbazar H. E. School.
		Noakhali District.	
1	Sricharan Das	.. Bhadur M. E. School	.. Ramganj H. E. School.
2	Jogendra Kumar Das	.. Durgapur M. E. School	.. Muhammadpur H. E. School.
		Chittagong District.	
1	Nagarbashi Nath	.. Kalipur Palgram M. E. School	.. Amilaish-Kanchana H. E. School.

M. A. JAAFAR, *Inspector of Schools.*

Jack Memorial Scholarship.

NOTIFICATION No. 47.

Barisal, the 2nd January 1935.

Subject to the usual condition of good conduct and satisfactory progress, one scholarship of Rs. 20 only a month from the Jack Memorial Scholarship Fund is awarded to the student named below for one year with effect from 1st July 1934:—

Maulvi Syed Muhammed Abdul Halim of Post-Graduate Class in Economics—5th year class of Calcutta University.

The scholarship is tenable at the Calcutta University where the holder of the scholarship is now attending the M.A. class in Economics.

It shall be optional for the committee of management of the Jack Memorial Scholarship Fund to cancel a scholarship at any time on their being satisfied that the holder of the scholarship has not been deriving full benefit thereof.

A. J. DASH,

District Magistrate of Bakarganj and Member of the Managing Committee.

Education Department, Bengal.

NOTIFICATION.

Calcutta, the 4th January 1935.

The following officers of the Indian Civil Service who appeared at the Interpretership Examination in Bengali held by the Board of Examiners at Writers' Buildings in November 1934 are declared to have passed the examination and have been classed as 2nd class Interpreters:—

Mr. M. M. Stuart, I.C.S., District Magistrate, Burdwan.

Mr. N. M. Khan, I.C.S., Subdivisional Officer, Brahmanbaria, Tippera.

J. M. BOTTOMLEY,

Director of Public Instrn., Bengal.

Calcutta University.

NOTIFICATION No. R. 99.

Senate House, the 21st December 1934.

It is hereby notified for general information that under section 25, sub-section (*1*) of the Indian Universities Act, 1904 (VIII of 1904), as amended by the Calcutta University Act, 1921 (VII of 1921), the Government of Bengal (Ministry of Education), have been pleased to sanction the following changes in Chapter XLV-B (Third M.B. Examination) of the University Regulations relating to the syllabus under "Hygiene and Public Health."

The syllabus under "Hygiene and Public Health" in Chapter XLV-B (Third M.B. Examination), pages 374-75, of the Regulations (Edition, 1932) has been replaced by the following:—

(1) Preventive medicine—A concept, not a subject. The three divisions of the science and art of medicine:—curative medicine, preventive medicine and constructive medicine. The part that the general practitioner should play in all three.

(2) A brief history of the development of the public health services in Great Britain and India. An outline of public health services as they exist at present in Great Britain and in India. The responsibilities and duties of the general practitioner in these services.

(3) "Environmental" and "individual" Hygiene, the principles underlying each.

(4) The production and spread of disease; spread by contact; by droplet infection; by environmental vehicles (water and food) and by parasites (*e.g.*, insects).

(5) Environmental Hygiene: water, air, ventilation, excretal disposal, housing, clothing, and food. The main principles and facts regarding these treated in an elementary manner and with special relation to India and Indian conditions.

(6) "Individual" Hygiene: The main factors relating to the production and maintenance of health in the individual throughout life. (Antenatal, natal, infancy, childhood, manhood, middle age and old age periods.) The importance of proper nutrition, work, recreation, sleep, rest and clothing in providing and preserving health of mind and body.

(7) The main diseases of India and the factors operating in their production. Their prevention and the duties of the general practitioner regarding them.

Disinfection and insect destruction.

An elementary knowledge of the life-histories of the mosquito, sandfly, housefly, louse, lick flies and bed bug.

(8) The production of immunity.

The prevention of disease by immunilogical methods.

(9) The meaning of the term Vital Statistics.

The methods of collection in India.

The meaning of the terms—birth rate, death rate, infantile mortality; these rates in Bengal.

(10) An outline of the Sanitary and Public Health service in Bengal, the Ministry of Health, the Director of Public Health and his Staff, District Health Officers, Municipal Health Officers and Sanitary Inspectors.

(11) Instruction should aim at inculcating principles and outlook rather than details, and such instruction should not be confined to the teacher of hygiene, but should be given by every teacher throughout the whole curriculum.

N.B.—The above changes will be given effect to from the beginning of the next session.

J. CHAKRAVORTI, *Registrar.*

A.—Statement of stipends awarded to pupils and to teachers on the results of the Sanskrit First Examination, 1934, held by Notification No. 4236, dated the 29th December 1896, Notification No. 1409, dated the 31st March 1896, and the

(Held on the 3rd and

Approved by the Council of

Fifty-seven stipends to pupils at Rs. 2 a month for two years.

Twenty-one stipends of Rs. 6 a month, twenty-four stipends of Rs. 8 a month, and four Harakumar Tagore

The stipends are tenable

No student will be allowed to hold more than one stipend

	Names of Associations.	Candidates.				Stipends to			
		Number of candidates presented.		Number of candidates passed.		Available for merit at Rs. 2.		Available for the encouragement of the students in backward localities.	
		Kavya and Grammar.	Higher subjects.	Kavya and Grammar.	Higher subjects.	Kavya and Grammar.	Higher subjects.	Kavya and Grammar.	Higher subjects.
1	Calcutta Pandit Sabha	1,893	338	927	151	1	2	..	..
2	Bhatpara Pariksha Sabha	62	22	44	14	..	1	..	..
3	Nabadwip Bibudha Janani Sabha ..	140	34	82	16	..	..	..	..
4	Berhampore Pandit Sabha	60	2	33	2	..	..	..	..
5	Narail Vidyotsahini Sabha	..	..	..	..	..	..	..	..
6	Jessore Sarada Parisad	41	13	23	5	..	..	..	..
7	Daulatpur Saraswat Samiti	218	15	127	7	..	..	..	..
8	Burdwan Bijay Centre	146	32	81	20	..	..	..	1
9	Gangatikuri Indranath Centre	42	13	32	5	..	..	..	..
10	Midnapur Vidyotsahini Sabha	43	8	24	4	..	..	1	..
11	Amarshi Vidyabodhini Sabha	175	19	131	10	..	..	..	..
12	Ghatal Sanskrit Samiti	188	18	92	8	..	..	..	..
13	Baraberia Sanskrit Samiti	103	3	56	1	..	..	..	..
14	Contai Sanskrit Samiti	288	39	154	20	..	..	..	1
15	Tiluri Bani Bikash Sanskrit Samiti ..	73	5	46	4	..	..	..	..
16	Bankura Saraswat Samaj	205	10	141	4	..	..	..	..
17	Suri Sanskrit Parisad	75	9	49	7	..	..	..	1
18	Dacca	104	22	59	8	1	..	..	..
19	Bakla Aryya Sammilani Sabha	143	13	90	6	..	1	..	..
20	Barisal Dharmarakshini Sabha	233	14	140	7	..	..	1	..
21	Goalundo Saraswat Sammelan at Rajbari ..	34	6	20	5	..	..	..	..
22	Idilpur Hitaishini Sabha	51	3	36	1	..	..	..	..
23	Rupapat Vidyotasammilani Sabha ..	27	3	10	..	..	..	..	..
24	Mymensingha Dharma Sabha	89	24	55	9	..	..	..	..
25	Hemnagar Hem Chandra Sanatan Sabha ..	81	12	50	6	..	..	..	..
26	Kishoregunge Aryya Parisad	73	15	42	10	..	..	..	1
27	Tangail Sanskrit Examination Committee ..	59	3	26	1	..	..	..	..
28	Rajshahi Maharani Hemanta Kumari Sanskrit College	26	5	16	1	..	..	..	..
29	Pabna Jnanada Samiti	54	5	32	2	..	..	..	..
30	Naogaon Sanskrit Samiti	80	10	51	3	..	..	..	..
31	Rangpur Dharma Sabha	69	10	38	3	..	..	..	..
32	Chittagong Vidyabinodini Sabha ..	192	30	104	12	..	..	..	..
33	Patiya Jnanadayini Sabha	132	8	72	4	..	..	..	..
34	Noakhali Suhrid Sammilani Sabha ..	75	4	55	2	..	..	..	..
35	Comilla Dharma Sabha	117	9	73	6	..	..	..	..
36	Brahmanberia Vidyotsahini Sabha ..	57	13	35	10	..	..	..	..
37	Darjeeling	12	..	5	..	..	..	..	..
	ASSAM.								
38	Gauripur Tarini Priya Sanskrit Samiti ..	2	1	1	..	..	..	..	..
39	Silchar Prachya Siksha Parisad	10	3	5	..	..	..	..	..
40	Nalbari Sanskrit Sanjiban Sabha ..	44	1	33	..	..	..	..	..
41	Gauhati	3	..	2	..	..	..	..	..
42	Sylhet Government Sanskrit College Centre ..	39	4	22	1	..	..	..	..
43	Shillong Government High School ..	..	..	..	..	..	..	..	..
44	Habigunge Sanskrit Pariksha Samiti ..	24	3	14	3	..	..	..	..
	CENTRAL PROVINCES.								
45	Mandala Sanskrit School Committee ..	10	1	4	..	..	..	..	..
46	Jubbalpur K. Hitakarini Sabha	150	19	96	19	..	..	..	..
47	Raipur Sanskrit Association	71	1	56	..	..	..	..	..
	CENTRAL INDIA.								
48	Datiya State Education Committee ..	..	..	..	..	..	..	..	..
49	Indore Maharaja Holkar Sanskrit Maha-vidyalaya	191	67	110	37	..	..	..	..
50	Shibpuri Vratatwa Prakasak Mandal ..	40	3	23	3	..	..	..	..
51	Nagpur Sanskrit Examination Committee ..	64	10	38	7	..	..	..	..
52	Beawar Sanatan Dharma Prakashini Sabha ..	275	88	139	25	..	..	..	..
53	Gowalior Sanskrit Examination Centre ..	79	20	39	14	..	..	..	..
	BOMBAY PRESIDENCY.								
54	Bombay Gokuldas Tejpal Sanskrit College ..	215	56	140	35	..	..	..	..
55	Petlad Sanskrit Association	186	21	123	9	..	..	..	..
56	Poona Acharyyakul Sanskrit Sabha ..	..	..	..	..	..	..	..	..
57	Jamnagar Sanskrit Examination Centre ..	69	12	46	6	..	..	..	..
	UNITED PROVINCES.								
58	Brindaban Banamali Centre	6	6	6	3	..	..	..	..
	Total	6,932	1,105	3,849	536	2	4	2	4

different Associations under the rules prescribed in Government Resolution No. 857, dated the 21st March 1892, Director of Public Instruction's Rules for the distribution of stipends to pupils and teachers, dated the 18th January 1901.

4th February 1934.)

the Sanskrit Association, Calcutta.

Tol stipends of Rs. 4 a month and one at Rs. 3 a month, are awarded to teachers (tenable for one year).

from September 1934.

for the same subject in the course of the same year.

pupils.			Stipends to teachers.						
Stipends in proportion to passes under different Associations.		Total.	Available for merit at Rs. 8.		Available for the encouragement of Pandits in backward localities at Rs. 6.	By adding up marks.		Harakumar Tagore Tol stipends at Rs. 4. Endowed scholarships reserved for Calcutta Pandit Sabha only.		Total.
Kavya and Grammar.	Higher subjects.		Kavya and Grammar.	Higher subjects.		At Rs. 8.	At Rs. 6.	At Rs. 3.	At Rs. 4.	
15	30	57	4	6	10	14	11	1	4	50

B.— Statement of stipends awarded to pupils and to teachers on the results of the Sanskrit Second Examination, 1934, held by Notification No. 4236, dated the 29th December 1896, Notification No. 1409, dated the 31st March 1896, and the Director

(Held on the 5th and

Seventeen stipends of Rs. 3 a month and fifteen stipends of Rs. 4 a month, tenable for two years, and four Nyaya Fourteen stipends of Rs. 10 a month, fifteen stipends at Rs. 12 a month, four Harakumar Tagore Tol stipends of Rs. 5

These stipends are tenable

No student will be allowed to hold more than one stipend

	Names of Associations.	Candidates.				Stipends			
		Number of candidates presented.		Number of candidates passed.		Available for merit at Rs. 4.		Available for the encouragement of students in backward localities at Rs. 3.	
		Kavya and Grammar.	Higher subjects.	Kavya and Grammar.	Higher subjects.	Kavya and Grammar.	Higher subjects.	Kavya and Grammar, Rs. 3.	Higher subjects, Rs. 3.
1	Calcutta Pandit Sabha	952	172	361	108	..	2	1	..
2	Bhatpara Pariksha Sabha	35	13	25	12	..	..	..	..
3	Nabadwip Bibudha Janani Sabha	60	13	32	8	..	..	..	..
4	Berhampur Pandit Sabha	13	1	6	1	..	..	..	..
5	Narail Vidyotsahini Sabha	..	..	..	..	..	..	..	..
6	Jessore Sarada Parisad	15	3	3	1	..	..	..	..
7	Daulatpur Saraswat Samiti	41	5	20	4	..	..	..	..
8	Burdwan Bijay Centre	47	20	34	14	..	..	..	..
9	Gangatikuri Indranath Centre	22	3	21	2	..	..	..	..
10	Midnapur Vidyotsahini Sabha	23	4	16	4	..	..	..	..
11	Amarshi Vidyabodhini Sabha	42	9	25	8	..	..	..	..
12	Ghatal Sanskrit Samiti	54	4	27	1	..	..	..	..
13	Baraberia Sanskrit Samiti	21	3	12	1	..	..	..	..
14	Contai Sanskrit Samiti	60	9	40	8	..	..	..	..
15	Tiluri Bani Bikash Sanskrit Samiti	28	2	16	2	..	..	..	..
16	Bankura Saraswat Samaj	35	4	21	4	..	..	..	1
17	Suri Sanskrit Parisad	16	4	10	2	..	..	..	..
18	Dacca	27	5	14	3	..	..	..	..
19	Bakla Aryya Sammilani Sabha	35	2	26	2	1	..	..	..
20	Barisal Dharmarakshini Sabha	38	2	22	1	..	..	..	..
21	Goalundo Saraswat Sammelan at Rajbari	14	3	5	3	..	..	..	..
22	Idilpur Hitakshini Sabha	8	2	5	2	..	..	..	..
23	Rupapat Dhuljora Vidyotsammilani Sabha	6	..	2	..	..	..	..	..
24	Mymensingh Dharma Sabha	30	6	18	4	..	..	..	..
25	Hemnagar Hem Chandra Sanatan Sabha	10	2	8	1	..	..	..	..
26	Kishoregunge Aryya Parisad	26	11	11	8	..	..	..	..
27	Tangail Sanskrit Examination Committee	11	..	11	..	..	..	..	..
28	Rajshahi Maharani Hemanta Kumari Sanskrit College	18	5	12	4	..	..	..	..
29	Pabna Jnanada Samiti	11	2	10	..	..	..	..	..
30	Naogaon Sanskrit Samiti	21	1	15	..	..	..	..	..
31	Rangpur Dharma Sabha	31	2	18	1	..	..	..	..
32	Chittagong Vidyabinodini Sabha	47	11	22	8	..	..	..	..
33	Patiya Jnanadayini Sabha	26	2	16	1	..	..	..	..
34	Noakhali Suhrid Sammilani Sabha	27	4	21	3	..	..	..	..
35	Comilla Dharma Samiti	25	..	17	..	..	..	..	..
36	Brahmanberia Vidyotsahini Sabha	18	1	12	1	..	..	..	..
37	Darjeeling	..	..	..	..	..	..	..	..
	ASSAM.								
38	Gauripur Tarini Priya Sanskrit Samiti	10	2	8	1	..	..	..	..
39	Silchar Prachya Sikaha Parisad	5	1	3	..	..	..	..	..
40	Nalbari Sanskrit Samjivan Sabha	11	2	6	1	..	..	..	..
41	Gauhati	3	2	2	2	..	..	..	..
42	Sylhet Government Sanskrit College Centre	4	2	3	2	..	..	..	..
43	Shillong Government High School	..	..	..	..	..	..	..	..
44	Habigunge Sanskrit Pariksha Samiti	5	3	3	2	..	..	..	1
	CENTRAL PROVINCES.								
45	Mandala Sanskrit School Committee	1	1	..	..	..	..	..	..
46	Jubbalpur K. Hitakarini Sabha	18	7	12	7	..	..	..	..
47	Raipur Sanskrit Association	2	..	2	..	..	..	..	..
	CENTRAL INDIA.								
48	Datiya State Education Committee	..	..	..	..	..	..	..	..
49	Indore Maharaja Holkar Sanskrit Mahavidyalaya	48	28	32	21	..	..	..	..
50	Shivpuri Virattwa Prakasak Mandal	1	..	..	..	..	..	..	..
51	Nagpur Sanskrit Examination Committee	18	1	13	1	..	..	..	..
52	Bewar Sanatan Dharma Prakashini Sabha	35	19	23	13	..	..	..	..
53	Gowalior Sanskrit Examination Centre	29	12	24	9	..	..	..	..
	BOMBAY PRESIDENCY.								
54	Bombay Gokuldas Tejpal Sanskrit College	61	24	51	19	..	..	..	..
55	Petlad Sanskrit Association	62	8	49	5	..	..	..	..
56	Poona Acharyyakul Sanskrit Sabha	..	..	..	..	..	..	..	..
57	Jamnagar Sanskrit Examination Centre	16	5	13	3	..	..	..	..
	UNITED PROVINCES.								
58	Brindaban Banamali Centre	5	2	2	..	..	..	..	..
	Total	2,127	449	1,160	303	1	2	1	2

different Associations under the rules prescribed in Government Resolution No. 857, dated the 21st March 1892, of Public Instruction's Rules for the distribution of stipends to pupils and teachers, dated the 18th January 1901.

6th February 1934.)

stipends at Rs. 3 a month, tenable for three years, are awarded to pupils.
a month, and two Harakumar Tagore Tol stipends of Rs. 6 a month (tenable for one year) are awarded to teachers.

from September 1934.

for the same subject in the course of the same year.

to pupils.						Stipends to teachers.							Harakumar Tagore Tol stipends. Endowed scholarships reserved to Calcutta Pandit Sabha only.		Total.
Stipends in proportion to passes under different Associations.				Reserved for Nyaya, Rs. 3 for three years.	Total.	Available for merit at Rs. 12.		Available for the encouragement of pandits in the backward localities, Rs. 10.	By adding up marks.		Reserved for Nyaya.				
Kavya and Grammar, Rs. 3.	Higher subjects, Rs. 3.	Kavya and Grammar, Rs. 4.	Higher subjects, Rs. 4.			Kavya and Grammar.	Higher subjects.		At Rs. 10.	At Rs. 12.	At Rs. 10.	At Rs. 12.	At Rs. 5.	At Rs. 6.	
3	8	1	7	..	..	..	4	..	4	4	..	..	4	2	..
..	..	..	1	..	..	..	..	..	..	..	..	..	..	..	..
..	..	..	..	..	..	..	..	..	2	..	..	..	..	..	..
..	..	..	..	..	..	..	..	..	..	..	..	..	..	..	..
..	..	..	..	..	..	..	..	..	..	..	..	..	..	..	..
..	..	..	..	..	..	..	..	..	..	..	..	..	..	..	..
..	..	..	..	..	..	..	..	..	..	..	..	..	..	..	..
..	..	..	..	2	..	..	..	..	..	..	..	..	..	..	..
..	..	1	..	..	..	..	..	..	..	..	..	..	..	..	..
..	..	..	..	..	..	..	..	..	..	..	..	..	..	..	..
..	..		..	..	..	..	..	..	..	1	..	..	..	..	..
..	..	1	..	..	..	..	..	1	..	..	..	..	..	..	..
..	..	..	..	..	..	..	..	..	..	..	..	..	..	..	..
..	1	1	..	..	..	1	..	2	..	..	..	..	..	..	..
..	..	..	..	..	..	..	..	..	..	..	..	..	..	..	..
..	..	..	..	..	..	..	..	..	..	..	..	..	..	..	..
..	..	..	..	..	..	..	..	..	..	..	..	..	..	..	..
..	..	..	..	..	..	..	..	..	..	..	..	..	..	..	..
1	..	..	..	..	..	1	..	..	1	1	..	..	..	..	..
..	..	..	..	..	..	..	..	2	..	..	..	..	..	..	..
..	..	..	..	..	..	..	..	..	..	..	..	..	..	..	..
..	..	..	..	..	..	..	..	..	..	..	..	..	..	..	..
..	..	..	..	..	..	..	..	..	..	..	..	..	..	..	..
..	..	..	..	..	..	..	..	..	..	..	..	..	..	..	..
1	..	..	..	..	..	..	..	..	..	1	..	..	..	..	..
..	..	..	..	1	..	..	..	..	..	..	..	1	..	..	..
..	..	..	..	..	..	..	..	..	..	..	..	..	..	..	..
..	..	..	..	1	..	..	..	..	..	..	1	..	..	..	..
..	..	..	..	..	..	..	..	..	..	..	..	..	..	..	..
..	..	..	..	..	..	..	..	..	..	..	..	..	..	..	..
..	..	..	..	..	..	..	..	..	..	..	..	..	..	..	..
..	..	..	..	..	..	..	..	..	..	..	..	..	..	..	..
..	..	..	..	..	..	..	..	..	..	1	..	..	..	..	..
..	..	..	..	..	..	..	..	..	..	..	..	..	..	..	..
..	..	..	..	..	..	..	..	1	..	..	..	..	..	..	..
..	..	..	..	..	..	..	..	..	..	..	..	..	..	..	..
..	..	..	..	..	..	..	..	..	..	..	..	..	..	..	..
..	..	..	..	..	..	..	..	..	..	..	..	..	..	..	..
..	..	..	..	..	..	..	..	..	..	..	..	..	..	..	..
..	..	..	..	..	..	..	..	..	..	..	..	..	..	..	..
..	..	..	..	..	..	..	..	..	..	..	..	..	..	..	..
..	..	..	..	..	..	..	..	..	..	..	..	..	..	..	..
..	..	..	..	..	..	..	..	..	..	..	..	..	..	..	..
..	..	..	..	..	..	..	..	..	..	..	..	..	..	..	..
..	..	..	..	..	..	..	..	..	..	..	..	..	..	..	..
..	..	..	..	..	..	..	..	..	..	..	..	..	..	..	..
..	..	..	..	..	..	..	..	..	..	..	..	..	..	..	..
..	..	..	..	..	..	..	..	..	..	..	..	..	..	..	..
..	..	..	..	..	..	..	..	..	..	..	..	..	..	..	..
..	..	..	..	..	..	..	..	..	..	..	..	..	..	..	..
..	..	..	..	..	..	..	..	..	..	..	..	..	..	..	..
..	..	..	..	..	..	..	..	..	..	..	..	..	..	..	..
..	..	..	..	..	..	..	..	..	..	..	..	..	..	..	..
..	..	..	..	..	..	..	..	..	..	..	..	..	..	..	..
..	..	..	..	..	..	..	..	..	..	..	..	..	..	..	..
..	..	..	..	..	..	..	..	..	..	..	..	..	..	..	..
..	..	..	..	..	..	..	..	..	..	..	..	..	..	..	..
..	..	..	..	..	..	..	..	..	..	..	..	..	..	..	..
..	..	..	..	..	..	..	..	..	..	..	..	..	..	..	..
..	..	..	..	..	..	..	..	..	..	..	..	..	..	..	..
..	..	..	..	..	..	..	..	..	..	..	..	..	..	..	..
5	9	4	8	4	30	2	4	6	7	8	1	1	4	2	35

C.—Stipends awarded to pupils on the results of the Sanskrit First Examination, 1934, held by different Associations under the rules prescribed in Government Resolution No. 857, dated the 21st March 1892, Notification No. 4236, dated the 29th December 1896, Notification No. 1409, dated the 31st March 1896, and the Director of Public Instruction's rules for the distribution of stipends to pupils and teachers, dated the 18th January 1901.

(To be paid by the District Inspector of Schools.)

FOR MERIT.

Name of stipend-winner.	Monthly amount of stipend.	Name and address of teacher.	Place where the stipend-holder continues his studies.	Subject.
		Stipends tenable for two years from September 1934.		
		DACCA.		
	Rs.			
Birendranarayan Misra ..	2	Pandit Kalicharan Smritititirtha, Tanbazar, Narayangunge, Dacca.	With the same teacher..	Kavya.
		CALCUTTA.		
Bhubaneswar Sarangi ..	2	Pandit Brajanarayan Sastri, 16, Kasidatta Street, Calcutta.	With the same teacher..	S. Chandrika.
		BHATPARA.		
Achintapada Bhattacharyya	2	Pandit Narayan Chandra Smritititirtha, Sanskrit College, Calcutta.	With the same teacher..	Smriti (শ্র).
		CALCUTTA.		
Kalipada Bhattacharyya ..	2	Pandit Bhuban Mohan Kavya Vyakarantirtha, 2-1-1A, Bagbazar Street, Calcutta.	With the same teacher..	Puran.
Nagendra Nath Chakravarti	2	Pandit Purandas Saptatirtha, Corporation Tol, 15, Mohanbagan Lane, Calcutta.	Ditto ..	Ditto.
		BAKLA.		
Sambhunath Vyakarantirtha.	2	Pandit Krishnadas Tarkatirtha, Kabindra College, Gaila, Barisal.	With the same teacher..	Nyaya (শ্র).
		Stipends in proportion to passes.		
		CALCUTTA.		
Paramananda Tripathi ..	2	Pandit Kanaiya Prasad Sastri, H. S. Maha Vidyalaya, Barabazar, Calcutta, 29-1, Bastala Street.	With the same teacher..	Laghu Kaumudi.
Krishna Chandra Bhattacharyya.	2	Pandit Gobinda Chandra Kavyatirtha, Baranagar, Alambazar, 24-Parganas.	Ditto ..	Harinamammrita.
Akkari Charan Acharyya ..	2	Pandit Digindra Nath Kavya Vyakaran Jyotishtirtha, 97-3, Syambazar Street, Calcutta.	Ditto ..	Jyotish.
Jadabeswar Bhattacharyya	2	Pandit Ram Chandra Smritititirtha, 14, Nimtala Lane, Calcutta.	Ditto ..	Puran.
Lakshminarayan Sambhag..	2	Mahamahopadhyaya Jogendranath Sankhya Vedantatirtha, Sanskrit College, Calcutta.	Ditto ..	Sankhya.
Birendra Kumar Bhattacharyya.	2	Pandit Manmatha Nath Panchatirtha, Sanskrit College, Bhatpara, 24-Parganas.	Ditto ..	Puran.
Chandra Sekhar Dwibedi ..	2	Pandit Kalipada Shastri, Pasupati Basu Chatuspathi, 5, Biswakosh Lane, Bagbazar, Calcutta.	Ditto ..	Vedanta.
Nikunja Bihari Bhattacharyya.	2	Pandit Manmatha Nath Panchatirtha, Sanskrit College, Bhatpara, 24-Parganas.	Ditto ..	Upanisad.
Saraj K. Bhattacharyya ..	2	Pandit Akshaykumar Smritibhusan, Boali, Chaudhuryboali, Dacca.	Ditto ..	Ditto.
Kali Kumar Datta ..	2	Pandit Manmatha Nath Panchatirtha and Pandit Nikunja Behari Tarkatirtha, 1, Madan Mitra Lane, Calcutta.	Ditto ..	Ditto.
Sadananda Chaudhury ..	2	Pandit Biswanath Thakur, Visudhyananda Vidyalaya, Calcutta.	Ditto ..	Puran.
Abaninath Banerjee ..	2	Pandit Rajkumar Vidatirtha, Kaikala, Hooghli.	Ditto ..	Ditto.

Name of stipend-winner.	Monthly amount of stipend.	Name and address of teacher.	Place where the stipend-holder continues his studies.	Subject.
	Rs.	**BHATPARA.**		
Rajeswar Bhattacharyya ..	2	Pandit Manmatha Nath Panchatirtha, Sanskrit College, Bhatpara, 24-Parganas.	With the same teachor..	Nyaya.
Manmatha Nath Bhattacharyya.	2	Ditto ..	Ditto ..	Ditto.
Baidyanath Bhattacharyya	2	Pandit Basudeb Kavyatirtha, Baidyapur, Burdwan.	Ditto ..	Puran.
		NABADWIP.		
Krishna Chandra Bhattacharyya.	2	Pandit Amrityuhari Smrititirtha, Belpukur, Nadia.	With the same teacher	Mugdhabodha.
Herambanath Bhattacharyya.	2	Mahamahopadhyaya Chandidas Nyaya Tarkatirtha, Nabadwip, Nadia.	Ditto ..	Nyaya (শ).
		BERHAMPORE.		
Gour Chandra Bhattacharyya.	2	Pandit Isan Chandra Smritipanchanan, Jubilee Tol, Berhampore, Khagra, Murshidabad.	With the same teacher	Smriti (শ).
		BURDWAN.		
Baidyanath Bhattacharyya	2	Mahamahopadhyaya Bireswar Tarkatirtha, Bijay Chatuspathi, Burdwan.	With the same teacher	Mugdhabodha.
Ramendranath Bhattacharyya.	2	Pandit Harendra Nath Vedantatirtha, Bijay Chatuspathi, Burdwan.	Ditto ..	Sankhya.
Sachhidananda Mukhopadhyaya.	2	Pandit Umapada Kavyatirtha, Rajpurnandi, Nandi, Burdwan.	Ditto ..	Vedanta.
Kshudiram Kavyatirtha ..	2	Mahamahopadhyaya Bireswar Tarkatirtha, Bijay Chatuspathi, Burdwan.	Ditto ..	Sankhya.
Kalipada Chattopadhyaya	2	Pandit Dwarkesh Tarkabhusan, Searsole, Burdwan.	Ditto ..	Vedanta.
		AMARSHI.		
Sridhar Chandra Misra ..	2	Pandit Surapati Nath Kavyatirtha, Amarshi, Midnapore.	With the same teacher	Sankshiptasar.
Satis Chandra Panda ..	2	Pandit Pitambar Kavya Vyakaran Sankhyatirtha, Daudpur, Nandigram, Midnapore.	Ditto ..	Sadharan Darsan.
Benimadhab Tripathi ..	2	Ditto ..	Ditto ..	Puran.
		GHATAL.		
Haripada Bhattacharyya ..	2	Pandit Narayan Vidyaratna, Jogikhop, Kakgechia, Midnapore.	With the same teacher	Sankshiptasar.
Dakshina Charan Kar Sarma	2	Pandit Asutosh Kavya Vyakarantirtha, Udang, Howrah.	Ditto ..	Mugdhabodha.
Murarimohan Das ..	2	Pandit Bankim Bihari Kavyatirtha, Putputia, Maynagarh, Midnapore.	Ditto ..	Ditto.
Chunilal Purohit ..	2	Pandit Karunamay Kavya Smrititirtha, Tarakeswar, Hooghly.	Ditto ..	Smriti (শ).
		BANKURA.		
Dharanidhar Bhattacharyya	2	Pandit Asutosh Vidyaratna, Harinarayan Tol, Bankura.	With the same teacher	Puran.
		DACCA.		
Bankim Chandra Bandyopadhyaya.	2	Pandit Balaram Smriti Vyakarantirtha, Armanitola, Dacca.	With the same teacher	Kalap.
Sasanka Sekhar Bhattacharyya.	2	Pandit Jiban Krishna Tarkatirtha, Armanitola, Dacca.	Ditto ..	Upanisad.
		BAKLA.		
Phani Bhusan Chakravarti	2	Pandit Jatindra Nath Das Gupta, Kabindra College, Gaila, Bakla, Barisal.	With the same teacher	Kalap.
Sakti Kumar Gupta ..	2	Ditto ..	Ditto ..	Ditto.
Pramathanath Bhattacharyya.	2	Pandit Krishnadas Tarkatirtha, Kabindra College, Gaila, Barisal.	Ditto ..	Nyaya (শ).

Name of stipend-winner.	Monthly amount of stipend.	Name and address of teacher.	Place where the stipend-holder continues his studies.	Subject.
		BARISAL.		
	Rs.			
Taranath Bhattacharyya	2	Pandit Ramlal Smritirtha, Banagram, Khulna.	With the same teacher	Sankhya.
		RAJBARI.		
Prakritiranjan Bhaumik ..	2	Pandit Jogendranath Smriti Sankhyatirtha, Goalpara, Sripur, Jessore.	With the same teacher	Laghu Kaumudi.
Shanti Chaitanya Brahmachari.	2	Pandit Upendra Chandra Tarkatirtha, Dhanakati, Faridpur.	Ditto ..	Ditto.
		CHITTAGONG.		
Dhirendralal De ..	2	Pandit Srimati Jogeswari Saraswati, Tamakumandi, Chittagong.	With the same teacher	Kalap.
		KISHOREGUNGE.		
Hem Chandra Chakravarti	2	Pandit Harendra Chandra Smritirtha, Gauripur, Mymensingh.	With the same teacher	Sankhya.
		PABNA.		
Bhawani Charan Mukherjee	2	Pandit Durga Prasanna Vidyabhusan, Saraswat Tol, Pabna.	With the same teacher	Upanisad.
		NOAGAON.		
Nagendra Kumar Tarafdar	2	Pandit Surendra Nath Smritiratna, Chatmohar, Pabna.	With the same teacher	Mugdhabodha.
Asutosh Bhattacharyya ..	2	Pandit Harimohan Smrititirtha, Raikali, Bogra.	Ditto ..	Smriti.
		PATIYA.		
Narahari Bhattacharyya ..	2	Pandit Surendra Lal Smritirtha, Alampur, Dhalghat, Chittagong.	With the same teacher	Puran.

Stipends for the encouragement of students in backward localities.

		MIDNAPORE.		
Bhavataran Bhattacharyya.	2	Pandit Rameswar Smriti Kavyatirtha, Karkai, Pingla, Midnapore.	With the same teacher	Saraswat.
		BARISAL.		
Harekrishna Nath ..	2	Sasikumar Tarkatirtha, Gabkhan, Barisal.	With the same teacher	Kalap.
		BURDWAN.		
Satya Pada Mukhopadhyaya	2	Pandit Umapada Kavyatirtha, Rajpurnandi, Burdwan.	With the same teacher	Mimansa.
		CONTAI.		
Ramchandra Bhattacharyya	2	Pandit Dibakar Vedantapanchanan, Contai, Midnapore.	With the same teacher	Vedanta.
		SURI.		
Sarajaksha Chakravarti ..	2	Pandit Batuk Bhairab Smritirtha, Gumta, Kundala, Birbhum.	With the same teacher.	Puran.
		KISHOREGUNGE.		
Kamakhya Charan Bhattacharyya.	2	Pandit Harendra Chandra Smritirtha, Gauripur, Mymensingh.	With the same teacher	Smriti.

Hiralal Mukerjee Silver Medal reserved for Hiralal Chatuspathi.

(To be paid by the Secretary, Bengal Sanskrit Association.)

Awarded to Birendra Nath Ghosal.

D.—Stipends awarded to pupils on the results of the Sanskrit Second Examination, 1934, held by different Associations under the rules prescribed in Government Resolution No. 857, dated the 21st March 1892, Notification No. 4236, dated the 29th December 1896, Notification No. 1409, dated the 31st March 1896, and the Director of Public Instruction's rules for the distribution of stipends to pupils and teachers, dated the 18th March 1906.

(To be paid by the District Inspector of Schools.)

FOR MERIT.

Name of stipend-winner.	Monthly amount of stipend.	Name and address of teacher.	Place where the stipend-holder continues his studies.	Subject.
		Stipends tenable for two years from September 1934.		
		BAKLA.		
	Rs.			
Pramatha Nath Bhattacharyya.	4	Pandit Krishnadas Tarkatirtha, Kabindra College, Gaila, Barisal.	With the same teacher	Mugdhabodha.
		CALCUTTA.		
Panchanan Bhattacharyya	4	Mahamahopadhyaya Jogendra Nath Tarka Vedantatirtha, Sanskrit College, Calcutta	With the same teacher	Vedanta.
Bhagwan Panday ..	4	Pandit Chandrikadatta Misra, 5, Sukh Lal Jahuri Lane, Banstala, Calcutta.	Ditto ..	Sankhya.
		Stipends in proportion to passes.		
		CALCUTTA.		
Bhabataran Kavyatirtha ..	4	Pandit Gobinda Chandra Kavyatirtha, Baranagar, Alambazar, 24-Parganas.	With the same teacher	Harinamamrita.
Seshraj Sarma ..	3	Pandit Sitasaran Dwivedi, 7, Haspukuria Lane, Banstala, Calcutta.	Ditto ..	Kavya.
Indu Bhusan Paladhi ..	3	Pandit Bimala Charan Kavya Vyakarantirtha, Pandua, Harishpur, Howrah.	Ditto ..	Mugdhabodha.
Brahmadeb Misra ..	3	Pandit Balkhandi Vyakarantirtha, 6, Mandir Street, Calcutta.	Ditto ..	Siddhanta Kaumudi.
Anadimohan Goswami ..	4	Pandit Satyananda Goswami, 161, Harrison Road, Calcutta.	Ditto ..	Puran.
Sujibranjan Ray ..	4	Pandit Kalipada Shastri, Pasupati Basu Chatuspathi, 5, Biswakosh Lane, Bagbazar, Calcutta.	Ditto ..	Ditto.
Srimohan Bhattacharyya ..	4	Mahamahopadhyaya Chandidas Nyaya Tarkatirtha, Nabadwip, Nadia.	Ditto ..	Vedanta (Ka).
Kamdob Uthasani ..	4	Pandit Herambanath Panchatirtha, Kalna, Burdwan.	Ditto ..	Puran.
Kamakhyanath Bhattacharyya.	4	Mahamahopadhyaya Jogendra Nath Tarka Vedantatirtha, Sanskrit College, Calcutta.	Ditto ..	Vedanta.
Gopal Chandra Bhattacharyya.	4	Pandit Ramchhabila Sastri, Ramkrishna Veda Vidyalaya, Bhowanipur, Calcutta.	Ditto ..	Sankhya.
Narasinharam Upadhyaya	4	Pandit Raghunath Sarma, Satyanarayan Madhab Misra Pathsala, Salkia, Howrah.	Ditto ..	Puran.
Jagannath Sarangi ..	3	Pandit Brajanarayan Sastri, 16. Kasidatta Street, Calcutta.	Ditto ..	Ditto.
Puranjan Tripathi Kavyatirtha.	3	Pandit Bhudeb Mukherjee, M.A., 41, Grey Street, Calcutta.	Ditto ..	Vedanta (Ka).
Sachhidananda Gupta ..	3	Pandit Rakhaldas Kavyatirtha, 118, Maniktala Street, Calcutta.	Ditto ..	Sankhya.
Manoranjan Ray ..	3	Pandit Kalipada Shastri, Pasupati Basu Chatuspathi, 5, Biswakosh Lane, Bagbazar, Calcutta.	Ditto ..	Puran.
Birendra Kumar Vedalankar	3	Jogendra Nath Sankhya, 4-1, Kumartuli Street, Calcutta.	Ditto ..	Vedanta (Ka).
Ambica Charan Bhattacharyya.	3	Pandit Manmatha Nath Panchatirtha, Bhubaneswari Chatuspathi, Bhatpara, 24-Parganas.	Ditto ..	Vedanta.
Harigobinda Vidyaratna ..	3	Pandit Ratikanta Sankhyatirtha, Sibpur Chatuspathi, Sibpur, Howrah.	Ditto ..	Mimansa.
Rohini Kumar Chaudhury	3	Pandit Sitanath Siddhantabagisa, Sanskrit Sahitya Parisad, Calcutta.	Ditto ..	Puran.

Name of stipend-winner.	Monthly amount of stipend.	Name and address of teacher.	Place where the stipend-holder continues his studies.	Subject.
		BHATPARA.		
	Rs.			
Gobardhan Bhattacharyya	4	Pandit Narayan Chandra Smritititirtha, Sanskrit College, Calcutta.	With the same teacher	Mimansa.
		GANGATIKURI.		
Banish Chandra Mukhopadhyaya.	4	Pandit Kali Kinkar Saptatirtha, Gangatikuri, Burdwan.	With the same teacher	Mugdhabodha.
		GHATAL.		
Bhupendra Nath Bhattacharyya.	4	Pandit Narayan Vidyaratna, Jogikhop, Kakhgachia, Midnapore.	With the same teacher	Sankshiptasar.
		CONTAI.		
Dinanath Tripathi ..	4	Pandit Krishna Prasad Sankhyatirtha, Bhupatinagar, Khalisabhanga, Midnapore.	With the same teacher	Sankshiptasar.
Shiba Prasad Panda ..	3	Pandit Dibakar Vedantapanchanan, Contai, Midnapore.	Ditto ..	Puran.
		BAKLA.		
Sudhangsubhusan Ray ..	3	Pandit Upendrakumar Das Gupta Kavya Vyakarantirtha, Mathbaria, Barisal.	With the same teacher	Kalap.
		HEMNAGAR.		
Bhupendranarayan Ray ..	3	Pandit Satinath Vidyabhusan, Hemnagar, Mymensingh.	With the same teacher	Mugdhabodha.
Stipends for the encouragement of students in backward localities.				
		CALCUTTA.		
Panchanan Bhattacharyya	3	Pandit Amarendra Nath Vedantaratna, Joynagar, Mazilpur, 24-Parganas.	With the same teacher	Mugdhabodha.
		BANKURA.		
Dharanidhar Bhattacharyya	3	Pandit Asutosh Vidyaratna, Harinarayan Tol, Bankura.	With the same teacher	Jyotish.
		HABIGUNGE.		
Chakradhar Chakravarty Kavya Vyakarantirtha.	3	Pandit Nabadwip Chandra Sarma Bhaktibinode, Asma, Barhatta, Mymensingh.	With the same teacher	Sankhya.
Stipends for three years reserve for Nyaya.				
		KISHOREGUNGE.		
Birendra Chandra Bhattacharyya.	3	Pandit Kali Krishna Tarkatirtha, Gaurpipur, Mymensingh.	With the same teacher	Nyaya (৭).
		RAJSHAHI.		
Girish Chandra Deb Sarma	3	Pandit Ramesh Chandra Tarkatirtha, Maharani Hemanta Kumari Sanskrit College, Rajshahi.	With the same teacher	Nyaya (৭).
		BURDWAN.		
Baidyanath Bhattacharyya	3	Mahamahopadhyaya Bireswar Tarkatirtha, Bijay Chatuspathi, Burdwan.	With the same teacher	Nyaya (৭).
Debnarayan Goswami ..	3	Ditto ..	Ditto ..	Ditto.

E.—Stipends awarded to teachers on the results of the Sanskrit First Examination, 1934, held by different Associations under the rules prescribed in Government Resolution No. 857, dated the 21st March 1893, Notification No. 4236, dated the 29th December 1896, Notification No. 1409, dated the 31st March 1896, and the Director of Public Instruction's rules for the distribution of stipends to pupils and teachers, dated the 18th January 1901.

(To be paid by the District Inspector of Schools.)

FOR MERIT.

Name and address of teacher.	Monthly amount of stipend.	Centre of examination.	Subject.
Stipends tenable for one year from September 1934.			
	Rs.		
Pandit Kalicharan Smrititirtha, Tanbazar, Narayangunge, Dacca ..	8	Dacca ..	Kavya.
„ Gobinda Chandra Kavyatirtha, Baranagore, Alambazar, 24-Parganas	8	Calcutta ..	Harinamamrita.
„ Narayan Vidyaratna, Jogikhop, Kakgechia, Midnapore ..	8	Ghatal ..	Sankshiptasar.
„ Amrityuhari Smrititirtha, Belpukur, Nadia ..	8	Nabadwip ..	Mugdhabodha.
„ Bhuban Mohan Kavya Vyakaran Sankhyatirtha, 2-1-1A, Bagbazar Street, Calcutta.	8	Calcutta ..	Puran.
„ Harendra Nath Vedantatirtha, Bijay Chatuspathi, Burdwan.	8	Burdwan ..	Sankhya.
„ Ram Chandra Smrititirtha, 14, Nimtala Lane, Calcutta ..	8	Calcutta ..	Puran.
„ Manmatha Nath Tarkatirtha, Sanskrit College, Bhatpara, 24-Parganas.	8	Ditto ..	Nyaya.
„ Harendra Chandra Smrititirtha, Gauripur, Mymensingh ..	8	Kishoreganj ..	Sankhya.
„ Asutosh Vidyaratna, Harinarayan Tol, Bankura ..	8	Bankura ..	Puran.
By adding up marks.			
Pandit Ashutosh Smritipanchanan, Sanskrit College, Chittagong ..	8	Chittagong ..	....
„ Sarada Prasad Misra, 5, Sukh Lal Jahuri Lane, Banstala, Calcutta.	8	Calcutta ..	....
„ Surendra Chandra Smrititirtha, Babupur, Noakhali ..	8	Noakhali ..	....
„ Suryyamani Tripathi, 2, Hari Sarkar Street, Calcutta ..	8	Calcutta ..	....
„ Kali Charan Vyakarantirtha, 27-B, Balaram Ghosh Street, Calcutta.	8	Ditto ..	....
„ Balkhandi Vyakarantirtha, S. N. Vidyalaya 6, Mandir Street, Calcutta.	8	Ditto ..	....
„ Sibnandan Panday, Visudhyananda Vidyalaya, 134, Mechuabazar Street, Calcutta.	8	Ditto ..	....
„ Suresh Misra, 5, Sukh Lal Jahuri Lane, Banstala, Calcutta ..	8	Ditto ..	....
„ Sudama Sastri, S. N. Vidyalaya, 6, Mandir Street, Calcutta	8	Ditto ..	....
„ Nishi Kanta Kavyatirtha, Medda, Brahmanbaria, Tippera ..	8	Brahmanberia. ..	....
„ Bidyadhar Tripathi, 10, Shyama Bye Lane, Calcutta ..	8	Calcutta ..	....
„ Bishu Prasad Bhandari, Sanga Veda Vidyalaya, Siba Kumar Bhaban, 93-2, Baitakkhana Road, Calcutta ..	8	Ditto ..	....
„ Iswar Chandra Smrititirtha, Malatinagar, Bogra ..	8	Naogaon ..	....
„ Rameswar Smriti Kavyatirtha, Karkai, Pingla, Midnapore	8	Midnapore ..	....
„ Sitasaran Dwivedi, 7, Hanspukhuria Lane, Barabazar, Calcutta.	6	Calcutta ..	....
„ Raghubir Tribedi, Visudhyananda Vidyalaya, 134, Mechuabazar Street, Calcutta.	6	Ditto ..	....
„ Jasodakumar Smrititirtha, Sanskrit College, Noakhali ..	6	Noakhali ..	....
„ Bhudeb Chandra Kavya Sankhyatirtha, Gaila, Barisal ..	6	Bakla ..	....
Mahamahopadhyaya Bireswar Tarkatirtha, Bijay Chatuspathi, Burdwan.	6	Burdwan ..	....
Pandit Ratikanta Sankhyatirtha, Sibpur Chatuspathi, Sibpur, Howrah.	6	Calcutta ..	....
„ Kalikinkar Saptatirtha, Gangatikuri, Burdwan ..	6	Gangatikuri ..	....
„ Durga Prasanna Vidyabhusan, Pabna ..	6	Pabna ..	....
„ Ramanikanta Sidhantaratna, Maharani Hemanta Kumari Sanskrit College, Rajshahi.	6	Rajshahi ..	....
„ Ashutosh Siddhanta Kavya Vyakarantirtha, Sreebash Angon tol, Nabadwip, Nadia.	6	Nabadwip ..	....
„ Muralydhar Misra, 5, Sukh Lal Jahuri Lane, Banstala, Calcutta.	6	Calcutta ..	....

Name and address of teacher.	Monthly amount of stipend.	Centre of examination.	Subject.
Stipends for the encouragement of teachers in backward localities.			
	Rs.		
Pandit Surendra Kumar Tarkatirtha, Debpahar, Chittagong ..	6	Chittagong ..	....
,, Sitanath Kavya Smritititirtha, Kharipukhuria, Nachinda, Midnapore.	6	Contai ..	....
,, Lakshmikanta Tarkatirtha, Barada, Panchrole, Midnapore ..	6	Ditto ..	....
,, Niranjan Tarkabagisa, Bhatikhain, Chittagong ..	6	Chittagong ..	....
,, Lambodar Misra, Egra, Chandaneswar, Midnapore ..	6	Contai ..	....
,, Ambika Charan Nyaya Kavyatirtha, Nandigram, Midnapore	6	Amrashi ..	....
,, Haran Chandra Smritirtha, Tiluri, Bankura ..	6	Tiluri ..	....
,, Rajani Nath Smritirtha, Jalabari, Barisal ..	6	Barisal ..	....
,, Pitambar Kavya Vyakaran Sankhyatirtha, Durgapur, Nandigram, Midnapore.	6	Amarshi ..	....
,, Narayan Chandra Vidyaratna, Barapaika, Uzirpur, Barisal	6	Bakla ..	....

Hiralal Mookerjee Reward reserved for the Pandit of the Hiralal Chatuspathi.

(To be paid by the Secretary, Bengal Sanskrit Association.)

Awarded to Pandit Panchananda Kavya Smritititirtha Rs. 24.

Harakumar Tagore Tol stipends reserved for Calcutta Pandit Sabha.

(To be paid by the Principal, Sanskrit College, Calcutta.)

Pandit Raghubaracharyya Sastri, Upper Circular Road, Calcutta ..	4	Calcutta ..	....
,, Nagendranath Kavya Vyakaran Purantirtha, Bhagabat Chatuspathi, Simla, Calcutta.	4	Ditto ..	....
,, Ram Chandra Sastri, 8, Sitanath Road, Calcutta ..	4	Ditto ..	....
,, Debdatta Misra, 1-1, Mechuabazar Street, Calcutta ..	4	Ditto ..	....
,, Taranath Nyayatarkatirtha, 2, Mahendra Bose Lane, Syambazar, Calcutta.	3	Ditto ..	....

F.—Stipends awarded to teachers on the results of the Sanskrit Second Examination, 1934, held by different Associations under the rules prescribed in Government Resolution No. 857, dated the 21st March 1892, Notification No. 4236, dated the 29th December 1896, Notification No. 1409, dated the 31st March 1896, and the Director of Public Instruction's rules for the distribution of stipends to pupils and teachers, dated the 18th January 1901.

(To be paid by the District Inspector of Schools.)

FOR MERIT.

Name and address of teacher.	Monthly amount of stipend.	Centre of examination.	Subject.
Stipends tenable for one year from September 1934.			
	Rs.		
Pandit Krishnadas Tarkatirtha, Gaila Kabindra College, Gaila, Bakla, Barisal.	12	Bakla ..	Mugdhabodha.
,, Krishna Prosad Sankhyatirtha, Bhupatinagar, Khalisabhanga, Midnapore.	12	Contai ..	Sankshiptasar.
,, Chandrikadatta Misra, 5, Sukh Lal Jahuri Lane, Banstala, Calcutta.	12	Calcutta ..	Sankhya.
,, Satyananda Goswami, 161, Harrison Road, Calcutta ..	12	Ditto ..	Puran.
,, Kalipada Shastri, Pasupati Basu Chatuspathi, 5, Biswakosh Lane, Bagbazar, Calcutta.	12	Ditto ..	Ditto.
Mahamahopadhyaya, Chandidas Nyaya Tarkatirtha, Nabadwip, Nadia.	12	Ditto ..	Vedanta (শ).

	Name and address of teacher.	Monthly amount of stipend.	Centre of examination.	Subject.
	By adding up marks.			
Pandit,	Purandas Saptatirtha, Corporation Tol, 15, Mohanbagan Lane, Calcutta.	12	Calcutta ..	....
,,	Surendralal Smrititirtha, Alampur, Dhalghat, Chittagong ..	12	Patiya ..	....
,,	Brajanath Kavya Vedantatirtha, Barakamarda, Kharuigarh, Midnapore.	12	Amarshi ..	....
,,	Satinath Vidyabhusan, Hemnagar, Midnapore ..	12	Hemnagar ..	....
,,	Kanaiya Prasad Sastri, H. S. Maha Vidyalaya, Barabazar, Calcutta.	12	Calcutta ..	....
,,	Ram Chhabila Sastri, S. N. Vidyalaya, 6, Mandir Street, Calcutta.	12	Ditto ..	....
,,	Ashutosh Kavyatirtha, Khalisakota, Barisal ..	12	Bakla ..	....
,,	Rishiraj Tripathi, H. S. Maha Vidyalaya, Barabazar, Calcutta	12	Calcutta ..	....
,,	Ramraj Tripathi, H. S. Maha Vidyalaya, Barabazar, Calcutta	10	Ditto ..	....
,,	Dharmanath Tripathi, 13, Shib Thakur Lane, Calcutta ..	10	Ditto ..	....
,,	Abodhbihari Tripathi, Pustikar Veda Vidyalaya, 49, Shib Thakur Lane, Calcutta.	10	Ditto ..	....
,,	Jatindra Nath Das Gupta, Vidyasagar, Kabindra College, Caila, Barisal.	10	Bakla ..	....
,,	Brajanarayan Sastri, 16, Kasidatta Street, Calcutta ..	10	Calcutta ..	....
,,	Bhabananda Kavyaratna, Nabadwip, Nadia ..	10	Nabadwip ..	....
,,	Atul Krishna Panchatirtha, Chaitanya Chatuspathi, Nabadwip, Nadia.	10	Ditto ..	....
	Stipends for the encouragement of teachers in backward localities.			
Pandit	Harendranath Siddhantabhusan, Kamini Sundari Chatuspathi, Barisal.	10	Barisal ..	....
,,	Chintaharan Smrititirtha, Kirtipasa, Barisal ..	10	Ditto ..	....
,,	Karunamay Kavya Smrititirtha, Tarkeswar, Hooghly ..	10	Ghatal ..	....
,,	Chandramohan Kavyabinode, Comilla, Tippera ..	10	Comilla ..	....
,,	Jaynarayan Misra, Kavyatirtha, Samantakhanda, Kharuigarh, Midnapore.	10	Contai ..	....
,,	Kalikumar Kavyatirtha, Mahajan, Sagareswar, Midnapore ..	10	Ditto ..	....
	Stipends reserved for Nyaya.			
Pandit	Kalikrishna Tarkatirtha, Gauripur, Mymensingh ..	12	Kishoregunge ..	Nyaya (স্ব).
,,	Ramesh Chandra Tarkatirtha, Maharani Homanta Kumari Sanskrit College, Rajshahi.	10	Rajshahi ..	Ditto.
	Harakumar Tagore Tol Stipends reserved for Calcutta Pandit Sabha.			
	(To be paid by the Principal, Sanskrit College, Calcutta.)			
Pandit	Sakaldeo Pandey, H. S. Maha Vidyalaya, Barabazar, Calcutta	6	Calcutta ..	....
,,	Raghunath Tribedi, Satyanarayan Madhab Misra Pathsala, Salkia, Howrah.	6	Ditto ..	....
,,	Ramekbal Tripathi, 93-2, Baitakkhana Road, Sanga Veda Vidyalaya, Sibakumar Bhaban, Calcutta.	5	Ditto ..	....
,,	Bhabani Bhusan Kavya Vyakaran Sankhyatirtha, 31, Deb Lane, Intally, Calcutta.	5	Ditto ..	....
,,	Rambali Pandey, 6-4, Ward Institution, Calcutta ..	5	Ditto ..	....
,,	Basudeb Tarkatirtha, 23-3-2A, Rupnarayan Nandan Lane, Bhawanipore, Calcutta.	5	Ditto ..	....

J. M. BOTTOMLEY,

Director of Public Instruction, Bengal.

Calcutta, the 5th January 1935.

Board of Intermediate and Secondary Education, Dacca.

NOTIFICATION No. 6975.

Ramna, the 22nd December 1934.

EXAMINATIONS, 1935.

It is hereby notified for general information that the ensuing examinations to be conducted by the Board of Intermediate and Secondary Education, Dacca, will be held on the dates given below :—

Date.	Day.	Morning. 10 a.m. to 1 p.m.	Afternoon. 2 p.m. to 5 p.m.
High School Examination.			
18th March	Monday	English, first paper	English, second paper.
19th ,,	Tuesday	Mathematics (Compulsory)	Vernacular—Bengali and Urdu.
23rd ,,	Saturday	Geography	History.
25th ,,	Monday	Mathematics (Additional). Hygiene. General Science. Classical Languages :— Sanskrit, Arabic, Persian and Bengali Literature for girls.	
High Madrasa Examination.			
18th March	Monday	English, first paper	English, second paper.
19th ,,	Tuesday	Mathematics (Additional)	Vernacular—Bengali and Urdu.
23rd ,,	Saturday	Fiqh, Faraiz and Aqaid	Genral History, Islamic History.
25th ,,	Monday	Mathematics (Compulsory).	
26th ,,	Tuesday	Arabic, first paper	Arabic, second paper.
Intermediate Examination in Group "A" (Arts).			
18th March	Monday	English	Vernacular—Bengali, Urdu, Assamese. Alternative paper in English.
19th ,,	Tuesday	English Literature, first paper	English Literature, second paper.
23rd ,,	Saturday	Mathematics, first paper	Mathematics, second paper.
		Child Psychology, first paper	Child Psychology, second paper.
25th ,,	Monday	Classical Languages :— Sanskrit, Arabic, Persian and Bengali Literature for women candidates, first paper.	Classical Languages :— Sanskrit, Arabic, Persian and Bengali Literature for women candidates, second paper.
26th ,,	Tuesday	Economics, first paper	Economics, second paper.
27th ,,	Wednesday	History, first paper	History, second paper.
28th ,,	Thursday	Logic, first paper	Logic, second paper.
		Geography, first paper	Geography, second paper.
Intermediate Examination in Group "B" (Science).			
18th March	Monday	English	Vernacular—Bengali and Urdu.
23rd ,,	Saturday	Mathematics, first paper	Mathematics, second paper.
25th ,,	Monday	Physics, first paper	Physics, second paper.
26th ,,	Tuesday	Chemistry, first paper	Chemistry, second paper.
27th ,,	Wednesday	Botany, first paper	Botany, second paper.
28th ,,	Thursday	Geography, first paper	Geography, second paper.
Intermediate Examination in Group "C" (Islamic Studies).			
18th March	Monday	English	Vernacular—Bengali and Urdu.
19th ,,	Tuesday	English Literature, first paper	English Literature, second paper.
		Kalam and Arabic Logic, first paper	Kalam and Arabic Logic, second paper.
		Islamic History, first paper	Islamic History, second paper.
23rd ,,	Saturday	Arabic, first paper	Arabic, second paper.
25th ,,	Monday	Fiqh and Usul, first paper	Fiqh and Usul, second paper.
26th ,,	Tuesday	Quran and Hadis, first paper	Quran and Hadis, second paper.
27th ,,	Wednesday	History, first paper	History, second paper.
Intermediate Examination in Group "D" (Dyeing).			
18th March	Monday	English	Vernacular—Bengali.
19th ,,	Tuesday	Principles of Dyeing.	
23rd ,,	Saturday	Mathematics, first paper	Mathematics, second paper.
25th ,,	Monday	Physics, first paper	Physics, second paper.
26th ,,	Tuesday	Chemistry, first paper	Chemistry, second paper.
27th ,,	Wednesday	Practical Dyeing (from 11 a.m.).	
Intermediate Examination in Group "E" (Commerce).			
18th March	Monday	English	Vernacular—Bengali, Assamese, Alternative Paper in English.
19th ,,	Tuesday	Methods of Business and Commercial Correspondence, first paper.	Methods of Business and Commercial Correspondence, second paper.
25th ,,	Monday	Shorthand (from 11 a.m.) Commercial Arithmetic. Commercial History.	Book-keeping and Simple Accountancy.
26th ,,	Tuesday	Economics, first paper	Economics, second paper.
28th ,,	Thursday	Geography, first paper	Geography, second paper.

No examination will be held on Wednesday, Thursday and Friday (the 20th, 21st and 22nd March 1935) and Sunday (the 24th March 1935).

The centres for the High Madrasa Examination will be Dacca, Chittagong, Chinsura, Serajganj, Mymensingh, Comilla, Rajshahi and Noakhali and the centres for the Intermediate Examination in Group "C" will be Dacca, Chittagong and Serajganj. All other examinations will be held only at Dacca.

The dates for the Oral Test in English for the Intermediate Examination (all groups) will be notified later.

A. KHALIQ, *Secretary.*

Burdwan Division.

Results of the Primary (Maktab) Final Examination, 1934.

Chinsura, the 27th December 1934.

District Burdwan.

(E) indicates passed in English.

Roll. No.	Name.	Division.
	Burdwan Municipal H. E. School Centre.	
	Bajekumarpur U. P.	
1	Ram Kinkar Mandal (E) ..	II
2	Krishna Chandra Nandi (E) ..	I
	Painta U. P.	
3	Monoranjan Dutta (E) ..	I
4	Sudhir Kumar Dutta (E) ..	I
5	Bhabani Prasad Dutta (E) ..	II
	Jadavpur U. P.	
6	Gopal Chandra Biswas (E) ..	I
	Haripur U. P.	
7	Kamal Krishna Pan (E) ..	II
	Khajurhati U. P. Maktab.	
9	Kiriti Bhusan Ray (E) ..	I
10	Saikh Nazem Hossain ..	I
	Sagrai U. P.	
11	Gopal Chandra Panja ..	I
	Madanagore U. P.	
12	Amarendranath Dan (E) ..	I
	Kentey U. P.	
14	Ram Gopal Sau (E) ..	II
	Kashiara U. P.	
16	Sadananda Mandal (E) ..	I
17	Susil Kumar Chattopadhya ..	II
18	Satya Narayan Sinha (E) ..	I
	Korar U. P.	
20	Satkari Mandal ..	II
	Sinhapara U. P.	
21	Prafulla Kumar Pal ..	I
22	Gadadhar Ray ..	I
	Sadya U. P.	
23	Provakar Kower (E) ..	I
24	Prafulla Chandra Kower (E) ..	I
26	Jay Krishna Muchi ..	II
	Dheria U. P.	
28	Lakshi Narayan Mukhopadya (E) ..	I
	Kashipur U. P.	
29	Biswa Nath Kower ..	I
30	Mahadeb Bandyopadhya (E) ..	I
31	Lakshi Narayan Mandal ..	I
32	Biswa Nath Chowdhury ..	II
34	Bibhuti Bhusan Mukhopadhya (E) ..	II
35	Sreemati Shib Shadhan Saha (E) ..	II
	Kamarpara-Mistripara U. P.	
38	Lal Gopal Kundu (E) ..	II
	Parhat U. P.	
41	Anath Nath Ray ..	I
42	Chittaranjan Ghatak ..	II

Roll No.	Name.	Division.
	Jagdabad U. P.	
43	Bhola Nath Das (E) ..	I
44	Nil Ratan Dutt ..	II
45	Chira Ranjan Haldar (E) ..	I
46	Nakul Chandra Ghosh (E) ..	I
47	Sudhir Kumar Dutt ..	I
48	Durgapada Haldar (E) ..	I
	Panrui U. P.	
49	Chandi Charan Bhattacharjya (E) ..	II
	Rai Ramchandrapur U. P.	
57	Bhuma Ranjan Mukhopadhya (E) ..	II
58	Birendra Kumar Bandopadya (E) ..	II
59	Baidya Nath Ray (E) ..	II
60	Ajit Kumar Dhara (E) ..	II
61	Ananda Lal Kundu (E) ..	II
62	Sreemati Arati Debi (E) ..	II
63	Sreemati Anupama Debi (E) ..	I
	Kamarpara East U. P.	
64	Surja Kumar Chattopadhya (E) ..	II
65	Hareram Das (E) ..	I
	Kalipahari U. P.	
68	Pulin Behari De (E) ..	I
69	Anil Kumar Mandal (E) ..	I
	Burar U. P.	
74	Kalipada Ghosh (E) ..	II
	Bhandardihi U. P.	
77	Biswa Nath Guha (E) ..	I
	Bamsore U. P.	
78	Bipad Bhanjan Saha (E) ..	I
	Basuda U. P.	
79	Baidya Nath Gangopadya ..	II
	Bhumsore U. P. Maktab.	
81	Kobad Hossain ..	II
	Nutongram U. P. Maktab.	
82	Sheikh Jane Alam ..	II
	Tentral Board U. P. Maktab.	
85	Nur Muhammad (E) ..	II
	Noadah U. P.	
87	Jageswar Roy (E) ..	I
88	Radhashyam Mondal (E) ..	I
89	Gobinda Das Mondal ..	II
90	Golak Behari Thakur (E) ..	I
91	Gopeswar Paja (E) ..	II
93	Banikantha Mondal ..	II
94	Kinkar Chandra Das Karmakar (E) ..	II
	Shibdah U. P.	
95	Shaikh Khoda Nawaz ..	I
96	Md. Kibria ..	I
	Eral U. P.	
97	Ajit Kumar Raja ..	I
98	Banamali Roy ..	I
99	Shamapada Kowar ..	I
100	Gouripada Bhattacharjee ..	I
101	Chandi Charan Kha ..	I
103	Nihar Ranjan Mukhopaddhya ..	I
	Telta U. P.	
105	Birajananda Mukhopaddhya ..	II
106	Panchanan Datta ..	II

Roll No.	Name.	Division.
	Dariapur U. P.	
109	Fani Bhusan Mukhopaddhya ..	II
	Dhankora U. P.	
110	Ajit Kumar Ghosh ..	II
115	Shambhunath Mondal ..	II
	Kurumba U. P.	
117	Saranan Mondal ..	II
	Jamtara U. P.	
118	Mahmod Mahasin ..	II
	Amrargar U. P.	
120	Satynarayan Karmakar (E) ..	I
121	Jagat Bandhu Bhattacharjee (E) ..	I
122	Nitaychandra Roy (E) ..	II
124	Gopal Chandra Gorai ..	I
	Shibbati U. P.	
125	Karali Mohan Mondal (E) ..	I
126	Ratnakar Ghosh (E) ..	II
	Swain U. P.	
127	Shasanka Bhusan Bhattacharjee ..	II
128	Addyata Prosad Kumbhakar (E) ..	II
	Pitchkuri U. P.	
130	Sudha Krishna Sarkar (E) ..	I
	Bhuera U. P.	
135	Walid Mollah ..	II
136	Gouri Mohan Gupta ..	II
137	Bankim Chandra Rakshit ..	II
138	Hara Kumar Sen ..	I
	Genrai U. P.	
139	Md. Zakeria Mollah ..	II
	Kubajpur U. P.	
142	Kamal Kumar Shain ..	I
143	Dhirendranath Bhattacharjya ..	I
144	Mandarani Debi ..	I
145	Bimal Kumar Shain ..	I
146	Hirendranath Bhattacharjya ..	II
	Hargram U. P.	
148	Abhoyapada Bandyopadya (E) ..	I
149	Baidyanath Mukhopadhaya (E) ..	II

Burdwan Town School Centre.

	Burdwan G. T. Practising U. P.	
1	Haragobinda Sarkar (E) ..	I
2	Bijoy Kali Mukherjee (E) ..	II
	Khoshbagan Model Primary.	
3	Bibhuti Bhushan Das (E) ..	I
4	Satkari Mukherjee (E) ..	I
5	Shaikh Fazlur Rohman (E) ..	I
6	Shaikh Abdul Huq (E) ..	I
7	Kumud Ranjan Pal (E) ..	II
8	Narayan Prasanna Roy (E) ..	II
9	Pashupati Bagdi ..	II
11	Madan Mohan Bhowmik (E) ..	II
12	Sukumar Ch. Nath (E) ..	II
15	Monoranjan Roy (E) ..	II

Roll No.	Name.	Division.
	Puratanchak Model Primary (Maktab).	
17	Shyamsundar Basu (E) ..	I
18	Satya Narayan Dey (E) ..	I
19	Sahadat Hossain (E) ..	II
20	Shaikh Badrul Alam (E) ..	II
21	Md. Eusuf Khan (E) ..	II
22	Shaikh Abdus Sakur ..	I
23	Nani Gopal Mondal (E) ..	I
24	Md. Mannan (E) ..	II
25	Kamakshya Ch. Pramanic (E) ..	II
26	Kartik Ch. Nag ..	II
27	Shaikh Abdul Hamid ..	II
28	Md. Sultan ..	II
29	Md. Chistia (E) ..	II
30	Paritosh Dey (E) ..	II
31	Shaikh Abdul Jalil ..	II
	Nilpur Model Primary (Maktab).	
32	Gopi Pada Das (E) ..	II
33	Md. Musa ..	II
34	Sudhir Ch. Ghosh ..	II
	Joteram F. P.	
36	Krishna Kamal Chattopadhyay (E) ..	II
37	Krishna Kishor Mondal (E) ..	II
38	Paresh Nath Saha (E) ..	II
40	Najid Rohman (E) ..	II
	Napara F. P.	
41	Debidas Chakravarty (E) ..	II
42	Bibhuti Bhushan Ghosh (E) ..	II
	Rayan U. P.	
44	Kartick Ch. Mondal ..	II
45	Gobinda Ch. Roy (E) ..	I
46	Gadadhar Bhattacharya (E) ..	II
47	Radha Gobinda Hati (E) ..	II
	Jamar U. P. (Maktab).	
48	Shaikh Abdul Goni (E) ..	I
49	Nityananda Kowar (E) ..	I
	Nerodighi U. P. (Maktab).	
51	Shaikh Nausad Ali ..	II
52	Shaikh Anwar Ali ..	II
	Nutangram U. P.	
55	Md. Musa (E) ..	II
	Chandanpur U. P.	
57	Abdus Sattar ..	II
58	Shaikh Ayal Huq ..	II
	Kaligram U. P.	
60	Dibakar Bairagi ..	II
62	Sudhir K. Roy ..	II
	Satinandi U. P.	
64	Panchanan Laha ..	I
	Khano U. P. No. I.	
65	Modan Mohan Mondal (E) ..	II
67	Narayan Ch. Datta (E) ..	II
	Khano U. P. No. II.	
68	Abu Mohammed Khan (E)	II

Roll No.	Name.	Division.
	Joykrishnapur U. P.	
69	Arabinda Guin (E)	II
70	Sreemati Durgabala Hazra (E)	I
71	Thaka Hari Hazra (E)	I
72	Prafulla K. Roy (E)	II
74	Amulyadhan Mondal (E)	I
75	Haragobinda Guin (E)	I
76	Bhabani Prosad Das (E)	I
77	Satya Kinkar Mondal (E)	I
78	Radhagobinda Chattopadhyaya (E)	I
79	Phakir Ch. Hazra (E)	I
	Kurkuba U. P.	
81	Basanta K. Sarkar (E)	I
	Goligram U. P.	
82	Tara Kali Sadhu (E)	I
	Sonda U. P.	
87	Santosh K. Ghosh (E)	II
	Mithapur U. P.	
89	Barindra K. Sen (E)	I
90	Bhuban Ch. Sham	II
91	Gobardhan Sham	II
92	Phakir Ch. Samanta (E)	II
	Guhagram U. P.	
93	Saber Ali Mondal	II
94	Saktipada Bhattacharjya	II
	Sandhipur U. P.	
95	Anantaram Chatterjee	I
96	Abdul Mahed Mondal	I
97	Shaikh Daud	I
	Budbud U. P.	
98	Baburam Kundu	II
99	Panchkari Bandopadhya	II
	Maro U. P.	
100	Radhashyam Bondopadhya	I
101	Sudhanshu Sekhar Moto	II
	Bamuna U. P.	
103	Sk. Abdul Ohab (E)	I
104	Jagabandhu Chowdhury (E)	I
105	Bhudeb Chandra Hati (E)	I
106	Mozibar Rahman (E)	I
107	Mohim Ranjan Mandal (E)	II
108	Anil Baran Kunar (E)	I
	Nabastha U. P.	
110	Kamal Krishna Biswas (E)	II
111	Bibhuti Bhusan Chakrabarty (E)	I
112	Tinkari Pramanik (E)	II
	Chakundi U. P.	
113	Bhakta Ch. Bhattacharya (E)	II
114	Rampada Som (E)	II
	Nisiragarh U. P.	
120	Jaganath Pal (E)	II
	Bagila U. P.	
122	Anil Chandra Dass (E)	II
123	Bisad Bhanjan Kumar (E)	I
124	Jasoda Nandan De (E)	I
	Barkona U. P.	
126	Satya Narayan Rukshit (E)	II
127	Sailendra Nath Roy (E)	II

Roll No.	Name.	Division.
	Sadipur U. P.	
128	Joykrishna Ghosh (E)	I
129	Durgapada Ghosh (E)	I
	Mohingoria U. P.	
132	Kartick Chandra Ghosh (E)	I
133	Harendra Nath Ghosh (E)	I
134	Jugal Kishor Hazra (E)	I
	Mohindar U. P.	
135	Rampada Pal (E)	II
136	Nrisinha Prasad Chatterji (E)	II
	Dattapara U. P.	
139	Kali Pada Ghosh (E)	I
140	Lakshi Narayan Ghosh (E)	II
	Borugram U. P.	
141	Saktipada Pal (E)	I
142	Kamala Kanta Das (E)	II
	Palla Board U. P.	
143	Lakshmi Sadhan Halder (E)	I
	Katwa K. D. Institution Centre.	
	Katwa Practising U. P.	
1	Nihar Ranjan Das (E)	I
2	Shaikh Herastullah (E)	I
3	Panchanan Banerjee (E)	II
4	Brindaban Chandra Das (E)	II
	Katwa Govindachandra U. P.	
6	Brahmadutta Marawari (E)	I
7	Shaikh Badarodoja (E)	I
8	Kshetra Nath Chakravertty (E)	II
9	Sankar Prasad Dutta (E)	II
10	Lakhmi Narayan Dutta	II
11	Sudhir Kumar Pal	II
13	Satya Narayan Das (E)	II
	Katwa Arjyabanga U. P.	
14	Kishori Mohan Kaviraj	II
16	Murari Mohan Kaviraj	II
17	Bipad Bhanjan Das	II
	Katwa (Srechari) Sankaripara U. P.	
21	Shaikh Md. Khoda Bux	II
	Kasigram U. P.	
23	Abhayapada Roy	II
24	Bhakti Bhusan Mukherjee	II
25	Mahadeb Garain	II
27	Bejoy Kali Bhattacharjya	II
	Arjundihi U. P.	
30	Gangaprasad Basu	I
	Nandanpur U. P.	
33	Kshudiram Saha	II
34	Gora Chand Mondal	I
	Deasin U. P.	
36	Amrita Lal Mukherjee	I
37	Narayan Chandra Pal	I
	Panjoa U. P.	
38	Meherjan Shaikh	I
39	Ajit Kumar Gupta	II

Roll No.	Name.	Division.
	Kalikapur U. P.	
40	Md. Hossain Khan	I
41	Janmejaya Das	II
42	Haridas Ghosh	II
	Gidhagram U. P.	
43	Anil Kumar Choudhuri (E)	I
44	Bansi Badan Koner (E)	II
45	Ekkari Mistri	II
	Kamal U. P.	
46	Baidya Nath Kar	I
	Saragram U. P.	
48	Sagar Chandra Maji	I
	Kalsa U. P	
50	Hira Lal Mukherjee	I
51	Bansa Gopal Mullick	II
52	Ranjit Kumar Mullick	II
53	Chandra Nath Shain	I
54	Shambhu Nath Chatterjee	II
55	Lakhmi Narayan Mullick	II
	Kuara U. P.	
56	Mritunjoy Chatterjee	I
57	Gadadhar Ghosh	II
	Puini U. P.	
60	Birinchi Prasad Jash	I
61	Byomkesh Bairagya	I
62	Sankari Charan Pal	I
	Kaithan U. P. Maktab.	
63	Md. Hafijar Rahman	II
	Khanji U. P.	
65	Manindra Mohan Chakravertty	II
	Serandi U. P.	
69	Anil Kumar Goswami	I
	Gurparah U. P.	
70	Chandi Charan Chatterjee	I
71	Sanjib Kumar Pal	II
	Maliha U. P.	
73	Shibram Bhattacharjya	I
74	Hriday Nath Banerjee	I
	Kenguri U. P.	
75	Khondekar Golam Mohiuddin	I
76	Bimalendu Kumar Chakravertty (E)	II
77	Purnendu Kumar Chakravertty (E)	I
78	Kartic Chandra Banerjee (E)	I
79	Balaram Roy (E)	I
	Chenchuri U. P.	
81	Mirja Badroodojja	I
	Khatundi U. P.	
83	Harakali Mukherjee	I
84	Naba Kumar Mukherjee	I
85	Sudhir Kumar Mondal	I
86	Arun Kumar Banerjee	I
87	Fullara Prasad Mukherjee	I
88	Jagdiswar Bhattacharjya	I
89	Shankar Chandra Mukherjee	I
90	Shibaram Mondal	I
91	Anil Kumar Mitra	I

Roll No.	Name.	Division.
	Kulai U. P.	
92	Niranka Mohan Mondal	I
93	Benoy Kumar Das	II
94	Anil Kumar Chakravertty	II
95	Ananta Lal Ghoshal	II
96	Hrishikesh Sarkar	II
97	Bejoy Kumar Das	II
	Chakulia U. P.	
99	Md. Idris Hossain (E)	I
100	Dhanapati Pal (E)	I
101	Bholanath Ghosh (E)	II
	Icha Batagram U. P.	
104	Nara Narayan Pal	I
105	Balaram Ghosh	II
107	Haridas Ghosh	II
108	Ekkari Bondopadhya	II
109	Khudiram Ghosh	II
110	Kamala Kanta Mondal	II
113	Gour Hari Pal	II
	Kalanpur U. P.	
114	Sasanka Sekhar Samanta	I
115	Biswanath Bhattacharya	II
116	Sudha Krishna Mondal	II
117	Nandalal Shoo	I
	Musham U. P.	
121	Monoranjan Nandi	I
122	Ajitkumar Roy	I
124	Santikumar Roy	II
125	Girindra Mohan Roy	II
	Mahartuba U. P.	
126	Nirmalendu Ghosh	II
127	Dol Purnima Ghosh	II
129	Rasamay Ghosh	II
130	Nibaran Chandra Ghosh	II
	Palishgram U. P.	
131	Shaikh Habibar Rahman (E)	I
132	Shaikh Akkas Rahman (E)	II
133	Chittaranjan Santra (E)	I
134	Hiranmay Kumar Gangopadhya (E)	I
135	Kamakshya Kumar Roy (E)	II
136	Gomeswar Kumar Jash (E)	I
137	Shaikh Abdul Azim (E)	II
139	Fatik Chandra De (E)	I
	Negun U. P.	
141	Bhagaban Das Adhikari	I
142	Natabar Singha	I
143	Bankim Chandra Adhikari	I
144	Rabi Kumar Sar	I
	Sauri U. P.	
147	Ekkari Mondal	II
	Shambazar U. P.	
152	Tarapada Ghosh	II
154	Bhabani Charan Ghosh	II
	Pindira U. P.	
155	Sudhir Chandra Mondal	I
156	Satyendra Narayan Roy	I
157	Beni Madhab Mondal	I
158	Binay Kumar Saha (E)	I
159	Mokbul Hossain	II
160	Batakrishna Ghosh	II
161	Sudhir Chandra De	II
162	Bholanath De	II
163	Anil Kumar De	II

Roll No.	Name.	Division.
	Kunda U. P.	
165	Ananda Mohan Mondal (E)	I
166	Panchanan Panja (E)	I
167	Birinchi Mohan Santra (E)	I
168	Jagadish Chandra Panja (E)	I
169	Choudhury Nabi Nawar Hossain (E)	II
170	Kamalakanta Santra (E)	II
	Kurumba U. P.	
171	Bagalakanta Chakrabarty	I
173	Kamalakanta Kundoo	II
	Belgram U. P.	
174	Shambhunath Paul	I
	Babladihi U. P.	
176	Niranjan Ghosh (E)	I
177	Paramananda Chaudhury (E)	I
178	Bhairab Chandra Ghosh (E)	I
179	Sudhakar Roy (E)	II
182	Kumud Ranjan Dutta (E)	II
	Noapara U. P.	
183	Baksar Rahman Mandal (E)	I
	Thangapara U. P.	
185	Sayeda Bogum (E)	I
186	Panchkari Ghosh (E)	I
187	Syed Nazem Hossain (E)	II
188	Ganga Narayan Dhara (E)	I
189	Shaikh Asimuddin (E)	II
	Kulshuna U. P.	
190	Shaikh Ekram Ali	I
191	Tinkari Gupta	II
192	Panchanan Ghosh	I
193	Santiram Bhattacharyya	II
	Shimulia U. P.	
195	Shaikh Eshaque	II
196	Panchanan Ghosh	II
197	Chittaranjan Haldar	II
198	Amarnath Chakraborty	II
200	Rabindranath Baishnab	II
	Brahmanpara U. P.	
202	Biswa Nath Chatterjee (E)	I
203	Pranab Kumar Biswas (E)	I
204	Jajati Kumar Chowdhury (E)	I
205	Mahendra Singha (E)	II
206	Aditi Kumar Singha (E)	II
207	Md. Abdul Chattar (E)	II
	Denur U. P.	
208	Anil Kumar Bhattacharyya	II
209	Durgadas Chowdhury	II
210	Mrinal Kanti Kundu	I
213	Ram Krishna Kundu	I
	Kalna Raj H. E. School Centre.	
	Kadanba U. P. (Maktab).	
1	Muhammad Saukat Ali (E)	I
	Happania U. P. (Maktab).	
5	Sasadhar Ghose (E)	I
7	Balaram Bhattacharya	II
8	Narayan Prasad Mandal	II
9	Abdus Sobhan Shaikh (E)	II
	Dirghapara U. P.	
10	Hinanka Sashi Kundu (E)	I
11	Ajay Narayan Roy (E)	I
12	Jamini Mohon Shome (E)	I
13	Tarak Prasad Ghose (E)	I

Roll No.	Name.	Division.
	Medgachi U. P.	
15	Ajit Kumar Roy	I
16	Kali Sankar Bhattacharyya	II
17	Bibhuti Bhusan Kundu	I
18	Baidya Nath Ghose (E)	I
19	Dhirendra Nath Sinha Roy (E)	II
20	Birendra Nath Sinha Roy (E)	II
	Bohorkuli U. P.	
21	Dev Narayan Ganguly (E)	I
22	Gouri Prasad Bhattacharyya (E)	I
23	Kedar Nath Kumar (E)	I
25	Prahlad Chandra Nandi	II
26	Shib Chandra Paul	II
	Kalna Municipal F. P.	
27	Narayan Chandra Ruidas (E)	I
28	Achal Kumar Mukherjee (E)	I
29	Ranjit Kumar Dutta (E)	I
30	Anil Kumar De (E)	I
31	Kamalesh Chandra Bhattacharyya (E)	II
32	Debendra Nath Paul (E)	I
	Chandpur U. P.	
36	Fanindra Nath Nath	II
	Moheswarpur U. P. (Maktab).	
38	Shaikh Fakir Muhammad (E)	I
39	Bedabati Debi	II
	Khorosgram U. P. (Maktab).	
40	Gul Muhammad Mandal	I
41	Zikaria Mandal	II
	Mahadevpur U. P. Maktab.	
42	Suniti Kumar Chatterjee (E)	II
43	Santosh Kumar Mukherjee (E)	II
44	Raj Narayan Chowdhury (E)	II
	Khandra U. P.	
46	Shama Pada Mandal (E)	I
	Karanda U. P.	
48	Bhakta Pada Mandal	I
	Nabagram U. P.	
49	Haren Chandra Roy (E)	I
50	Sridam Chandra Hati (E)	I
	Bhagra U. P. (Maktab).	
52	Shaikh Khoda Boksh	I
53	Muhammad Unash Shah	I
55	Jobed Ali Shah	II
	Sinhati U. P.	
56	Bhola Nath Karmakar	II
	Patua U. P.	
58	Girija Bhusan Bhattacharyya	I
59	Boto Krishna Kundu	I
60	Gopeswar Chowdhury	I
61	Tripureswar Mazumdar	I
62	Shib Nath Bose	I
63	Amalendu Dakshit	I
64	Dinesh Chandra Mullick	I
	Hurkadanga U. P. (Maktab).	
65	Muhammad Idris	II
66	Abdul Mannan	II
67	Muhammad Afzal	II
	Kosha U. P.	
69	Mahima Ranjan Dutta	II
	Kakaria U. P.	
70	Kshudiram Hazra	I

Roll No.	Name.	Division.
	Mahadevpur U. P. (Maktab).	
73	Ajijar Rahaman (E) ..	II
	Dhamache U. P.	
75	Tinkari Biswas ..	I
76	Ajit Kumar Daw ..	I
77	Shyama Pada Goswami ..	I
78	Bhairab Chandra Roy ..	I
	Belenda U. P.	
79	Madhusudan Adhikary (E) ..	I
80	Bhola Nath Show (E) ..	I
81	Basanta Kumar Dutt (E) ..	I
82	Govinda Chandra Paul (E) ..	I
	Kushogoria U. P. (Maktab).	
85	Shaikh Jamat Ali (E) ..	I
	Purunia U. P.	
87	Krishna Pada Garang (E) ..	II
88	Biswanath Das (E) ..	I
89	Anil Kumar Dutt (E) ..	I
	Bauni U. P.	
90	Bhola Nath Hazra ..	II
91	Sital Chandra Kower (E) ..	II
93	Sristidhar Nandi (E) ..	II
	Kalni U. P.	
95	Biswaranjan Pal ..	II
	Asansol E. I. R. H. E. School Centre.	
	Barrett Municipal U. P.	
1	Mriganka Sekhar Patasar (E) ..	I
2	Sashanka Sekhar Chand (E) ..	I
3	Baidya Nath Roy ..	I
4	Budheswar Kundu (E) ..	II
5	Haradhan Roy (E) ..	I
6	Sunil Kumar Banerjee (E) ..	I
7	Murali Dhar Choudhury (E) ..	I
8	Chandra Sekhar Parasar (E) ..	I
9	Narayan Das (E) ..	I
10	Dhirendra Nath Chatterjee (E) ..	I
11	Anath Nath Roy ..	II
	Kalipandya Municipal U. P.	
12	Pravat Kusum Chatterjee (E) ..	I
13	Tarak Nath Pathak (E) ..	II
14	Gadadhar Chatterjee (E) ..	I
15	Upendra Kanta Chakrabarty (E) ..	I
16	Syama Pada Bhattacharjee (E) ..	II
17	Satis Chandra Mondal (E) ..	II
18	Adhir Chandra Bose (E) ..	II
19	Ramesh Chandra Dass (E) ..	I
20	Lakshmi Narayan Gorai (E) ..	II
21	Ram Sankar Mondal (E) ..	II
22	Muxtaba Quli Khan (E) ..	II
23	Sk. Abdur Rahaman (E) ..	II
	Karanani Municipal U. P.	
26	Bana Durlabh Patal (E) ..	II
27	Biswa Nath Ram ..	II
29	Kumarendra Nath Sarkar (E) ..	I
30	Sailendra Nath Bhattacharjee (E) ..	I
33	Manna Lall Shaw ..	II
34	Dwija Pada Dass ..	II
	Agabeg Municipal U. P.	
38	Amarendra Kumar Bagchi (E) ..	I
40	Ramnandan Ahir (E) ..	I
41	Muktaram Mukherjee (E) ..	II
42	Fakir Muhammad (E) ..	II
44	Abdul Jalil (E) ..	II
45	Abdulla (E) ..	II
50	Ezharal (E) ..	II
53	Lalan Pandey ..	II

Roll No.	Name.	Division.
	Mithani Practising U. P.	
55	Syama Pada Sadhu (E) ..	I
56	Sankar Chandra Sadhu (E) ..	I
58	Shyama Das Mukherjee ..	II
59	Bhabananda Chattaraj ..	II
61	Narayan Chandra Mukherjee ..	II
	Salookchapra (Manbhoom, Asansol, Burdwan).	
65	Anil Baran Mukherjee ..	II
	Ghusik Colliery U. P.	
71	Shaikh Sattar Ali ..	II
	Raghunathbati U. P.	
73	Ram Prasad Mondal ..	II
74	Narayan Kinkar Das ..	I
75	Nibaran Chandra Das ..	II
76	Panchanan Das ..	II
77	Rammoy Kundu ..	I
78	Amar Chandra Saw Mondal ..	II
80	Dibakar Tewari ..	II
	Sripur U. P.	
81	Narayan Chandra Bhattacharyya (E) ..	I
82	Santosh Kumar Maji (E) ..	II
83	Narayan Chandra Mondal (E) ..	I
84	Kamakhya Prosad Ghoshal (E) ..	II
	Kankhoya U. P.	
86	Prativa Sundari Debi (E) ..	I
	Danra U. P.	
88	Pravat Kumar Chattaraj (E) ..	II
89	Phani Bhushan Chatterjee ..	II
91	Gokul Chandra Roy ..	II
	Kalipathar U. P.	
93	Samul Das ..	II
94	Suru Narayan Hasda ..	II
	Jamuria U. P.	
95	Amulya Ratan Das ..	II
	Mejedi U. P.	
96	Khirode Chandra Paul ..	I
97	Amalendu Ghatak ..	II
98	Nritya Gopal Banerjee ..	I
99	Sukhamaya Ghatak ..	II
100	Santi Narayan Chatterjee ..	II
	Amlajora U. P.	
102	Nanda Rani Dasi (E) ..	I
104	Pravakar Sarkar (E) ..	II
107	Jagadish Chandra Kowar (E) ..	II
108	Kushadhwaja Kowar (E) ..	II
110	Bhabani Sankar Kowar (E) ..	II
	Purusha U. P.	
111	Kanai Lal Kongar (E) ..	I
112	Kamakshya Charan Sain (E) ..	I
113	Bala Ram Samanta (E) ..	I
114	Renuka Rekha Debi (E) ..	I
115	Guru Pada Sen (E) ..	II
116	Tulsi Pada Dan ..	I
117	Kali Pada Mandal ..	II
	Madanpur U. P.	
118	Anadi Charan Misra (E) ..	I
119	Bejoy Gopal Misra (E) ..	I
120	Aswini Kumar Goswami (E) ..	I
121	Pradyota Kumar Chatterjee (E) ..	II
122	Ardhendu Sekhar Mukherjee (E) ..	I
123	Amulya Ratan Sadhu (E) ..	I

Roll No.	Name.	Division.
	Chapni Sahara U. P.	
125	Sakti Pada Chatterjee (E)	I
126	Shyama Pada Chatterjee (E)	I
127	Panchanan Ray (E)	I
128	Tinkari Garai (E)	I
	Raniganj Arjunpoti U. P.	
129	Naru Gopal Pathak (E)	II
130	Bhudeb Chandra Sadhu (E)	I
131	Kali Kinkar Chatterjee (E)	II
132	Ajit Kumar Das (E)	II
133	Panchanan Laha (E)	I
	Baktarnagar U. P.	
134	Mahadeb Mandal (E)	I
	Shilampur U. P.	
137	Mono Mohan Sinha (E)	II
138	Bhrigu Ram Ghosh	II
139	Shambhu Nath Ghosh (E)	I
140	Nitai Chandra Chatterjee (E)	II
141	Bagala Charan Mandal (E)	II

District Birbhum.

Nalhati Centre.

	Soreha Primary.	
1	Bholanath Mahara (E)	1
	Chatra Primary.	
2	Sk. Year Mahammad (E)	1
	Chhatina Primary.	
6	Lutful Haque (E)	1
7	Md. Ayub (E)	I
8	Bhadunath Mal (E)	II
9	Rampada Mandal	..
	Nalhati Practising Primary.	
10	Durgacharan Mukherjee (E)	II
11	Md. Mahsin (E)	I
	Nawpara Primary.	
14	Md. Mujammal Haque	II
15	Md. Abdul Bari	II
16	Md. Tojammal Hossain	II
	Mahurapur Primary.	
19	Shyamapada Bhar	II
	Idrakpur Primary.	
21	Satyaniranjan Mandal (E)	II
22	Amjad Mandal (E)	II
24	Jalal Baksh Mallick (E)	1
	Sitalgram Primary.	
26	Sk. Ajahar Hossain (E)	I
27	Satya Kinkar Mandal (E)	II
	Kanakpur Primary.	
30	Lakshminarayanram Bhakat (E)	I
33	Bholadasi Debi	II
	Bantia Primary.	
34	Shaikh Noor Mahammad Mandal (E)	II
35	Sambhunath Banerjee (E)	I
36	Baidyanath Dhar (E)	I
37	Kumarish Chandra Das (E)	I
38	Uma Sankar Chatterjee (E)	II
39	Satyanarayan Chaudhuri (E)	II

Roll No.	Name.	Division.
	Banjor Primary.	
40	Nikilesh Chandra Sinha (E)	I
42	Dhirendranath Choudhuri (E)	II
43	Khagendra Kumar Ghosh (E)	II
44	Jitendranath Mandal (E)	I
	Paikpara Primary.	
45	Ardhendu Kumar Banerjee (E)	I
46	Baidyanath Choudhuri (E)	I
47	Sudhir Kumar Das (E)	I
48	Profulla Kumar Pandit (E)	I
49	Janardan Shah	I
50	Md. Ishahaque Shaikh (E)	I
	Kalitha Primary.	
51	Md. Fakir Ali	II
53	Motahar Hossain (E)	I
	Bandhkala Primary.	
54	Sk. Raosan Ali (E)	II
55	Abdus Salam (E)	I
	Jestha Primary.	
61	Kshirod Prosad Saha (E)	II
	Khanpur Primary.	
64	Purna Chandra Let (E)	II
65	Sripati Dutt (E)	I
66	Sudhansu Sekhar Dutt (E)	II
67	Ganesh Chandra Biswas (E)	II
68	Azimuddin Shaikh (E)	II
	Sahrapur Sonthal Primary.	
70	Somemaudi (E)	I
	Madhura Primary.	
74	Sk. Abdul Gafur (E)	II
	Balia Paba Primary.	
77	Satya Kinkar Banerjee (E)	I
	Kumarsanda Primary.	
78	Sambhunath Das (E)	II
79	Mahibulla Shaikh (E)	II
	Jogai Primary.	
80	Anowaruddin Shaikh (E)	I
81	Mahatab Molla (E)	II
82	Ramdas Mandal (E)	II
	Tiragram Primary.	
89	Abul Hossain (E)	II
90	Kamalapati Ghosh (E)	II
	Mitrapur Primary.	
94	Abdur Rafic Sekh (E)	II
96	Nabiyat Ali Mondal (E)	II
	Amdole Primary.	
99	Taradas Mazumdar (E)	II
100	Bamadas Mazumdar (E)	I
101	Gangadhar Mandal (E)	II
103	Probhat Kumar Mitra (E)	I
104	Satu Sahana (E)	II
105	Patit Paban Sahu (E)	II
108	Korban Ali Mandal (E)	II
109	Erfan Ali Mandal (E)	II
111	Kisoriranjan Ghosh (E)	II
112	Jibananda Karfarma (E)	II

Roll No.	Name.	Division.
	Labpur Centre.	
	Bolpur G. T. Practising.	
1	Yad Ali Khan (E)	I
2	Sheik Shamshuzuha (E)	II
3	Abu Tayab Ali (E)	II
4	Bisva Nath Pal (E)	II
5	Debendra Chandra Nandi (E)	I
	Tikarbeta Board U. P.	
8	Sadhu Charan Das (E)	II
	Nahina U. P. Maktab.	
10	Sekender Hussain (E)	II
	Simait P. U.	
11	Pinak Pani Chowdhuri (E)	I
12	Baidya Nath Chowdhuri (E)	I
13	Muktiram Roy (E)	II
14	Dilip Kumar Chowdhury (E)	II
	Jadavpur U. P.	
19	Shyama Pada Ghosh (E)	II
20	Ramjiban Ghosh (E)	II
21	Sk. Ilias Darud (E)	I
	Adityapur P. U.	
22	Amar Nath Mukherjee (E)	II
	Metakona P. U.	
23	Sk. Shajader Rahman	I
24	Sk. Abdul Jalil	II
	Rautara U. P.	
27	Abdul Halim (E)	II
	Shahpur U. P. Maktab.	
31	Sk. Abdul Mazid Mondol	II
	Koira U. P.	
38	Rabindra Nath Gupta (E)	II
39	Miss Parul Bala Ganguli (E)	II
40	Sk. Najar Ali Shahana (E)	II
	Ghurisha U. P.	
44	Sk. Abdul Rauf	II
	Bahadurpur U. P.	
48	Sk. Abdul Kader	II
49	Sk. Abdul Sattar	II
	Bheramari U. P.	
51	Sk. Sher Ali Mondol (E)	I
	Bhalkuti U. P.	
54	Sadhana Kumar Mazumdar (E)	I
55	Naba Kumar Chakravarty (E)	II
56	Pramatha Nath Mazumdar (E)	II
58	Sambhu Nath Banerjee (E)	II
59	Radha Krishna Mondol (E)	II
	Koichara U. P.	
60	Kshirode Chandra Pal	II
61	Sambhu Nath Ghosh	II
	Kamalpur U. P.	
63	Radha Kamal Banerjee (E)	I
	Ramghati U. P. Maktab.	
64	Ramprasad Ghosh (E)	I
65	Sudhir Kumar Mazumdar (E)	II

Roll No.	Name.	Division.
	Dwarka U. P.	
67	Mahadev Hazra (E)	II
68	Sailaja Sankar Roy (E)	I
69	Narayan Chandra Dutta (E)	II
	Bunia U. P.	
71	Ak-kari Pal (E)	II
74	Banshi Dhar Ghosh (E)	II
75	Sripati Mondol (E)	II
	Charkolgram U. P.	
76	Bhairab Chandra Roy Chowdhury	II
77	Sudhir Kumar Roy Chowdhury	II
78	Bhakta Pada Roy Chowdhury (E)	II
	Hatserandi U. P.	
79	Gouranga Sundor Ghosh	II
	Korea U. P.	
81	Bhakti Bhusan Pal	II
	Brahmankhanda U. P.	
85	Bejoy Chandra Ghosh (E)	I
86	Manikeswar Kowor (E)	II
	Jalandi U. P.	
88	Biswa Nath Mukherjee (E)	I
89	Banamali Masat (E)	I
90	Danujdalan Ghosh (E)	I
91	Shuvankar Mondol (E)	I
92	Kamala Pada Pal (E)	II
	Haranandapur U. P.	
94	Brajashyam Mondol (E)	II
95	Ananta Kumar Ghosh (E)	I
	Kalia U. P.	
96	Anadi Bhusan Ghosh	II
97	Sankar Prosad Sarkar	II
	Bhatra Kazipara U. P.	
98	Susaran Chandra Mandal (E)	I
99	Kashi Nath Mondol (E)	II
	Bamnigram U. P.	
101	Nanda Dulal Das (E)	I
102	Sudhir Kumar Ghosh (E)	II
103	Bangshi Dhar Das (E)	I
104	Bhola Nath Ghosh (E)	II
106	Kuru Ram Das (E)	II
	Kurumghosh U. P.	
107	Sarajaksha Pal	I
108	Umapada Ghosh	II
109	Mrityunjoy Ghosh	I
	Jamna U. P.	
110	Mukti Pada Biswas (E)	I
111	Bhujanga Bhusan Das (E)	I
112	Girija Mohon Chakravarty (E)	I
113	Kashi Nath Nag (E)	II
	Pushulia U. P.	
116	Radha Kishore Mondol (E)	II
117	Oramba Chandra Mazumdar	II
	Dwarka U. P.	
118	Subal Chandra Kurmi (E)	I
	Bunia U. P.	
119	Kali Kinkar Swarnakar (E)	II
120	Bejoy Gopal Hazra (E)	I

Roll No.	Name.	Division.
	Jalandi U. P.	
123	Saktipada Saha (E) ..	I
	Bhatra Kazipara U. P.	
124	Baidya Nath Kundu (E) ..	I
	Aligram Jubutia U. P.	
125	Sudhakar Bayen (E) ..	I
	Indas U. P.	
127	Sristi Dhar Gorai (E) ..	II
	Jalandi U. P.	
129	Panchanon Gorai (E) ..	II
	Haranandapur U. P.	
130	Anadi Bhusan Laha (E) ..	I
	Bamnigram U. P.	
131	Aswini Kumar Pal (E) ..	II
	Kurumghosh U. P.	
133	Ujjal Sankar Das ..	II
	Kamatpur U. P.	
134	Sheik Siddique (E) ..	I
135	Abdul Sattar (E) ..	II
	Ramghati U. P.	
136	Abdur Rashid (E) ..	II
137	Mahammad Musa (E) ..	II
	Dwarka U. P.	
138	Sarafat Hossain (E) ..	II
	Brahmankhanda U. P.	
139	Khandaker Samsul Haque (E) ..	I
	Bhatra Kazirpara U. P.	
142	Sk. Khelafat Hossain (E) ..	II
	Bamnigram U. P.	
144	Ahadbox Dafadar (E) ..	I
	Kamalpur U. P.	
145	Gourangini Dasi ..	II
	Mollarpur Centre.	
	Velian-Moula Primary.	
1	Aswini Kumar Mandal (E) ..	I
2	Subardhan Let (E) ..	I
3	Gangadhar Sawo (E) ..	I
4	Anil Kumar Chatterjee (E) ..	II
5	Nidhiram Bhandari (E) ..	I
6	Kshudiram Bhandari (E) ..	II
	Fatepur Primary.	
7	Amiya Kumar Sinha (E) ..	II
8	Nani Gopal Mandal (E) ..	I
10	Shiba Sankar Ram (E) ..	II
11	Subal Chandra Mandal (E) ..	I
12	Dharanidhar Mandal (E) ..	I
13	Bhaba Taran Bhandari (E) ..	I
14	Subal Chandra Chakravarty (E) ..	II

Roll No.	Name.	Division.
	Mollarpur Primary.	
15	Md. Badrooh Zuha (E) ..	I
16	Md. Muktar Ali (E) ..	I
17	Masudar Rahman (E) ..	II
19	Kalipada Ganguli (E) ..	II
20	Radhakinkar Roy (E) ..	II
21	Radhamohan Roy (E) ..	II
	Muralidangal Primary.	
22	Rakhahari Biswas (E) ..	I
23	Kshudu Gopal Mandal (E) ..	II
	Mahurapur P. U. Primary.	
28	Radha Kanta Karmakar (E) ..	I
29	Purna Chandra Misra (E) ..	II
30	Sachchida Nandan Mandal (E) ..	II
31	Sambhunath De (E) ..	II
	Kundala Primary.	
34	Gurupada Ghosh (E) ..	I
35	Amiya Kumar Chatterjee (E) ..	II
38	Fakir Chandra Mukherjee (E) ..	II
39	Kenaram Ray (E) ..	II
41	Jyoti Shankar Mukherjee (E) ..	II
	Satpalsa Board Primary.	
43	Sisir Kumar Rooj (E) ..	II
44	Gour Chandra Mandal ..	II
45	Gopal Chandra Mandal (E) ..	II
47	Abhimanyu Mandal (E) ..	II
49	Asha Lata Mitra ..	II
	Ghoshgram Primary.	
58	Prafulla Kumar Roy (E) ..	II
59	Satyapada Roy (E) ..	II
	Birchandrapur Primary.	
60	Jasodanandan Das (E) ..	I
61	Kisorimohon Mandal (E) ..	II
62	Anil Kumar Das (E) ..	II
64	Harinarayan Goswami (E) ..	II
67	Durgapada Mandal (E) ..	II
	Majurhati Primary.	
69	Jadunandan Mandal (E) ..	I
	Kasthagara Board Primary.	
73	Mukhtipada Pal (E) ..	I
74	Nagendra Kishore Sadhu (E) ..	I
75	Sovarani Dasi (E) ..	I
76	Dwijapada Dutt (E) ..	II
	Tarapur Board Primary.	
77	Indranarayan Pal (E) ..	I
78	Sivasankar Panda (E) ..	II
79	Buddhadeb Ghosh (E) ..	I
	Suri Centre.	
	Bamnigram U. P.	
1	Atul Chandra Mondal (E) ..	I
2	Kashinath Mondal ..	I
	Palashdanga U. P.	
3	Sankarpada Laha ..	II
	Kunuri U. P.	
14	Duksha Haran Saha ..	II
16	Sridam Chandra Goswami ..	II
17	Lakshmi Narayan Sutradhar ..	II

Roll No.	Name.	Division.
	Parishor U. P.	
18	Tarinipada Gorain (E)	II
19	Narayanpada Gorain (E)	II
	Deriapur U. P.	
20	Kalipada Das	II
22	Bejoy Kumar Saha	II
	Sainthia U. P.	
24	Kishori Mohon Har (E)	I
25	Santiram Mondal (E)	I
26	Annapurna Ghose (E)	I
27	Durgadas Dutta (E)	II
29	Mahadev Mondal	II
	Khoyrakuri U. P.	
30	Kamala Kanta Mondal	II
31	Profulla Kumar Mondal	II
35	Sonaton Gorain	II
	Kurumsa U. P.	
36	Jnanendra Kumar Roy	II
37	Santikumar Das (E)	II
	Dencha Board U. P.	
38	Manasa Kinkar Dutta	I
	Markola U. P.	
40	Uma Sankar Choudhury (E)	I
41	Bishnu Prosad Mitra (E)	I
42	Amarendra Kumar Majumdar (E)	I
	Matpalsa Maktab.	
43	Sekh Sona Ulla	II
45	Mahammed Idrish	II
	Sangra U. P.	
46	Parbati Sankar Bhattacharjee (E)	I
47	Patkori Mondal (E)	I
	Bannigram U. P.	
48	Ranjit Kumar Mukherjee (E)	I
	Makdamnagar U. P.	
49	Khudiram Das (E)	II
	Tentulberia U. P.	
51	Sridhar Chandra Ghose (E)	II
	Heruka Maktab.	
53	Md. Eshak	II
	Paharpur P. U.	
58	Tarak Nath Maharaj (E)	II
59	Taraknath Bhattacharjee (E)	II
60	Bankim Chandra Mukherjee	II
61	Madan Gopal Mondal	II
	Bilsa U. P.	
63	Santi Kumar Mukherjee	I
65	Sekh Abdul Ajid	II
66	Narayanpada Mondal	II
67	Gurupada Mondal	II
	Chandpur P. U.	
68	Sib Sankar Ghose	II
69	Narayandas Mukherjee	II

Roll No.	Name.	Division.
	Koridha U. P.	
70	Ramratan Mondal (E)	II
71	Ramdas Hemran	II
72	Brahma Mohan Sen (E)	II
73	Anil Kumar Hazra (E)	II
74	Kamikshapada Sen (E)	II
75	Kumarish Chandra Bagdi	II
76	Ananda Mohan Sen (E)	II
	Ghatdurlovpur U. P.	
79	Profulla Kumar Roy (E)	I
81	Lala Provakar (E)	II
82	Shibpada Konar (E)	II
83	Lala Provash Kumar	II
	Bhurkuna U. P.	
84	Bankimbehari Ghose (E)	II
85	Sudhir Kumar Bakshi (E)	II
86	Shyamapada Mondal (E)	II
	Bhandirban U. P.	
89	Hari Kinkar Das (E)	I
90	Sabita Kumar Roy (E)	II
	Kubirpur U. P.	
92	Duksha Haran Ghose	I
93	Aswini Kumar Gorain	I
	Adda U. P.	
95	Profulla Kumar Roy (E)	II
96	Santiram Mondal	II
	Chota Kustikur U. P.	
97	Sekh Abdul Mutalib (E)	II
	Itagoria U. P.	
100	Mahadeb Das (E)	II
101	Chittaranjan Dutta	II
	Suri Hariotganja Maktab.	
102	Sayed Golam Rasul	I
103	Sheik Mahamed Abdur Rejak	II
	Guru Training School, Suri.	
108	Saktipada Kalai (E)	II
109	Sarat Chandra Kahar (E)	I
110	Naresh Chandra Chatterjee (E)	I
111	Mousa Hembran (E)	I
112	Nanda Kumar Pal (E)	I
113	Sudha Kumar Roy (E)	I
114	Manilal Bhattacherjee (E)	I
115	Kali Charan Das (E)	II
	Panditpur P. U.	
117	Joydev Shaha	I
118	Bhutnath Dhibar	I
119	Abdul Khalek Khan	I
120	Majammal Hosen Khan	II
121	Jan Ali Khan	I
122	Kalu Khan	II
123	Jan Alam Khan	II
	Jatra U. P.	
126	Radha Shyam Pal	II
127	Sheik Ali Molla	II
	Kota U. P.	
130	Sambhu Nath Pal	II
131	Srimati Madhabilata Debi	II
	Chinpai Board U. P.	
133	Sudhir Kumar Mitra (E)	I
134	Sheikh Said Rahaman (E)	I
136	Jitendra Lal Majumdar	II

Roll No.	Name.	Division.
	Paisundi U. B. U. P.	
138	Rabindra Nath Chandra (E)	I
139	Phanibhusan Mudi (E)	II
141	Gour Chandra Beet (E)	II
144	Gour Chandra Mondal (E)	II
	Babuijore U. P.	
146	Radha Shyam Sen	II
147	Gurupada Gorain	II
	Batashpur U. P.	
150	Narad Chandra Barui	II
	Lauberia B. J. U. P.	
151	Durgadas De (E)	I
152	Madan Gopal Dhar (E)	I
153	Anil Kumar Dutta	II
155	Shyamapada Dutta	II
157	Sreedhar Nath Ganguli (E)	II
158	Saktipada Sen Gupta (E)	II
	Hazratpur U. P.	
159	Subal Chandra Chowdhury (E)	II
160	Umapada Santra (E)	II
161	Gurupada De (E)	II
163	Kalipada Acherjee (E)	II
164	Satya Narayan Bag (E)	II
165	Kamala Kanta Das (E)	II
167	Ram Prosanna Ray (E)	II
	Rasa U. P.	
168	Ratneswar Ghose (E)	I
169	Krishna Das Datta (E)	II
170	Robindra Nath Chatterjee (E)	II
173	Balaram Chakravarty (E)	II
	Khoyrasol U. P.	
175	Provakar Choudhury (E)	I
176	Nirupama Sarkar (E)	I
	Lokepur P. U. U. P.	
177	Bholanath Panda (E)	I
178	Benukar Mahata (E)	I
179	Gurupada Dutta (E)	I
181	Achyutananda Mukherjee (E)	II
	Rampurhat Centre.	
	Dunigram U. P.	
1	Muhammad Abdul Alim (E)	I
2	Dwija Pada Sinha (E)	II
3	Mir Abdur Rajjak (E)	II
4	Md. Moazzem Hossain (E)	II
5	Md. Iasin (E)	II
6	Md. Hayat Uddin (E)	I
	Rampurhat Maktab.	
7	Muhammad Aminuddin (E)	I
8	Md. Abdus Salam (E)	II
	Ekdala Jasahari U. P.	
9	Ijad Ali (E)	I
10	Basanta Kumar Dutta (E)	I
11	Md. Gulzer Hossain (E)	II
12	Sheikh Abdul Aziz (E)	II
13	Aswini Kumar Let (E)	II
14	Kalu Sheikh (E)	I
16	Muhammad Ekram Ali	II
	Dadpur P. U.	
17	Golam Ambia (E)	II
18	Md. Jafor Ali (E)	II

Roll No.	Name.	Division.
	Ramdanpur U. P.	
20	Shaikh Joynal Abedin (E)	II
21	Abdul Gani Dewan	II
22	Nakfuri Sheikh	II
23	Faruk Hossain	II
	Serpur U. P.	
24	Sheikh Abdur Rahman (E)	II
25	Sheikh Abdus Sattar (E)	I
27	Sheikh Omar Molla	II
30	Sheikh Abdur Rob	II
	Tentulia U. P.	
32	Ram Chandra Sarkar (E)	II
34	Mahadeb Chandra Sarkar (E)	II
35	Bansi Dhari Sarkar	II
38	Rama Nath Das (E)	II
39	Abhoya Pada Das (E)	II
	Radipur U. P.	
40	Panchanan Mitra (E)	II
42	Bishwa Nath Mandal (E)	II
44	Ganapati Ghosh (E)	II
45	Baidya Nath Mandal (E)	II
46	Aswini Kumar Mandal (E)	II
47	Santipada Roy Chowdhury (E)	II
48	Sufal Chandra Mandal (E)	II
49	Baridbari Mandal (E)	II
	Kaluba U. P.	
50	Satya Narayan Chattoraj	II
52	Banyeswar Chandra Bhattacharyya	II
53	Hara Sankar Chattoraj	II
	Kusumba U. P.	
54	Gangadhar Mukherji (E)	II
55	Panchanan Dutt (E)	I
56	Nani Gopal Pal (E)	II
57	Haradhan Mandal (E)	II
58	Jagajiban Sahana (E)	II
	Joghar P. U.	
59	Sachinandan Goypuri	II
61	Muhammad Salemtulla (E)	II
64	Sekandar Hossain	II
	Kabilpur U. P.	
65	Abdul Zafar (E)	II
66	Sanatan Mandal (E)	II
67	Surja Kanta Mandal (E)	II
68	Syama Pada Mandal (E)	II
69	Balaram Ghosh (E)	II
	Baloon U. P.	
70	Padma Lochan Mandal (E)	I
71	Anil Baran Roy (E)	I
72	Sachidananda Chatterji (E)	II
74	Nalini Mohan Konai	II
	Ekdala Jasahari U. P.	
76	Muhammad Surat Ali (E)	II
	Swadinpur U. P.	
78	Mrityunjoy Mandal, No. 2 (E)	II
79	Jatadhari Mukherji (E)	II
	Joy Krishnapur U. P.	
80	Syed Muhammad Fazle Kader	II
81	Muhammad Naimuddin Sarkar	II
82	Sheikh Akhtar Ali	II
83	Abul Khayer	II
84	Sheikh Serafatullah	II

Roll No.	Name.	Division.
	Rampurhat Free Primary.	
90	Sati Nath Banerji (E)	II
91	Santi Nath Banerji (E)	II
92	Krishna Gopal Chattoraj (E)	I
94	Tripuresh Roy Chowdhury (E)	II
95	Kamalesh Roy Chowdhury (E)	II
97	Radha Ballav Sarkar (E)	II
98	Baidya Nath Pal (E)	II
99	Karuna Sindhu Pal (E)	II
100	Madan Mohan Roy (E)	I
102	Ajit Kumar Dutta (E)	II
103	Kshirod Gopal Saha (E)	II
104	Sachidanandan Das (E)	II
105	Nitya Gopal Das (E)	II
106	Pashupati Mandal (E)	II
107	Gaya Prosad Bhakat (E)	II
108	Radha Govinda Das (E)	II
110	Bijoy Chandra Mandal (E)	II
	Barshal Primary.	
114	Sudhir Kumar Bhattacharyya (E)	I
115	Bansidhar Mukherji (E)	I
116	Kamala Kanta Mukherji (E)	II
117	Shyama Pada Das (E)	I
118	Amarendra Nath Mukherji (E)	I
119	Sisir Kumar Dutta (E)	II
120	Panchanan Mandal (E)	II
121	Manik Chandra Mandal (E)	I
	Dekhunia Primary.	
122	Subal Chandra Mandal (E)	I
123	Raghabendra Kumar Bhattacharyya (E)	II
	Kharbona U. P.	
126	Anil Kumar Mandal (E)	I
127	Gouri Sankar Mukherji (E)	II
129	Muhammad Sakim Sheikh (E)	II
130	Muhammad Hakim Sheikh	II
132	Dulal Chandra Mandal (E)	II
	Harioka P. U.	
135	Bansidhar Mandal	II
137	Surjya Kumar Mandal	II
	District Bankura.	
	Bankura Zilla School Centre.	
	Bankura Central U. P.	
1	Ramdin Karmakar	I
2	Lakshminarayan Nath Jogi	I
3	Radhika Prasad Khan (E)	I
4	Naba Gopal Sen	II
	Bankura East U. P.	
6	Umasankar Das	I
7	Sisir Kumar Sinha	II
	Bankura North U. P.	
10	Mathur Nath Karmakar	II
12	Madan Mohan Karmakar	II
	Bankura Feeder Road U. P.	
14	Mrityunjay Ray (E)	II
16	Durgadas Modak	II
17	Narendra Nath Das	II
	Bankura Pathpur U. P.	
26	Prahlad Chandra Kundu	II
29	Ajit Kumar Atha (E)	II
	Kothardanga U. P.	
30	Sukumar Bid	II
32	Satya Kinkar Chatterjee	II

Roll No.	Name.	Division.
	Bankura Practising U. P.	
33	Jadunandan Banerjee (E)	I
	Sanabandh Board U. P.	
34	Ramratan Mukherjee (E)	II
35	Sasadhar Banerjee (E)	II
36	Bholanath Chatterjee (E)	I
37	Anil Baran Chatterjee	II
38	Gafuruddin Mallik (E)	I
39	Saikh Riajaddi Khan	II
	Kalpathar U. P.	
43	Bhola Nath Chatterjee (E)	I
45	Pravakar Mandal (E)	II
46	Radha Gobinda Bag (E)	I
47	Binode Behari Maji (E)	I
48	Gouranga Sundar Maji (E)	I
49	Madan Mohan Mandal (E)	I
50	Jaladhar Bag (E)	I
	Kumidya U. P.	
51	Arabinda Banerjee (E)	I
52	Hemanta Kumar Banerjee (E)	II
53	Santiram Bag (E)	I
54	Kshudiram Mukherjee	II
55	Sarada Prasad Tantubaya (E)	II
	Purandarpur U. P.	
56	Sudhamay Chattaraj	I
57	Rohiteswar Mukherjee	II
58	Heramba Prasad Sinha	I
59	Nanigopal Sinha	II
60	Gopal Chandra Sutradhar	II
	Mankanali U. P.	
61	Sudhanshu Kumar De	II
62	Dhrubataran Nandi	II
63	Rampada Bhatta	II
64	Sudhir Kumar Banerjee	II
	Nadadihi U. P.	
65	Ajit Kumar Banerjee	II
66	Rangati Ghosh	II
67	Gopal Chandra Das	II
68	Satish Chandra Bauri	II
	Bikna Biss' Free U. P.	
71	Naba Gopal Singha (E)	II
73	Kamala Kanta Garain (E)	II
	Kadmaghati Biss' Free U. P.	
74	Parimal Kumar Banerjee	I
76	Aditya Sekhar Banerjee	II
	Baragram U. P.	
80	Mahadev Chatterji	II
81	Jamini Kanta Chatterji	II
82	Kashi Nath Bhadra	II
84	Saradindu Bhadra	II
	Puara U. P.	
86	Radha Raman Chakravarty	II
	Gunnath U. P.	
88	Ashutosh Chakravarty	II
	Mullickdihi U. P.	
93	Bhuban Mohon Patra	II
94	Krishna Chandra Ghose	II
95	Satish Chandra Pati	I
96	Nakul Chandra Pati	I
	Danga U. P.	
98	Kanailal Kundu	II
99	Sasanka Sekhar Maji	I

Roll No.	Name.	Division.
	Bhatra U. P.	
100	Raghu Pati Konwar (E)	I
101	Manindra Nath Konwar	II
102	Tinkari Banerji	II
103	Lal Mohon Konwar (E)	I
	Tungi U. P.	
104	Sristidhar Ponda	II
107	Nagendra Nath Ponda	I
109	Ananda Mohon Pathak	II
111	Brahmananda Patra	II
112	Bhadra Lal Pati	II
113	Nakul Chandra Patra	II
	Sukhanibas P. U. U. P.	
117	Kishori Mohan Kundu	II
	Palla P. U. U. P.	
120	Bharat Chandra Patra	II
	Karrah U. P.	
122	Bhriguram Kundu (E)	I
123	Hrishikesh Mandal	II
124	Atul Chandra Mandal (E)	I
125	Shambhu Nath Mandal (E)	II
126	Dibakar Ghosal (E)	II
127	Bholanath Ghosal (E)	II
128	Rabilochan Kundu	I
129	Jnanendra Nath Mandal	II
	Kantapahari U. P.	
130	Nagendra Nath Kundu	I
131	Bhajahari Kundu	II
132	Guhiram Khan	I
133	Radhanath Musib	II
134	Shambhu Nath Kundu	II
136	Lakshman Chandra Kundu	II
138	Abanibhusan Kundu	II
	Danmari U. P.	
139	Anil Baran Banerjee	II
	Kaminibodia Bisalakshi U. P.	
147	Haripada Kar (E)	I
148	Jnanendra Nath Kar	I
149	Kalidas Garain (E)	I
	Saldiha U. P.	
151	Sankar Lal Mandi	I
152	Dwijapada Kundu	II
	Metala U. P.	
155	Sudhir Chandra Goswami	I
156	Sahadeb Musib	I
	Chinabari U. P.	
159	Saktipada Kar	II
	Atkuria U. P.	
160	Ramgati Pramanik	II
	Salchura U. P.	
162	Bhajahari Khan	II
	Kenchka Board U. P.	
165	Bijoy Krishna Mukherji	II
166	Saktipada Mandal	I
167	Gobardhan Mondal	II
169	Lal Bihari Pramanik (E)	II
	Rampur Board U. P.	
171	Dibakar Maji	II
172	Basudeb Mandal	II
173	Saktipada Mukherjee	II
	Salroha P. U. U. P.	
174	Bipra Charan Sarkar	II
	Syampur U. P.	
178	Ram Narayan Banerjee	II
179	Anil Baran Banerjee (E)	II
180	Pulin Behari Mukherjee (E)	II
181	Satish Chandra Chatterjee	II
	Pabra U. P.	
183	Guru Gobinda Nayak (E)	I
184	Banka Behari Pramanik (E)	II
185	Haripada Soumandal	II
186	Mahadeb Soumandal (E)	II
	Chandra U. P.	
187	Gangadhar Mandal	I
188	Sridhar Chandra Akhuli	I
189	Biswa Nath Dutta	I

Bankura Collegiate H. E. School Centre.

	Mankhamer Board U. P.	
1	Gopal Chandra Ghosal	II
2	Binode Behari Mukherjee	II
5	Bijoygopal Banerjee	II
	Medinipur P. U. U. P.	
9	Amulyaratan Panja	II
11	Anilbaran Ghosh	II
	Jamjuri Free U. P.	
13	Bhabatosh Layek (E)	I
14	Dukshiram Layek	II
15	Hariprasad Garain (E)	II
	Pratappur Free U. P.	
19	Prahladchandra Mandal	I
20	Bimalakanta Patra	II
21	Dukshitram Ghosh	II
23	Narayanchandra Midda	I
	Mandarboni U. P.	
25	Nanigopal Majumdar	I
	Chhagulia U. P.	
26	Dibakar Choudhuri	I
27	Omkarchandra Pal	I
29	Satyabrata Ghosh (E)	I
	Daldali U. P.	
30	Nabakumar Malgope	I
31	Binodebehari Pal	I
32	Rajendranath Mandal	I
33	Gopalchandra Sanrh	II
34	Tripuracharan Gorain	II
35	Narayanchandra Mandal	II
	Gopalpur Free U. P.	
37	Manikchandra Laha	II
	Churamonipur U. P.	
43	Binodebehari Chatterjee	II
	Ghola Board U. P.	
44	Tirthanath De (E)	I
45	Gobardhan Dutta (E)	I
46	Bhusanchandra Layek	I
47	Sudarsan Somandal	I
48	Sanatan Pal (E)	I
49	Radhanath Santal	I
50	Ramnidhi Mukherjee	II
51	Manimohan Ghosh (E)	I

Roll No.	Name.	Division.
	Taldangra Board U. P.	
53	Prahladchandra Patra ..	I
54	Vaskarchandra Mandal ..	II
55	Haripada Layek ..	I
	Khichka Free U. P.	
58	Saktipada Ghosh ..	I
59	Kalipada Ghosh ..	I
60	Satrughna Pan ..	II
61	Sreemati Kamalabala Pan ..	I
62	Bhabataran De (E) ..	II
63	Guiram Pal ..	II
	Kodma Free U. P.	
64	Chandramohan Saren (E) ..	I
65	Bipadtaran Chakravartti ..	II
66	Bibhutibhusan Pine ..	II
67	Krittibas Satapathi ..	II
68	Prafullakumar Singha Babu ..	I
	Paksara Free U. P.	
70	Sudhirchandra Dutta ..	II
71	Abhiram Ghosh ..	II
72	Rabipada Patra ..	II
	Shyamsundarpur Khalgram U. P.	
74	Shyampada Goswami ..	I
	Satmouli U. P.	
76	Mihirchandra Basuli (E) ..	I
	Bibarda U. P.	
77	Tarini Prasad Ghosh ..	II
78	Gokul Chandra Malla ..	II
80	Bansibadan Mandal ..	II
	Jagatpur U. P.	
82	Fanindra Nath Pal ..	II
83	Kshudiram Mandal ..	I
84	Nirml Chandra Pal ..	II
85	Kshudiram Garain ..	II
	Bhedua U. P.	
88	Haralal Mandal ..	I
89	Rampada Patra ..	I
90	Pasupati Hazra ..	II
	Mahalberia U. P.	
91	Fanindra Nath Ghosh ..	II
92	Sishutosh Ojha ..	II
	Chandkuri U. P.	
93	Kuchilapada Khan ..	I
94	Guiram Khan ..	II
	Kunkrakhondar U. P.	
95	Mahendra Nath Mullick ..	I
96	Niranjan Mullick ..	I
99	Narahari Mullick ..	II
	Benjtabani U. P.	
101	Bhabatosh Ponda ..	II
102	Satya Bhusan Ponda ..	I
103	Haripada Mahata ..	I
	Madaria U. P.	
104	Radha Gobinda Singha ..	I
105	Nitya Gopal Nayak ..	II
106	Kishori Mohan Singha Mahapatra	I
107	Gokul Chandra Kundu ..	II
	Putiadaha U. P.	
108	Bansidhar Misra ..	II
109	Bibhuti Bhusan Misra ..	I

Roll No.	Name.	Division.
	Pukhuria U. P.	
113	Amulya Ratan Roy ..	II
115	Bibhuti Bhusan Ponda ..	I
117	Sasanka Shekhar Patra ..	II
118	Dhananjoy Mahapatra ..	I
119	Rohini Kanta Mahata ..	II
	Parsola U. P.	
120	Kiriti Bhusan Mahanti ..	II
121	Ashutosh Patra ..	II
122	Shyam Sundar Singha Mahapatra ..	II
	Bhedo U. P.	
123	Bibhuti Bhusan Singha Mahapatra ..	II
124	Shyama Charan Singha Mahapatra (E) ..	I
125	Sasanka Shekhar Singha Mahapatra ..	II
126	Jagadish Gan ..	II
127	Narayan Chandra Karmakar ..	II
128	Baladeb Singha Mahapatra ..	I
	Mondalgram U. P.	
132	Nemai Charan Pal ..	II
	Bhutsahar Board U. P.	
135	Pravakar Majhi (E) ..	I
	Suli U. P.	
136	Gopal Chandra Sannigrahi ..	II
137	Radhagobinda Sannigrahi ..	II
	Maidhara U. P.	
139	Jadunath Satpati (E) ..	I
140	Sasanka Sekhar Singha Mahapatra (E) ..	I
141	Sasanka Sekhar Dandapat ..	I
	Balarampur U. P.	
142	Baidya Nath Soren (E) ..	II
143	Joygobinda Dangar ..	II
	Bikrampur Free U. P.	
148	Rajendra Singha Mahapatra ..	II
149	Rampada Satapathi ..	II
150	Bijoy Basanta Roy ..	II
151	Mahadeb Satapathi (E) ..	II
152	Narayan Chandra Mahata ..	II
	Hetegara Free U. P.	
154	Trilochan Singha Mahapatra ..	II

Khatra H. E. School Centre.

	Bonkati U. P.	
1	Bhupati Nath Dhar ..	I
2	Nabakumar Mandal ..	I
3	Tulsi Das Pahari ..	I
4	Amulya Ratan Gorain ..	I
5	Kandarpa Mohon Mahata ..	I
6	Madan Mohon Mahata ..	I
7	Rakhal Chandra Mahata ..	II
8	Gobardhan Mahata ..	II
9	Matilal Mahata ..	II
10	Lakshmi Kanta Sardar ..	II
	Gorabari U. P.	
11	Sanatan Sahu ..	II
12	Ramapati Sahu ..	II
13	Amulya Ratan Sahu ..	II

Roll No.	Name.	Division.
	Mosera U. P.	
15	Ram Ratan Mukherji	I
16	Bhujanga Bhusan Banerji (E)	I
17	Chaitanya Charan Roy	I
18	Bhaja Hari Roy	I
19	Purna Chandra Roy	I
20	Sudhir Kumar Mukherji	II
21	Babu Lal Mandi	I
22	Chaitanya Chandra Roy	II
25	Mahadev Banerji (E)	I
26	Sasadhar Banerji (E)	II
	Balardi U. P.	
28	Basanta Kumar Bagli	II
	Kankradara U. P.	
30	Jitendra Nath Murmu	II
31	Loosai Hembram	II
33	Pravakar Sen Gupta	II
34	Hanri Ram Mahata	II
35	Guru Sadoy Gupta (E)	II
	Dhwajamanipur U. P.	
36	Prafulla Kumar Ponda	I
37	Bibhuti Bhusan Roy (E)	I
38	Triguna Charan Chauni	I
39	Fakir Chandra Chauni	II
40	Sashi Bhusan Roy	I
	Kankata U. P.	
41	Chandra Mohon Ghose	I
42	Aditya Nath Patra	I
43	Phela Ram Chaudhury	I
44	Madan Mohon Patra	I
	Jhorekocha U. P.	
45	Madhu Sudan Mandal	II
46	Jagadish Chandra Mandal	II
47	Sripaticharan Mandal	I
48	Guiram Das	II
	Bonbedya U. P.	
49	Dukshabhanjan Ghose	I
	Ghaskola P. U. U. P.	
51	Gopal Chandra Mukherjee	II
52	Ramranjan Mahapatra (E)	I
53	Sudhakrishna Sen Gupta (E)	II
54	Bibhutibhusan Chakravarti (E)	II
55	Sailendranath Chaudhuri	II
56	Adityamohan Banerjee	II
	Masanjhar Santhal U. P.	
58	Nagendranath Murmu	II
60	Madanmohan Patra	II
	Kosia U. P.	
62	Chandrasekhar Patra	I
63	Ahibhusan Patra	II
64	Kiritibhusan Patra (E)	I
65	Ramgopal Pati (E)	I
66	Phanindrabhusan Patra	II
67	Dharanidhar Patra	II
68	Bibhuti Bhusan Misra	II
69	Kamala Kanta Patra	II
	Haludkanali Board U. P.	
70	Sukdeb Mandi (E)	I
71	Sarada Prasad Mondal (E)	I
72	Upendra Nath Mahata	I
73	Ashutosh Mahata	II
	Krishnanagar P. U. U. P.	
74	Subal Chandra Dutta	I
75	Mahadeb Mahata	II

Roll No.	Name.	Division.
	Rajakata U. P.	
76	Gourchandra De (E)	I
77	Gobardhan Mahata	II
	Talgora U. P.	
78	Pathar Soren	II
79	Keshab Chandra Hembram	II
81	Haripada Mahata	II
	Ghagra U. P.	
82	Bhutnath Mondal	II
	Benakocha Mission U. P.	
83	Surendra Nath Hembram	II
	Sarenga Board U. P.	
87	Parbati Charan Mondal (E)	I
88	Amulya Ratan Dutta (E)	I
89	Jotindra Nath Kumbhakar (E)	II
90	Adhirchandra Bera	II
	Pairaguri Mission U. P.	
93	Banamali Mahata	I
94	Kiriti Kinkar Mahata	I
96	Bibhuti Bhusan Mahata	II
97	Lalbehari Mahata	II
	Debagram U. P.	
98	Debendra Nath Mondal (E)	II
	Khaluimurah Board U. P.	
102	Nalinakshya Sangiri	I
103	Rampada Ponda	I
	Dheko U. P.	
104	Subhas Chandra Chowdhury (E)	I
109	Gour Chandra Chowdhury	II
	Lurka U. P.	
111	Bagala Charan Chatterjee (E)	II
112	Gobardhan Banerjee (E)	II
	Penchakola U. P.	
114	Annada Prasad Sannigrahi	I
	Krisnapur U. P.	
117	Pramatha Nath Panda	I
118	Anil Baran Tripathi (E)	I
119	Madan Mohan Mahata	I
120	Shyama Charan Mahata	II
121	Ratan Chandra Dutta	II
	Botha U. P.	
124	Kalachand Soren	II
	Moulasole Board U. P.	
126	Bijoy Chandra Mondal	II
127	Niranjan Akhuli	II
129	Abanikanta Mondal	II
	Chingra U. P.	
131	Bimalakanta Kundu	I
132	Fateram Soren	I
133	Baidyanath De (E)	I
134	Bahadur Hembram	II

Roll No.	Name.	Division.
	Mondalkuli U. P.	
135	Mahendra Nath Mondal	I
136	Satish Chandra De	I
137	Harekrishna Modak	II
138	Fani Bhusan Das Gupta	II
139	Tarapada Bhattacharyya	I
140	Probodh Chandra Nandi	II
	Maara Mission Santal U. P.	
143	Purna Chandra Soren	II

Maliara H. E. School Centre.

	Kaniamari Board U. P.	
1	Gora Chand Nandy	II
2	Abani Kumar Banerjee	I
	Beharjuria U. P.	
9	Narayan Chandra Ghosal	II
10	Karali Pada Roy	II
	Bisinda U. P.	
11	Kshirode Baran Mukherjee	I
	Kapista U. P.	
12	Ashutosh Chakravarty	II
	Pindrabani U. P.	
17	Dhrubapada Paul	I
	Sankarara U. P.	
22	Ananda Mohan Mandal	I
23	Anil Baran Banerjee	II
	Ban Ashuria U. P.	
24	Amar Sankar Mandal	I
25	Chittaranjan Nayak	II
26	Dibakar Acharjee	I
	Nityanandapur U. P.	
28	Haridas Roy (E)	I
29	Sarat Chandra Banerjee (E)	I
30	Fani Bhusan Chatterjee (E)	II
31	Manasa Ram Kundu (E)	I
32	Amulya Ratan Pramanik (E)	I
33	Tarasankar Banerjee (E)	I
34	Prahlad Chandra Mandal (E)	I
35	Madhusudan Banerjee (E)	I
	Metala U. P.	
36	Bholanath Sinha (E)	I
37	Nrisinha Prosad Sinha	I
38	Kanailal Sinha (E)	I
39	Bejoy Kumar Banerjee (E)	II
41	Bala Ram Goswami	II
	Jalanpur U. P.	
42	Prafulla Kumar Pandey	I
43	Sasanka Sekhar Misra	II
	Bhara U. P.	
46	Narayan Chandra Banerjee (E)	I
47	Kripa Narayan Mukherjee (E)	II
	Benabaid U. P.	
48	Krishnapada Tewari	I
49	Durga Das Mandal	II
	Syampur Board U. P.	
50	Ahi Bhusan Mukherjee (E)	I
51	Deba Durlav Mukherjee (E)	II

Roll No.	Name.	Division.
	Pyarasole U. P.	
52	Asutosh Maji	II
	Kansara U. P.	
58	Anil Baran Mandal	I
59	Rabi Lochan Hazra	II
60	Kamala Kanta Somandal	I
61	Kalipada Sutradhar	II
62	Rakha Hari Somandal	II
	Matali Board U. P.	
63	Anil Chandra Mukherjee	II
	Monohar U. P.	
64	Arabinda Khan (E)	I
65	Amarendra Nath Khan (E)	I
66	Gour Chandra Mandal	II
67	Balaram Mandal	II
68	Haripada Maji	II
69	Chittaranjan Mandal (E)	I
70	Hare Krishna Mandal	II
71	Madhusudan Maji	II
72	Tribhanga Murari Khan (E)	I
73	Tribhanga Murari Mandal (E)	II
74	Bidyapati Sen (E)	II
75	Sukhamoy Sen (E)	II
76	Lal Mohon Pal (E)	II
	Ghuntgaria U. P.	
77	Ahibhusan Mohatur	II
	Bramhandiha U. P.	
79	Sudhir Chandra Pal	II
80	Sambhunath Kumbhakar	II
	Pakhanna U. P.	
81	Saktipada Chakraborty (E)	II
82	Gour Hari Choudhury (E)	II
	Chandai U. P.	
86	Muhammad Abed Ali Mallick (E)	II
	Belut Free U. P.	
88	Anilbaran Roy (E)	II
89	Nirmalaksha Roy (E)	I
90	Basudeb Bhattacharjee (E)	I
92	Dulal Chandra Zemindar (E)	II

Vishnupur H. E. School Centre.

	Bishnupur Practising U. P.	
2	Bijay Krishna Das	II
	Bishnupur East U. P.	
4	Nepal Chandra Khan	II
7	Bibhuti Bhusan De	II
12	Sujay Chandra Ghosh	I
13	Pashupati Dhibar (E)	I
	Marui Bazar Gostha Behari U. P.	
17	Rabi Kinkar Mandal	I
18	Gorachand Saha	I
19	Renupada Mandal Dhibar	I
20	Aswini Kumar Das Gupta	I
22	Sibdas Karmakar	II
23	Kinkar Chandra Saha	II
	Bailapara U. P.	
26	Gouripada De	I
	Gossainpur U. P.	
28	Satish Chandra Pal	II

Roll No.	Name.	Division.
	Lokhasole U. P.	
29	Patitpaban Chowdhuri ..	II
	Joykrishnapur U. P.	
31	Ram Kinkar Chatterjee ..	II
32	Gopal Chandra Bhattacharjee ..	II
33	Kirity Bhusan Pal ..	II
34	Gobardhan Roy ..	II
	Radhanagar U. P.	
38	Durga Prasad De ..	II
	Janta U. P.	
41	Mrityunjay Datta ..	II
	Belsulia U. P.	
42	Kshetra Mohan Lag ..	I
	Galia U. P.	
46	Kalipada Nandi (E) ..	I
	Maynapur U. P.	
50	Mati Lal Datta (E) ..	II
	Gogra U. P.	
53	Kalipada Kundu ..	I
54	Subal Chandra Nemo ..	II
	Madanmohanpur U. P.	
55	Jagabandhu Pal ..	II
56	Sakti Pada De ..	II
	Bagdoba U. P.	
57	Bholanath Kundu ..	I
58	Gouranga Maji ..	I
	Sihas Board U. P.	
59	Satchida Nanda Mandal ..	I
60	Bhairab Chandra Mandal ..	I
61	Bhabataran Chakrabati ..	I
	Chakra-Kankabati U. P.	
63	Kalipada Khan ..	I
64	Ajit Kumar Some ..	I
	Sonamukhi H. E. School Centre.	
	Sonamukhi Practising U. P.	
1	Bankim Chandra Bit ..	I
2	Sarat Kumar Kit ..	II
3	Ram Krishna Chakrabarty ..	II
	Sonamukhi-Shyambazar U. P.	
4	Gopal Chandra Guin ..	I
5	Chinmay Dhan ..	I
6	Narendra Nath Pal ..	I
7	Kisori Mohan Biswas ..	I
8	Sudhir Kumar Guin ..	I
9	Chittaranjan Pal ..	I
11	Seikh Kasim ..	II
12	Ajit Kumar Ghar ..	I
	Sonamukhi West U. P.	
13	Karunamay Karmakar ..	I
14	Gopal Chandra Chandra ..	I
15	Aditya Prasad Dutta ..	II
	Ruppat-Patra Hati U. P.	
17	Panchanan Pal ..	I

Roll No.	Name.	Division.
	Manikbazar U. P.	
20	Pradyot Kumar Roy ..	I
21	Aswini Kumar Roy ..	II
22	Manik Chandra Roy ..	I
	Kachdihi U. P.	
24	Narain Chandra Pal ..	II
	Dhulai-Sahapur U. P.	
26	Susil Kumar Chatterjee ..	II
	Radhamohanpur U. P.	
28	Raksha Charan Banerjee ..	II
	Rangamati U. P.	
30	Haribhajan Chatterjee (E) ..	II
31	Trilochan Chatterjee ..	II
32	Kuraram Laha (E) ..	I
33	Amar Sankar Nath ..	I
	Telisayer Board U. P.	
34	Krishnadas Sen Gupta ..	II
36	Nagendra Nath Bag ..	II
37	Jankinath Bairagi ..	II
	Pantit P. U. U. P.	
39	Manoranjan Karak ..	II
40	Ram Sankar Karak ..	II
	Krisnanagar U. P.	
42	Karunamay Sinha ..	II
43	Saktipada Sutradhar ..	I
	Patrasayer Biss' Free U. P.	
45	Phakir Chandra Hazra ..	II
	Kusadwip U. P.	
47	Bankim Chandra Dey ..	I
	Karisunda Board U. P.	
48	Krisna Mohan Chatterjee ..	II
	Nunduru U. P.	
49	Krisnapada Nandy ..	I
50	Nirapada Kundu ..	I
51	Ananta Prosad Paramanik ..	II
	Bhagabanbati U. P.	
52	Durgapada Batabyal ..	I
53	Dhruba Charan Pal ..	I
54	Mahimaranjan Pal ..	I
55	Kshudiram Pal ..	I
	Ratra U. P.	
57	Basanta Kumar Dey ..	II
	Behar U. P.	
59	Kalipada Ghosh ..	I
61	Sufal Chandra Ghosh ..	I
	Meral U. P.	
62	Durgapada Maji ..	I
63	Susil Kumar Banerjee ..	II
64	Durgapada Dey ..	II

Roll No.	Name.	Division.
	District Hooghly.	
	Hooghly Branch School Centre.	
	Talandoo-Malipara U. P.	
1	Surja Narayan Chatterjee (E)	I
3	Sasadhar Kumar Ghosh (E)	I
4	Damodar Ghosh (E)	II
5	Krishna Dhan Chatterjee (E)	I
	Hooghly Barodwari U. P.	
6	Bolai Lal Sil (E)	I
7	Ajoy Krishna Modak (E)	II
8	Tara Pada Dutta (E)	II
9	Samarendra Deb Modak (E)	I
10	Kali Charan Bandyopadhyaya (E)	II
11	Ganesh Chandra Dutta (E)	II
12	Sailendra Nath Das (E)	I
13	Sukumar Sil (E)	II
14	Syed Ebue Ayub Abu Sattar (E)	I
	Harit U. P.	
18	Krishna Chandra Das (E)	I
	Boai Board U. P.	
19	Mukti Pada Chakravarty (E)	I
	Hoerah U. P.	
21	Sachi Kanta Mukherjee (E)	I
22	Krishna Chandra Sarkar (E)	I
	Sugandhya U. P.	
23	Kartick Chandra Das (E)	II
25	Asit Kumar Basu Roy (E)	II
26	Rajendra Nath Dhara	II
27	Sanat Kumar Malik (E)	II
28	Narayan Chandra Basu Roy (E)	II
	Makalpur U. P.	
30	Hemanta Kumar Tribedi	II
	Khori U. P. Maktab.	
31	A. Hamid Mandal (E)	I
	Digsui U. P.	
34	Sk. Abdur Rashid (E)	I
35	Panchu Gopal Ghosh (E)	II
36	Khudiram Sarkar (E)	II
	Mallikbati U. P.	
37	Satyendra Nath Mallik (E)	II
38	Biswa Nath Dhar (E)	II
39	Paramesh Chandra De (E)	I
40	Biswa Nath Mallik (E)	II
41	Adwaita Kumar Dhar (E)	II
42	Rathindra Nath De (E)	II
43	Sakti Kumar Mallik (E)	II
44	Kshetra Mohan De (E)	II
45	Paritosh Kumar De (E)	II
46	Mati Lal De (E)	II
	Debanandapur U. P.	
47	Ajoy Kumar Basu Roy (E)	I
48	Haradhan Chakravarty (E)	I
50	Tarapada Ghosh (E)	II
	Balikukhari U. P. Maktab.	
51	Md. Yusuf Darjee (E)	I
52	Md. Anwara-aman Haldar (E)	I
	Ranagachha U. P.	
53	Subal Chandra Maity	I
	Kataara U. P. Maktab.	
55	Paresh Nath Jana (E)	I
56	Sk. Ulfat Rahaman (E)	II
57	Sk. Osikar Rahaman (E)	II
58	Sk. Rahim Baksh (E)	II
	Fultala U. P. Maktab.	
59	Abdul Karim (E)	II
	Moshra Dubghara U. P.	
60	Razia Begum (E)	I
61	Momtaz Begum (E)	I
62	Achina Khatoon (E)	I
63	Aziha Khatoon (E)	II
64	Uma Charan Karmakar (E)	I
	Chak Road U. P.	
65	Dhananjoy Manna	II
68	Kamal Krishna Das	II
	Jnananjan U. P.	
69	Profulla Kumar Chakravarty (E)	I
70	Hare Krishna Dhar (E)	II
71	Biswa Nath Modak (E)	II
	Ghetampur U. P.	
73	Jasimuddin Khan (E)	II
	Hooghly Free Primary.	
74	Satya Charan Patra (E)	I
75	Balai Chand Karmakar (E)	I
76	Hara Kinkar Dutta (E)	II
77	Profulla Chandra Kundu (E)	I
78	Md. Salimull Khan (E)	II
79	Harlal Kahar (E)	II
80	Dinabandhu Das (E)	II
81	Nader Chand Dutta (E)	II
	Bharatpur U. P.	
85	Sk. Abdur Rahaman	II
	Sunko U. P. Maktab.	
88	Abdul Hakim Mondal	II
	Mirerhat U. P.	
90	Pulin Bihari Saha (E)	I
91	Abani Kumar Dutta (E)	II
92	Lakshmi Narayan Bhattacharjee (E)	II
93	Narayan Chandra Mukherjee	II
94	Quazi Abdur Rauf (E)	II
	Raghunathpur U. P.	
95	Purna Chandra Ghoshal (E)	II
96	Ekkari Charan Pal	II
	Panchpara U. P.	
97	Murari Mohan Goswami (E)	I
99	Rati Kanta Tribedi (E)	II
100	Narayan Chandra Sadhu Khan (E)	II
	Telinipara Victoria Ward F. P.	
101	Shibbalak Prasad Sahani (E)	I
102	Hanuman Shoy (E)	I
103	Hira Lal (E)	I
104	Bhagaban Das Gupta (E)	I
105	Abdul Habibullah Mina (E)	I
106	Ahammad Hossain (E)	II
107	Khatibullah Hossain (E)	II

Roll No.	Name.	Division.
	Telinipara Municipal F. P.	
108	Sambhunath Chatterjee (E)	I
109	Kali Charan Chatterjee (E)	I
110	Umakanta Ghosh (E)	I
111	Jagabandhu Das (E)	I
112	Sankarnath Chatterjee (E)	I
113	Sunit Kumar Mukherjee (E)	II
114	Pares Nath Chatterjee (E)	II
115	Fatik Chandra Mukherjee (E)	II
116	Kesab Chandra Lala (E)	I
117	Haramohan Banerjee (E)	II
118	Bejay Kumar Mandal (E)	I
	Gopalnagar Board U. P.	
119	Mritunjay Mallik (E)	I
120	Tarapada Das	I
	Khalsini U. P.	
121	Panchanan Das (E)	II
122	Sadhir Kumar Paramanik (E)	II
	Altana U. P.	
124	Jasoda Jiban Chakrabarty	II
126	Kalipada Manna (E)	I
	Choragram U. P. Maktab.	
127	Molla Abdul Kasem (E)	I
128	Hazera Khatun (E)	II
129	Abdur Rahim Ostagar (E)	II
	Belun U. P.	
131	Panchanan Karmakar	I
132	Provash Ranjan Ghosh (E)	I
	Pandua Free U. P.	
135	Sk. Habibur Rahaman (E)	I
136	Haradhan Chandra Guin (E)	II
137	Nitai Charan De (E)	I
138	Badal Charan Mallik (E)	II
	Amanmouri U. P.	
140	Kamala Kanta Roy	II
	Nandigram U. P. Maktab.	
142	Md. Osman Gani (E)	I
	Panchgora U. P.	
143	Md. Samser Ali Karikar (E)	I
144	Ram Prasad Kundu (E)	II
	Simlagarh U. P.	
146	Tarakdas Bhattacharjya (E)	I
147	Ramdas Roy Chowdhuri (E)	I
148	Prafulla Kumar Chatterjee (E)	I
	Bhitasin U. P.	
150	Muhammad Islam	II
	Ranagarh U. P. Maktab.	
152	Sk. Abdus Sattar	I
153	Sk. Ashraf Ali (E)	II
155	Kebal Chandra Ghosh (E)	I
	Khirpur U. P.	
161	Kali Charan Khan (E)	II
	Bhuimohan U. P. Maktab.	
163	Umapada Ghosh (E)	I
164	Nityananda Ghosh (E)	II
	Tarajole U. P. Maktab.	
165	Jiban Santal (E)	I
	Kantagore U. P. Maktab.	
169	Sk. Abdus Sattar	I
170	Sk. Abdul Mannan	II
	Chatra H. E. School Centre.	
	Nababpur U. P. Maktab.	
1	Md. Siddique Mallik (E)	I
	Mathurdengi U. P. Maktab.	
3	Shaikh Abdur Rashid Dewar (E)	II
4	Gopalchandra Das (E)	II
	Khorsarai U. P.	
5	Karunamay Kundu	II
6	Sreedam Chandra Kundu	II
7	Krishnakanta Kundu (E)	I
8	Ganeshchandra Kundu (E)	II
9	Dulalchandra Sen (E)	I
10	Madanmohan Sen (E)	I
	Bogumpur Board U.P.	
11	Kartick Chandra Dutta (E)	I
13	Khagendranath Sil (E)	I
14	Gobindalal Pal (E)	I
15	Rabindranath Mukherjee (E)	I
16	Radharaman Banerjee (E)	I
17	Shyamacharan Shome (E)	I
	Janai Training U. P.	
18	Batakrishna Das (E)	I
19	Jiban Krishna Das (E)	I
20	Nripendranath Koley (E)	I
	Champdany Free Primary.	
21	Nilmani Rajak (E)	I
22	Badal Chandra Bhowmick (E)	I
23	Manmatha Kumar Ghosh	II
25	Sarjooprasad Dubey (E)	I
26	Ramprasad Pandey (E)	II
27	Biswanath Pandey	II
28	Shewnath Teli	II
29	Balmukunda Show (E)	II
30	Baldeo Show Teli (E)	I
31	Ramdeo Show (E)	II
32	Lakshmanprasad Belbanshi (E)	II
33	Sahadat Ali (E)	I
34	Abu Bakarmia (E)	I
35	Md. Habibulla (E)	I
36	Hadayatulla Mia (E)	I
37	Mir Muhammad Rafique (E)	I
	Kalachhora Board U. P.	
38	Balai Chandra Purkait (E)	I
39	Jitendranath Koer (E)	I
40	Keshabchandra Das (E)	I
41	Dulal Chandra Das (E)	I
42	Rashbehari Mitra (E)	I
43	Pareshnath Pal (E)	I
	Gangadharpur Free Primray.	
44	Surendranath Singha (E)	I
45	Nandalal Das (E)	I
46	Munindranath Das (E)	I
47	Duryodhan Das (E)	I
48	Nitai Chandra Adak (E)	II
50	Narayan Chandra Majhi	II
51	Manmathanath Santra (E)	I
	Ramanathpur U. P.	
52	Biswanath Das (E)	II
53	Bibhutibhusan Khanra (E)	I
54	Durgapada Pan (E)	II
55	Ajitkumar Banarjee (E)	I

Roll No.	Name.	Division.
	Kanaipur U. P.	
57	Gopal Chandra Chattarjee (E)	I
58	Shailendra Kumar Ghosh (E)	I
59	Harendranath Mandal (E)	I
61	Becharam Das (E)	I
	Kharial Board U. P.	
62	Balai Chandra Ghosh (E)	II
63	Kanailal Ghosh (E)	II
	Akuni Board U. P.	
64	Sufal Chandra Adak (E)	I
71	Molla Shamsuddin Ahmad (E)	II
74	Syed Mahabbat Ali (E)	I
75	Zahiruddin Mallik (E)	I
76	Md. Kibriya Haldar (E)	II
77	Salehunnessa Khatun	I
79	Khondakar Md. Sheriff (E)	II
	Chak Jiara U. P. Maktab.	
81	Jamaluddin (E)	I
82	Shahidul Huque (E)	II
83	Kazi Serajul Islam (E)	I
84	Salahuddin Ahmad (E)	I
85	Khondkar Md. Ariff (E)	I
	Bengihati Board U. P.	
87	Shaikh Alamadra Buksh (E)	I
88	Shaikh Niyamat Ali (E)	I
	Sheoraphuly G. C. Free Primary.	
90	Tinkari Hati (E)	I
91	Sailendranath Dutta (E)	I
92	Gourmohan Ghosh (E)	I
93	Lakshman Chandra Sadhukhan	I
94	Fanindranath Majhi (E)	I
95	Rajani Kanta Das (E)	I
96	Sahadev Jana	II
97	Satyanarayan Adak (E)	I
98	Shaikh Abdul Latiff (E)	I
99	Biswanath Dey (E)	I
100	Nityananda Banerjee (E)	I
	Chatra Free Primary.	
101	Sureswar Choudhury (E)	I
102	Sudhir Kumar Banerjee (E)	I
103	Kartick Chandra Choudhury (E)	II
104	Ramkamal Pal (E)	I
105	Chintamani Pramanik (E)	I
106	Tarak Chandra Pal (E)	II
107	Tarapada Das (E)	I
108	Subal Chandra Pal (E)	I
109	Prakash Chandra Sen Gupta (E)	I
110	Gosthabehari Ghosh (E)	II
	Janai Free Primary.	
111	Krishna Chandra Gury (E)	II
112	Pranvanjan Pan (E)	II
113	Sudhir Kumar Malakar (E)	II
114	Janardan Banerjee (E)	I
115	Gobardhan Mukherjee (E)	I
116	Bishnudas Bhattacharyya (E)	II
	Kumragori U. P.	
117	Narayan Chandra Chakravarty (E)	I
118	Gangadhar Chakravarty (E)	II
	Aiyan U. P.	
120	Shambhu Charan Rakshit	II
	Serampore K. M. Shah F. P.	
121	Hiralal Nag (E)	I
122	Madan Chandra Nag (E)	I
124	Panchanan Nath (E)	II
125	Panchkari Bera	II

Roll No.	Name.	Division.
	Kristarampur U. P.	
126	Nilmani De (E)	II
127	Kamalapati Palita (E)	II
128	Kangali Charan De (E)	II
130	Jiban Krishna Santra (E)	II
132	Tulshi Charan Bhattcharyya (E)	II
135	Gokul Chandra Das (E)	II
	Chhota-Chaughara U. P.	
138	Kartick Chandra Belial	II
	Champsora U. P.	
139	Sadhan Chandra Das (E)	I
	Bhagabatipur U. P.	
140	Lakshmandeb Koley (E)	II
141	Shibnarayan Das	II
143	Shaikh Majid Ali (E)	I
	Benipur U. P.	
144	Mohanlal Mandal (E)	I
145	Prafulla Kumar Samanta (E)	II
	Bhadreswar Free Primary.	
146	Biswanath Das (E)	I
147	Amar Nath Das (E)	I
148	Kartick Chandra Sadhukhan (E)	I
150	Baidyanath Mandal (E)	I
151	Haribhusan Pramanick (E)	II
152	Haridas Khan (E)	II
153	Jatindra Kumar Mandal (E)	I
155	Bijali Mohan Ghosh (E)	I
157	Panchanan Sen (E)	II
158	Dwipnarayan Hazom (E)	II
159	Bishnupada Bhattacharyya (E)	II
160	Amarendranath Banerjee (E)	II
161	Balailal Chatterjee (E)	II
162	Banshidhar Misra (E)	II
163	Hemanta Kumar Mukherjee (E)	I
164	Dhirendra Kumar Mukherjee (E)	I
165	Nirapada Chatterjee (E)	I
166	Ramchandra Mitra (E)	I
167	Samarendra Mitra (E)	I
	Kulakash U. P.	
168	Haradhan Rakshit (E)	II
169	Gourchandra Banerjee (E)	I
	Berhal U. P.	
172	Debprasad Pal (E)	I
173	Satyakinkar Laha (E)	I
174	Shyamapada Basu (E)	II
	Charpur U. P.	
175	Balai Chandra Kumar (E)	I
176	Prafulla Kumar Sinha Roy (E)	II
177	Mahadev Rakshit (E)	II
178	Gopalchandra Banerjee (E)	II
	Lakshmanpur U. P.	
179	Biswanath Mukherjee (E)	I
180	Maniklal Chakravarty (E)	II
181	Sital Chandra Shit (E)	I
182	Kanailal Mal (E)	II
183	Tulshicharan Maji	II
	Charpur U. P.	
185	Satish Chandra Karmakar (E)	II
	Jalapara U. P.	
186	Lakshmi Narayan Jana (E)	I
187	Janaky Mohan De (E)	I

Roll No.	Name.	Division.
	Mahistikri U. P.	
190	Satyendra Narayan Mandal	I
191	Ramchandra Bera	I
192	Khagendra Nath Bera	I
193	Ganesh Chandra Bera	I
194	Satis Chandra Samanta	I
	Jagatnagar Board U. P.	
195	Jitendra Nath Das (E)	I
196	Sudhanya Charan Dutta (E)	I
	Naskarpur U. P.	
197	Banku Vehary Das	I
198	Kanai Lal Ghosh	I
	Chitrasali U. P. Maktab.	
199	Md. Idris Sarker	I
200	Sheikh Jaffar Ahammad	I
201	Pashupati Charan Sinha	I
	Tarakeswar H. E. School Centre.	
	Nalikul Practising U. P.	
1	Sudhir Chandra Patra (E)	I
2	Jiban Krishna Kolley	II
3	Gour Chandra Manna (E)	I
4	Paritos Dhara (E)	I
5	Kartik Chandra Dutta (E)	II
6	Gobardhan Santra (E)	I
7	Bijaykrishna Manna (E)	II
	Baichipata F. P.	
8	Asutosh Pal (E)	I
9	Kalipada Dandapath (E)	I
10	Sarashi Kumar Majhi (E)	I
11	Dasarath Kolley (E)	I
12	Manindra Nath Parui (E)	I
13	Mathura Nath Sow (E)	I
14	Trigundhari Jana (E)	I
	Hakimpur U. P.	
15	Panchanan Das (E)	I
16	Jatindra Nath Kolley	II
17	Kartik Chandra Das (E)	I
18	Hiren Sinha Ray (E)	I
	Bhola U. P.	
19	Khagendranath Das	II
20	Pares Chandra Banduri (E)	II
	Kultikary Board U. P.	
22	Bankim Chandra Mukhopadhya (E)	I
23	Dibakar Bhattacharyya (E)	I
24	Kartik Chandra Mandal (E)	I
	Santoshpur Board U. P.	
25	Hari Lal Sit	II
	Ranabandh U. P.	
26	Banamali Bera	I
27	Krishna Mohan Samanta	I
	Chandur U. P.	
28	Vishnupada Bag (E)	I
29	Kalipada Jana	I
30	Bhupal Krishna Biswas (E)	I
	Nasibpur U. P.	
31	Bholanath Sinha (E)	II
33	Jananendranath Pal	II
34	Biseswarnath Sinha	I
35	Bhadreswar Kolley	I
36	Baidyanath Santra	II
37	Nitai Charan Bangal	II
40	Fanindranath Ray (E)	II

Roll No.	Name.	Division.
	Champadanga U. P.	
42	Panchanan Das	II
43	Durlav Chandra Maity	II
	Nachipur U. P.	
46	Anil Chandra Chakravarty (E)	II
47	Becharam Kundu (E)	I
48	Kenaram Ray (E)	I
	Naita U. P.	
49	Jiban Krishna Dutta (E)	I
51	Sivaram Ray (E)	I
	Ratanpur U. P.	
52	Krishnapada Pramanik (E)	II
53	Tarak Chandra Das	I
54	Viswa Nath Dhara (E)	II
55	Dhananjaya Samanta (E)	II
56	Santos Kumar Das	I
	Ramnagar Board U. P.	
57	Panchugopal Pal (E)	I
58	Nandalal Mandal (E)	I
59	Mahanando Ghosh (E)	II
60	Prokas Chandra Mukherjee (E)	II
61	Satya Charan Sana (E)	II
62	Sankar Prosad Biswas (E)	II
63	Gui Ram Bhattacharyya	II
64	Mahanando Samui (E)	I
	Pahalampur U. P.	
65	Anil Baran Das (E)	I
67	Salil Kumar Ghosh (E)	I
68	Gui Ram Sabui (E)	II
69	Jitendranath Das	I
70	Nilmani Das (E)	I
	Ayema U. P.	
71	Kartick Chandra Majhi (E)	I
72	Ratan Chandra Ghati (E)	I
73	Subal Chandra Ghati (E)	I
74	Krishna Chandra Karmakar (E)	I
75	Tarapada Pramanik (E)	I
76	Kanai Lal Pramanik (E)	I
77	Bhupati Charan Majhi (E)	II
78	Guiram Guchait (E)	I
79	Khetra Mohan Chakravarty (E)	II
	Anantapur U. P. Maktab.	
82	Md. Abu Bakkar Molla (E)	I
83	Kalipada Sarker (E)	I
	B. Bakualla F. U. P.	
84	Ekkari Mallik (E)	I
85	Suphal Chandra Das (E)	I
86	Molla Abdur Rahim (E)	I
87	Jaladhar Ghosh (E)	I
	Majinan Free Primary.	
88	Jyotish Chandra Patra (E)	I
89	Gobinda Chandra Ghosh (E)	I
90	Bijoy Krishna Sinha Roy (E)	I
	Khanpur Board U. P.	
91	Sk. Rabial Hossain (E)	I
92	Bagala Kanta Das (E)	I
94	Madan Mohan Nandi (E)	I
95	Tarapada Dutta (E)	I

Roll No.	Name.	Division.
	Kumrul Free Primary.	
96	Sasthiram Ghatak (E) ..	I
97	Gourhari Ghoshal (E) ..	I
98	Gobinda Chandra Mondal (E) ..	I
99	Ajit Kumar De (E) ..	II
100	Nepal Chandra Patra (E) ..	II
101	Manimohan Chakravarti (E) ..	I
102	Basudeb Sinha Roy (E) ..	I
103	Panchanan Chakravarti (E) ..	II
104	Sasanka Sekhar Sinha Roy (E) ..	II
105	Krishnapada Bera (E) ..	II
	Mandara Board U. P.	
106	Sk. Dilwar Hossain ..	II
107	Sk. Abdul Wahab (E) ..	I
108	Sib Chandra Pal (E) ..	II
	Boso U. P.	
111	Panchanan De (E) ..	II
	Gurbari U. P.	
113	Panchanan Santra ..	II
114	Hemanta Kumar Banerjee ..	II
115	Kalipada Banerjee ..	II
116	Santisudha Ghosh (E) ..	II
	Serampur U. P.	
119	Satish Chandra Das (E) ..	II
120	Gadadhar Adak ..	I
121	Banamali Dhara (E) ..	I
	Haripur U. P.	
122	Sufal Charan Mal ..	II
123	Dhanapati Ghosh (E) ..	II
	Kankrakhuly Board U. P.	
125	Raj Krishna Dhara ..	II
126	Dhirendra Nath Santra (E) ..	II
	Deluara U. P.	
128	Panchanan Modak (E) ..	II
	Parambua U. P.	
129	Bimala Charan Mukherjee (E) ..	II
130	Gobinda Chandra Ghosh (E) ..	II
131	Panchu Gopal Ghosh (E) ..	II
	Daspur U. P.	
134	Gopal Lal Mukherjee (E) ..	I
	Hanral U. P.	
136	Sasadhar Bhttacharyya (E) ..	II
	Kulbatpur Board U. P.	
139	Surjapada Bhowmick (E) ..	I
140	Bhutnath Samanta (E) ..	II
141	Chandi Charan Maity ..	II
	Pershyampur U. P.	
142	Bhutnath Manna ..	I
143	Sarat Chandra Patra ..	I
144	Durgadas Sheet ..	II
	Dasani Gandarpukur U. P.	
145	Gokul Chandra Manna (E) ..	I
146	Lakshmi Narayan Panja (E) ..	I
147	Radha Raman Panja (E) ..	I
148	Gopi Krishna Goswami (E) ..	I
151	Krishna Chandra Pakhira (E) ..	I
152	Radhashyam Bhowmick (E) ..	I
154	Chittaranjan Chakravarti (E) ..	II

Roll No.	Name.	Division.
	Arambagh H. E. School Centre.	
	Jagatpur U. P.	
1	Kalipada Chowdhury ..	I
2	Hari Sadhan Kar ..	I
3	Kena Ram Parai ..	I
5	Ajit Kumar Manna ..	I
6	Sharhanan Chakravarty ..	I
	Marhokhana U. P.	
7	Raghunath Mandal ..	I
8	Subal Chandra Maji ..	I
9	Kishori Mohan Bera ..	I
10	Anil Kumar Santra ..	I
	Kanakpur U. P.	
11	Ram Chandra Jana ..	I
	Kishorepur U. P.	
12	Sashadhar Chakravarty ..	
	Balaichak U. P.	
13	Gui Ram Sasmal (E) ..	I
14	Natib Chandra Samanta (E) ..	I
15	Prasanta Kumar Samanta (E) ..	I
	Radhanagar Asram Vidyapitha.	
16	Krishnapada Kundu (E) ..	I
	Kumarhat Board U. P.	
17	Babu Ram Patra ..	I
	Gaman U. P. Maktab.	
19	Saikh Tahidur Rahman ..	II
20	Saikh Matiar Rahman ..	II
	Ramchandrapur U. P. Maktab.	
21	Saikh Serajul Haque ..	II
	Kumarganj U. P.	
23	Kshudiram De ..	I
	Maheshpur U. P.	
25	Kanailal Mukherjee ..	II
	Basantabati U. P.	
26	Anil Kumar De ..	I
27	Bijay Krishna Samanta ..	I
	Puin U. P.	
28	Kalipada Sarkar (E) ..	I
29	Sk. Ohid Mandal ..	II
30	Ram Krishna Ghosh (E) ..	II
	Tiral Board U. P.	
32	Bibhuti Bhusan Panja ..	II
33	Prafulla Kumar Ghosh ..	II
	Parabagnan U. P.	
34	Bejoy Kumar Adhikari ..	II
	Baherasole U. P. Maktab.	
36	Sk. Showkat Ali ..	I
	Golepur U. P.	
37	Gourchandra Mandal ..	II
	Kumudsia U. P.	
38	Sahadev Chandra Ray ..	I
39	Mahadev Chandra Ray ..	I
40	Govinda Lal Sarkar ..	I

Roll No.	Name.	Division.
	Bhalia U. P.	
42	Sadhan Chandra Sarkar (E) ..	I
	Daharkundu U. P.	
44	Durlav Chandra Hazra ..	I
45	Bejoy Chandra Samanta ..	I
46	Jugal Chandra Bhuina ..	I
	Sasthipur U. P.	
47	Haripada Biswas ..	II
	Parul U. P.	
49	Khelaram Basu ..	I
	Brindabanpur U. P.	
51	Bibhutibhusan Pan ..	I
52	Sm. Kalikabala Dasi ..	II
	Pukhuria U. P.	
53	Radhanath Ghosh ..	I
54	Bankim Chandra De ..	I
55	Bishwanath Banerjee ..	I
56	Durgapada Das Ghosh ..	I
57	Rabilochan Ray ..	I
	Bhurkunda Board U. P.	
58	Gopalchandra Ray ..	I
59	Ajit Kumar Ray ..	I
60	Anjan Kumar Ghosh ..	I
	Rangtakhali U. P.	
61	Mukundaram Pakhira ..	I
62	Satyendranath Kundu ..	I
63	Durlav Chandra Ray ..	I
	Garhmandram U. P.	
64	Md. Komral Alam ..	I
65	Abdul Kader ..	I
	Gopalbati Board U. P.	
66	Bholanath De ..	I
67	Lakshmikanta De ..	I
68	Chandra Kanta De ..	I
	Yeadpur U. P.	
70	Madan Mohan Gupta ..	I
	Debkhanda U. P.	
71	Kishan Chandra Hazra ..	I
72	Panchkari Kar ..	II
	Bolundi U. P.	
75	Bhaktadas Kundu ..	II
76	Kalipada Kundu ..	II
77	Sk. Nurul Islam ..	II
78	Indrabhusan Pal ..	II
81	Bishwanath Mukherjee ..	II
82	Sk. Khoda Baksha ..	II
	District Howrah.	
	Howrah Zilla School Centre.	
	Parbatipur U. P.	
5	Ranjit Kumar Mukherjee (E) ..	II
6	Giridhar Chowdhury (E) ..	II
7	Tinkari Kandar (E) ..	I
	Baltikri Muktaram De U. P.	
8	Tulshi Charan Banerjee (E) ..	I
9	Tinkori Naskar (E) ..	II

Roll No.	Name.	Division.
	Dharsa F. U. P.	
10	Satyaranjan Sett (E) ..	II
11	Murari Mohan Chatterjee (E) ..	II
12	Bishnupada Patra (E) ..	II
13	Satish Chandra Khosal (E) ..	II
14	Durga Charan Dhara (E) ..	II
15	Sreemati Tara Sundari Sett (E) ..	II
16	Aliuddin Kazi (E) ..	II
17	Dhruba Narayan Ghosh (E) ..	II
	Kantora U. P.	
18	Haranidhi Manna (E) ..	II
20	Bishwanath Laha (E) ..	II
	Narna-Makardah U. P.	
22	Tara Kumar Chatterjee (E) ..	I
23	Bishwanath Ghosh (E) ..	II
24	Janaki Nath Ghosh (E) ..	II
	Amtala Practising Primary.	
26	Hrishikesh Poli (E) ..	II
27	Fatik Chandra Fadikar (E) ..	II
	Chaitalpara U. P.	
28	Saroj Ranjan Mukherjee (E) ..	I
29	Sachidananda Banerjee (E) ..	II
	Bipranapara U. P.	
30	Eman Baksh Sheikh (E) ..	I
31	Gour Mohan Dutta (E) ..	I
32	Bejoy Krishna Das (E) ..	I
33	Dulal Chandra Saha, II (E) ..	I
34	Tinkori Pal (E) ..	I
35	Becharam Bose (E) ..	I
36	Sibcharan Pramanik (E) ..	I
	Domjur Baruipara U. P.	
37	Duryodhan Ash (E) ..	II
38	Saileshwar Dutta (E) ..	II
	Durgapur Binapani U. P.	
40	Jiban Krishna Ghosh (E) ..	I
41	Gangadhar Mondal (E) ..	II
42	Jatindra Nath Mondal (E) ..	II
43	Monimoy Ghoshal (E) ..	II
44	Ganesh Chandra Pramanik (E) ..	II
45	Paresh Chandra Jana (E) ..	II
46	Sibnarayan Sadhukhan (E) ..	II
	Keshabpur Mollapara U. P.	
48	Abdur Rahim Molla (E) ..	II
49	Moktar Ahmed Molla (E) ..	II
	Baxera Chittaranjan M. F. P.	
50	Abdur Samad Halder (E) ..	I
51	Rati Kanta Nandi (E) ..	I
52	Patit Paban Ghosh (E) ..	I
53	Sheikh Abdul Khaleque (E) ..	I
54	Sitaram Mukherjee (E) ..	II
55	Madhusudan Ghosh (E) ..	I
56	Sheikh Rabiel Haque (E) ..	I
	Munshidanga Board U. P.	
57	Nur Muhammad Sardar (E) ..	I
58	Kangali Charan Das (E) ..	II
60	Guiram Das (E) ..	II
	Salkia M. F. P.	
62	Mahadebprosad Boler (E) ..	I
63	Dulal Chandra Samanta (E) ..	I
64	Jnanendra Nath Das (E) ..	I
65	Sambhu Charan Das (E) ..	II
66	Ajit Kumar Mitra (E) ..	II
67	Kanai Lal Das (E) ..	I

Roll No.	Name.	Division
	Betaitala M. F. P.	
68	Kinkar Prosad Banerjee (E) ..	I
69	Nabin Chandra Ghosh (E) ..	I
70	Bankim Chandra Ghosh (E) ..	I
71	Sitalprosad Das (E) ..	I
72	Banamali Dhara (E) ..	I
73	Paresh Chandra Metia (E) ..	I
74	Ramani Mohan Dhar (E) ..	I
	Naskarpara M. F. P.	
75	Sankar Nath Chatterjee (E) ..	I
76	Sambhu Charan Adak (E) ..	I
77	Madan Lal Jana (E) ..	II
78	Anantahari Jana (E) ..	I
79	Dharendra Nath Dalui (E) ..	I
81	Bechulal Adhikary (E) ..	II
82	Satyendra Nath Bose (E) ..	I
83	Mahadeb Sen Bakshi (E) ..	II
84	Kanai Lal Maity (E) ..	II
85	Bibhuti Bhushan Das ..	II
86	Nandadulal Singha (E) ..	II
87	Sukumar Das (E) ..	II
	Dharanidhar Mallick Sikhalaya.	
89	Kanai Lal Banerjee (E) ..	II
93	Tarapada Mondal (E) ..	II
	Rajaram Das North Bantra M. F. P.	
95	Lalit Mohan Roy (E) ..	II
96	Raghunath Prosad (E) ..	II
97	Banamali Ghosh (E) ..	II
98	Ramdas Banerjee (E) ..	I
	Chakraberia M. F. P.	
99	Gopal Chandra Kundu (E) ..	I
100	Gopinath Kundu (E) ..	I
101	Rashbehari Kundu (E) ..	I
102	Adhir Chandra Das (E) ..	I
103	Balai Lal Das (E) ..	II
104	Satya Charan Dutta (E) ..	II
105	Bhola Nath Dutta (E) ..	II
106	Khagendra Nath Ghosh (E) ..	I
107	Tara Sankar Bhaduri (E) ..	I
108	Bholanath Som (E) ..	I
109	Bishnupada Som (E) ..	I
110	Panchanan Som (E) ..	II
111	Durga Charan Nath (E) ..	I
112	Kartick Chandra Pain (E) ..	II
	Lakshmi Narayan Bidyalaya	
113	Sreemati Indulekha Ghosh (E) ..	II
115	Biswa Nath Chatterjee (E) ..	II
116	Bimalananda Goswami (E) ..	II
117	Arabinda Nath De ..	II
120	Radhabinode Ghosh (E) ..	II
	M. S. Biswas Lane M. F. P.	
123	Amarendra Nath Mitra (E) ..	II
124	Radha Ballav Sarkar (E) ..	II
125	Sudhir Kumar Sarkar (E) ..	II
127	Gopal Lal Mitra (E) ..	II
	Sibpur Shasthitala M. F. P.	
132	Hiralal Ata (E) ..	II
	Fakirbagan Hindi M. F. P.	
134	Muneshwar Dusadh (E) ..	I
135	Ram Sankar Misra (E) ..	I
136	Darsan Chamar (E) ..	I
137	Sitaram Prosad (E) ..	I
	Sree Bazaranj Pathsala.	
138	Rajnarayan Lall (E) ..	II
139	Kanhaiya Lall (E) ..	I
140	Bhagawati Prosad (E) ..	II
	Bellilious Road Hindi.	
141	Musafir Sarma (E) ..	II

Roll No.	Name.	Division.
	Vedic, Sibpur.	
142	Shiwa Prosad Gupta (E) ..	I
143	Gajanand Prosad (E) ..	I
144	Jagadish Singh (E) ..	II
	Sree Krishna Municipal Free Hindi.	
145	Uma Sankar Singh (E) ..	I
146	Bhookhan Das (E) ..	I
147	Shreepal Chowdhury (E) ..	II
	Sree Mahalakshmi Hindi U. P.	
148	Ram Chandra Pandey (E) ..	II
150	Lakshmi Narayan Ram (E) ..	II
	Ramchandrapur Board U. P.	
151	Netai Charan Banerji (E) ..	I
153	Govinda Chandra Sen (E) ..	I
154	Bhupendra Nath Manna (E) ..	I
155	Niranjan Das (E) ..	I
156	Gour Mohan Das (E) ..	I
157	Kanailal Das (E) ..	II
158	Hira Lal Karmakar (E) ..	II
159	Tarapada Pal (E) ..	II
160	Kartic Chandra Patra (E) ..	I
	Fatikgachi Model U. P.	
161	Becharam Koley (E) ..	I
162	Krishnadhan Jana (E) ..	I
163	Anil Kumar Dohi (E) ..	II
164	Anadi Kumar Dohi (E) ..	I
165	Satis Chandra Chowdhury (E) ..	I
166	Bishnupada Dohi (E) ..	II
167	Nil Kanta Sasmal (E) ..	II
168	Rakhal Chandra Nath (E) ..	I
	Joynagar Model U. P.	
169	Dasurathi Dey (E) ..	I
171	Pares Chandra Manna (E) ..	I
172	Sudhansu Kumar Kar (E) ..	I
173	Haribilash Ray (E) ..	I
174	Badal Chandra Karmakar (E) ..	I
175	Sufal Chandra Charit (E) ..	I
	Ranihati Lal Mohan Koley F. U. P.	
176	Sailendra Nath Pathak (E) ..	I
177	Sufal Chandra Das (E) ..	I
180	Tarapada Hazra (E) ..	II
181	Dhirendra Nath Barik (E) ..	I
182	Mohammed Taufik Purkait (E) ..	II
	Thanamekna Board U. P.	
183	Mani Bhusan Bhattacharyya (E) ..	I
184	Pankaj Lochan Bhattacharyya (E) ..	I
185	Kali Pado Sarkar (E) ..	I
186	Rakhal Chandra Sardar (E) ..	II
187	Nityananda Naskar (E) ..	II
	Mashilla Sambhu U. P.	
188	Manic Lal Kanrar (E) ..	I
189	Pulin Behari Santra (E) ..	I
190	Monotosh Ray (E) ..	I
191	Sanat Kumer Mukherji (E) ..	II
192	Balakram Bhattacharyya (E) ..	I
	Rajgunj U. P.	
193	Kamalendu Bhattacharyya (E) ..	I
194	Narain Singh (E) ..	I
195	Shamir Kumar Pal (E) ..	II
197	Amulya Charan Adhikary (E) ..	I
198	Gora Chand Adhikary (E) ..	II
199	Sudhir Chandra Bera (E) ..	I
200	Surath Mohan Manna (E) ..	II
201	Kartic Chandra Ray (E) ..	II
202	Balaram Ray (E) ..	II

Roll No.	Name.	Division.
	Manickpur Delta Mill U. P.	
203	Gangaram Sardar (E)	I
204	Syam Sundar Hazra (E)	II
205	Hara Lal Sardar (E)	II
206	Benoy Chandra Purkait (E)	II
207	Ramgarib Das (E)	II
208	Becharam Sardar (E)	I
209	Kanai Lal Sadhu Khan (E)	II
210	Abdur Razzaque Haldar (E)	II
211	Daud Ali Molla (E)	I
	Dhulaguri U. P.	
214	Jotindra Nath Sardar	II
	Devandi U. P.	
216	Govinda Chandra Mondal (E)	I
	Ghola U. P.	
217	Kasinath Mondal (E)	I
218	Dharanidhar Ghosh (E)	II
219	Sankar Nath Mondal (E)	I
	Baneswarpur U. P.	
220	Tarapada Mondal (E)	I
221	Tilak Chandra Chakravorti (E)	I
222	Nepal Chandra De (E)	I
223	Sufal Chandra Pachhal (E)	I
224	Auldas Bhandari (E)	I
225	Guiram Shau (E)	I
226	Sukdev Chakravorty (E)	I
227	Felaram Pal (E)	I
228	Manmatha Nath Koley (E)	I
229	Dulal Chandra Naskar (E)	I
	Raichak U. P.	
231	Amal Kumar Basu (E)	II
	Balia Ichhapore U. P.	
234	Lalit Mohan Khamrui (E)	II
235	Gopimohan Jana (E)	II
	Ghola U. P.	
236	Jaydev Chatterjee (E)	II
	Rampur U. P.	
239	Sudhir Chandra Manna (E)	II
	Hafez Abdullah Memorail M. F. P. Maktab.	
240	Khalilur Rahman (E)	I
	Tikiapara M. F. P. Maktab.	
241	Md. Ibrahim (E)	I
242	Md. Salim (E)	II
243	Md. Israil (E)	II
244	Shamsuddin (E)	I
245	Mansur Ali (E)	I
	Sibpur Bustee M. F. P. Maktab.	
246	Md. Hanif (E)	I
247	Shamsuddin (E)	II
248	Abdul Hamid (E)	II
249	Serajuddin (E)	II
250	Abdur Rahim (E)	II
251	Abdul Huq (E)	II
253	Nabi Rasul (E)	II
254	Mohiuddin (E)	II
	Chaitalpara Maktab U. P.	
256	Ahmad Hossain (E)	II
	G. T. Rd. North Islamia U. P. Maktab.	
260	Sk. Md. Shamsul Alam (E)	I
262	Sk. Md. Badruddin (E)	I

Roll No.	Name.	Division.
	Darul Yatama Islamia U. P. Maktab.	
266	Subhan Gani (E)	II
267	Abdus Sattar (E)	I
268	Md. Israil (E)	II
	Mollapara M. F. P. Maktab.	
269	Badiur Rahman Molla (E)	I
270	Akram Hossain Molla (E)	I
	Unsani U. P. Maktab.	
271	Md. Yahia Akond (E)	I
272	Shamsuddin Mullik (E)	I
	Nayabaj U. P. Maktab.	
273	Md. Abul Kasem Khan (E)	I
274	Md. Abdul Gaffar Khan (E)	I
275	Md. Sadeq Ali Mullik (E)	II
	Podra U. P. Maktab.	
276	Azizur Rahman Halder (E)	II
278	Ansar Ali Khan (E)	II
279	Manwar Ali Naskar (E)	I
280	Anwar Ali Naskar (E)	II
	Panchpara U. P. Maktab.	
281	Sk. Mohsen Ali (E)	II
282	Sk. Amzad Ali (E)	II
	Eksara U. P. Maktab.	
283	Md. Mansef Ali Mullik (E)	I
284	Md. Delwar Hossain Mullik (E)	II
	Munshidanga U. P. Maktab.	
285	Golam Asfia Sardar (E)	II
	Ghola U.P. Maktab.	
288	Md. Ayyab Ali Mullik (E)	II
289	Md. Ruhul Amin (E)	II
	Baniarah Ahmad Institution.	
291	Yunus Ali Mirde (E)	I
292	Dhan Krishna Ghose (E)	II
	Sastitala M. F. U. P.	
294	Fatik Chandra Patra (E)	II
	Khurut Binapani U. P.	
295	Probodh Kumar Ghose (E)	II
	Uluberia H. E. School Centre.	
	Uluberia subdivision.	
	Latifpur U. P.	
1	Bhabani Prosad Ghose (E)	I
3	Mani Bhusan Sarkar (E)	II
4	Sambhu Nath Sarkar (E)	II
7	Nil Kanta Bera (E)	II
	Fuleswar Mahamaya U. P.	
8	Basanta Kumar Datta Noogi (E)	II
9	Chhabirani Basu Mallic (E)	II
	Baniban Model U. P.	
12	Dulal Chandra Pal (E)	I
14	Manic Lal Guchhait (E)	II
15	Bhupendra Nath Manna (E)	II
16	Sanatan Bhuiyan (E)	II

Roll No.	Name.	Division.
	Raghudebpur U. P.	
18	Jogat Bandhu Pandit (E)	II
19	Taibal Hossain (E)	II
	Brindabanpur U. P.	
20	Bhadreswar Bhuiyan (E)	II
21	Kheparam Bag (E)	II
27	Manic Lal Datta (E)	II
30	Jiban Krishna Bhakta (E)	II
	Bahira Model U. P.	
31	Sital Chandra Ger (E)	II
32	Netai Charan Khaura (E)	II
33	Anil Chandra Chakravarty (E)	II
	Dhula Simla U. P.	
35	Bidyut Kumar Banerji (E)	I
36	Annada Charan Das (E)	I
37	Krishna Chandra Das (E)	II
38	Shaikh Rabial Hossain (E)	I
39	Basudeb Pakhira (E)	I
	Barberia Board U. P.	
40	Dud Kumar Pramanic	I
41	Santosh Kumar Pramanic	II
42	Santosh Kumar Mondal	II
43	Nalini Kanta Banerji	I
	Vekutal Board U. P.	
45	Nanda Lal Das (E)	II
46	Chittaranjan Haldar (E)	I
	Hatgachha U. P.	
47	Someswar Pramanic (E)	I
48	Raihan Khan (E)	I
50	Shaikh Rabial Huq (E)	II
51	Ramjiban Das (E)	I
52	Bishnupada Das (E)	II
53	Anil Kumar Santra (E)	II
54	Milan Kumar Das (E)	II
55	Govinda Lal Mondal (E)	II
56	Lalit Mohan Mondal (E)	II
57	Jiban Krishna Purkait (E)	II
58	Balaram Patra (E)	II
60	Gourhari Das (E)	II
61	Naba Kumar Khaura (E)	II
62	Sufal Chandra Das (E)	II
	Sadar subdivision.	
	Bolkulai Narayan U. P.	
63	Balaram Chakravarty (E)	I
64	Dhirendra Nath Das (E)	I
	Nuntia U. P.	
65	Radhakanta Guria (E)	I
66	Kalipada Bera (E)	II
	Ghoraghatta U. P.	
69	Rames Chandra Basu (E)	II
	Gunanandapur U. P.	
71	Megh Lal Majhi (E)	I
72	Manmatha Nath Santra (E)	II
73	Jatindra Nath Bera (E)	II
	Mugkalyan U. P.	
74	Kanailal Basu (E)	I
75	Dhananjay Sircar (E)	II
76	Anukul Giri (E)	II
77	Krishna Chandra Patra (E)	I
78	Sheikh Mobarek Hossain (E)	II
79	Anudhaj Pandit (E)	II
	Pipulyan U. P.	
80	Panchanan Samanta (E)	II

Roll No.	Name.	Division.
	Kantapukur Board U. P.	
82	Gunadhar Patra (E)	I
83	Jiban Krishna Mondal	II
84	Manmatha Nath Bag	I
85	Jiban Krishna Pal	II
86	Bhagwan Chandra Sau	II
	Mashiara Board U. P.	
87	Narendra Nath Maity	I
88	Ratan Kumar Mondal	II
	Bagnan F. U. P.	
89	Sheikh Sahadat Ali (E)	II
90	Sukomal Chandra Samaddar (E)	II
91	Sheikh Asfaruddin (E)	II
92	Munshi Ghulam Hossain (E)	II
94	Sudhansu Sekhar Ray (E)	II
95	Amal Kumar Maity (E)	II
	Khalore F. U. P.	
96	Sushil Kumar Sen Gupta (E)	I
97	Rammohan Sinha (E)	II
98	Panchanan Chakravorty (E)	II
99	Rajendra Nath Ghosh (E)	II
	Hijloke F. U. P.	
100	Khagendra Nath Jana (E)	II
101	Bata Krishna Chakravorty (E)	II
102	Muralidhar Chaudhury (E)	II
103	Abani Kanta Chaudhury (E)	II
104	Santosh Kumar Banerjee (E)	II
	Orefuli U. P.	
105	Panchanan Patra (E)	II
106	Bimal Krishna Bhattacharyya (E)	II
	Amrajole U. P.	
108	Ananda Mohan Kundu (E)	II
109	Chittaranjan De (E)	II
111	Sasanka Hazra	II
112	Kishori Mohan Datta (E)	II
113	Shaikh Kaoser Ali (E)	II
114	Satis Chandra Chhati (E)	II
	Birampur U. P.	
115	Tulsi Charan Dolui (E)	II
116	Panchanan Pramanik (E)	II
117	Satis Chandra Panja	II
118	Bankim Chandra Adhicary (E)	II
119	Sital Chandra Panja (E)	II
121	Badal Chandra Paul (E)	II
122	Subal Chandra Gayen (E)	II
	Dipamalita U. P.	
123	Mritunjay Bag (E)	I
	Paikpari U. P.	
125	Gangadhar Jana (E)	I
126	Sahadev Ray (E)	II
127	Balaram Burai (E)	II
	Molla U. P.	
129	Gouri Sankar Khatra (E)	II
130	Nagendra Nath Samanta (E)	II
131	Pulin Chandra Das (E)	II
133	Panchanan Purkait (E)	II
134	Paritosh Kumar Dhara (E)	II
	Gutinagari Hamidiya U. P.	
135	Sree Charan Bhuinya (E)	I
136	Gour Mohan Maity	II
137	Sibu Charan Samanta (E)	II
138	Krishnapada Chakravorty	II
139	Upananda Maity (E)	II
140	Sheikh Hossain Ali	II
141	Ram Krishna Bag (E)	II
142	Dilwar Hossain Nazir (E)	I
143	Gour Mohan Bera	II

Roll No.	Name.	Division.
	Gudarbenia U. P.	
144	Jagadish Chakravorty (E) ..	II
	Nawda Board U. P.	
145	Panchanan Jana (E) ..	I
147	Anil Kumar Das (E) ..	II
148	Purna Chandra Banerjee (E) ..	II
149	Partha Sarathi Samanta (E) ..	II
150	Phelaram Chakravorty (E) ..	II
151	Bhagirath Santra ..	II
	Ramnagar U. P.	
152	Khagendra Nath Das (E) ..	II
153	Jahar Lal Bera (E) ..	I
154	Krishna Chandra Majumdar (E) ..	II
155	Jiban Krishna Chaudhury (E) ..	I
156	Bholanath Samanta (E) ..	I
	Deshantary U. P.	
157	Sasanka Sekhar Jana (E) ..	II
159	Kalipada Samanta (E) ..	II
160	Brindaban Pallay (E) ..	II
161	Gangadhar Samanta (E) ..	II
	Jaynagore U. P.	
162	Anil Chandra Maity (E) ..	I
163	Anil Chandra Dhara (E) ..	II
164	Kanailal Saha (E) ..	I
165	Bholanath Das Bairagi (E) ..	I
	Baradabarh U. P.	
166	Amulya Charan Shee (E) ..	I
167	Anilbaran Maity (E) ..	I
168	Anilbaran Das (E) ..	II
169	Sudhangsu Sekhar Dutt (E) ..	II
170	Bhabani Prosad Chakravartty (E) ..	II
171	Khagendra Nath Shantra (E) ..	II
	Amardah U. P.	
172	Gosthabehary Pal (E) ..	I
173	Dasarathi Patra (E) ..	I
174	Kalipada Patra (E) ..	I
175	Bhupendra Chandra Dwara (E) ..	II
176	Naresh Chandra Patra (E) ..	II
177	Jugal Chandra Panja (E) ..	II
178	Krishnapada Ray (E) ..	II
179	Bhagyadhar Acharya (E) ..	I
	Laskarpur U. P.	
180	Pramatha Nath Hazra (E) ..	I
181	Bhupatibhusan Mondol (E) ..	I
	Bhagwanpur U. P.	
182	Nandu Dulal Naskar (E) ..	I
183	Hrishikesh Jana (E) ..	I
184	Profulla Kumar Jana (E) ..	I
	Paltaberia U. P.	
185	Phelaram Mondol (E) ..	I
186	Asutosh Bera (E) ..	I
187	Gangadhar Santra (E) ..	I
189	Bijay Krishna Khuntua (E) ..	I
191	Tustapada Patra (E) ..	I
192	Kanailal Mondol, I (E) ..	I
193	Satis Chandra Mallik (E) ..	I
194	Kanailal Mondol, II (E) ..	I
195	Lakshman Chandra Dolui (E) ..	I
196	Pares Chandra Manna (E) ..	I
	Kultikari U. P.	
197	Sudarsan Das (E) ..	I
198	Ram Krishna Dhara (E) ..	II
199	Anathbandhu Pramanik (E) ..	I
200	Basanta Kumar Das (E) ..	II
201	Montajali Mallik (E) ..	I
202	Probhas Chandra Koley (E) ..	II
204	Aswini Kumar Pramanik (E) ..	II

Roll No.	Name.	Division.
	Sultanpur U. P.	
206	Narendra Nath Purkait (E) ..	I
208	Kanakprova Pramanik (E) ..	II
209	Haripada Sahu (E) ..	II
	Kotra Board U. P.	
210	Anilbaran Bera (E) ..	I
211	Amulya Charan Santra (E) ..	II
212	Jatindra Nath Majumdar (E) ..	II
213	Anadi Charan Bera (E) ..	II
214	Sudhir Chandra Guria (E) ..	II
215	Nagendra Nath Khanra (E) ..	II
216	Jagannath Bera (E) ..	II
217	Bibhuti Bhusan Samanta (E) ..	II
218	Sudhangsu Sekhar Guria (E) ..	II
	Kharuberia U. P.	
219	Santosh Kumar Ghosh (E) ..	II
220	Mojahar Najir (E) ..	I
	Krishnagar U. P.	
222	Biswanath Mallik (E) ..	II
223	Judhisthir Mallik (E) ..	II
224	Kalipada Garani (E) ..	II
	Chandpur Puturia U. P.	
225	Bishnupada Pramanik (E) ..	I
226	Panchanan Korui (E) ..	II
227	Haro Krishna Pramanik (E) ..	II
228	Bhabendra Nath Das (E) ..	II
229	Gopal Chandra Pramanik (E) ..	II
230	Kisori Mohon Naskar (E) ..	II
231	Krishna Chandra Koyal (E) ..	II
	Pansila U. P.	
232	Nilkamal Mondol (E) ..	I
233	Sheikh Abdul Rashid (E) ..	I
234	Sheikh Mohammad Musa (E) ..	I
236	Kishori Mohon Bera (E) ..	II
238	Asutosh Bera (E) ..	I
	Basudevpur Board U. P.	
239	Satyaban Mondol (E) ..	I
240	Kanailal Halder (E) ..	I
241	Harendra Nath Mondol (E) ..	I
242	Arabinda Banerjee (E) ..	II
243	Sheikh Abu Bakr (E) ..	II
244	Sheikh Habibar Rahaman (E)	II
	Durgapur Durgapada Abdur Rahman U. P.	
245	Abinas Ch. Maity (E) ..	I
246	Rajkumar Sau (E) ..	I
248	Ratan Kanta Jana (E) ..	II
	Joynagore Puralipara U. P.	
250	Tarak Chandra Mallik (E) ..	I
251	Khagendra Nath Ghosh (E) ..	II
252	Jugal Chandra Ghosh (E) ..	II
253	Panchuram Majhi (E) ..	I
	Ichhapur U. P.	
254	Sital Chandra Hati ..	II
255	Jaharlal Parui ..	II
256	Gajendra Nath Pramanik (E) ..	II
	Argori U. P.	
258	Lalita Sundari Devi (E) ..	I
259	Dinabandhu Adak (E) ..	I
260	Kanailal Mondol (E) ..	I
261	Kalipada Adak (E) ..	II
262	Dwigendra Nath Bera (E) ..	I
263	Bhadreswar Das (E) ..	I
264	Sris Kumar Mondol (E) ..	II

Roll No.	Name.	Division.
	Panchsurapara U. P.	
265	Surya Kumar Kar (E)	II
266	Nalinbihary Majhi (E)	I
267	Mohanlal Kapat (E)	I
268	Rajendra Nath Santra (E)	II
269	Dasarath Bera (E)	II
270	Adhir Chandra Pramanik (E)	II
271	Profulla Kumar Biswas (E)	II
	Gorchumuk U. P.	
272	Nirodebaran Manna (E)	II
273	Piyush Kanti Ray (E)	I
	Khajuri Tripura U. P.	
275	Rabindra Nath Harbab (E)	II
276	Santosh Kumar Dhara (E)	II
277	Bhola Nath Ghorui (E)	II
278	Nalini Kanta Jana (E)	I
279	Milan Chandra Chakravarty (E)	II
280	Gunadhar Purkait (E)	II
	Khanpur U. P.	
281	Nalini Mohan Gayen (E)	I
282	Amulya Charan Pramanik (E)	II
283	Baidya Nath Sau (E)	I
284	Sufal Chandra Bhuinya (E)	I
285	Sreepati Charan Pathak (E)	II
	Kalidaha U. P.	
286	Lakshman Chandra Shantia (E)	II
287	Balailal Jana (E)	II
	Pansila Khezuruddin U. P. Maktab.	
288	Sk. Muhammad Ali (E)	II
	Sukakhuti U. P. Maktab.	
291	Mohiuddin (E)	II
292	Banamali Shani (E)	II
	Kashmoli U. P. Maktab.	
293	Sk. Md. Elias (E)	II
	Ranmahal U. P. Maktab.	
294	Sk. Abdul Motleb (E)	II
	Akubhag U. P. Maktab.	
295	Md. Kansar Ali Jamadar (E)	II
	Khajurti U. P. Maktab.	
298	Sk. Sajed Ali (E)	I
300	Sk. Mahabbat Ali (E)	II
	Amta H. E. School Centre.	
	Khardah U. P.	
1	Kanailal Batabyal (E)	I
2	Anil Kumar Hazra (E)	I
3	Srikanta Nath Manna (E)	I
4	Khagendra Nath Paramanik (E)	I
	Maju U. P.	
6	Radhacharan Ghosal (E)	I
7	Kanti Prosad Ghosal (E)	I
8	Balaram Bilooi (E)	II
9	Devipada Mukherjee (E)	II
	Pancharool U. P.	
10	Tincowri Hazra (E)	I
	Puras U. P.	
14	Baidyanath Pal (E)	I
16	Parbati Charan Senapati (E)	I

Roll No.	Name.	Division.
	Thalia U. P.	
17	Sudhakrishna Banerjee (E)	I
18	Manindra Nath Hazra (E)	I
19	Anil Chandra Hazra (E)	II
20	Joykrishna Banerjee (E)	I
	Saoria U. P.	
21	Kartik Chandra Dwari	II
22	Sudarsan Ghora	II
	Dhurkhali U. P.	
23	Krishnapada Mondal (E)	I
24	Dulal Chand Maji (E)	II
26	Sufal Chandra Patra (E)	I
27	Luxman Chandra Kanrar (E)	II
	Ranapara Model U. P.	
28	Bishnupada Maity (E)	I
29	Sambhunath Samanta (E)	I
30	Satya Charan Dhawa (E)	I
31	Banamali Dhawa (E)	I
	Kumirmora U. P.	
32	Rampada Das (E)	I
	Kasmoli U. P.	
33	Judhisthir Mondal (E)	II
34	Subal Chandra Mondal (E)	II
35	Satish Chandra Bhunia (E)	II
	Rajapur U. P.	
36	Bhajahari Roy (E)	I
37	Anil Chandra Dutt (E)	I
	Mansingpur Sibtollah U. P.	
39	Debendra Nath Mal (E)	I
40	Astabihari Mal (E)	II
	Hantal U. P.	
41	Balai Charan Kar (E)	I
42	Paresh Chandra Manna (E)	I
	Kurit U. P.	
44	Paresh Chandra Taki (E)	I
45	Janaki Nath Dwari (E)	II
47	Haradhone Bag (E)	II
49	Golam Sahid Khan (E)	II
	Chhota Mohara Board U. P.	
56	Jibon Krishna Bhanja (E)	II
57	Luxman Chandra Barui (E)	II
58	Joydeb Patra (E)	II
59	Ranajit Manna (E)	II
60	Nimai Chand Sarkar (E)	II
	Khosalpur U. P.	
61	Balai Charan Porel (E)	II
62	Samarendra Bhattacharyya (E)	II
63	Panchanan Bag (E)	II
64	Lalit Mohan Chongdar (E)	I
65	Monimohan Chakravorty (E)	II
66	Mrityunjoy Chongdar (E)	I
68	Balai Charan Senapati (E)	I
69	Gurupada Chakravorty (E)	I
70	Baidyanath Koley (E)	I
	Bara Mohara U. P.	
71	Sahadeb Hazra (E)	I
72	Pulin Behari Manna (E)	II
73	Murari Mohan Hazra (E)	I
74	Monmohan Hazra (E)	II
75	Krishnapada Ghosh (E)	II
76	Utthanpada Maji (E)	I
77	Balai Lal Khara (E)	I
78	Sankar Chandra Manna (E)	II
79	Bata Krishna Maji (E)	II
80	Kanailal Manna (E)	I

Roll No.	Name.	Division.
	Chattakhali U. P.	
81	Ram Chandra Khara (E)	II
82	Bata Krishna Deyasi (E)	I
83	Astam Chandra Pachhal (E)	II
84	Jibon Krishna Dhara (E)	I
85	Bhagyadhor Sarkar (E)	I
86	Jibon Krishna Manna (E)	I
87	Prafulla Kumar Sadhu Khan (E)	II
	Mato U. P.	
88	Uma Sankar Ganguly (E)	I
89	Ratan Chandra Roy (E)	I
90	Profulla Kumar Chakravorty (E)	I
	Nawapara U. P.	
91	Nimai Chandra Aush (E)	I
92	Fanindra Nath Giri (E)	II
93	Amulya Charan Aush (E)	I
94	Kobad Ali Khan (E)	I
95	Bharat Chandra Bag (E)	I
96	Jibon Chandra Aush (E)	II
97	Chaitanya Chakravorty (E)	II
98	Felaram Pal (E)	II
99	Basudeb Khara (E)	I
100	Tulsi Charan Galui (E)	II
	Nijbelia Board U. P.	
102	Satish Chandra Dalui (E)	I
103	Sureswar Bhattacharyya (E)	II
104	Provash Chandra Dalui (E)	I
	Somenath Model U. P.	
107	Bamapada Mayoor (E)	I
108	Jagannath Patra (E)	I
109	Harendra Nath Gayen (E)	I
110	Sishupati Deyashi (E)	I
111	Tincowri Das (E)	II
112	Bhagyadhor Shau (E)	II
	Joypur Joychanditollah U. P.	
113	Nimai Charan Hazra (E)	I
	Manasri Board U. P.	
114	Tarapada Chakravarty (E)	II
115	Syam Sundor Chakravarty (E)	I
116	Bhabataran Gayen (E)	I
117	Surendra Nath Bag (E)	II
118	Joy Gopal Bag (E)	I
119	Sannyasi Charan Khara (E)	I
120	Sahadeb Bag (E)	I
	Islampur Board U. P.	
121	Joydeb Metia (E)	I
122	Baburam Metia (E)	I
123	Bijoy Kumar Saha (E)	I
124	Gourhari Chattorji (E)	I
125	Moni Mohan Chatterji (E)	I
	Harope Model U. P.	
128	Kishan Chandra Pramanik (E)	II
140	Pratap Chandra Poria (E)	II
	Chakur U. P.	
144	Tripuradhar Manna (E)	II
147	Rupnarayan Samanta (E)	II
148	Kishori Mohan Chongdar (E)	II

District Midnapore.

Midnapore Hardinge M. E. School Centre.

Roll No.	Name.	Division.
	Pasang U. P.	
1	Bhuban Chandra Jana	II
2	Kanai Lal Mandal	I
3	Gourhari Ghorai	II
	Quai U. P.	
5	Kalipada Ghose	II
6	Sridam Chandra Biswas	II
7	Braja Behary Dolai	II
8	Gobardhan Mukherjee	II
9	Pravash Chandra Tripathi	II
10	Kalidas Mukherjee (E)	I
11	Sankar Kumar Tripathi (E)	II
	Pakuria U. P.	
12	Manmathanath Ghose (E)	I
13	Kalipada Ghose (E)	I
14	Mrigendranath Samanta (E)	I
15	Subal Chandra Ghorai (E)	I
16	Haridas Ghose (E)	II
17	Gourhari Pal	II
	Panigeria Board U. P.	
18	Narayan Chandra Maity	I
19	Tarak Das Samanta	I
20	Nagendranath Ghorai	II
	Panchgeria U. P.	
21	Rampada Patra	II
23	Sudhir Chandra Khamrui	I
	Goalagery U. P.	
24	Benoy Krishna Dey	I
25	Prithwish Chandra Dey	II
	Gopalpunja U. P.	
26	Haripada Das	I
	Bibiganj U. P.	
27	Haripada Tarai (E)	II
28	Lakshmipada Basu (E)	II
29	Saktipada Setna	II
	Midnapore Practising U. P.	
30	Shyam Chandra Singha (E)	I
31	Shaikh Kudratulla (E)	I
32	Shasanka Sekhar Ganguly (E)	I
33	Gour Chandra Das (E)	I
34	Mohammad Fazlul Huque (E)	I
	Mugbasan U. P.	
35	Shaikh Aulad Hossain (E)	I
36	Shaikh Areful Islam	II
37	Hari Prasanna Roy (E)	I
	Malighati U. P.	
38	Pravash Chandra Khaura	II
	Sankua U. P.	
40	Ratinath Dhulia (E)	II
41	Santosh Kumar De (E)	II
42	Mrityunjoy Malakar (E)	II
43	Kedar Nath Ghosh (E)	II
	Chungual-Kandarpur Board U. P.	
44	Bibhutibhusan Mahala (E)	II
45	Saroj Ranjan Pal (E)	I
	Simlageria U. P.	
50	Rahindra Nath Ghorai	II
51	Syamapada Acharjya	II
52	Sk. Based Mallik	II
53	Surendra Nath Manna	II
	Baragorabar U. P.	
54	Bhola Nath Ghosh	II
55	Srimati Bimala Bala Dasi	II

Roll No.	Name.	Division.
	Salua Board U. P.	
56	Sudhir Chandra Mahato ..	II
	Sabra Final Maktab.	
58	Sk. Ahmed Ali (E) ..	I
	Madrassa Ahmedia, Kharagpur.	
60	Abdul Hameed (E) ..	II
61	Syed Peer Ba Ba (E) ..	II
63	Abdul Khalil Khan (E) ..	II
	Azizia Final Maktab, Kharagpur.	
65	Md. Azim Khan (E) ..	II
68	Mohammed Shafee (E) ..	I
71	Pir Mohammed (E) ..	I
74	Abdul Wahid (E) ..	II
	Debra Primary.	
76	Rameswar Jana (E) ..	II
	Belda H. E. School Centre.	
	Baghasti U. P.	
1	Prafulla Kumar Shee (E) ..	I
2	Darsan Chandra Hui (E) ..	I
3	Paresh Chandra Paul (E) ..	I
4	Sasanka Sekhar Patta Nayak (E) ..	I
5	Haripada Das (E) ..	II
7	Priya Nath Mahapatra (E) ..	I
8	Bipin Bihari Palai (E) ..	I
9	Gunadhar Raul (E) ..	II
10	Gopal Chandra Bera (E) ..	II
11	Suhrid Ranjan Maity (E) ..	I
	Gaita U. P.	
12	Anukul Chandra De ..	I
	Khajra U. P.	
13	Krishna Mohan Giri (E) ..	II
14	Amulya Ratan Maity (E) ..	II
15	Jatindra Nath Pandit ..	II
	Sarisha U. P.	
19	Rash Behari Sahoo ..	II
20	Kedar Nath Guria ..	II
21	Subodh Chandra Ray ..	I
	Narayangarh U. P.	
22	Madan Mohan Ray (E) ..	II
23	Tarak Das Bhattacharjee (E) ..	II
	Dangarpara Board U. P.	
24	Narendra Nath Jana ..	II
	Tarua U. P.	
26	Iswar Chandra Ray ..	II
27	Kartik Chandra Barik ..	II
	Santrapur U. P.	
28	Srikanta Bhunia (E) ..	II
29	Birendra Kumar Saw (E) ..	II
30	Dinabandhu Bera ..	II
	Gopinathpur U. P.	
33	Nalini Kanta Jana ..	II
34	Pitambar Das ..	I
35	Bipin Behari Giri ..	II
36	Gadadhar Maity ..	II
	Duria U. P.	
37	Narendra Nath Bera (E) ..	I
38	Gauranga Charan Middya (E) ..	I

Roll No.	Name.	Division.
	Sargeria U. P.	
39	Radha Gobinda Adhikari ..	I
40	Pulin Behari Jana ..	II
41	Gauri Sankar Bhattacharja ..	I
	Sachhipur U. P.	
43	Srimati Basanti Dasi (E) ..	I
44	Rameswar Pal (E) ..	II
45	Gunadhar Jana (E) ..	II
	Mityal U. P.	
47	Ram Chandra Sana ..	II
48	Jogendra Nath Bera ..	II
49	Phani Bhusan Patra ..	II
	Arasini U. P.	
51	Ajit Kumar Chakarvarti (E) ..	II
52	Nafar Chandra Nayek (E) ..	II
53	Sudhir Chandra Mahapatra (E) ..	II
54	Suresh Chandra Mahapatra (E) ..	II
	Bhadrakail U. P.	
55	Bankim Bihari Das Poddar ..	II
56	Panchanan Das Poddar ..	II
	Narma U. P.	
60	Sripati Charan Sen ..	II
61	Kartik Chandra Sing ..	II
62	Niranjan Chakravarti ..	II
	Kushbasuhat Board U. P.	
63	Khagendra Nath Mahapatra (E) ..	I
64	Bhupati Charan Manna (E) ..	I
65	Kedar Nath Sahoo (E) ..	I
66	Madan Gopal Saw (E) ..	II
	Dantunia U. P.	
67	Rajani Kanta Mishra ..	II
68	Nishi Kanta Mishra ..	II
	Mohanpur U. P.	
69	Narayan Chandra Das ..	I
	Jahalda U. P.	
74	Amulyaratan Jana ..	II
	Kantahari U. P.	
76	Hridayananda Das ..	I
77	Jogendra Nath De ..	II
78	Murali Charan Bhadra ..	II
	Amarda U. P.	
79	Sudhansu Sekhar Nanda ..	II
80	Amulya Nath Patra (E) ..	I
81	Sarat Chandra De (E) ..	II
82	Bidyadhar De (E) ..	II
83	Bhupendra Nath Singha (E) ..	II
	Monkapur U. P.	
84	Anil Kumar Natua ..	II
85	Gaur Mohan Mali ..	II
	Arbana U. P.	
88	Rakhal Chandra Dhar ..	II
91	Kartik Chandra Maity ..	II
	Salefatta U. P.	
95	Brindaban Chandra Das ..	II

Roll No.	Name.	Division.
	Amarda U. P.	
98	Basanta Kumar Mahapatra	II
99	Iswar Chandra Raul	II
100	Jnanendra Nath Maity (E)	II
101	Nagendra Nath Khatua	II
	Gomunda U. P.	
102	Narendra Nath Das	II
	Garbetta H. E. School Centre.	
	Garhbeta Practising U. P.	
1	Padmalochan Kundu (E)	II
2	Janaki Nath De(E)	II
3	Hare Pada Roy(E)	I
	Goaltore U. P.	
9	Anil Ch. De (E)	I
10	Jugal Ch. Mal (E)	I
11	Bejoy Basanta Kolay (E)	I
12	Ramkrishna Mal	II
13	Nimikanta Roy (E)	II
14	Kishori Mohan Mandal (E)	II
15	Moti Lal Adhya (E)	II
17	Radha Raman Dutt (E)	II
18	Radhya Shyam Chandra (E)	II
19	Subal Chandra Baria (E)	II
21	Sishir Kumar Sen (E)	II
22	Amal Kumar Sirkar (E)	II
24	Satish Chandra Mahata (E)	II
27	Sontosh K. Pramanik (E)	II
	Boncha U. P.	
28	Niranjan Khamrui (E)	I
29	Bijoy Chandra Hazari (E)	I
30	Gour Chandra Jana (E)	II
31	Bhut Nath Roy (E)	I
32	Joyram Khanrui (E)	II
33	Sakti Sadan Acharya (E)	I
35	Subodh Chandra Khanrui (E)	II
	Chandabila U. P.	
36	Sachindra Nath Patra (E)	I
37	Kishori Poti Roy	II
38	Bishwanath Biswas	I
39	Sarat Chandra Hazra	I
40	Radha Gobinda Ghose	I
41	Priya Nath Mahata	II
42	Bhut Nath Mahata	II
43	Gour Hari Bokai	II
	Bhadkari U. P.	
45	Sundar Kumar Saha (E)	II
46	Bhut Nath Mahata (E)	II
	Garanga U. P.	
51	Dasrathi Changdar (E)	I
52	Mani Bhusan Adhikari (E)	II
53	Benod Behari Ghose (E)	II
54	Pramatha Nath Maity (E)	II
	Moupal U. P.	
55	Karali Charan Mahata	I
56	Kisori Mohan Biswas	I
57	Kali Pada De	I
58	Ashutosh Das	II
59	Satish Chandra Mahata	II
	Nurdri U. P.	
60	Mahendra Nath Khetua	I
61	Khudiram Betal	I
62	Gostha Behari Patra	I
63	Bisnupada Kotal	I
	Nabakola Board U. P.	
65	Mahadev Maji (E)	I
66	Sharat Chandra Dutt (E)	I
67	Anukul Ch. Dhara (E)	II
68	Sashi Pati Ghose (E)	I
	Amlagora Kali Prasad U. P.	
69	Aswini Kumar Banerji (E)	II
70	Ajit Kumar Gon (E)	II
71	Kumari Nirmala Bala Mazumdar	II
	Bishnupur U. P.	
72	Haripada Sarkar (E)	I
73	Jaygopal Ghose (E)	II
	Nohari U. P.	
74	Kalidas Chatterjee (E)	I
75	Chandi Charan Chatterjee (E)	II
76	Manik Ratan Basu (E)	I
77	Ajit Kumar Ghose (E)	I
78	Krishna Ch. Karmakar (E)	I
79	Narayan Ch. Chatterjee (E)	II
	Sidadihi U. P.	
80	Gajanan Chatterjee	I
81	Anil Ch. Das	I
	Kharkusma U. P.	
82	Radha Nath Ghose (E)	I
83	Sambhu Nath Ghose (E)	I
84	Manmatha N. Pandit (E)	I
	Mahatapur U. P.	
85	Tarini Charan Mahata (E)	II
86	Debendra N. Mahata (E)	I
	Satpati U. P.	
87	Satya Kinkar Sow	I
88	Kshudiram Das	II
	Rameshwarpur (Nimtola) U. P.	
91	Biswambhar Mahis	I
	Sandhipur U. P.	
93	Mantosh Kumar Pal (E)	I
94	Kshudiram Ghose (E)	II
	Gopalnagar Kobadia Final Maktab.	
95	Parbati Charan Dey (E)	II
96	Kalipada Das (E)	I
97	Kalimuddin Ghazi (E)	II
98	Sk. Raushan Ali Ghazi (E)	I
99	Sk. Ayrul Huque (E)	II
100	Prafulla Kumar Dhuia (E)	I
	Jadabbati Board Maktab.	
101	Sk. Abdur Rahman (E)	I
102	Nepal Chandra Ghose (E)	II
	Pingla H. E. School Centre.	
	Nilot Board U. P.	
1	Aswini Kumar Ghose (E)	II
3	Nirod Chandra Acharjya (E)	I
4	Kshudiram Ghorai (E)	II
5	Manindra Nath Maity (E)	I
6	Krishna Chandra Jana	II
	Shelia U. P.	
7	Hemanta Kumar Santra	I

Roll No.	Name.	Division.
	Bonai U. P.	
9	Sreemati Pramila Bala Das	II
10	Phani Bhusan Ghorai	II
13	Kshudiram Dhara	I
	Kishorepur U. P.	
15	Haripada Samanta (E)	I
	Amdagopalpur U. P.	
16	Haradhan Manna	II
	Barsoara U. P.	
17	Jatindra Nath Maicap (E)	II
19	Kshudiram Mondal	II
	Bishnupur U. P.	
24	Bhusan Chandra Guchhait	I
25	Bhusan Chandra Bera	II
26	Swadesh Kumar Bhunia	II
27	Ekadashi Sahoo	II
	Gobindapur U. P.	
29	Adwaita Charan Pradhan	I
	Badalpur U. P.	
30	Kokil Chandra Samanta	I
31	Gunadhar Shit	I
32	Shachinandan Nath	I
33	Kali Kumar Bhattacharjya	I
34	Bikram Kishore Bera	II
35	Bhusan Chandra Sana	II
36	Ramkrishna Hati	II
	Kharika U. P.	
37	Shyamapada Mukherjee (E)	II
38	Ram Charan Bhattacharjya (E)	I
39	Kshudiram Jana (E)	II
40	Gunadhar Sasmal (E)	II
	Nedhua U. P.	
42	Kunja Behary Maity (E)	II
43	Pulin Behari Maity	II
	Akindi U. P.	
44	Manmatha Nath Maity	II
45	Adhar Chandra Sur	II
	Bhuniahat U. P.	
46	Jyotindra Nath Mishra	II
48	Bijoy Krishna Nandi	II
	Kolanda U. P.	
49	Ananta Prasad Bera	II
	Murarichak U. P.	
53	Nityananda Bera	II
	Balpai U. P.	
55	Panchanan Panja	II
	Kerur Board U. P.	
56	Amulya Charan Kar	I
	Kamarpota U. P.	
57	Pashupati Roul (E)	II
58	Chintamoni Maity (E)	II
	Bural U. P.	
59	Gunadhar Maity (E)	II
62	Bishnupada Bankura (E)	II

Roll No.	Name.	Division.
	Ragpur U. P.	
69	Haripada Pal	II
70	Satyeswar Maity	II
	Lakshmipari U. P.	
75	Sreemati Ramani Sundari Pramanik	II
76	Bankim Chandra Das	I
77	Jiban Chandra Mandal	II
	Jasorajpur U. P.	
78	Kshudiram Samanta	II
	Jalchak Board U. P.	
80	Niranjan Das (E)	I
81	Pratap Chandra Chakravarti (E)	I
82	Niranjan Dinda (E)	I
83	Phanindra Nath Santra (E)	II
84	Narendra Nath Manna (E)	II
85	Sushil Chandra Chakravarti (E)	II
	Pindroi U. P.	
87	Phani Bhusan Acharjya	I
88	Gourpada Ghora	II
89	Amulya Charan Samanta	II
	Beluria U. P.	
90	Ramapati Maity	I
91	Shyam Charan Bag	II
92	Kshudiram Maity	I
	Naratha U. P.	
93	Sudhindra Nath Adhikari (E)	I
94	Radhanath Maity (E)	I
	Maligram U. P. No. 1.	
98	Chintamani Samanta	I
99	Gobardhan Samanta	II
100	Gobinda Charan Bera	II
	Maligram U. P. No. 2.	
101	Satish Chandra Adhikari	I
102	Niranjan Roy	II
103	Chittaranjan Das	II
	Kunjapur U. P.	
104	Amulya Ratan Mandal	II
105	Abinash Chandra Santra	II
	Handole Board U. P.	
108	Kishori Mohan Gantait	I
109	Shashi Bhusan Pramanik	I
	Daniçhak U. P.	
111	Dhirendra Nath Maity	I
112	Nagendra Nath Maity	II
113	Nagendra Nath Dutta	II
	Khanbichak U. P.	
114	Abinash Chandra Pramanik	II
115	Ajit Kumar Dinda	I
116	Jatindra Nath Maity	I
	Dakshin Kuchaipur U. P.	
118	Sudhanshu Kumar Manna	II
	Kaliara U. P.	
120	Bibhuti Bhusan Das	II
122	Bibhuti Bhusan Bhunia	II
	Kantapukur U. P.	
124	Ananta Charan Dutta	II

Roll No.	Name.	Division.
	Kalikadihi U. P.	
128	Bankim Behari Dey (E) ..	II
	Sagarpura U. P.	
129	Prankrishna Maity ..	II
131	Bhusan Chandra Samanta ..	II
	Jhargram H. E. School Centre.	
	Parihati U. P.	
1	Ardhendu Sekhar Pani (E) ..	I
2	Sailajananda Pani (E) ..	I
3	Kalipada Pal (E) ..	I
	Nunia U. P.	
4	Sheikh Matleb (E) ..	I
5	Baidya Nath Pani (E) ..	I
	Dhengbhohora U. P.	
6	Purna Chandra Shit (E) ..	II
7	Bhuban Mohan Shit (E) ..	II
	Manikpara U. P.	
9	Bankim Bihari Banerji (E) ..	I
11	Amiya Kumar Pal (E) ..	II
	Ektal U. P.	
13	Rash Bihari Mahata (E) ..	I
14	Kshitish Chandra Giri (E) ..	I
15	Gobordhan Mahata (E) ..	II
16	Hara Mohan Sinha (E) ..	I
17	Swarup Chand Mahata (E) ..	II
	Bahirgram U. P.	
18	Chittaranjan Patar (E) ..	I
	Dharsa U. P.	
20	Chandra Mohan Bisui ..	II
	Kuldiha U. P.	
21	Manindra Nath Mahata (E) ..	I
22	Durga Prosad Mahata (E) ..	I
23	Gobinda Prosad Mahata ..	II
	Pukhuria U. P.	
24	Jadav Chandra Patar (E) ..	II
25	Gobardhan Mahata ..	II
	Bandhgora U. P.	
29	Basudeb Basu (E) ..	I
30	Nagendra Nath Satapathi (E) ..	I
31	Atul Krishna Sarangi (E) ..	I
32	Brindaban Chandra Roy (E) ..	I
33	Panchanan Mahata (E) ..	I
34	Tarapada Chatterji (E) ..	I
	Barkola U. P.	
35	Jati Lal Sahu (E) ..	I
36	Bankim Chandra Giri (E) ..	II
37	Rajendra Nath Sahu (I) (E) ..	II
38	Rajendra Nath Sahu (II) (E) ..	I
39	Hari Lal Maity (E) ..	II
40	Radha Gobinda Mahapatra (E) ..	II
41	Durlav Chandra Shyamal (E) ..	II
	Dumuria U. P.	
43	Benode Behari Das (E) ..	II
44	Rameswar Maity ..	II
45	Sanatan Maity ..	II
46	Parbati Kumar Maity (E) ..	II
47	Balak Chandra Shit (E) ..	II

Roll No.	Name.	Division.
	Andheria Board U. P.	
49	Bhabataran Masanta ..	I
50	Chittaranjan Pal ..	II
51	Saikh Abdul Jabbar ..	II
52	Monoranjan De ..	I
	Saurpura U. P.	
57	Bimala Charan Parhiya ..	I
58	Kripa Sindhu Pati ..	I
59	Balak Chandra Das ..	II
60	Bharat Chandra Dhara ..	II
	Aulia U. P.	
61	Profulla Kumar Roy ..	II
64	Madhab Chandra Mahapatra (E) ..	II
	Lochipur U. P.	
69	Sambhu Nath Patra ..	II
	Belpahari U. P.	
71	Aghor Nath Patta Nayak (E) ..	I
72	Tribhuban Behari Pain (E) ..	II
74	Manikchand Singh ..	II
76	Gurai Sardar (E) ..	II
77	Spatik Chand Choudhury (E) ..	II
79	Saikh Abed Ali (E) ..	II
	Gohomidanga U. P.	
80	Rash Behari Samanta (E) ..	II
81	Madhusudan Samanta (E) ..	II
	Dahijuri U. P.	
82	Bholanath Das (E) ..	II
83	Dwarika Nath Pratihar (E) ..	I
84	Nikunja Behari Misra (E) ..	II
85	Baidya Nath Murmu (E) ..	II
	Champtiara U. P.	
90	Bejoy Krishna Das ..	II
	Dahijuri U. P.	
91	Bijan Basini Kundu (E) ..	II
	Beragari Final Maktab.	
92	Narendra Pal ..	I
	Kamarbandi U. P.	
98	Priyanath Besra (E) ..	II
100	Lasa Hembrom (E) ..	II
101	Kartik Murmu (E) ..	I
102	Gour Chandra Mahato (E) ..	II
103	Lakshan Chandra Kalya (E) ..	II
105	Satish Chandra De (E) ..	II
106	Gobinda Karmakar (E) ..	II
	Kenduasuli U. P.	
107	Bishnu Pada Tudu (E) ..	I
108	Sambhunath Kisku (E) ..	II
109	Baidyanath Tudu (E) ..	II
111	Lakshan Marandy ..	II
113	Madhusudan Mahato (E) ..	II
	Bonssole U. P.	
116	Chunaram Marandy (E) ..	I
118	Harichand Murmu (E) ..	II
	Ramchandrapore U. P.	
121	Gajendra Hansda (E) ..	II
123	Mohendranath Saren (E) ..	II
	Bonpukhuria U. P.	
125	Madhusudan Hembrom ..	II

Roll No.	Name.	Division.
	Kohiladanga U. P.	
127	Jojneswar Saren (E)	II
128	Durlab Chandra Marandy	II
130	Hariharan Das Mohanta (E)	I
	Nayabasan M. E. School Centre.	
	Laupara U. P.	
3	Sm. Mandakini Dasi (E)	II
4	Anantalal Ghosh (E)	II
6	Kanailal Sing (E)	II
	Akna U. P.	
7	Bijaya Kanta Sau (E)	I
8	Satish Ch. Senapati (E)	II
	Askola U. P.	
9	Hadiram Ghosh (E)	II
10	Surendranath Pal (E)	II
11	Jatish Chandra Ghosh (E)	II
12	Janmejoy Pal (E)	II
	Alampur U. P.	
15	Bhagirathi Paira (E)	I
16	Bibhuti Bhusan Shit (E)	I
17	Baidyanath Giri (E)	I
18	Nagendranath Rath (E)	II
	Nuniasol U. P.	
19	Sisir Kumar Ghosh (E)	II
	Amarda U. P.	
21	Kedarnath Mandal (E)	II
22	Sarat Ch. Kuila	II
23	Satish Ch. Pal	II
	Saora U. P.	
25	Ajoybihari Patnaik (E)	II
	Marchi U. P.	
27	Joyhari Paloi (E)	I
28	Mrityunjoy Ghosh (E)	I
29	Durjyodhan Paloi (E)	I
30	Syamsundar Mahapatra (E)	I
31	Chunaram Mahato (E)	I
32	Jhareswar Raj	II
33	Iswar Ch. Sau	I
	Kukrakhupi U. P.	
36	Amulya Chandra Sen	I
37	Khagendranath Das	I
38	Harish Chandra Das	II
39	Nagendranath Maiti	II
40	Kshatu Charan Paira	II
41	Achintyanath Sinha	II
42	Surendranath Das	II
45	Nitaicharan Mahato	I
	Kharbandi U. P.	
49	Bidyadhar Nayak (E)	II
50	Nibaran Ch. Setua (E)	I
51	Saroj Ch. Karan (E)	II
52	Jatindranath Paloi (E)	II
	Kharika U. P.	
53	Amulya Charan Giri (E)	I
54	Surendranath Mahakur (E)	II
55	Jnanendranath Mahakur (E)	II
56	Narendranath Giri (E)	II
57	Surendranath Rana (E)	II
	Bajuaguri U. P.	
58	Chintamoni Jana (E)	II
60	Purna Ch. Jana (E)	II

Roll No.	Name.	Division.
	Kultikiri U. P.	
62	Bhagabat Ch. Pradhan (E)	II
	Padenia U. P.	
63	Gunadhar Dey (E)	II
64	Kedarnath Sinha (E)	I
	Marunia U. P.	
65	Trilochan Sing (E)	II
	Laudaha U. P.	
67	Srimati Chamatkar Dasi (E)	I
68	Suresh Ch. Pariari (E)	I
69	Manmathanath Pradhan (E)	II
70	Kailas Ch. Paira (E)	I
	Baligeria U. P.	
72	Narendranath Mahato (E)	II
73	Gobardhan Barik (E)	II
	Pathra U. P.	
75	Sankar Ch. Mahato (E)	II
	Petbindhi U. P.	
77	Brindaban Palui (E)	I
78	Jajneswar Panda (E)	I
79	Satyanath Panda (E)	I
80	Kalicharan Mandal (E)	I
81	Bhupati Chandra Kar (E)	I
	Kuldiha U. P.	
82	Kesab Ch. Mahato (E)	II
83	Upendranath Mahato (E)	II
	Amdiha U. P.	
87	Jhareswar Setua (E)	II
	Malancha U. P.	
88	Fakir Ch. Patra (E)	I
89	Prithwinath Ghosh (E)	II
	Patina U. P.	
91	Purna Chandra Das (E)	II
92	Umesh Ch. Rout (E)	II
	Dangria U. P.	
93	Sreepatinath Pradhan (E)	II
94	Gobardhan Das (E)	I
	Kartia U. P.	
95	Dibakar Ghosh (E)	I
96	Jatindranath Dandapat (E)	II
97	Kishorilal Sahu (E)	II
98	Nalinikanta Pal (E)	I
	Tentulia U. P.	
100	Isan Ch. Misra (E)	II
	Andhari U. P.	
101	Gopinath Shee (E)	II
102	Nagendranath Sen (E)	II
103	Priyanath Das (E)	II
104	Banchhanidhi Jana (E)	II
105	Basanta Kumar Dey (E)	II
107	Harihar Dalai (E)	II
	Haripura U. P.	
110	Chittaranjan Paloi (E)	I
111	Nagendranath Sing (E)	II
	Nayagram U. P.	
113	Panchanan Tripathi (E)	I
114	Bhupatibhusan Ghosh (E)	II

Roll No.	Name.	Division.
	Ekur U. P.	
115	Kedarnath Das (E)	II
116	Harihar Bera (E)	II
117	Upendranath Bera (E)	II
	Madansol U. P.	
121	Lambodar Dubey (E)	I
	Dangria U. P.	
126	Srimati Malatibala Tudlu	I
	Pochabindha U. P.	
127	Radhanath Paira	II
	Laupara U. P.	
129	Srimati Rashmoni Dasi	II
	Polashia U. P.	
131	Kamalakanta Mahato (E)	I
132	Amritalal Patar (E)	II
134	Fager Marandy (E)	II
	Hanschara H. E. School Centre.	
	Bajaberia U. P.	
1	Nagendra Nath Manna (E)	II
2	Jatindra Nath Das (E)	I
3	Tarendra Nath Manna (E)	I
	Kadamtala U. P.	
5	Nikhil Ranjan Maity (E)	I
6	Adhar Chandra Das	II
7	Anil Chandra Maity	I
8	Ranjan Kumar Gurya	II
9	Basanta Kumar Bera (E)	II
	Atattar U. P.	
10	Manmatha Nath Roy (E)	I
11	Sudhir Chandra Acharya	II
12	Bijoy Ranjan Pati (E)	I
	Raichak U. P.	
13	Jyoti Prasad Bera (E)	I
14	Abinash Chandra Jana	I
15	Jyoti Prasad Das (E)	I
	Kandapasra U. P.	
16	Santosh Kumar Giri (E)	I
17	Nidhiram Giri	II
18	Rajani Kanta Bhunia (E)	I
19	Santosh Kumar Karan	I
	Kulapara U. P.	
20	Suk Chand Pal (E)	II
21	Anantaram Mandal (E)	I
22	Santosh Kumar Misra (E)	I
23	Hrishi Kesh Das (E)	I
24	Kajeb Ali Khan (E)	I
25	Ananta Ram Kar (E)	I
26	Bishnupada Das (E)	I
27	Bijoy Basanta Kar (E)	I
28	Ohab Ali Khan (E)	I
29	Sudhir Chandra Das (E)	I
	Shamsundarpur U. P.	
30	Gobinda Chandra Giri (E)	I
31	Nagendranath Nayek (E)	I
32	Debendranath Das	I
33	Nikhil Chandra Roy (E)	I
34	Adwaita Chandra Das	II
35	Beharilal Mandal (E)	II
36	Kalipada Giri (E)	I

Roll No.	Name.	Division.
	Shibrampur Board U. P.	
37	Panchanan Pramanik (E)	I
39	Sudhir Chandra Panja (E)	I
40	Bhabesh Chandra Manna (E)	I
41	Baghambar Maity (E)	I
	Baram U. P.	
42	Dhirendranath Das	II
43	Haripada Mandal (E)	I
44	Nanigopal Ponda (E)	I
45	Shyamacharan Das (E)	I
46	Adhar Chandra Gurya (E)	I
47	Benode Behari Bag (E)	I
48	Sripati Charan Pradhan (E)	I
49	Rajkrishna Pradhan (E)	II
	Dekasimpur U. P.	
50	Bibhuty Bhusan Giri	I
51	Iswar Chandra Das	II
52	Phanindra Kumar Jana	II
	Hanubhunia L. N. U. P.	
53	Nalini Kanta Maity (E)	I
54	Manmathanath Dhara	I
55	Basanta Kumar Giri (E)	I
56	Dharanidhar Jana	II
57	Mahim Chandra Maity (E)	I
58	Sripati Kumar Jana	II
59	Narendranath Jana (E)	I
60	Nagendranath Bhunia (E)	II
61	Bibhuty Bhusan Giri (E)	I
63	Arjun Chandra Mallik (E)	I
64	Atul Chandra Gole (E)	II
65	Manoranjan Maity (E)	II
	Gholpukur U. P.	
66	Jagadish Chandra Das (E)	II
67	Sreemati Rajabala Maity	I
68	Ajit Kumar Jana (E)	II
	Uttar-Gholpukur U. P.	
70	Sudhir Chandra Jana (E)	II
71	Khagendranath Maity	II
72	Gunadhar Bera (E)	I
73	Annada Charan Maity (E)	II
	Srikrishnapur U. P.	
74	Byomkesh Ghorai (E)	I
75	Haripada Maity (E)	I
76	Haripada Sasmal (E)	I
77	Bangabijoy Maity (E)	I
78	Nitai Chand Maity (E)	I
80	Niranjan Manna (E)	I
81	Dhirendranath Kamila (E)	I
82	Mriganka Mohan Jana (E)	I
83	Tarendranath Giri (E)	II
	Chiranjibpur R. N. U. P.	
84	Santosh Kumar Pramanik (E)	I
85	Sreemati Kiranbala Taladhi (E)	II
87	Dhananjoy Maity (E)	II
	Kulbari U. P.	
88	Phanindra Nath Pradhan (E)	I
89	Amulya Charan Jana	I
90	Bhutnath Mandal (E)	I
91	Sristidhar Mandal (E)	I
92	Anil Krishna Das (E)	I
	Manoharpur Bandhab U. P.	
93	Anantakumar Panda (E)	I
94	Basudeb Dinda (E)	II
95	Gobardhan Mandal (E)	I
96	Benode Behari Patla (E)	I

Roll No.	Name.	Division.
	Norghat U. P.	
97	Debendra Nath Bera (E)	I
98	Sudhir Chandra Pal (E)	I
99	Pulin Behari Pradhan (E)	I
100	Bhagyadhar Maity (E)	I
	Ururi U. P.	
102	Sudhir Chandra Mandal	II
	Muradpur U. P.	
104	Shaktipada Das (E)	I
105	Kalikrishna Jana (E)	I
106	Subodh Chandra Maity (E)	I
107	Sukdeb Maity (E)	I
108	Bhagbat Daloi (E)	I
	Brajalalchak U. P.	
109	Bhagyadhar Maity	II
110	Bansibadan Maity (E)	I
	Chunkhabari Jatnamoyee U. P.	
112	Sitanath Bhunia (E)	I
113	Dhirendra Nath Giri (E)	I
114	Tarendra Nath Bhunia (E)	I
	Kulapara U. P.	
116	Phanibhusan Samanta (E)	I
	Chandipur Sriramkrishna Model U. P.	
117	Dwijendra Nath Maity (E)	II
118	Phanindra Nath Maity (E)	II
	Tamluk Hamilton H. E. School Centre.	
	Ganjanarainpore U. P.	
1	Upendra Nath Kollat (E)	I
2	Ram Chandra Kollat (E)	II
3	Khudiram Patra (E)	II
	Ponan U. P.	
5	Hare Krishna Samanta (E)	I
6	Paresh Chandra Maity (E)	II
7	Mohan Chandra Khanra (E)	II
8	Prankrishna Samanta (E)	I
9	Satyeswar Samanta (E)	I
	Khanjadapur U. P.	
10	Kartick Chandra Samanta (E)	I
11	Shrikanta Mohan Dolui (E)	II
12	Jayanta Kumar Samanta (E)	II
13	Gostha Behary Kuila (E)	II
14	Mati Lal Samanta (E)	II
	Gobindapur U. P.	
15	Amulya Charan Maity (E)	I
16	Pulin Behary Pattanayak (E)	I
17	Mahadev Ghorui (E)	II
18	Kanai Lal Samanta (E)	II
19	Bishnu Pada Saw (E)	I
20	Gour Hari Mandal (E)	II
	Biswas U. P.	
22	Ahibhusan Mandal (E)	I
23	Bhima Charan Samanta (E)	I
24	Becharam Bhumia (E)	I
25	Sripati Charan Samanta (E)	II
26	Hira Lal Samanta (E)	II
	Kiakhali U. P.	
27	Aswini Kumar Maity (E)	II
28	Sashi Bhusan Khatua (E)	II
31	Bhimacharan Ghanta (E)	I
32	Bhimacharan Bhowmic (E)	II
34	Mrittunjoy Mandal (E)	II
35	Manmatha Nath Manna (E)	II
37	Sachchidananda Mahapatra (E)	I

Roll No.	Name.	Division.
	Barbaria U. P.	
38	Bhusan Chandra Paul (E)	II
39	Achchutannuja Pradhan (E)	II
41	Kalipada Mandal (E)	II
	Nilkunthya U. P.	
44	Shyama Charan Manna (E)	I
45	Khudiram Jana (E)	I
46	Purna Chandra Adak (E)	I
47	Haripada Majhi (E)	I
48	Prankrishna Bar (E)	I
49	Chandi Charan Jana	II
50	Kalipada Bera (E)	II
	Chapbasan U. P.	
51	Bholanath Sainik	I
52	Gour Chandra Mandal	I
	Shumulia U. P.	
53	Ananga Mohan Hait (E)	I
54	Bishnu Pada Maity (E)	I
	Chatradanri U. P.	
57	Kanai Lal Majhi (E)	I
49	Mrittunjay Adhikary (E)	II
	Barhatgechhia U. P.	
63	Radhanath Giri	II
65	Jibankrishna Bera	II
	Hurinan U. P.	
66	Hrishikesh Chakraverty	II
67	Jibanchandra Dua	II
68	Mukundalal Kar (E)	II
	Mathuri U. P.	
69	Harish Chandra Maity (E)	I
70	Bhusan Chandra Maity (E)	I
71	Parameswar Samanta (E)	I
72	Saikh Samian Hosen (E)	I
	Kashipore U. P.	
73	Krishnapada Samanta (E)	II
74	Bhagirathi Thunder	II
75	Satish Chandra Patra	II
76	Khagendra Nath Pramanik (E)	II
77	Santosh Kumar Manna (E)	II
78	Gunadhar See	II
	Suadighi U. P.	
81	Kali Pada Mandal (E)	II
82	Suhir Chandra Mandal (E)	I
83	Bishnupada Chakravarty (E)	II
85	Nalini Chandra Metta (E)	II
87	Amulya Charan See (E)	II
89	Gunadhar Manna (E)	II
	Kharidangar U. P.	
90	Radhakanta Maity (E)	II
91	Krishnapada Bera	II
	Khoskhana U. P.	
92	Manmatha Nath Choudhuri	II
93	Jotindra Nath Baksi	I
	Bisnu Bar U. P.	
96	Jotindra Nath Maity (E)	I
	Kulberia U. P.	
99	Bishnu Pada Kuila (E)	I
100	Gajendra Nath Ghorai (E)	II
	Chitra U. P.	
101	Kunja Bihari Ghorai (E)	II

Roll No.	Name.	Division.
	Bahichar U. P.	
106	Anil Kumar Giri (E) ..	II
	Kurpai U. P.	
109	Narayan Chandra Jana (E) ..	I
110	Kartik Chandra Paul (E) ..	II
111	Sudhir Ch. Zamadar (E) ..	II
112	Bishnupada Maity (E) ..	II
115	Bishnupada Patra (E) ..	II
116	Nani Gopal Das (E) ..	II
118	Amulya Ch. Chowdhuri (E) ..	II
	Janubasan U. P.	
119	Krishnapada Santra (E) ..	II
120	Kanai Lal Samanta (E) ..	II
	Kharui U. P.	
121	Sudhir Chandra Das (E) ..	II
122	Judhistir Ch. Kodal (E) ..	II
125	Anil Kumar Gangopadhyaya (E) ..	II
	Santipur U. P.	
126	Kalipada Das ..	II
	Balluk U. P.	
127	Amulya Ch. Samanta (E) ..	I
129	Bishnu Pada Paria (E) ..	II
130	Narayan Ch. Kar (E) ..	II
	Jotaviram U. P.	
131	Jiban Ch. Bhunia (E) , ..	II
132	Sudhir Ch. Pattanayak (E) ..	II
133	Shyama Pada Maity (E) ..	I
134	Manmatha Nath Misra (E) ..	II
	Paikpari U. P.	
135	Gobinda Ch. Paria (E) ..	II
136	Narayan Ch. Mudly (E) ..	II
137	Adhar Ch. Jana (E) ..	II
	Ramkalua U. P.	
139	Bhusan Ch. Mahapatra (E) ..	II
140	Girish Ch. Mahapatra (E) ..	II
	Guzarkharui U. P.	
141	Rajendra Nath Kar (E) ..	II
	Tamluk Practising U. P.	
144	Kanai Lal Bera (E) ..	II
148	Haripada Maji (E) ..	II
	Chatradari U. P.	
149	Upendra Nath Mandal ..	II
	Ichapur U. P.	
150	Loke Nath Bhattacharya (E) ..	II
151	Prafulla Chandra Maity ..	II
152	Mrityunjoy Das ..	II
	Padumpur U. P. Maktab.	
153	Md. Abdus Sattar (E) ..	II
	Simulia U. P. Maktab.	
154	Sk. Reajul Huq (E) ..	I
156	Sk. Refayet Hossain (E) ..	I
	Santipur U. P. Maktab.	
157	Jahurunnessa (E) ..	II
160	Sk. Abdus Sobhan (E) ..	II
161	Narayan Ch. Pramanik (E) ..	II
	Jamitya U. P.	
163	Rabindra Nath Guchhait (E) ..	II
165	Santosh Kumar Majhi (E) ..	II

Roll No.	Name.	Division.
	Nandigram H. E. School Centre.	
	Bhakutia Basanti U. P.	
1	Aswini Kumar Das (E) ..	I
2	Raghunath Das (E) ..	II
3	Shreemati Debajani Debi ..	II
	Tajpur U. P.	
4	Nirmal Chandra Paul (E) ..	I
5	Bhagyadhar Jana (E) ..	I
6	Haripada Bhattacharyya (E) ..	I
7	Debendranath Paul (E) ..	I
8	Benimadhav Maity (E) ..	II
9	Byomkesh Jana (E) ..	I
10	Sharanon Misra ..	II
11	Atul Chandra Gayan (E) ..	I
12	Ramesh Chandra Jana (E) ..	II
13	Shreemati Bibhabari Jana ..	I
14	Shreemati Sabitri Jana ..	I
15	Sarbeswar Bhunia ..	I
	Nayanal U. P.	
16	Arjun Chandra Barik (E) ..	II
17	Nesar Ali Beg (E) ..	II
	Amratalia Janakinath U. P.	
18	Jnanendranath Maity (E) ..	I
19	Rasamay Maity (E) ..	I
20	Shreemati Pravabati Maity (E) ..	I
21	Subodh Chandra Maity (E) ..	I
	Kandapasara Ananda U. P.	
22	Jitendranath Bhunia (E) ..	I
23	Kalipada Guria (E) ..	II
24	Adwaita Kumar Das (E) ..	II
25	Panchanan Patra (E) ..	II
26	Keshab Chandra Malakar (E) ..	I
	Amdabad Barimal Dharanidhar U. P.	
27	Iswar Chandra Paul (E)	I
28	Sudhangsu Sekhar Das (E)	I
29	Amulyaratan Bhunia (E) ..	I
30	Hrishikesh Das (E) ..	II
32	Giridhari Das (E) ..	I
33	Kedarnath Mandal (E) ..	II
34	Srimati Kulabala Bhunia (E) ..	I
35	Srimati Snehalata Bhunia (E) ..	I
36	Srimati Menaka Sundari Bhunia (E) ..	I
	Haripur U. P.	
37	Debendra Nath Panda (E) ..	II
38	Kagendranath Singhatal (E) ..	I
39	Adhir Ch. Pradhan (E) ..	I
40	Sib Charan Barik (E) ..	II
41	Bishnuhari Maity (E) ..	II
42	Sukesh Chandra Singhatal (E) ..	II
44	Nirod Baran Paul (E) ..	I
45	Harendranath Paul (E) ..	II
46	Chaturbhuj Panda (E) ..	II
47	Ananta Kumar Karan (E)	I
	Basulichak U. P.	
49	Ananta Kumar Das (E) ..	II
50	Hrishikesh Bera (E) ..	II
51	Manoj Kumar Giri (E) ..	II
52	Bankim Ch. Bhunia (E) ..	II
	Ranichak U. P.	
53	Amulya Ratan Roy (E) ..	II
54	Gunadhar Das (E) ..	II
55	Nani Gopal Ray (E) ..	I
56	Balai Lal Barai (E) ..	I
57	Sudhangsu Sekhar Das (E) ..	II
58	Bambehari Das (E) ..	II

Roll No.	Name.	Division.
	Sanachura Gourahari U. P.	
59	Srinibash Maity (E)	I
60	Manmathanath Prodhan (E)	I
61	Bhupati Charan Manna (E)	I
62	Sudhir Ch. Kajli (E)	I
	Barkalicharanpur Binapani U. P.	
63	Binodebehari Bera (E)	I
64	Dhirendra Nath Guria (E)	II
65	Dhirendra Nath Giri (E)	II
	Garchakraberia Yakub U. P.	
66	Sheikh Ahamad (E)	I
67	Kenaram Das (E)	II
68	Srimati Santilata Mandal (E)	I
69	Kalipada Jana (E)	II
70	Hrishikesh Mandal (E)	II
71	Shashibhusan Bera (E)	II
73	Jitendra Nath Pati (E)	I
74	Kshudiram Jana (E)	I
75	Niranjan Bera (E)	II
76	Manmatha Kumar Ojha (E)	I
	Purusattampur U. P.	
77	Saktidhar Satpati (E)	II
79	Mriganka Panigrahi (E)	II
80	Abanindra Panigrahi (E)	II
81	Pasupati Panda (E)	II
83	Srimati Aparna Debi (E)	II
	Srigouri U. P.	
85	Bhutnath Panda (E)	II
86	Hrishikesh Pradhan (E)	II
88	Sudhangsu Bh. Panda (E)	II
90	Bepin Behari Sasmal (E)	II
	Tarapakhia U. P.	
92	Kenaram Patra (E)	II
	Berulia U. P.	
93	Khagendra Nath Manna (E)	I
94	Niranjan Maity (E)	II
95	Haradhan Maity (E)	II
	Amdabad U. P.	
96	Kalipada Jana (E)	I
97	Sudhir Kumar Paul (E)	II
98	Surendra Nath Maity (E)	II
99	Chintamani Mandal (E)	II
	Pathuria U. P.	
101	Purna Chandra Khatua (E)	I
103	Manibhusan Das (E)	II
104	Jayanta K. Chakrabarty	II
	Doudpur U. P.	
105	Sk. Ahameduddin Kazi (E)	I
106	Atul Ch. Rout (E)	I
107	Chinmay Charan Panda (E)	II
109	Alokenath Tripathi (E)	I
110	Jibankrista Singha (E)	II
111	Abinash Sow (E)	II
	Ramnathchak Narayanprasad U. P.	
112	Bankim Ch. Pradhan (E)	II
113	Surendranath Ballav (E)	I
115	Kushadhwaj Pramanik (E)	II
	Sondkhali Sitala U. P.	
117	Dinesh Chandra Mishra (E)	I
118	Jogesh Ch. Mishra (E)	I
	Simalkunda U. P.	
119	Binod Behari Mandal (E)	II
120	Haripada Bhunia (E)	I
121	Bishnuhari Das (E)	II
	Manuchak U. P.	
122	Mahadeb Pandit (E)	II
123	Gouranga Charan Bera (E)	I
124	Sudhir Ch. Dolai (E)	I
125	Mani Shankar Ghorai	II
126	Indubhusan Giri (E)	II
127	Jadupati Giri (E)	II
129	Gobardhan Bera (E)	II
	Dabipur Kamdeb U. P.	
131	Kusadhwaja Bera (E)	I
132	Gourahari Das (E)	I
133	Rasamay Chakravarty (E)	II
134	Pulinbehari Patra (E)	I
135	Niranjan Das (E)	I
136	Nisitha Kumar Das (E)	I
137	Nagendra Nath Maity	II
	Narasinghapur U. P.	
138	Prajapati Jana (E)	I
139	Hare Krishna Bera (E)	II
140	Satish Chandra Tunga (E)	II
141	Bhagyadhar Shi (E)	II
142	Banamali Bera (E)	I
143	Anil Kumar Jana (E)	II
	Kalicharanpur Board U. P.	
144	Jahar Lal Jana (E)	I
145	Ajit Kumar Maji (E)	I
146	Ajit Kumar Bhakta (E)	I
147	Mahadeb Ch. Samanta (E)	I
148	Bibhubilash Jana (E)	II
149	Bhupati Nath Das	II
	Durgapur U. P.	
151	Kalipada Jana (E)	II
152	Sripati Ch. Das (E)	II
153	Niranjan Jana (E)	II
154	Prajapati Khanra (E)	II
155	Srimati Giribala Dei	I
156	Srimati Niharbala Dei	I
	Takapara U. P. No. I.	
157	Haripada Sen	I
158	Probodh Chandra Maji (E)	II
159	Hemanta Kumar Bera (E)	II
160	Debendra Nath Giri (E)	II
161	Debendra Nath Guria (E)	I
162	Bhagyadhar Das (E)	II
163	Bankim Behari Khatua (E)	II
	Kamalpur U. P.	
164	Pulin Behari Jana (E)	I
165	Bhupati Charan Gayan (E)	II
166	Kumud Bandhab Khatua (E)	I
167	Shasibhusan Pradhan (E)	I
169	Basanta Kumar Khatua (E)	I
	Bhaturia U. P.	
171	Atul Chandra Das (E)	I
172	Chittaranjan Manna (E)	II
173	Hrishikesh Ray (E)	II
174	Madhab Chandra Bhunia (E)	I
175	Abinash Chandra Khatua (E)	II
	Gokulnagar Gobindajew U. P.	
177	Sripati Charan Mandal (E)	II
181	Suresh Chandra Barui (E)	II
185	Bhuban Mohan Pramanik (E)	II
	Nandigram Braja M. Model U. P.	
187	Haradhan Ballav (E)	I
188	Santosh Kumar Maity (E)	I
189	Upendra Nath Das (E)	II
190	Aditya Prava Bera (E)	I
	Jibanpur U. P.	
191	Anil Kumar Tripati (E)	II

Roll No.	Name.	Division.
	Gopimohanpur U. P.	
193	Sk. Based (E)	I
194	Sk. Wazed Mallik (E)	I
195	Sk. Kashed (E)	II
196	Sk. Taphiluddin (E)	II
197	Bashed Khan (E)	I
198	Sk. Hapijuddin	I
	Takapur U. P. T. II.	
200	Rakhal Chandra Mandal (E)	I
201	Santa Kumar Pradhan (E)	II
202	Srihari Charan Pramanik (E)	I
203	Radha Krishna Giri (E)	I
204	Atul Chandra Patra (E)	I
205	Parameswar Das (E)	II
206	Rash Behari Giri (E)	I
208	Paresh Chandra Maity (E)	II
210	Abinash Chandra Patra (E)	II
211	Debendra Nath Sasmal (E)	II
	Brindabanchak U. P.	
213	Pasupati Charan Bag (E)	I
214	Krishna Das Mandal (E)	II
215	Surendra Nath Kamila (E)	II
216	Bankim Behari Bag (E)	I
217	Sarbeswar Chawlia (E)	II
218	Gopikanta Das (E)	II
	Barachira Board U. P.	
219	Tarendra Nath Mandal	I
220	Niranjan Kamila (E)	I
221	Panchanan Das (E)	I
222	Kiran Chandra Manna (E)	I
223	Iswar Chandra Bera (E)	II
224	Manindra Nath Jana (E)	II
226	Bhim Charan Jana (E)	II
227	Kanai Lal Pradhan (E)	II
	Benodepur U. P. Maktab.	
229	Sk. Abdul Khaleq (E)	II
230	Sk. Nemajuddin (E)	II
	Chandannagar U. P. Maktab.	
234	Abdul Gafur Khan (E)	II
235	Amanullah Khan (E)	II
236	Nur Alam (E)	I
237	Habibur Rahman Khan (E)	I
238	Lutfur Rahman Khan (E)	I
239	Abul Hossain (E)	II
240	Sk. Golam Maabud (E)	II
	Kanchannagar U. P. Maktab.	
241	Sk. Abdul Gafur (E)	II
244	Sk. Sujauddin (E)	II
245	Sk. Ruhul Amin (E)	II
248	Dhirendra Ch. Patra (E)	II
	Bheturia U. P. Maktab.	
250	Benimadhab Giri (E)	II
	Amratolia U. P. Maktab.	
255	Sk. Konayetullah (E)	II
	Kamalpur U. P. Maktab.	
258	Abdul Majed Shah (E)	II
259	Jiban Krishna Maity (E)	I
	Janka U. P. Maktab.	
264	Sk. Nasiruddin	II
	Gadaibalkar U. P. Maktab.	
266	Aswini Kumar Jana (E)	II

Roll No.	Name.	Division.
	Doro Krishnagar M. E. School Centre.	
	Kukrahati U. P.	
1	Jagadananda Samanta (E)	I
2	Madanmohan Sasmal (E)	I
4	Niranjan Maity (E)	II
5	Kanailal Maity (E)	II
6	Purna Chandra Mondal (E)	I
7	Chatturbhoj Mondal	II
	Guaberia U. P.	
10	Bhupaticharan Bhunya (E)	II
	Barabari U. P.	
11	Sk. Ebat Khan (E)	I
12	Anwar Mallick (E)	II
13	Radhakrishna Maity (E)	I
14	Bijoy Kumar Das (E)	I
15	Basanta Kumar Das (E)	I
16	Atul Chandra Samanta (E)	II
17	Purna Ch. Roy (E)	II
18	Beharilal Manna (E)	II
	Hariballavpur U. P.	
20	Aswini Kumar Das (E)	II
21	Kartick Ch. Das (E)	I
22	Chintaharan Das (E)	II
	Rajnagar U. P.	
23	Nanigopal Shee (E)	I
24	Sudhir Kumar Bera (E)	II
	Nutshal Narsingchak U. P.	
25	Nitai Chand Jena (E)	I
26	Kalipada Dhara (E)	I
27	Sirhari Charan Kuila (E)	I
28	Rashbehari Dhara (E)	I
29	Bidhubhushan Manna (E)	I
30	Gourhari Samanta (E)	II
31	Ramchandra Adak (E)	II
32	Manindranath Nayek (E)	II
	Golapchak U. P.	
34	Prabir Ch. Das (E)	II
36	Janakinath Das	II
38	Purna Chandra Patra (E)	II
	Pana U. P.	
40	Bholanath Samanta (E)	II
41	Chittaranjan Samanta (E)	I
42	Gostabehari Mondal (E)	I
43	Sk. Abdul (E)	I
44	Anil Ch. Kar (E)	II
45	Panchanan Das	II
46	Mahadeb Banerjee	II
47	Nitai Charan Mondal (E)	II
48	Sk. Mansur Ali (E)	II
49	Kishorimohan Das Adhikary (E)	II
50	Sujan Ch. Maity (E)	II
52	Subal Ch. Samanta (E)	II
	Kalikakunda U. P.	
54	Haripada Sonapaty	I
55	Lalitmohan Maity	II
	Kishmat Sibramnagar U. P.	
56	Banabehari Maity (E)	II
57	Syamapada Patra (E)	II
58	Subodh Ch. Hazra	II
59	Santosh Kr. Hazra	II
	Khanjanchak U. P.	
60	Anil Kumar Manna (E)	I
61	Niranjan Maity (E)	II
62	Panchanan Dakua (E)	I
63	Ratneswar Maity (E)	I

Roll No.	Name.	Division.
	Tejnagar U. P.	
64	Indubhushan Das (E)	II
65	Tripurari Debadas (E)	II
68	Bibhutibhushan Patra	II
69	Gostabehari Kalsha (E)	II
	Dwariberia U. P.	
71	Birendranath Mondal (E)	I
72	Ramkrishna Bera (E)	I
73	Niroderanjan Jhulki (E)	II
	Sankarpur L. P.	
76	Gopal Ch. Das	II
	Durgapur U. P.	
78	Sripati Charan Purkait (E)	II
79	Rajendranath Das (E)	II
80	Sk. Aulia Baksh (E)	II
	Barada U. P.	
84	Pramathanath Kuiti (E)	I
85	Haripada Sukul (E)	I
86	Murari Mohan Barik	II
	Bhuya Raichak U. P.	
87	Chittaranjan Tunga (E)	II
	Doro Srikrishnapur U. P.	
89	Sripati Charan Bera (E)	I
90	Tarendranath Bhuya (E)	I
	Raghunathchak U. P.	
91	Sontosh Ch. Bhuya (E)	I
92	Sudhangshu Sekhar Nayek (E)	II
93	Probodh Ch. Barik (E)	II
94	Bibhutibhushan Das Adhikary (E)	II
95	Gosthabehari Barik (E)	II
	Bajitpur U. P.	
96	Rajani Kanta Maity (E)	I
97	Bidhubhushan Maity (E)	I
98	Rasik Ch. Patra (E)	II
99	Nakul Ch. Jana (E)	II
100	Nirode Kanta Nayek (E)	II
	Dharmapur U. P.	
101	Sudhindranath Jhulki (E)	II
102	Dulal Ch. Das (E)	I
103	Nandahari Maji (E)	II
	Krishnagar U. P. Maktab.	
105	Sk. Dedar Ali	II
109	Jamini Bh. Mandal	II
	Shahpur U. P. Maktab.	
111	Mirza Kausar Ali (E)	I
112	Sk. Hafijuddin (E)	II
	Kukrahati U. P. Maktab.	
113	Sk. Matiur Rahman (E)	II
	Bhangagora U. P. Maktab.	
115	Sk. Wajed Ali	II
	Jhikurkhali U. P. Maktab.	
121	Wajed Ali Khan (E)	II
	Manoharpur U. P. Maktab.	
123	Sk. Sabdarali	II
124	Sk. Mansur Ali (E)	II
125	Sk. Mohammad Ali	II
	Mohanpur U. P. Maktab.	
126	Satish Ch. Das (E)	II
127	Anil Ch. Chakravarti	II
	Basulia U. P. Maktab.	
129	Sk. Khoda Buksh (E)	II
130	Sk. Ahmed Ali (E)	II
	Ghasipur U. P. Maktab.	
131	Abdus Sattar (E)	II
132	Anjamannessa	II
133	Janmenjoy De (E)	II
134	Sudhir Ch. Samanta (E)	II
	Jaynagar U. P. Maktab.	
135	Fazlur Rahman Khan (E)	II
136	Sk. Shakerali (E)	II
137	Sk. Abdul Gafur (E)	II

Raghunathbari H. E. School Centre.

	Machinan U. P.	
1	Satishchandra Manna	II
2	Ratankumar Mandal	II
3	Abdul Kader Mallik (E)	II
4	Lutfar Rahaman (E)	II
5	Sadhankumar Chatterjee (E)	II
6	Jalaluddin Mahammad (E)	II
9	Krishna Charan Manna	II
10	Subal Ch. Chakravarty (E)	II
11	Panchanan Pandit (E)	II
12	Nagendra Nath Guchhait (E)	II
13	Bajlar Rahman (E)	II
	Bhordaha U. P.	
16	Gunadhar Maity	II
17	Mahananda De (E)	I
18	Akshay Kumar Manna	II
19	Saik Mahammad Hanif Zamadar (E)	II
22	Ramkrishna Poria	II
	Manoharpur U. P.	
23	Srihari Prasad Panja (E)	I
24	Sachinandan Bhawmik (E)	I
25	Gunadhar Das (E)	I
26	Sital Chandra Khanra (E)	II
27	Prakash Chandra Jana (E)	I
	Kismat Khaira U. P.	
28	Krishna Charan Mandal (E)	I
29	Raj Krishna Manna (E)	I
30	Sudhir Chandra Manna (E)	I
31	Durlabh Chandra Bhunia (E)	II
32	Satyeswar Bari (E)	II
	Rhine Pingalakshi U. P.	
33	Jugalkishor Mukerjee (E)	I
35	Radhikaranjan Ghatak (E)	II
36	Saik Abdul Ohab Ali (E)	II
	Champda U. P.	
37	Kanai Lal Samanta (E)	I
38	Gobinda Charan Ghanta (E)	I
39	Pramatha Nath Bera (E)	II
40	Narayan Chandra Santra	II
	Markandapur Umesh Chandra U. P.	
41	Adya Charan Bhowmik	II
42	Narendra Nath Bera	I
44	Khudiram Samanta	I
45	Gosthabehari Mandal (E)	II

Roll No.	Name.	Division.
	Jasra U. P.	
47	Santosh Kumar Pakhira	II
48	Anil Chandra Bera	II
	Purba Bakulda U. P.	
50	Gosthabehari Samanta	II
51	Paritosh Mandal (E)	II
52	Prabhanjan Kumar Jana (E)	I
54	Krishna Das Bera	II
	Gopimohanpur Saraswat U. P.	
55	Kanai Lal Mana	II
56	Saik Hossain (E)	II
	Misora U. P.	
57	Bholanath Maity (E)	I
58	Satish Chandra Maity	II
59	Probodh Chandra Maity (E)	I
	Mangaldwari Binapani U. P.	
60	Jatindra Nath Kuila (E)	I
61	Panchanan Samanta (E)	I
62	Saik Leyakat Ali (E)	I
63	Saik Jahar Ali (E)	I
64	Saik Khoda Bux (E)	I
65	Sachindra Nath Maity (E)	I
	Dhuliara U. P.	
69	Narayan Chandra Poria (E)	II
70	Kalipada Dandapat (E)	II
	Diglabar U. P.	
72	Haripada Mandal	I
73	Triguna Charan Gharai	II
	Siddhya U. P.	
74	Sital Chandra Bakshi (E)	II
77	Ashutosh Maity (E)	II
79	Kanai Lal Samanta (E)	II
81	Atul Chandra Maity	II
	Gopalganja U. P.	
82	Nityagopal Das Poddar (E)	I
83	Khirod Chandra Manya	I
84	Sudhir Chandra Mandal (E)	I
85	Bijoy Chandra Shee (E)	I
86	Sudhangshu Pramanik	I
87	Sarat Chandra Manya (E)	I
88	Satyeswar Maity	II
89	Bidhubhusan Jana (E)	I
	Jafully U. P.	
90	Sripati Charan Maji (E)	II
91	Suyampada Bera (E)	I
92	Bhim Charan Bar	I
93	Gourhari Bera (E)	II
94	Gunadhar Adak	I
	Kenua U. P.	
95	Kanai Lal Maity (E)	I
96	Sital Chandra Santra (E)	I
97	Gunadhar Maity (E)	II
98	Aswini Kumar Samui (E)	II
99	Gadadhar Das (E)	II
101	Sudhir Chandra Maity	II
102	Satyeswar Poria	II
103	Sudhangshu Sekhar Bhattacharyya	II

Roll No.	Name.	Division.
	B. C. Paul Maliara U. P.	
107	Sudha Krishna Patra (E)	I
108	Babulal Pal	II
109	Atul Chandra Maji	II
111	Kartic Chandra Das (E)	II
112	Debendra Nath Bhunia	II
113	Jagannath Maity (E)	II
114	Bisnupada Maity	II
115	Khudiram Patra	II
116	Bankim Behari Das	II
118	Rai Charan Bhunia (E)	I
	Pulsita U. P.	
119	Anantaram Manna	I
120	Radhashyam Samanta	II
	Bijoynagar U. P.	
121	Satyanarayan Gharai	I
122	Narendra Nath Bera	I
123	Debendra Nath Bera	I
124	Gopal Chandra Sahoo	I
	Harinarayanchak U. P.	
125	Rai Charan Bar (E)	I
126	Amulya Charan Pandit (E)	I
127	Radhashyam Phadikar (E)	I
128	Krishna Chandra Maity (E)	I
129	Prankrishna Bera (E)	I
	Dhuliapur U. P.	
130	Gayaram Mandal	II
	Kishorchak U. P.	
133	Radhanath Maity (E)	II
134	Satyaranjan Manya (E)	II
135	Ramkrishna Samanta (E)	II
136	Sudhir Chandra Kolay (E)	II
	Deriachak No. 1 U. P.	
137	Radhanath Samanta (E)	I
138	Prahlad Chandra Samanta (E)	II
139	Surendranath Adak (E)	II
	Deriachak No. 2 U. P.	
140	Gosthabehari Samanta	II
141	Dwarikanath Hazra	I
142	Sripati Charan Ghara	II
143	Bhuban Chandra Karan	II
	Purbachilka U. P.	
145	Kalipada Bera (E)	I
146	Bisnupada Gajar	II
147	Krishna Chandra Mahapatra (E)	II
148	Debendranath Maity (E)	II
149	Bisnupada Metia (E)	II
150	Narendranath Panja (E)	II
151	Mahadev Metia (E)	II
152	Niranjan Dinda (E)	II
153	Niranjan Samanta (E)	II
154	Madhab Ch. Bhowmik (E)	I
155	Sambhu Charan Maji (E)	II
156	Pramatha Nath Paik	II
157	Atul Krishna Sahoo (E)	II
158	Anil Kumar Samanta (E)	II
161	Sripati Charan Jana (E)	II
	Gogras U. P.	
163	Saik Aminuddin (E)	I
	Debuapukur U. P.	
164	Bhagirath Maji (E)	I
165	Gopal Chandra Mandal (E)	II
167	Surendranath Manna (E)	II

Roll No.	Name.	Division.
	Gourangapur U. P.	
169	Shyamapada Mandal ..	I
171	Khaduram Chitrakar ..	I
	Purusottampur U. P.	
172	Ramapada Mandal (E) ..	I
173	Chandicharan Panja (E) ..	I
174	Sashadhar Gayen (E) ..	I
175	Nagendranath Maity (E) ..	I
176	Nabadwip Chandra Maity (E) ..	I
177	Debendranath Manna (E) ..	I
178	Amulya Charan Santra (E) ..	I
179	Manmathanath Maity (E) ..	I
	Purba Sukutia U. P.	
180	Gosthabehari Ghanta (E) ..	I
181	Ananta Charan Mandal (E) ..	II
182	Babulal Maity (E) ..	II
	Rajhati U. P.	
183	Shripati Charan Choudhuri ..	II
184	Debendranath Bera ..	I
185	Krishna Das Maity ..	I
186	Amulya Chandra Maity ..	II
187	Pramatha Nath Bera ..	I
188	Pasupati Charan Bera ..	I
189	Bankim Chandra Misra ..	I
	Salikagarchak U. P.	
190	Manmathanath Maity (E) ..	II
191	Kalipada Dinda ..	II
192	Rakhal Chandra Bera ..	II
194	Hriday Charan Dhara (E) ..	II
195	Haradhan Mandal ..	II
	Pratappur U. P. Maktab.	
197	Sk. Akram Ali (E) ..	II
198	Bankim Ch. Bhattacharya ..	II
199	Subodh Ch. Das (E) ..	II
202	Sk. Osman Ali ..	II
	Narayan Pakuria U. P. Maktab.	
204	Sk. Sahadat Hossain (E) ..	I
205	Sk. Abdul Zalil (E) ..	II
206	Sk. Abdul Hamid ..	II
207	Sk. Ferajali (E) ..	II
208	Mobarak Ali (E) ..	I
	Dainan U. P. Maktab.	
209	Sajed Ali ..	II
210	Abdur Rajjak ..	II
213	Sanoar Ali ..	II
217	Khairunnesa ..	II
219	Sashi Bhusan Das ..	II
	Jafuli U. P. Maktab.	
221	Satish Ch. Bhaumik (E) ..	I
222	Sk. Abdur Rahman (E) ..	II
223	Hashmat Ali Khan (E) ..	II
224	Sk. Khadem Ali (E) ..	II
	Mohammadpur U. P. Maktab.	
225	Sk. Nuruddin (E) ..	II
227	Sk. Nur Mohammad (E) ..	II
	Chakda U. P.Maktab.	
229	Sk. Shafiur Rahman (E) ..	II
	Kantabani U. P. Maktab.	
232	Abdul Ghani ..	II
	Govindanagar U. P. Maktab.	
250	Sk. Kafayetali ..	II

Roll No.	Name.	Division.
	Babuia U. P. Maktab.	
252	Sk. Hossain Ali (E) ..	I
253	Nurul Anwar (E) ..	II
254	Sk. Yakub Ali (E) ..	II
	Bhogpur U. P. Maktab.	
255	Wajedali Khan (E) ..	II
257	Kunja B. Sahu (E) ..	II
258	Abdul Latif Khan ..	II
	Gogrash U. P. Maktab.	
264	Mafijuddin Khan (E) ..	II
	Ghatal H. E. School Centre.	
	Syamchak U. P.	
1	Hira Lal Panja ..	II
	Fatepur U. P.	
2	Prafulla Kumar Bera ..	II
3	Bejoy Kumar Samanta ..	II
4	Bibhuti Bhusan Adak ..	II
	Sarberia U. P.	
5	Krishnadas Pandit ..	I
6	Satya Narayan Hutait ..	I
7	Kanai Lal Pain ..	II
8	Sudhir Chandra Kar ..	II
9	Kanai Lal Pandit ..	II
	Chak-Boalia U. P.	
10	Bishnuhari Kapash ..	II
11	Basudeb Manna ..	II
12	Subal Chandra Manna ..	I
	Lakshmikundu U. P.	
14	Nanda Lal Bhuia (E) ..	II
15	Madhusudan Manna ..	II
16	Prafulla Kumar Barui ..	II
	Basantapur U. P.	
21	Gouri Sankar Guchait ..	II
22	Haripada Goswami ..	II
	Dari-Ajudhya U. P.	
23	Gostha Bihari Dhara ..	I
24	Baneswar Maity ..	II
25	Madhusudan Maity ..	II
	Ranichak U. P.	
29	Susil Chandra Gharai (E) ..	I
	Chak Chainpat U. P.	
30	Prahlad Chandra Handu ..	I
31	Nandadulal Maji ..	II
32	Kishori Mohan Mandal ..	II
33	Krishna Mohan Manna ..	II
34	Kangal Chandra Shau ..	II
	Tearberia U. P.	
35	Haripada Raut ..	I
	Jote Gobardhan U. P.	
37	Sachinandan Pramanic ..	II
	Kolora Board U. P.	
38	Bhabataran Jana ..	I
39	Gostha Bihari Dinda ..	I
40	Nanda Lal Dey ..	I
41	Niranjan Kumar Mondal ..	I
42	Hare Krishna Maity ..	II

Roll No.	Name.	Division.
	Hatgachia U. P.	
43	Kalipada Gharai	I
44	Ram Chandra Dalui	I
45	Srimati Ashalata Dasi	I
46	Satish Chandra Dey	II
47	Fakir Chandra Ghosh	I
	Polaspai U. P.	
48	Balai Charan Samanta (E)	I
49	Bishnupada Bhukta (E)	I
50	Bibhuti Bhusan Samanta (E)	I
51	Subal Chandra Sil (E)	I
	Bhagabanchak U. P.	
52	Balaram Bera (E)	I
53	Sarat Chandra Maity (E)	II
54	Sital Chandra Khatua	II
55	Gunadhar Mondal	II
	Kaijuri U. P.	
56	Sital Chandra Pandit (E)	I
57	Niranjan Kanta Shau	II
58	Satish Chandra Maity (E)	II
	Mohishghata U. P.	
59	Subal Chandra Saha (E)	I
60	Manick Lal Kundu (E)	I
61	Bhabataran Sil (E)	I
63	Nanda Lal Rana (E)	I
64	Debendra Nath Samanta (E)	I
65	Prabodh Chandra Pal (E)	II
66	Amulya Charan Pal (E)	II
	Khanjapur U. P.	
67	Anadi Charan Kathal (E)	II
68	Kalipada Kathal (E)	I
69	Kanai Lal Sinha Ray (E)	I
70	Sarashipada Chakravarty (E)	II
73	Khagendra Nath Parui (E)	II
74	Dharmadas Dey (E)	II
75	Ramani Mohan Mondal (E)	II
	Madpukur U. P.	
79	Pranbandhu Dhara	II
80	Brindabon Chandra Maji	II
81	Narendra Nath Maji	II
	Chowka U. P.	
84	Kunja Bihari Mondal	I
85	Satish Chandra Maity	II
86	Panchanan Santra	I
88	Prankrishna Samanta	I
89	Nitai Charan Samanta	I
	Nimtala Practising U. P.	
90	Sagar Chandra Jana (E)	I
91	Abhiram Dalal (E)	II
92	Pashupati Dutt	II
93	Sudhir Chandra Bhatta	II
94	Madan Mohan Guin	II
	Irhpala Free.	
95	Sivaprasad Shamui (E)	I
97	Krishna Chandra Kundu (E)	I
98	Nanda Lal Rajak (E)	II
	Syamgunge U. P.	
99	Jahar Lal Dutt	II
	Panna U. P.	
101	Mahadeb Chandra Maji (E)	I
102	Krishnadas Pal (E)	I
104	Subal Chandra Pal (E)	I
105	Basari Mohan Maji (E)	I
	Bhadrakali U. P.	
106	Kishori Mohan Ray (E)	II
	Gambhirnagar U. P.	
109	Narendra Nath Pal	II
	Jote Kanurgarh U. P.	
111	Kanai Lal Bhukta (E)	II
112	Anil Chandra Jana (E)	II
113	Abdur Rahaman Khan (E)	II
	Kaigaria U. P.	
114	Subal Chandra Santra (E)	II
115	Nanda Lal Goswami (E)	II
116	Pyari Mohan Manna (E)	II
117	Ajamil Bhuia (E)	II
118	Pancharam Panja (E)	II
	Basantapur U. P.	
119	Harasankar Guchait	I
120	Durlav Chandra Adhikary	II
	Jagannathpur U. P.	
122	Bimala Charan Patra	I
123	Parbati Nath Pandit	I
	Mungurul U. P.	
124	Kalipada Ghosh (E)	I
125	Ram Rasana Ray (E)	I
	Bhagabantapur U. P.	
127	Haripada Donre	II
128	Ram Gobinda Bapti	I
	Bamunia U. P.	
129	Atul Ch. Ghosh (E)	I
130	Jamini Mohan Mullick (E)	II
131	Radha Raman Pal (E)	II
132	Bhajahari Nayak (E)	II
	Monoharpur Final Maktab.	
133	Shaikh Amanat Ali (E)	I
134	Shaikh Ahmed Ali (E)	II
135	Sk. Azizur Rahman (E)	II
137	Sk. Abdus Sultan (E)	II
	Uttarbarh Final Maktab.	
138	Syed Shamsuzzoha (E)	II
139	Syed Shamser Ali	II
	Kalagachia H. E. School Centre.	
	Tolla U. P.	
1	Satish Chandra Roy (E)	II
2	Rati Kanta Chakravarty (E)	II
3	Chittaranjan Bhattacharja (E)	II
5	Suhrid Ranjan Jana (E)	II
6	Niranjan Das	II
7	Bibhutibhusan Acharja	II
	Tikasi U. P.	
8	Sudhir Chandra Guchait (E)	I
9	Byomkesh Chandra Pradhan (E)	II
10	Kartick Chandra Maity (E)	II
11	Hrishikesh Guchait (E)	I
12	Jharu Charan Bhunja (E)	II
13	Ashutosh Bera (E)	II
15	Sreemati Suvadayeeni Maity (E)	I
16	Sreemati Rajlakshmi Maity (E)	I
	Lakhi U. P.	
17	Giridhari Das	I
18	Samaresh Chandra Bera (E)	II
19	Bhudeb Chandra Misra	I
20	Bhudeb Chandra Das	I

Roll No.	Name.	Division.
	Nayachara U. P.	
21	Jagadish Chandra Panda (E) ..	I
	Tikashipurbachara U. P.	
22	Bhubon Chandra Das (E) ..	I
23	Hrishikesh Das (E) ..	II
25	Bhupen Chandra Maity (E) ..	II
	Utterkalandan U. P.	
26	Sudhir Chandra Samanta (E) ..	I
27	Rakhal Chandra Hazra (E) ..	II
	Bajbaj U. P.	
29	Ashutosh Bera (E) ..	II
31	Dhananjoy Bera (E) ..	II
	Garhbari U. P.	
32	Ananta Kumar Panda (E) ..	II
	Begunabari U. P.	
36	Nakul Chandra Sahu ..	II
37	Jogindra Nath Nazir ..	II
	Kakhuriabari U. P.	
38	Parameswar Sit (E) ..	I
	Baghadari U. P.	
40	Purna Chandra Dey (E) ..	II
41	Aswini Kumar Maity (E) ..	II
42	Bhabesh Chandra Sahu (E) ..	II
44	Jagadish Chandra Jana (E) ..	I
46	Srinibash Chandra Giri (E) ..	II
47	Amulya Kumar Maity (E) ..	II
48	Nagendra Nath Pradhan (E) ..	I
49	Atul Chandra Pradhan (E) ..	I
50	Ganesh Chandra Jana (E) ..	II
51	Promotha Nath Maity (E) ..	II
52	Sitaram Patra (E) ..	II
53	Ananta Kumar Bayin (E) ..	II
	Madhakhali U. P.	
54	Bankim Chandra Giri ..	II
56	Byomkesh Maity ..	II
57	Gunadhar Das ..	I
58	Sunil Chandra Maity ..	II
	Ikshupatrika U. P.	
59	Ananta Kumar Das ..	II
60	Rakhal Chandra Sow ..	II
	Jukhia U. P.	
62	Ananta Kumar Shee ..	II
63	Ashutosh Gochait ..	II
64	Sreemati Menaka Sundari Sasmal ..	I
	Sitadighi U. P.	
65	Paresh Nath Jana ..	II
	Disimulia U. P.	
67	Jogendra Nath Samanta ..	I
68	Ashoke Kumar Paria (E) ..	II
	Arjunnagar U. P.	
70	Saranon Sow (E) ..	I
71	Tarapada Panda ..	II
	Amjadnagar U. P.	
77	Seikh Rahamatali (E) ..	I
78	Phanibhushan Dutta (E) ..	I
79	Suresh Chandra Maity (E) ..	I

Roll No.	Name.	Division.
	Bansgora U. P.	
81	Ananta Kumar Sow (E) ..	I
82	Jhareswar Jana (E) ..	II
83	Basanta Kumar Pattra (E) ..	II
85	Nalini Kanta Pattra (E) ..	II
	Jahanabad U. P.	
86	Satish Chandra Maity (E) ..	II
87	Jagannath Mondal (E) ..	II
	Chingordonia U. P.	
88	Binoy Bhusan Bera (E) ..	II
92	Sreemati Baradabala Panda (E) ..	I
93	Niranjan Panda (E) ..	II
	Kultha U. P.	
94	Sudhir Chandra Pradhan (E) ..	I
96	Sudhir Chandra Pattra (E) ..	II
97	Paharali Khan (E) ..	II
	Dekhali U. P.	
99	Hemanta Kumar Das (E) ..	II
100	Ram Gopal Dasadhikari (E) ..	I
101	Rabindra Nath Kar (E) ..	II
103	Sudhir Chandra Panda (E) ..	I
	Gholabar U. P.	
104	Pashupati Charan Das (E) ..	I
105	Sudhanshu Sekhar Jana (E) ..	II
107	Sreemati Radharani Das (E) ..	II
108	Seikh Esakali ..	II
	Amjadnagar U. P.	
109	Bankim Chandra Jana (E) ..	I
110	Gobardhan Bera (E) ..	I
111	Eshitap Khan (E) ..	I
112	Gunadhar Bhunia (E) ..	I
	Jagannathchak U. P.	
113	Achintya Kumar Giri (E) ..	I
114	Sudhanshu Sekhar Jana (E) ..	II
115	Banabehari Bera ..	II
116	Prafullya Kumar Khatua ..	II
117	Sudhanshu Sekhar Pal ..	II
118	Sudhir Chandra Bar (E) ..	I
119	Sreemati Baidehi Sundari Adak (E) ..	II
120	Sreemati Nanibala Bera ..	II
	Kamdebnagar U. P.	
121	Monmathanath Das (E) ..	I
122	Jyotish Chandra Barik (E) ..	I
123	Kedar Chandra Maity (E) ..	I
124	Satyaprokash Maity (E) ..	II
125	Aswini Kumar Maity (E) ..	I
126	Gopal Chandra Maity (E) ..	I
127	Nagendranath Shee (E) ..	I
128	Braja Gopal Das (E) ..	I
129	Khudiram Pundit (E) ..	I
130	Sreemati Sailabala Jana (E) ..	I
	Ramchak U. P.	
131	Krishna Prosad Das (E) ..	I
132	Sreehari Charan Das (E) ..	II
133	Prankrishna Das (E) ..	II
135	Nagendranath Mura (E) ..	I
136	Abinash Chandra Mondal (E) ..	II
137	Jagadish Chandra Bhumia ..	II
	Sillaberia U. P.	
138	Ram Narayan Bera (E) ..	II
139	Amulya Kumar Mondal (E) ..	I
140	Sukumar Chandra Das (E) ..	II

Roll No.	Name.	Division.
	Pankhai U. P.	
141	Atul Chandra Ojha (E)	II
142	Monmotha Kumar Jana	II
143	Sreemati Niharika Maity	II
144	Kiran Chandra Mondal	II
	Ajanbari U. P.	
148	Paresh Chandra Das (E)	II
149	Ajit Kumar Khatua (E)	I
150	Bhudeb Chandra Khatua (E)	II
152	Rakhal Krishna Barik (E)	II
	Panikha U. P.	
156	Niranjan Das (E)	II
157	Sreemanta Kumar Das (E)	II
158	Pulinbehari Purkait (E)	II
	Kunjapur U. P.	
161	Purna Chandra Das	II
	Garania U. P.	
162	Jagadish Chandra Khatua (E)	II
	Serkhanchak U. P.	
165	Niranjan Kumar Das	II
166	Naresh Chandra Maity	II
	Chaturbhujchak U. P.	
167	Jamini Kumar Mondal (E)	II
168	Atul Chandra Das (E)	II
170	Byomkesh Manna	II
171	Profulla Kumar Karan	II
172	Dhirendranath Das (E)	II
	Jagannathchak U. P.	
173	Khudiram Bera	II
174	Adhar Chandra Bera	II
	Amarshi G. T. School Centre.	
	Amarshi Practising U. P.	
1	Bibhuti Bhusan Pramanik	I
2	Kenaram Jana	II
3	Bhusan Chandra Maity	II
5	Bhanu Charan Das	I
6	Surendranath Duari	I
	Dhusurda Board U. P.	
8	Sasanka Sekhar Maity	I
	Srirampur U. P.	
9	Chowdhuri Charan Maity (E)	II
10	Shyamacharan Dwivedi (E)	II
11	Bhupati Charan Das (E)	I
12	Hiralal Pradhan (E)	II
13	Gorachand Kar (E)	I
14	Arjun Chandra Bar (E)	II
15	Chaitanya Charan Bhuian (E)	I
16	Balaram Kar (E)	I

Roll No.	Name.	Division.
	Palpara U. P.	
17	Kalipada Maity (E)	I
18	Nagendranath Maity (E)	I
19	Bhutnath Maity (E)	I
20	Niranjan Maity (E)	I
21	Tarapada Sahoo (E)	II
22	Naba Kanta Chakraverty (E)	I
23	Sajani Kanta Santra (E)	I
24	Gobinda Charan Bera (E)	I
25	Birendranath Mahapatra (E)	I
26	Hari Charan Sahoo (E)	II
27	Surendra Nath Samanta (E)	I
28	Bhakta Charan Das Adhikary	II
29	Sudhir Kumar Kar (E)	I
30	Rajib Lochan Misra (E)	I
31	Dhirendranath Bhuian (E)	I
32	Hemanta Kumar Kotal (E)	I
33	Premchand Maity (E)	I
34	Laxmi Kanta Kar (E)	II
35	Basanta Kumar Jana	II
	Sardabarh U. P.	
36	Mohini Bala Mal (E)	I
37	Arun Chandra Das (E)	I
39	Nanda Kumar Patra (E)	I
40	Shub Chand Manna (E)	II
41	Atul Krishna Jana (E)	I
42	Bholanath Das (E)	I
43	Murari Mohan Das	II
	Fazilpur Kamini Sundari U. P.	
44	Gajendranath Maity	II
45	Bhupati Nath Maity (E)	II
46	Bhuban Chandra Jana (E)	II
	Brajaballavpur U. P.	
47	Kedar Nath Ghorai (E)	II
	Gopalsingpur U. P.	
57	Shashi Bhusan Bar (E)	II
58	Sharat Chandra Samanta	II
59	Satish Chandra Kuila (E)	II
60	Bhusan Chandra Jana (E)	II
61	Bhupati Charan Roy	II
	Balyagovindapur U. P.	
62	Bipin Bihari Jana (E)	II
64	Ajit Kumar Roy (E)	I
65	Dharanidhar Giri	II
	Argoal U. P.	
66	Shashabinda Ponda	II
67	Mrityunjay Acharyya	II
68	Tarendranath Mal	II
69	Biswesswar Acharyya	II
70	Saraswati Pahari	I
	Naipur U. P.	
71	Rash Behary Maity	II
	Bankibheri U. P.	
73	Jatindra Nath Mahapatra (E)	II
74	Giridhari Samanta (E)	II
76	Nandalal Patra (E)	II
	Shoulabheri U. P.	
77	Gadadhar Maikap	II
78	Bijoy Krishna Maity (E)	II
80	Atul Chandra Bera	II
	Chakkandi U. P.	
81	Sudhir Kumar Jana (E)	I
82	Amulya Charan Bhanja (E)	II
84	Rajendranath Bera (E)	I
	Khar U. P.	
85	Barendranath Mahanty (E)	II

Roll No.	Name.	Division.
	Bhairabdanri U. P.	
90	Bhagawan Chandra Bera	I
91	Gobardhan Shaw	II
	Gokulpur U. P.	
92	Ananta Kumar Das	II
	Borboria U. P.	
94	Gunadhar Maity	I
95	Gadadhar Samanta	I
96	Chintamoni Bera	II
	Sukhakola Mallikpur U. P.	
97	Upendranath Maity (E)	II
100	Sukh Chand Maity (E)	II
101	Ananta Kumar Bera (E)	II
	Satsatamal U. P.	
106	Surendranath Ghorai	II
	Sadatpur U. P.	
107	Anil Kumar Karan	I
108	Bihari Lal Maity	II
109	Nagendranath Maity	II
110	Jagannath Maity	II
111	Ananta Kumar Maity	II
112	Bhutanath Jana	II
	Purba Amarshi U. P.	
113	Bibhuti Bhusan Maity	II
114	Umapada Samanta (E)	I
115	Mahadev Maity (E)	I
	Barakumarda U. P.	
117	Rakhal Chandra Pahari	II
	Satsanda U. P.	
118	Manmathanath Rana	II
119	Phanibhushan Samanta (E)	II
120	Kumed Charan Rana	II
121	Sarbeswar Giri (E)	I
	Haridangar U. P.	
122	Haradhan Panda	I
123	Niranjan Patra	II
124	Khagendra Santra	II
126	Harekrishna Das	I
127	Hiralal Bera	II
	Haridrageria U. P.	
128	Phanibhusan Nanda	I
129	Hemanta Kumar Ghanta	I
130	Pitambar Ghanta	II
	Mathura U. P.	
131	Upendranath Maity	I
132	Maheswar Das	II
133	Narendranath Das	II
	Tapinda U. P.	
136	Bhanu Shekhar Ghorai	II
	Majna U. P.	
144	Janakiballav Das Mahapatra (E)	II
146	Barendranath Das (E)	I
147	Kedarnath Gir (E)	II
	Brojakishorpur U. P.	
148	Hiralal Maity	II
149	Narendranath Maity	II
	Bhagwanpur U. P.	
150	Satish Chandra Das	II
151	Probodh Kumar Mahapatra (E)	I
	Kalmaghat U. P. Maktab.	
154	Kaosarali Khan	II
155	Satyeshwar Das	II

Mahisadal Raj H. E. School Centre.

	Purba-Srirampur U. P.	
1	Hrishikesh Mahapatra (E)	II
2	Jatindra Nath Mandal (E)	II
	Panisiti B. N. U. P.	
5	Gourhari Ghorai (E)	I
6	Sudhir Chandra Samanta (E)	II
7	Keshabananda Sahoo (E)	II
	Kapasaria U. P.	
8	Prabhat Chandra Tung (E)	II
9	Haripada Tung (E)	I
10	Mukanda Mohan Bera (E)	I
	Muhammadpur U. P.	
11	Hemapada Kulia (E)	I
12	Sudhansu Sekhar Maity	II
13	Sudhir Chandra Bera (E)	I
14	Birendra Nath Chakrabarty (E)	I
15	Hiralal Maity (E)	II
16	Khudiram Maity (E)	II
17	Iswar Chandra Bera (E)	II
	Keshabpur R. N. U. P.	
18	Haripada Ghora (E)	II
19	Hrishikesh Ghosh (E)	I
20	Panchanan Dalapati (E)	II
21	Janardan Pradhan (E)	II
22	Shaikh Ashu (E)	II
23	Panchanan Mandal	II
	Gopalganj U. P.	
24	Jnanendra Nath Misra (E)	I
25	Kshirod Chandra Bhowmik	II
26	Balai Chandra Bera	II
27	Kumud Bandhab Bhunia	II
28	Khudiram Samoi (E)	I
29	Sudhansu Sekhar Gajendra Mahapatra (E)	II
30	Sreemati Kamala Bala Debi	II
31	Prahlad Chandra Betal (E)	II
32	Ramani Kanta Samanta	II
33	Rohini Nandan Goswami (E)	II
	Babalpur U. P.	
34	Nishi Kanta Karan (E)	II
	Kalyanpur Chandreswar U. P.	
37	Satis Chandra Jana (E)	I
38	Sasanka Sekhar Manna (E)	I
39	Dolgobinda Das (E)	II
	Bagdoba Jalpai U. P.	
40	Susil Kumar Nayak (E)	I
41	Kshudiram Samanta	II
42	Badal Chandra Nayak (E)	II
43	Hiralal Maity (E)	II
44	Sripati Charan Samanta	II
	Uttar Kasimnagar U. P.	
46	Gopal Chandra Bhattacharya (E)	I
47	Prakritiprasad Bag (E)	I
48	Satyaprasad Hazra (E)	II

Roll No.	Name.	Division.
	Basulia U. P.	
49	Prafulla Kumar Maity (E)	I
50	Manindra Nath Das	II
51	Baneswar Misra (E)	I
52	Mukunda Mohan Bera (E)	II
	Basudebpur U. P.	
53	Satis Chandra Bera (E)	I
55	Chaitanya Charan Bera	II
56	Kamala Kanta Bag	II
57	Kalipada Betal (E)	II
58	Sudhir Chandra Samanta	II
	Khanchi U. P.	
60	Bishnuhari Jana (E)	I
61	Haripada Bhunia, No. 1 (E)	I
62	Rajanikanta Maity	II
63	Gopal Chandra Mavoi	I
64	Ananta Ram Das	I
65	Susil Ranjan Adak (E)	II
67	Mahadev Bera (E)	II
68	Rasik Chandra Jana	I
69	Gourhari Das	I
70	Basanta Kumar Mana	II
71	Haripada Bhunia, No. 2	II
	Rajarampur U. P.	
73	Manmatha Nath Santra (E)	I
74	Narayan Chandra Bera	II
75	Atul Chandra Samanta	II
	Dakshin Gumai U. P.	
76	Susil Chandra Kar (E)	I
77	Anil Chandra Kar	II
78	Upendra Nath Das	II
79	Jatindra Nath Hazra (E)	I
80	Dhananjoy Maity (E)	II
81	Madhab Chandra Bag (E)	II
	Ainoghata (Jhowpatra) U. P.	
82	Haripada Guchhait (E)	II
83	Khagendranath Betal (E)	II
84	Charu Chandra Samanta	I
85	Hemanta Kumar Pati	II
86	Niranjan Kumar Samanta (E)	II
87	Lakshman Chandra Kar (E)	II
88	Kishori Mohan Bera (E)	II
90	Dhirendra Nath Guchhait	I
91	Tarendra Nath Betal	II
	Kalyanpur Chandreswar U. P.	
92	Radhanath Manna	II
	Naradari U. P.	
93	Amulya Charan Maji (E)	I
94	Kangal Chakravartty (E)	II
95	Sudhir Chandra Samanta (E)	II
96	Hari Charan Rana (E)	I
97	Tulsi Charan Maji (E)	II
98	Ramgobinda Bhattacharya (E)	II
99	Sajani Kanta Dinda (E)	II
100	Panchanan Bhunia (E)	I
101	Chandi Charan Bhunia (E)	II
102	Ardhendu Sekhar Samanta (E)	II
	Bahinchberia Board U. P.	
104	Sudhansu Sekhar Bhunia	I
106	Manik Chandra Das (E)	I
107	Ananta Ram Chakravarty	II
108	Prafulla Kumar Maji	II
109	Bishnupada Bhunia	II
110	Kalipada Chakravartty (E)	II
	Taluk Kamalpur Sitala U. P.	
111	Harekrishna Mandal (E)	I
112	Amulya Charan Bhowmik (E)	I
113	Sudhir Chandra Adak	II
114	Prabhakar Porua (E)	II
115	Kartik Chandra Adak (E)	I

Roll No.	Name.	Division.
	Kalyanpur U. P.	
116	Sudhangsu Sekhar Mukhopadhyay (E)	II
117	Sasibhusan Das (E)	II
118	Surendra Nath Mandal (E)	I
119	Phanibhusan Ghosh (E)	II
120	Satis Chandra Kuila (E)	II
121	Ananta Ram Dinda (E)	I
122	Manmatha Nath Guchhait (E)	II
	Uttar Kasimnagar U. P.	
123	Manmatha Nath Karan (E)	II
	Rajnagar Board U. P.	
124	Atul Chandra Daloi	II
	Taluk-Gopalpur U. P.	
125	Kshudiram Sahoo (E)	I
126	Bishnupada Maity (E)	I
127	Satis Chandra Maity (E)	I
128	Anilbaran Sow (E)	II
129	Harekrishna Samanta (E)	I
130	Profulla Kumar Samanta	II
	Kakurda Rudranarayan U. P.	
131	Murari Mohan Jana (E)	I
132	Twaritapada Pati (E)	II
133	Radhanath Jana (E)	I
134	Tarakosh Raj Pandit (E)	II
135	Raicharan Chakravartty (E)	II
	Chak-Simulia Nilambar U. P.	
136	Gangadhar Paroi (E)	I
137	Manindra Nath Samanta (E)	I
138	Bhima Charan Roy (E)	I
140	Gobinda Chandra Maji (E)	II
	Geonkhali U. P.	
144	Nagendranath Das (E)	II
	Lakshya U. P.	
146	Sudhir Ch. Samanta	II
	Dakshinchak U. P.	
149	Kishorimohan Dhara (E)	II
151	Bhabataran Pal (E)	II
	Mahisadal H. E. School Centre.	
	Sreedharpur U. P. Maktab.	
154	Osman Ghani (E)	II
156	Khurshod Ali (E)	I
	Kanchanpur U. P. Maktab.	
158	Abdul Maabud Mallik (E)	II
159	Sk. Wasiur Rahman (E)	II
160	Sk. Muzibur Rahman (E)	II
161	Amulya Ratan Khansama (E)	II
	Chakdipa M. E. School Centre.	
	Brojolalchak U. P.	
1	Sudhir Ch. Jena (E)	I
2	Profulla Kumar Dhara (E)	II
3	Prafulla Kumar Samanta (E)	I
4	Bhimacharan Guchait (E)	II
5	Subol Ch. Guchait (E)	II
6	Lalitmohan Das (E)	II

Roll No.	Name.	Division.
	Barsantanchak U. P.	
7	Bibekananda Pal (E)	I
8	Nirad Kanta Das (E)	I
9	Saibyasachi Bera (E)	II
10	Kalikrishna Bhuya	II
11	Manmathanath Parua (E)	I
12	Surendranath Gorai (E)	II
13	Sripaticharan Dolai (E)	I
	Barsuklalchak U. P.	
14	Fazloor Rahman Khan (E)	I
15	Sk. Manajuddin (E)	I
16	Rajkrishna Das (E)	I
17	Nanigopal Maity (E)	II
19	Shyamsundar Das (E)	II
	Barbasudebpur U. P.	
20	Sudarshan Bhuya (E)	II
21	Anil Kumar Bhuya (E)	II
22	Sudhir Ch. Jena (E)	II
23	Srecmati Subodhbala Bag	I
	Barbajitpur U. P.	
24	Basanta Kumar Das (E)	I
25	Kishorimohan Bona (E)	I
26	Sudhir Ch. Sahoo (E)	II
27	Pearymohan Sahoo (E)	I
28	Khelaram Maji (E)	II
29	Sudhir Ch. Bera (E)	II
30	Bhimacharan Misra	II
31	Satish Ch. Das	II
	Radhakantachak U. P.	
32	Sasankasekhar Naskar	II
33	Himangshu Sekhar Haldar	II
35	Lakshminarayan Dey (E)	II
	Ramsundarchak U. P.	
36	Benoykrishna Parui (E)	II
37	Birendranath Maity (E)	II
	Barsundara U. P.	
38	Hrishikesh Panja (E)	II
39	Mrigendranath Samanta (E)	II
41	Birendranath Gomta (E)	II
42	Rajanikanta Mondal (E)	I
	Bar Uttar Hingli U. P.	
44	Nishikanta Roy (E)	II
45	Jaminibhusan Das (E)	II
46	Syamsundar Baitalik (E)	II
47	Asutosh Ghora (E)	I
49	Hrishikesh Das (E)	II
51	Sadananda Maji (E)	II
52	Santoshkumar Das (E)	I
	Hatiberia U. P.	
54	Jaminikanta Paik (E)	II
55	Hrishikesh Das	I
56	Amulyacharan Maity	II
	Gewadab U. P.	
57	Santoshkumar Jana	I
58	Satish Ch. Maji	I
59	Nanigopal Maji	II
60	Ghanasyam Bhuya	II
	Gunia-Barabari U. P.	
62	Surendranath Pradhan (E)	I
63	Dhananjay Baital (E)	II
64	Hrishikesh Guchait (E)	I

Roll No.	Name.	Division.
	Bhagwanpur H. E. School Centre.	
	Abasberia U. P.	
1	Sripaticharan Maity (E)	I
2	Harekrishna Bhuian (E)	II
3	Paresh Chandra Bera (E)	II
4	Panchanan Pramanik (E)	II
5	Rakhal Chandra Jana (E)	II
	Kazichak U. P.	
6	Manaranjan Khatua (E)	I
7	Kshudiram Khatua (E)	II
	Manaharpur U. P.	
10	Dhirendra Nath Nayak (E)	I
11	Basanta Kumar Mandal	II
12	Pulin Bihari Mandal (E)	II
13	Gayaram Bhuian	II
14	Bishnuhari Ghorai (E)	II
15	Manmatha Nath Maity (E)	I
	Barbasudebpur U. P.	
17	Asutosh Misra	I
18	Kunja Bihari Maity	II
19	Asutosh Maity	II
20	Binod Bihari Jana	I
	Goorgram U. P.	
21	Satish Chandra Jana (E)	I
22	Bhupati Charan Mandal (E)	I
23	Haradhan Kar (E)	I
	Satupur U. P.	
24	Basanta Kumar Das	II
25	Anadicharan Giri	II
26	Abinash Ch. Ghorai	II
	Ektarpur U. P.	
30	Bhupendra Nath Manna	II
	Durgapur U. P.	
31	Abdul Aziz Khan (E)	I
32	Mujibar Rahman Mallic (E)	II
33	Kefaitulla Mallic (E)	II
34	Basanta Kumar Das Mahapatra (E)	II
35	Bijoy Krishna Samanta (E)	II
	Alukaranbarh U. P.	
36	Trilochan Kulia	II
38	Jnanada Charan Pradhan	II
39	Srimati Surabala Maity	II
	Dakshin Patherberia U. P.	
40	Dhirendra Nath Mandal (E)	II
41	Nimai Chand Das (E)	II
42	Khagen Chandra Kar	II
43	Dwijendra Nath Mandal (E)	II
44	Jnanendra Nath Mandal (E)	I
	Machunan U. P.	
45	Dhirendra Nath Jana (E)	I
46	Radhashyam Maity (E)	II
47	Kshudiram Khatua (E)	II
48	Dhananjoy Khatua	II
49	Purna Chandra Sahoo (E)	I
50	Nandalal Mahesh (E)	I
51	Bimal Chandra Das (E)	II
52	Kumari Saudamini Adak (E)	I
	Durbachatri U. P.	
56	Phani Bhusan Maity	I
58	Purnendu Kanta Bar	I
	Jalibishnupur U. P.	
59	Gobinda Prosad Maity (E)	I
60	Rampada Ghorai (E)	I

Roll No.	Name.	Division.
	Kotbarh U. P.	
61	Narayan Ch. Mahapatra (E) ..	II
	Paschimbar U. P.	
63	Debendra Nath Maity ..	II
64	Subodh Ch. Adak ..	II
	Mahammadpur U. P.	
66	Biswanath Manna (E) ..	I
67	Sarat Chandra Majee (E) ..	II
68	Sadananda Misra (E) ..	II
	Kunjapura U. P.	
69	Dwijapada Maity (E) ..	II
70	Niranjan Maity (E) ..	I
71	Jiban Krishna Das (E) ..	I
72	Hemanta Kumar Dinda (E) ..	II
	Kotlouri U. P.	
73	Hemanta Kumar Kar (E) ..	I
74	Jagadish Ch. Bhatta ..	I
75	Adhar Chandra Bera (E) ..	I
76	Bishnupada Chakravarty (E) ..	I
77	Amulya Charan Prodhan (E) ..	I
78	Brindaban Maity (E) ..	II
79	Dhirendra Nath Jana (No. I) (E) ..	II
80	Dhirendra Nath Jana (No. II) (E) ..	I
81	Bhikan Chandra Ghorai (E) ..	I
82	Atul Chandra Bhoje (E) ..	II
83	Sachindra Nath Bhoje (E) ..	II
84	Srimati Grihalakshmi Chandra (E) ..	I
	Khojurashi U. P.	
85	Asutosh Das ..	I
87	Parameswar Manna ..	II
	Barbaria U. P.	
88	Sudhir Ch. Jana (E) ..	I
92	Atul Chandra Maity (E) ..	II
93	Srimati Parimal Bala Maity (E) ..	II
94	Sripati Charan Adak (E) ..	II
95	Pasupati Bar (E) ..	II
96	Titaram Mandal (E) ..	II
	Beundia U. P. Maktab.	
97	Sk. Kasimuddin (E) ..	II
99	Sk. Alauddin (E) ..	II
	Lalpur U. P. Maktab.	
102	Sk. Fazlul Huq (E) ..	II
103	Sk. Rohajuddin (E) ..	II
	Sarberia U. P. Maktab.	
107	Sk. Shafiuddin (E) ..	I
109	Kshitish Ch. Manna (E) ..	II
	Moyna Peddie H. E. School Centre.	
	Hamiruddin Chak U. P. Board.	
2	Khudiram Bar (E) ..	II
4	Phanindranath Das (E) ..	II
	Sridharpur U. P.	
5	Tikadhar Jana ..	II
6	Radhanath Maiti ..	II
7	Ekadasi Guchait ..	II

Roll No.	Name.	Division.
	Ramchandrapur U. P.	
8	Vishnupada Samanta (E) ..	I
9	Babulal Ghara (E) ..	II
10	Annadacharan Acharya (E) ..	II
11	Dhirendranath Sabud (E) ..	II
12	Manmathanath Utthasini (E) ..	I
14	Abinashchandra Ghara (E) ..	I
15	Abinashchandra Mandal (E) ..	II
16	Titaram Maiti (E) ..	II
17	Nirapada Sabud (E) ..	II
18	Srikrishna Charan Samanta (E) ..	II
20	Sadaychandra Bera ..	II
23	Gunadhar Samanta (E) ..	II
	Kearana U. P.	
24	Radhagobinda Roy ..	I
25	Gosthabehari Maiti ..	I
26	Anantaram Panda ..	I
	Ramchak U. P.	
27	Jatindranath Das (E) ..	I
28	Srikanta Das ..	I
29	Prahladcharan Das ..	I
	Kalagachia U. P.	
30	Patitpaban Maiti (E) ..	I
31	Satischandra Mandal (E) ..	II
32	Kishorilal Pramanik (E) ..	II
33	Mrityunjoy Das (E) ..	II
	Chongrachak U. P.	
34	Prahladchandra Das (E) ..	I
35	Jagannath Das (E) ..	I
36	Ratneswar Manna (E) ..	I
37	Chaitanyacharan Das (E) ..	II
39	Sudhakrishna Das (E) ..	I
40	Bibhuti Bhusan Maiti ..	II
41	Surendranath Adhikary ..	II
43	Govindaprasad Das (E) ..	II
44	Manmothanath Choudhury (E) ..	II
46	Bankimbehari Maiti (E) ..	II
47	Harekrishna Jana (E) ..	II
	Kalikadari U. P.	
48	Hrishikesh Chanak (E) ..	I
	Dakshinchongrachak U. P.	
49	Sachindranath Bera (E) ..	I
50	Kshirod Chandra Maji (E) ..	II
51	Nirodecharan Maji (E) ..	II
52	Narendranath Barai (E) ..	II
	Masamchak U. P.	
53	Basudev Bhowmik ..	II
54	Surendranath Ghorai ..	II
	Tilkhoja U. P.	
55	Jnanendranath Bhowmik (E) ..	II
56	Manindranath Kar (E) ..	II
57	Surendranath Maiti, No. 1 (E) ..	II
58	Surendranath Maiti, No. 2 (E) ..	II
59	Kanailal Nayak (E) ..	II
	Bakcha U. P.	
60	Sudhirchandra Bar (E) ..	I
61	Gajendranath Mal (E) ..	II
62	Beharilal Mandal (E) ..	I
63	Sm. Matangini Bhanja (E) ..	
	Laluagerya U. P.	
64	Sudhir Chandra Maiti ..	II
65	Sambhupada Mandal ..	II
66	Adharchandra Dalapati (E) ..	II
67	Shaikh Md. Abul Kalam (E) ..	II
	Donachak U. P.	
69	Atalbehari Sen Gupta (E) ..	II
70	Hrishikesh Roy (E) ..	II

Roll No.	Name.	Division.
	Radhaballvchak U. P.	
71	Vishnupada Mandal	I
72	Nrisinhamurari Hatai (E)	I
73	Babulal Mandal (E)	II
	Monokhali U. P.	
74	Bankimbehari Das (E)	I
75	Harekrishna Samanta (E)	I
	Anandapur U. P.	
76	Vishnupada Maiti (E)	I
77	Kanailal Bera (E)	I
78	Murarimohan Pal (E)	I
79	Haripada Guchait (E)	I
80	Bibhutibhusan Maiti (E)	I
81	Dhananjoy Maiti (E)	I
	Gokulnagar U. P.	
82	Bhusanchandra Manna	II
83	Kalipada Pharas (E)	I
84	Ramkrishna Pramanik (E)	II
85	Saratchandra Adak	II
	Garmayna U. P.	
86	Pareshchandra Bera (E)	I
87	Sudhirchandra Santra (E)	I
	Srikantha U. P.	
88	Jatindranath Mandal (E)	II
89	Jagadish Chandra Samanta (E)	I
90	Amalkumar Pradhan (E)	I
91	Byomkesh Pattanayak (E)	I
	Chongrabagisha U. P.	
92	Panchanan Jana (E)	I
93	Pasupati Mandal (E)	I
94	Baneswar Acharya (E)	I
95	Nikunjabehari Maji (E)	I
96	Pramathanath Samanta (E)	I
	Deuli U. P.	
97	Syamapada Pal (E)	I
98	Haripada Santra (E)	I
99	Dhirendranath Maiti (E)	I
100	Benimadhab Maiti (E)	II
101	Vishnupada Das Adhikary (E)	II
102	Bhusanchandra Karan (E)	I
103	Gobardhan Kapat (E)	II
	Bhanderchak U. P.	
104	Asitbaran Manna (E)	I
105	Basudev Samanta (E)	I
106	Balaram Maiti (E)	II
	Banki U. P.	
107	Ramchand Maiti	I
108	Atul Chandra Maiti	II
109	Sripati Charan Jana	I
110	Pares Nath Maiti	I
	Sudampur U. P.	
111	Sarat Chandra Samanta (E)	I
112	Khudiram Jana (E)	I
113	Gayagobinda Guchait (E)	II
114	Khudiram Khara (E)	II
115	Pasupati Charan Mandal (E)	II
117	Gayaram Samanta (E)	II
	Dangisai D. Mayna U. P.	
118	Bibhuti Charan Jana (E)	II
119	Shaikh Abed Ali (E)	II

Roll No.	Name.	Division.
	Purnadakshin Mayna U. P.	
120	Rakhal Chandra Das (E)	II
121	Bhagabat Charan Mandal (E)	I
122	Kartic Chandra Panja (E)	II
123	Sarada Charan Nayak (E)	II
124	Khudiram Das (E)	II
125	Jnanendranath Sahu (E)	II
	Dakshinharkuli U. P.	
128	Harihar Roy (E)	II
129	Gorachand Bhowmik (E)	II
	Arangkearana U. P.	
130	Niranjan Mandal (E)	I
131	Rashbehari Samanta (E)	I
132	Girish Chandra Das (E)	I
133	Manindranath Pramanik (E)	I
134	Dhirendranath Acharya (E)	I
135	Gobardhan Jali (E)	I
	Jaigirchak U. P.	
136	Jogendranath Ghata	I
137	Kunjabehari Jana (E)	I
138	Priyanath Maiti	II
	Kachichak U. P.	
139	Surendranath Maiti (E)	I
	Shyamsundarpur Board U. P.	
140	Rajendra Nath Roy	I
141	Nirmal Kumar Maity (E)	I
142	Nirod Baran Mandal	I
143	Ekadashi Pradhan	I
	Balisita Board U. P.	
145	Kishori Mohan Maity (E)	I
146	Debendra Nath Maicap	I
147	Amulya Kumar Maity (E)	I
148	Jatindra Nath Samanta	I
	Bhemua U. P.	
149	Saikh Setar Bakash (E)	I
150	Gouranga Charan Maity	I
151	Subodh Chandra Das (E)	I
152	Tarini Mohan Das (E)	I
153	Atul Chandra Dey	II
154	Bijoy Kumar Dey	II
	Kishorepur.	
155	Ram Pada Pal (E)	I
156	Amulya Ratan Chowdhury	I
157	Panchanan Mandal	I
158	Manindra Nath Maity	II
	Bargoda U. P.	
159	Kshudiram Mantri (E)	II
160	Taritprabaha Maity (E)	II
161	Bibhuty Bhusan Mandal (E)	II
	Bargoda Jalpai U. P.	
162	Murari Mohan Maity	I
163	Satya Kumar Bera	II
	Chingurdona U. P.	
165	Amulya Charan Maity (E)	I
	Nizzot Garupota U. P.	
167	Bhaja Hari Das	I
168	Haripada Kola	II
169	Kailash Chandra Jana	II
170	Nibash Ch. Bar	II
171	Rajani Kanta Kola	II
172	Haripada Das	II

Roll No.	Name.	Division.
	Srirampur No. 1 U.P.	
173	Radhanath Adhikari	I
174	Ramkrishna Adhikari	I
175	Kishori Mohan Panda	I
176	Ramesh Ch. Bhunia	I
177	Bashudev Ch. Samanta	II
178	Prohallad Ch. Guria	II
	Chongra Kalagonda U. P.	
179	Panchanan Sanki (E)	I
180	Rakhal Ch. Jana (E)	I
181	Kumod Chandra Bera (E)	I
182	Prahallad Ch. Bhunia (E)	I
	Bhunia Maitychak U. P.	
183	Bhima Ch. Sasmal	II
184	Narendra Nath Paria	II
185	Shyam Ch. Paul	I
186	Manmatha Nath Maji	II
	Kismat Putputtia U. P.	
187	Ananta Gopal Bhunia (E)	I
188	Sripati Ch. Chowdhuri (E)	I
189	Amulya Ch. Paria (E)	II
190	Kanai Lal Kayet (E)	II
	Purba Charandaschak U. P.	
191	Gopal Ch. Kuity (E)	I
192	Prafulla Kumar Pattyanayak (E)	I
193	Bishnupada Adak (E)	II
194	Rash Behari Bera (E)	II
195	Pranabesh Ch. Bhoumik (E)	II
	Putputtia U. P.	
197	Satish Ch. Das (E)	II
198	Panchanan Prodhan (E)	I
	Srirampur Anath Bandhab U. P.	
200	Raj Krishna Das (E)	II
201	Sankar Chandra Bankura (E)	II
	Basantachak U. P. Maktab.	
203	Sk. Abdud Deyan (E)	I
204	Sk. Yakub Ali (E)	II
205	Jatindra N. Bag (E)	II
	Mathurichak U. P. Maktab.	
208	Nilkantha Bar (E)	II
209	Iswar Ch. Santra (E)	II
210	Kamdev Santra (E)	II
	Gakulnagar U. P. Maktab.	
211	Sk. Rustam Ali (E)	I
212	Ismail Shah (E)	I

Egra H. E. School Centre.

Roll No.	Name.	Division.
	Dulalpur U. P.	
1	Jnananjan Pati	I
2	Jiban Krisna Das	I
3	Gobinda Prosad Mahapatra	I
4	Iswar Mohan Hazra	I
5	Sitaram Chanda	I
	Murisai U. P.	
6	Arjun Bar	I
7	Abanti Kumar Maity	I
	Haipur U. P.	
9	Purna Chandra Jana	II
10	Srikanta Charan Das	I
11	Jiban Krisna Das	I
	Chandanpur U. P.	
12	Jatindra Nath Pahari (E)	I
13	Nalini Kumar Jana (E)	I
	Dubda U. P.	
14	Sudhir Chandra Paria	II
15	Radha Raman Jana	I
	Biswanathpur U. P.	
16	Bibhuti Bhusan Tripathi	II
17	Umesh Chandra Bar	II
18	Asutosh Misra	II
	Bidurpur U. P.	
19	Chitta Ranjan Jana (E)	I
20	Kanai Lal Khatua (E)	II
21	Protap Chandra Khatua (E)	I
22	Pulin Chandra Khatua (E)	II
24	Kamala Kanta Pahari (E)	II
	Atbati U. P.	
25	Basanta Kumar Das (E)	I
26	Hemanta Kumar Maity (E)	I
27	Bepin Behari Maity (E)	I
28	Prankrishna Das (E)	I
29	Jiban Krisna Sau (E)	I
	Analberia U. P.	
30	Paresh Chandra Pramanik (E)	I
31	Bankim Chandra Manna (E)	I
32	Nityananda Prodhan (E)	I
33	Hateswar Pahari (E)	I
34	Nagendra Nath Maity (E)	II
35	Rohini Kanta Hati (E)	I
	Gahabi U. P.	
37	Basanta Kumar Das	II
39	Nimai Charan Kundu	II
	Erenda U. P.	
40	Saroda Charan Panda	II
	Bathuari Board U. P.	
42	Srihari Charan Das	II
43	Jaykrishna Maity	II
	Tajpur U. P.	
44	Bhagwan Chandra Gachchhat	I
45	Nilkantha Gachchhat	I
	Badalpur U. P.	
46	Hemanta Kumar Patra (E)	I
47	Amarendra Nath Jana (E)	II
48	Siddheswar Bera (E)	II
49	Rajani Kanta Maity (E)	I
50	Ganga Narayan Maity (E)	I
52	Bankim Chandra Das (E)	II
53	Surendra Nath Panda (E)	II
54	Sudhir Kumar Raut (E)	I
55	Jiban Krisna Das (E)	I
	Khagda U. P.	
56	Baradakanta Mandal (E)	I
	Balageria U. P.	
59	Bisnupada Panda (E)	II
60	Radha Gobinda Das	II
	Naskarpur U. P.	
61	Jharu Charan Maity	I
62	Niranjan Panda	I
63	Srikanta Chatial	I

Roll No.	Name.	Division.
	Maheshpur U. P.	
67	Basanta Kumar Maity (E) ..	II
	Dubda U. P.	
68	Prosanna Kumar Maity (E) ..	II
69	Kartic Chandra Sau (E) ..	II
70	Kartic Chandra Sau (E) ..	I
71	Gour Mohan Das (E) ..	II
73	Sripati Kumar Sau (E) ..	II
74	Rakhal Chandra Sau (E) ..	II
75	Srina Chandra Gharai (E) ..	II
	Chorepalia U. P.	
76	Bibhuti Bhushan Satpathi (E) ..	I
77	Ram Chandra Jana (E) ..	I
78	Ban Behari Das Mahapatra (E) ..	II
79	Sohrab Khan (E) ..	I
80	Narendra Nath Sau (E) ..	I
81	Pyari Mohan Sau (E) ..	I
82	Rajani Kanta Paria (E) ..	I
83	Kartic Chandra Raj ..	I
	Kasba U. P.	
84	Anilkumar Das ..	II
85	Bhaku Charan Maity ..	II
	Dulalpur Board U. P.	
87	Murari Mohan Nayak (E) ..	II
	Khullaneshwari U. P.	
89	Rakhal Chandra Das ..	II
	Shyamhariber U. P.	
93	Murari Mohan Patra (E) ..	II
	Chirulia U. P.	
96	Bibhuti Bhushan Pahari (E) ..	II
97	Srinibas Acharyya ..	II
98	Madhu Sudan Bora ..	II
99	Ramani Kanta Maity ..	II
	Rukunpur U. P.	
102	Satish Chandra Das ..	I
103	Hrisikesh Mahapatra ..	II
104	Girish Chandra Das ..	I
	Contai H. E. School Centre.	
	Nachinda Board U. P.	
1	Gunadhar Jana (E) ..	I
2	Abanti Kumar Bera (E) ..	I
3	Amulya Kumar Bera (E) ..	I
4	Niranjan Bera (E) ..	I
5	Dinabandhu Sow (E) ..	I
6	Birendranath Brahma (E) ..	I
7	Purna Chandra Bhunia (E) ..	I
8	Dhirendranath Giri (E) ..	II
	Bania U. P.	
9	Ananta Kumar Maity ..	II
	Gopinathpur U. P.	
11	Ananta Kumar Bera (E) ..	II
	Seulibarh U. P.	
13	Haripada Das ..	II
	Durmuth U. P.	
14	Sarbeswar Mridha (E) ..	I
15	Dhirendranath Sow (E) ..	I
16	Mrigendranath Jana (E) ..	I
17	Sudhir Chandra Jana ..	II
18	Bibhuti Bhusan Panda (E) ..	I
19	Mangal Chandra Barik (E) ..	II
20	Annada Charan Hota (E) ..	I
21	Jadav Chandra Barai (E) ..	I

Roll No.	Name.	Division.
	Adaberia U. P.	
22	Bibhuti Bhusan Das (E) ..	I
23	Sudhanshu Shekhar Maity (E) ..	II
24	Sarbeswar Patra (E) ..	I
25	Jyotindranath Samanta (E) ..	I
26	Abanti Kumar Samanta (E) ..	I
	Bebartachak U. P.	
28	Abani Kumar Jana (E) ..	II
30	Jogeswar Das (E) ..	II
	Jamuasankarpur U. P.	
33	Srimati Satadalbashini Giri (E) ..	I
34	Hiru Ali Khan ..	II
	Sarada Hari Sova U. P.	
35	Anil Baran Das (E) ..	II
36	Rohini Kumar Maikap (E) ..	II
37	Rakhal Chandra Maikap ..	II
	Haripur U. P.	
41	Sreemati Bilasini Jana (E) ..	I
42	Abinash Ch. Nayak (E) ..	II
43	Barendranath Maity (E) ..	II
	Rasalpur U. P.	
44	Prem Chand Das ..	I
45	Arabinda Kumar Jana ..	II
46	Saktipada Maity ..	II
	Namaldiha U. P.	
48	Bibhuti Bhusan Manna (E) ..	I
49	Parameswar Mondal (E) ..	I
50	Satish Chandra Bag (E) ..	II
51	Ananda Kumar Das (E) ..	I
	Sarda U. P.	
52	Sudhanwa K. Pradhan ..	II
53	Manmotha Kumar Das (E) ..	II
	Amrai U. P.	
55	Kanailal Sen (E) ..	II
56	Brahmapada Chakrabarti (E) ..	II
57	Arun Chandra Sow (E) ..	I
58	Sudhir Chandra Mondal (E) ..	I
	Balia U. P.	
59	Aswini Kumar Barik ..	I
60	Achintya Kumar Bera ..	I
61	Haripada Maity ..	II
	Belda U. P.	
62	Chittaranjan Sow (E) ..	I
63	Banabehari Pal (E) ..	I
64	Khagendranath Pal (E) ..	II
65	Nirmalabala Panda (E) ..	II
	Bichunia U. P.	
66	Jitendra Nath Giri (E) ..	I
67	Barendra Nath Giri (E) ..	II
68	Sailen Chandra Mali (E) ..	II
	Baghamahakali U. P.	
69	Dinesh Chandra Tripathi (E) ..	I
70	Gunadhar Giri ..	I
71	Khagendranath Ghorai ..	I
72	Trailokyanath Samanta ..	I
	Harigechhia U. P.	
73	Binode Behari Das (E) ..	I
74	Gouranga Das (E) ..	I
75	Radhakrishna Bhunia ..	II

Roll No.	Name.	Division.
	Bhuniapada U. P.	
76	Nagendra Nath Jana	II
77	Baikuntha Nath Giri	I
78	Nur Box Daptary	II
79	Jiban Krishna Giri	II
	Durgapur U. P.	
80	Gunadhar Paria (E)	I
81	Anilkumar Bisui (E)	I
	Marisda U. P.	
83	Satish Chandra Ojha	I
85	Manmathanath Misra	II
	Ghoraghata U. P.	
86	Dharanidhar Paria	I
87	Dwijendranath Mandal	II
88	Sarbeswar Pradhan	II
89	Sarbeswar Jana	II
90	Atulananda Mandal	II
	Nemdasbarh U. P.	
92	Shyama Prasad Jana (E)	I
93	Amulya Kumar Barik (E)	II
94	Narayan Prasad Bera (E)	I
	Nayaput U. P.	
95	Rabindra Nath Maity	I
96	Bijoy Krishna Giri	I
97	Jagannath Bera	I
	Lachhanpur U. P.	
98	Adhir Chandra Pradhan	I
99	Janmajoy Karan	I
	Badalpur U. P.	
101	Narahari Jana	I
102	Achinta Kumar Rana	II
	Dwariapur U. P.	
103	Ram Krishna Mali (E)	I
104	Panchanan Maity (E)	II
105	Phanindranath Bera (E)	II
	Dahasonamui U. P.	
107	Abanti Kumar Patra	I
	Namal U. P.	
108	Gostha Behari Dasadhikari (E)	II
	Kajibasan U. P.	
111	Birendra Kumar Patra	II
	Kalikapur U. P.	
112	Jatindra Nath Pahari	II
	Barbaria U. P.	
114	Jiban Krishna Maity	II
115	Ananta Kumar Jana	II
	Gamartalia U. P.	
117	Atul Krishna Manna (E)	I
118	Profulya Kumar Bhunia (E)	II
	Kaltalia U. P.	
119	Surjya Narayan Giri	II
120	Gunadhar Maity	I
	Tagoria U. P.	
121	Jiban Krishna Das	II

Roll No.	Name.	Division.
	Gopalchak U. P.	
123	Pulin Behari Nayak	I
124	Nagendra Nath Pradhan	II
125	Lalmohan Pradhan	II
126	Ananta Kumar Maity	II
	Ajodhyapur U. P.	
127	Rebati Kumar Maity (E)	II
128	Haripada Giri (E)	II
129	Amulya Kumar Jana (E)	II
130	Ananta Kumar Guria (E)	II
	Gopalpur U. P.	
132	Ganganarayan Das (E)	I
133	Santosh Kumar Mondal (E)	II
	Sarishaberia U. P.	
134	Ram Narayan Rath (E)	II
135	Lakshminarayan Rath (E)	II
	Ghatua U. P.	
138	Pitambar Panda	II
	Tengunia U. P.	
140	Ananta Kumar Das (E)	I
141	Haripada Misra (E)	I
142	Jhareswar Maity (E)	I
	Pairachalia U. P.	
144	Bibhuti Bhusan Acharjya	II
	Bhaghaghole U. P.	
146	Gunadhar Jana (E)	II
147	Jyotindra Nath Maity	II
148	Puranjan Barik	II
149	Sailaja Kumar Maity (E)	II
	Dauki U. P.	
150	Sarbeswar Ojha	II
151	Sasadhar Jana	II
152	Jugal Krishna De	II
	Tajpur U. P.	
153	Kenaram Tripathi	II
154	Dhananjoy Giri	II
	Kulanjara U. P.	
158	Pritheswar Maity (E)	II
	Pairadwip U. P. (Maktab).	
166	Azimuddin Khan (E)	II
	Rankua U. P. (Maktab).	
167	Sk. Abdul Gafur (E)	I
	Nijmajna U. P. (Maktab).	
172	Sk. Shahabuddin	I
173	Sk. Abdul Maleq	II
	Bhagwanpur U. P.	
174	Narendra Nath Barui	II
	Payradwip U. P. (Maktab).	
175	Alauddin Mallick (E)	I

Roll No.	Name.	Division.
	Manikabasan M. E. School Centre.	
	Dahadaya U. P.	
1	Narayan Prasad Senapati (E)	I
2	Arjun Charan Sahoo (E)	I
3	Gouranga Chandra Maisal (E)	I
5	Brajendranath Suin	II
	Karanjee East U. P.	
6	Jamini Kanta Pradhan	I
7	Murari Mohan Bhakta (E)	I
8	Arun Krishna Mahapatra (E)	I
9	Bimala Kanta Pati	I
10	Ramanath Maity	I
	Dandabolbani U. P.	
11	Srimati Snehaprava Maity (E)	I
12	Amalkrishna Maity (E)	I
13	Atul Krishna Maity (E)	I
14	Aprati Kumar Giri (E)	II
15	Jajneswar Das (E)	I
16	Sudhir Kumar Jana (E)	II
	Tajpur U. P.	
18	Satyendranath Das Adhikari (E)	I
19	Banamali Das (E)	I
20	Prafulla Kumar Das (E)	II
21	Phanibhuson Kar (E)	I
	Hamirpur U. P.	
24	Sudhansu Sekhar Bera (E)	II
25	Basanta Kumar Das	I
26	Amulya Kumar Das (E)	II
27	Chittaranjan Das (E)	I
29	Jatindranath Pattanayak (E)	II
30	Govinda Prasad Maity (E)	II
31	Nilkantha Jana (E)	II
32	Surendranath Garu	II
33	Sasanka Sekhar Pattanayak (E)	II
34	Haripada Das (E)	I
	Depal U. P.	
35	Prafulla Kumar Giri (E)	I
36	Sarbeswar Giri (E)	I
37	Shaik Mejhar Ali (E)	I
	Chandanpur U. P.	
38	Nilkantha Patra (E)	I
39	Mrityunjoy Bera (E)	II
40	Srilochan Rana (E)	II
	Nayashyampur U. P.	
41	Mrityunjoy Poira (E)	I
	Dayanidhibarh U. P.	
43	Narendranath Pradhan (E)	II
44	Janmejay Maisal (E)	I
45	Jatindra Mohon Pradhan (E)	II
46	Niranjan Mondal	I
	Badalpur U. P.	
47	Pulinchandra Maity (E)	I
49	Norottam Panda	II
	Domuria U. P.	
50	Bhuson Chandra Saha (E)	II
52	Debiprasad Misra (E)	I
	Dakshin Jagadishpur U. P.	
55	Kalipada Jana (E)	II
56	Jnanendra Kumar De (E)	II

Roll No.	Name.	Division.
	Khayranda U. P.	
58	Bhagwan Chandra Bera	I
59	Jaykrishna Pradhan (E)	I
60	Bipin Behari Bera	I
61	Bankim Chandra Bera (E)	I
62	Bhawani Pada Misra (E)	I
63	Mrityunjay Patra	II
64	Jay Narayan Giri (E)	I
65	Lombodar Panda (E)	I
66	Kartick Ch. Giri (E)	II
67	Padmalochan Giri (E)	II
	Sonepur Board U. P.	
74	Sushil Kumar Maity	II
	Kalindi U. P.	
76	Sree Narayan Prasad Pradhan (E)	I
77	Harish Chandra Karan (E)	I
78	Niranjan Pradhan (E)	I
79	Sreepati Charan Jana (E)	II
80	Ananta Kumar Mangal (E)	I
81	Surendra Nath Samanta (E)	I
82	Ramani Kanta Sasmal (E)	II
83	Ramani Kanta Panchadyayee (E)	II
	Lachhindrapur U. P.	
85	Sree Hari Charan Maity	I
86	Bijay Krishna Jana	II
87	Abanti Kumar Gayen	I
	Tatkapur U. P.	
89	Narendra Nath Jana	II
91	Sreehari Charan Bhunia	II
92	Nalini Chandra Giri	II
94	Ramesh Chandra Dinda	I
	Maitna U. P.	
95	Sarat Chandra Nanda (E)	II
96	Dhananjay Khanda (E)	II
97	Kanai Lal Maity (E)	I
98	Jiban Krishna Pradhan (E)	II
	Chandpur U. P.	
100	Baikuntha Nath Pradhan (E)	I
101	Bhagawan Chandra Patra (E)	I
	Bodhra Tengramari U. P.	
102	Bhupendra Nath Bhanja (E)	I
103	Prasanna Kumar Bera (E)	II
104	Murari Mohan De (E)	I
	Mandar West U. P.	
105	Madhu Sudan Poira	I
106	Ananta Kumar Patra	I
	Karanji West U. P.	
107	Adhir Kumar Giri (E)	I
108	Gonesh Chandra Giri (E)	I
	Narkuli U. P.	
109	Bankim Chandra Jana (E)	II
110	Girish Chandra Pradhan (E)	II
111	Rajani Kanta Maity (E)	II
	Maitna U. P.	
112	Pitambar Maity (E)	I
	Teghari U. P.	
113	Subash Chandra Chaudhury (E)	I
114	Purandar Mondal (E)	I
115	Ganesh Chandra Patra (E)	I
	Beltalia U. P.	
117	Bijay Krishna Majhi (E)	II
	Kalindi U. P.	
118	Bijay Krishna Jana	II

A. RAHMAN,
Inspector of Schools (offg.).

Orders by the Vice-Chancellor and Syndicate of the Calcutta University.

Senate House, the 9th January 1935.

The undermentioned candidates are declared to have passed the Final M.B. Examination under the New Regulations held in November 1934 :—

(Arranged in alphabetical order.)

Carmichael Medical College, Belgachia.

Bagchi, Nikhilchandra.
Bandyopadhyay, Asokchandra.

Medical College, Calcutta.

Bandyopadhyay, Kalinath.

Carmichael Medical College, Belgachia.

Bandyopadhyay, Paritoshkumar.

Medical College, Calcutta.

Barua, Bidyadhar.
Basu, Ajitkumar.
,, Santoshkumar.

Carmichael Medical College, Belgachia.

Basu, Subodhkumar.

Medical College, Calcutta.

Basu, Sudhindranath.

Carmichael Medical College, Belgachia.

10 Basu, Sudhirchandra.

Medical College, Calcutta.

Basuray, Debedranath.
Bhattacharyya, Abanijiban.

Carmichael Medical College, Belgachia.

Bhattacharyya, Asutosh.
,, Charuchandra.
,, Lalmohan.

Medical College, Calcutta.

Bhattacharyya, Niranjan.
,, Satyacharan.
Biswas, Sudhindralal.
Chakrabarti, Umeschandra.
20 Chattopadhyay, Satijiban.
Chaudhuri, Bholanath.
,, Bijaykrishna.

Carmichael Medical College, Belgachia.

Das, Dulalchandra.
,, Jogeschandra.

Medical College, Calcutta.

Dasgupta, Annadaprasad.
Gangopadhyay, Ajitchandra.
Kundu, Surendralal.

Carmichael Medical College, Belgachia.

Maitra, Maniklal.
Mandal, Bibhutibhushan.

Medical College, Calcutta.

30 Md. Abdul Karim.
Md. Azizur Rahman.
Md. Mozaffor Rahman.
Mesbahuddin Ahmed.

Carmichael Medical College, Belgachia.

Mitra, Sisirkumar.

Medical College, Calcutta.

Mohammed Bashirullah.
Mujibur Rahman.

Carmichael Medical College, Belgachia.

Mukhopadhyay, Amarendranath.

Medical College, Calcutta.

Mukhopadhyay, Goposwar.
,, Haridas.

Carmichael Medical College, Belgachia.

40 Mukhopadhyay, Kanailal.

Medical College, Calcutta.

Mukhopadhyay, Khagendranath.

Carmichael Medical College, Belgachia.

Nandi, Becharam.
Pain, Abhaycharan.

Medical College, Calcutta.

Pal, Indubhushan, II.

Carmichael Medical College, Belgachia.

Ray, Ahibhushan.

Medical College, Calcutta.

Ray, Akshaykumar.

Carmichael Medical College, Belgachia.

Ray, Apurbakumar.
,, Barindranath.

Medical College, Calcutta.

Ray, Chandrakanta.
50 ,, Kalikinkar.
,, Lalita.

Carmichael Medical College, Belgachia.

Ray, Pulinbihari.

Medical College, Calcutta.

Ray, Rabindranath.
,, Sudhirkumar.
,, Sudhirchandra.

Carmichael Medical College, Belgachia.

Ray, Syamchand.

Medical College, Calcutta.

Saha, Dhirendramohan.

Carmichael Medical College, Belgachia.

Saha, Hemendrakumar.
Sarkadhikari, Kanakchandra.
60 Sarkar, Bankimchandra.

Medical College, Calcutta.

Sen, Prabhaskumar.
,, Subodhranjan.
Sengupta, Ajitkumar.
,, Amalendu.

Carmichael Medical College, Belgachia.

Sengupta, Jyotiranjan.

Medical College, Calcutta.

Sinharay, Jogabrata.

Carmichael Medical College, Belgachia.

Sur, Bijaygopal.

Medical College, Calcutta.

Syed Lutifur Rahman.
69 Tafazzal Hossain.

N. SEN,
Controller of Examinations.

NOTIFICATION.

Calcutta, the 3rd January 1935.

A Mohsin stipend of Rs. 5 a month, tenable for two years, with effect from 1st January 1935, is awarded to each of the students named below on the results of the Junior Madrasah Examination held in November 1934:—

Hooghly Madrasah.

1. Muhammad Mahboob Ali.

Dacca Madrasah.

1. Hafez Ahmad.

Chittagong Madrasah.

1. Abdul Aziz.

Rajshahi Madrasah.

1. Khondkar Azizar Rahman.

Burdwan Division.

1. Shaikh Kamaruddin Ahmad, Krishnapur Junior Madrasah, district Midnapore.
2. Abdul Hamid Sircar, Dabra Junior Madrasah, district Hooghly.

Presidency Division.

1. Muhammad Yasin, Bhabta Azizia High Madrasah, district Murshidabad.
2. Muhammad Kheyaluddin, Madhabkati Junior Madrasah, district Khulna.

Dacca Division.

1. Musammat Zaharunnessa, Sutiakati Girls' Junior Madrasah, district Bakarganj.
2. Muhammad Mafizul Haque, Bachamara Junior Madrasah, district Dacca.
3. Muhammad Ibrahim, Bilnalia Junior Madrasah, district Faridpur.
4. Hafiz Muhammad Ali, Charkumaria Junior Madrasah, district Faridpur.

Chittagong Division.

1. Abul Bashar Ahmadullah, Dashpara Junior Madrasah, district Noakhali.
2. Abu Adab Muhammad Zahirul Haq, Barail Junior Madrasah, district Tippera.
3. Muhammad Kalimullah, Ashrafpur Kalimia Junior Madrasah, district Tippera.
4. Ali Ahmad, Hingula Hossamia Junior Madrasah, district Tippera.

Rajshahi Division.

1. Muhammad Abdul Ghani (I), Rasulpur Junior Madrasah, district Rangpur.
2. Alema Khatun, Rajshahi Girls' Junior Madrasah.
3. Muhammad Masiruddin, Bogra Central High Madrasah.

The stipends are tenable in recognised High Madrasahs and recognised High English Schools.

Note.—Heads of institutions are requested to report to the Director of Public Instruction, by the 25th February 1935, the names of the stipend-holders admitted and the dates of admission. No stipend can be drawn until this information is supplied.

Subject to satisfactory progress and good conduct continuation stipends of Rs. 5 per month each from the provincial revenues, for a further period of two years with effect from 1st January 1937, will be granted to the students.

J. M. BOTTOMLEY,
Director of Public Instrn., Bengal.

NOTIFICATION.

Calcutta, the 3rd January 1935.

A scholarship of Rs. 5 a month, tenable for four years with effect from 1st January 1935, is awarded to each of the students named below on the results of the Junior Madrasah Examination held in November 1934:—

1. Amena Begum, Sutiakati Girls' Junior Madrasah, district Bakarganj.
2. Muhammad Basheer Hossain, Bahari Junior Madrasah, district Tippera.
3. Muhammad Asghar Ali, Ullapara Junior Madrasah, district Pabna.
4. Mobarak Hossain, Elliottganj Junior Madrasah, district Tippera.
5. Muhammad Fazlul Karim, Ghorasal A. K. Junior Madrasah, district Tippera.
6. Ayajuddin Ahmad, Rajshahi Madrasah.
7. Shaikh Abdur Rashid, Ulubaria Junior Madrasah, district Howrah.
8. Khorsheduddin Ahmad, Pakundia High Madrasah, district Mymensingh.

Shaikh Syedur Rahman, Bagerhat Junior Madrasah, district Khulna.

The scholarships are tenable in any recognised High Madrasah or recognised High English School.

Note.—Heads of institutions are requested to report to the Director of Public Instruction, Bengal, without delay, the names of the scholarship-holders admitted and the dates of admission. No scholarship can be drawn until this information is supplied.

J. M. BOTTOMLEY,
Director of Public Instrn., Bengal.

Education Department, Bengal.

NOTIFICATION.

Calcutta, the 29th December 1934.

The undermentioned students have passed the Junior Madrasah Examination held in October and November 1934 :—

FIRST DIVISION.

Bankura District.

Rasulpur Junior Madrasah.

1 Shaikh Ahmad Husain.

Burdwan District.

Ukhrid Junior Madrasah.

2 Shaikh Samsher Alam, No. 2.

Kulgaria Junior Madrasah.

3 Kazi Muhammad Zahed Ali.

Raniganj Darul-Oloom Junior Madrasah.

4 Abdul Karim.
5 Mashuque Ahmad.
6 Muhammad Alauddin.

Karajgram Junior Madrasah.

7 Choudhury Shamsul Alam.

Birbhum District.

Sekeddah Junior Madrasah.

8 Quazi Fazle Karim.

Margram Junior Madrasah.

9 Sk. Abbas Ali.

Barasija Junior Madrasah.

10 Shaikh Khoda Buksh.

Dumurgram Junior Madrasah.

11 Shaikh Md. Yusuf Ali.
12 Danesha Khatun.

Midnapore District.

S. M. I. Junior Madrasah.

13 Abdul Halim.

Krishnapur Junior Madrasah.

14 Shaikh Jaynal Abedin.
15 Shaikh Abdul Ohab.
16 Muhammad Idris Ali.
17 Shaikh Kamar Uddin Ahamad.

Chansorpur Junior Madrasah.

18 Shaikh Syed Ali.
19 Shaikh Mansoor Ali.

Gumgar Junior Madrasah.

20 Shaikh Lutfur Rahman.
21 Shaikh Abdul Malek.

Dhekua Junior Madrasah.

22 Md. Abdur Rahman.
23 Md. Abdul Wadud.

Hooghly District.

Hooghly Madrasah.

24 Sk. Muhammad Khalil.
25 Md. Yusuf.
26 Md. Nurul Haque.
27 Md. Mahboob Ali.
28 Muhammad Motiur Rahman Khan.

Kalachara Junior Madrasah.

29 Md. Badrudduzah Mullick.
30 Sk. Abdul Qyum.

Dabra Junior Madrasah.

31 Abdul Hamid Sircar.
32 Abdul Wadud.

Mustafapur Junior Madrasah.

33 Shaikh Md. Belal Husain.
34 Shaikh Md. Nasirul Hoque.

Bara Rambha Junior Madrasah.

35 Shaikh Abdul Wadud.
36 Muhammad Abbas Ali.

Keshabpur Junior Madrasah.

37 Shaikh Khodadad.

Furfura High Madrasah.

38 A. K. Md. Osman Ghani.

Ramchandrapur Junior Madrasah.

39 Md. Syed Ali Biswas.
40 Md. Ebadullah Mullick.
41 Sk. Anwar Hussain.
42 Sk. Md. Badrul Alamin.
43 Mir Syedur Rahman.
44 Sk. Abdul Azim.

Nawabpur Junior Madrasah.

45 Shaikh Ala Buksh.
46 Shaikh Muhammad Sultan.

Udna Kaderia Junior Madrasah.

47 Gazi Muhammad Abdul Khaleque.
48 Syed Abdul Moktadar.

Sheoraberia Panchberia Junior Madrasah.

49 Shaikh Muhammad Sadrul Ula.
50 Shaikh Motahar Ali.

Sitapur Junior Madrasah.

51 Mia Muhammad Abdul Hie.
52 Muhammad Jobed Ali.
53 Muhammad Iman Ali Khan.
54 Muhammad Salamat Ullah.
55 Muhammad Amir Ali.
56 Muhammad Magfarator Rahman.

Donk Junior Madrasah.

57 Muhammad Ismail.

Molla Simla Junior Madrasah.

58 Abdun Nasir.
59 Abul Barkat Mohiuddin Ahmad.

Bara-Tajpur Junior Madrasah.

60 Shaikh Abdul Ghani.
61 Rahat Hussain Tarafdar.

Sabalsingpur Junior Madrasah.

62 A. B. Muhammad Lutfar Rahman.
63 Md. Abdul Hakim Khan.
64 Sk. Muhammad Amir Ali.
65 Sk. Afzal Hossain.
66 Sk. Muhammad Ali.

Howrah District.

Chengail Junior Madrasah.

67 Md. Sajed Ali Mufty.
68 Md. Saogat Ali Mullick.

Panchla Junior Madrasah.

69 Shaikh Mahbubal Hoque.
70 Shaikh Muhammad Idris.
71 Shaikh Muhammad Mohsin.
72 Shaikh Rabial Hussain.
73 Mulla Abul Husain.

Basantapur Junior Madrasah.

74 Sk. Md. Ayyub Ali (I).
75 Sk. Abdur Rashid.

Howrah Hat Junior Madrasah.

76 Usman Ghani.

Bankul Junior Madrasah.

77 Abul Hussain Siddique.

Sankrail Azizia Junior Madrasah.

78 Ayub Ali.

Khajnabehala Junior Madrasah.

79 Shaikh Moula Buksh.

80 Shaikh Khadem Husain.

Hallyan Islamia Junior Madrasah.

81 Muhammad Nurul Alam.
82 Shaikh Abdul Odud.
83 Shaikh Yeakub Ali.

Uluberia Junior Madrasah.

84 Shaikh Abdur Rashid.

Banharishpur Junior Madrasah.

85 Muhammad Ayub Husain.
86 Muhammad Rafiqul Huq.
87 Muhammad Noor Ali.

Bankra Junior Madrasah.

88 Muhammad Husain.
89 Gholam Rasul Laskar.
90 Khalilur Rahman.

Calcutta.

Babu Mian Junior Madrasah.

91 Abdul Hamid.
92 Abdur Rashid.
93 Habibur Rahman.

Baniapuker Junior Madrasah.

94 Mansurul Haque.
95 Muhammad Nezamuddin.

24-Parganas District.

Akra Junior Madrasah.

96 Abul Khair Md. Abdul Quadir.
97 Lutfur Rahman.
98 Mir Mohiuddin Ahmad.
99 Muhammad Yaqub.
100 Shaikh Mohammad Yunus Ali.

Magrahat Junior Madrasah.

101 Muhammad Abdul Ghani.

Khosdelpur Junior Madrasah.

102 Muhammad Mofazzal Hussain.

Netra Furrokh Junior Madrasah.

103 Md. Abdul Basir Molla.
104 Md. Mofizul Haque.
105 Md. Sadeque Ali.

Ramchandrapur Junior Madrasah.

106 Md. Obaidulla Molla.

Naagpur Junior Madrasah.

107 Gholam Hussain.
108 Md. Shamsher Ali.

Basirhat Junior Madrasah.

109 Md. Atiur Rahman.
110 Md. Din Islam.
111 Md. Umed Ali.
112 Mujibar Rahman.

Nadia District.

Krishnagar Ezechiel Junior Madrasah.

113 Kalimuddin Ahmad.
114 Mohammad Farhad Ali.

Santipur Junior Madrasah.

115 Abdul Karim.
116 Islam Ali.

Chuadanga Junior Madrasah.

117 Mohammad Alfazuddin.

Kalabari Ramnagar Junior Madrasah.

118 Mohammad Abdul Karim.
119 Mohammad Abu Baker.
120 Mohammad Moslem Uddin.

Meherpur Junior Madrasah.

121 Khandakar Mohammad Ajan Ali.

Bahadurpur Junior Madrasah.

122 Mohammad Bazlar Rahaman.

Dansha Junior Madrasah.

123 Mohammad Ali Hasan.

Philipnagar Junior Madrasah.

124 Muhammad Maniruddin.
125 Muhammad Nezamuddin.
126 Muhammad Rahmatullah.

Murshidabad District.

Jangipur High Madrasah.

127 Abdul Khaleq Khan.
128 Abdul Khaleq Shaikh.
129 Afsar Ali Biswas.
130 Ali Ahmad.
131 Mir Zobaid Ali.

Jhumka Junior Madrasah.

132 Abdus Samad.
133 Muhammad Abul Bashar.
134 Muhammad Akkas Ali.
135 Muhammad Hasibuddin.
136 Muhammad Naimuddin.

Bhabta Azizia High Madrasah.

137 Muhammad Yasin.
138 Muhammad Elahi Baksh.
139 Muhammad Abdul Wadud.
140 Muhammad Abdul Wahhab.
141 Muhammad Abdus Salam (B).
142 Muhammad Abdur Rouf.
143 Muhammad Mohsin.

Shaikhdighi Junior Madrasah.

144 Abul Quasem.
145 Abul Hossain.
146 Abdul Hye.

Mohisar Junior Madrasah.

147 Muhammad Abu Absar.
148 Syed Abdul Aziz.

Madanpur Junior Madrasah.

149 Muhammad Ishaque Shaikh.
150 Zabed Ali Mondal.
151 Muhammad Luqman Mondal.
152 Muhammad Musa Kalim.

Muhammadpur Junior Madrasah.

153 Muhammad Abdur Rub.

Shibnagar Junior Madrasah.

154 Jamiruddin Ahmad.
155 Muhammad Khairulla.
156 Golam Panjatan.
157 Muhammad Abdul Qader.
158 Abdur Rahim.

Manikchak Junior Madrasah.

159 Muhammad Rahim Bakhsh.

Kanduria Kamalia Junior Madrasah.

160 Ziauddin Ahmad.

Berdhanpur Junior Madrasah.

161 Muhammad Abdul Aziz.
162 Ayezuddin Mian.
163 Muhammad Hamiduddin Mian.
164 Ishaque Hossain.
165 Majibur Rahman.
166 Muhammad Rafizuddin Mian.

Jessore District.

Garaganj Junior Madrasah.

167 Muhammad Nader Hussain.

Durgapur Junior Madrasah.

168 Munshi Daliluddin Ahmad.

Jhenidah Junior Madrasah.

169 Abul Kasem Wajiruddin.
170 Abul Fazal Nur Muhammad.
171 Muhammad Ataur Rahman.
172 Muhammad Azizuddin.
173 Muhammad Sirajuddin.

Nohatta Junior Madrasah.

174 Muhammad Abdur Rashid Jamadar.

Lahuria Junior Madrasah.

175 Muhammad Abdul Latif Khan.
176 Muhammad Abdul Jalil.
177 Muhammad Abdur Rashid.
178 Muhammad Shafiuddin Faqir.

Parbatipur Junior Madrasah.

179 Muhammad Abdul Aziz.
180 Naziruddin Ahmad.

Basundia Junior Madrasah.

181 Khan Khorsed Ali.

Kashipur Junior Madrasah.

182 Abul Kalam Muhammad Nesar Hussain.

183 Sheikh Abu Nasr Muhammad Amir Ali.

Khairtala Junior Madrasah.

184 Abul Khair Muhammad Amjad Ali.
185 Jahantabuddin Khan.
186 Muhammad Attar Ali.
187 Muhammad Mofazzal Hussain.

Durmutia Junior Madrasah.

188 Muhammad Abdul Jabbar.

Jhikergacha Junior Madrasah.

189 Muhammad Mohsin.
190 Muhammad Lutfar Rahman.
191 Muhammad Maqbul Hussain.
192 Muhammad Fazlul Karim.
193 Abu Asad Muhammad Mudasser Hossain.

Maulanabad Junior Madrasah.

194 Muhammad Abdul Ghafur.
195 Muhammad Abdul Malek.

Baintchitala Junior Madrasah.

196 Khundker Muhammad Rashidunnabi.
197 Muhammad Ishaque.
198 Muhammad Ismail.
199 Muhammad Khairulla.
200 Khundker Muhammad Tyeb Husain.
201 Muhammad Altaf Hussain.

Magura High Madrasah.

202 Muhammad Shahadat Husain.
203 Zillur Rahman Siddiq.
204 Muhammad Altaf Hussain.

Khulna District.

Kalaroa Junior Madrasah.

205 Muhammad Ayenuddin.
206 Muhammad Hossain Ali.
207 Muhammad Shahabuddin Shaikh.
208 Muhammad Umed Ali.

Labsa Junior Madrasah.

209 Muhammad Abdul Latif.
210 Muhammad Azimuddin Sardar.
211 Muhammad Ataur Rahman.
212 Shaikh Enamul Haque.
213 Shaikh Matlub Ahmad (No. I).
214 Shaikh Matlub Ahmad (No. II).
215 Shaikh Mohsen Ali.
216 Shaikh Nurul Islam.

Bagerhat Junior Madrasah.

217 Shaikh Noor Muhammad.
218 Shaikh Raihanuddin.
219 Shaikh Syedur Rahman.
220 Syed Ahmad Ali.

Baintala Junior Madrasah.

221 Muhammad Abdur Rahim.
222 Muhammad Sher Ali Sardar.
223 Sardar Akamuddin Ahmad.

Baintala Kashipur Junior Madrasah.

224 Mallik Najmul Huq.
225 Mullah Abdul Jabbar.
226 Sardar Muhammad Abdus Sabur.

Barakatali Junior Madrasah.

227 Ghazi Abdus Samad.
228 Shaikh Hossain Ali.
229 Shaikh Laiquddin.

Baruikhali Junior Madrasah.

230 Muhammad Abdul Ghani Mullah.
231 Muhammad Abul Qasim.
232 Muhammad Habibur Rahman.
233 Muhammad Janab Ali.
234 Muhammad Karamat Ali.

Bhuarkandar Junior Madrasah.

235 Nazir Ahmad Howladar.

Borni Sairabad Junior Madrasah.

236 Bayati Ishaq Ahmad.
237 Ghazi Qasimuddin.
238 Mullah Rustam Ali.

Daulatpur Junior Madrasah.

239 Shaikh Azizur Rahman.
240 Shaikh Muallim Uddin.

Dhoradoa Junior Madrasah.

241 Khan Abdur Rahman.
242 Khan Nazir Ahmad.
243 Muhammad Aftabuddin.
244 Shaikh Aminuddin.

Hakimpur Junior Madrasah.

245 Hasanuddin Ahmad.
246 Muhammad Ziauddin.
247 Shaikh Muhammad Loqman Hakim.
248 Shaikh Muhammad Waqqas.

Hazrakhali Junior Madrasah.

249 Bali Habibar Rahman.
250 Khan Khanjahan Ali.
257 Shaikh Maheruddin.

Jamira Siddiqia Junior Madrasah.

252 Ekhlasuddin Ahmad.
253 Maqsaduddin Ahmad.
254 Muhammad Abdul Huq.
255 Muhammad Abdul Majid.
256 Muhammad Abdul Wahhab.
257 Muhammad Azhar Ali.
258 Zahiruddin Ahmad.

K. B. Fatehpur Junior Madrasah.

259 Faqir Ishaq Ali.
260 Haldar Karimuddin.
261 Haldar Masiruddin.
262 Haldar Yasin Ali.
263 Shaikh Abdus Sattar.
264 Shaikh Katebur Rahman.
265 Shaikh Modassar Hossain.

Kachubunia Junior Madrasah.

266 Abul Khair Muhammad Abdus Subhan.
267 Howladar Muhammad Velayet Hossain.
268 Qazi Kherajudin Ahmad.
269 Shaikh Muhammad Abdur Rashid.

Kazdia High Madrasah.

270 Muhammad Abdul Hamid Khan.
271 Muhammad Ismail Shaikh.
272 Muhammad Mujibar Rahman.

Khanjahania Junior Madrasah.

273 Khondkar Amjad Ali.
274 Naqib Hossain Ali.

Khordo Junior Madrasah.

275 Muhammad Mosahebuddin.
276 Muhammad Shamsul Huq.
277 Muhammad Zamiruddin.

Khulna Yusufia High Madrasah.

278 Abul Kalam Sultan Ahmad.
279 Muhammad Abdul Huq.
280 Muhammad Nurur Rahman.

Madhabkati Junior Madrasah.

281 Bepari Imanuddin.
282 Muhammad Abdur Rahman.
283 Muhammad Kheyaluddin.
284 Muhammad Menhajuddin.
285 Shaikh Safatullah.

Parkumarkhali Junior Madrasah.

286 Faqir Hatem Ali.
287 Khan Asmat Ali.
288 Majhi Mansur Ali.

Rajpat Junior Madrasah.

289 Muhammad Tayebur Rahman.

Sajiara MacPherson Junior Madrasah.

290 Khan Shamsur Rahman.
291 Shaikh Abdul Matin.
292 Shaikh Muhammad Ismail.
293 Syed Shamsur Rahman.

Terakhada Junior Madrasah.

294 Mullah Shafiuddin.
295 Sakati Abul Khair.

Dacca District.

Dacca Madrasah.

296 Abdul Aziz Chaudhury.
297 Abdus Samad.
298 Abul Khair Muhammad Idris.
299 Ayyub Ali.
300 Hafez Ahmad.
301 Muhammad Husain.
302 Muhammad Shamsul Islam.
303 Muhammad Sulaiman.

Zinzira Junior Madrasah.

304 Alauddin, I.
305 Abdul Hannan.
306 Abdul Gaffar.
307 Alauddin, II.
308 Abdul Latif.

Bhowal Monoharia Junior Madrasah.

309 Abul Kasem Muhammad Fazlul Haque.
310 Muhammad Abdul Halim.

Ramerkanda Junior Madrasah.

311 Muhammad Abdul Gafur.
312 Muhammad Muhiuddin.
313 Muhammad Muzaffar Hossain.

Mirpur Mofidia Junior Madrasah.

314 Muhammad Abul Kalam Azad.
315 Muhammad Shamsuddin.
316 Faizuddin Ahmad.

Paikpara Junior Madrasah.

317 Khandaker Jasimuddin.
318 Sayyid Abdus Subhan.
319 Md. Sahibuddin.
320 Muhammad Azhar Ali Khan.

Ekdala Junior Madrasah.

321 Abdul Khaleque Khan.

Khaikara Junior Madrasah.

322 Moslehuddin Ahmad.
323 Qumaruddin Ahmad.
324 Md. Abdus Salam.
325 Md. Hafizar Rahman.

Pipulia Junior Madrasah.

326 Abu Syed Muhammad Abdul Jalil.

Bachamara Junior Madrasah.

327 Md. Mafizul Haque.

Mahisaloha Junior Madrasah.

328 Nasiruddin Ahmad.
329 Md. Muslimuddin Ahmad.
330 Md. Darbesh Ali.
331 Md. Ismail.
332 Reazuddin Ahmad.

Hammadia High Madrasah.

333 Hafiz Lutfar Rahman.

Ramnagar Junior Madrasah.

334 Matiar Rahman.
335 Muhammad Hafizullah.
336 Md. Soona Miah.
337 Abdul Khaleque.

Baliapara Junior Madrasah.

338 Jamaluddin.
339 Muhammad Moniruddin Miah.
340 Abu Towab Mollah.

Masimpur Junior Madrasah.

341 Muhammad Yakub Ali Miah.

Brahmandi Junior Madrasah.

342 Muhammad Sadat Ali.
343 Abul Bashir Muhammad Sani.

Karimganj Junior Madrasah.

344 Muhammad Fazlur Rub.

Binnabaid Junior Madrasah.

345 Taheruddin Bhuian.

Bajbi Mufidia Junior Madrasah.

346 Abdur Rahman.
347 Dil Muhammad.

Poradia Junior Madrasah.

348 Hasimuddin.
349 Aftabuddin.
350 Abdul Huq.

Rampal Junior Madrasah.

351 Hafiz Muhammad Serajul Huq.
352 Muhammad Sadeq Ali Khan.

Malibagh Junior Madrasah.

353 Muhammad Azmatullah.
354 Muhammad Giasuddin Bhuian.

Mymensingh District.

Osmanpur Junior Madrasah.

355 Muhammad Abdul Haque.

Kalikaprosad Junior Madrasah.

356 Abdul Malek.
357 Ful Muhammad.

Nasirabad High Madrasah.

358 Muhammad Abul Qasem Akond.
359 Muhammad Lohazuddin.
360 Muhammad Ishaq.

Pakundia High Madrasah.

361 Khursheduddin Ahmad.
362 Muhammad Abdul Hye.
363 Muhammad Abdul Wahhab.
364 Muhammad Abdur Razzaque.

Hazrabari High Madrasah.

365 Ahmad Ali.
366 Muhammad Sabet Ali Khan.
367 Muhammad Sharifuddin.

Muzaffarpur Junior Madrasah.

368 Muhammad Naimuddin Khandakar.

Dhanikhola Junior Madrasah.

369 Muhammad Abbas Ali.
370 Jasimuddin Ahmad.
371 Shamsuddin Ahmad.

Shibrampur Junior Madrasah.

372 Muhammad Abdul Wahed.
373 Muhammad Ali.

Kishoreganj Junior Madrasah.

374 Muhammad Hatem Ali.
375 Ausafuddin Muhammad Eshak.

Maheshpur Junior Madrasah.

376 Muhammad Musharraf Hussain.
377 Muhammad Marfat Ali.
378 Muhammad Rustam Ali.
379 Muhammad Ishaq.
380 Muhammad Oliullah.

Bhalukjan Junior Madrasah.

381 Muhammad Shamsul Haque.
382 Muhammad Abdul Jabbar.

Barabaria Junior Madrasah.

383 Abul Faker Md. Abdul Bari.
384 Muhammad Abdus Siddique Khan.

Banbangla Junior Madrasah.

385 Muhammad Mumtazuddin Khan.

Mukshapur Junior Madrasah.

386 Muhammad Abid Ali.
387 Muhammad Qurban Ali.
388 Muhammad Abdul Hai.
389 Muhammad Naimuddin.

Bashati Junior Madrasah.

390 Muhammad Aftabuddin.
391 Muhammad Abdul Aziz Bhuya.

Maijbhag Panchpara Junior Madrasah.

392 Muhammad Shirazul Islam Bhuyan.

Balijuri Junior Madrasah.

393 Muhammad Iman Ali.
394 Muhammad Shafiul Alam.
395 Muhammad Nural Islam.
396 Muhammad Kudrat Ali.
397 Mirza Muhammad Shamsul Huda.
398 Muhammad Abul Quasem.

Govindapur Junior Madrasah.

399 Muhammad Abdul Jabbar.
400 Muhammad Aminuddin.
401 Muhammad Helaluddin Taluqder.

Raghunathpur Junior Madrasah.

402 Muhammad Jasimuddin.
403 Muhammad Kasimuddin Shaikh.

Jagatpura Junior Madrasah.

404 Abdur Rashid Mian.
405 Khandaker Rakibal Hossain.
406 Rostam Ali Mian.
407 Abdur Rahman Miah.

Jamalpur Hedayetia Junior Madrasah.

408 Muhammad Abdus Sobhan.

Srirampur Junior Madrasah.

409 Muhammad Eshaque Ali.
410 Muhammad Abdur Rafique.

Kochandhara Junior Madrasah.

411 Muhammad Akbar Hossain

Jhalopara Junior Madrasah.

412 Muhammad Ahmad Ali.
413 Muhammad Muazzam Hussain.
414 Muhammad Burhanuddin.
415 Muazzem Hossain Talukder.
416 Abul Hossain.

Sherpur Junior Madrasah.

417 Muhammad Maqsood Ali, II.
418 Muhammad Abul Hossain.

Banagram Junior Madrasah.

419 Khandaker Md. Rajab Ali.
420 Muhammad Farazuddin.
421 Muhammad Abdul Haque.
422 Muhammad Abdul Quader.

Joginimora Junior Madrasah.

423 Muhammad Abdul Wahed Taluqder.

Santia Junior Madrasah.

424 Muhammad Kudrat Ali Mian.
425 Muhammad Abdul Wahed Mian.
426 Muhammad Intaz Ali Mian.
427 Muhammad Ayub Ali.
428 Muhammad Mofizuddin.

Mahishbathan Junior Madrasah.

429 Shah Muhammad Easin Ali.
430 Muhammad Ishkar Ali.
431 Nizamuddin Ahmad.

Patadaha Junior Madrasah.

432 Abul Kalam Muhammad Aftabuddin.
433 Muhammad Abdul Hai.
434 Muhammad Shamsuzzuha Chaudhury.
435 Muhammad Abdur Rahim.
436 Muhammad Yakub Ali.

Madanpur Junior Madrasah.

437 Muhammad Abdul Latif Faquir.

Khalishapur Junior Madrasah.

438 Abul Khair Muhammad Sharifuddin Khan.
439 Muhammad Faizuddin.
440 Hassainuddin Ahmad.

Bali Junior Madrasah.

441 Abdul Mannan Khan.
442 Mahammad Yusuf Ali.

Husainpur Junior Madrasah.

443 Muhammad Rahmat Ali.
444 Muhammad Sekandar Ali Akhanda.
445 Muhammad Raisuddin.

Kandulia Karimpur Junior Madrasah.

446 Muhammad Mokhlasar Rahman.

Brahmanshashan Junior Madrasah.

447 Muhammad Arfan Ali.
448 Muhammad Nasimuddin.

Nasirabad High Madrasah.

449 Mirza Abdul Malik.

Karatia Roquea High Madrasah.

450 Muhammad Quarban Ali.
451 Muhammad Emdadul Huq.
452 Muhammad Abdullahel Baqi.
453 Khandaker Habibur Rahman.
454 Hashmat Ali.

Tangail Junior Madrasah.

455 Golabdin

Sudampara Junior Madrasah.

456 Muhammad Noorul Hoque Mian.
457 Muhammad Saheb Ali Mian.
458 Muhammad Akbar Siddique.
459 Abdul Hafiz Khan.
460 Muhammad Abdul Wahhab Mian.
461 Muhammad Easin Ali Khan.

Kawaljani Junior Madrasah.

462 Abdur Rahman Miah.

Barga Junior Madrasah.

463 Muhammad Abul Fata Mian.

Battajore Junior Madrasah.

464 Muhammad Nawsher Ali.
465 Muhammad Akin Ali.

Pingna Junior Madrasah.

466 Abdur Rahman Mian.
467 Muhammad Ejjat Ali Mian.
468 Muhammad Nizamuddin.

Daftiar Junior Madrasah.

469 Asadulahil Ghaleb Siddiqi.

Dharerbari Junior Madrasah.

470 Md. Menhajuddin.
471 Md. Anisar Rahman Miah.
472 Md. Asmat Ali Miah.
473 Md. Abdus Sabur Miah.
474 Md. Ali Akbar.

Kuraliapara Junior Madrasah.

475 Motiar Rahman Miah.
476 Male Muhammad Khan.
477 Khorshed Ali Miah.

Balla Junior Madrasah.

478 Muhammad Abdus Samad Miah.
479 Muhammad Giashuddin Miah.
480 Muhammad Matior Rahman Miah.

Faridpur District.

Faridpur High Madrasah.

481 Muhammad Abdur Rashid.
482 Muhammad Muzibar Rahman.
483 Gholam Quader Khan.

Charbhadrasan Junior Madrasah.

484 Entazuddin Molla.
485 Abdul Wahed Molla.
486 Abdul Awal Mian.
487 Daliluddin Molla.

Bilnalya Junior Madrasah.

488 Muhammad Ibrahim.
489 Muhammad Ainuddin.
490 Jaynal Abedin Khan.

ashratshahi Junior Madrasah.

491 Mir Md. Shamsul Huda.

Jasai Oaten Junior Madrasah.

492 Md. Abdus Sobhan,

Ratail Junior Madrasah.

493 Md. Abdus Shukur.
494 Md. Azimuddin.
495 Md. Mukhtar Hossain.

Jaynagar Junior Madrasah.

496 Rawayet Ali Khan.

Narikelbari Junior Madrasah.

497 Sultan Ahmad.
498 Md. Abdul Wahab.
499 Md. Abdur Rashid.
500 Md. Abdul Khaleque.

Kalkini Junior Madrasah.

501 Maminuddin Mian.

Madaripur Junior Madrasah.

502 Muhammad Wares Ali Khan.
503 Abdul Khaleque Talukder.
504 Alfazuddin Talukder.
505 Muhammad Naderuzzaman.
506 Syed Abdul Hafez.

Takerhat Junior Madrasah.

507 Md. Abdul Quader Molla.
508 Muhammad Abdul Awal Mian.
509 Erfanuddin Ahmad.
510 Muhammad Abdul Khaleque Mian.
511 Muhammad Abdul Jabbar.

Charatra Azizia Junior Madrasah.

512 Muhammad Abdul Gani.
513 Muhammad Abdul Hai Miah.
514 Muhammad Abdul Jabbar Miah.
515 Muhammad Syed Ahmad.

Enayetnagore Junior Madrasah.

516 Md. Kalam Ali Miah.
517 Md. Anwar Hossain Miah.

Saldha Junior Madrasah.

518 Abul Bashar Muhammad Kiramat Ali.
519 Fazlur Rahman.
520 Din Muhammad.
521 Muhammad Aminul Islam Miah.

Charkumaria Junior Madrasah.

522 Hafez Muhammad Ali.
523 Muhammad Moslem Miah.
524 Begam Nuranneesa.

Sahibrampur Junior Madrasah.

525 Muhammad Yasin Sarder.
526 Abdul Ali Sarder.
527 Muhammad Afsaruddin Ahmad.
528 Md. Afsaruddin Choukider.
529 Muhammad Abdul Wazed Bepari.
530 Muhammad Abdul Haque.
531 Mofassal Haque.

Nilfa Boira Junior Madrasah.

532 Muhammad Aliozzaman Mian.
533 Muhammad Moslem.
534 Mostanser Billah.
535 Erfanuddin.
536 Abdul Wahed Molla.
537 Muhammad Serajul Haque.

Pakurtia Junior Madrasah.

538 Muhammad Fazlur Rahman.

Kathi Junior Madrasah.

539 Muhammad Abdul Haque Khan.
540 Fayekuzzaman.

Char Bhaga Junior Madrasah.

541 Muhammad Shamsul Haque.
542 Muhammad Abdul Aziz.
543 Muhammad Nurul Islam.
544 Muhammad Habibullah.
545 Muhammad Abdul Wahab.

Bakarganj District.

Gazirpar Junior Madrasah.

546 Abdus Sobhan.
547 Muhammad Ershad Ali.
548 Muhammad Abdul Malek.

Kolardoania Junior Madrasah.

549 Muhammad Abdul Hamid Khan.
550 Muhammad Ismail, I.
551 Muhammad Ismail, II.
552 Muhammad Lutfar Rahman.
553 Muhammad Osman Ghani.
554 Muhammad Raihanuddin.

Khayerhat Huq Junior Madrasah.

555 Muhammad Ismail.

Charpata High Madrasah.

556 Abul Bashar Muhammad Osman Gani.
557 Muhammad Yakub Ali.
558 Muhammad Eunus, II.

Gournadi Junior Madrasah.

559 Abul Hashem.
560 Abdul Karim.

Akalam Ahmadia Junior Madrasah.

561 Muhammad Abdul Awal Miah.

Chhota Gourichanna Junior Madrasah.

562 Abdul Ghani.
563 Matiar Rahman.

Barajalia Sobhania Junior Madrasah.

564 Mosharraf Husain.

Nazirpur Junior Madrasah.

565 Abdul Khaleque Miah.

Keundia High Madrasah.

566 Muhammad Aftabuddin.
567 Muhammad Akram Ali.
568 Muhammad Amjad Hossain.
569 Muhammad Hashmat Ullah.
570 Muhammad Israyeel.
571 Musammat Rahima Khatun.

Charpadma Junior Madrasah.

572 Muhammad Abdur Rashid.

Gulishakhali Junior Madrasah.

573 Mahiuddin Ahmad.

Nazirpur Chhotadalima Junior Madrasah.

574 Abdul Gafur.
575 Abdul Haque.
576 Abdul Jabbar.
577 Janab Ali.
578 Rustum Ali.

Mamania Junior Madrasah.

579 Muhammad Yeasin.

Ulania Junior Madrasah.

580 Muhammad Abual Kasem.

Kazirchar Junior Madrasah.

581 Ali Ahmad.

Sutiakati Junior Madrasah.

582 Muhammad Abdur Rahman.
583 Muhammad Altafuddin.
584 Muhammad Habibur Rahman, I.
585 Muhammad Matiur Rahman.
586 Muhammad Serajul Islam.
587 Shahabuddin Ahmad.

Sutiakati Girls' Junior Madrasah.

588 Amena Begum.
589 Musammat Amena Khatun.
590 Musammat Fakarunnessa.
591 Musammat Roushan Ara Begam.
592 Musammat Zaharunnessa.

Rayapur Latifia Junior Madrasah.

593 Syed Nesab Ali.

Durgapur Bajukati Junior Madrasah.

594 Howlader Goashuddin.

Perojpur K. U. Junior Madrasah.

595 Muhammad Abdur Rashid.
596 A. F. Md. Abdul Hamid.

Dhowa Rajpasha Junior Madrasah.

597 Sarder Amzed Ali.

Mirjakalu Junior Madrasah.

598 Khurshid Alam.

A. Rub High Madrasah.

599 Muhammad Abdul Majid.
600 Musammat Amatullah Khatun.

Chandpur Junior Madrasah.

601 Abdul Ghani Khandaker.

Chittagong District.

Chittagong Madrasah.

602 Abdul Aziz.
603 Abdus Sattar.
604 Abul Mohsin.
605 Saiyad Ahmad Husain.
606 Janab Ali.
607 Masudul Haq.
608 Minhajul Huda.
609 Nurul Haq.

Bailchari Junior Madrasah.

610 Abdur Rashid.
611 Alauddin.
612 Kabir Ahmad.
613 Munir Ahmad.
614 Mustafizur Rahman, I.

Kadhurkhil Junior Madrasah.

615 Muhammad Abdur Rashid.

Mariamnagar Junior Madrasah.

616 Abu Taleb.
617 Shamsul Alam.

Madanbibirhat Junior Madrasah.

618 Abu Saleh Muhammad Shamsuddin.

Panchlaish Junior Madrasah.

619 Abul Bashar.
620 Muzaffar Ahmad.

Sikalbaha Junior Madrasah.

621 Abu Jafar Rafiq Ahmad Chaudhury.
622 Abu Taher Sharif Ahmad Chaudhury.
623 Khaza Ahmad.

Rupkania Junior Madrasah.

624 Muhammad Ashraf Chaudhury.

Sitakund High Madrasah.

625 Amiruzzaman.
626 Nurul Amin.

Charkanai Junior Madrasah.

627 Inamul Haq.
628 Tajul Mulk.
629 Zakir Ahmad.

Sanua Junior Madrasah.

630 Bazlur Rahman.
631 Ghulam Sobhan.
632 Maqsud Ahmad.

Yatimkhana Junior Madrasah.

633 Muhammad Safiullah.
634 Muhammad Yunus.
635 Rashid Ahmad.

Noapara Junior Madrasah.

636 Muhammad Mushraf Ali.

Kaiyarbil Mumin Junior Madrasah.

637 Muhammad Abdus Sattar.

Tippera District.

Hussamia High Madrasah

638 Hafiz Abdus Salam.
639 Muhammad Abdul Majid.
640 Muhammad Ali Husain.
641 Muhammad Bashirullah.
642 Muhammad Muklisur Rahman.
643 Qazi Abdul Halim.

Mainamati Junior Madrasah.

644 Abdul Karim.
645 Abul Fazal Muhammad Muzaffar Ahmad.
646 Ambar Ali.

Maligaon Ashrafia Junior Madrasah.

647 Abil Bashar Muhammad Abdur Rab.
648 Abil Faiz Muhammad Shamsamul Wadud.
649 Ali Ahmad.
650 Muhammad Ali Akbar.
651 Muhammad Ali Husain.
652 Muhammad Fazlur Rahman.
653 Muhammad Khorshed.
654 Muhammad Mahibbur Rahman.
655 Muhammad Tafazzal Husain.

Khoshbash Junior Madrasah.

656 Qazi Abul Qasem.
657 Shafiqul Islam Chaudhury.

Fultali Junior Madrasah.

658 Salimullah.

Mahichail Junior Madrasah.

659 Abdul Jabbar.
660 Hamid Baksh Majumdar.

Palishara Junior Madrasah.

661 Abdul Jalil.
662 Ali Azam Majumdar.
663 Imamuddin Ahmad.
664 Khairul Bashr Muhammad Shamsul Haq.
665 Khan Muhammad Abdus Subhan.
666 Nazrul Qader Muhammad Anwarullah.

Muhammadpur Junior Madrasah.

667 Muhammad Abdul Majid.
668 Muhammad Abdus Subhan.

Barail Junior Madrasah.

669 Abu Adab Muhammad Zahirul Haq.
670 Abul Bashr Muhammad Abdur Rab Bhuiyan.
671 Abul Qasem Muhammad Shafiqul Islam.
672 Abdul Haq Miyan.
673 Jalal Khan.
674 Jamal Khan.
675 Mahiuddin Khan.

Uttarda Junior Madrasah.

676 Muhammad Abdul Mannan.
677 Muhammad Anwarullah.

Hajiganj Junior Madrasah.

678 Muhammad Abdul Ghafur Patwari.
679 Abdul Qader Miyan.
680 Fazlul Haq Miyan.
681 Habibullah Sardar.
682 Muhammad Badiur Rahman.

Gunabati Junior Madrasah.

683 Muhammadullah.
684 Muklesur Rahman.

Nimsar Junior Madrasah.

685 Abdul Ghafur.

Khalla Junior Madrasah.

686 Abdul Qader.
687 Abdur Rauf.
688 Maqtul Husain.

Jaipur Osmania Junior Madrasah.

689 Abul Hashem.
690 Muhammad Khorshed Miyan.

Gopalnagar Junior Madrasah.

691 Muhammad Abdul Mannan.
692 Muhammad Abdur Razzaq.
693 Muhammad Ayet Ali Mullah.
694 Muhammad Moshin Ali.

Ghorasal Junior Madrasah.

695 Abu Muhammad Mafizul Islam.
696 Abdul Baset Khondkar.
697 Abdul Jabbar.
698 Abdus Subhan.
699 Muhammad Ayat Ali.
700 Muhammad Atiqullah.
701 Muhammad Fazlul Karim.

Hingula Hossamia Junior Madrasah.

702 Abdul Khaleq, I.
703 Abdul Khaleq, II.
704 Abdur Razzaq.
705 Ali Ahmad.
706 Muhammad Idris.

Baddabazar Junior Madrasah.

707 Abu Hamza Muhammad Ali Akbar.
708 Abu Muhammad Khorshed.
709 Abu Muhammad Serajul Haq.
710 Abu Muhammad Shamsul Haq.
711 Abul Qasem Muhammad Nurul Haq.
712 Abu Taher Muhammad Abdul Matin.
713 Muhammad Abdul Latif.
714 Muhammad Muminuddin.

Jamalherpur Junior Madrasah.

715 Abdul Jalil.
716 Abdul Muttaleb.
717 Abdul Qayyum.
718 Abul Qasem.
719 Majidur Rahman.
720 Abdus Samad.
721 Waizuddin Ahmad.

Shaktali Junior Madrasah.

722 Abdul Latif Majumdar.
723 Ali Akbar, I.
724 Ali Akbar, II.
725 Ali Ashraf Khan.
726 Noorul Islam.
727 Rahimullah.
728 Shamsul Haq, I.
729 Shamsul Haq, II.

Kharera Mahmudia Junior Madrasah.

730 Muhammad Idris Ali.
731 Muhammad Shamsul Haq.

Elliotganj Junior Madrasah.

732 Abdul Hamid.
733 Abdul Wahed.
734 Abdur Rab Miyanji.
735 Abdus Salam.
736 Abdus Sattar.
737 Ali Hosain.
738 Aqel Ali.
739 Bashirul Islam.
740 Fazlul Haq.
741 Mobarak Hussain.
742 Sultan Ahmad.
743 Syed Ali.

Dashpara Junior Madrasah.

744 Kabiruddin Ahmad.

Ashrafpur Junior Madrasah.

745 Muhammad Abdul Aziz.
746 Muhammad Ali Ahmad.
747 Muhammad Abdul Latif, I.
748 Muhammad Abdul Latif, II.
749 Muhammad Abdul Khaliq.
750 Muhammad Aslam.
751 Muhammad Erad Ali.
752 Muhammad Fazlul Huda.
753 Muhammad Ismail.
754 Muhammad Kalimullah.
755 Muhammad Mukhtaruddin.
756 Muhammad Serajuddin.
757 Muhammad Siddiqur Rahman.
758 Sultan Ahmad.
759 Muhammad Wahiduddin Ahmad.

Cheriara Junior Madrasah.

760 Abdul Latif.
761 Abdur Rab.
762 Noor Muhammad Patwari.

Kahalthuri Hamidia Junior Madrasah.

763 Muhammad Abdul Wadud.
764 Muhammad Ibrahim Majumdar.

Tozkhali Junior Madrasah.

765 Muhammad Abdullah.
766 Muhammad Ismail.

Waruk Rahmania Junior Madrasah.

767 Abdul Majid Miyan.
768 Abu Jaafar Muhammad Sadiq.
769 Abul Hashem Muhammad Mahiuddin.
770 Dalilur Rahman.
771 Lutfur Rahman.
772 Muhammad Abdul Mannan.
773 Muhammad Abdus Sattar.
774 Muhammad Khalilullah Chaudhury.
775 Muhammad Moslehuddin.
776 Muhammad Rafiquddin Chaudhury.
777 Qazi Abul Husain.
778 Qazi Fazlur Rahman.
779 Serajuddin Akhand.
780 Shamsul Haq Miyan, I.

Meher Shahrasti High Madrasah.

781 Abdul Latif.
782 Abdus Samad.
783 Iman Ali.
784 Muhammad Khan.
785 Shamsul Hoq.

Banguri Junior Madrasah.

786 Abdul Karim Khondkar.
787 Abdul Majid.
788 Qazi Shamsuddin Ahmad.
789 Shamsuddin Ahmad.

Haripur Arafia Junior Madrasah.

790 Abul Bashr Muhammad Ibrahim.
791 Muhammad Siddiqur Rahman Mazumdar.

Shidlai Junior Madrasah.

792 Abdul Haq Akhan.
793 Abdul Majid.
794 Abdur Rauf.
795 Bazlur Rahman.
796 Nayeb Ali.
797 Shamsher Ali.
798 Shamsuddin Ahmad.

Chasai Junior Madrasah.

799 Abdur Rauf.
800 Hafizur Rahman Bhuiyan.
801 Muhammad Adam Ali Talukdar.
802 Muhammad Azizur Rahman.

Doulkhar Junior Madrasah.

803 Muhammad Buzruz Chaudhury.
804 Muhammad Sujaat Ali.

Rasulpur Junior Madrasah.

805 Abdul Ghani.
806 Abdul Halim.
807 Noorul Islam Chaudhury.

Burichang Junior Madrasah.

808 Abdul Bari.
809 Abdul Mannaf.
810 Saadat Ali.

Narandia Junior Madrasah.

811 Muhammad Abdul Mannaf.
812 Muhammad Husain.
813 Muhammad Mujibur Rahman Khan.

Singadda Junior Madrasah.

814 Abdul Majid.
815 Tamizuddin Patwari.

Nasirkot Junior Madrasah.

816 Abdul Majid Pradhania.
817 Abdur Rashid Patwari.
818 Muhammad Abul Qasem Khan.

Sholla Junior Madrasah.

819 Abdul Majid.
820 Anwarullah Bhuiyan.
821 Jinnat Ali.
822 Matiul Islam.
823 Shamsur Rahman.

Naori Junior Madrasah.

824 Muhammad Abdur Rahim.
825 Muhammad Dilwar Husain.
826 Muhammad Jainul Abedin.
827 Muhammad Nurul Islam.
828 Muhammad Sirajul Haq.

Kalirbazar Junior Madrasah.

829 Muhammad Abdul Halim.
830 Muhammad Chand Miyan.
831 Muhammad Sultan Patwari.

Unkila Junior Madrasah.

832 Abdul Manaf.
833 Muhammad Janab Ali.
834 Muhammad Nowab Ali.
835 Muhammad Sirajullah.
836 Muhammad Shamsul Haq.

Ludhua Junior Madrasah.

837 Muhammad Abdul Majid.
838 Muhammad Yunus Ali
839 Muhammad Habibur Rahman.
840 Muhammad Karamat Ali.

Bahari Junior Madrasah.

841 Muhammad Abbas Khan.
842 Muhammad Abdul Ghafur.
843 Muhammad Abdul Jalil.
844 Muhammad Abul Bashr.
845 Muhammad Altaf Husain.
846 Muhammad Basheer Husain.
847 Muhammad Hasan Ali.
848 Muhammad Kafiluddin.
849 Muhammad Nawab Ali.
850 Kazi Muhammad Shamsuddin.
851 Shamsul Hufla.

Ekhlaspur Junior Madrasah.

852 Ali Muzaffar.
853 Muzammel Haq.
854 Muhammad Idris.
855 Shaikhul Islam.

Mahamaya Junior Madrasah.

856 Muhammad Abdul Khaliq Tafadar.
857 Muhammad Faizuddin Khan.
858 Muhammad Hedayetullah Khan.
859 Muhammad Khalilur Rahman.
860 Muhammad Sirajul Islam Patwari.
861 Muhammadullah Patwari.

Naobhanga Jaipur Junior Madrasah.

862 Muhammad Matiur Rahman.

Safarmali Junior Madrasah.

863 Abul Fazal Muhammad Abdul Aziz.
864 Abul Fazle Muhammad Abdul Jalil.
865 Abul Kalam Muhammad Abdul Jabbar.
866 Abul Kalam Muhammad Abdul Majid.
867 Abul Khair Muhammad Abdul Khaliq.
868 Abul Khair Muhammad Abdul Qadir.
869 Abul Khair Muhammad Mamtazuddin.
870 Abu Nasr Muhammad Jainul Abedin.
871 Abu Yusuf Muhammad Shahabuddin.
872 Dewan Muhammad Tofazzul Husain.
873 Muhammad Abdul Aziz Akhand.
874 Muhammad Abdul Hafiz.
875 Muhammad Abdul Hamid.
876 Muhammad Abdul Jalil Khan.
877 Muhammad Abdul Wahhab.
878 Muhammad Obaidullah.
879 Muhammad Rahmat Ali.
880 Muhammad Tafazzul Husain.
881 Kazi Muhammad Sikandar.

Aswinpur Junior Madrasah.

882 Muhammad Abdul Jalil.
883 Muhammad Abu Jaafar Sikdar.
884 Muhammad Abdul Majid.
885 Muhammad Hashmat Ali Sarkar.
886 Muhammad Sirajuddin.

Rampurbazar Junior Madrasah.

887 Muhammad Abdus Salam.
888 Muhammad Jainul Abedin.

Nandanpur Junior Madrasah.

889 Aminul Islam.

Hoglakandi Junior Madrasah.

890 Abdul Latif.

Majidpur Azizia Junior Madrasah.

891 Abdul Ali.

Bagdail Junior Madrasah.

892 Muhammad Fazlul Karim.
893 Sultan Ahmad.

Noakhali District.

Katghar Junior Madrasah.

894 Muhammad Osman Chani.

Kuchiamora Junior Madrasah.

895 Mudassar Ahmad

Mutiganj Junior Madrasah.

896 Basheer Ahmad.

Sharisadi Junior Madrasah.

897 Abul Hashem.
898 A. S. M. Mufizur Rahman.
899 Nazir Ahmad.
900 Waliur Rahman.

Santoshpur Junior Madrasah.

901 Mukhlesur Rahman.

Chhagalnaiya Junior Madrasah.

902 Abul Khair Muhammad Shamsul Islam Chaudhury.
903 Abdul Wadud Khondkar.
904 Muhammad Ishaq Majumdar.

Khaira Junior Madrasah.

905 Muhammad Idris.

Nichahara Junior Madrasah.

906 Muhammad Abdul Mannan.
907 Muhammad Shaflullah.

Ahmadia High Madrasah.

908 Abul Quasem Muhammad Hashem.
909 Abu Nasar Muhammad Abdul Hai.
910 Jalal Ahmad.
911 Khaja Ahmad.
912 Muhammad Abdur Rahim.
913 Nurul Huda.
914 Shamsul Haq.

Shonapur Junior Madrasah.

915 Abdur Rahman.
916 Muminullah.
917 Muhammad Azhar.

Lemua Junior Madrasah.

918 Muhammad Azizullah.
919 Muhammad Shamsul Haq.
920 Muhammad Surajul Haq.

Ekhlashpur Junior Madrasah.

921 Muhammad Ali Azam.

Bhatra Junior Madrasah.

922 Muhammad Sultan Ahmad Tafadar.

Bhimpur Junior Madrasah.

923 Abdul Latif.
924 Abdul Mannan.
925 Maklesur Rahman.
926 Nur Muhammad.
927 Surut Miyan.

Senbag Junior Madrasah.

928 Muhammad Abdul Latif.
929 Muhammad Shamsul Haq.

Rokanpur Junior Madrasah.

930 Jinnat Ali.

Koroa Junior Madrasah.

931 Abdul Khaliq.
932 Abdul Qadir.
933 Rahat Ullah.

Jibnagar Junior Madrasah.

934 Muhammad Abdul Haq.
935 Muhammad Imdadullah.
936 Muhammad Mazharul Hannan.
937 Muhammad Mukhlesur Rahman.
938 Muhammad Nurul Haq.

Palpara Junior Madrasah.

939 Muhammad Fazlur Rahman.
940 Muhammad Nurul Haq, I.

Rakhalia Junior Madrasah.

941 Siddiqullah.

Keramatganj Junior Madrasah.

942 Abul Qasem Muhammad Hedayetullah.
943 Abu Jaafar Muhammad Syedul Haq.

Dashpara Junior Madrasah.

944 Abul Bashr Ahmadullah.
945 Abu Sayeed Ahmad.
946 Muhammad Fazlul Haq.
947 Muhammad Mafazzel Husain.
948 Syed Jalal Ahmed.

Barahinagar Junior Madrasah.

949 Muhammad Aminullah.
950 Muhammad Nurul Haq.

Khagaria Junior Madrasah.

951 Waliullah.

Lakshmipur High Madrasah.

952 Muhammad Abdul Jabbar.
953 Muhammad Ghulam Mustafa.
954 Shahabuddin Ahmad.
955 Siddiq Ahmad.
956 Sultan Ahmad.

Badalkot Junior Madrasah.

957 Hedayetullah.

Punianagar Junior Madrasah.

958 Muhammad Osman Ali.
959 Muhammad Rafiqullah.

Hajirhat A. Rub Junior Madrasah.

960 Ali Ahmad.

Bhabanijibanpur Junior Madrasah.

961 Muhammad Serajul Huq.

Rajshahi District.

Chabbisnagar Junior Madrasah.

962 Muhammad Nasimuddin Mondal.
963 Nur Muhammad Mondal.
964 Muhammad Tofazzal Hossain.

Rajshahi Madrasah.

965 Ayazuddin Ahmad
966 Muhammad Abdul Quader.
967 Khondoker Azizar Rahman.
968 Abdul Hamid Sarkar.
969 Muhammad Zainul Abedin.
970 Mahboob-i-Elahi.
971 Muhammad Abdul Ghaffar Sarkar.
972 Muhammad Khairullah.
973 Muhammad Abdul Aziz.
974 Muhammad Fasiruddin.
975 Muhammad Jaafar Sadiq.
976 Muhammad Hashmatullah.
977 Muhammad Irshad Ali.
978 Muhammad Ishaq Khondkar.
979 Muhammad Abul Husain.
980 Muhammad Akhtaruzzaman.
981 Muhammad Qamaruddin.
982 Muhammad Mazharul Haq, I.
983 Muhammad Mazharul Haq, II.
984 Khondkar Lutfur Rahman.

Baneswar N. N. Junior Madrasah.

985 Muhammad Abdul Karim Khan.
986 Khondkar Md. Moyeenuddin.
987 Muhammad Abdul Ghafur.
988 Muhammad Israil Husain Talukdar.
989 Muhammad Abdus Sattar.
990 Abul Fatah Muhammad Asaruddin.
991 Muhammad Hilaluddin.
992 Muhammad Abdul Qadir.

Bhatra Momineen Junior Madrasah.

993 Md. Qasim Ali.
994 Md. Ebadat Ali.
995 Md. Abed Ali.
996 Md. Abdus Subhan Mian.
997 Md. Kayemuddin.
998 Md. Ayet Ali Shaikh.

Matikata Junior Madrasah.

999 Md. Abdul Hamid.
1000 Md. Sadiq.
1001 Md. Mohsin Ali.

Chak Nazirpur Junior Madrasah.

1002 Muhammad Maula Baksh.
1003 Muhammad Shamsuddin Khondkar.

Neyamatpur Junior Madrasah.

1004 Md. Abdur Rauf Mondal.
1005 Md. Ibrahim Choudhury.

Bhatsail Junior Madrasah.

1006 Md. Bayanuddin Khan.

Nanuj Kalimia Junior Madrasah.

1007 Md. Jasimuddin.
1008 Mir Md. Qamaruzzaman.

Naogaon Co-operative Junior Madrasah.

1009 Muhammad Habibur Rahman.
1010 Muhammad Kazem Ali.
1011 Muhammad Ead Ali.
1012 Tasiruddin Ahmad.
1013 Muhammad Ajibur Rahman.
1014 Muhammad Abdul Wahed.
1015 Muhammad Kofiluddin Khan.
1016 Muhammad Taleb Ali.
1017 Muhammad Tazimuddin.

Joanpur Junior Madrasah.

1018 Md. Abiruddin Mian.
1019 Md. Habibur Rahman Pramanik.
1020 Md. Reazuddin Mondal.
1021 Md. Abdul Ghafur Sardar.

Jantigram Junior Madrasah.

1022 Md. Shamsuddin Dewan.
1023 Md. Abdur Rahman Mian.
1024 Md. Jamiruddin Mian.

Rajshahi Girls' Junior Madrasah.

1025 Alema Khatun.
1026 Jahanara Khatoon.
1027 Zebun Nesa.
1028 Shamsun Nehar.
1029 Shaimon Nesa.
1030 Mohbuba Amena Khatun.

Malda District.

Nama Sankarbati Junior Madrasah.

1031 Mosammat Gole Sahara Khatun.
1032 Md. Saiful Islam.
1033 Muhammad Mohiuddin.
1034 Md. Fazlur Rahman.
1035 Md. Sajjad Hossain.
1036 Mosammat Sophia Khatun.
1037 Muhammad Serajul Islam.
1038 Md. Tamizuddin.
1039 Muhammad Abdul Hakim.
1040 Muhammad Abdus Sattar.

Binodepur Junior Madrasah.

1041 Abdus Samad.
1042 Tafazzal Haq.

Malda Model Madrasah.

1043 Abdul Majid.
1044 Abdul Quddus.

Noya Mauza Subhania Junior Madrasah.

1045 Md. Abdur Rashid.
1046 Md. Saifuddin.
1047 Md. Anwar Ali.

Chakkirti Junior Madrasah.

1048 Lal Muhammad.
1049 Amjad Hussain.

Chak Alampur Junior Madrasah.

1050 Nur Muhammad Mian.
1051 Muhammad Afsar Ali.
1052 Muhammad Faizuddin.
1053 Muhammad Shamsul Haq.
1054 Muhammad Tafazzal Haq.
1055 Muhammad Zillur Rahman.
1056 Muhammad Wilayat Ali.

Baliadanga Junior Madrasah.

1057 Muhammad Muazzom Hosain.
1058 Muhammad Zaynul Abedin.
1059 Muhammad Abdul Ghaffur.
1060 Siddiq Ahmad.
1061 Din Muhammad.
1062 Muhammad Muniruzzaman.
1063 Mosammat Sajeda Khatun.

Hemayet Memorial High Madrasah.

1064 Manzur Ahmad.
1065 Muhammad Rustam Ali.
1066 Raisuddin Ahmad.
1067 Muhammad Jonab Ali.
1068 Muhammad Daud.
1069 Muhammad Hedayetullah.
1070 Muhammad Mozaffar Hossain.

Rangpur District.

Khalisha Dhulia Junior Madrasah.

1071 Md. Ashrafuddin.

Bakshiganj Junior Madrasah.

1072 Md. Chhanaullah.

Haragach High Madrasah.

1073 Ahmad Ali.
1074 Muhammad Abdul Muttaleb.
1075 Muhammad Nezamuddin.
1076 Muhammad Sultanuddin.

Rangpur Junior Madrasah.

1077 Abul Mansur.
1078 Aftabuddin Ahmad.
1079 Saiyid Abul Masud.
1080 Muhammad Basimuddin.

Kaliganj Junior Madrasah.

1081 Muhammad Ishaq Ali Mandal.

Phulbari Junior Madrasah.

1082 Akbar Ali Mian.

Ballamjhar Ainul Ulum Junior Madrasah.

1083 Md. Abdul Qadir.

Routhpara Junior Madrasah.

1084 Md. Nasiruddin.

Rasulpur Junior Madrasah.

1085 Md. Abdul Ghani, I.
1086 Md. Ahmadur Rahman.
1087 Md. Diyanat Ali.
1088 Md. Abdul Ghani, II.

Jalalia Junior Madrasah, Mahiganj.

1089 Shamsuddin Ahmad.

Krishnapur Junior Madrasah.

1090 Md. Abdul Jabbar.

Gopalpur Hamidia Junior Madrasah.

1091 Md. Shamsul Haq Shah.
1092 Md. Mufizuddin Akanda.
1093 Shah Md. Abdul Bari.

Panga Junior Madrasah.

1094 Muhammad Siddique Hossain.

Nageswari Karamatia Junior Madrasah.

1095 Md. Heshmatullah Mian.
1096 Md. Abdus Sattar Mian.

Batikamari Junior Madrasah.

1097 Tajul Islam Muhammad Afsaruddin.
1098 Abul Khair Muhammad Nasimuddin.

Pakuria Sharif Junior Madrasah.

1099 Md. Rahimuddin.
1100 Md. Aftabuddin.
1101 Md. Abdul Ghani.

Pargoyra Junior Madrasah.

1102 Qazi Jamaluddin Ahmad.

Chilmari Junior Madrasah.

1103 Shah Muhammad Abul Husain.

Gunaigachh Junior Madrasah.

1104 Md. Abdul Jabber Mondal.
1105 Md. Mizanuddin.
1106 Md. Mofizuddin.
1107 Md. Amiruddin.
1108 Md. Abul Bashr.
1109 Md. Azizul Haque.
1110 Md. Khabiruddin.

Chhoygharia Junior Madrasah.

1111 Ibu Bashir Muhammad Omar.
1112 Muhammad Asaruddin.
1113 Muhammad Qudratulla.
1114 Muhammad Abdul Karim, II.

Kuptola Junior Madrasah.

1115 Badiuzzaman Sarkar.
1116 Zainuddin Ahmad.
1117 Md. Abdul Baqui.

Mahimganj Junior Madrasah.

1118 Muhammad Nazir Husain.

Khalisha Belpukur Junior Madrasah.

1119 Md. Kasiruddin.
1120 Muhammad Omar Ali Fakir.
1121 Abdur Rahman.
1122 Abul Bashar Muhammad Atharul Islam.
1123 Muhammad Moslem Mian.
1124 Muhammad Kobaduddin.

Berakuthi H. I. Junior Madrasah.

1125 Md. Nawab Ali.
1126 Md. Jamiruddin.

Dinajpur District.

Porsha Junior Madrasah.

1127 Shah Fazlul Haq Choudhury.
1128 Shah Muhammad Khalil Choudhury.
1129 Md. Abdul Rauf Tarafdar.
1130 Shah Hafizul Haq Choudhury.
1131 Shah Abdus Salam Choudhury.
1132 Shah Zainul Abedin Choudhury.

Noorul Majid Junior Madrasah.

1133 Md. Ashrafuddin.
1134 Md. Badiuzzaman.
1135 Md. Mahtabuddin.
1136 Izharul Haq.
1137 Md. Kafiluddin Pramanik.

Nurul Huda Junior Madrasah.

1138 Wafa Khatun
1139 Md. Nasiruddin.
1140 Imaduddin Ahmad.
1141 Md. Abdul Matin.
1142 Ahmad Ali.
1143 Md. Sakhawat Ali.
1144 Md. Abed Ali Pramanik.
1145 Md. Darajuddin.
1146 Md. Abdul Baset.

Deogaon Junior Madrasah.

1147 Md. Abdul Aziz Mondal.
1148 Amiruddin Ahmad.
1149 Md. Shah Awsafur Rahman.

Baragram Junior Madrasah.

1150 Muhammad Azizur Rahman.
1151 Muhammad Mozammel Haque.

Golapbag Junior Madrasah.

1152 Syed Azimuddin Ahmad.
1153 Md. Abdul Majid.
1154 Nasiruddin Ahmad.
1155 Md. Asgar Ali.

Farsipara Junior Madrasah.

1156 Reazuddin Ahmad.
1157 Syed Abul Fazal Md. Rafiqul Alam.

Teghara Matial Islam Junior Madrasah.

1158 Aftabuddin Ahmad.

Kashiadanga Junior Madrasah.

1159 Abul Mansur Tahiruddin Ahmad.
1160 Abul Khayer Rahimuddin Ahmad.
1161 Abul Fazle Md. Muniruddin.

Jagannathpur Junior Madrasah (Dinajpur Sadar).

1162 Md. Khalilur Rahman.
1163 Azimuddin Ahmad.

Vaior M. S. Jalal Junior Madrasah.

1164 Md. Abdus Salam Khondoker.

Salekhuri Mofid-I-Am Junior Madrasah.

1165 Abul Halim Muhammad Abdur Rahim Askari.
1166 Abul Wakil Md. Kafil Uddin Shahid.
1167 Abul Barakat Md. Shahadat Husain.
1168 Abul Bayan Md. Abdul Hannan Fasih.

Jalpaiguri District.

Sonapur Ekramia Junior Madrasah.

1169 Md. Salimuddin.

Putimari Junior Madrasah.

1170 Saiyid Ghulam Mustafa.

Mirgarh Junior Madrasah.

1171 Md. Fazlul Haque.
1172 Md. Taslimuddin.

Bogra District.

Hanail Junior Madrasah.

1173 Md. Abu Taleb Mian.
1174 Md. Abul Quasem Mian.
1175 Md. Gowhar Ali Mian.

Itakhola Junior Madrasah.

1176 Md. Abdus Shukoor.
1177 Md. Maziruddin.
1178 Md. Ishaque Ali.

Baniapara Junior Madrasah.

1179 Muhammad Nasiruddin Mondal.
1180 Muhammad Muizzuddin Sarkar.
1181 Abu Abdus Subhan Md. Ramzan Ali.

Shalgram Junior Madrasah.

1182 Muhammad Zainul Abedin, I.

Baluahat Junior Madrasah.

1183 Muhammad Mujibar Rahman.

Tekharibisha Junior Madrasah.

1184 Muhammad Wayezuddin.
1185 Muhammad Sulaiman.
1186 Muhammad Zamiruddin.
1187 Muhammad Azimuddin.

Abhirampur Junior Madrasah.

1188 Md. Darasuddin.

Shibganj Husainia Junior Madrasah.

1189 Md. Hafizuddin.
1190 Md. Mutiur Rahman.
1191 Md. Tamizuddin.

Murtazapur Junior Madrasah.

1192 Muhammad Irshad Ali Miyan.

Hat Sherpur Junior Madrasah.

1193 Md. Azizur Rahman Miyan.
1194 Laal Muhammad Miyan.

Domanpukur Junior Madrasah.

1195 Muhammad Abdul Karim.
1196 Muhammad Muniruddin.

Baiguni Junior Madrasah.

1197 Md. Shafiuddin.

Dhapsultanganj Junior Madrasah.

1198 Mumtaz Ali Khan.
1199 Shahadat Ali Dewan.

Jaguli Junior Madrasah.

1200 Md. Mazhar Ali.
1201 Md. Kafiluddin.
1202 Md. Abdul Hakim.
1203 Md. Mujibur Rahman.

Bogra Central High Madrasah.

1204 Muhammad Masiruddin.
1205 Muhammad Mahboobur Rahman.
1206 Muhammad Ghulam Rabbani.
1207 Muhammad Jasimuddin.
1208 Muhammad Abdur Rahman.
1209 Muhammad Taslimuddin.

Yakubia Girls' Junior Madrasah.

1210 Musammat Samarun Nesa.
1211 Musammat Sayeda Khatun.

Huakua Junior Madrasah.

1212 Md. Shamsuddin.
1213 Md. Tabarak Ali.

Mahasthan Junior Madrasah.

1214 Md. Ayet Ali Khondokar.
1215 Muhammad Idris.

Panchgram Junior Madrasah.

1216 Mir Abdus Samad.

Pabna District.

Pabna Islamia Junior Madrasah.

1217 Md. Talib Husain.
1218 Md. Tajuddin.
1219 Md. Husain Ali.
1220 Ahmad Husain.

Tarabaria Junior Madrasah.

1221 Md. Abdur Rahman.
1222 Md. Akbar Ali Khondker.

Beara Nur Nabi Junior Madrasah.

1223 Muhammad Abdul Hakim.
1224 Md. Elahi Baksh.

I. I. College, Serajganj.

1225 Muhammad Hatem Ali.
1226 Dewan Moyeenuddin.
1227 Muhammad Abdur Rashid.
1228 Muhammad Abdul Hannan.
1229 Muhammad Abdul Aziz.
1230 Muhammad Abul Husain, II.

Ullapara Junior Madrasah.

1231 Md. Asghar Ali.
1232 Md. Ismail Husain.
1233 Md. Abdul Latif.
1234 Md. Azizul Haq.

Chinadhukuria Junior Madrash.

1235 Md. Wilayet Hosain Mian.
1236 Md. Matiur Rahman.
1237 Md. Maksad Ali.

Enayetpur Junior Madrasah.

1238 Md. Abdul Khaliq Mian.
1239 Md. Ashraf Ali Munshi.

Barahar Islamia Junior Madrasah.

1240 Md. Habibur Rahman.
1241 Md. Janab Ali Akanda.

Sambhudia Junior Madrasah.

1242 Muhammad Abdur Rahman.
1243 Muhammad Asghar Ali.
1244 Muhammad Qurban Ali.

Tamai Junior Madrasah.

1245 Muhammad Sanaullah.
1246 Muhammad Rahmatullah.
1247 Muhammad Sanawar Husain.

Nakalia Islamia Junior Madrsah.

1248 Muhammad Ismail Husain.
1249 Muhammad Kafiluddin.

Talimnagar Junior Madrasah.

1250 Md. Asiruddin Khan.
1251 Md. Abdul Mannan Khan.

Cooch Behar.

Daribash Junior Madrasah.

1252 Md. Abdul Ghafur Mian.
1253 Md. Affazuddin.
1254 Md. Muqaddas Ali.
1255 Md. Nadir Hussain.

SECOND DIVISION.

Bankura District.

Rasulpur Junior Madrasah.

1 Muhammad Abu Tayyeb.

Burdwan District.

Pubar Junior Madrasah.

2 Shaikh Muhammad Moslem.
3 Shaikh Osikar Rahman.
4 Shaikh Abdus Salam.

Ukhrid Junior Madrasah.

5 Sabed Mulla.
6 Kazi Muhammad Morteza.
7 Mulla Samsher Alam, No. I.

Karajgram Junior Madrasah.

8 Choudhury Gholam Pir.

Birbhum District.

Sekeddah Junior Madrasah.

9 Zuhurul Islam.

Barasija Junior Madrasah.

10 Muhammad Anisur Rahman.
11 Shaikh Muhammad Mohsin Ali.

Dumurgram Junior Madrasah.

12 Md. Eshaque.

Palita Junior Madrasah.

13 Mir Md. Khalilur Rahman.
14 Shaikh Md. Anisur Rahman.
15 Shaikh Md. Ayub.
16 Shaikh Saad Yamani.

Midnapore District.

Potashpur Junior Madrasah.

17 Shaikh Samiruddin Ahmad.
18 Shaikh Fazlur Rahman.

Darua Rahmania Junior Madrasah.

19 Shaikh Jalal Uddin.

Hooghly District.

Dharsa Junior Madrasah.

20 Abdul Kader.
21 Md. Nurul Hudah Mulla.

Bara Rambha Junior Madrasah.

22 Muhammad Yusuf Ali Mian.

Keshabpur Junior Madrasah.

23 Shamsuddin Mullick.

Furfura High Madrasah.

24 Md. Iman Ali.
25 A. K. Md. Shamsul Huq.

Ramchandrapur Junior Madrasah.

26 Kazi Abdul Hoque.

Udna Kaderia Junior Madrasah.

27 Shaikh Muhammad Abdul Kayum.
28 Syed Abdul Kuddush.

Donk Junior Madrasah.

29 Muhammad Isa.
30 Muhammad Abul Hafiz.

Dharampur Junior Madrasah.

31 Muhammad Abdur Rahim.

Howrah District.

Panchla Junior Madrasah.

32 Shaikh Nazir Ahmad.

Basantapur Junior Madrasah.

33 Md. Abdul Jabbar Mullick.
34 Md. Maqbul Husain.

Bankul Junior Madrasah.

35 Kazi Gholam Kibria.

Calcutta District.

Baniapukur Junior Madrasah.

36 Muhammad Ishaque.
37 Muhammad Manzoor Alam.

24-Parganas District.

Akra Junior Madrsah.

38 Md. Abdul Ghani.
39 Mohammad Ali.
40 Mohammad Islam.
41 Tofazzal Hossain.

Magrahat Junior Madrasah.

42 Mir Muhammad Daud Ali.
43 Mohammad Shah Jamal.

Khosdelpur Junior Madrasah.

44 Mohammad Abdur Rahim.
45 Mohammad Tazammal Hussain.
46 Shaikh Md. Yaqub.

Netra Furrokh Junior Madrasah.

47 Md. Abed Ali Khan.
48 Md. Mofizuddin.

Nagarpur Junior Madrasah.

49 Md. Alauddin.

Tilpi Junior Madrasah.

50 Mobarak Ali Gazi.
51 Abdul Jabbar Laskar.

Nadia District.

Krishnagar Ezechiel Junior Madrasah.

52 Muhammad Qaisar Ali.

Beltala Junior Madrasah.

53 Azizur Rahaman Molla.

Santipur Junior Madrasah.

54 Shamsul Arefin.

Chuadanga Junior Madrasah.

55 Mohammad Abu Shaleh.

Dansha Junior Madrasah.

56 Muhammad Nawab Ali.

Panti High Madrasah.

57 Abul Khair Md. Atiar Rahman Khan.
58 Mohammad Abdul Wahed.
59 Nur Muhammad Biswas.

Murshidabad District.

Jangipur High Madrasah.

60 Abdur Rouf Shaikh.
61 Moazzem Hosain.
62 Muhammad Faizuddin.
63 Muhammad Idris.

Jhumka Junior Madrasah.

64 Muhammad Kalimuddin.
65 Muhammad Mas-ud.
66 Muhammad Shamsul Haq.
67 Shaikh Mohiuddin.

Bhabta Azizia Junior Madrasah.

68 Muhammad Abdus Salam (A).

Madanpur Junior Madrasah.

69 Muhammad Abdul Jabbar Shaikh.
70 Muhammad Gholam Rais.
71 Muhammad Zamiruddin Mondal.

Lalgola Junior Madrasah.

72 Reazuddin Ahmad (I).

Muhammadpur Junior Madrasah.

73 Yar Ali Biswas.

Shibnagar Junior Madrasah.

74 Liaqatullah.

Manikchak Junior Madrasah.

75 Muhammad Fazle Rabbee.

Berdhanpur Junior Madrasah.

76 Chaturuddin Mian.
77 Bakaitulla Mandal.

Jessore District.

Garaganj Junior Madrasah.

78 Muhammad Ismail Hussain.

Lahuria Junior Madrasah.

79 Syed Abul Khalid Muhammad Ali Akbar.
80 Muhammad Abdus Sattar Khan.
81 Abu Muhammad Molla.

Raghunathnagore Junior Madrasah.

82 Sadaruddin Ahmad.
83 Muhammad Izzat Ali.

Basundia Junior Madrasah.

84 Sheikh Muhammad Neyamatulla.

Khairtala Junior Madrasah.

85 Abul Khair Muhammad Iman Ali.
86 Mohiuddin Ahmad.
87 Muhammad Sharfuddin.

Durmutia Junior Madrasah.

88 Muhammad Iman Ali.

Jhikergacha Junior Madrasah.

89 Muhammad Abdul Jalil.
90 Muhammad Musa.

Maulanabad Junior Madrasah.

91 Abdus Sattar.
92 Abu Khalid Muhammad Abdul Wahid.
93 Abul Qasem Muhammad Abdus Subhan.
94 Syed Sharafat Hussain.
95 Syed Najibur Rahman.

Alukdia Pukhuria Junior Madrasah.

96 Molla Badruddin.
97 Sheikh Mozharuddin.
98 Sheikh Abdul Ghani.

Magura High Madrasah.

99 Syed Abu Nayeem.
100 Khan Abdul Mottaleb.
101 Muhammad Ansaruddin.
102 Muhammad Nizamuddin.
103 Muhammad Habibur Rahman.
104 Muhammad Abdus Salam.

Khulna District.

Bowkola Junior Madrasah.

105 Muhammad Jafar Ali Khan.

Kalaroa Junior Madrasah.

106 Afiluddin Ahmad.
107 Muhammad Shamsul Huq.

Bagerhat Junior Madrasah.

108 Paik Wakiluddin.
109 Shaikh Abdur Ruzzak.

Baintala Junior Madrasah.

110 Mullah Fazle Karim.
111 Syed Hatem Ali.

Barakatali Junior Madrasah.

112 Ghaznabi Sultan Mahmood.
113 Shaikh Iman Ali.
114 Shaikh Shahar Ali.

Baruikhali Junior Madrasah.

115 Khan Asmat Ali.
116 Muhammad Nizamuddin.

Bhabna Junior Madrasah.

117 Muhammad Maser Ali.

Daulatpur Junior Madrasah.

118 Khondkar Nur Muhammad.
119 Qazi Mansur Ahmad.

Dhoradoa Junior Madrasah.

120 Muhammad Abdul Qader.
121 Muhammad Abdul Wahid Khan.
122 Muhammad Buzrug Ali.

Hakimpur Junior Madrasah.

123 Haldar Muhammad Abu Bakar.
124 Sardar Muhammad Zahurul Huq.

Hazrakhali Junior Madrasah.

125 Bali Alauddin.

Jamira Siddiqia Junior Madrasah.

126 Muhiuddin Ahmad.

K. B. Fatehpur Junior Madrasah.

127 Howladar Hashem Ali.
128 Mallik Akbar Ali.

Khanjahania Junior Madrasah.

129 Khondkar Imanuddin.
130 Quazi Farrokhuddin.

Khontakata Junior Madrasah.

131 Muhammad Yasin Uddin Sardar.

Khulna Yusufia High Madrasah.

132 Shaikh Abdul Jabbar.
133 Shaikh Muhammad Matiur Rahman.

Madhabkati Junior Madrasah.

134 Mullah Abdur Rahman.
135 Muhammad Abdur Rasheed.
136 Muhammad Shariff.

Panchgaon Salimabad Junior Madrasah.

137 Ali Akbar Khan.
138 Moslem Ali Mullah.
139 Syeduddin Ahmad.

Phultala Junior Madrasah.

140 Abdur Razzak.
141 Mominuddin Ahmad.
142 Motahar Ali.
143 Rahim Bukhsh Sardar.

Rajpat Junior Madrasah.

144 Muhammad Entaser Ali.

Torakhada Junior Madrasah.

145 Mullah Abdullah.
146 Mullah Gholam Rabbani.

Borni Sairabad Junior Madrasah.

147 Shaikh Muhammad Abul Hashem.

Dacca District.

Dacca Government Madrasah.

148 Muhammad Abdul Rub.

Ramerkanda Junior Madrasah.

149 Noor Muhammad.

Mirpur Mufid-i-a Junior Madrasah.

150 Muhammad Habibur Rahman.
151 Muhammad Rahimuddin.

Paikpara Junior Madrasah.

152 Abdur Rahim Khan.
153 Ahmad Hussain Khan.
154 Fazlur Rahman Khan.
155 Md. Abdul Jalil.
156 Md. Maisiruddin.
157 Tafazzal Hussain Khan.
158 Muhammad Abul Hussain.

Ekdala Junior Madrasah.

159 Md. Hassain Ali Akhond.
160 Mir Muhammad Ashraf.
161 Md. Hafizuddin Sheikh.

Islamabad Junior Madrasah.

162 Ahmad Ali Mullah.
163 Muhammad Abdus Samad.
164 Md. Abdul Karim.
165 Md. Shamsul Huda.

Pipulia Junior Madrasah.

166 Jalaluddin Ahmad.

Bachamara Junior Madrasah.

167 Muhammad Abed Ali.
168 Muhammad Akbar Hussain.
169 Md. Abdur Razzaque.
170 Md. Abdul Karim.
171 Md. Lokman Hussain, I.
172 Md. Abdus Samad.
173 Md. Mansur Rahman.

Hammadia High Madrasah.

174 Md. Keramat Ali.

Madhyerchar Junior Madrasah.

175 Muhammad Abdul Quadir Miah, I.
176 Muhammad Abdul Quadir Miah, II.

Dakhincharigaon Junior Madrasah.

177 Aolad Hussain Bhuian.

Brahmandi Junior Madrasah.

178 Muhammad Keramat Ali.
179 Muhammad Idris Ali.

Syedpur Junior Madrasah.

180 Muhammad Faizul Huq.
181 Abdul Malek.
182 Siddiqur Rahman.

Karimganj Junior Madrasah.

183 Hormuz Ahmad Khan.
184 Abdur Rahman Khan.

Binnabaid Junior Madrasah.

185 Abdul Kadir.
186 Abdul Majid.

Bajbi Mufidia Junior Madrasah.

187 Muhammad Abdus Subhan.
188 Muhammad Abdus Samad.
189 Muhammad Abu Zaafar.

Rampal Junior Madrasah.

190 Hafiz Muhammad Ali Hussain.
191 Muhammad Newaz Ali.
192 Muhammad Sarwaruddin Khan Dakir.

Malibagh Junior Madrasah.

193 Muhammad Serajul Islam.

Lesraganj Junior Madrasah.

194 Muhammad Yasin Khan.
195 Muhammad Ahamadul Haque Miah.

Mymensingh District.

Osmanpur Junior Madrasah.

196 Muhammad Abdul Halim.

Halimpur Junior Madrasah.

197 Abdul Khaleque.

Kalikaprosad Junior Madrasah.

198 Muhammad Ansar Ali.

Kazirchar Junior Madrasah.

199 Muhammad Moniruzzaman.
200 Muhammad Sirajul Islam.

Pakundia High Madrasah.

201 Muhammad Saheruddin.

Hazrabari High Madrasah.

202 Shah Muhammad Abdul Awal.
203 Muhammad Abdul Qader.

Muzaffarpur Junior Madrasah.

204 Muhammad Taheruddin.

Dhanikhola Junior Madrasah.

205 Muhammad Taleb Hossain.
206 Muhammad Abdul Hakim.
207 Muhammad Abdul Ali.
208 Muhammad Muzaffar Hossain.
209 Muhammad Rajjab Ali.

Shakhua Junior Madrasah.

210 Muhammad Hasan Ali.
211 Muhammad Abdul Quayyum.
212 Muhammad Ebadullah.

Assim Junior Madrasah.

213 Muhammad Hussain Ali.
214 Muhammad Abul Hussain.
215 Muhammad Mansur Ali.

Kakanhati Junior Madrasah.

216 Muhammad Abdul Hakim Mia.
217 Muhammad Monsur Rahman Sarkar.

Shibrampur Junior Madrasah.

218 Muhammad Hossain Ali.

Paikura Junior Madrasah.

219 Muhammad Abul Hussain.
220 Muhammad Umed Ali.
221 Muhammad Safiruddin.
222 Muhammad Ali.
223 Muhammad Amir Hussain.

Kishoreganj Junior Madrasah.

224 Muhammad Salimuddin.
225 Khandakar Muhammad Hanifuddin.
226 Muhammad Babar Ali.

Maheshpur Junior Madrasah.

227 Muhammad Faizuddin.
228 Muhammad Ansaruddin.

Bhalukjan Junior Madrasah.

229 Muhammad Altaf Hussain.
230 Muhammad Mufizuddin.

Datterbazar Junior Madrasah.

231 Shamsuddin Ahmad.

232 Muhammad Ismail, I.

Barabaria Junior Madrasah.

233 Muhammad Abdur Razzaque.

Banbangla Junior Madrasah.

234 Muhammad Kutubuddin Talukdar.
235 Mir Muhammad Abdul Aziz.

Mukshapur Junior Madrasah.

236 Muhammad Waizuddin.
237 Muhammad Afazuddin.

Bashati Junior Madrasah.

238 Muhammad Abdul Gaffur.

Maijbhag Panchpara Junior Madrasah.

239 Muhammad Abdur Razzak Bhuyan.

Balijuri Junior Madrasah.

240 Muhammad Abdul Awal.
241 Muhammad Muzibar Rahman.

Gobindapur Junior Madrasah.

242 Muhammad Tafazzal Hussain Khandaker.

Raghunathpur Junior Madrasah.

243 Muhammad Sulaiman.

Jagatpura Junior Madrasah.

244 Giasuddin Mian.
245 Kazi Habibar Rahman.

Jamalpur Hedayetia Junior Madrasah.

246 Muhammad Amzad Hossain.

Srirampur Junior Madrasah.

247 Muhammad Abdur Rahman Akanda.
248 Muhammad Jubair Ali Miah.

Kochandhara Junior Madrasah.

249 Muhammad Imam Ali.
250 Muhammad Rostam Ali.

Jhalopara Junior Madrasah.

251 Muhammad Hatom Ali Miah.
252 Abdul Latif Talukdar.
253 Muhammad Abdul Mazid.
254 Muhammad Raisuddin.

Narayankhola Junior Madrasah.

255 Muhammad Husain Ali.
256 Muhammad Jalaluddin.

Gopalkhila Junior Madrasah.

257 Muhammad Eusof Ali.

Sherpur Junior Madrasah.

258 Muhammad Zila Bakhsh.
259 Muhammad Abdur Rahman.
260 Muhammad Maqsood Ali, I.
261 Muhammad Muinuddin Ahmad.

Banagram Junior Madrasah.

262 Ahmadullah.

Sontia Junior Madrasah.

263 Muhammad Keramat Ali.

Mahishbathan Junior Madrasah.

264 Muhammad Abdul Majid.
265 Muhammad Abdur Rafique.
266 Muhammad Mobarak Ali.
267 Muhammad Ataur Rahman Talukder.

Patadaha Junior Madrasah.

268 Muhammad Monsur Rahman Khan.
269 Muhammad Abdul Gafur Fakir.

Ramnagar Tarakanda Junior Madrasah.

270 Muhammad Abdul Ghani.

Madanpur Junior Madrasah.

271 Muhammad Habibur Rahman Faquir.
272 Abdul Khalique Faquir.
273 Muhammad Wares Ali.
274 Maqbul Hossain Ahmad.

Bali Junior Madrasah.

275 Muhammad Ismail Husain.
276 Muhammad Abdul Wajed
277 Muhammad Momtazuddin.
278 Wafizuddin Ahmad.

Alampur Battala Junior Madrasah.

279 Abdul Latif Khan.
280 Muhammad Abdul Aziz.

Kandulia Karimpur Junior Madrasah.

281 Muhammad Solaiman Talukder.
282 Muhammad Abdul Wased Talukder.
283 Muhammad Abbas Ali Mian.

Brahmanshashan Junior Madrasah.

284 Muhammad Safar Ali.
285 Muhammad Jalaluddin.
286 Mir Abdul Majid.

Gaurangi Junior Madrasah.

287 Shaikh Muhammad Alimuddin.

Karatia Roquea High Madrasah.

288 Muhammad Maqsud Ali.
289 Muhammad Belayet Husain.
290 Muhammad Matiur Rahman.
291 Muhammad Asgar Ali.
292 Muhammad Abdul Mannan.
293 Syed Ahmad Husain.
294 Muhammad Mustafa Ali.
295 Syed Muhammad Abdus Salam.
296 Muhammad Abdullah.

Tangail Junior Madrasah.

297 Muhammad Serajul Haq.

Kawaljani Junior Madrasah.

298 Serajul Haque Khan.
299 Izzat Ali Mian.
300 Reazuddin Miah.
301 Muhammad Mockbul Hussain Mian.
302 Abdul Mazid Khan.
303 Khalilor Rahman Mian.

Barga Junior Madrasah.

304 Muhammad Shadaruddin Miah.
305 Muhammad Reazuddin.
306 Muhammad Jumshor Ali Miah.

Battajore Junior Madrasah.

307 Muhammad Abdul Mannan Miah.
308 Muhammad Bellaluddin.
309 Makbul Hossain Meah.
310 Khandaker Md. Abdul Moula.

Daftiar Junior Madrasah.

311 Belaluddin Ahmad.

Dharerbari Junior Madrasah.

312 Md. Abed Ali Mian.
313 Md. Abdul Kaddus.
314 Nur Muhammad.
315 Md. Amzad Hossain.
316 Md. Siddique Hossain Miah.
317 Md. Abdul Latif Mian.
318 Md. Jalaluddin Miah.
319 Md. Maqbul Hossain.
320 Md. Abdul Awal Miah.

Suti Junior Madrasah.

321 Muhammad Delwar Hossain Talukder.
322 Muhammad Abdus Samad.
323 Muhammad Abdul Halim.
324 Muhammad Shamser Ali.
325 Muhammad Intaz Ali.
326 Muhammad Akbar Hossain.
327 Muhammad Shamsul Islam Miah.

Kuraliapara Junior Madrasah.

328 Mainuddin Miah.

Balla Junior Madrasah.

329 Abdul Ali.
330 Muhammad Mofazzol Hossain Miah.
331 Nayan Khan.
332 Muhammad Waliulla Khan.
333 Abdur Rahim Khan.
334 Muhammad Hasan Miah.

Faridpur District.

Faridpur High Madrasah.

335 Kazi Abul Hashem.
336 Md. Bashiruddin Sikdar.
337 Makbul Hossain Molla.

Charbhadrasan Junior Madrasah.

338 Abdul Rashid Molla.
339 Abdul Kader Khan.

Kamarkhali Junior Madrasah.

340 Khandaker Reazur Rahman.
341 Md. Hassen.

Bilnalya Junior Madrasah.

342 Md. Nazimuddin.

Adampur Junior Madrasah.

343 Abdul Hamid Mian.
344 Majibar Rahman.
345 Abdul Bari Miah.

Ratail Junior Madrasah.

346 Md. Akram Hossain.
347 Md. Alauddin.
348 Md. Abdur Rashid.
349 Md. Nazir Hossain.

Joynagar Junior Madrasah.

350 Waliar Rahman Mian.

Narikelbari Junior Madrasah.

351 Md. Babur Ali.

Kalkini Junior Madrasah.

352 Kazi Abdul Mannan.
353 Abdul Mannan.
354 Mosharraf Hossain.
355 Muhammad Nader Ali.

Madaripur Junior Madrasah.

356 Muhammad Abdul Majid.
357 Muhammad Badruddin.
358 Muhammad Adoluddin Mian.

Rajore Junior Madrasah.

359 Md. Abdul Haque Mian.
360 Md. Helaluddin Miah.
361 Md. Abdur Rahman Miah.
362 Abdur Rashid Miah.
363 Md. Serajuddin.

Charatra Azizia Junior Madrasah.

364 Nur Mahammad Meah.
365 Muhammad Matiar Rahman Sarrar.
366 Muhammad Abdul Jalil Khan.

Charkumuria Junior Madrasah.

367 Muhammad Abdus Shukur Miah.
368 Muhammad Abdul Hashem Munshi.

Nilfa Boira Junior Madrasah.

369 Abdul Halim.

Pakurtia Junior Madrasah.

370 Sakhawat Hossain.

Shakhipur Beparipara Junior Madrasah.

371 Abdur Rashid Miah.
372 Mukshed Ali Malat.
373 Mukshed Ali Bepari.
374 Muhammad Julfaker Molla.
375 Muhammad Azharuddin.
376 Muhammad Bazlur Rahman.
377 Muhammad Shahadat Hossain.
378 Muhammad Nural Islam.

Enayetnagar Junior Madrasah.

379 Md. Motahar Hossain Mian.
380 Md. Syed Ahmad.

Bakarganj District.

Gazirpar Junior Madrasah.

381 Muhammad Eakub Ali.

Alokanda Nuria High.

382 Abdul Karim.
383 Habibur Rahman.

Neamatpur Junior Madrasah.

384 Muhammad Hasan.

Babuganj Junior Madrasah.

385 Muhammad Abdul Aziz.
386 Muhammad Fazlul Haq Molla.

Jolagati Huq Junior Madrasah.

387 Muhammad Abdul Hamid.
388 Muhammad Abdus Sattar.
389 Muhammad Syed Ali.

Charpata High Madrasah.

390 Abul Hashim.

Gournadi Junior Madrasah.

391 Abdul Mannan.
392 Abdul Quader.
393 Muhammad Matiar Rahman.

Akalam Ahmadia Junior Madrasah.

394 Habibar Rahman.

Shibpur Junior Madrasah.

395 Abdul Wazid.
396 Ali Ahmad Mollah.
397 Taib Ali Akon.
398 Tazem Ali Khan.
399 Tazuddin Rari.

Chhota Gourichanna Junior Madrasah.

400 Mafizar Rahman.

Barajalia Sobhania Junior Madrasah.

401 Abdul Ghafur.
402 Ali Amjad.

Bhagairchar Hamidia Junior Madrasah.

403 Muhammad Abul Hashem.
404 Muhammad Ismail.
405 Muhammad Serajal Islam.

Nazirpur Junior Madrasah.

406 Habibur Rahman.

Keundia High Madrasah.

407 Lutfur Rahman.
408 Muhammad Maqsuder Rahman.
409 Muhammad Ashraf Ali.
410 Musammat Khadija Khatun.

Gulishakhali Junior Madrasah.

411 Abdul Hashem.
412 Azizer Rahman.
413 Muhammad Magfer Ali.
414 Sekandar Ali.

Nazirpur Chhotadalima Junior Madrasah.

415 Abdul Hakim, I.
416 Abdul Hakim, II.
417 Abdul Khaleque.

Mamania Junior Madrasah.

418 Muhammad Zobaid Ullah.

Dhamura Junior Madrasah.

419 Zohurul Huq.

Krishnakati Junior Madrasah.

420 Sekandar Ali.

Ulania Junior Madrasah.

421 Arshed Ali.

Kazirchar Junior Madrasah.

422 Syed Abdur Razzaque.
423 Hemayetuddin Ahmad.

Sutiakati Junior Madrasah.

424 Muhammad Abul Kasem.
425 Muhammad Habibur Rahman, II.

Rayapur Latifia Junior Madrasah.

426 Abdul Karim Talukdar.
427 Abdul Quader.
428 Motaharuddin.
429 Taleb Ali Khan.

Durgapur Bajukati Junior Madrasah.

430 Talukder Abdur Razzaque.

Dhowa Rajpasha Junior Madrasah.

431 Howlader Eskander Ali.
432 Howlader Tapsir Ali.
433 Sikder Hatim Ali.

Alkirhat Junior Madrasah.

434 Muhammad Abdul Hashem.
435 Muhammad Kasem Ali.
436 Noor Muhammad.

A. Rub High Madrasah.

437 Muhammad Jobaid Ali.

Chandpur Junior Madrasah.

438 Abdul Aziz.
439 Abdul Ghaffar.
440 Ahmad Ali Faraji.

Chittagong District.

Chittagong Madrasah.

441 Abdus Subhan.
442 Kabir Ahmad.
443 Muhammad Yunus.
444 Shamsul Huda.
445 Zahir Ahmad.

Barakamaldaha Junior Madrasah.

446 Muhammad Abdul Hakim.

Bailchari Junior Madrasah.

447 Ali Ahmad.
448 Faiz Ahmad.
449 Faizur Rahman.
450 Mustafizur Rahman, II.

Daulatpur A. B. C. Junior Madrasah.

451 Abdul Karim Chaudhury.
452 Muhammad Sirajul Islam.
453 Saiyad Muhammad Yaqub.

Kadhurkhil Junior Madrasah.

454 Muhammad Abdur Razzaq.
455 Muhammad Aminul Islam Khan.
456 Muhammad Baktuzzamal.

Maizbhandar Ahmadia Junior Madrasah.

457 Abdul Maabud.

Mariamnagar Junior Madrasah.

458 Badsha Miyan.
459 Nur Ahmad.

Sitakund High Madrasah.

460 Forrokh Ahmad.

South Patenga Junior Madrasah.

461 Abu Zoha Ali Ahmad Bhuiyan.
462 Muhammad Faizul Haq.
463 Muhammad Saleh.

Charkanai Junior Madrasah.

464 Kamaluddin Ahmad.
465 Shafiur Rahman.

Sanua Junior Madrasah.

466 Hafez Ahmad.
467 Obaidul Haq.
468 Saleh Ahmad.

Haildhar Junior Madrasah.

469 Muhammad Amin.
470 Muhammad Naderuzzaman.
471 Muhammad Siddique.
472 Wali Ahmad.
473 Yusuf Ahmad.

Noapara Junior Madrasah.

474 Muhammad Abdullah.
475 Muhammad Abdul Latiff.

Mirzapur Junior Madrasah.

476 Idris Miyan.

Maishamora Junior Madrasah.

477 Muhammad Sirajul Haq.

Chapatali Junior Madrasah.

478 Fazal Ahmad.

Char Khagaria Junior Madrasah.

479 Afzal Ahmad.
480 Kamaluddin Ahmad.
481 Syed Ahmad.

Kaiyarbil Mumin Junior Madrasah.

482 Abu Taher Muhammad Abdul Haq.
483 Kamaluddin Ahmad.
484 Muhammad Habibullah.

Tippera District.

Hussamia High Madrasah.

485 Muhammad Abdul Mannan.
486 Syed Shamsul Abdal.

Mainamati Junior Madrasah.

487 Ahmadullah.
488 Muhammad Ismail.
489 Syed Ali.

Maligaon Ashrafia Junior Madrasah.

490 Adam Ali.
491 Muhammad Abdul Bari.
492 Muhammad Arab Ali.
493 Muhammad Habibur Rahman.
494 Muhammad Sharifuzzaman.
495 Syeduddin Ahmad.

Khoshbash Junior Madrasah.

496 Abdul Matin.

Fultali Junior Madrasah.

497 Abdul Khaliq.
498 Ali Ashraf.

Mahichail Junior Madrasah.

499 Muzaffar Hussain.

Gauripur Akramia Junior Madrasah.

500 Ahmad Ali.
501 Muhammad Habibullah.

Palishara Junior Madrasah.

502 Abu Taher Muhammad Habibur Rahman.
503 Faziluddin Ahmad.
504 Muhammad Shamsuddin.

Muhammadpur Junior Madrasah.

505 Muhammad Abdus Sattar.
506 Muhammad Asmat Ali.
507 Muhammad Jaafar Ali.
508 Muhammad Kafiluddin

Barail Junior Madrasah.

509 Abdur Rahman.

Uttarda Junior Madrasah.

510 Muhammad Ali Akbar.

Hajiganj Junior Madrasah.

511 Habibullah Miyan.

Nimsar Junior Madrasah.

512 Abdul Hakim.

Khalla Junior Madrasah.

513 Abu Muhammad Syeduzzaman.
514 Zahirul Haq Khondkar.

Gopalnagar Junior Madrasah.

515 Muhammad Mohar Ali.
516 Muhammad Serajul Islam.

Ghorasal A. K. Junior Madrasah.

517 Abul Bashr Muhammad Ghulam Samdani.
518 Abdul Hamid.
519 Abdul Hannan Khan.
520 Abdul Qader Khondkar.
521 Abdul Wahed.
522 Abdus Salam.
523 Kitabuddin Ahmad.
524 Mafizuddin Ahmad.
525 Muhammad Hanif.
526 Serajul Islam.

Hingula Hossamia Junior Madrasah.

527 Abdul Majid.

Baddabazar Junior Madrasah.

528 Muhammad Abdul Halim.
529 Muhammad Ashraf Ali.

Jamsherpur Junior Madrasah.

530 Wali Ahmad.

Jamaul Azhar Junior Madrasah.

531 Abdul Aziz.

Kharera Mahmudia Junior Madrasah.

532 Muhammad Fazlul Haq.
533 Muhammad Tajul Islam.
534 Muhammad Wahiduddin.

Elliotganj Junior Madrasah.

535 Abdul Aziz.
536 Abdul Ghani Qazi.
537 Abdul Wadud.
538 Aqamat Ali Majhi.
539 Syed Ali Miyan.

Cheriara Junior Madrasah.

540 Atar Ali Patwari.
541 Muhammad Abdul Matin Majumdar

Kahalthuri Hamidia Junior Madrasah.

542 Muhammad Abul Husain Miyan.

Tezkhali Junior Madrasah.

543 Badiuzzaman.
544 Muhammad Abu Syed.
545 Taheruzzaman.
546 Wares Ali.

Waruk Rahmania Junior Madrasah.

547 Muhammad Abdul Haq, I.
548 Muhammad Abdul Haq, II.
549 Muhammad Abdul Haq, III.
550 Muhammad Abdul Wahed.
551 Muhammad Amir Khan.
552 Shamsul Haq. II.

Meher Shahrasti High Madrasah.

553 Muhammad Yasin.
554 Waizuddin.

Fatehabad Junior Madrasah.

555 Abul Qasem Khan.
556 Momtazuddin.
557 Moslehuddin Ahmad.

Haripur Arafia Junior Madrasah.

558 Ali Ashraf.
559 Khorsed Alam Qazi.
560 Serajul Islam.

Chasai Junior Madrasah.

561 Abdul Ghafur Miyan.

Rasulpur Junior Madrasah.

562 Abdul Wadud Chaudhury.

Burichang Junior Madrasah.

563 Ali Ahmad.
564 Zulfiker Ali.

Narandia Kalimia Junior Madrasah.

565 Muhammad Abdul Bari.
566 Muhammad Sujaat Ali.

Barail Junior Madrasah.

567 Kamaluddin.

Singadda Junior Madrasah.

568 Abdul Karim Pathan.

Nuria High Madrasah.

569 Asmat Ali Miyan.
570 Rustam Ali Khan.

Nasirkot Junior Madrasah.

571 Abdul Ghani Pradhania.
572 Abdul Majid Bakaul.
573 Muhammad Azizur Rahman.
574 Muhammad Hafizuddin Khondakar.

Sholla Junior Madrasah.

575 Abdul Matin.
576 Abdur Rashid.

Naori Junior Madrasah.

577 Muhammad Abdul Manaf.
578 Muhammad Siddiqur Rahman.

Kalirbazar Junior Madrasah.

579 Ahmadullah.
580 Muhammad Loqman.

Ludhua Junior Madrasah.

581 Muhammad Nur Baksh.

Bahari Junior Madrasah.

582 Muhammad Abdul Majid.
583 Muhammad Abdus Samad.
584 Tamizuddin Mondal.

Ekhlaspur Junior Madrasah.

585 Badiul Alam.

Mahamaya Junior Madrasah.

586 Muhammad Abdul Ghani Patwari.
587 Muhammad Aminuddin Bhuiyan.

Naobhanga Jaipur Osmania Junior Madrasah.

588 Muhammad Shamsuddin.
589 Muhammad Tofazzul Husain.

Safarmali Junior Madrasah.

590 Muhammad Abdur Rashid.

Aswinpur Junior Madrasah.

591 Muhammad Ali Akbar.

Rampurbazar Majidia Junior Madrasah.

592 Muhammad Mukhlesur Rahman.
593 Muhammad Rafiqul Husain.

Nandanpur Junior Madrasah.

594 Habibullah.
595 Hasan Ali.

Hoglakandi Junior Madrasah.

596 Gharib Hussain.
597 Idris Ali.
598 Muhammad Bazlur Rahman.

Majidpur Azimia Junior Madrasah.

599 Shamsul Huda.
600 Abdul Aziz.

Ragdail Junior Madrasah.

601 Muhammad Karam Ali.
602 Muhammad Omar Ali.

Noakhali District.

Katghar Junior Madrasah.

603 Abul Kalam Muhammad Shamsul Alam.
604 Muhammad Maqsud Alam.
605 Muhammad Nuruzzaman.

Mutiganj Keramatia Junior Madrasah.

606 Muhammad Ahsanullah Chaudhury.
607 Momtazuddin Ahmad.

Santoshpur Junior Madrasah.

608 Sheikh Abdul Karim.

Chhagalnaiya Junior Madrasah.

609 Abdul Monaf Majumdar.

Khaira Junior Madrasah.

610 Basheer Ahmad.
611 Muhammad Serajul Haq.

Jaipur Rahmania Junior Madrasah.

612 Hashmatullah Bhuiyan.

Nichahara Junior Madrasah.

613 Muhammad Abdur Rab.
614 Muhammad Fazlul Haq.
615 Muhammad Hashmatullah.

Shonapur Junior Madrasah.

616 Bazlur Rahman.
617 Lutful Haidar.
618 Muhammad Sirajul Haq.

Eklaspur Junior Madrasah.

619 Muhammad Abdur Rahman.

Bhatra Junior Madrasah.

620 Abu Bakr Muhammad Mujibul Haq Tafadar.
621 Muhammad Abdul Hamid Majumdar.
622 Muhammad Basheerullah.
623 Muhammad Kamel Bhuiyan.
624 Muhammad Mozammel Haq Majumdar.
625 Muhammad Sirajul Islam Bhuiyan.

Bais-sindur Junior Madrasah.

626 Muhammad Abdul Haq.

Bhimpur Junior Madrasah.

627 Hashmatullah.
628 Nurul Haq.
629 Sakhawatullah.

Senbag Junior Madrasah.

630 Muhammad Syedul Haq.
631 Muhammad Zulfiker.

Rokanpur Junior Madrasah.

632 Bazlur Rahman.

Jibnagar Junior Madrasah.

633 Muhammad Abdul Majid.
634 Muhammad Abdul Wahhab.
635 Muhammad Ali Ahmad.
636 Muhammad Hadayetullah.
637 Muhammad Saadatullah.
638 Muhammad Sirajul Haq.
639 Muhammad Shamsul Haq.

Paipara Junior Madrasah.

640 Muhammad Nurul Haq, II

Rakhalia Junior Madrasah.

641 Muhammad Badiuzzaman.

Keramatganj Junior Madrasah.

642 Abul Bashr Muhammad Asadullah.
643 Abul Khair Muhammad Enayetullah Chaudhury.
644 Abul Faiz Muhammad Khorsed Alam Chaudhury.

Dashpara Junior Madrasah.

645 Ali Ahmad.
646 Muhammad Abdur Rashid.
647 Muhammad Hashmatullah.
648 Muhammad Mahebbullah.
649 Muhammad Shamsul Haq.

Barahinagar Junior Madrasah.

650 Muhammad Abdul Ghani.
651 Muhammad Ali Akbar.
652 Muhammad Habibur Rahman.
653 Muhammad Shafiullah.
654 Muhammad Shamsul Haq.

Khagaria Junior Madrasah.

655 Abdur Rab.
656 Atawal Karim.
657 Siddiqullah.

Lakshmipur High Madrasah.

658 Muhammad Abdul Khaliq.
659 Muhammad Afzal.
660 Muhammad Anwarul Haq.
661 Muzaffar Ahmad Chaudhury.

Badalkot Junior Madrasah.

662 Mahabbatullah.
663 Nazir Ahmad.

Mirpur Junior Madrasah.

664 Mafizur Rahman.
665 Muhammad Basheerullah Patwari.
666 Muhammad Habibullah.
667 Shamsuddin.

Punianagar Junior Madrasah.

668 Abdul Awal.
669 Abdul Ghafur.
670 Noor Muhammad.

Hajirhat A. Rub High Madrasah.

671 Lutfar Rahman.

Bhabanijibanpur Junior Madrasah.

672 Kazi Rahmatullah.
673 Lehajuddin Ahmad Howladar.
674 Muhammad Musharruf Hossain.
675 Muhammad Sharafatullah.
676 Nasir Ahmed.

Narayanpur Junior Madrasah.

677 Muhammad Solaiman.
678 Muhammad Abdul Ghani.
679 Serajul Huq Dewan.
680 Ahmadullah Patwari.

Rajshahi District.

Rajshahi Madrasah.

681 Muhammad Kawsaruddin Ahmad.
682 Salimuddin Ahmad.
683 Rahim Baksh.
684 Muhammad Jasimuddin.

Baneswar N. N. Junior Madrasah.

685 Abul Qasim Muhammad Dalilur Rahman.
686 Shaikh Muhammad Abdul Malik.

Matikata Junior Madrasah.

687 Md. Mujibur Rahman.
688 Md. Abdus Samad.
689 Md. Bilal Husain.

Chak Nazirpur Junior Madrasah.

690 Muhammad Zarifuddin.
691 Muhammad Azmat Ali Mullah.
692 Muhammad Abdul Jalil Mullah.

Bhatsail Junior Madrasah.

693 Md. Ahmad Husain Mondal.
694 Saiful Islam Mondal.
695 Md. Saiyid Ali Mondal.

Nanuj Kalimia Junior Madrasah.

696 Md. Abdul Qadir Sirdar.

Naogaon Co-operative Junior Madrasah.

697 Muhammad Muqbul Hossain.
698 Muhammad Sayeed Ali.
699 Muhammad Nazrul Islam.
700 Muhammad Muqsed Hossain.
701 Muhammad Ayub Ali Mollah.
702 Muhammad Mozzammel Huq.
703 Moyeezuddin Ahmad.
704 Muhammad Reazuddin.
705 Khondoker Muhammad Fazlur Rahman.
706 Muhammad Nabiuddin.
707 Abu Muhammad Anwar Hossain.

Jantigram Junior Madrasah.

708 Md Abdur Rahman Mian.

Malda District

Nama Sankarbati Junior Madrasah.

709 Md. Shamsul Hoque.
710 Md. Moquebul Hosain.
711 Muhammad Abdur Rahman.
712 Shia Muhammad.
713 Muhammad Belaluddin.

Malda Model Junior Madrasah.

714 Abdul Ghani.
715 Muhammad Kamaluddin.

Noya Mauza Subhania Junior Madrasah.

716 Md. Wilayet Ali.

Chak Alampur Junior Madrasah.

717 Muhammad Luqmanul Huq.

Baliadanga Junior Madrasah.

718 Muhammad Mohiuddin.

Hemayet Memorial High Madrasah.

719 Muhammad Abdul Quddus.

Rangpur District.

Khalisha Dhulia Junior Madrasah.

720 Md. Abdur Rahim.
721 Md. Taisiruddin.
722 Md. Ismail.
723 Md. Abdul Zabbar.

Bakshiganj Junior Madrasah.

724 Md. Mozharul Hoque.

Haragach High Madrasah.

725 Muhammad Abdul Halim.
726 Muhammad Abdul Awwal.
727 Muhammad Sayedul Haq.

Rangpur Junior Madrasah.

728 Muhammad Zahuruddin.
729 Abdul Hamid Mian.
730 Muhammad Rahim Baksh.
731 Muhammad Muzaffar Husain.

Jhunagach Chapani Junior Madrasah.

732 Md. Babaruddin.
733 Md. Bashiruddin.
734 Md. Shihabuddin.
735 Md. Tofazzal Hussain.
736 Md. Yaqub Ali.

Dalgram Shamsia Junior Madrasah.

737 Abul Khair Muhammad Ismail.
738 Muhammad Abdul Ghafur.
739 Abul Kalam Muhammad Afsaruddin.
740 Md. Anwaruddin Choudhury.
741 Md. Muzammil Haq.
742 Md. Mujibur Rahman.

Kaliganj Junior Madrasah.

743 Md. Fazlul Karim Mian.
744 Md. Wazir Ali Sarkar.

Phulbari Junior Madrasah.

745 Mumtazuddin.

Ballamjhar Ainul Ulum Junior Madrasah.

746 Md. Abdul Malik.
747 Md. Abdul Mabud Azad.

Rasthpara Junior Madrasah.

748 Md. Abdur Rahman.
749 Md. Mohsin Ali.
750 Abdul Wadud Khondkar.

Rasulpur Junior Madrasah.

751 Md. Ashrafuddin.
752 Md. Harunar Rashid.

Jalalia Junior Madrasah, Mahiganj.

753 Md. Ali Akbar.

Krishnapur Junior Madrasah.

754 Md. Bazlur Rahman.

Gopalpur Hamidia Junior Madrasah.

755 Md. Motiur Rahman.
756 Md. Hifazuddin Akanda.
757 Md. Najibur Rahman Talukdar.
758 Md. Abdus Samad Mondal.

Mahadipur Junior Madrasah.

759 Md. Jamaluddin Mian.

Radhanagar Junior Madrasah.

760 Muhammad Mahtabuddin Sarkar.
761 Muhammad Golam Mortaza Sarkar.
762 Muhammad Mahiruddin.
763 Muhammad Jamaluddin.

Panga Junior Madrasah.

764 Mozzammel Haque.

Kashipur Junior Madrasah.

765 Md. Nurul Islam.

Nageswari Karamatia Junior Madrasah.

766 Md. Sher Ali Mian.

Batikamari Junior Madrasah.

767 Muhammad Nuzulur Rahman Mia.

Fulchhari Junior Madrasah.

768 Md. Mazharuddin Sarkar.

Gunaigachh Junior Madrasah.

769 Md. Abul Quasem.
770 Md. Abdur Rashid.

Chhoygharia Junior Madrasah.

771 Muhammad Abdul Karim, I.
772 Muhammad Hussain Ali.
773 Syed Abdul Khaliq.
774 Muhammad Khadem Ali.
775 Muhammad Ali.

Kuptola Junior Madrasah.

776 Zainul Abdin.
777 Md. Omer Ali Sarkar.
778 Md. Reazuddin.
779 Abdul Jalil Sarkar.

Mahimganj Junior Madrasah.

780 Yasinuddin Ahmad.
781 Muhammad Idris.

Khalisha Belpukur Junior Madrasah

782 Md. Tofail Hossain.

Berakuthi H. I. Junior Madrasah.

783 Baharuddin Ahmad.
784 Md. Jenatullah.

Dinajpur District.

Noorul Majid Junior Madrasah.

785 Md. Mufizuddin.
786 Md. Shahiruddin.

Nurul Huda Junior Madrasah.

787 Aktaruzzaman.

Phulbari G. M. Junior Madrasah.

788 Md. Shahabuddin.
789 Md. Hazeruddin.

Palashbari Junior Madrasah.

790 Shafiuddin Ahmad.
791 Muhammad Mufazzal Hussain Khan.
792 Muhammad Abbas Ali.

Baragram Junior Madrasah.

793 Muhammad Azizuddin.
794 Muhammad Ibrahim.
795 Muhammad Afazuddin.
796 Muhammad Mahtabuddin.

Golapbag Junior Madrasah.

797 Amiruddin Ahmad.
798 Nasiruddin Ahmad.

Farsipara Junior Madrasah.

799 Mahiuddin Khan.
800 Matiur Rahman Choudhury.
801 Md. Abdul Latif Sarkar.
802 Sharifuddin Choudhury.
803 Abdul Aziz Ahmad.
804 Muhammad Hussain.
805 Tanser Ali.
806 Farazuddin Ahmad.
807 Ramjan Ali Choudhury.
808 Nomiruddin Ahmad.

Teghara Matial Islam Junior Madrasah.

809 Shamsuddin Ahmad.

Jagannathpur Junior Madrasah.

810 Md. Ahsanullah Khan.
811 Md. Ghulam Rahman Khan.

Naogaon Junior Madrasah.

812 Muhammad Ahia.
813 Moslem Hoque.

Jagannathpur Junior Madrasah (Dinajpur Sadar).

814 Yeakub Ali Ahmad.
815 Md. Abdul Baqui.

Vaior M. S. Jalal Junior Madrasah.

816 Siddique Ahmad Biswas.

Jalpaiguri District.

Srirampur Amanatia Junior Madrasah.

817 Md. Altaf Husain Prodhan.

Sonapur Ekramia Junior Madrasah.

818 Md. Safiruddin.
819 Muhammad Ali.
820 Md. Ismail Khan.

Putimari Junior Madrasah.

821 Saiyid Azharul Haq.
822 Md. Shihabuddin.
823 Md. Khanuddin.

Chandanbari Jalimia Junior Madrasah.

824 Md. Abdul Aziz.
825 Md. Jasimuddin.
826 Md. Asir Ali.

Mirgarh Junior Madrasah.

827 Md. Rahimuddin.
828 Md. Dabiruddin.

Bogra District.

Hanail Junior Madrasah.

829 Md. Abdul Wahhab.
830 Md. Mobarak Ali Mian.
831 Md. Ibrahim Mian.
832 Md. Talebuddin Mian.

Itakhola Junior Madrasah.

833 Md. Ferazuddin.

Baniapara Junior Madrasah.

834 Muhammad Jalaluddin.
835 Muhammad Abdul Hakim Mian.
836 Shaikh Muhammad Rahimuddin.
837 Muhammad Abdul Hamid Mia.
838 Muhammad Mansoorur Rahman.

Ujgram Junior Madrasah.

839 Muhammad Reazuddin.
840 Abu Sayeed Muhammad Aminur Rahman.

Satshimulia R. Junior Madrasah.

841 Md. Nazir Husain.
842 Md. Osman Ghani.
843 Md. Tamjid Husain.

Shabgram Junior Madrasah.

844 Muhammad Sefatullah.
845 Muhammad Azhar Ali.
846 Muhammad Altaf Husain.
847 Muhammad Azizur Rahman.
848 Muhammad Tasiruddin.
849 Muhammad Yunus Ali.
850 Muhammad Monsefuddin.

Daridaha Junior Madrasah.

851 Abul Faiz Muhammad Keramat Ali.

Baluahat Junior Madrasah.

852 Muhammad Ahsanuddin.
853 Muhammad Aftabuddin.

Tekharibisha Junior Madrasah.

854 Muhammad Meher Ali.
855 Muhammad Mansoorur Rahman.
856 Muhammad Abul Qasim.

Mahicharan Junior Madrasah.

857 Md. Nawsher Ali.
858 Md. Mujibur Rahman.
859 Md. Wahid Ali.

Abhirampur Junior Madrasah.

860 Md. Qabizuddin.
861 Md. Amjad Ali.
862 Md. Haider Ali.

Shibganj Husainia Junior Madrasah.

863 Md. Asmatullah.
864 Muhammad Ali Khondkar.

Murtazapur Junior Madrasah.

865 Md. Meher Ali Faqir.
866 Abul Khair Muhammad Sulaiman Ali Khondkar.
867 Md. Abul Fazl Dewan.

Nengapirhat S. A. Junior Madrasah.

868 Md. Khazimuddin Sonar.
869 Md. Khafir Ali Mondal.
870 Ahmad Hussin Miyan.

Karnibari Junior Madrasah.

871 Md. Ishaquddin.
872 Md. Ghulam Sultan.

Domanpukur Junior Madrasah.

873 Khondkar Muhammad Mumtazur Rahman
874 Muhammad Kalimuddin.

Baiguni Junior Madrasah.

875 Md. Jasimuddin.

Dhapsultanganj Junior Madrasah.

876 Ayazuddin Ahmad.

Jaguli Junior Madrasah.

877 Md. Nasimuddin.
878 Md. Tasudduq Hossin Khan.

Chandanbaisha Junior Madrasah.

879 Md. Osman Ghani.
880 Md. Khadem Hossain.
881 Md. Efazuddin.

Shicharpara Buljan Junior Madrasah.

882 Md. Saberuddin.

Huakua Junior Madrasah.

883 Md. Rahmatullah.
884 Md. Kamaluddin.
885 Md. Raisuddin Mian.

Mahasthan Junior Madrasah.

886 Muhammad Easin.

Panchgram Junior Madrasah.

887 Tasiruddin Ahmad.

Damgara Junior Madrasah.

888 Muhammad Sulaiman Ali Mian.
889 Muhammad Afsar Ali Khondokar.
890 Muhammad Keramat Ali.

Pabna District.

Beara Nur Nabi Junior Madrasah.

891 Md. Jobed Ali.
892 Md. Ismail Hossain.

I. I. College Serajganj.

893 Muhammad Husain.
894 Muhammad Shamsul Haq.
895 Muhammad Abul Hussain, I.
896 Muhammad Khurshed Ali.

Ullapara Junior Madrasah.

897 Md. Taibur Rahman.
898 Md. Abbas Ali.
899 Md. Momtaz Ali.
900 Md. Abdus Sattar.

Chinadhukuria Junior Madrasah.

901 Md. Tafizuddin.

Enayetpur Junior Madrasah.

902 Md. Rafizuddin Munshi.

Barahar Islamia Junior Madrasah.

903 Md. Abdul Quddus.
904 Md. Rawshan Ali Mir.

Sambhudia Junior Madrasha.

905 Muhammad Shujaat Husain.

Tamai Junior Madrasah.

906 Muhammad Abu Bakr.
907 Muhammad Wajid Ali.
908 Muhammad Baharul Islam.
909 Muhammad Sikandar Ali.
910 Muhammad Abul Qasim.

Nakalia Islamia Junior Madrasah.

911 Md. Abdud Dian.

Talimnagar Junior Madrasah.

912 Md. Yasin Ali Khan.
913 Md. Abdul Karim Khan.

Cooch Behar.

Daribash Junior Madrasah.

914 Khondkar Md. Nurul Haq.
915 Md. Mahiruddin Mian.
916 Md. Mufizuddin Mian.
917 Md. Mumtazuddin.

Private candidates.

FIRST DIVISION.

Calcutta Centre.

1 Nurunnesa Begum.
2 Muhammad Din.
3 Gholam Nabi.

Murshidabad Centre.

4 Muhammad Joynal Abedin.

Jessore Centre.

5 Muhammad Abdul Quddus.

Khulna Centre.

6 Muhammad Ishaq.
7 Muhammad Hossain Ali.

Mymensingh Centre.

8 Muhammad Hassen Ali.
9 Muhammad Ali Newaz Miah.
10 Muhammad Hussain.
11 Muhammad Khurshiduddin.
12 Muhammad Ismail.
13 Muhammad Shamsuddin.
14 Muhammad Ubaidullah.
15 Muhammad Abdul Hamid.
16 Zalaluddin Ahmad.
17 Muhammad Naimuddin.
18 Muhammad Mafizuddin.
19 Muhammad Ainuddin.
20 Muhammad Matior Rahman.

Karatia Centre.

21 Md. Eshaque Ali Mean.
22 Muhammad Abdul Basir Mian.

Madaripur Centre.

23 Muhammad Jonab Ali Khan.

Barisal Centre.

24 Sekandar Ali.

Sutiakali Centre.

25 Halima Khatun.

Comilla Centre.

26 Musammat Sanwar Khatun.

Chandpur Centre.

27 Muhammad Abdul Wahed.

Noakhali Centre.

28 Abdul Hakim.
29 Muhammadullah.
30 Mujibul Haq.
31 Muhammad Tahirul Islam.

Rajshahi Centre.

32 Muhammad Habibur Rahman Pramanik.
33 Muhammad Raisuddin Mian.
34 Muhammad Abdur Rahman Mian.
35 Md. Naimuddin Sirdar.
36 Kazi Abdul Jobber.
37 Md. Abul Quasem.

Rangpur Centre.

38 Abu Nasar Md. Hesar Uddin Sarkar.
39 Md. Mujibur Rahman.
40 Menhajuddin Ahmad.
41 Md. Abdul Ghafur.
42 Md. Abul Mahsen.
43 Abul Khoyer Muhammad Abdullah Muhammad.
44 Abul Basher Md. Ebrahim.
45 Abul Hasan Md. Ayub Ali Khondokar.

Serajganj Centre.

Candidate from Dacca Division.

46 Muhammad Abdul Kader.

Candidates from Rajshahi Division.

47 Muhammad Ali Khan.
48 Saiyid Muhammad Abdul Ghani.

Dinajpur Centre.

49 Muhammad Abdur Rahman Mian.

SECOND DIVISION.

Calcutta Centre.

1 Kasiman Nessa Bibi.

Murshidabad Centre.

2 Muhammad Habibar Rahman.
3 Nakibuddin Ahmad.

Jessore Centre.

4 Munshi Abdul Muttaleb.

Khulna Centre.

5 Tasiruddin Ahmad.

Mymensingh Centre.

6 Muhammad Syed Ali.
7 Muhammad Abdus Sattar.
8 Muhammad Abdul Goffur.
9 Muhammad Abdul Jalil.
10 Muhammad Mujaffar Ali.
11 Muhammad Sirajuddin
12 Khandaker Abdul Jabber.
13 Muhammad Nasiruddin.
14 Muhammad Asgar Ali.
15 Muhammad Ali.
16 Muhammad Junab Ali.
17 Muhammad Arifuddin.
18 Muhammad Jubod Ali Akanda.

Kanaid Centre.

19 Muhammad Abdus Salam.
20 Muhammad Mafiez Ali Khan.
21 Muhammad Noyesuddin.
22 Muhammad Abdun Noor.
23 Dewan Abdul Hai.
24 Md. Chand Mahmud Mean.
25 Abdus Samad Bhuinya.
26 Muhammad Altaf Hossain Mian.
27 Md. Wazed Ali Miah.
28 Md. Bahadur Ali Khan.
29 Md. Abu Bakar Miah.

Serajganj Centre.

Candidates from Dacca Division.

30 Muhammad Saiduddin.
31 Muhammad Mofuser Rahman Talukder.
32 Rowshan Ali Miah.
33 Muhammad Abdur Rahim Miah.
34 Muhammad Kudrat Ali.

Barisal Centre.

35 Muhammad Delwar Hossain.

Comilla Centre.

36 Tafazzul Ahmad.
37 Muhammad Abdul Ghani.
38 Sultan Ahmad.

Noakhali Centre.

39 Kazi Abdur Rub.
40 Kazi Jamalur Rahman.
41 Nurun Nabi Chaudhury.
42 Syedur Rahman.
43 Obaidullah.

Rajshahi Centre.

44 Md. Amiruddin Pramanik.
45 Md. Ershad Ali Mian.
46 Md. Mohsen Ali.
47 Md. Solaiman Khan.

Rangpur Centre.

48 Abul Fatha Md. Zamir Uddin Mian.
49 Abul Khayer Md. Abdul Jobber Mian.
50 Md. Kobiruddin.
51 Md. Abul Hosen Mondal.
52 Abul Monsur Md. Omar Ali.
53 Abu Syed Md. Moqbul Hosain.
54 Abul Olah Muhammad Fayezuddin.
55 Shah Muhammad Abdul Jalil.
56 Syed Majidal Haque.

Bogra Centre.

57 Md. Mozzammel Haque.
58 Khandakar Akkas Ali.
59 Muhammad Mohsen Ally Khan.
60 Md. Mazaharuddin.
61 Md. Sahebuddin.

Dinajpur Centre.

62 Md. Abdur Rahman.

Serajganj Centre.

Candidate from Rajshahi Division.

63 Muhammad Abdus Salam Khan.
64 Muhammad Maqbul Hossain.

J. M. BOTTOMLEY,
Director of Public Instruction Bengal.

Presidency and Burdwan Divisions.

Calcutta, the 12th January 1935.

RESULTS OF THE GIRLS' PRIMARY FINAL SCHOLARSHIP EXAMINATION, 1934.

The undermentioned candidates are awarded Primary Final Scholarships of Rs. 3 a month each, tenable for two years, with effect from the 1st January 1935 :—

Serial No.	Name of candidate.	School from which the candidate appeared.	School at which the scholarship is made tenable.
		PRESIDENCY DIVISION.	
		(Reserved Scholarship for Moslem girls.)	
1	Khodeja Khatun	.. Momen Girls' Muktab, Jessore	.. Madhusudan-Taraprasanna Girls' High School, Jessore.
		(Open scholarships.)	
		24-Parganas.	
1	Subarnalata Devi	.. Baranagore Neogipara Girls' School, 24-Parganas.	(Provided she joins a recognised middle or high school for girls.)
		Jessore.	
1	Hemlota Devi	.. Demokhali Girls' School, Jessore	.. (Provided she joins a recognised middle or high school for girls.)
		Khulna.	
1	Nilimarani Kanjilal	.. Doulatpur Girls' School	.. Coronation Girls' High School, Khulna.
2	Sudharani Devi	.. Senhati Girls' School	.. Senhati Girls' School.
		Nadia.	
	Santi Bagchi	.. Santipur Primary Girls' School	.. (Provided she joins a recognised middle or high school for girls.)
2	Sudharani Ghose	.. Kumarkhali Girls' School	.. Binapani Pardah High School, Calcutta.
		Murshidabad.	
1	Anima Devi	.. Azimganj Girls' School	.. Berhampore Girls' High School.
		BURDWAN DIVISION.	
		(Reserved Scholarship for Moslem girls.)	
1	Ambia Khatun	.. Bankra Badamtala Girls' Muktab	.. (Provided she joins a recognised middle or high school for girls.)
		(Open scholarships.)	
		Howrah.	
1	Kamalasati Chatterjee	.. Samta Girls' School	.. (Provided she joins a recognised middle or high school for girls.)
		Bankura.	
1	Mohitabala Das	.. Wesleyan Mission Boarding School, Bankura.	Lalbazar Mission Girls' M. E. School, Bankura.
		Midnapore.	
1	Chhayarani Debi	.. Ghatal Girls' School	.. (Provided she joins a recognised middle or high school for girls.)
2	Hironbala Das	.. Kanaidighi Girls' School	.. Contai Brahmo Girls' School.
		Hooghly.	
1	Santimoyee Mukherjee	.. Raike's Memorial Girls' School, Hooghly.	(Provided she joins a recognised middle or high school for girls.)
		Burdwan.	
1	Joylakshmi Das	.. Paraj Hindu Girls' School	.. (Provided she joins a recognised middle or high school for girls.)
		Birbhum.	
1	Amena Khatun	.. Kanachi Girls' Muktab	.. (Provided she joins a recognised middle or high school for girls.)

S. B. GUPTA,

Inspectress of Schools, Presidency and Burdwan Divisions (offg.).

Presidency and Burdwan Divisions.

Calcutta, the 12th January 1935.

CALCUTTA GIRLS' SCHOLARSHIP EXAMINATION, 1934.

List of candidates elected to the prizes in Class II.

(Each prize is of the value of Rs. 15 to be paid in three equal instalments in April, August and December 1935.)

Roll No.	Name of candidate.	Name of school from which the candidate appeared.
	(Reserved prizes for Moslem girls.)	
16	*Sabera Khatun	.. K. A. B. Suhrawardy Begum Memorial Moslem Girls' School.
17	Zainab Bibi	.. Ditto.
	(Open prizes.)	
1	Bijali Tewari	.. Diocesan Mission M. E. School.
10	Anima Sen Gupta	.. C. of S. Mission Duff School.
11	Anima Mitter	.. Ditto.
24	Fizza	.. Sakhawat Memorial Girls' High School.
26	Renuka Choudhury	.. C. of S. Mission Boarding School, Cossipore.
27	Indira Mullick	.. Ditto.
39	Latika Sundari Dutt	.. C. E. Z. Mission Chorebagan Girls' School.
47	Zaibunnessa	.. Practising School attached to the Moslem Female Training School.
49	Katyayani Devi	.. Kanailal Dhur's Free Girls' School.
53	Malati Bhattacharyya	.. C. of S. Mission Baghbazar Girls' School.
54	Binapani Ghose	.. Ditto.
55	Shobhabati Ghose	.. C. of S. Mission Garpar Girls' School.
56	Purnima Moyee Mitra	.. Ditto.
57	Rama Das Gupta	.. C. of S. Mission St. Andrew's Girls' School.
58	Anima Sundari Chatterji	.. Ditto.
59	Juthica Halder	.. C. of S. Mission Nimtala Girls' School.
60	Sabitri Sen	.. Ditto.
67	Gita Banerjee	.. Corporation Free Primary School at 57-58, Beniatola Lane.

List of candidates elected to the prizes in Class III.

(Each prize is of the value of Rs. 18 to be paid in three equal instalments in April, August and December 1935.)

	(Reserved prize for Moslem girls.)	
16	Quamrunnessa Bibi	.. K. A. B. Suhrawardy Begum Memorial Moslem Girls' School.
	(Open prizes.)	
1	Kanan Biswas	.. Diocesan Mission M. E. School.
3	Jayanti Dass	.. Ramjoy Seal Shishu Pathsala.
20	Sephalika Roy	.. St. Margaret's High School.
21	Binapani Nandy	.. Ditto.
26	Anita Choudhuri	.. C. of S. Mission Boarding School, Cossipore.
33	Annapurna Dhara	.. C. E. Z. Mission Darzipara Girls' School.
48	Abhabati Ghose	.. C. of S. Mission Garpar Girls' School.
49	Renukona Ganguli	.. C. of S. Mission St. Andrew's Girls' School.
59	Bishnu Priya Goswami	.. Raj Rajeswari Model Girls' School.

List of candidates elected to the prizes in Class IV.

(Each prize is of the value of Rs. 20 to be paid in three equal instalments in April, August and December 1935.)

	(Reserved prize for Moslem girls.)	
15	Akhter Jahan	.. K. A. B. Suhrawardy Begum Memorial Moslem Girls' School.
	(Open prizes.)	
3	Chinta Das	.. Ramjoy Seal Shishu Pathsala.
19	Rama Banerjee	.. St. Margaret's High School.
20	Basanti Devi	.. Ditto.
21	Anima Ghose	.. Kailashchandra Hindu Girls' School.
34	Rezia Sultana	.. Practising School attached to the Moslem Female Training School.
39	Usharani Mitter	.. C. of S. Mission Baghbazar Girls' School.
54	Santi Mukherjee	.. Corporation Free Primary School at 43, Beniatola Lane.

List of candidates elected to the prizes in Class V.

(Each prize is of the value of Rs. 28 to be paid in April 1935.)

	(Reserved prize for Moslem girls.)	
16	Sara Bibi	.. K. A. B. Suhrawardy Begum Memorial Moslem Girls' School.
	(Open prizes.)	
1	Charu Sangma	.. Diocesan Mission M. E. School.
25	Pritikona Ghose	.. C. of S. Mission Boarding School, Cossipore.

List of candidates elected to the prizes in Class VI.

(Each prize is of the value of Rs. 28 to be paid in April 1935.)

	(Open prizes.)	
3	Sephalika Deb	.. C. of S. Mission Duff School.
6	Probhabati Dutt	.. Shyambazar Balika Vidyalaya.

*Sabera Khatun of K. A. B. Suhrawardy Begum Memorial Moslem Girls' School who stood first amongst the successful candidates of Class II will be awarded the "Kailashchandra Medal," 1934.

S. B. GUPTA,

Inspectress of Schools, Presidency and Burdwan Divisions (offg.).

Results of the Government of Bengal, Education Department Annual Training Examination, Second Year Class, Dow Hill Training College, Kurseong, held in November 1934.

Calcutta, the 12th January 1935.

Order of merit.	Name.	Class.	Distinction, if any.
1	Miss R. Bowden ..	I D.	(1) Methods of Teaching School Subjects. (2) Principles of education. (3) Preparation of Lesson Notes. (4) Blackboard Drawing.
2	Miss M. Magry ..	II D.	(1) Practical Teaching. (2) Blackboard Drawing.
3	Miss E. Payne ..	II D.	(1) Principles of education.
4	Miss S. Wallace ..	II D.	(1) Practical Teaching.
5	Miss L. Potts ..	II D.	(1) Preparation of Lesson Notes.
6	Miss M. Melling ..	II	
7	Miss P. Geeran ..	II	
8	Miss A. Mulroney ..	II D.	(1) Blackboard Drawing.
9	Miss P. D'Cruz ..	II	

Note.—D. = Distinction 80 per cent. and over.

R. WOLFENDEN,
Inspector of European Schools, Bengal.

Presidency and Burdwan Divisions.

Calcutta, the 12th January 1935.

RESULTS OF THE GIRLS' PRIMARY PRELIMINARY SCHOLARSHIP EXAMINATION, 1934.

The undermentioned candidates are awarded Primary Preliminary Scholarships of Rs. 2 a month each, tenable for two years, with effect from the 1st January 1935 :—

Serial No.	Name of candidate.	School from which the candidate appeared.	School at which the scholarship is made tenable.
		PRESIDENCY DIVISION.	
		(Reserved Scholarships for Moslem girls.)	
1	Forhatunnesaa ..	Jafarpur Girls' Muktab, 24-Parganas	Katia Girls' U. P. School, 24-Parganas
2	Masirunnesaa Bibi ..	Sundirhat Girls' Muktab, 24-Parganas	Panapukur U. P. School, 24-Parganas
		(Open scholarships.)	
		24-Parganas.	
1	Indira Ghose ..	Basirhat Girls' School ..	Basirhat Girls' School.
2	Hiranmoyee Debi ..	Thakurpukur Girls' School ..	Thakurpukur Girls' School.
3	Shephalika Kar ..	Bhabla Girls' School ..	Bhabla Girls' School.
		Jessore.	
1	Parul Das Gupta ..	Gangarampur Girls' School ..	Gangarampur Girls' School.
2	Halima Khatun ..	Bongaon Girls' School ..	Bongaon Girls' School.
3	Jahanara Khatun ..	Momen Girls' Muktab, Jessore ..	Momen Girls' Muktab, Jessore.
4	Roosenara ..	Andulia Girls' Muktab. ..	Andulia Girls' Muktab.
		Khulna.	
1	Asia Khatun ..	Raghunathpur Girls' School ..	Bagerhat Girls' School.
2	Shovarani Chakraborty ..	Chandani Mohal Mohamaya Girls' School.	Chandani Mohal Mohamaya Girls' School.
3	Santirani Roy ..	Daulatpur Girls' School ..	Daulatpur Girls' School.
4	Bindubasini Chatterji ..	Kartiedia Girls' School ..	Kodbla Girls' School.

Serial No.	Name of candidate	School from which the candidate appeared.	School at which the scholarship is made tenable.
		Nadia.	
1	Purnima Bhadra	.. Chandsarak Chakrapara C. E. Z. Mission Girls' School.	Chandsarak Chakrapara C. E. Z. Mission Girls' School.
2	Renuka Bagchi	.. Chapra Girls' School	.. Pabna Girls' School.
3	Mohamaya Debi	.. Charulata Girls' School, Kustia	.. Charulata Girls' School, Kustia.
4	Sobita Biswas	.. Ranaghat Brojabala Girls' School	.. Ranaghat Brojabala Girls' School.
		Murshidabad.	
1	Gargi Roy Choudhury	.. Berhampore Mohakali Pathsala	.. Berhampore Mohakali Pathsala.
2	Jahanara Khatun	.. Durlavpore Peasant Girls' School	.. Durlavpore Peasant Girls' School.
3	Khatimannesa	.. Madedumuria Peasant Girls' School	.. Madedumuria Peasant Girls' School.
4	Sandhya Rani Saha	.. Bhagirathpur Girls' School	.. Bhagirathpur Girls' School.
		BURDWAN DIVISION.	
		(Reserved Scholarships for Moslem girls.)	
1	Shamsunnehar	.. Padambasan Girls' Muktab, Midnapore.	Tamluk M. E. Girls' School, Midnapore.
2	Sofia Begum	.. Ditto	.. Provided she joins a U. P., middle or high school.
		(Open scholarships.)	
		Howrah.	
1	Minatirani Banerji	.. Chandbhag Girls' School	.. Mugkalyan Girls' School.
2	Marzina Khatun	.. Sankrail Girls' Muktab.	.. Sankrail Junior Madrasa.
3	Abeda Khatun	.. Munshidanga Girls' Muktab	.. Bankra Badamtola Girls' Muktab.
		Bankura.	
1	Jogmaya Debi	.. Indpur Girls' School	.. Indpur M. E. School.
2	Kamala Sundari Ghosh	.. Gargaria Girls' School	.. Gargaria M. E. School.
3	Subhasinibala Dasi	.. Rajgram Girls' School	.. Kalitola M. E. Girls' School, Bankura.
		Midnapore.	
1	Asharani Ghosh	.. Burge Memorial Girls' School	.. Burge Memorial Girls' School.
2	Ayesha Khatun	.. Suhrawardy Begum Girls' School	.. Suhrawardy Begum Girls' School.
3	Tilatama Payra	.. Bishnupur Board Girls' School	.. Bishnupur Board Girls' School.
4	Bijanbala Das	.. Kanaidighi Girls' School	.. Kanaidighi Girls' School.
		Hooghly.	
1	Karunamoyee Devi	.. Tirthabashi Girls' School, Haripal	.. Haripal Tithabashi Girls' School.
2	Lajjabati Nandi	.. Jamgram Girls' School	.. Jamgram Girls' School.
3	Gayatri Adhikari	.. Burosubtala Girls' Mission School	.. Kamarpara Mission Girls' School.
		Burdwan.	
1	Radharani Devi	.. Khudrun Girls' School	.. Mathrun H. E. School.
2	Lilabati Dasi	.. Kaichar Girls' School	.. Kaichar Girls' School.
3	Shamsunnessa	.. Paraj Girls' Muktab	.. Paraj Girls' Muktab.
		Birbhum.	
1	Azimunnessa Khatun	.. Pajuri Girls' Muktab	.. Provided she joins a recognised U. P. or middle school.
2	Rowsone Akhtar	.. Joykrishnapur Girls' Muktab	.. Joykrishnapur Girls' School.
3	Nilima Rani Devi	.. Fatehpur Girls' School.	.. Fatehpur U. P. School.

S. B. GUPTA,

Inspectress of Schools, Presidency and Burdwan Divisions (offg.).

Presidency and Burdwan Divisions.

Calcutta, the 12th January 1935.

RESULTS OF THE GIRLS' SPECIAL MIDDLE SCHOLARSHIP EXAMINATION, 1934.

The undermentioned girls are awarded Middle English Scholarships of Rs. 5 a month each, tenable for four years, with effect from the 1st January 1935 :—

Serial No.	Name of candidate.	School from which the candidate appeared.	School at which the scholarship is made tenable.
		Presidency Division.	
1	Sarama Sundari Mandal	.. C. E. Z. Queen's M. E. School, Krishnagar (Nadia).	Christ Church High School, Dum Dum.
	Bela Das Gupta	.. Peary Sankar Girls' School, Kalia (Jessore).	Brahmo Girls' High School, Calcutta.
		Burdwan Division.	
1	Amiya Ghose	.. Baniban Girls' M. E. School, Howrah	Girls' High School, Giridih.
2	Protima Roy	.. Suri R. T. Girls' School, Birbhum ..	(Provided she joins a recognised high school for girls.)

S. B. GUPTA,

Inspectress of Schools, Presidency and Burdwan Divisions (offg.).

Presidency and Burdwan Divisions.

Calcutta, the 12th January 1935.

RESULTS OF THE GIRLS' SPECIAL MIDDLE SCHOLARSHIP EXAMINATION, 1934.

The undermentioned girls are awarded Middle Vernacular Scholarships of Rs. 4 a month each, tenable for two years, with effect from the 1st January 1935 :—

Serial No.	Name of candidate.	School from which the candidate appeared.	School at which the scholarship is made tenable.
		Presidency Division.	
1	Alomoni Naru	.. L. M. S. Kaorapukur M. V. Girls' School, 24-Parganas.	(Provided she joins an M. E. or H. E. school for girls.)
2	Nilima Sundari Biswas	.. C. E. Z. Queen's M. E. School, Krishnagar (Nadia).	Christ Church High School, Dum Dum.
3	Lilabati Nath	.. Coronation Girls' High School, Khulna	Coronation Girls' High School, Khulna.
4	Gouri Arnab	.. R. K. Mission Sarada Mandir Girls' School, Sarisha (24-Parganas).	R. K. Mission Sarada Mandir Girls' School, Sarisha (24-Parganas).
		Burdwan Division.	
1	Binapani Debi	.. Ramkrishna Mahila Kalyan Girls' School, Asansol (Burdwan).	Beltala Girls' High School, Calcutta.
2	Binapani Chakravertty	.. Sabitri Balika Vidyalaya, Salkea (Howrah).	Howrah Girls' High School.
3	Lilabati Dasi	.. Balika Bani Mandir, Chinsura (Hooghly).	Krishna Bhabini Nari Siksha Mandir, Chandernagore (Hooghly).
4	Tarangini Pandit	.. Ushagram Girls' School, Asansol (Burdwan).	Ushagram Girls' School, Asansol (Burdwan).

S. B. GUPTA,

Inspectress of Schools, Presidency and Burdwan Divisions (offg.).

Rajshahi Division.

Jalpaiguri, the 11th January 1935.

List of candidates who have been awarded Primary Final Scholarships on the results of the Primary (Maktab) Final Examination, 1934.

(Each scholarship is of the value of Rs. 3 a month and is tenable for two years from 1st January 1935.)

Serial No.	Name of scholar.	Name of school from which the scholar appeared at the examination.	Name of school at which the scholarship will be tenable.
	Forty-two Open Primary Final Scholarships and eight reserved for Muhammadans.		
	RAJSHAHI DISTRICT.		
	(Open.)		
	Sadar.		
1	Abdur Rajjak ..	Sonaikandi Board Primary ..	Lokenath H. E. School (Rajshahi).
2	Md. Afsar Ali Sarkar ..	Moshkatadighi Maktab ..	Rajshahi Collegiate School (Rajshahi).
	Nator.		
3	Brojo Lal Sen ..	Nazirpur Board Primary ..	Lohajang H. E. School (Dacca).
4	Anil Krishna Datta ..	Deorpara Board Primary ..	Joari M. E. School (Rajshahi).
	Naogaon.		
5	Khabiruddin Pramanik ..	Sheshoil Maktab ..	Navagram M. E. School (Rajshahi).
6	Hemendra Lal Choudhury ..	Forhadpur Board Primary ..	Mainam M. E. School (Rajshahi).
	Reserved for Muhammadans.		
7	Md. Basaratulla ..	Dodangi Maktab ..	Neamatpur Junior Madrasah (Rajshahi).
8	Fahimuddin (Transferred from Darjeeling).	Pirijpur Board Primary ..	Godagari M. E. School (Malda).
	DINAJPUR DISTRICT.		
	(Open.)		
	Sadar.		
9	Emtazali Biswas ..	Namunia Maktab ..	Churaman M. E. School (Dinajpur).
10	Tafazzal Hossain Khan ..	Boalder Maktab ..	Dinajpur Zilla School.
11	Saber Muhammad ..	Haripur Maktab ..	Sihole M. E. School (Dinajpur).
	Thakurgaon.		
12	Musammat Jamila Khatoon ..	Mirdangi Board Primary ..	Dinajpur Girls' H. E. School.
13	Md. Tezaruddin ..	Sitlai Maktab ..	Thakurgaon H. E. School (Dinajpur).
14	Nazibar Rahman ..	Doulatpur Board Primary ..	Setabganj M. E. School (Dinajpur).
	Balurghat.		
15	Md. Abdul Jabbar Mia ..	Harigram Maktab ..	Palashbari Junior Madrasah (Dinajpur).
	Reserved for Muhammadans.		
16	Idris Molla ..	Ausha Maktab ..	Gangarampur M. E. School (Dinajpur)
	JALPAIGURI DISTRICT.		
	(Open.)		
	Sadar.		
17	Nicholas Kandulna ..	St. Mary Free Primary ..	Dinajpur M. E. School (Dinajpur).
18	Arun Kumar Banerjee ..	Indrajmal Free Primary ..	Ananda Model M. E. School (Jalpaiguri).
	Alipur Duar.		
19	Kashi Nath Das ..	Topsikhata Free Primary ..	Alipur Duar H. E. School (Jalpaiguri).
	Reserved for Muhammadans.		
20	Belayetali Ahmed ..	Matiarpar Free Primary ..	Sakowa M. E. School (Jalpaiguri).
	RANGPUR DISTRICT.		
	(Open.)		
	Sadar.		
21	Md. Abdur Rahman ..	Kismat Habu Maktab ..	Gazaghanta M. E. School (Rangpur.)
22	Shamsuddin Miah ..	Mohodipur Board Primary ..	Pirgachha H. E. School (Rangpur).
23	Md. Sayador Rahman ..	Kismat Habu Maktab ..	Gazaghanta M. E. School (Rangpur).
	Kurigram.		
24	Md. Afazuddin ..	Bowshmari Maktab ..	Nageswari Junior Madrasah (Rangpur).
25	Nanda Kumar Mohanta ..	Bamnachora Board Primary ..	Ulipur H. E. School (Rangpur).

Serial No.	Name of scholar.	Name of school from which the scholar appeared at the examination.	Name of school at which the scholarship will be tenable.
		Gaibandha.	
26	Krishna Lal Sarkar	Sicha Board Primary	Rasulpur M. E. School (Rangpur).
27	Mufizul Hoque	Ditto	Dharmapur M. E. School (Rangpur).
		Nilphamari.	
28	Musammat Hosina Khatoon	Chhatnai Islamia Maktab	Nilphamari Girls' M. E. School (Rangpur).
29	Md. Zobanuddin	Singorgari Maktab	Khalisha Dhulia Junior Madrasah (Rangpur).
		Reserved for Muhammadans.	
30	Md. Nazirul Islam	Chaura Board Primary	Khalisha Belpukur Junior Madrasah (Rangpur).
		BOGRA DISTRICT.	
		(Open.)	
31	Safiuddin Ahmed	Shihali Board Free Primary	Shihali M. E. School (Bogra).
32	Sham Pada Sen	Katnor Primary	Bogra Zilla School.
33	Dhirendra Kumar Shaha	Matidali Board Free Primary	Bogra Municipal M. E. School.
34	Kamakshya Charan Shaha	Sherpur Municipal Free Primary	Sherpur H. E. School (Bogra).
		Reserved for Muhammadans.	
35	Md. Azizar Rahman Sarkar	Karamja Board Primary	Sonatala H. E. School (Bogra).
		PABNA DISTRICT.	
		(Open.)	
		Sadar.	
36	Md. Serajul Haque	Khayersuti Maktab	Dogachi M. E. School (Pabna).
37	Md. Azimuddin	Koladi Maktab	Ditto.
38	Radhaballav Sarkar	Kuchlia Primary	Banwarinagar H. E. School (Pabna).
		Serajganj.	
39	Shajahan Siddique	Ekdala Primary	Serajganj B. L. H. E. School (Pabna).
40	Bhupendra Nath Pal	Rupnai Primary	Serajganj Jnanadayini M. E. School (Pabna).
41	Md. Delwar Ali	Ghati Subgacha Primary	Gandhail M. E. School (Pabna).
42	Md. Mufazzal Hossain	Ditto	Ditto.
		Reserved for Muhammadans.	
43	Md. Mansur Ali	Ghati Subgacha Primary	Gandhail M. E. School (Pabna).
		MALDA DISTRICT.	
		(Open.)	
44	Muhammad Hossain	Debinagar Primary No. II	Sankarbati M. E. School (Malda).
45	Madan Mohan Sarkar	Daulatpur Primary	Bhingole M. E. School (Malda).
46	Shaikh Arshad Ali	Ditto	Harishchandrapur M. E. School (Malda).
		Reserved for Muhammadans.	
47	Mohiuddin	Debinagar Primary No. II	Sankarbati M. E. School (Malda).
		DARJEELING DISTRICT.	
		(Open.)	
48	Bheomal Lall Kakani	Tindharia B. M. U. P. School	Kurseong Boys' M. E. School (Darjeeling).
49	Afzal Hussain Ahmed	Siliguri Town U. P. School	Siliguri H. E. School (Darjeeling).
50	Mantoki Rai	11th Mile U. P. School	Kalimpong H. E. School (Darjeeling).

Thirteen Primary Final Scholarships reserved for backward and depressed classes.

1	Sarat Kumar Haldar	Santahar Primary School	Santahar H. E. School (Bogra).
2	Gour Chandra Mahato	Khetor Road U. P. School	Lokenath H. E. School (Rajshahi.)
3	Trailakya Nath Sen	Kagail Primary School	Kagail H. E. School (Bogra).
4	Sachindra Nath Mandal	Dashmari Board Primary	Rajshahi Collegiate School (Rajshahi).
5	Sudhir Chandra Roy	Karamja Board Primary	Sukhanpukur H. E. School (Bogra).
6	Sitanath Barman	Khaturia Primary	Domar H. E. School (Rangpur).
7	Bejoy Krishna Mohanta	Gopaljhora Primary	Shoulmari M. E. School (Rangpur).
8	Munshi Choure	Khoribari Primary	Narayanpur M. E. School (Dinajpur).
9	Satish Chandra Mandal	Isabpur Primary	Balurghat H. E. School (Dinajpur).
10	Nagendra Nath Mahato	Jhikra Bandar Primary	Ullapara H. E. School (Pabna).
11	Mangal Minj	St. Mary Free Primary	Dinajpur M. E. School (Dinajpur).
12	Harendra Nath Sarkar	Badal Primary	Banwarinagar H. E. School (Pabna).
13	Hara Chandra Das	Sardarpara Maktab	Dwarikamari M. V. School (Jalpaiguri).

K. AHMED,

Inspector of Schools, Rajshahi Division.

Registered No. C207

The Calcutta Gazette

THURSDAY, JANUARY 17, 1935.

PART II

Advertisements.

Notices.

Advertisements, Notices, etc., intended for insertion in this part of the Gazette cannot be received after noon on Saturday. All manuscripts and postal remittances must be addressed to Superintendent, Government Printing, Bengal Government Press, Alipore. For the convenience, however, of parties or firms located in Calcutta cash payments of Advertisement charges may be made at Publication Sales Office, Room No. 2, Ground Floor, Writers' Buildings, Calcutta.

Land Sale Notices.

Notification B.

NOTICE is hereby given, under sections 5 and 13 of Act XI of 1859, that unless the arrears (which were due on or before 31st Bhadra, 1341 B. S., of which the latest date of payment was on the 28th day of September 1934, and which will be due on or before 30th Agrahayan, 1341 B. S., of which the latest date of payment will be on the 12th day of January 1935) mentioned below are paid on or before the next latest date of payment, viz., the 12th January 1935, the undermentioned estates or shares of estates in the district of Khulna will be put up for sale at the office of the Collector of that district on the 26th March 1935, at 12 noon, for the said arrears.

Tauzi No.	Name of mahal and pargana.	Sadar jama of whole estate.	Whether the whole estate is to be sold.	If only a share is to be sold, specification of such share or shares.	Names of proprietors of property to be sold.	If only a share is to be sold, the sadar jama of such share.	If the whole estate is to be sold, the arrears due from it.	If only a share is to be sold, the arrears due from it.
1	2	3	4	5	6	7	8	9
		Rs. a. p.				Rs. a. p.	Rs. a. p.	Rs. a. p.
1008	Lot No. 240 north portion, pargana Sundarbans.	3,932 0 0	Whole	....	Kamal Kamini Devi and others.	..	1,378 0 0	..
1009	Lot No. 240 middle portion, pargana Sundarbans.	3,681 0 0	Do.	....	Ditto ..	..	1,323 8 0	..
1010	Lot No. 240 south portion, pargana Sundarbans.	3,181 0 0	Do.	....	C. K. Nag and others	..	232 4 3	..

Khulna, the 21st December 1934.

S. BHATTACHARJI, *for* Collector.

Insolvent Estates.

Half-yearly statements made up to 31st July 1932.

Estates.	Whole amount of receipts.	Whole disbursements.		Balance.	Portion of balance applicable to dividends now payable.	Net balance.	Transfers to unclaimed dividend account under rule 175 and section 122 of the P. T. I. Act of 1909.	Probable outturn of the dependencies.
		Dividends paid.	Other payments.					
	Rs. a. p.	Rs. a. p.	Rs. a. p.	Rs. a. p.	Rs. a. p.	Rs. a. p.	Rs. a. p.	
Annodaprosad Nag (212 of 1912) ..	3,479 3 11	2,640 8 2	477 7 4	361 4 5	....	202 5 4	158 15 1	Nothing further recoverable.
Akhoy Kumar Auddy and Pulin Behary Auddy.	4,624 11 4	....	1,303 5 11	3,321 5 5	....	3,321 5 5	No. 2. ..	Ditto.
Ambica Charun Chuckerbutty (32 of 1914)..	6,680 13 6	3,957 2 1	529 11 8	2,193 15 9	....	202 12 4	1,991 3 5	Ditto.
Albini, Gustave	5,201 0 0	4,277 1 8	595 15 6	327 14 10	....	115 9 10	No. 2. 212 5 0	Ditto.
Ani Chand and another (Anichand Narain-dass) (99 of 1915).	12,766 15 0	10,708 15 2	1,491 9 0	566 6 10	....	....	No. 2. 511 2 0	Ditto.
							No. 2. E. B.— 55 4 10 2,976 5 2	
Ashutosh Dutt and Co. (Hem Ch. Sen) (14 of 1916).	4,626 9 9	3,337 11 8	488 1 10	800 12 3	....	150 12 8	No. 3. 649 15 7	Ditto.
Alexander, Walter Edward (37 of 1916) ..	5,539 15 3	1,925 2 10	456 15 7	3,157 12 10	....	....	No. 2. 3,085 14 0	Ditto.
Anandmoy Dutt and Ram Kumar Dutt ..	5,192 13 1	1,468 14 8	2,091 15 10	1,631 14 7	....	48 12 2	No. 2. E. B.— 71 14 10 1,583 2 5	Ditto.
Anantram (52 of 1919)	8,150 0 0	5,550 3 9	2,362 1 3	237 11 0	....	3 10 0	No. 2. 234 1 0	Ditto.
Ah Hoe	6,617 0 0	4,740 12 8	392 12 6	1,483 6 10	....	494 6 10	No. 2. 989 0 0	Ditto.
							No 2	

Abdul Huq (22 of 1921)	3,705 9 3	1,919 10 5	357 10 1	1,428 4 9	....	99 3 3	1,329 1 6	Ditto.
							No. 2.	
Amulya Charan Sett	6,814 3 6	505 14 6	1,830 9 4	4,477 11 8	....	4,477 11 8	....	Ditto.
Aklas Ahmed and Co.	17,126 0 0	10,378 12 6	2,591 4 1	4,156 9 0	1,932 9 10	341 15 8	1,881 15 6	Ditto.
							No. 2.	
Abdul Majid (206 of 1921)	1,414 14 3	....	856 5 8	558 8 7	....	558 8 7	....	Ditto.
Ahsing, E. I.	626 3 5	460 0 0	107 15 2	58 4 3	....	....	58 4 3	Ditto.
							No. 2.	
Amrita Lall Dey (14 of 1922)	1,411 15 0	878 14 4	141 11 4	391 5 4	....	40 5 4	351 0 0	Ditto.
							No. 2.	
Abdul Samad	11,240 7 2	300 0 0	5,810 8 11	5,129 14 3	....	5,129 14 3	....	Ditto.
Ashfaqur Rahaman	4,586 4 6	2,992 9 1	783 14 2	809 13 3	....	809 13 3	....	Ditto.
Ahmad Ebrahim Salajee (184 of 1921) ..	1,06,629 14 6	95,935 14 10	9,904 5 9	789 9 11	469 11 2	319 14 9	....	Ditto.
Abdul Samad (Abdul Samad Johiruddin) (139 of 1922).	3,106 6 2	....	259 5 2	2,847 1 0	....	2,847 1 0	....	Ditto.
Anath Nath Dey	2,443 1 3	1,672 12 6	495 3 7	275 1 2	....	85 9 9	189 7 5	Ditto.
							No. 2.	
Abdul Huq Samiruddin (Safi Abdul Huq Samiruddin).	3,756 15 2	2,467 4 11	807 13 0	481 13 3	....	481 13 3	....	Ditto.
Akbar Ali (D. S. Murad Walla and Co.) (29 of 1924).	4,554 3 6	....	941 9 5	3,612 10 1	....	3,612 10 1	....	Ditto.
Adahead, Donald Edward	1,254 4 0	774 8 5	144 7 11	335 3 8	....	180 3 2	155 0 6	Ditto.
							No. 2.	
Amorendra Chundra Chundra	680 0 0	....	126 7 1	553 8 11	247 8 0	306 0 11	....	Ditto.
Abraham Ezra Jacob Abraham ..	741 15 3	....	96 8 5	645 6 10	....	645 6 10	....	Ditto.
Andrews, Percival Thomas	830 0 0	495 10 0	116 4 0	218 2 0	....	218 2 0	....	Ditto.
Abadbehary Lal Lala *alias* Behary Lal Lala (1 of 1927).	2,200 0 0	1,557 15 0	191 9 2	450 7 10	439 13 0	10 10 10	....	Ditto.
Amitava Ghose (205 of 1927)	1,183 2 9	....	156 0 8	1,027 2 1	....	1,027 2 1	....	Ditto.
Ashroff Osman Jamal (154 of 1928) ..	465 0 0	....	190 15 9	274 0 3	....	274 0 3	....	Ditto.
Austin, Charles Edward (62 of 1929) ..	800 8 0	....	108 12 2	691 11 10	....	691 11 10	....	Ditto.
Abinash Chundra Shome	219 13 8	....	111 0 11	108 12 9	....	108 12 9	....	Ditto.
Aswini Kumar Chuckerbutty and Nogendra Nath Chuckerbutty.	4,195 13 0	....	1,618 6 6	2,577 6 6	....	2,577 6 6	....	Ditto.
Attar Sing Moolsing and Labhu Ram ..	14,050 0 6	....	1,076 13 3	12,973 3 3	....	12,973 3 3	....	Ditto.
Arun Chunder Sinha	75 0 0	....	....	75 0 0	....	75 0 0	....	Ditto.
Abdul Kahar Mirday	3,592 13 3	283 0 0	684 15 10	2,624 13 5	....	2,624 13 5	....	Ditto.
Audsley, Charles Edward	470 0 0	....	84 0 3	385 15 9	....	385 15 9	....	Outstanding in course of recovery.
Alchin, Archibald John	380 8 0	....	65 0 3	315 7 9	....	315 7 9	....	Ditto.
Awdry, Albert Charles	330 8 0	....	57 2 6	273 5 6	....	273 5 6	....	Ditto.
Abdul Gani Meah	225 8 0	....	52 8 8	172 15 4	....	172 15 4	....	Ditto.
Abdul Razak Abdul Shoban (64 of 1932) ..	387 14 2	....	63 3 4	324 10 10	....	324 10 10	....	Ditto.
Anil Nath Ghose (65 of 1932)	50 0 0	....	43 7 3	6 8 9	....	6 8 9	....	Ditto.
Anderson, Ernest Dennett (101 of 1932) ..	172 14 6	....	20 11 0	152 3 6	....	152 3 6	....	Ditto.
Ashutosh Dutt (141 of 1932)	50 0 0	....	10 4 0	39 12 0	....	39 12 0	....	Ditto.
Anandjee Kanjee (137 of 1932) ..	50 0 0	....	10 4 0	39 12 0	....	39 12 0	....	Ditto.
Atalbehary Mojumdar (158 of 1932) ..	50 0 0	....	....	50 0 0	....	50 0 0	....	Ditto.

Estates.	Whole amount of receipts.	Whole disbursements.		Balance.	Portion of balance applicable to dividends now payable.	Net balance.	Transfers to unclaimed dividend account under rule 175 and section 122 of the P. T. I. Act of 1909.	Probable outturn of the dependencies.
		Dividends paid.	Other payments.					
	Rs. a. p.	Rs. a. p.	Rs. a. p.	Rs. a. p.	Rs. a. p.	Rs. a. p.	Rs. a. p.	
Agacey, Edward Joseph	650 0 0	480 7 4	66 14 6	102 10 2	....	....	76 4 0	Nothing further recoverable.
							No. 2. E. B.— 26 6 2	
Begraj Tularam	3,000 0 0	1,747 13 3	506 9 8	745 9 1	....	745 9 1	....	Ditto.
Benodebehary Sirkar and others ..	1,497 2 3	....	926 13 6	570 4 9	....	570 4 9	....	Ditto.
Buldeodass Periwal and others ..	41,552 11 9	22,880 1 6	17,163 6 3	1,509 4 0	....	115 6 0	1,393 14 0	Ditto.
							No. 2. 2,813 12 5	
						G. P. I— 1,020 1 4		
							No. 3.	
Behary Lall Dutt	1,252 11 6	....	84 2 2	1,168 9 4	....	1,168 9 4	....	Ditto.
							E. B— 74 8 7	
Behary Lall	38,648 0 9	31,448 2 9	6,527 5 3	672 8 9	....	G. P. I— 2,210 3 3		Ditto.
							598 0 2	
							No. 2.	
Bhola Nath Ganguly	5,141 13 11	3,264 9 2	1,769 11 1	107 9 8	....	41 8 4	66 1 4	Ditto.
							No. 2. 608 15 8	
							No. 3.	
Burke, Walter Charles	4,462 13 10	3,507 15 3	457 8 7	497 6 0	....	334 9 7	162 12 5	Ditto.
							No. 2. 574 0 3	
							No. 3.	
Bipro Dass Daw	594 9 6	....	124 14 0	469 11 6	....	469 11 6	....	Ditto.
Betts, C. C. and H. W.	856 2 0	....	133 3 10	722 14 2	....	722 14 2	....	Ditto.
Balkissen Jhawar (Balkissen Sreekissen, Saligram, Ganga Sahai, Balkissen).	5,297 4 6	2,447 12 5	2,483 4 1	366 4 0	....	366 4 0	1,123 2 5	Ditto.
							No. 3.	
Barbar, Frederick	505 6 0	....	127 7 7	377 14 5	....	377 14 5	....	Ditto.
Broja Lall Mukherjee	4,708 5 0	3,361 10 9	490 0 7	856 9 8	....	545 9 0	311 0 8	Ditto.
							No. 2.	
Batuk Nath and another	4,120 6 3	....	2,947 0 9	1,173 5 6	....	1,173 5 6	....	Ditto.
Bhagabut Chundra Nundy and another (Ganga Hari Nundy).	4,367 0 6	56 0 0	1,863 0 2	2,448 0 4	....	2,448 0 4	....	Ditto.

Bux Ellahi	12,320 9 9	7,148 12 10	4,420 4 4	751 8 7	....	....	704 15 8	Ditto.
							No. 2. E. B.— 46 8 11 1,051 0 6	
							No. 3.	
Bepinbehary Ghosh	933 6 0	....	82 15 2	850 6 10	....	850 6 10	....	Ditto.
Bhupaticharan Sett and another ..	728 14 6	....	188 14 1	540 0 5	....	540 0 5	....	Ditto.
Bejoy Krishna Mondal	5,381 15 6	3,547 15 4	894 1 10	939 14 4	....	533 13 2	406 1 2	Ditto.
							No. 2.	
Bell, Hal Montgomeria	1,110 0 0	550 7 6	104 13 10	454 10 8	....	....	E. B.— 5 11 8	Ditto.
							448 15 0	
							No. 2.	
Bhujendra Nath Banerjee	1,581 0 0	663 6 3	326 6 6	591 3 3	....	376 4 4	214 14 11	Ditto.
Barett, George William	670 15 5	131 12 4	180 0 8	359 2 5	....	296 10 6	62 7 11	Ditto.
							No. 2.	
Blackburn, H. P.	4,226 11 6	....	2,456 5 8	1,770 5 10	....	1,770 5 10	....	Ditto.
Bluck, Robert	1,397 6 9	394 11 4	469 2 10	533 8 7	....	533 8 7	....	Ditto.
Bonomali Dey	7,956 3 8	3,784 7 6	2,039 2 10	2,132 9 4	....	59 8 4	2,073 1 0	Ditto.
							No. 2.	
Bhairadan Rakhicha (Ram Chunder Bhairadan and Protap Mull Lukmi Chand).	20,978 9 5	14,909 3 2	2,794 14 11	3,274 7 4	....	2,834 14 11	439 8 5	Ditto.
							No. 2.	
Brook, Charles Henry	2,168 0 9	....	163 13 3	2,004 3 6	....	2,004 3 6	....	Ditto.
Bankubehary Dey	45,430 6 2	35,085 3 11	9,294 11 10	1,050 6 5	....	172 8 2	877 14 3	Ditto.
							No. 2.	
Bhuramull Banka	38,816 6 0	17,036 15 7	18,232 12 4	3,546 10 1	....	2,855 12 0	690 14 1	Ditto.
							No. 2.	
Bankim Chunder Ghose	650 0 0	567 2 7	73 12 6	9 0 11	....	....	E. B.— 9 0 11	Ditto.
							415 12 0	
							No. 3.	
Bhuramull Bhata	865 9 6	....	708 11 8	156 13 10	....	156 13 10	....	Ditto.
Bennett and Sons, W. H.	76,933 15 9	19,155 8 3	51,702 4 1	6,076 3 5	5,344 7 7	664 7 2	67 4 8	Ditto.
							No. 2.	
Birendra Mohun Rukshit	10,679 7 3	103 15 2	10,230 15 4	344 8 9	10 0 3	334 8 6	....	Ditto.
Birendra Nath Singhi and others ..	1,13,099 8 9	77,953 7 5	31,040 2 9	4,105 14 7	581 3 6	1,028 10 4	2,496 0 9	Ditto.
							No. 2.	
Budri Dass Radhakissen	8,126 14 2	5,068 5 0	908 1 0	2,150 8 2	....	1,707 0 5	443 7 9	Ditto.
							No. 2.	
Bhuramull Khothary and another ..	680 12 0	....	179 14 0	500 14 0	....	500 14 0	....	Ditto.
Bhugwanjee and Co.	783 15 8	....	145 10 1	638 5 7	....	638 5 7	....	Ditto.

Estates.	Whole amount of receipts.	Whole disbursements.		Balance.	Portion of balance applicable to dividends now payable.	Net balance.	Transfers to unclaimed dividend account under rule 175 and section 122 of the P. T. I. Act of 1909.	Probable outturn of the dependencies.
		Dividends paid.	Other payments.					
	Rs. a. p.	Rs. a. p.	Rs. a. p.	Rs. a. p.	Rs. a. p.	Rs. a. p.	Rs. a. p.	
Behary Lall Paik	591 10 3	238 3 0	122 2 5	231 4 10	....	164 3 9	67 1 1	Nothing further recoverable.
							No. 2.	
Brachio, Joseph Samuel Walter ..	1,100 0 0	559 0 0	85 0 2	455 15 9	69 8 8	386 7 1	....	Ditto.
Bomanji Scherior Irani	640 2 6	....	112 15 0	527 3 6	....	527 3 6	....	Ditto.
Beeton, Henry	830 0 0	....	82 6 0	747 10 0	....	747 10 0	....	Ditto.
Bejoy Krishna Roy	2,245 0 0	....	669 10 9	1,575 5 3	....	1,575 5 3	....	Ditto.
Baboon Mackertick Catchick	3,336 14 0	....	957 0 6	2,379 13 6	....	2,379 13 6	....	Ditto.
Bhairamull Srilal	539 15 3	....	114 11 1	425 4 2	52 2 0	373 2 2	....	Ditto.
							E. B.—	
Brij Mohun Serowgie	4,763 3 0	2,954 5 10	1,139 13 11	668 15 3	....	....	35 1 9	Ditto.
							633 13 6	
							No. 2.	
Bruce, Edward Lee Bowers	585 0 0	....	109 11 1	475 4 11	....	312 6 6	162 14 5	Ditto.
Bimanbehary Singhee	2,053 3 0	....	292 9 7	1,760 9 5	....	1,760 9 5	....	Ditto.
Behary Lal Sen, Anukul Chunder Sen (Firm Anukul Chunder Sen, Pravash Chunder Sen).	7,503 2 0	1,812 1 1	716 0 6	4,975 0 5	668 4 3	4,306 12 2	....	Ditto.
Bepinbehary Dawn	74,532 3 7	24,644 4 11	41,028 4 7	8,859 10 1	6,733 13 3	163 8 9	1,962 4 1	Ditto.
							No. 2.	
Brahmadutt Haras and Hardass Haras ..	757 13 4	....	119 7 3	638 6 1	....	638 6 1	....	Ditto.
Bischoff, Gerald Theophylus	265 15 3	....	65 14 3	200 1 0	....	200 1 0	....	Ditto.
Bungshidhur Fauzdar	1,691 8 9	....	153 1 10	1,538 6 11	....	1,538 6 11	....	Ditto.
Bimalaprasad Mukherjee, Oriental Traders	50 0 0	....	....	50 0 0	....	50 0 0	....	Ditto.
Burnett, Theodore Herbert	50 0 0	....	2 8 0	47 8 0	....	47 8 0	....	Ditto.
Benode Lal Singha	699 13 6	....	204 6 11	495 6 7	....	495 6 7	....	Ditto.
Brown. H. A.	679 0 0	285 5 8	100 1 0	293 9 4	42 8 0	251 1 4	....	Ditto.
Bridhi Chand Dungardas	13,957 9 11	2,165 8 7	2,629 13 10	9,162 3 6	4,769 7 3	4,392 12 3	....	Outstanding in course of recovery.
Bepinbehary Ghosh	50 0 0	....	....	50 0 0	....	50 0 0	....	Ditto.
Bridhi Chand Punnachand	1,765 8 0	....	191 5 4	1,574 2 8	....	1,574 2 8	....	Ditto.
Barker, William Hyde	1,708 3 1	1,225 7 9	150 11 1	332 0 3	156 0 0	176 0 3	....	Ditto.
Benode Lal Paul and Rusick Lal Paul ..	50 0 0	....	....	50 0 0	....	50 0 0	....	Ditto.
Behary Lal Paul (Rusick Lal Paul Bros.) ..	50 0 0	....	....	50 0 0	....	50 0 0	....	Ditto.
Baker, H. I.	850 0 0	297 12 10	129 1 6	423 1 8	73 11 0	349 6 8	....	Ditto.
Bhimraj Mathuradas	2,452 7 3	245 0 0	401 4 5	1,806 2 10	....	1,806 2 10	....	Ditto.
Bhaniram Sewnundrai	317 13 3	....	109 12 11	208 0 4	....	208 0 4	....	Ditto.
Binraj Hurnundrai	42,408 8 1	....	4,579 2 2	37,829 5 11	....	37,829 5 11	....	Nothing further recoverable.
Bartley, McMurray Percy	230 0 0	....	60 15 0	169 1 0	....	169 1 0	....	Ditto.
Basanta Kumar Dass	50 0 0	....	....	50 0 0	....	50 0 0	....	Ditto.
Burdhon Bros. (Panchugopal Burdhon and Shumbhu Nath Burdhon).	183 3 0	....	129 15 11	53 3 1	....	53 3 1	....	Ditto.

Binraj Sethia	50 0 0	....	....	50 0 0	....	50 0 0	....	Ditto.
Basanta Kumar Paul	1,155 0 0	....	987 1 0	167 15 0	....	167 15 0	....	Ditto.
Brown, Maud Constance	317 12 0	....	100 4 2	217 7 10	....	217 7 10	....	Ditto.
Boloram Shah Chowdhury and Sons ..	3,891 9 3	....	2,581 11 3	1,309 14 0	....	1,309 14 0	....	Ditto.
Burke, Anthony O'Connell	211 6 0	....	65 6 1	145 15 11	....	145 15 11	....	Ditto.
Bohitram Singhania and another ..	5,845 9 3	....	1,012 13 1	4,832 12 2	....	4,832 12 2	....	Ditto.
Bhola Singh Sadis	150 0 0	....	40 14 5	109 1 7	....	109 1 7	....	Ditto.
Bolakidass Chandak	154 0 0	....	28 7 4	125 8 8	....	125 8 8	....	Ditto.
Bucktwarmull Chouthmull	2,859 0 0	30 0 0	448 4 10	2,380 11 2	....	2,380 11 2	....	Ditto.
Baker, Lawrence Stanislaus	235 0 0	....	74 14 0	160 2 0	....	160 2 0	....	Ditto.
Bird, Herbert	375 4 0	....	37 5 0	337 15 0	....	337 15 0	....	Ditto.
Broughton, Maurice Leonel	551 8 0	....	126 1 10	425 6 2	....	425 6 2	....	Ditto.
Barlow, Albert George	261 0 0	....	108 15 5	152 0 7	....	152 0 7	....	Ditto.
Baidya Nath Mullick	75 0 0	....	....	75 0 0	....	75 0 0	....	Outstanding in course of recovery.
Bischoff, Charles Louis (76 of 1932)	1,085 8 5	....	168 9 10	916 14 7	....	916 14 7	....	Ditto.
Barbour, George (firm William Heath) (105 of 1932).	3,050 0 0	....	854 15 4	2.195 0 8	....	2,195 0 8	....	Ditto.
Boileau, Kenneth Clair Freeland (133 of 1932)	50 0 0	....	23 8 0	26 8 0	....	26 8 0	....	Ditto.
Balfour, Douglas (154 of 1932) ..	50 0 0	....	....	50 0 0	....	50 0 0	....	Ditto.
Baitarinidass and Mohadeo	75 0 0	....	....	75 0 0	....	75 0 0	....	Ditto.
Brochio, J. S. W.	290 0 0	60 2 3	29 7 0	200 6 9	....	....	E. B.— 73 2 4 127 4 5	Nothing further recoverable.
Bassler, Dr. Harry Chain (23 of 1916) ..	1,977 3 6	994 15 0	499 12 8	482 7 10	....	24 15 1	No. 2. 457 8 9	Ditto.
Carapiet, George	2,541 1 4	....	723 0 3	1,818 1 1	....	1,818 1 1	No. 2.	Ditto.
Chabi Lall Bora and Runga Lal Bora ..	652 0 0	312 7 9	59 13 7	279 10 8	....	....	E. B.— 18 9 11 261 0 9	Ditto.
Charu Chundra Ghosh	2,750 0 0	....	197 7 0	2,552 9 0	....	2,552 9 0	No. 2.	Ditto.
Charles, Henry Robert	2,795 10 2	1,728 6 1	205 15 5	861 4 8	....	495 1 0	366 3 8	Ditto.
Chogemull Binraj	12,181 9 7	8,489 7 4	2,752 7 7	939 10 8	....	939 10 8	No. 2. 485 14 5	Ditto.
Cleaveland, George William	943 13 0	....	71 9 1	872 3 11	....	872 3 11	No. 3.	Ditto.
Chew, Henry Dunn	950 0 0	414 0 0	173 1 9	362 14 3	....	18 15 1	343 15 2	Ditto.
Chuni Lal Dev *alias* Hirendra Krishna and Nikhilendra Krishna Dev.	2,576 9 6	1,130 15 0	568 8 9	877 1 9	....	34 8 4	No. 2. 842 9 5	Ditto.
Counter, George Allen	510 0 0	....	74 5 6	435 10 6	....	435 10 6	No. 2.	Ditto.
Chaves, Henry Joseph	550 0 0	268 2 9	75 3 0	206 10 3	....	46 15 5	159 10 10	Ditto.
							No. 2.	

Estate.	Whole amount of receipts.	Whole disbursements.		Balance.	Portion of balance applicable to dividends now payable.	Net balance.	Transfers to unclaimed dividend account under rule 175 and section 122 of the P. T. I. Act of 1909.	Probable outturn of the dependencies.
		Dividends paid.	Other payments.					
	Rs. a. p.	Rs. a. p.	Rs. a. p.	Rs. a. p.	Rs. a. p.	Rs. a. p.	Rs. a. p.	
Claudius, James Ezekiel	1,680 2 0	1,517 6 10	68 2 1	94 9 1	....	....	E. B.— 4 9 1 90 0 0	Nothing further recoverable.
Colvin, Mrs. Blanchi Josephine ..	1,569 14 0	644 1 0	298 7 1	627 5 11	....	288 13 1	No. 2. 338 8 10	Ditto.
Chiranji Lall and another	11,900 0 0	2,501 2 3	7,800 5 8	1,598 8 1	....	1,348 8 1	No. 2. 250 0 0	Ditto.
Chandra Kanta Dutt and another ..	25,044 10 0	18,209 0 10	4,868 1 1	1,967 8 1	....	202 15 1	No. 2. 1,764 9 0	Ditto.
Chchi Hamamura	2,613 6 9	600 0 0	1,238 7 9	774 15 0	....	774 15 0	No. 2.	Ditto.
Cheraguddin	615 8 6	....	98 0 2	517 8 4	....	517 8 4	....	Ditto.
Chuni Lall Ghose and Gonesh Lal Ghosh ..	6,444 14 0	1,511 12 5	856 2 11	4,076 14 8	....	842 5 4	3,234 9 4	Ditto.
Chew, Ulric Seaton	1,510 0 0	107 8 0	167 2 0	1,235 6 0	861 0 6	374 5 6	No. 2.	Ditto.
Chatu Lal Biyani	615 11 0	300 0 0	90 6 2	225 4 10	....	225 4 10	....	Ditto.
Chowdhury and Co.	150 0 0	....	100 0 0	50 0 0	....	50 0 0	....	Ditto.
Chouthmull Magunmull	10,656 11 0	....	10,352 15 4	303 11 8	....	303 11 8	....	Ditto.
Clump, Francis Aloysius	1,267 8 0	151 7 6	135 3 4	980 13 2	....	132 0 7	848 12 7	Ditto.
Coriah, Edwin	550 0 0	....	79 13 1	470 2 11	....	470 2 11	No. 2.	Ditto.
Chowdhury and Co.	660 10 0	....	151 10 0	509 0 0	....	509 0 0	....	Ditto.
Cole, Dudley Maurice	3,118 0 0	482 11 1	602 13 4	3,032 7 7	1,261 0 2	771 7 5	....	Ditto.
Cullacott, John Husking	867 2 0	240 13 2	117 12 1	508 8 9	....	178 4 9	330 4 0	Ditto.
Chuny Lall Chouthmull	4,576 2 3	....	503 5 9	4,072 12 6	....	4,072 12 6	No. 2.	Ditto.
Chew, Osmond Aloysius	203 3 0	....	53 15 6	149 3 6	....	149 3 6	....	Ditto.
Coggins, William Munro and Janet Constance	553 8 5	....	113 2 8	440 5 9	....	440 5 9	....	Ditto.
Chuni Lall Dutt	1,361 11 9	214 4 6	860 5 8	287 1 7	129 0 0	158 1 7	....	Ditto.
Caston, Arthur Willoughby	250 12 0	100 7 5	80 8 0	69 12 7	64 15 4	4 13 3	....	Ditto.
Cliffe, Sassoon	7,066 2 0	....	1,918 11 0	5,147 7 0	....	5,147 7 0	....	Ditto.
Chetram Doulatram	1,393 12 0	....	163 7 0	1,230 5 0	....	1,230 5 0	....	Ditto.
Chater, H. G.	807 8 0	67 11 0	264 9 10	475 3 2	434 12 9	40 6 5	....	Ditto.
Cassobhoy, D. M.	62,809 6 1	27,822 15 3	34,984 6 3	2 0 7	....	2 0 7	2,564 8 6	Outstanding in course of recovery.
Chiranji Lal Janki Dass	1,603 0 0	....	278 4 1	1,324 11 11	....	1,324 11 11	No. 3.	Ditto.
Corbet, William Luke	191 0 0	....	78 5 0	112 11 0	....	112 11 0	....	Ditto.

Chimneyram Bhutter	200 0 0	....	32 3 8	167 12 4	....	167 12 4	....	Ditto.
Cheney, Sidney Herbert	2,100 5 0	766 5 11	316 13 0	1,017 2 1	1,013 0 3	4 1 10	....	Ditto.
Charu Chundra Paul	1,153 2 3	....	236 1 7	917 0 8	....	917 0 8	....	Ditto.
Clark, Eva Margaret	5,344 1 6	....	4,031 15 2	1,312 2 4	....	1,312 2 4	....	Ditto.
Carter, Albert James	750 0 0	....	271 10 3	478 5 9	467 1 10	11 3 11	....	Ditto.
Chogmull Buldeodass	75 0 0	....	....	75 0 0	....	75 0 0	....	Ditto.
Chaitram Rambilash	6,043 6 5	....	1,073 14 6	4,969 7 11	....	4,969 7 11	....	Ditto.
Coward, Henry Albert	310 0 0	....	58 9 0	251 7 0	....	251 7 0	....	Ditto.
" Alert George	310 0 0	....	110 5 0	199 11 0	....	199 11 0	....	Ditto.
Chamonard, Antoine Jan Marie ..	887 6 8	528 0 0	150 8 6	208 14 2	187 0 0	21 14 2	....	Ditto.
Chork Ping (Canton Restaurant) ..	7,419 0 0	2,491 1 2	4,784 13 9	143 1 1	58 9 5	84 7 8	....	Ditto.
Chintamony Srinibash Raghunath Rao ..	500 10 0	....	66 3 3	434 6 9	....	434 6 9	....	Ditto.
Champa Lal Domani (Proprietor of the Firm Kesadass Sohun Lall and Kesadass Domani).	8,565 4 6	....	984 10 7	7,580 9 11	....	7,580 9 11	....	Ditto.
Cox, H. J.	1,233 4 0	961 1 11	239 3 7	32 14 6	....	....	E. B.— 13 14 11 18 15 7	Ditto.
Chettishawoo Kalwar	52 8 0	....	2 8 0	50 0 0	....	50 0 0	No. 2.	Ditto.
Chuni Lal Johury and Motilall Johury (47 of 1932).	75 0 0	....	....	75 0 0	....	75 0 0	....	Ditto.
De'Santos, E. J.	507 0 0	153 15 3	65 3 7	287 13 2	....	....	E. B.— 9 14 6 277 14 8	Ditto.
Deveroux, O. N.	448 4 6	370 2 0	43 11 0	34 7 6	....	....	No. 2. 19 14 8	Ditto.
Dulall Chundra Seal and Fanindra Nath Mukharjee.	13,531 5 8	8,110 6 2	1,847 11 4	3,573 4 2	....	141 9 11	No. 2. E. B.— 14 8 10 3,431 10 3	Ditto.
Dhonopaty Nag	267 7 3	....	45 7 3	222 0 0	....	222 0 0	No. 2.	Ditto.
Dhurneydhur Saha	1,820 6 0	....	122 0 2	1,698 5 10	....	1,698 5 10	....	Ditto.
Durlav Chunder Paul	350 0 0	....	67 6 7	282 9 5	....	282 9 5	....	Ditto.
Dukhi Juggernath and Gurupatro Saha ..	659 8 0	....	75 15 1	583 8 11	....	583 8 11	....	Ditto.
Domingo, A. W.	12,261 10 10	10,062 7 9	969 2 0	1,230 1 1	....	....	1,222 8 1	Ditto.
Davidson, Oswald Eric	395 0 0	208 10 2	55 6 4	130 15 6	....	62 14 3	No. 2. E. B.— 7 9 0 68 1 3	Ditto.
Durgaprosad Khettry and Nawal Kishore Khettry.	3,068 1 0	330 8 9	1,783 4 0	954 4 3	....	124 3 10	No. 2. 830 0 5	Ditto.
Doyal Mowzy	86,143 4 10	71,631 12 0	10,837 4 8	3,674 4 2	1,080 9 7	125 7 11	No. 2. 2,468 2 8	Ditto.
							No. 2.	

Estates.	Whole amount of receipts.	Whole disbursements.		Balance.	Portion of balance applicable to dividends now payable.	Net balance.	Transfers to unclaimed dividend account under rule 175 and section 122 of the P. T. I. Act of 1909.	Probable outturn of the dependencies.
		Dividends paid.	Other payments.					
	Rs. a. p.	Rs. a. p.	Rs. a. p.	Rs. a. p.	Rs. a. p.	Rs. a. p.	Rs. a. p.	
Dumaine, C. G.	1,225 10 0	....	62 4 0	1,163 6 0	....	1,163 6 0	....	Nothing further recoverable.
Dover, Percival John	218 1 4	57 5 11	27 4 6	133 6 11	....	....	E. B.— 5 13 2 127 9 9	Ditto.
							No. 2.	
Dhanraj Gunpatrai	34,761 9 6	22,448 5 8	9,450 10 10	2,862 9 0	1,045 12 0	389 8 11	1,427 4 1	Ditto.
							No. 2.	
D'Costa, L. M.	580 0 0	346 9 9	92 2 6	141 3 9	....	62 12 10	78 6 11	Ditto.
							No. 2.	
Debendra Chundra Kar	551 13 0	....	159 6 1	392 6 11	....	392 6 11	....	Ditto.
Day, William Sinclair and Mrs. Alice Grace Day.	722 2 0	....	96 6 6	625 11 6	....	625 11 6	....	Ditto.
D'Rozario, W. P.	769 3 10	....	148 11 0	620 8 10	598 14 5	21 10 5	....	Ditto.
Dickie & Co., R. A.	82,295 14 2	30,565 1 0	46,081 5 2	5,649 8 0	....	1,432 4 6	4,217 3 6	Ditto.
							No. 2.	Outstanding in course of recovery.
Dino Nath Dutt	797 5 9	....	238 9 9	558 12 0	....	558 12 0	....	Ditto.
Dino Nath Dey	593 8 3	32 0 0	141 9 4	419 14 11	....	419 14 11	....	Ditto.
Dwarka Dass Dhunsuk Dass (Dwarka Dass and others).	3,895 5 9	....	3,531 1 4	364 4 5	....	364 4 5	....	Ditto.
Debendra Nath Dutt	729 7 0	....	81 1 6	648 5 6	....	648 5 6	....	Ditto.
De'Cruz, Birchmens Stanislaus ..	892 12 0	503 15 9	130 7 2	258 5 1	71 2 6	187 2 7	....	Ditto.
Ducasse, Ernest Henry	656 15 0	....	159 1 11	497 13 1	....	497 13 1	....	Ditto.
Dev Lall Shah	838 1 0	....	273 8 0	564 9 0	....	564 9 0	....	Ditto.
Dharma Dass Shah	1,734 13 9	1,095 1 9	271 4 0	368 8 0	295 6 4	73 1 8	....	Ditto.
Dear, J. W.	6,974 1 4	2,754 6 4	1,206 12 3	3,012 14 9	....	1,232 3 9	1,780 11 0	Ditto.
							No. 2.	
Davis, M., Mrs.	356 0 0	....	75 8 0	280 8 0	....	280 8 0	....	Ditto.
Dozey, Hugh Arthur	635 0 0	225 6 4	99 1 0	310 8 8	....	60 4 2	250 4 6	Ditto.
							No. 2.	
Dwijendra Nath Sen (Sen & Sen) ..	795 3 3	....	618 4 2	176 15 1	....	176 15 1	....	Ditto.
De'Silva, Henry Berrie	2,039 0 0	702 3 9	211 12 4	1,124 15 11	736 11 0	388 4 11	....	Ditto.
Dakuram Purohit	50 0 0	....	....	50 0 0	....	50 0 0	....	Ditto.
Dhanopati Banerjee	1,528 0 0	....	521 13 11	1,006 2 1	....	1,006 2 1	....	Ditto.
D. N. Samanta Bros.	6,063 2 9	....	3,522 5 2	2,540 13 7	....	2,540 13 7	....	Ditto.
Dinesh Chunder Sen	197 0 0	....	145 5 0	51 11 0	....	51 11 0	....	Ditto.
Durgadas Kar	352 10 0	....	73 15 1	278 10 11	....	278 10 11	....	Ditto.
Dhiraj Lall Mohun Lall	50 0 0	....	....	50 0 0	....	50 0 0	....	Ditto.

Debendra Nath Ghosh, Narendra Nath Ghosh and Jotindra Nath Ghosh.	50 0 0	....	....	50 0 0	....	50 0 0	....	Ditto.
Debendra Nath Bhattacharji	659 6 0	....	329 1 6	330 4 6	....	330 4 6	....	Ditto.
Doulatram Mehra	9,207 13 3	4,768 14 2	1,118 2 3	3,320 12 10	1,821 2 3	1,499 10 7	....	Ditto.
Doyle, Edward Alexander	250 0 0	....	79 8 6	170 7 6	....	170 7 6	....	Ditto.
D. N. Ghose & Bros.	50 0 0	....	....	50 0 0	....	50 0 0	....	Ditto.
Debesh Chundra Ghosh	1,636 0 0	80 0 0	728 2 6	827 13 6	....	827 13 6	....	Ditto.
Davies, George	1,268 2 4	....	141 4 4	1,126 14 0	....	1,126 14 0	....	Ditto.
De'Cruz, Francis Stanislaus	315 0 0	194 2 1	91 10 6	29 3 5	....	29 3 5	....	Ditto.
Dhirendra Nath Mozumdar and another ..	75 0 0	....	....	75 0 0	....	75 0 0	....	Ditto.
Durgaprosad Khettry	161 13 6	....	45 12 10	116 0 8	....	116 0 8	....	Nothing further recoverable.
Duff, Charles Alan	100 0 0	....	45 6 3	54 9 9	....	54 9 9	....	Ditto.
Durgaprasad Khitiram, Subhan Lal and Mohunlal.	2,503 5 0	....	716 5 11	1,786 15 1	....	1,786 15 1	....	Ditto.
DuCasse, Ernest Henry (90 of 1932) ..	51 5 0	....	44 7 0	6 14 0	....	6 14 0	....	Ditto.
Daniels, Louis (116 of 1932)	50 0 0	....	38 10 0	11 6 0	....	11 6 0	....	Ditto.
Dorie Richmond Aloysius (140 of 1932) ..	50 0 0	....	8 0 0	42 0 0	....	42 0 0	....	Ditto.
Daniel, Edwin St. Clair	50 0 0	....	....	50 0 0	....	50 0 0	....	Ditto.
Evans, Hugh Frederick	752 4 0	459 13 11	93 1 3	199 4 10	....	66 13 8	132 7 2	Ditto.
							No. 2.	
Evans, John Hewitt	660 0 0	....	123 2 4	536 13 8	258 4 0	278 9 8	....	Ditto.
Ebrahim Soleman Salajee & Co. (Hazi Azeem Golam Hossain & Co.).	4,89,561 12 8	1,60,761 1 6	2,35,090 10 10	93,710 0 4	92,765 15 8	944 0 8	....	Ditto.
Elahibux and another	748 7 6	....	253 9 11	494 13 7	....	494 13 7	....	Ditto.
Ebrahim Haji Hasan Abdul	1,626 1 0	....	149 8 9	1,476 8 3	....	1,476 8 3	....	Ditto.
Ebrahim Boorah Shamsuddin	17,829 7 9	3,688 15 4	2,338 9 3	11,801 15 2	11,287 13 10	514 1 4	....	Ditto.
Ebrahim	357 3 10	....	83 12 1	273 7 9	....	273 7 9	....	Ditto.
Ezekiel, Jacob Ezekiel	251 2 1	....	50 0 7	201 1 6	....	201 1 6	....	Ditto.
Ezekiel, Jacob Ezekiel and others ..	630 6 3	....	178 9 0	451 13 3	....	451 13 3	....	Ditto.
Ezra, Musleah	2,010 0 0	1,737 4 0	165 3 3	107 8 9	28 0 10	79 7 11	....	Ditto.
Edge, Charles Robert	460 0 0	....	77 4 0	382 12 0	....	382 12 0	....	Ditto.
Eaton, Walter Terence	65 0 0	....	47 14 11	17 1 1	....	17 1 1	....	Ditto.
Eaton, Emilian Joseph	90 0 0	....	53 5 0	36 11 0	....	36 11 0	....	Ditto.
Emda (Firm Emda Abdul Karim) ..	250 0 0	....	83 5 0	166 11 0	....	166 11 0	....	Ditto.
Elk, Thomas	50 0 0	....	42 1 0	7 15 0	....	7 15 0	....	Ditto.
Ezrael, Luba, Miss *alias* Lola	50 10 0	....	45 4 0	5 6 0	....	5 6 0	....	Ditto.
Eden, Ashley	125 0 0	....	53 4 9	71 11 3	....	71 11 3	....	Ditto.
Elliott, Gerthrude Elizabeath	50 0 0	....	21 12 9	28 3 3	....	28 3 3	....	Ditto.
Futteh Chand Chotay Lall	4,325 1 3	....	3,808 5 3	516 12 0	....	516 12 0	....	Ditto.
Frangopoula Iphegenia	1,343 4 6	715 10 11	251 5 1	376 4 6	....	115 7 11	260 12 7	Ditto.
							No. 2.	
Framji & Sons	76,185 1 11	58,841 5 9	13,839 2 3	3,504 9 11	....	273 14 0	3,230 11 11	Ditto.
							No. 2.	
Fazal Ellahi	603 12 9	....	79 5 6	524 7 3	....	524 7 3	....	Ditto.
Futeh Chand Chandmull (Fatteh Chand Domani).	55,229 1 10	47,304 10 2	4,331 7 7	3,593 0 1	....	1,049 4 7	2,543 11 6	Ditto.
							No. 2.	
Farlane, Wilfred Albion	208 15 0	....	51 15 11	156 15 1	....	156 15 1	....	Ditto.
Fanindra Nath Bhattacharjee	111 5 0	....	5 10 7	105 10 5	....	105 10 5	....	Ditto.

Estates.	Whole amount of receipts.	Whole disbursements.		Balance.	Portion of balance applicable to dividends now payable.	Net balance.	Transfers to unclaimed dividend account under rule 175 and section 122 of the P. T. I. Act of 1909.	Probable outturn of the dependencies.
		Dividends paid.	Other payments.					
	Rs. a. p.	Rs. a. p.	Rs. a. p.	Rs. a. p.	Rs. a. p.	Rs. a. p.	Rs. a. p.	
Firdoysi & Co.	6,000 0 0	..	5,325 10 1	674 5 11	..	674 5 11	..	Nothing further recoverable.
Frost, Alfred William	150 0 0	..	50 11 5	99 4 7	..	99 4 7	..	Ditto.
Fink, Norman Archibald	628 0 0	221 2 1	115 9 4	291 4 7	210 8 0	80 12 7	..	Ditto.
Fanindra Nath Banerjee	3,211 2 0	1,911 13 4	1,258 7 5	40 13 3	..	40 13 3	..	Ditto.
Fazal Ellahi	2,455 13 9	1,593 3 2	609 7 5	253 3 2	188 11 10	64 7 4	..	Ditto.
Flynn, Henry James	174 4 0	..	57 3 6	117 0 6	..	117 0 6	..	Ditto.
Fernandez, John Baptiste	1,378 14 6	..	774 4 9	604 9 9	..	604 9 9	..	Ditto.
Friends' Society	50 0 0	..	..	50 0 0	..	50 0 0	..	Ditto.
Fanindra Nath Bhattacharjee and Amulya Kanta Rakshit.	90 5 0	..	4 8 3	85 12 9	..	85 12 9	..	Ditto.
Fitwell & Co.	203 4 0	..	59 8 10	143 11 2	..	143 11 2	..	Ditto.
Frank, Victor George	50 0 0	..	44 2 6	5 13 6	..	5 13 6	..	Ditto.
French, Linna Julia, Miss	50 0 0	..	37 9 0	12 7 0	..	12 7 0	..	Ditto.
Francis, Lewis	50 0 0	..	44 6 6	5 9 6	..	5 9 6	..	Ditto.
Fox, Reginald Norman	50 1 0	..	24 12 0	25 5 0	..	25 5 0	..	Ditto.
Fitzgerald, Richard Auster	76 9 0	..	47 6 3	29 2 9	..	29 2 9	..	Ditto.
Ferozeali Khan Mirza	450 0 0	..	414 15 4	35 0 8	..	35 0 8	..	Ditto.
Francis, Mrs. Millicent	50 0 0	..	43 7 6	6 8 6	..	6 8 6	..	Ditto.
Fitzgerald, Patrick Clifford	50 0 0	..	43 9 0	6 7 0	..	6 7 0	..	Ditto.
Fleming, Emile Terence	50 0 0	..	44 3 9	5 12 3	..	5 12 3	..	Ditto.
Gopal Chandra Dutt	824 2 9	..	161 13 10	662 4 11	..	662 4 11	..	Ditto.
Girendra Chandra Gooyee & others ..	24,282 13 11	18,988 8 7	4,960 7 8	333 13 8	..	269 5 7	64 8 1	Ditto.
							No. 2. 2,950 9 8	
							No. 3.	
Grace, Charles Stewart	594 13 6	153 10 3	56 4 10	384 14 5	..	384 14 5	7 0 0	Ditto.
							No. 3.	
Gobind Lall Mookerjee (703 of 1914) ..	3,205 6 2	..	319 14 9	2,885 7 5	..	2,885 7 5	....	Ditto.
Grand, Harry	819 10 3	438 6 10	218 5 6	162 13 11	..	162 13 11	27 15 4	Ditto.
							No. 3.	
Gobind Das Bhatia	1,416 3 0	..	1,265 3 0	151 0 0	..	151 0 0	..	Ditto.
Ganada Prosanna Ghose and Hari Das Ghose (151 of 1914).	67,354 2 0	42,210 14 0	23,743 0 1	1,400 3 11	..	258 7 6	1,141 12 5	Ditto.
							No. 2. 260 15 10	
							No. 3.	

Gaur Chand Das and Kunjo Pal (238 of 1914).	6,192 11 0	4,739 12 8	874 13 9	578 0 7	..	386 4 11	191 11 8	Ditto.
Gajraj Surana	6,671 11 0	1,567 1 11	3,103 2 10	2,001 6 3	..	1,388 8 7	No. 2. 612 13 8	Ditto.
Gregory, John Marchmount	224 12 10	160 10 0	62 14 4	1 4 6	1 4 6	..	No. 2. ..	Ditto.
Girish Chandra Seal	3,208 10 3	1,733 6 11	595 7 7	879 11 9	..	879 11 9	..	Ditto.
Gangaprosad Kanahya Lall	20,280 8 0	14,469 12 3	3,631 4 7	2,179 7 2	..	131 13 5	2,047 9 9	Ditto.
Goverdhan Das Sewruttan Bunsilall Sewruttan (218 of 1915).	1,455 4 6	522 9 8	332 3 9	600 7 1	..	79 1 8	No. 2. 521 5 5	Ditto.
Gobind Lall Banerjee (Hill & Co.) ..	819 11 6	216 2 10	281 11 3	321 13 5	..	50 7 9	No. 2. 271 5 8	Ditto.
Gubbay Robin Ezra	4,178 7 5	3,110 5 6	379 14 7	688 3 4	..	459 3 11	228 15 5	Ditto.
Ganesh Das Roghubur Dayal	885 8 3	..	242 4 4	643 3 11	..	643 3 11	No. 2. ..	Ditto.
Gangesh Chandra Mookerjee (128 of 1918)..	1,861 4 0	670 8 8	394 12 5	795 4 11	..	107 4 7	688 10 4	Ditto.
Ganesh Lall Daga and another	7,640 12 10	4,964 14 0	812 14 8	1,863 0 2	..	144 15 11	No. 2. 1,718 0 3	Ditto.
Gangaram (Joy Gopal Joy Kissen) (74 of 1920).	47,857 4 11	29,034 15 9	11,109 7 3	7,712 13 11	..	651 10 5	No. 2. 7,061 3 6	Ditto.
Ghaneshyam Das Nund Lall	2,980 0 0	..	227 5 6	2,752 10 6	..	2,752 10 6	No. 2. ..	Ditto.
Gunendra Krishna Mitter (135 of 1920) ..	31,469 1 6	..	18,604 9 8	12,864 7 10	..	12,864 7 10	..	Ditto.
Ghaneshyam Das Kedarnath	720 9 0	..	88 6 5	632 2 7	..	632 2 7	..	Ditto.
Gangadhur (Ghaneshyam Ramnath, Sewdutt Roy, Gungadhur).	5,955 2 10	..	5,051 10 11	903 7 11	..	903 7 11	..	Ditto.
Gobindo Chandra Bose (202 of 1922) ..	2,005 15 6	..	768 1 8	1,237 13 10	..	1,237 13 10	..	Ditto.
Grevelink, P. E.	923 8 0	472 4 7	331 15 9	119 3 8	..	..	E. B— 35 15 8 83 4 0	Ditto.
Gregory, John Marchmount (2nd Insolvency)	99,424 2 4	91,422 11 8	1,876 13 9	6,124 8 11	3,778 13 3	2,345 11 8	No. 2. ..	Ditto.
Girish Chunder Kundu and another (Guru Das Pal & Co.)	5,372 7 0	..	1,461 6 7	3,911 0 5	..	3,911 0 5	..	Ditto.
Giris Chunder Auddy (184 of 1925) ..	1,766 12 3	307 6 1	587 6 4	871 15 10	346 5 11	525 9 11	..	Ditto.
Gunny Hajee Ahmed	1,388 2 0	..	165 10 0	1,222 8 0	..	1,222 8 0	..	Ditto.
Gregory, Lucas (292 of 1925)	3,122 10 1	658 7 3	1,431 0 3	1,033 2 7	264 8 0	768 10 7	..	Ditto.
Gordon, John Hamilton (158 of 1926) ..	4,281 1 5	..	3,914 4 2	366 13 3	..	366 13 3	..	Ditto.
Gobindram Tibriwalla (240 of 1926) ..	2,061 2 9	..	250 11 8	1,810 7 1	..	1,810 7 1	..	Ditto.
Gardiner, Edward John Rowson (28 of 1927)	712 1 3	195 0 0	87 4 4	429 12 11	..	429 12 11	..	Ditto.
Gosto Behary Dey	50 0 0	..	..	50 0 0	..	50 0 0	..	Ditto.
Gobind Lall Rathi	750 0 0	..	216 8 3	533 7 9	..	533 7 9	..	Ditto.
Grant, Charles William (148 of 1927) ..	890 0 0	444 6 5	125 5 5	320 4 2	45 0 0	275 4 2	..	Ditto.
Girish Chundra Sil (154 of 1927) ..	9,742 12 6	3,917 14 6	4,862 10 3	962 3 9	408 12 0	553 7 9	..	Ditto.
Gregory, J. M. (1st Insolvency) (50 of 1915)	29,403 9 6	22,523 6 10	4,649 0 4	2,231 2 4	2,231 2 4	..	..	Ditto.
Griffiths, James Arnold	411 13 0	164 8 3	85 7 5	161 13 4	46 8 0	115 5 4	..	Ditto.
Gubbay, Ezekiel Abraham	12,885 13 0	183 10 8	4,581 13 2	8,120 5 2	690 0 0	7,430 5 2	..	Ditto.

Estates.	Whole amount of receipts.	Whole disbursements.		Balance.	Portion of balance applicable to dividends now payable.	Net balance.	Transfers to unclaimed dividend account under rule 175 and section 122 of the P. T. I. Act of 1909.	Probable outturn of the dependencies.
		Dividends paid.	Other payments.					
	Rs. a. p.	Rs. a. p.	Rs. a. p.	Rs. a. p.	Rs. a. p.	Rs. a. p.	Rs. a. p.	
Gusder & Co., P. E.	50 0 0	..	..	50 0 0	..	50 6 0	..	Nothing further recoverable.
Gosto Behary Auddy	50 0 0	..	..	50 0 0	..	50 0 0	..	Ditto.
Gopal Chundra Dutt (Dutt, Das & Co.) (234 of 1927).	3,593 5 0	685 3 2	786 11 3	2,121 6 7	52 15 8	2,068 6 11	..	Outstanding in course of recovery.
Guzdar & Co., Pestanji Edulji	50 0 0	..	..	50 0 0	..	50 0 0	..	Ditto.
Gopi Mohun Roy Chowdhury (150 of 1929)	2,22,015 1 4	1,89,828 0 0	21,705 13 6	10,481 3 10	5,256 4 11	5,224 14 11	..	Ditto.
Gregory, Mackertich Carapiet (13 of 1930)	5,268 5 6	..	1,531 8 7	3,736 12 11	..	3,736 12 11	..	Ditto.
Green, Stanley S. (40 of 1930)	561 8 0	..	108 1 11	453 6 1	..	453 6 1	..	Ditto.
Ghisulal Chabra and Kesremull Chabra ..	32,190 6 0	..	4,550 6 3	27,639 15 9	..	27,639 15 9	..	Ditto.
Grant, William Sydney Herdman (142 of 1930.)	431 5 0	..	75 1 0	356 4 0	..	356 4 0	..	Ditto.
Goverdhan Das Birji & Co. (179 of 1930) ..	2,064 14 3	..	776 4 10	1,288 9 5	..	1,288 9 5	..	Ditto.
Ganesh Das Brijmohan (59 of 1931) ..	538 5 3	..	219 7 0	318 14 3	..	318 14 3	..	Ditto.
Gregory, H. C. G. (117 of 1931) ..	494 7 9	..	64 12 6	429 11 3	..	429 11 3	..	Ditto,
Gogan Chunder Rajeswar Saha ..	916 12 0	..	422 5 0	494 7 0	..	494 7 0	..	Ditto,
Grueber, Percival Kenneth (201 of 1931) ..	190 0 0	..	51 1 0	138 15 0	..	138 15 0	..	Ditto.
Gadhraj Chiranji Lall (228 of 1931) ..	914 9 3	..	220 1 3	694 8 0	..	694 8 0	..	Ditto.
Gomes, George Joseph (2 of 1932) ..	50 0 0	..	42 15 6	7 0 6	..	7 0 6	..	Ditto.
Gangabux Jhoonjhoonwalla (15 of 1932) ..	50 0 0	..	22 5 0	27 11 0	..	27 11 0	..	Ditto.
Goverdhan Seal	5,300 0 0	1,605 10 10	3,635 2 9	59 2 5	..	..	E. B.— 18 10 10	Nothing further recoverable.
							40 7 7	
							No. 2.	
Godfree, Kenneth (58 of 1932)	50 0 0	..	45 11 6	4 4 6	..	4 4 6	..	Ditto.
Gomes, Eugene W. (67 of 1932) ..	50 15 9	..	41 15 0	9 0 9	..	9 0 9	..	Ditto.
Gillespie, Terence (69 of 1932)	50 0 0	..	44 11 9	5 4 3	..	5 4 3	..	Ditto.
Geeran, Mrs. (70 of 1932)	50 0 0	..	46 6 6	3 9 6	..	3 9 6	..	Ditto.
Golam Rashul (86 of 1932)	50 0 0	..	40 6 9	9 9 3	..	9 9 3	..	Ditto.
Gourchand Mullick (89 of 1932) ..	75 0 0	..	..	75 0 0	..	75 0 0	..	Outstanding in course of recovery.
Gobindprosad Agarwalla (118 of 1932) ..	50 0 0	..	26 14 0	23 2 0	..	23 2 0	..	Ditto.
Gomes, Arnold Boreford (117 of 1932) ..	50 0 0	..	41 6 3	8 9 9	..	8 9 9	..	Ditto.
Gomesh, Lewis Joseph	245 0 0	100 11 7	47 3 6	97 0 11	87 14 8	..	E. B.— 9 2 3	Ditto.
Hari Das Mandal and Mati Lall Sett ..	11,093 10 0	8,824 9 11	561 7 5	1,707 8 8	....	1,018 2 11	689 5 9	Nothing further recoverable.
							No. 2. 520 4 9	
							No. 3.	

Hari Dasi Dasi, Sm. (132 of 1910) ..	60,584 2 1	31,376 14 8	27,330 9 0	1,876 10 5	..	143 1 5	1,733 9 0	Ditto.
							No. 2. 2,584 7 4	
Hurruck Chand & Ram Lall ..	1,880 0 0	..	501 15 8	1,378 0 4	..	1,378 0 4	No. 3. ..	Ditto.
Hajee Noor Mohamed Abu Taleb ..	1,09,472 2 5	34,096 1 0	54,959 2 6	20,416 14 11	..	3,083 8 5	17,333 6 6	Ditto.
Hari Ram and Srinarain (Hari Ram *alias* Kunja Lall).	44,392 15 7	35,174 5 6	7,879 10 10	1,338 15 3	131 15 10	0 1 8	No. 2. 1,206 13 9	Ditto.
							No. 2. 1,575 0 4	
Hoppen, Samuel ..	7,290 4 3	5,282 9 3	1,383 0 6	624 10 6	..	..	No. 3. 624 2 9	Ditto.
							No. 2. E. B.— 0 7 9 535 8 11	
Hera Lall Khemcurn (71 of 1915) ..	12,475 6 3	6,916 14 4	3,605 2 0	1,953 5 11	..	858 11 5	No. 3. 1,094 10 6	Ditto.
Hari Das Sinha & Co. ..	746 12 6	283 10 5	73 1 7	390 0 6	..	..	No. 2. 6 0 7	Ditto.
							No. 2. E. B.— 383 15 11	
Hari Bhusan Mookherjee ..	1,220 2 6	413 10 1	653 9 6	152 14 11	..	133 4 8	19 10 3	Ditto.
Hurdit Singh (151 of 1917) ..	633 1 4	391 8 2	87 14 4	153 10 10	..	74 2 0	No. 2. 79 8 10	Ditto.
Hajee Mohamed Hossain (160 of 1917) ..	626 13 9	..	85 15 5	540 14 4	..	540 14 4	No. 2. ..	Ditto.
Hafiz Emambux & Sons (Hafiz Ahmeddin)	1,145 0 0	234 11 2	233 0 0	677 4 10	..	..	657 10 6	Ditto.
							No. 2. E. B.— 19 10 4	
Hayaham, William Kerr	515 9 0	..	89 12 5	425 12 7	..	425 12 7	..	Ditto.
Hajee Noor Mahomed Jackeria (150 of 1920)	4,76,897 14 9	3,74,990 9 10	86,440 13 10	15,466 7 1	3,778 4 10	937 4 3	10,750 14 0	Ditto.
Harlow, Edwin William	220 0 0	77 4 0	58 9 0	84 3 0	..	..	No. 2. 75 4 6	Ditto.
							No. 2. E. B.— 8 14 6	

Estates.	Whole amount of receipts.	Whole disbursements.		Balance.	Portion of balance applicable to dividends now payable.	Net balance.	Transfers to unclaimed dividend account under rule 175 and section 122 of the P. T. I. Act of 1909.	Probable outturn of the dependencies.
		Dividends paid.	Other payments.					
	Rs. a. p.	Rs. a. p.	Rs. a. p.	Rs. a. p.	Rs. a. p.	Rs. a. p.	Rs. a. p.	
Hulas Chand Boid (164 of 1920) ..	22,204 11 0	17,913 3 7	2,987 15 11	1,303 7 6	..	978 3 2	325 4 4	Nothing further recoverable.
							No. 2.	
Har Kissen Issur Das	24,200 11 5	18,408 10 0	5,006 8 5	785 9 0	..	287 1 10	498 7 2	Ditto.
							No. 2.	
Hafiz Ashanulla Mohamed Omar Bari (49 of 1922).	9,474 13 10	1,286 14 7	5,631 2 5	2,556 12 10	827 10 7	1,729 2 3	..	Ditto.
Hashim Ebrahim Salaji (184 of 1921) ..	13,788 1 0	..	11,530 5 11	2,257 11 1	..	2,257 11 1	..	Ditto.
Hira Lall Johurry (145 of 1922) ..	13,287 13 2	..	10,617 12 2	2,670 1 0	..	2,670 1 0	..	Ditto.
Hyam, Joseph Issac Joseph (185 of 1922)	2,840 6 4	..	254 2 3	2,586 4 1	..	2,586 4 1	..	Ditto.
Hogan, William Bryan (32 of 1923) ..	5,450 0 0	4,980 2 4	374 9 5	95 4 3	..	40 14 8	54 5 7	Ditto.
							No. 2.	
Hodge, G. H. (138 of 1923) ..	299 0 0	..	89 14 0	209 2 0	..	209 2 0	..	Ditto.
Herbert, Hecquet (149 of 1923) ..	5,267 0 3	4,782 14 0	332 14 9	151 3 6	..	1 3 6	150 0 0	Ditto.
							No. 2.	
Habibund Ahmed (142 of 1923) ..	966 0 0	..	116 1 7	849 14 5	..	849 14 5	..	Ditto.
Harendra Krishna Seal (12 of 1924) ..	648 10 1	..	83 10 10	564 15 3	..	564 15 3	..	Ditto.
Hira Lall Moni Lal (17 of 1924) ..	621 12 0	..	82 15 2	538 12 10	..	538 12 10	..	Ditto.
Hemendra Prosad Ghose (186 of 1924) ..	200 0 0	..	186 5 0	13 11 0	..	13 11 0	..	Ditto.
Hunt, Ernest Joseph Seehase (197 of 1924)	2,600 0 0	1,553 15 9	449 3 1	596 13 2	565 6 10	16 6 4	15 0 0	Ditto.
							No. 2. E. B.—	
Hefferen, A. E.	17,976 8 4	14,825 6 4	2,807 0 6	344 1 6	329 9 6	..	14 8 0	Ditto.
Haji Karim Habib Dhorajiwalla (216 of 1924)	1,25,772 5 5	59,149 2 8	57,094 8 6	9,528 10 3	983 14 8	7,516 15 5	1,027 12 2	Ditto.
							No. 2.	
Hajee Amiruddin Mullick (23 of 1925) ..	7,183 6 4	77 14 3	2,813 5 9	4,292 2 4	2,334 4 7	1,957 13 9	..	Ditto.
Hanuman Bux Ram Narain (29 of 1925) ..	627 1 5	..	297 6 0	329 11 5	..	329 11 5	..	Ditto.
Haji Mohamed Haji Jackeria (sole proprietor of Hajee Jackeria Haji Jan Mohamed & Co.) (231 of 1923).	20,867 2 9	2,929 1 4	5,606 3 8	12,331 13 9	6,281 5 2	6,050 8 7	..	Ditto.
Hays, John Hill McCully (138 of 1925) ..	248 0 0	..	32 2 4	215 13 8	..	215 13 8	..	Ditto.
Hira Lall & Co. (169 of 1925) ..	363 0 0	..	43 0 5	319 15 7	..	319 15 7	..	Ditto.
Hill, Charles Atherton (214 of 1925) ..	365 0 0	12 8 1	230 1 4	122 6 7	115 0 0	7 6 7	..	Ditto.
Haramani Ganguly (221 of 1925) ..	988 4 0	66 15 9	201 8 7	719 11 8	589 8 8	130 3 0	..	Ditto.
Hemingway, William George ..	1,798 0 9	279 6 0	276 13 2	1,241 13 7	..	1,085 1 7	156 12 0	Ditto.
							No. 2.	

Harumati Dasi *alias* Hari Dasi (20 of 1926)	450	0	0	114	3	1	150	14	2	184	14	9	115	14	11	68	15	10	..	Ditto.
Hira Lall Dey & Co. (27 of 1926) ..	5,341	7	0	117	8	11	1,379	10	0	3,844	4	1	137	0	0	3,707	4	1	..	Ditto.
Hindly, Thomas William (42 of 1926) ..	860	0	0	..			382	12	0	477	4	0	..			477	4	0	..	Ditto.
Hari Ram Bunshidhur (60 of 1926) ..	296	1	5	..			53	11	9	242	5	8	..			242	5	8	..	Ditto.
Hilton, H. W. (204 of 1926) ..	1,634	14	0	..			267	4	10	1,367	9	2	..			1,367	9	2	..	Ditto.
Hafiz Mohamed Shafi (proprietor of Hajee Ahmed & Sons) (192 of 1927).	24,036	6	8	16,772	5	9	3,461	6	2	3,802	10	9	1,301	5	10	2,501	4	11	..	Outstanding in course of recovery.
Hafiz Maher Ellahi (193 of 1927) ..	8,154	4	6	5,451	6	7	1,079	12	3	1,623	1	8	197	9	5	1,425	8	3	..	Ditto.
Habib Abdulla (Habib Haji Kura & Abdulla Ali Mohamed).	286	0	6	..			71	4	5	214	12	1	..			214	12	1	..	Ditto.
Hardeo Das Jowala Prosad (121 of 1929) ..	3,181	4	6	..			478	3	1	2,703	1	5	..			2,703	1	5	..	Ditto.
Hemanta Kumar Das and Basanta Kumar Das (239 of 1927 and 78 of 1928).	12,296	9	6	7,136	8	0	32	12	0	5,127	5	6	..			5,127	5	6	..	Ditto.
Hansraj Purusuttam Das (22 of 1930) ..	1,067	15	0	..			187	11	7	880	3	5	..			880	3	5	..	Ditto.
Hannumanbux Singhania (71 of 1930) ..	2,365	5	11	..			752	2	5	1,613	3	6	..			1,613	3	6	..	Ditto.
Hemangini Dasi, Sm. (firm Glass Trading Co.) (113 of 1930.)	1,870	10	4	..			919	1	8	951	8	8	..			951	8	8	..	Ditto.
Houston, James Mackelvy (31 of 1930) ..	440	4	0	..			106	0	0	334	4	0	..			334	4	0	..	Ditto.
Hari Sadhan Sirkar (20 of 1931) ..	50	0	0	..			44	13	0	5	3	0	..			5	3	0	..	Ditto.
H. C. Das & Co. (27 of 1931) ..	75	0	0	..			63	6	6	11	9	6	..			11	9	6	..	Ditto.
Harvey, Frank (142 of 1931) ..	51	5	0	..			48	2	0	3	3	0	..			3	3	0	..	Ditto.
Harvey, Arthur Dingwell Fordyce (183 of 1931).	50	0	0	..			43	5	0	6	11	0	..			6	11	0	..	Ditto.
Huyshi, Alfred Edward (197 of 1931) ..	3,471	5	10	1,185	0	0	366	9	6	1,919	12	4	382	10	8	1,537	1	8	..	Ditto.
Hall, R. W. (219 of 1931)	50	0	0	..			45	0	6	4	15	6	..			4	15	6	..	Ditto.
Hafiz Majibar Rohoman and Sujibur Rohoman.)	75	0	0	..			..			75	0	0	..			75	0	0	..	Ditto.
Happen, James Rowland ..	50	4	0	..			45	5	0	4	15	0	..			4	15	0	..	Ditto.
Hazarimull Multan Mull (256 of 1931) ..	75	0	0	..			64	2	0	10	14	0	..			10	14	0	..	Ditto.
Hazarimull Jhawar (20 of 1932) ..	75	0	0	..			35	1	0	39	15	0	..			39	15	0	..	Ditto.
Hrishikesh Chundra	60	0	0	..			56	14	6	3	1	6	..			3	1	6	..	Ditto.
Hakim Sabiruddin (39 of 1932) ..	89	0	0	..			78	9	3	10	6	9	..			10	6	9	..	Ditto.
Hazarilal Khunna	50	0	0	..			40	10	6	9	5	6	..			9	5	6	..	Ditto.
Hardeo Nunda Panda	450	0	0	..			87	0	6	362	15	6	..			362	15	6	..	Ditto.
Hanumandass Nursingdas (144 of 1932) ..	50	0	0	..			..			50	0	0	..			50	0	0	..	Ditto.
Haradhone Jat and Norendra Nath Jat ..	75	0	0	..			..			75	0	0	..			75	0	0	..	Ditto.
Ijad Bux	597	11	3	..			109	11	7	487	15	8	..			487	15	8	..	Nothing further recoverable.
Ismail Issa Wariwalla (76 of 1919) ..	3,187	8	0	603	13	0	265	12	2	2,317	14	10	..			104	7	0	2,213	7 10
																			No. 2.	Ditto.
Issur Sidheswar Dey and Johurlal Dey ..	1,984	10	0	..			1,924	10	0	60	0	0	..			60	0	0	..	Ditto.
Ismail Ibrahim Salajee (184 of 1921) ..	25,149	10	5	..			19,399	4	3	5,750	6	2	..			5,750	6	2	..	Ditto.
Ismail Ebrahim Salejee (184 of 1921) ..	75	0	0	..			37	14	5	37	1	7	..			37	1	7	..	Ditto.
Issac Babel . ..	51	0	0	..			50	5	0	0	11	0	..			0	11	0	..	Ditto.
Jewan Das Jhawar	90,930	15	4	20,878	2	8	61,382	9	8	8,670	3	0	5,245	3	1	781	15	10	2,643	0 1
																			No. 2.	Ditto.
Jalladhur Shaw and Hulladhur Shaw ..	3,471	7	3	723	5	3	1,129	9	0	1,618	9	0	..			81	3	5	1,537	5 7
																			No. 2.	Ditto.

Estates.	Whole amount of receipts.	Whole disbursements.		Balance.	Portion of balance applicable to dividends now payable.	Net balance.	Transfers to unclaimed dividend account under rule 175 and section 122 of the P. T. I. Act of 1909.	Probable outturn of the dependencies.
		Dividends paid.	Other payments.					
	Rs. a. p.	Rs. a. p.	Rs. a. p.	Rs. a. p.	Rs. a. p.	Rs. a. p.	Rs. a. p.	
Jitmull Inder Chand	4,376 6 9	1,549 0 10	1,415 5 7	1,412 0 4	....	....	918 15 7	Nothing further recoverable.
							No. 2. E. B.— 493 0 0	
Jogendra Nath Bose	505 0 0	..	122 15 0	382 1 0	....	382 1 0	....	Ditto.
Jesraj Bridhi Chand	9,738 5 9	7,128 11 1	1,712 0 9	897 9 11	....	107 3 9	790 6 2	Ditto.
Jones, C.	500 10 0	150 10 9	54 11 6	295 3 9	....	111 13 9	No. 2. 183 6 0	Ditto.
Jotindra Nath Mookerjee	19,001 13 11	14,386 3 5	1,026 2 6	3,589 8 0	....	1,347 4 6	No. 2. 2,242 3 6	Ditto.
							No. 2.	
Jiaram (Jiaram Satyanarain) (146 of 1918)	10,036 15 8	7,315 9 9	1,875 11 5	845 10 6	725 4 11	120 5 7	....	Ditto.
Jetha Sankar Chatturbhuj (48 of 1912) ..	7,355 6 2	....	1,007 9 2	6,347 13 0	....	6,347 13 0	....	Ditto.
Jawala Prosad Kaya	1,700 0 0	....	747 14 10	952 1 2	....	952 1 2	....	Ditto.
Juggeswar Das & Sarada Prosad Das & others	758 9 9	....	94 4 2	664 5 7	....	664 5 7	....	Ditto.
Jafferji M. Mohamed Ali	754 3 9	....	115 3 2	639 0 7	....	639 0 7	....	Ditto.
Jan Mohamed Abdul Kader (103 of 1922) ..	731 8 0	....	555 7 10	176 0 2	....	176 0 2	....	Ditto.
Johur Lall Roy and others (175 of 1922) ..	2,011 11 0	....	640 9 1	1,371 1 11	....	1,371 1 11	....	Ditto.
Joy Dev Mullick (39 of 1923) ..	696 8 0	....	130 2 4	566 5 8	327 15 7	238 6 1	....	Ditto.
Jotindra Nath Nundy (255 of 1923) ..	5,315 9 9	....	3,245 10 2	2,069 15 7	....	2,069 15 7	....	Ditto.
Jogendra Nath Kundu (112 of 1924) ..	5,992 5 4	....	475 3 8	5,517 1 8	....	5,517 1 8	....	Ditto.
Juggennath Daga (160 of 1924) ..	3,181 14 3	....	852 7 8	2,329 6 7	....	2,329 6 7	....	Ditto.
James, Thomas Valentine (116 of 1927) ..	340 0 0	....	66 10 11	273 5 1	....	273 5 1	....	Ditto.
Jewraj Nathmull (156 of 1927) ..	8,807 9 3	....	1,876 12 0	6,930 13 3	....	6,930 13 3	....	Ditto.
James, George Frederick (168 of 1928) ..	23,352 13 9	16,285 5 4	4,598 1 4	2,469 7 1	1,795 7 4	673 15 9	....	Ditto.
Jamnadas Kanjee (172 of 1928) ..	2,473 4 9	....	399 8 9	2,073 12 0	1,500 5 6	573 6 6	....	Ditto.
James, Percival (5 of 1929) ..	1,900 0 0	....	159 5 5	1,740 10 7	....	1,740 10 7	....	Ditto.
Jamnadas Tara Chand	911 15 0	....	105 1 0	806 14 0	....	806 14 0	....	Outstanding in course of recovery.
Jewanram Gobindram (137 of 1931) ..	6,362 11 7	....	554 10 1	5,808 1 6	....	5,808 1 6	....	Ditto.
James, Charles (2nd Insolvency) (195 of 1929)	161 11 0	22 8 0	49 12 0	89 7 0	77 12 0	11 11 0	....	Ditto.
Jadavjee Thakur (Bullav Das & Co.) (201 of 1930).	1,700 12 9	....	198 13 3	1,501 15 6	....	1,501 15 6	....	Ditto.
Jamiruddin Mullick (35 of 1919).. ..	400 0 0	....	93 8 0	306 8 0	....	306 8 0	....	Ditto.
Jagannath Purohit (106 of 1931) ..	1,495 10 0	36 0 0	457 7 10	1,002 2 2	....	1,002 2 2	....	Ditto.
Jitsing Dharamsing (Bengal Watch & Co.)	608 10 0	....	167 1 4	441 8 8	....	441 8 8	....	Ditto.
Jyotindra Mohan Mitter	75 0 0	....	37 14 0	37 2 0	....	37 2 0	....	Ditto.
Jnanendra Nath Daw	65 0 0	....	58 7 0	6 9 0	....	6 9 0	....	Ditto.
Jewan Lall Sheopuri	50 0 0	....	31 13 0	18 3 0	....	18 3 0	....	Ditto.

J. N. Biswas & Co.	75 0 0	....	52 6 0	22 10 0	....	22 10 0	....	Ditto.
Jatindra Nath Mondol	50 0 0	....	....	50 0 0	....	50 0 0	....	Ditto.
Juggeswar Hemchand (Jogejibon Hemchand)	1,765 4 0	1,109 0 3	352 1 10	304 1 11	....	....	E. B.— 7 8 8 296 9 3	Ditto.
Kunja Behary Sen and Ram Chunder Sen ..	12,753 2 0	10,753 0 11	930 8 3	1,069 8 10	....	1,069 8 10	No. 2.	Nothing further recoverable.
Kissory Mohun Roy Saha	30,752 14 7	11,989 9 1	17,888 5 4	875 0 2	....	275 3 2	505 5 2	Ditto.
Kali Das Biswas	71,496 4 2	51,435 11 9	19,558 5 10	502 2 7	....	125 2 7	No. 2. E. B.— 94 7 10 377 0 0	Ditto.
Kali Charan Dutt	6,149 0 8	4,211 1 7	621 2 2	1,316 12 11	....	1,315 6 9	No. 2. 1 6 2	Ditto.
Karim Moosa	33,201 12 0	....	31,611 9 6	1,590 2 6	....	1,590 2 6	No. 2.	Ditto.
Kunjo Behary Pal Chowdhury ..	3,720 12 0	2,409 3 11	1,032 10 1	278 14 0	....	278 14 0	1,537 5 3	Ditto.
Kanai Lall Bhur and Jatadhary Bhur ..	9,774 15 4	3,291 4 9	3,229 10 5	3,254 0 2	....	885 1 2	No. 3. 2,368 15 0	Ditto.
							No. 2. 5 5 3	
Koylash Chunder Saha and Kedar Nath Saha (K. C. Saha & Co.).	5,398 15 3	2,918 11 7	600 15 3	1,879 4 5	....	414 5 3	No. 3. 1,464 15 2	Ditto.
Kanai Lall Joynarain (25 of 1916) ..	5,453 9 9	604 1 6	3,865 2 3	984 6 0	....	....	No. 2. E. B.— 16 2 3 968 3 9	Ditto.
Kissen Lall Issuri Lall	505 8 9	94 15 4	113 4 11	297 4 6	....	....	No. 2. 284 10 7	Ditto.
Karunamoy Chatterjee and Debendra Nath Chatterjee (77 of 1918).	8,335 0 0	....	4,102 14 3	4,232 1 9	....	4,232 1 9	No. 2. E. B.— 12 9 11	Ditto.
Kundun Mull Gangaram	8,049 14 3	4,712 6 10	2,036 12 2	1,300 11 3	....	1,148 11 11	151 15 4	Ditto.
Konokendra Nath, Alokendra Nath and Surendra Nath Thakur.	30,939 14 9	23,297 10 4	5,478 13 4	2,163 7 1	....	2,140 6 7	No. 2. 23 0 6	Ditto.
Kheezaree (50 of 1921)	14,767 4 6	1,736 14 0	11,387 12 0	1,642 10 6	569 12 0	1,072 14 6	No. 2.	Ditto.
Kashim Ebrahim Saleji (184 of 1921) ..	1,32,699 4 3	....	1,26,267 5 5	6,431 14 10	....	6,431 14 10	....	Ditto.
Kanhia Lall Sewbux	35,235 8 3	....	35,066 9 1	168 15 2	....	168 15 2	....	Ditto.
Kissory Mohun Ghosh (K. M. Ghosh & Co.)	1,715 12 6	180 0 0	309 12 9	1,225 15 9	614 12 7	611 3 2	....	Ditto.
Kamal Krishna Sinha (P. account) ..	1,666 0 0	1,326 5 1	261 4 0	78 6 11	0 0 5	78 6 6	....	Ditto.
Keshab Lall Dhur (Kanhia Lall Dhur & Sons)	1,346 14 8	200 0 0	235 6 0	911 8 8	....	911 8 8	....	

Estates.	Whole amount of receipts.	Whole disbursements.		Balance.	Portion of balance applicable to dividends now payable.	Net balance.	Transfers to unclaimed dividend account under rule 175 and section 122 of the P. T. I. Act of 1909.	Probable outturn of the dependencies.
		Dividends paid.	Other payments.					
	Rs. a. p.	Rs. a. p.	Rs. a. p.	Rs. a. p.	Rs. a. p.	Rs. a. p.	Rs. a. p.	
Khimjee Kalyanji & Co. (84 of 1923) ..	687 12 3	....	261 11 7	426 0 8	....	426 0 8	....	Nothing further recoverable.
Khagendra Nath Chatterjee ..	2,256 14 0	215 0 0	925 6 3	1,116 7 9	299 0 0	817 7 9	....	Ditto.
Krishnadas and Brijmahun Dass	4,561 8 5	....	3,717 6 0	844 2 5	....	844 2 5	....	Ditto.
Karam Chand Dwarka Das and Moni Lall *alias* Dharam Chand (125 of 1924).	760 15 2	....	184 7 3	576 7 11	....	576 7 11	....	Ditto.
Kanti Lall Bose (32 of 1926) ..	572 12 8	....	137 2 4	435 10 4	....	435 10 4	....	Ditto.
Khetsi Sukh Lal and Chandmull (236 of 1926)	10,971 8 5	5,815 14 2	3,029 0 9	2,126 9 6	535 2 0	1,591 7 6	....	Ditto.
Keatinge, Gilbert (67 of 1927) ..	2,772 13 0	1,382 13 5	230 9 4	1,159 6 3	630 0 0	209 5 10	320 0 5	Ditto.
							No. 2.	
Knight, Frank William (178 of 1927) ..	200 0 0	....	45 0 0	155 0 0	....	155 0 0	....	Ditto.
Kerr, Tarruck & Co. (200 of 1927) ..	4,97,082 13 10	3,08,290 15 4	1,24,969 4 3	63,822 10 3	61,256 2 2	2,566 8 1	....	Ditto.
Keshub Lall Mullick	150 0 0	....	88 6 0	61 10 0	....	61 10 0	....	Ditto.
Kraal, Edith Agnes Miss (199 of 1928) ..	500 0 0	24 12 5	105 11 0	369 8 7	281 7 4	88 1 3	....	Ditto.
Kambu Bearer	150 0 0	5 15 6	49 3 0	94 13 6	68 10 2	26 3 4	....	Ditto.
Kanhya Lall Protap Sing (30 of 1929) ..	17,975 13 0	....	1,522 13 4	16,452 15 8	....	16,452 15 8	....	Ditto.
Kalka Prosad Sukla & Co. (78 of 1929) ..	4,289 5 2	....	723 11 4	3,565 9 10	....	3,565 9 10	....	Ditto.
Khetter Lall Mullick (106 of 1930) ..	58 0 0	....	55 5 3	2 10 9	....	2 10 9	....	Ditto.
Kar, Thomas (120 of 1930)	673 6 0	124 3 2	162 3 8	386 15 2	331 3 2	55 12 0	....	Ditto.
Krishna Kishore Paul (13 of 1931) ..	305 4 10	....	167 1 4	138 3 6	....	138 3 6	....	Ditto.
Knight, Edgar Arnold (53 of 1931) ..	50 0 0	....	46 5 0	3 11 0	....	3 11 0	....	Ditto.
Kali Charan Ghose (89 of 1931) ..	50 0 0	....	40 12 0	9 4 0	....	9 4 0	....	Ditto.
Kazi Fazal Rohaman	50 0 0	....	26 0 0	24 0 0	....	24 0 0	....	Ditto.
Kay, Robert Howden (150 of 1931) ..	50 4 0	....	45 1 0	5 3 0	....	5 3 0	....	Ditto.
Khirode Chunder Hans and Sarat Chunder Hans (Firm New Friends Society) (153 of 1931).	16,057 5 6	....	11,407 4 5	4,650 1 1	....	4,650 1 1	....	Ditto.
Kanhya Lall Khettry and Bholanath Khettry (156 of 1931).	666 1 7	....	150 3 11	515 13 8	....	515 13 8	....	Ditto.
Kerr, Edward Crawshaw (177 of 1931) ..	200 0 0	....	50 7 6	149 8 6	....	149 8 6	....	Ditto.
Khogendra Chundra Dev (200 of 1931) ..	90 0 0	....	52 14 0	37 2 0	....	37 2 0	....	Ditto.
Kuramull Dhariwal Tatia and others ..	591 12 0	....	302 4 9	289 7 3	....	289 7 3	....	Ditto.
Kamala Kanta Dalal (54 of 1932) ..	50 0 0	....	41 11 0	8 5 0	....	8 5 0	....	Outstanding in course of recovery.
Kesrichand Runglal	75 0 0	....	....	75 0 0	....	75 0 0	....	Ditto.
Kasi Nath De	75 0 0	....	....	75 0 0	....	75 0 0	....	Ditto.
Kali Krishna Sen (110 of 1932) ..	50 0 0	....	29 0 9	20 15 3	....	20 15 3	....	Ditto.
Krishna Behary Sen (114 of 1932) ..	50 0 0	....	26 8 0	23 8 0	....	23 8 0	....	Ditto.
Kedar Nath Mukerjee (125 of 1932) ..	50 0 0	....	26 4 6	23 11 6	....	23 11 6	....	Ditto.
Karam Sing (153 of 1932)	50 0 0	....	....	50 0 0	....	50 0 0	....	Ditto.
Longley, Frederick Liddle	431 5 3	....	49 13 0	381 8 3	....	381 8 3	....	Nothing further recoverable.

Luchminarain, Sriballav Ram Prosad Kedarnath, Roghunath Das Futteh Chand and Moti Lall.	1,300 3 0	....	143 9 8	1,156 9 4	....	1,156 9 4	....	Ditto.
Luchminarain Kotary and others ..	8,137 4 6	3,711 1 11	2,448 5 6	1,977 13 1	573 2 4	1,404 10 9	....	Ditto.
Luchmi Das Mothura Das (118 of 1918) ..	1,272 13 7	....	90 1 9	1,182 11 10	....	1,182 11 10	....	Ditto.
Liladhur Lowjee (53 of 1919) ..	3,464 3 6	1,748 8 8	145 1 2	1,570 9 8	44 4 6	1,526 5 2	....	Ditto.
Lall Chand Nope Chand (Bhagwan Das Marwary) (34 of 1919).	26,375 11 0	11,835 10 3	5,672 7 1	8,867 9 8	925 8 7	489 15 6	7,452 1 7	Ditto.
							No. 2.	
Le'Feuvre, Lewis Joseph (57 of 1919) ..	594 9 2	244 0 2	86 11 0	263 14 0	....	76 0 0	187 14 0	Ditto.
							No. 2.	
Ladda Mohamed and Jaffar Mohamed (58 of 1921).	72,650 9 11	28,971 13 6	35,691 8 0	7,987 4 5	....	7,297 11 8	689 8 9	Ditto.
							No. 2.	
				Dr. Balance—		Dr. Balance—		
Le' Franc, R. M.	76 8 3	....	91 10 2	15 1 11	....	15 1 11	....	Ditto.
Luchminarain Dowlutram (155 of 1922) ..	3,601 14 9	....	1,375 10 10	2,226 3 11	....	2,226 3 11	....	Ditto.
Luddie, Nissim Ezra	1,602 9 7	....	139 2 0	1,463 7 7	....	1,463 7 7	....	Ditto.
Levie, Ezra Elias and Judah Elias (179 of 1922).	1,552 4 9	....	828 5 3	723 15 6	....	723 15 6	....	Ditto.
Luchiram Bhoirodan (198 of 1924) ..	3,793 15 11	....	2,378 0 4	1,415 15 7	....	1,415 15 7	....	Ditto.
Lall Mohun Hazra	9,935 0 6	5,233 12 10	857 13 10	3,843 5 10	1,135 6 4	2,707 15 6	....	Ditto.
Leonard, Alfred Hugh (218 of 1925) ..	499 0 0	....	106 10 2	392 5 10	....	392 5 10	....	Ditto.
							E. B.—	
Lucas, James Michoo and Charles, John Lucas	44,890 10 9	1,088 12 6	43,753 5 1	48 9 2	....	....	48 9 2	Ditto.
	18,082 4 9		19,390 0 0				315 1 0	
	550 0 0 (Represents S. P. of G. P. N. and G. P. I.)							
							No. 3.	
Lalit Mohun Sen (37 of 1929) ..	1,524 0 0	626 8 7	779 0 5	118 7 0	8 12 1	109 10 11	....	Ditto.
Leder, Emil (125 of 1930)	2,527 0 4	705 11 2	1,072 1 0	749 4 2	246 8 10	502 11 4	....	Ditto.
Lornie, A. W. (deceased)	6,242 0 7	....	1,657 8 10	4,584 7 9	4,424 12 2	159 11 7	....	Ditto.
Luchman Das Burman (Narain Shahay Chotay Lall) (158 of 1930).	1,198 3 5	....	866 9 7	331 9 10	....	331 9 10	....	Ditto.
Lewis, Andrew (185 of 1930)	1,928 12 8	....	1,562 15 10	365 12 10	....	365 12 10	....	Ditto.
Loch Lach, Geo. E.	167 9 0	....	34 11 0	132 14 0	....	132 14 0	....	Ditto.
Lovegrove, Wilfred Walter	650 0 0	....	88 5 11	561 10 1	....	561 10 1	....	Ditto.
Lobo, Lawrence Stanislaus (281 of 1931) ..	50 15 0	....	41 1 0	9 14 0	....	9 14 0	....	Outstanding in course of recovery.
Lawrence, Percival Joseph (26 of 1932) ..	50 0 0	....	44 3 0	5 13 0	....	5 13 0	....	Ditto.
Loner, Wilfred Harold (25 of 1932) ..	50 0 0	....	42 4 0	7 12 0	....	7 12 0	....	Ditto.
Lawrence, Hamilton (40 of 1932) ..	50 0 0	....	44 9 0	5 7 0	....	5 7 0	....	Ditto.
Lewis, Gladys Ailun, Mrs. (93 of 1932) ..	50 0 0	....	42 10 9	7 5 3	....	7 5 3	....	Ditto.
Lobo, Charles Arthur (156 of 1932) ..	50 0 0	....	2 8 0	47 8 0	....	47 8 0	....	Ditto.
Leeming, Reginald Charles (147 of 1932)	50 0 0	....	....	50 0 0	....	50 0 0	....	Ditto.
Mahomed Amin and others (Golam Kader Sowdajuddin) (146 of 1911).	676 1 9	....	156 0 4	520 1 5	....	520 1 5	....	Nothing further recoverable.
Mohadevprosad Poddar	1,288 11 3	934 0 8	260 8 7	94 2 0	....	....	548 12 8	Ditto.
							No. 3.	
							E. B.—	
							94 2 0	

Estates.	Whole amount of receipts.	Whole disbursements.		Balance.	Portion of balance applicable to dividends now payable.	Net balance.	Transfers to unclaimed dividend account under rule 175 and section 122 of the P. T. I. Act of 1909.	Probable outturn of the dependencies.
		Dividends paid.	Other payments.					
	Rs. a. p.	Rs. a. p.	Rs. a. p.	Rs. a. p.	Rs. a. p.	Rs. a. p.	Rs. a. p.	
Mutty Lall Kundoo and Mukundo Lall Kundoo.	83,751 4 11	73,128 7 1	9,023 13 1	1,599 0 9	1 8 5	1,597 8 4	614 8 3	Nothing further recoverable.
Mitchell, George Greig (190 of 1912) ..	60,429 8 8	16,058 7 7	42,403 3 9	1,967 13 4	....	1,967 13 4	No. 3.	Ditto.
						G. P. I.— 1,700 2 11		
Monnier, Charles Sinclair	650 0 0	359 6 10	70 3 0	220 6 2	....	146 2 3	74 3 11	Ditto.
Marshall, William Newbold	2,170 8 0	818 11 11	271 2 10	1,080 9 3	....	1,080 9 3	No. 2. 444 14 11	Ditto.
Miron Sacc	613 0 6	....	44 13 5	568 3 1	....	568 3 1	No. 3.	Ditto.
Mohun Lall Khanna	822 9 3	....	281 0 0	541 9 3	....	541 9 3	....	Ditto.
Mohun Lall and others (Hursukrai Nanukram)	850 0 0	....	431 7 3	418 8 9	....	418 8 9	....	Ditto.
Monindra Chundra Seal	626 14 0	....	44 0 0	582 14 0	....	582 14 0	....	Ditto.
Martin, Mary Rasalin Edith ..	4,372 5 8	3,249 4 11	370 0 7	753 0 2	....	441 13 0	311 3 2	Ditto.
Mohendra Nath Roy	11,479 4 0	4,819 7 9	2,938 11 2	3,721 1 1	....	216 2 4	No. 2. 3,504 14 9	Ditto.
Monmohun Bose (Nilrutton Biswanath) ..	2,640 14 0	347 3 9	1,236 0 11	1,057 9 4	....	....	No. 2. 1,003 13 8	Ditto.
Madan Lal Deora	3,074 0 0	303 8 0	1,025 0 9	1,745 7 3	1,400 0 0	345 7 3	No. 2. E. B.— 53 11 8	Ditto.
Millard, Mrs. Catherine	761 0 0	532 6 6	74 2 11	154 6 7	....	115 5 4	39 1 3	Ditto.
Madon Lal Gopal Das (168 of 1917) ..	2,556 0 9	1,387 7 3	281 7 3	887 2 3	464 7 4	41 14 9	No. 2. 380 12 2	Ditto.
Mohamad Jacob Abdulla (Mahomed Jacob & & Co.) (38 of 1918).	44,283 7 2	30,779 13 6	10,435 6 11	3,068 2 9	....	350 2 10	No. 2. 2,717 15 11	Ditto.
Monnier, G. A. (60 of 1918)	2,125 0 0	1,684 13 6	216 1 6	224 1 0	....	7 2 8	No. 2. 216 14 4	Ditto.
Mongolchand	415 15 0	84 0 0	61 7 7	270 7 5	123 0 0	147 7 5	No. 2.	Ditto.
McEvans, Joseph Thomas	395 0 0	323 4 0	52 12 0	19 0 0	....	....	15 9 6	Ditto.
							No. 2. E B.— 3 6 6	

Minet, John Brissoult	1,176 11 6	846 9 10	116 15 3	213 2 5	....	....	212 0 1	Ditto.
M. A. C. Ismail and others (114 of 1920) ..	1,94,234 1 10	1,12,702 7 4	62,290 9 6	19,241 1 0	....	8,976 11 11	No. 2. E. B.— 1 2 4 10,264 5 1	Ditto.
Mohamed Saleh Mahomed and another (173 of 1920).	1,495 3 6	....	1,030 1 11	465 1 7	....	465 1 7	No. 2.	Ditto.
Mukunda Lal and Debendra Nath Pal Chowdhuri (66 of 1921).	25,552 11 3	18,813 3 5	1,887 14 6	4,851 9 4	....	465 7 11	4,322 15 5	Ditto.
Mohamed Ishaq (Shaik Mahomed Ishaq) (92 of 1921).	4,778 1 0	1,264 1 2	525 13 7	2,988 2 3	....	1,032 2 10	No. 2. 63 2 0 (D. C. of 1st D. A. transferred to E.) 1,955 15 5	Ditto.
Mussa Ariff Bham and Ismail Ariff Bham (Bham & Co.) (198 of 1921.)	27,809 14 5	10,682 9 3	15,655 2 8	1,472 2 6	4 8 7	1,467 9 11	No. 2.	Ditto.
Maddan, Charles James	1,268 7 0	1,112 9 0	80 5 3	75 8 9	....	....	38 10 0	Ditto.
Mohun Lall Mothura Dass	675 9 4	....	103 2 6	572 6 10	....	572 6 10	No. 2. E. B.— 36 14 9	Ditto.
Mackenzie, Robert Louis Wilson (114 of 1922)	3,559 12 0	....	2,462 11 6	1,097 0 6	....	1,097 0 6	....	Ditto.
Mrigendra Lall Mitter (214 of 1923) ..	13,080 2 6	10,753 9 0	924 7 0	1,402 2 6	....	946 10 8	455 7 10	Ditto.
Mohamed Din (218 of 1922)	659 7 6	....	93 13 6	565 10 0	....	565 10 0	No. 2.	Ditto.
Mahoney, Terence St. Patrick (20 of 1923)	911 7 0	10 11 7	136 4 9	764 6 8	....	326 9 10	437 12 10	Ditto.
Mangal Chand Naita (50 of 1923) ..	579 15 6	....	69 15 7	509 15 11	....	509 15 11	No. 2.	Ditto.
Magnoni, Bertram Gordon	2,056 4 0	1,491 8 9	524 2 2	40 9 1	....	27 15 1	12 10 0	Ditto.
Moulabux (78 of 1923)	5,139 11 8	....	552 14 0	4,586 13 8	....	4,586 13 8	No. 2.	Ditto.
Monorunjun Dhur (132 of 1923) ..	655 6 0	....	188 15 11	466 6 1	305 0 11	161 5 2	....	Ditto.
Mirza Mahomed Munsoor Ali Khan (218 of 1923).	1,498 6 6	....	1,275 9 3	222 13 3	....	222 13 3	....	Ditto.
Manly, Horace Hitchins (206 of 1924) ..	374 15 0	291 5 4	50 4 3	33 5 5	22 0 0	11 5 5	....	Ditto.
Moulvi Mohamed Ali (218 of 1924) ..	514 12 4	....	98 8 1	416 4 3	408 12 0	7 8 3	....	Ditto.
Mohun Lal (222 of 1924)	1,063 5 6	....	111 3 8	952 1 10	....	952 1 10	....	Ditto.
Madhoram Jali and Amrito Lal Jali (46 of 1922).	643 0 10	....	56 12 0	586 4 10	....	586 4 10	..	Ditto.
Meghji Ratanji (241 of 1924)	4,594 2 6	736 8 4	1,868 10 5	1,988 15 9	1,717 10 10	271 4 11	....	Ditto.
Muth, Louis George	700 4 0	3 2 0	105 8 0	591 10 0	257 1 4	334 8 8	....	Ditto.
Mirza Mahomed Baker Ali Khan (190 of 1925)	433 0 0	....	232 10 6	200 5 6	....	200 5 6	....	Ditto.
Monmohun Ghose and Jotindra Mohun Ghose (276 of 1925).	2,111 10 9	338 10 0	185 5 10	1,587 10 11	647 6 9	940 4 2	....	Ditto.
Mohun Lall Kankani	5,107 15 0	3,252 14 5	1,260 2 6	594 14 1	475 1 1	119 13 0	....	Ditto.

Estates.	Whole amount of receipts.	Whole disbursements.		Balance.	Portion of balance applicable to dividends now payable.	Net balance.	Transfers to unclaimed dividend account under rule 175 and section 122 of the P. T. I. Act of 1909.	Probable outturn of the dependencies.
		Dividends paid.	Other payments.					
	Rs. a. p.	Rs. a. p.	Rs. a. p.	Rs. a. p.	Rs. a. p.	Rs. a. p.	Rs. a. p.	
Mohesh Das Khettry (75 of 1926) ..	2,369 15 0	....	345 1 10	2,024 13 2	....	2,024 13 2	....	Nothing further recoverable.
Mazharul Islam (122 of 1926)	1,049 5 0	....	148 6 10	900 14 2	....	900 14 2	....	Ditto.
Manuk, J. M. G. (44 of 1927)	15,350 9 9	10,379 9 0	3,854 6 1	1,116 10 8	681 10 7	435 0 1	....	Ditto.
Moniz Anthoney Francis Carvellahs (9 of 1927).	1,201 11 0	427 4 11	174 9 8	599 12 5	367 6 5	232 6 0	....	Ditto.
Mahomed Shafi (22 of 1927)	794 0 0	....	276 2 3	517 13 9	....	517 13 9	....	Ditto.
Manuk, G. C. S. (149 of 1927)	247 10 0	6 14 5	73 12 4	166 15 3	21 4 0	145 11 3	....	Ditto.
Morrow, William James Angus (171 of 1927)	3,571 14 6	....	949 2 2	2,622 12 4	..	2,622 12 4	....	Ditto.
Mohamed Himat Khan and others (Himmut Khan Changai Khan and Gomani Khan) (190 of 1927).	1,91,001 10 0	96,678 14 6	75,294 15 6	19,027 12 0	10,701 5 5	8,326 6 7	....	Ditto.
Mohamed Shafiq (6 of 1928)	2,393 13 9	811 15 5	651 5 3	930 9 1	418 13 0	511 12 1	....	Ditto.
Manmatha Nath Roy (30 of 1928) ..	880 3 6	427 5 1	410 4 7	42 9 10	7 4 7	35 5 3	....	Ditto.
Madan Lal Missir (123 of 1928) ..	647 7 6	....	126 11 10	520 11 8	....	520 11 8	....	Ditto.
Monindra Chunder Sil (143 of 1928) ..	135 0 0	....	125 8 8	9 7 4	....	9 7 4	....	Ditto.
Murdoch William (Firm W. Murdock & Co.) (158 of 1928).	411 0 11	....	89 10 5	321 6 6	....	321 6 6	....	Ditto.
Mohendra Chundra Pal, Sarat Chunder Pal, Kristo Kumar Pal and Bhairub Chandra Pal (223 of 1928).	1,973 2 0	....	1,908 2 0	65 0 0	....	65 0 0	....	Ditto.
Maher, Joseph Robert (227 of 1928) ..	250 0 0	....	59 6 0	190 10 0	....	190 10 0	....	Ditto.
Madan Lal Luchminarain (63 of 1929) ..	3,452 15 1	....	768 6 6	2,684 8 7	....	2,684 8 7	....	Ditto.
Madhoram Rajendraprosad (65 of 1929) ..	3,541 3 4	....	2,301 15 6	1,239 3 10	....	1,239 3 10	....	Ditto.
Mangi Lall and Gungadhur *alias* Gungadhur *alias* Gungabux (133 of 1929).	145 4 0	....	73 4 4	71 15 8	....	71 15 8	....	Ditto.
Martindale, Gabriel Robert Louis (131 of 1929).	75 0 0	....	65 7 9	9 8 3	....	9 8 3	....	Ditto.
Moharaja Kishore Khanna (183 of 1929) ..	6,273 13 11	....	6,249 7 5	24 6 6	....	24 6 6	....	Ditto.
Monnier, Rudolph Scipio (160 of 1929) ..	3,429 1 4	....	1,391 8 0	2,037 9 4	....	2,037 9 4	....	Ditto.
Mingail, Henry Brooke (122 of 1930) ..	340 11 7	....	103 13 1	236 14 6	....	236 14 6	....	Ditto.
Mahadeoprosad Kanodia (166 of 1930) ..	189 14 0	....	50 4 10	139 9 2	....	139 9 2	....	Outstanding in course of recovery.
McGreger, A. (210 of 1930)	748 8 0	....	310 13 9	437 10 3	....	437 10 3	....	Ditto.
Mathews, Richard Alfred (218 of 1930) ..	610 9 0	....	82 0 10	528 8 2	....	528 8 2	....	Ditto.
Mahomed Faruk (6 of 1931)	10,514 14 8	....	1,161 6 2	9,353 8 6	....	9,353 8 6	....	Ditto.
Mackenzie, W. Raymond	650 4 0	....	113 8 8	536 11 4	....	536 11 4	....	Ditto.
Medlycott, S. R. (29 of 1931)	750 7 6	....	168 5 2	582 2 4	....	582 2 4	....	Ditto.
Madhojee Kalyanjee (44 of 1931) ..	50 0 0	....	20 4 0	29 12 0	....	29 12 0	....	Ditto.
Madan Lall Purohit and Rup Chand Purohit (60 of 1931).	376 15 0	120 0 0	58 14 6	198 0 6	....	198 0 6	....	Ditto.
Maiden, Charles James Dick (76 of 1931) ..	250 8 0	....	52 13 0	197 11 0	....	197 11 0	....	Ditto.
Mangal Das Dwarka Das (78 of 1931) ..	308 0 2	....	82 11 7	225 4 7	....	225 4 7	....	Ditto.
McLaughlin (110 of 1931)	100 0 0	....	48 1 9	51 14 3	....	51 14 3	....	Ditto.
Maurice Panoyalis (133 of 1931) ..	513 12 0	....	147 1 8	366 10 4	86 10 0	280 0 4	....	Ditto.

M. V. Md. Yusuf (169 of 1931) ..	104 6 2	....	60 7 4	43 14 10	....	43 14 10	....	Ditto.
Monnier, L. A. (173 of 1931)	165 0 0	....	48 15 6	116 0 6	....	116 0 6	....	Ditto.
Muralidhur Auddy (263 of 1911) ..	209 8 0	....	81 6 1	128 1 11	....	128 1 11	....	Ditto.
Manly, Marvyn Evelyn (271 of 1931) ..	170 0 0	....	48 13 0	121 3 0	....	121 3 0	....	Ditto.
Mayers, Sylvester Adrian (267 of 1931) ..	225 0 0	....	53 5 0	171 11 0	....	171 11 0	....	Ditto.
Mohesh Chandra Auddy (270 of 1931) ..	575 0 0	....	81 7 0	493 9 0	....	493 9 0	....	Ditto.
Meghraj Surana and others (284 of 1931) ..	387 4 0	....	268 11 11	118 8 1	....	118 8 1	....	Ditto.
Mann, Henry William Thomas (7 of 1932)	570 13 0	....	569 7 9	1 5 3	....	1 5 3	....	Ditto.
Minas, Artic Johannes (16 of 1932) ..	50 0 0	....	45 5 6	4 10 6	....	4 10 6	....	Ditto.
Murlidhur Chowdhury (27 of 1932) ..	50 0 0	....	24 1 6	25 14 6	....	25 14 6	....	Ditto.
Marklew, Frederick Charles (36 of 1932) ..	50 0 0	....	43 6 3	6 9 9	....	6 9 9	....	Ditto.
Mohamed Hasan (37 of 1912) ..	148 12 0	....	63 3 5	85 8 7	....	85 8 7	....	Ditto.
Muralidhur Mitter	50 0 0	....	42 4 0	7 12 0	....	7 12 0	....	Ditto.
McGinley, Michael (50 of 1932) ..	50 0 0	....	45 6 0	4 10 0	....	4 10 0	....	Ditto.
Mahamed Yacub, Mahamed Faruq (68 of 1932).	2,746 15 3	....	809 3 4	1,937 11 11	....	1,937 11 11	....	Ditto.
Mahamed Nasiruddin (82 of 1932) ..	50 0 0	....	42 14 3	7 1 9	....	7 1 9	....	Ditto.
Mongalchand Gobindlal (78 of 1932) ..	5,696 1 0	....	406 7 4	5,289 9 8	....	5,289 9 8	....	Ditto.
Monilal Parekh also known as Monilal Seth (10 of 1933).	50 0 0	....	2 8 0	47 8 0	....	47 8 0	....	Ditto.
Montgomery, George (124 of 1932) ..	50 0 0	....	43 9 9	6 6 3	....	6 6 3	....	Ditto.
Mukund Lal Seth (136 of 1932) ..	50 0 0	....	23 0 0	27 0 0	....	27 0 0	....	Ditto.
Mukundlal Sikdar *alias* M. L. Sikdar (138 of 1932).	50 0 0	....	7 8 0	42 8 0	....	42 8 0	....	Ditto.
Manuel, A. E.	238 1 8	95 15 7	46 0 0	96 2 1	....	....	65 10 0	Ditto.
							No. 2. D. C. of 1st D. A. transferred to E.— 8 1 8 E. B.— 22 6 5	
Nishi Kanto Banerjee	812 8 0	....	240 2 6	572 5 6	....	572 5 6	....	Nothing further recoverable.
Nahapiet, M. M.	4,552 6 10	....	2,420 13 4	2,131 9 6	....	2,131 9 6	....	Ditto.
Nundoo Lal Shaw	1,653 11 0	....	383 0 7	1,270 10 5	....	1,270 10 5	....	Ditto.
Nerode Nath Mukerjee	19,460 0 0	14,345 12 1	2,549 11 5	2,564 8 6	....	2,564 8 6	....	Ditto.
N. C. and A. T. Mojumdar	1,792 13 10	....	219 14 9	1,572 15 1	....	1,572 15 1	....	Ditto.
Norendra Kumar Dutt	421 1 4	....	90 15 10	330 1 6	....	330 1 6	....	Ditto.
Nahapiet Seth Nathapiet and another ..	2,502 8 7	208 8 0	858 8 8	1,435 7 11	....	1,435 7 11	....	Ditto.
Nope Chand	391 9 3	....	81 11 9	309 13 6	....	309 13 6	....	Ditto.
Narain Das Agarwalla	222 10 0	....	94 7 1	128 2 11	....	128 2 11	....	Ditto.
Nathumull Khettry	119 2 9	....	12 9 4	106 9 5	....	106 9 5	....	Ditto.
Nagoremull and another (195 of 1915) ..	524 9 3	....	48 12 1	475 13 2	....	475 13 2	....	Ditto.
Nilmoney Jana and Sarodaprosad Shah (8 of 1916).	9,604 11 11	....	8,607 3 10	997 8 1	....	997 8 1	....	Ditto.
Nogendra Nath Chatterjee	330 0 0	....	47 15 10	282 0 2	....	282 0 2	....	Ditto.
Norendra Nath Bose	1,22,268 13 9	1,05,725 1 7	15,779 2 0	764 10 2	....	365 12 10	398 13 4	Ditto.
							No. 2.	
Nitya Nundo Goswami	1,916 5 1	....	151 11 0	1,764 10 1	....	1,764 10 1	....	Ditto.
Namey Charles Louis	934 1 9	577 3 3	94 3 7	262 10 11	....	262 10 11	....	Ditto.
Nityanundo Dass (54 of 1920) ..	640 0 0	....	55 6 8	584 9 4	....	584 9 4	....	Ditto.

Estates.	Whole amount of receipts.	Whole disbursements.		Balance.	Portion of balance applicable to dividends now payable.	Net balance.	Transfers to unclaimed dividend account under rule 175 and section 122 of the P. T. I. Act of 1909.	Probable outturn of the dependencies.
		Dividends paid.	Other payments.					
	Rs. a. p.	Rs. a. p.	Rs. a. p.	Rs. a. p.	Rs. a. p.	Rs. a. p.	Rs. a. p.	
Nim Chand (57 of 1921)	1,092 1 0	....	897 1 2	194 15 10	....	194 15 10	....	Nothing further recoverable.
Narain Dass (153 of 1921)	4,121 1 6	100 0 0	1,270 9 3	2,750 8 3	....	2,750 8 3	....	Ditto.
Nittyanundo Kundo	228 12 0	....	55 8 4	173 3 8	....	173 3 8	....	Ditto.
Nishi Kanto Chatterjee	1,617 11 0	....	1,535 14 6	81 12 6	....	81 12 6	....	Ditto.
Nilamber Shaw (134 of 1922)	610 0 0	....	124 4 0	485 12 0	....	485 12 0	....	Ditto.
							E. B.—	
Narain Das Doyal (150 of 1910) ..	5,065 7 11	3,111 0 7	1,435 6 0	519 1 4	....	494 14 2	24 3 2	Ditto.
							832 4 4	
							No. 3.	
Newberry Charles Alfred	459 12 0	....	83 13 9	375 14 3	....	375 14 3	....	Ditto.
Nibaran Chunder Dutt (88 of 1923) ..	15,187 11 1	8,049 11 8	2,760 7 0	4,377 8 5	....	2,607 5 8	1,770 2 9	Ditto.
							No. 2.	
Nathuram Charwan Bros. (150 of 1923) ..	534 12 6	....	231 5 9	303 6 9	....	303 6 9	....	Ditto.
Nilmoney Nag	509 8 0	....	45 5 5	464 2 7	....	464 2 7	....	Ditto.
Netai Churn Ghose (267 of 1923) ..	266 12 0	....	65 5 4	201 6 8	....	201 6 8	....	Ditto.
Nripendra Kumar Ghose (219 of 1924) ..	723 8 3	....	65 10 5	657 13 10	....	657 13 10	....	Ditto.
Nala Subaroo Bros.	250 0 0	....	26 8 8	223 7 4	....	223 7 4	....	Ditto.
Nabo Kristo Girish Chundra Das (Chandi Charan Das) (97 of 1925).	454 0 0	....	49 10 2	404 5 10	....	404 5 10	....	Ditto.
Nani Lal Bakuli (141 of 1925)	210 0 0	....	79 8 4	130 7 8	....	130 7 8	....	Ditto.
Nund Kishore Brijmohun (152 of 1925) ..	432 0 2	....	71 15 3	360 0 11	....	360 0 11	....	Ditto.
Nibaran Chundra Indra and Benode Behary Mitter (192 of 1925).	1,115 3 9	....	178 13 10	936 5 11	....	936 5 11	....	Ditto.
Nolin Chunder Shaw (265 of 1925) ..	2,912 0 0	....	860 9 6	2,051 6 6	....	2,051 6 6	....	Ditto.
Nripendra Nath Bose (6 of 1926) ..	415 6 0	....	82 12 11	332 9 1	....	332 9 1	....	Ditto.
Narainram Bhugwanram (51 of 1926) ..	279 15 9	....	87 10 5	192 5 4	....	192 5 4	....	Ditto.
Nishi Kanto Sarkar (232 of 1926) (firm Hem Chunder Sarkar and Bogolamoni Bostralaya).	9,406 10 6	....	1,144 5 1	8,262 5 5	6,455 1 3	1,807 4 2	....	Ditto.
Nogendra Nath Ghose and Abadanta Charan Ghose (214 of 1930).	72 0 0	....	56 6 1	15 9 11	....	15 9 11	....	Ditto.
Nripendra Kumar Bose (16 of 1929) ..	13,796 0 6	7,373 0 3	2,377 2 1	4,045 14 2	793 10 2	3,252 4 0	....	Ditto.
Nell Cecil Newton (24 of 1929) ..	800 11 4	299 6 3	136 7 0	364 14 1	220 0 0	144 14 1	....	Ditto.
Nagoremull (Onkermull Nagoremull) (123 of 1929).	1,270 13 0	....	401 5 6	869 7 6	....	869 7 6	....	Ditto.
Nalinakshya Tah & Co. (117 of 1928) ..	2,018 3 4	....	1,088 6 6	929 12 10	....	929 12 10	....	Ditto.
Nittyanundo Jugobundhoo Shah Chaitun Charan Shah Hrishikesh Shah (firm Jiban Kristo Nittyanundo) (165 of 1929).	300 0 0	....	13 2 3	286 13 9	....	286 13 9	....	Ditto.
Nilmoney Chatterjee (firm Chatterjee and Dass) 202 of 1929).	391 3 0	....	162 6 10	228 12 2	....	228 12 2	....	Ditto.
Nritya Gopal Chaki (72 of 1930) ..	265 0 0	....	81 8 0	183 8 0	....	183 8 0	....	Ditto.

Naoroji Jamshedji Bilmoria (64 of 1930) ..	201 1 0	....	132 6 6	68 10 6	....	68 10 6	....	Ditto.
Nalini Mohun Ghosh (67 of 1930) ..	75 0 0	....	52 15 5	22 0 7	....	22 0 7	....	Ditto.
Nolin Chunder Chatterjee (164 of 1931) ..	1,171 2 0	....	1,154 6 4	16 11 8	....	16 11 8	....	Ditto.
Nund Kishore Poddar (188 of 1931) ..	86 6 7	....	37 15 1	48 7 6	....	48 7 6	....	Ditto.
Nafar Chandra Ghose (234 of 1931) ..	50 0 0	....	27 9 0	22 7 0	....	22 7 0	....	Outstanding in course of recovery.
Narsing Das Soni	3,761 1 0	....	560 6 2	3,200 10 10	....	3,200 10 10	....	Ditto.
Nawal Kishore Agarwalla (88 of 1932) ..	75 0 0	....	35 10 0	39 6 0	....	39 6 0	....	Ditto.
Nripendra Chundra Sen (98 of 1932) ..	50 0 0	....	43 6 9	6 9 3	....	6 9 3	....	Ditto.
Nawrangrai Sureka	50 0 0	....	40 7 3	9 8 9	....	9 8 9	....	Ditto.
Narain Dass (132 of 1932)	50 0 0	....	20 8 0	29 8 0	....	29 8 0	....	Ditto.
Nakul Chandra Bose	50 0 0	....	....	50 0 0	....	50 0 0	....	Ditto.
Oakshatt Arthur Charles (23 of 1923) ..	4,918 2 0	3,342 8 2	901 8 0	674 1 10	....	282 10 10	391 7 0	Nothing further recoverable.
							No. 2. (1st D. A.)	
Onkarmull Shroff (81 of 1928)	3,138 10 10	....	756 14 10	2,381 12 0	....	2,381 12 0	....	Outstanding in course of recovery.
Owen Charles Byrne (130 of 1929) ..	655 0 0	463 8 4	154 8 0	36 15 8	23 14 3	13 1 5	....	Ditto.
Oconner, T. A. (38 of 1931)	1,880 0 0	....	142 2 2	1,737 13 10	1,685 13 0	52 0 10	....	Ditto.
Onkermull Chowdhury (6 of 1932) ..	50 0 0	....	38 5 0	11 11 0	....	11 11 0	....	Ditto.
O'Brien, Ernest Clarence (106 of 1932) ..	741 7 0	....	89 4 10	652 2 2	....	652 2 2	....	Ditto.
Purnendra Nath Sen	1,683 4 1	....	849 12 0	833 8 1	....	833 8 1	....	Nothing further recoverable.
Pimm, J.	913 0 0	54 3 0	555 4 5	303 8 7	....	301 4 7	2 4 0	Ditto.
							No. 2.	
Partridge, Thomas William and Charlotte Angusta Partridge (Partridge & Co.).	5,120 1 0	3,923 6 0	1,088 14 2	107 12 10	....	107 12 10	239 8 3	Ditto.
							No. 3.	
Perot, A. W.	9,671 4 10	4,349 7 1	2,770 2 10	2,551 10 11	....	525 7 4	2,026 3 7	Ditto.
							No. 2	
Parbutty Charan Ash and Johur Lall Ash ..	654 11 6	....	57 5 8	597 5 10	....	597 5 10	....	Ditto.
Pulin Behary Sarkar	233 12 9	....	33 8 0	200 4 9	....	200 4 9	....	Ditto.
Palmer, Edward Thomas	789 0 0	344 5 11	172 5 2	272 4 11	....	....	262 13 7	Ditto.
							No. 2. E. B.— 9 7 4	
Prowling, Albert	330 0 0	243 3 0	50 12 0	36 1 0	....	....	33 8 0	Ditto.
							No. 2. E. B.— 2 9 0	
Prem Lall Dhur (deceased)	16,534 3 3	9,533 14 4	6,728 11 2	271 9 9	....	....	246 6 10	Ditto.
							No. 2. E. B.— 25 2 11	
Pronob Kumar Tagore	1,075 0 0	....	158 4 0	916 12 0	....	916 12 0	....	Ditto.
Purno Chunder Das and Nundo Lal Das ..	7,251 15 0	....	5,163 13 6	2,088 1 6	....	2,088 1 6	....	Ditto.
Probodh Chunder Roy (107 of 1920) ..	2,358 0 0	1,750 8 3	251 9 6	355 14 3	....	211 15 2	143 15 1	Ditto.
							No. 2	

Estates.	Whole amount of receipts.	Whole disbursements.		Balance.	Portion of balance applicable to dividends now payable.	Net balance.	Transfer to unclaimed dividend account under rule 175 and section 122 of the P. T. I. Act of 1909.	Probable outturn of the dependencies.
		Dividends paid.	Other payments.					
	Rs. a. p.	Rs. a. p.	Rs. a. p.	Rs. a. p.	Rs. a. p.	Rs. a. p.	Rs. a. p.	
Panna Lall Chundak and Bros. ..	276 5 0	....	33 0 0	243 5 0	....	243 5 0	....	Nothing further recoverable.
Peary Shaw and Frashat Hossain (Receiver)	1,330 0 0	....	156 7 7	1,173 8 5	....	1,173 8 5	....	Ditto.
Poresh Chunder Bose (132 of 1920) ..	2,899 1 3	1,448 7 3	1,030 6 10	420 3 2	....	155 11 4	264 7 10	Ditto.
							No. 2.	
Puran Chand Hurruck Chand (Surajmull Mangal Chand) (36 of 1921).	23,480 14 6	12,711 15 4	9,640 1 4	1,128 13 10	....	210 0 0	918 13 10	Ditto.
							No. 2.	
Parnall, R. J. (200 of 1921)	1,550 0 0	1,189 8 8	201 4 2	159 3 2	....	56 2 10	103 0 4	Ditto.
							No. 2.	
Profulla Chundra Dutt and another (203 of 1921).	3,468 9 3	1,781 6 6	295 7 6	1,391 11 3	765 14 4	625 12 11	....	Ditto.
Potts Steel & Co.	2,957 10 4	1,143 8 11	758 11 3	1,055 6 2	....	1,013 6 7	41 15 7	Ditto.
							No. 2.	
Profulla Chandra Dutt (204 of 1922) ..	1,222 0 9	....	205 4 1	1,016 12 8	....	1,016 12 8	....	Ditto.
Purusottum Veljee and Khem Chand Veljee (9 of 1923).	562 13 9	258 2 4	123 4 8	181 6 9	....	49 10 4	131 12 5	Ditto.
							No. 2.	
Punchanun Dawn (51 of 1923).. ..	510 0 0	....	123 14 0	386 2 0	....	386 2 0	....	Ditto.
Preo Nath Ghose (71 of 1923)	235 5 9	111 3 6	65 9 10	58 8 5	....	55 6 5	3 2 0	Ditto.
							No. 2.	
Pilcher, H. F. (124 of 1923)	3,722 3 2	....	3,414 11 5	307 7 9	....	307 7 9	....	Ditto.
Phillipsz, Bertram S. (136 of 1924) ..	1,055 0 0	159 2 6	331 14 5	563 15 1	388 0 4	11 0 10	164 13 11	Ditto.
							No. 2.	
Probodh Chunder Banerjee (159 of 1924) ..	2,800 2 9	1,470 4 0	521 0 0	808 14 9	....	194 11 4	614 3 5	Ditto.
							No. 2.	
Probodh Chunder Pramanik and Baidya Nath Pramanik (160 of 1925).	811 5 3	....	151 7 4	659 13 11	....	659 13 11	....	Ditto.
Phool Chand Johurmull (89 of 1925) ..	11,460 10 11	8,940 2 9	1,625 10 9	894 13 5	....	894 13 5	....	Ditto.
Panna Lall Sree Kissen (98 of 1925) ..	44,605 10 3	40,316 10 1	2,780 4 2	1,508 12 0	959 0 11	66 12 6	482 14 7	Ditto.
							No. 2.	
Protap Chand Agarwalla (117 of 1926) ..	2,175 8 0	1,253 9 3	402 6 3	519 8 6	125 0 3	394 8 3	....	Ditto.
Pascal, G. A. S. (211 of 1926)	300 0 0	....	64 12 0	235 4 0	....	235 4 0	....	Ditto.
P. N. Dutt & Co. (38 of 1927)	24,989 10 3	11,061 9 0	3,657 13 3	10,270 4 0	1,351 9 8	8,918 10 4	....	Ditto.
Pote, William Arnold Stephen (59 of 1923)..	65 0 0	....	49 13 0	15 3 0	....	15 3 0	....	Ditto.
Probodh Chunder Sur (163 of 1928) ..	11,436 0 10	9,799 14 1	1,143 7 11	494 10 10	141 7 7	353 3 3	....	Ditto.
Poresh Nath Banerjee (215 of 1928) ..	2,400 4 0	1,107 14 2	213 4 11	1,079 0 11	414 1 9	664 15 2	....	Ditto.

Punchanun Sarkar (57 of 1929) ..	92,140 8 7	85,130 0 8	6,565 7 11	445 0 0	445 0 0	....	....	Ditto.
Prantosh Sing	292 0 0	....	45 1 4	246 14 8	....	246 14 8	....	Ditto.
Purusottum Das Kadernath	469 0 9	....	165 1 6	303 15 3	....	303 15 3	....	Outstanding in course of recovery.
Provash Chunder Saha (24 of 1930) ..	155 0 0	....	70 3 7	84 12 5	....	84 12 5	....	Ditto.
Purusottum Lall Gonesh Prosad (117 of 1930).	275 0 0	....	245 0 0	30 0 0	....	30 0 0	....	Ditto.
Price, Gerald Henry (159 of 1930) ..	959 10 4	136 4 10	164 0 5	659 5 1	591 4 10	68 0 3	....	Ditto.
Purno Chunder Kundu (172 of 1936) ..	475 0 0	....	129 8 0	345 8 0	....	345 8 0	....	Ditto.
Parish, William Eisart (215 of 1930) ..	455 0 0	....	85 12 0	369 4 0	....	369 4 0	....	Ditto.
Purushottum Das Burman (12 of 1931) ..	3,113 13 10	142 0 0	327 4 11	2,644 8 11	....	2,644 8 11	....	Ditto.
Protap Chunder Goutum Bhuttacharjee (24 of 1931).	50 0 0	....	45 5 0	4 11 0	....	4 11 0	....	Ditto.
Punji Lall Benerasi Das	278 0 0	....	230 8 0	47 8 0	....	47 8 0	....	Ditto.
Payne, William Clifford (176 of 1931) ..	350 0 0	....	63 8 6	286 7 6	....	286 7 6	....	Ditto.
Pragdas Pachasia and Gunga Das Pachasia (254 of 1931).	916 6 9	....	148 9 11	767 12 10	....	767 12 10	....	Ditto.
Purnochundra Burmon and Satish Chundra Burmon (19 of 1932).	50 0 0	....	32 13 6	17 2 6	....	17 2 6	....	Ditto.
Price, Edwin Charles Phillip	50 0 0	....	44 2 6	5 13 6	....	5 13 6	....	Ditto.
Phanibhuson Mitra (62 of 1932) ..	75 0 0	....	43 14 0	31 2 0	....	31 2 0	....	Ditto.
Premji Somechand (firm M. Chandu Lal) ..	50 0 0	....	21 1 3	28 14 9	....	28 14 9	....	Ditto.
Pemantle, Oscar Herman	55 0 0	....	46 0 3	8 15 9	....	8 15 9	....	Ditto.
Powell, Henry Leonel	50 0 0	....	44 1 9	5 14 3	....	5 14 3	....	Ditto.
Punna Lall Mukherjee (119 of 1932) ..	50 0 0	....	28 7 0	21 9 0	....	21 9 0	....	Ditto.
Purushottum Damodar, known as P. D. Trikunjee, proprietor of Favourite Soap Works.	131 8 0	....	50 14 3	80 9 9	....	80 9 9	....	Ditto.
Price, Murley Cuttick	50 0 0	....	43 7 0	6 9 0	....	6 9 0	....	Ditto.
Purna Chandra Day	50 0 0	....	....	50 0 0	....	50 0 0	....	Ditto.
Rai Mohan Shaw and others (Hari Das Gopal Kristo Shaw) (150 of 1911).	2,93,641 8 9	1,69,776 13 2	1,12,063 8 5	11,801 3 2	....	8,705 12 8	3,095 6 6	Nothing further recoverable.
							No. 2. 2,179 5 7	
Remfry, John Edward	161 0 0	33 4 6	35 13 0	91 14 6	....	74 8 4	No. 3. 17 6 2	Ditto.
Radha Raman Mullick	3,656 3 1	2,856 5 3	532 5 0	267 8 10	....	....	No. 2. E. B.— 31 5 10 236 3 0	Ditto.
Ram Deo (Dilsook Rai Behary Lall) (16 of 1914).	1,899 1 6	....	183 14 8	1,715 2 10	....	1,715 2 10	No. 2.	Ditto.
Ram Kissen Das and Surajmull ..	5,712 7 2	3,864 7 4	441 9 7	1,406 6 3	....	106 8 9	1,299 13 6	Ditto.
Roger, R. V.	642 0 0	190 12 9	109 13 1	341 6 2	....	81 5 10	No. 2. 260 0 4	Ditto.
Rash Behary Das	2,825 4 3	1,437 6 3	559 6 3	828 7 9	....	317 1 2	No. 2. 511 6 7	Ditto.
							No. 2.	

Estates.	Whole amount of receipts.	Whole disbursements.		Balance.	Portion of balance applicable to dividends now payable.	Net balance.	Transfer to unclaimed dividend account under rule 175 and section 122 of the P. T. I. Act of 1909.	Probable outturn of the dependencies.
		Dividends paid.	Other payments.					
	Rs. a. p.	Rs. a. p.	Rs. a. p.	Rs. a. p.	Rs. a. p.	Rs. a. p.	Rs. a. p.	
Richardson, James Blisset	965 0 0	512 11 2	85 15 6	367 5 4	....	121 15 7	245 5 9	Nothing further recoverable.
							No. 2.	
Rum Bux Agarwalla	404 4 0	....	182 14 4	221 5 8	....	221 5 8	....	Ditto.
Ram Prosad Sudhir and Nolin Mohun Kundu (100 of 1918).	13,515 4 11	3,902 15 8	3,978 1 0	5,634 4 3	1,755 12 1	3,820 5 11	58 2 3	Ditto.
							No. 2.	
Rai Mohun Shaw and others (Bhairub Chundra Khetro Mohun).	10,000 0 0	6,008 6 6	100 2 6	3,891 7 0	....	1,843 7 5	2,047 15 7	Ditto.
							No. 3.	
Ram Protap Brij Mohun	2,033 1 3	498 15 9	395 5 5	1,138 12 1	....	1,114 8 7	24 3 6	Ditto.
							No. 2.	
Ramgopal Khemka (136 of 1920) ..	907 5 6	....	312 14 5	594 7 1	....	594 7 1	....	Ditto.
Rajaram (Srigobindram Rajaram) ..	590 13 9	....	79 10 4	511 3 5	....	511 3 5	....	Ditto.
Radha Nath Chunder	4,07,047 13 7	1,14,501 1 3	2,88,554 1 4	3,992 11 0	2,881 4 2	702 0 11	409 5 11	Ditto.
							No. 2. E. B.—	
Robinson, A. M.	4,363 8 2	3,357 7 9	937 6 3	68 10 2	....	61 10 5	6 15 9 214 9 5	Ditto.
							No. 3.	
Ram Narain Daga	22,679 3 9	11,204 7 3	5,894 0 8	5,580 11 10	2,298 12 9	3,281 15 1	....	Ditto.
Ram Prosad Mullick (85 of 1923) ..	7,271 11 0	....	5,519 13 4	1,751 13 8	....	1,751 13 8	....	Ditto.
Raj Kumar Mukherjee (162 of 1923) ..	6,237 4 0	2,998 15 6	496 5 1	2,741 15 5	....	1,252 9 3	1,489 6 2	Ditto.
							No. 2.	
Ram Narain Mathone (21 of 1924) ..	391 8 0	....	80 11 7	310 12 5	171 11 8	139 0 9	....	Ditto.
Ram Kissen Joy Doyal (64 of 1924) ..	1,592 15 0	....	176 8 3	1,416 6 9	....	1,416 6 9	....	Ditto.
Ramnibash Serowgi (Sew Dutt Roy Ramnibash) (61 of 1924).	1,245 3 3	....	152 8 5	1,092 10 10	....	1,092 10 10	....	Ditto.
Ramessar Jhabarmull Prolhad Roy (27 of 1925).	16,503 1 6	11,245 8 5	2,572 8 5	2,685 0 8	2,481 8 6	203 8 2	....	Ditto.
Rakhal Chunder Dawn	7,968 2 0	180 0 0	2,061 0 8	5,727 1 4	....	5,727 1 4	....	Ditto.
Ram Prosanna Mukherjee (207 of 1925) ..	1,714 4 3	....	308 11 7	1,405 8 8	....	1,405 8 8	....	Ditto.
Ramesh Chundra Chatterjee (236 of 1925)	160 5 4	....	72 7 2	87 14 2	....	87 14 2	....	Ditto.
Ramjer Mohamed (Adam Sajan & Co.) (224 of 1925).	264 9 5	....	61 13 2	202 12 3	....	202 12 3	....	Ditto.
Rolfe, John Herbert Hernon	8,058 1 1	5,577 4 6	1,108 15 10	1,371 12 9	837 2 7	74 0 0	460 10 2	Ditto.
							No. 2.	
Reynold, V. O. (10 of 1926)	610 0 0	110 6 10	145 5 0	354 4 2	326 12 9	27 7 5	....	Ditto.
Ram Protap Ridenda (214 of 1926) ..	9,150 10 0	....	3,938 11 8	5,211 14 4	....	5,211 14 4	....	Ditto.

Rajaram Shaw (244 of 1926)	180 0 0	....	88 2 8	91 13 4	....	91 13 4	....	Ditto.
Ram Satya Dutt (21 of 1927)	1,097 7 3	....	444 13 10	652 9 5	....	652 9 5	....	Ditto.
Ram Chunder Chauthmull (12 of 1927) ..	156 0 0	....	92 6 4	63 9 8	....	63 9 8	....	Ditto.
Ranchore Das Murarjee also called Runchore Moorarjee & Co.) (29 of 1927).	30,292 15 5	11,020 7 9	10,685 4 8	8,587 3 0	5,075 9 3	3,511 9 9	....	Ditto.
Robinson, Arthur Lenox (65 of 1927) ..	550 0 0	....	327 14 10	222 1 2	....	222 1 2	....	Ditto.
Ram Kumar Sen	1,267 0 0	1,072 10 10	174 14 0	19 7 2	....	19 7 2	....	Ditto.
Ruhini Kanto Roy (49 of 1928) ..	290 0 0	....	82 15 0	207 1 0	....	207 1 0	....	Ditto.
Raja Hossain (91 of 1928)	476 0 0	....	100 5 9	375 10 3	....	375 10 3	....	Ditto.
Ram Narain Sree Kissen (100 of 1928) ..	250 0 0	....	39 14 9	210 1 3	....	210 1 3	....	Ditto.
	200 0 0 advanced from M. D. A. Account.							
Ram Chunder Singhi (102 of 1928) ..	1,100 0 0	....	471 5 6	628 10 6	....	628 10 6	....	Ditto.
Ramji Das Kissen Chand	1,571 4 5	....	252 4 5	1,319 0 0	....	1,319 0 0	....	Ditto.
Ram Narain Harsha and others ..	157 4 9	....	35 9 3	121 11 6	....	121 11 6	....	Ditto.
DeRozario, William Percival (39 of 1929) ..	1,040 0 0	....	109 12 6	930 3 6	....	930 3 6	....	Outstanding in course of recovery.
Robinson, H. J. (175 of 1929)	715 0 0	....	119 2 6	595 13 6	....	595 13 6	....	Ditto.
Ram Protap Karnani (34 of 1930) ..	150 5 11	....	56 0 8	94 5 3	....	94 5 3	....	Ditto.
Rung Lal Narsarea and Gajadhar Narsaria (47 of 1930).	50 0 0	....	42 7 0	7 9 0	....	7 9 0	....	Ditto.
Ram Krishna Mohta (133 of 1930) ..	1,758 13 5	....	201 6 0	1,557 7 5	....	1,557 7 5	....	Ditto.
Ranchore Das Murarjee (Gokul Das Aurora) (Private estate).	2,805 13 1	1,225 0 0	341 6 0	1,239 7 1	....	1,239 7 1	....	Ditto.
Rajrup Hanuman Das	2,030 3 6	....	623 3 8	1,406 15 10	....	1,406 15 10	....	Ditto.
Reynolds, John Cummins	310 0 0	....	53 9 0	256 7 0	....	256 7 0	....	Ditto.
Roberts, Robert Henry (131 of 1931) ..	125 0 0	....	53 14 6	71 1 6	....	71 1 6	....	Ditto.
Robertson, E. G. (161 of 1931) ..	78 0 0	....	44 9 4	33 6 8	....	33 6 8	....	Ditto.
Ram Lall Dikhita	75 0 0	....	34 9 0	40 7 0	....	40 7 0	....	Ditto.
Rugh Lal and another	102 4 0	....	46 8 5	55 11 7	....	55 11 7	....	Ditto.
Rogers, Margaret (220 of 1931) ..	50 0 0	....	36 12 0	13 4 0	....	13 4 0	....	Ditto.
Ram Sukh Kapur and Ram Chand Kapur (236 of 1931).	50 0 0	....	22 2 6	27 13 6	....	27 13 6	....	Ditto.
Roghu Shah (261 of 1931)	50 0 0	....	22 9 0	27 7 0	....	27 7 0	....	Ditto.
Radha Nath Dutt & Bros.	50 0 0	....	47 5 0	2 11 0	....	2 11 0	....	Ditto.
Rajpati Misser	50 0 0	....	41 5 9	8 10 3	....	8 10 3	....	Ditto.
Rajendra Chunder Sarkar (32 of 1932) ..	75 0 0	....	53 14 0	21 2 0	....	21 2 0	....	Ditto.
Rebeiro, Gerald Ashby	50 0 0	....	43 10 3	6 5 9	....	6 5 9	....	Ditto.
Ram Chundra Ganti	50 0 0	....	30 14 3	19 1 9	....	19 1 9	....	Ditto.
Robertson, Walter Joseph	50 0 0	....	43 7 3	6 8 9	....	6 8 9	....	Ditto.
Robertson, Emid, Mrs.	50 0 0	....	43 1 6	6 14 6	....	6 14 6	....	Ditto.
Rebeiro, William Herman (96 of 1932) ..	50 0 0	....	43 7 0	6 9 0	....	6 9 0	....	Ditto.
Radha Krishna Nundy (107 of 1932) ..	290 12 0	....	145 9 0	145 3 0	....	145 3 0	....	Ditto.
Rebeiro, William (115 of 1932) ..	50 0 0	....	38 14 9	11 1 3	....	11 1 3	....	Ditto.
Raghuraj Missir	50 0 0	....	....	50 0 0	....	50 0 0	....	Ditto.
Ram Nath Kapur (148 of 1932) ..	50 0 0	....	....	50 0 0	....	50 0 0	....	Ditto.
Shaik Azizuddin	1,041 7 3	....	402 7 9	638 15 6	....	638 15 6	....	Nothing further recoverable.
Sarkies, S. J.	17,698 4 9	....	1,733 6 0	15,959 14 9	....	15,959 14 9	....	Ditto.
Sophianopanloo, J. G.	838 12 0	188 8 8	108 11 0	541 8 4	....	42 12 9	498 11 7	Ditto.

No. 2.

Estates.	Whole amount of receipts.	Whole disbursements.		Balance.	Portion of balance applicable to dividends now payable.	Net balance.	Transfer to unclaimed dividend account under rule 175 and section 122 of the P. T. I. Act of 1909.	Probable outturn of the dependencies.
		Dividends paid.	Other payments.					
	Rs. a. p.	Rs. a. p.	Rs. a. p.	Rs. a. p.	Rs. a. p.	Rs. a. p.	Rs. a. p.	
Sewprasad Johurmull and Khetromull ..	19,848 11 3	11,644 8 9	5,666 8 2	2,537 10 4	....	611 4 1	1,926 6 3	Nothing further recoverable.
							No. 2.	
Solar, Henry Eustace	402 8 9	....	108 1 0	294 7 9	....	294 7 9	....	Ditto.
Sarat Chandra Bose	528 4 5	....	53 1 1	475 3 4	....	475 3 4	....	Ditto.
Soogun Chand Bachawat and others (226 of 1911.)	7,458 13 9	6,095 2 6	951 2 2	412 9 1	....	97 9 1	315 0 0	Ditto.
							No. 2.	
Syed Bux	767 9 3	....	401 12 9	365 12 6	....	365 12 6	....	Ditto.
Soogun Chand Mundra and others (Jesroop Juggernath).	5,752 14 9	1,049 0 6	2,917 5 10	1,786 8 5	....	833 7 7	953 0 10	Ditto.
							No. 2.	
Surendra Nath Pal	610 0 0	....	61 11 0	548 5 0	....	548 5 0	....	Ditto.
Surajmull Surana	650 0 0	....	56 12 0	593 4 0	....	593 4 0	....	Ditto.
Shaik Mohamed Ahmed and Abdul Ghuffur	20,272 5 10	13,412 10 0	3,622 6 2	3,237 5 8	....	3,197 14 8	39 7 0	Ditto.
							No. 2.	
Syed Velayet Ali	4,650 0 4	2,305 4 10	1,577 1 7	767 9 11	....	767 9 11	51 13 0	Ditto.
							No. 3.	
Saillessur & Co.	2,004 14 2	....	538 5 4	1,466 8 10	....	1,466 8 10	....	Ditto.
Sarada Prosad Dawn ..	2,187 3 0	848 9 2	366 1 4	972 8 6	....	165 2 0	807 6 6	Ditto.
							No. 2.	
Salt, W. R.	3,650 0 0	1,451 7 0	2,025 15 0	172 10 0	....	172 10 0	166 12 0	Ditto.
							No. 3.	
Sundar Prosad Kulwar	1,284 14 5	....	495 13 11	788 0 6	....	788 0 6	....	Ditto.
Sewnarain Mohta and others (Dhunraj Mohta.)	1,276 15 6	....	829 8 3	447 7 3	....	447 7 3	....	Ditto.
Sejaur Rohaman and others (S. R. Ahmedin)	6,589 2 11	3,907 3 7	945 7 7	1,736 7 9	....	1,736 7 9	....	Ditto.
Shyam Sundar Agarwalla	2,835 2 9	....	219 7 1	2,615 11 8	....	2,615 11 8	....	Ditto.
Siddhessur Dey	4,597 12 3	1,291 14 7	1,793 3 9	1,512 9 11	....	1,512 9 11	792 15 6	Ditto.
							No. 3.	
Sova Chand Paruck (3 of 1915) ..	2,553 14 6	....	834 1 5	1,719 13 1	....	1,719 13 1	....	Ditto.
Santosh Kumar Majumdar ..	460 0 0	111 2 8	105 5 0	243 8 4	....	58 13 8	184 10 8	Ditto.
							No. 2.	
Sova Chand Idan	807 10 6	....	76 4 11	731 5 7	....	731 5 7	....	Ditto.
Satis Chandra Sen (S. C. Sen & Co.) ..	1,564 4 6	....	126 7 1	1,437 13 5	....	1,437 13 5	....	Ditto.

Sarat Chander Pal and Sarat Chander Pal	48,259 12 0	....	46,614 8 4	1,645 3 8	....	1,645 3 8	....	Ditto.
Shaik Shyam Ali (92 of 1916)	838 3 0	....	87 12 8	750 6 4	....	750 6 4	....	Ditto.
Seehase, August Frederick Carl ..	35,690 11 2	29,500 10 10	3,199 14 4	2,990 2 0	....	....	2,990 2 0	Ditto.
							No. 2.	
Shaik Abdul Aziz (Shaik Arfan Ali) (156 of 1916).	9,168 12 7	6,467 6 11	2,281 7 8	419 14 0	....	419 14 0	..	Ditto.
Subodh Chunder Dutt (Hopsing & Co.) ..	3,130 9 3	1,381 6 10	806 4 11	942 13 6	....	87 5 0	855 8 6	Ditto.
							No. 2.	
Shaik Mahamed Kader Mirza Saheb ..	2,553 14 6	1,936 10 9	228 9 9	388 10 0	....	274 15 9	113 10 3	Ditto.
							No. 2.	
Surajmull Nekeram (Sriram Surajmull) (136 of 1928).	39,251 13 3	36,247 15 9	2,901 14 7	101 14 11	....	101 14 11	..	Ditto.
Sewbux Ram Chunder (138 of 1918) ..	24,103 13 3	14,530 14 11	4,323 7 6	5,249 6 10	1,920 15 1	638 7 1	2,690 0 8	Ditto.
							No. 2.	
Supravat Das (159 of 1918) ..	927 7 6	65 0 0	222 8 3	639 15 3	....	639 15 3	....	Ditto.
Satis Chandra Roy and others (43 of 1920)	26,499 15 0	159 15 6	13,289 8 6	13,050 7 0	....	13,050 7 0	....	Ditto.
Satcowri Chatterjee (91 of 1918) ..	60,288 3 0	26,165 6 7	27,195 11 10	6,927 0 7	....	509 2 0	6,417 14 7	Ditto.
							No. 2.	
Shyam Das Banerjee	988 11 6	....	121 10 1	867 1 5	....	867 1 5	....	Ditto.
Seldana, A. I.	5,735 9 3	1,074 13 8	3,415 8 7	1,245 3 0	....	1,223 14 5	21 4 7	Ditto.
							No. 2.	
Sewjeeram Mugurram	53,782 2 6	....	53,296 12 3	485 6 3	....	485 6 3	....	Ditto.
Shamjee Rowjee & Co. (162 of 1920) ..	65,117 0 3	41,554 2 11	16,436 11 9	7,126 1 7	2,914 9 7	498 9 3	3,712 14 9	Ditto.
							No. 2	
Staynor, John Birnard	7,825 0 0	6,987 4 8	506 1 6	331 9 10	124 4 9	99 13 3	107 7 10	Ditto.
							No. 2.	
Sultan Zia	375 2 0	....	56 2 1	318 15 11	....	318 15 11	....	Ditto.
Surendra Nath Pramanick (65 of 1921) ..	2,838 3 0	....	186 2 3	2,652 0 9	....	2,652 0 9	....	Ditto.
Shaik Aziz Abdul Huq (94 of 1921) ..	2,878 10 0	1,177 1 4	1,061 12 9	639 11 11	....	344 10 11	295 1 0	Ditto.
							No. 2.	
Sailendra Krishna Roy and another (90 of 1921).	79,298 10 1	....	78,351 15 11	946 10 2	....	946 10 2	....	Ditto.
Sochindra Mohan Sha (175 of 1921) ..	1,790 2 0	110 0 0	444 5 11	1,235 12 1	508 0 0	727 12 1	....	Ditto.
Sarat Chunder Bhar and another ..	21,595 8 9	8,626 10 11	8,321 13 5	4,647 0 5	3,043 5 2	105 12 1	1,497 15 2	Ditto.
							No. 2.	
Sutcoree Poddar (Ram Ruttan Gojadhur) (183 of 1921).	18,790 12 3	16,477 13 8	1,261 5 11	1,051 8 8	....	467 10 10	583 13 10	Ditto.
							No. 2.	
							489 7 11	
							No. 3.	

Estates.	Whole amount of receipts.	Whole disbursements.		Balance.	Portion of balance applicable to dividends now payable.	Net balance.	Transfer to unclaimed dividend account under rule 175 and section 122 of the P. T. I. Act of 1909.	Probable outturn of the dependencies.
		Dividends paid.	Other payments.					
	Rs. a. p.	Rs. a. p.	Rs. a. p.	Rs. a. p.	Rs. a. p.	Rs. a. p.	Rs. a. p.	
Syed Habibur Rahman Choudhury ..	6,806 1 4	3,824 13 8	427 5 9	2,553 13 11	2,452 9 0	101 4 11	....	Nothing further recoverable.
Shibghatulla Bary (56 of 1922) ..	6,219 4 10	....	1,804 4 1	4,415 0 9	....	4,415 0 9	....	Ditto.
Saley Mohamed (165 of 1922)	72 3 3	....	28 5 4	43 13 11	....	43 13 11	....	Ditto.
Sandys, Edwin Francis	3,967 10 0	2,622 15 3	289 15 0	1,054 11 9	....	....	1,002 1 8	Ditto.
							No. 2. E. B.— 52 10 1	
Shaik Mohamed Ismail Chandra (189 of 1922)	2,276 12 3	....	839 10 7	1,437 1 8	....	1,437 1 8	....	Ditto.
Satya Charan Nath (238 of 1922) ..	1,407 10 9	....	150 3 1	1,257 7 8	....	1,257 7 8	....	Ditto.
Southwell, Phillip William (117 of 1923) ..	1,650 0 0	841 8 0	126 7 4	682 0 8	309 10 10	372 5 10	....	Ditto.
Satish Chunder Ghose and Susil Kumar Adhikary (143 of 1923).	4,581 9 0	....	317 12 1	4,263 12 11	....	4,263 12 11	....	Ditto.
Sikdar & Co. (173 of 1922)	1,277 15 3 401 15 0 Represents advance from M. D. R. account.	....	729 0 6	548 14 9	....	548 14 9	....	Ditto.
Shaik Serajuddin (Mohamed Ebrahim) (182 of 1923).	8,579 5 6	4,834 3 1	1,027 12 10	2,717 5 7	....	690 5 3	2,027 0 4	Ditto.
							No. 2	
Soshi Bhusan Bhattacharjee (95 of 1918) ..	1,153 5 1	342 12 7	589 14 3	220 10 3	196 5 2	24 5 1	....	Ditto.
Sewnarain Hur Chand Roy (22 of 1924) ..	644 12 0	297 11 7	101 3 3	245 13 2	43 0 4	202 12 10	....	Ditto.
Surendra Nath Basant Kumar and Nogendra Nath Naik.	30,289 9 3	21,969 11 7	4,726 4 1	3,593 9 7	1,142 8 8	584 0 8	1,867 0 3	Ditto.
							No. 2.	
Sasti Kinkar Banerjee (195 of 1924) ..	1,774 10 7	....	281 12 8	1,492 13 11	....	1,492 13 11	....	Ditto.
Suttyendra Chunder Sur	335 4 0	....	61 6 5	273 13 7	191 10 9	82 2 10	....	Ditto.
Sewlall Takatmull (210 of 1924) ..	14,550 0 0	....	14,201 2 0	348 14 0	....	348 14 0	....	Ditto.
Sachhidanando Bagchi (211 of 1924) ..	11,422 12 0	....	999 7 11	10,423 4 1	....	10,423 4 1	....	Ditto.
Satish Chunder Banerjee (231 of 1924) ..	1,781 4 0	....	931 8 1	849 11 11	....	849 11 11	....	Ditto.
Sewnarain	566 14 0	....	124 0 5	442 13 7	....	442 13 7	....	Ditto.
Sewnundrai Kedarnath	16,483 12 7	13,288 8 0	2,399 12 1	795 8 6	....	252 9 1	542 15 5	
							No. 2.	
Sumermull Parekh and Pannalall Parekh (38 of 1925).	600 0 0	328 14 7	186 14 10	84 2 7	....	84 2 7	....	Ditto.
Srish Chunder Dawn (110 of 1925) ..	256 0 0	....	88 2 4	167 13 8	....	167 13 8	....	Ditto.
Sunanda Chandra Sen	610 0 0	31 14 6	99 15 0	478 2 6	192 8 0	285 10 6	....	Ditto.
Sugun Chand Ram Chunder	961 8 9	....	176 3 5	785 5 4	....	785 5 4	....	Ditto.

Sundarmull (139 of 1925)	2,199 4 0	387 7 8	245 14 9	1,565 13 7	1,085 2 5	480 11 2	....	Ditto.
Shibo Kali Manna	47 8 0	....	34 8 0	13 0 0	....	13 0 0	....	Ditto.
Sarat Chunder Mitter	1,616 0 0	....	1,407 2 0	208 14 0	....	208 14 0	....	Ditto.
Shaikh Sulaman (291 of 1925)	102 0 0	....	56 0 1	45 15 11	....	45 15 11	....	Ditto.
Sri Lall Hanumanbuksh (59 of 1926) ..	372 12 0	....	75 5 9	297 6 3	....	297 6 3	....	Ditto.
Shamji Gokul Das (229 of 1926) ..	3,678 0 0	2,544 4 10	998 13 1	134 14 1	....	134 14 1	....	Ditto.
Sewlall Sankari Lall	550 0 0	102 15 5	....	447 0 7	....	447 0 7	....	Ditto.
Santram Vedera (Mehta & Co.) ..	5,247 3 9	3,792 2 4	1,056 15 8	398 1 9	....	340 14 8	57 3 1	Ditto.
							No. 2.	
Satish Chunder Saha (48 of 1927) ..	4,521 13 0	2,660 2 1	405 7 2	1,456 3 9	708 11 9	747 8 0	....	Ditto.
Sarkar & Sarkar (47 of 1927)	2,977 8 9	224 5 0	844 4 3	1,908 15 6	89 10 6	1,819 5 0	....	Ditto.
Sakoilsky, Madame Marie (107 of 1927) ..	1,344 0 6	82 5 7	390 11 3	870 15 8	....	314 5 4	556 10 4	Ditto.
							No. 2.	
Sisir Kumar Bhandury (150 of 1927) ..	50 0 0	....	2 8 0	47 8 0	....	47 8 0	....	Ditto.
Sital Chunder Tat and Girija Bhusan Pal ..	80 0 0	....	74 11 0	5 5 0	....	5 5 0	....	Ditto.
Sisir Kumar Mitter (163 of 1927) ..	459 2 0	....	207 11 2	251 6 10	....	251 6 10	....	Ditto.
Sova Chand and others (Sova Chand Khub Chand).	2,866 8 7	293 5 4	1,051 7 0	1,521 12 3	....	1,521 12 3	....	Ditto.
Sudhir Kumar Bose (4 of 1928) ..	230 0 0	....	72 6 0	157 10 0	....	157 10 0	....	Ditto.
Sarat Chunder Pal (224 of 1927) ..	8,168 6 9	6,631 6 5	891 4 10	645 11 6	396 13 3	248 14 3	....	Ditto.
Sweeney, Hugh Edward Aloysius (226 of 1927).	724 12 0	463 2 1	122 13 1	138 12 10	....	138 12 10	....	Ditto.
Surendra Nath Mitter	1,647 11 0	450 15 9	132 14 1	1,063 13 2	3 2 0 Debit balance.	1,066 15 2	....	Ditto.
Simpson, Harry James (35 of 1928) ..	614 8 5	....	305 0 2	309 8 3	....	309 8 3	....	Ditto.
Satis Chunder Dey (56 of 1928) ..	275 10 0	....	62 11 6	212 14 6	....	212 14 6	....	Ditto.
Sewnarain Agarwalla (118 of 1928) ..	418 2 0	261 15 3	40 1 8	116 1 1	....	116 1 1	....	Ditto.
Syed Jewad Hossain (222 of 1928) ..	249 0 0	....	65 11 2	183 4 10	....	183 4 10	....	Ditto.
Sew Protap Rathi	131 7 1	....	89 5 4	42 1 9	....	42 1 9	....	Ditto.
Srinath Bazaz and Mohadeo Prosad Poddar (236 of 1928)	3,130 3 10	32 0 0	1,065 14 7	2,032 5 3	519 0 6	1,513 4 9	....	Ditto.
Sant Sing	78 10 0	....	37 11 4	40 14 8	....	40 14 8	....	Ditto.
Simpson, William James (73 of 1929) ..	133 8 6	....	81 2 9	52 5 9	....	52 5 9	....	Ditto.
Satya Charan Dhur known as S. C. Dhur (90 of 1929).	460 0 0	93 6 5	261 1 0	105 8 7	51 12 6	53 12 1	....	Ditto.
Sukumar Pakrasi (95 of 1929)	191 15 3	....	112 1 6	79 13 9	....	79 13 9	....	Ditto.
Simpson, Katherine, Mrs. (120 of 1929) ..	190 0 0	48 0 3	94 4 0	47 11 9	....	47 11 9	....	Ditto.
Sailendra Nath Mitter (135 of 1929) ..	155 3 0	....	78 11 11	76 7 1	....	76 7 1	....	Ditto.
Sohun Lall and Surajratan Singhee (163 of 1929).	94 10 0	16 3 2	38 2 3	40 4 7	33 14 5	6 6 2	....	Ditto.
Sagoremull Babua, Joy Doyal Babu *alias* Agarwalla.	50 0 0	....	23 7 0	26 9 0	....	26 9 0	....	Ditto.
Susilabala Dasi, Sm. (193 of 1929) ..	121 0 0	....	81 5 4	39 10 8	..	39 10 8	....	Ditto.
Sadhu Charan Mullick (219 of 1929) ..	6,744 7 9	151 13 3	950 12 1	5,641 14 5	4,258 7 3	1,383 7 2	....	Ditto.
Seth, Ronald Bertram (53 of 1930) ..	460 5 0	....	62 10 0	397 11 0	....	397 11 0	....	Ditto.
Sree Krishna Roy (69 of 1930) ..	50 0 0	....	39 5 8	10 10 4	....	10 10 4	....	Ditto.
Surendra Nath Pal (84 of 1930) ..	142 8 0	....	101 8 9	40 15 3	....	40 15 3	....	Ditto.
Sambhu Nath Misser (85 of 1930) ..	75 0 0	....	44 6 2	30 9 10	....	30 9 10	....	Ditto.
Seeshu Kumar Mukherjee (90 of 1930) ..	614 10 0	19 0 9	244 13 8	350 11 7	292 0 0	58 11 7	....	Ditto.
Sri Kissen Bajpai (119 of 1930) ..	50 0 0	....	40 6 9	9 9 3	....	9 9 3	....	Ditto.
Skinner, Francis William Booth (108 of 1930)	300 8 0	74 9 0	104 11 8	121 3 4	93 4 4	27 15 0	....	Ditto.

Estates.	Whole amount of receipts.	Whole disbursements.		Balance.	Portion of balance applicable to dividends now payable.	Net balance.	Transfers to unclaimed dividend account under rule 175 and section 122 of the P. T. I. Act of 1909.	Probable outturn of the dependencies.
		Dividends paid.	Other payments.					
	Rs. a. p.	Rs. a. p.	Rs. a. p.	Rs. a. p.	Rs. a. p.	Rs. a. p.	Rs. a. p.	
Sumermull Surana and another ..	9,293 14 8	....	9,254 14 5	39 0 3	....	39 0 3	....	Outstanding in course of recovery.
Sree Chand Banthia (171 of 1930) ..	1,018 2 0	....	461 13 3	556 4 9	....	556 4 9	....	Ditto.
Sewratan Rathi and Gangabissen Rathi (196 of 1930).	1,877 13 9	....	278 2 0	1,599 11 9	....	1,599 11 9	....	Ditto.
Shaik Mahamed Eshaq Ali and Shaik Abdul Baser (206 of 1930)	300 0 0	....	79 3 1	220 12 11	....	220 12 11	....	Ditto.
Shea, Cecil Joseph Emma (222 of 1930) ..	53 0 0	....	51 8 3	1 7 9	....	1 7 9	....	Ditto.
Shaik Rahaman Kasai (1 of 1931) ..	50 0 0	....	31 13 0	18 3 0	....	18 3 0	....	Ditto.
Shibamull Agarwalla (11 of 1931) ..	50 1 0	....	46 10 3	3 6 9	....	3 6 9	....	Ditto.
Surendra Nath Pal	62 13 0	....	47 3 3	15 9 9	....	15 9 9	....	Ditto.
Sailendra Lall Sirkar	1,660 1 0	....	298 13 5	1,361 3 7	....	1,361 3 7	....	Ditto.
Sabbage, Norman Frederick Hooper (37 of 1931).	70 0 0	....	46 5 0	23 11 0	....	23 11 0	....	Ditto.
Surita, Osborne Ebrington (47 of 1931) ..	50 0 0	....	47 4 0	2 12 0	....	2 12 0	....	Ditto.
Swami Deyal (57 of 1931)	101 8 0	....	41 1 2	60 6 10	....	60 6 10	....	Ditto.
Surja Prosad and Sewnath Sing (61 of 1931)	118 5 9	....	34 5 7	84 0 2	....	84 0 2	....	Ditto.
Sailendra Nath Sen (71 of 1931) ..	122 4 3	....	60 15 9	61 4 6	....	61 4 6	....	Ditto.
Simmans, Ailien Dorothy (87 of 1931) ..	50 0 0	....	42 9 0	7 7 0	....	7 7 0	....	Ditto.
Sriram Saha (152 of 1931)	50 0 0	....	20 4 0	29 12 0	....	29 12 0	....	Ditto.
Senballe Lian Victor (116 of 1931) ..	336 1 3	....	61 6 9	274 9 6	....	274 9 6	....	Ditto.
Samiruddin Ahmed (130 of 1931) ..	170 0 0	....	51 14 0	118 2 0	....	118 2 0	....	Ditto.
Subramania Rama Ayar (129 of 1931) ..	1,242 11 0	....	150 4 1	1,092 6 11	....	1,092 6 11	....	Ditto.
Schwegber, Robert Alfred (135 of 1931) ..	2,298 8 9	341 12 0	879 1 1	1,077 11 8	175 10 0	902 1 8	....	Ditto.
Subal Chandra Dawn (144 of 1931) ..	55 0 0	....	49 13 0	5 3 0	....	5 3 0	....	Ditto.
Saheb Dayal Khanna (158 of 1931) ..	50 0 0	....	38 4 0	11 12 0	....	11 12 0	....	Ditto.
Shand Keith Sandford (207 of 1931) ..	50 9 0	....	42 13 0	7 12 0	....	7 12 0	....	Ditto.
Subodh Kumar Lahiry (12 of 1932) ..	50 0 0	....	27 10 9	22 5 3	....	22 5 3	....	Ditto.
Simpson, Leonard Charles (17 of 1932) ..	50 0 0	....	50 11 6	0 11 6 Dr. balance.	....	0 11 6 Dr. balance.	....	Ditto.
Swaries Arthur Macdonalds	175 0 0	139 7 4	31 13 6	3 11 2	....	....	E. B.— 3 11 2 39 15 4	Ditto.
							No. 3.	
Satish Chundra Chatterjee	200 0 0	....	107 10 0	92 6 0	....	92 6 0	....	Ditto.
Sarat Chundra Sanyal	16,419 10 0	14,394 4 6	1,799 2 5	226 3 1	197 4 8	28 14 5	....	Ditto.
Sochindra Nath Roy (22 of 1932) ..	50 0 0	....	45 6 6	4 9 6	....	4 9 6	....	Ditto.
Sorabjee, D. P., Mrs. (28 of 1932) ..	83 3 7	....	51 12 6	31 7 1	....	31 7 1	....	Ditto.
Samuell, Louise (34 of 1932)	50 0 0	....	44 8 9	5 7 3	....	5 7 3	....	Ditto.
Sova Chand Borar (45 of 1932) ..	50 0 0	....	40 1 6	9 14 6	....	9 14 6	....	Ditto.
Shave, Desmond Daniel (49 of 1932) ..	1,850 0 0	....	161 13 0	1,688 3 0	....	1,688 3 0	....	Ditto.
Starling, Patrick Joseph (51 of 1932) ..	50 0 0	....	45 8 6	4 7 6	....	4 7 6	....	Ditto.
Surja Kumar Dutt (57 of 1932) ..	51 0 0	....	41 11 0	9 5 0	....	9 5 0	....	Ditto.

Stephen, Fredrick Stanley (74 of 1932) ..	50 0 0	....	48 13 9	1 2 3	....	1 2 3	....	Ditto.
Sukhlall (80 of 1932)	392 0 0	....	112 5 9	279 10 3	....	279 10 3	....	Ditto.
Sachindraprosad Bose (72 of 1932) ..	50 0 0	....	26 9 3	23 6 9	....	23 6 9	....	Ditto.
Surendra Nath Dey (87 of 1932) ..	286 14 3	....	119 6 10	167 7 5	....	167 7 5	....	Ditto.
Sudhir Kumar Chowdhury (84 of 1932) ..	50 0 0	....	46 0 3	3 15 9	....	3 15 9	....	Ditto.
Shrubsole, Claude Idwal Bedolfe (91 of of 1932) (113 of 1932).	50 0 0	....	38 11 6	11 4 6	....	11 4 6	....	Ditto.
Surajmull Ramprotap Mohadeomull and Sagoremull.	50 0 0	....	38 2 6	11 13 6	....	11 13 6	....	Ditto.
Shamsuddin Khoja Worah (127 of 1932) ..	50 0 0	....	11 11 3	38 4 9	....	38 4 9	....	Ditto.
Scott, George Gill (109 of 1932) ..	50 0 0	....	40 11 9	9 4 3	....	9 4 3	....	Ditto.
Strand, Alfred Arthur (112 of 1932) ..	50 0 0	....	42 15 0	7 1 0	....	7 1 0	....	Ditto.
Syed Mohamed Shoosthey (134 of 1932) ..	50 0 0	....	9 8 0	40 8 0	....	40 8 0	....	Ditto.
Serroo, Joseph Rach (123 of 1932) ..	50 0 0	....	40 7 9	9 8 3	....	9 8 3	....	Ditto.
Surjee Prosad Panday (143 of 1932) ..	50 0 0	....	12 8 0	37 8 0	....	37 8 0	....	Ditto.
Smith, James Sanko (149 of 1932) ..	50 0 0	....	....	50 0 0	....	50 0 0	....	Ditto.
Tulsiram Jalan	9,697 8 3	6,432 12 7	914 15 6	2,349 12 2	....	2,349 12 2	2,635 14 11	Nothing further recoverable.
							No. 3.	
Tarruck Bundhu Bhattacharjee ..	8,811 13 6	3,111 5 2	4,602 7 7	1,098 0 9	....	1,053 13 3	E. B.— 44 3 6 828 4 3	Ditto.
							No. 3.	
Taruck Das Dhur	9,423 4 6	3,099 4 6	4,102 4 5	2,221 11 7	....	1,033 8 2	1,188 3 5	Ditto.
							No. 2.	
Tappissier, Eugene H. A.	474 10 6	....	95 8 8	379 1 10	....	379 1 10	....	Ditto.
Teasdale, T. W.	1,100 0 0	509 13 3	85 14 0	504 4 9	....	82 9 5	421 11 4	Ditto.
							No. 2.	
Trijogy Nath Dobey	5,218 9 6	1,275 3 4	1,954 14 4	1,988 7 10	....	223 15 5	1,764 8 5	Ditto.
							No. 2.	
Turner, N. A.	1,617 9 0	1,280 8 8	211 0 0	126 0 4	....	126 0 4	60 6 5	Ditto.
							No. 3.	
Taherbhoy Mollah Tayabali	221 6 3	....	61 8 10	159 13 5	....	159 13 5	....	Ditto.
Thomas, Hugh	250 0 0	....	49 15 6	200 0 6	....	200 0 0	....	Ditto.
Taresh Chunder Ghose	2,020 8 9	427 14 8	868 11 1	723 15 0	....	189 9 11	534 5 1	Ditto.
							No. 2.	
Tara Prosanna Pramanick	5,535 12 0	556 12 5	627 2 10	4,351 12 9	84 3 7	4,267 9 2	....	Ditto.
Tristam, James Samuel (Monteith and Co.) (205 of 1923).	17,735 11 3	12,065 7 0	4,508 15 2	1,161 5 1	75 0 0	916 11 4	169 9 9	Ditto.
							No. 2.	
Tinsley, W. H. (147 of 1925)	950 0 0	580 3 1	122 0 0	247 12 11	....	44 12 3	203 0 8	Ditto.
							No. 2.	
Thakursi Das Agarwalla (108 of 1928) ..	50 0 0	....	22 3 3	27 12 9	....	27 12 9	....	Ditto.
Tobias, William Samuel (11 of 1929) ..	140 4 0	....	56 3 1	84 0 11	....	84 0 11	....	Ditto.

Estates.	Whole amount of receipts.	Whole disbursements.		Balance.	Portion of balance applicable to dividends now payable.	Net balance.	Transfers to unclaimed dividend account under rule 175 and section 122 of the P. T. I. Act of 1909.	Probable outturn of the dependencies.
		Dividends paid.	Other payments.					
	Rs. a. p.	Rs. a. p.	Rs. a. p.	Rs. a. p.	Rs. a. p.	Rs. a. p.	Rs. a. p.	
Turner, Victor Oswald (29 of 1929) ..	50 0 0	....	37 5 10	12 10 2	....	12 10 2	....	Nothing further recoverable.
Teikaram (92 of 1929)	50 0 0	....	25 4 10	24 11 2	....	24 11 2	....	Ditto.
Tulsi Das Kisen Dayal	3,957 15 6	....	2,543 3 11	1,414 11 7	....	1,414 11 7	....	Ditto.
Tellore, Roghova Kuchapeswar Aiyar (41 of 1931).	800 1 0	....	97 4 8	702 12 4	....	702 12 4	....	Ditto.
Teck Chand (167 of 1921)	26 8 0	....	1 1 11	25 6 1	....	25 6 1	....	Ditto.
Thornton, James Edward	50 0 0	....	44 7 0	5 9 0	....	5 9 0	....	Ditto.
Tarit Mohun Bysack (279 of 1931) ..	50 0 0	....	42 9 0	7 7 0	....	7 7 0	....	Outstanding in course of recovery.
Tansuk Lal Serowgie	75 0 0	....	32 1 0	42 15 0	....	42 15 0	....	Ditto.
Tincowry Bysack and Dulall Chand Bysack (97 of 1932).	54 1 6	....	33 9. 6	20 8 0	....	20 8 0	....	Ditto.
Tulsi Churun Kumar, *alias* T. C. Coomar ..	273 0 0	....	86 8 11	186 7 1	....	186 7 1	....	Ditto.
Thakurdass Agyaram	75 0 0	....	....	75 0 0	....	75 0 0	....	Ditto.
Thurstan, Edith Janey Lloyd (89 of 1926)..	6,575 5 1	6,055 12 10	442 0 0	77 8 3	....	....	64 9 9	Ditto.
							No. 2. E. B.— 12 14 6	
Upendra Nath Dutt (135 of 1916) ..	3,845 15 3	2,632 15 10	219 15 1	993 0 4	....	42 0 0	951 0 4	Nothing further recoverable.
Upsan, Donald Goldin (74 of 1918) ..	935 0 0	685 0 10	115 10 5	134 4 9	....	71 0 1	No. 2. 63 4 8	Ditto.
							No. 2	
Udaynarain Rambrohmo (Iswar) and Sri Bejay Hari Roy.	11,085 7 0	....	8,802 12 4	2,282 10 8	....	2,282 10 8	....	Ditto.
Upendra Nath Bandopadhyaya ..	1,378 7 6	....	1,294 10 6	83 13 0	....	83 13 0	....	Ditto.
Upendra Nath Nundy (116 of 1923) ..	792 14 6	401 7 0	173 10 5	217 13 1	71 7 8	146 5 5	....	Ditto.
Uttam Chand Ashudamull (183 of 1926) ..	8,226 11 9	6,487 1 4	922 8 6	817 1 11	544 6 8	225 12 9	45 14 6	Ditto.
							No. 2.	
Unger, Valentine Carl Whybrow (134 of 1931).	530 0 0	....	78 13 11	451 2 1	....	451 2 1	....	Ditto.
Ugar Sen (firm Krishna and Kailas) (156 of 1930).	50 0 0	....	42 8 8	7 7 4	....	7 7 4	....	Ditto.
Upendra Nath Koer & Bros.	75 0 0	....	47 3 0	27 13 0	....	27 13 0	....	Ditto.
Uttam Chand Asudamull (182 of 1931) ..	874 13 0	....	241 11 3	633 1 9	....	633 1 9	....	Ditto.
Unger, Andrew Henry (237 of 1931) ..	52 5 6	....	52 5 9	0 0 3	....	0 0 3	....	Ditto.
Upendra Nath Kar (249 of 1931) ..	395 2 8	....	123 5 0	Dr. balance. 271 13 8	....	Dr. balance. 271 13 8	....	Ditto.
Upendra Samola and Sulova Samola ..	75 0 0	....	....	75 0 0	....	75 0 0	....	Ditto.

Upenpra Nath Sen (131 of 1932) ..	175 0 0	....	20 14 0	154 2 0	....	154 2 0	....	Ditto.
Veljee Jetha	633 8 11	....	63 14 2	569 10 9	....	569 10 9	....	Ditto.
Vanspall, Maurice George Christian (88 of 1926).	2,538 0 0	1,568 1 7	323 2 4	641 12 1	....	120 7 8	521 4 5	Ditto.
							No. 2.	
Vincent, Clive Lawrentine (202 of 1927) ..	1,531 3 0	1,092 0 1	165 10 7	273 8 4	161 8 5	111 15 11	....	Ditto.
Victor, George Nelson (126 of 1930) ..	50 12 0	....	44 15 0	5 13 0	....	5 13 0	....	Ditto.
Veda, Joseph Phillips (213 of 1931) ..	50 8 0	....	40 0 0	10 8 0	....	10 8 0	....	Ditto.
Vieyra, Percival Robert (250 of 1931) ..	50 0 0	....	46 9 0	3 7 0	....	3 7 0	....	Ditto.
Vickney, Lawrence (24 of 1932) ..	50 0 0	....	43 2 0	6 14 0	....	16 14 0	....	Ditto.
Warman & Co.	3,51,895 4 4	1,95,505 14 10	1,49,407 12 8	6,981 8 10	....	678 3 0	6,303 5 10	Ditto.
							No. 2.	
Wilkinson, H. R.	15,761 15 9	10,109 10 1	2,028 2 0	3,624 3 8	....	1,715 7 8	1,908 12 0	Ditto.
							No. 2.	
							E. B.—	
Woomesh Chandra Chowdhury ..	300 0 0	189 0 4	92 10 0	18 5 8	....	....	18 5 8	Ditto.
							55 12 1	
							No. 3.	
Wood, Henry	660 0 0	176 4 0	66 13 6	416 14 6	....	....	398 7 5	Ditto.
							No. 2.	
							E. B.—	
							18 7 1	
Wittenbaker, T. A. W. (73 of 1919) ..	850 0 0	550 5 5	127 14 0	171 12 7	....	70 14 3	100 14 4	Ditto.
							No. 2.	
Waymark, A. E.	2,614 5 0	1,752 1 3	273 14 8	588 5 1	489 12 8	19 13 5	78 11 0	Ditto.
							No. 2.	
Weir, W. R.	1,874 4 0	....	314 1 6	1,560 2 6	....	1,560 2 6	....	Ditto.
White, Garnett Hyne (227 of 1923) ..	1,333 13 0	637 7 10	220 3 6	476 1 8	....	291 4 2	184 13 6	Ditto.
							No. 2.	
Watts, Andrew Banchand (192 of 1924) ..	540 4 0	246 12 2	71 11 6	221 12 4	....	221 12 4	....	Ditto.
Wallace, R., Mrs. (239 of 1934) ..	23,311 0 9	5,441 15 4	16,827 12 8	1,041 4 9	1,029 4 9	12 0 0	....	Ditto.
Walli Mahamed Kasim (95 of 1925) ..	228 13 6	....	67 12 0	161 1 6	....	161 1 6	....	Ditto.
Whitehead, H. E. (35 of 1926) ..	69 14 6	....	50 3 4	19 11 2	....	19 11 2	....	Ditto.
Waite, Harold Niven St. John Outh (128 of 1928).	4,578 1 3	149 15 2	3,913 10 0	514 8 1	361 9 7	152 14 6	....	Ditto.
Wakefane, Charles (106 of 1929) ..	149 4 0	....	77 9 10	71 10 2	....	71 10 2	....	Ditto.
Widgery, James (173 of 1930)	485 0 0	....	74 5 8	410 10 4	....	410 10 4	....	Ditto.
Wyer, Dermoth Egan (97 of 1931) ..	50 0 0	....	43 1 0	6 15 0	....	6 15 0	....	Ditto.
Wardsworth, Ralph Dudley (112 of 1931) ..	52 0 0	....	51 12 0	2 4 0	....	2 4 0	....	Ditto.
Wall, John Sydney (138 of 1931) ..	4,876 11 8	....	4,464 6 6	412 5 2	....	412 5 2	....	Ditto.
Wamanrao, K. Ajinkya (209 of 1931) ..	427 7 11	....	70 13 5	356 10 6	....	356 10 6	....	Ditto.
Walsh, Knok Patrick (227 of 1931) ..	450 0 0	....	67 8 3	382 7 9	....	382 7 9	....	Ditto.
Walli Mohamed Mehdi Hossain (278 of 1931)	50 0 0	....	25 14 6	24 1 6	....	24 1 6	....	Ditto.
Watson, Arthur Patrick	50 0 0	....	40 10 0	9 6 0	....	9 6 0	....	Ditto.

Estates.	Whole amount of receipts.	Whole disbursements.		Balance.	Portion of balance applicable to dividends now payable.	Net balance.	Transfers to unclaimed dividend account under rule 175 and section 122 of the P. T. I. Act of 1909.	Probable outturn of the dependencies.
		Dividends paid.	Other payments.					
	Rs. a. p.	Rs. a. p.	Rs. a. p.	Rs. a. p.	Rs. a. p.	Rs. a. p.	Rs. a. p.	
Young, John Joseph (121 of 1928) ..	4,451 8 0	3,209 9 1	326 0 0	915 14 11	689 7 0	3 7 4	223 0 7	Nothing further recoverable.
							No. 2.	
Young, Henry Horatio	290 0 0	202 9 8	21 13 11	65 8 5	....	....	E. B.— 65 8 5 94 5 8	Ditto.
							No. 3.	
Yacoob Musaji Salaji (152 of 1932) ..	50 0 0	....	....	50 0 0	....	50 0 0	....	Ditto.
Zeul Huq (125 of 1925)	294 10 0	....	85 5 5	209 4 7	....	209 4 7	....	Ditto.

In addition to the above there are 669 estates with balances under Rs. 500 aggregating Rs. 1,19,695-12-2 the particulars of which may be learnt at this office. The Official Assignee has received for remuneration for the half year ending 31st July 1932, Rs. 13,410.

Prepared by

PITAMBAR BANERJEE,
Head Clerk, Bill Department.

Examined by

GIRIJA KUMAR BASU,
Auditor.

B. N. CHAUDHURI,
Assistant Examiner, Local Accounts, Bengal.

B. C. DUTT,
Examiner, Local Accounts, Bengal.

G. M. FALKNER,
Official Assignee, Calcutta.

Calcutta, the 10th September 1933.

(2693—1)

FORM No. 27.

Advertisement of sale.

NOTICE is hereby given that the undermentioned plots of land no longer required by Government, situated along the Eastern Bengal Railway in the district of Bogra, will be put up to sale at 12 noon on the 8th March 1935 corresponding with the Fasli at 24th Falgoon, 1341 B.S.

The purchasers of the several plots of land will be subject to the following conditions :—

1st.—The purchasers will have no power to make any excavations on the land nearer than fifteen feet from the railway boundary or to plough the land nearer than three feet from the same.

2nd.—If the amount of purchase money does not exceed Rs. 100 the whole amount must be paid down at once.

3rd.—If the amount of purchase money exceeds Rs. 100, one-fourth of the amount must be immediately deposited. If the balance be not paid by noon of the fifteenth day after the sale, reckoning the day of sale as one, or if that day be a close holiday, then by the noon of the first succeeding office day, the sale shall be cancelled, the sum deposited being forfeited to Government and the lot again put up for sale at the risk of the defaulting purchaser, after issuing of advertisement, as in the case of original sale.

4th.—The plots of land will be sold subject to an annual assessment of Rs. 45 for a term of 15 years as a temporarily-settled estate to the highest bidders.

5th.—The sale will become final on receipt by the Collector of the orders of the Commissioner confirming it and a regular conveyance will then be granted to the purchaser.

Consecutive lot number.	Name of district.	Pargana and mauza.	Number of mile on which land is situated.	Situated on which side of the railway.	Approximate area of lot in acres and decimals.	Land excluded from sale from each lot.		Commencement and termination of lot.	Boundary of lot.
						Reasons for exclusion.	Acres and decimals.		
1	2	3	4	5	6	7	8	9	10
I	Bogra ..	Pargana Khatta, village Dhulatore (Chhatingram).	55	Eastern side ..	11·34	..	..	I to III	North.—Railway land settlement plot No. 2907. East.—Chhatingram village. South.—Lot No. II. West.—Railway land.
II	Do. ..	Ditto ..	55	Do. ..	33·24	..	..	..	North.—Lot No. I and mauza Chhatingram. East.—Chhatingram and Lot No. III. South.—Chhatingram. West.—Railway land.
III	Do. ..	Pargana Khatta, mauzas Nimaldighi and Chhatingram.	55	Do. ..	15·05	..	..	..	North, South and East.—Villages Chhatingram and Nimaldighi. West.—Lot No. II.
				Total	59·63	..	..	..	

Bogra, the 29th December 1934.

[ILLEGIBLE], *for* Collector.

CERTIFICATE CASE No. 1104 of 1933-34.

Place—Settlement Office, Malda.

Demand—Rs. 165-7-3.

Date of sale—11th February 1935, at 12 noon.

Certificate-holder—State Secretary.

Certificate-debtors—(1) Tarangini Dashi, wife of Ramani Mohan Ghosh, (2) Naresh Chandra Shingha, son of Nitai Sunder Shingha, present address Bahadurganj, police-station Bholahat, trustee of late Krishna Kamini Dashi.

Details of property.

Police-station Bholahat, district Malda.

Name of mauza with J. L. No.	Khatian No.	Shares.	Area.	Status.	Tauzi No.
		As.			
1. Jhaubona, 16	1	8	65·07	Zamindari ..	146
2. Gohalbari, 21	32	8	1,195·33	Do. ..	146
3. Bilbhatia, 4	85	8	2,963·09	Do. ..	146
4. Khanealam, 22	1	8	845·07	Do. ..	146
5. Radhanagar, 19	1	8	159·23	Do. ..	146
6. Joydebpur, 5	1	8	158·64	Do. ..	146
7. Bhaganbari, 26	135	8	1·20	Do. ..	146

H. L. DAS GUPTA, Assistant Settlement Officer-in-charge.

Malda, the 12th January 1935.

CERTIFICATE CASE No. 1154 OF 1933-34.

Place—Settlement Office, Malda.

Demand—Rs. 255-11-6.

Date of sale—11th February 1935, at 12 noon.

Certificate-holder—State Secretary.

Certificate-debtor—Kumar Krishna Ghosh, trustee of late Krishna Kamini Dashi, present address Bahadurganj police-station Bholahat.

Details of property.

Police-station Bholahat, district Malda.

Name of mauza with J. L. No.	Khatian No.	Shares.	Area.	Status.	Tauzi No.
		As.			
1. Jhaubona, 16	1	8	65·07	Zamindari ..	146
2. Gohalbari, 21	32	8	1,195·33	Do. ..	146
3. Bilbhatia, 4	85	8	2,963·09	Do. ..	146
4. Khanealam, 22	1	8	845·07	Do. ..	146
5. Radhanagar, 19	1	8	159·23	Do. ..	146
6. Joydebpur, 5	1	8	158·64	Do. ..	146
7. Bhaganbari, 26	135	8	1·20	Do. ..	146

H. L. DAS GUPTA, Assistant Settlement Officer-in-charge.

Malda, the 12th January 1935.

CERTIFICATE CASE No. 161 OF 1934-35.

Place - Settlement Office, Malda.

Demand— Rs. 63-8.

Date of sale—11th February 1935, at 12 noon.

Certificate-holder—State Secretary.

Certificate-debtor—Kisari Chaudhurany, wife of Badrika Nath Ghosh, village Nowda, post office Araidanga, police-station Ratua, district Malda.

Details of properties.

Thana Ratua, district Malda.

Name of mahal.	Tauzi No.	Khatian No.	Area.	Share.	Revenue.	Name of mauza and J. L. No.
				As.	Rs. a. p.	
1. Zamindary Hossainpur	87	22/গ	27·79	4	1,329 8 0	Khutáhá, 141.
2 Ditto ..	87	15/গ	80·60	4	1,329 8 0	Nizgaon Aráidángá, 132.

Malda, the 12th January 1935. H. L. DAS GUPTA, Assistant Settlement Officer-in-charge.

CERTIFICATE CASE No. 163 OF 1934-35.

Place—Settlement Office, Malda.

Total amount due—Rs. 57-11-6.

Date of sale—11th February 1935, at 12 noon.

Certificate-holder—State Secretary.

Certificate-debtor—Jogendra Narayan Chowdhury, son of Behari Lal Chowdhury, of Naoda, police-station Ratua, district Malda.

Details of properties.

Thana Ratua, district Malda.

Name of mahal.	Tauzi No.	Khatian No.	Area.	Share.	Revenue.	Name of mauza and J. L. No.
				As.	Rs. a. p.	
1. Zamindary Hossainpur	87	22(kha)	27·78	4	1,329 8 0	Khutáhá, 141.
2. Ditto ..	87	15(kha)	80·60	4	1,329 8 0	Nizgaon Aráidángá, 132.

Malda, the 12th January 1935. H. L. DAS GUPTA, Assistant Settlement Officer-in-charge.

Certificate Department, Jessore Collectorate, Jessore District.

Place of sale—In the Court of the Certificate Officer, Jessore.

Date and hour of sale—20th February 1935, at 12 noon.

Statement of Certificate Sales.

No. and year of certificate.	Name of the certificate-holder.	Name of certificate-debtors.	Demand.	Particulars of property to be sold.
			Rs. a. p.	
628(x) of 31-32	Secretary of State for India in Council.	(1) Giribala Debi, wife of Hara Chandra Mazoomdar, of Pangsa, police-station Pangsa, district Faridpur, c-o Babu Aswini K. Mitra, Deputy Magistrate, Midnapore. (2) Hemanta Bala Debi, wife of Abhoy Charan Mazoomdar, of Pangsa, police-station Pangsa, district Faridpur. (3) Pramila Bala Debi, wife of Satish Chandra Das, of Bishoi Showrail, police-station Pangsa, district Faridpur. (4) Rai Purna Chandra Lahiri Bahadur and Hem Chandra Lahiri of Narail, police-station Narail,- at present, 52, Police Hospital Road, Calcutta. (5) Secretary, Faridpur Loan Office, Limited, Faridpur town.	6,192 4 9	T. No. 5578/0, Zamindari Bhar-Fatejangpur, pargana Bhar-Fatejangpur, police-station Sailkupa, land revenue Rs. 3,294-11-8.

Jessore, the 9th January 1935. [ILLEGIBLE], Certificate Officer.

In the 1st Court of the Sub-Judge of Pabna.

MONEY EXECUTION CASE No. 30 OF 1934.

Sashi Bhusan Bhoumik

versus

Jitendra Krishna Singh and others.

ALL that 4½ annas share of the defendant's zamindary right in the tauzi No. 104/Ej. of Pabna Collectorate, pargana Islampur, including the Jalkar Gangapath Padmanadi, the proportionate revenue payable being Rs. 6,841-14-6 and Police Rs. 76-3-10 valued at about Rs. 18,000 will be sold at 12 noon on the 18th February 1935.

K. B. SEN, Sub-Judge.

Pabna, the 22nd December 1934. (63—1)

In the 1st Court of the Sub-Judge of Pabna.

RENT (MONEY) EXECUTION CASE No. 2 OF 1934.

Meghendra Narayan Singha

versus

Sourindra Krishna Singha and others.

ALL the three annas share of tauzi No. 104 Ejmali of Pabna Collectorate, pargana Islampur, including Gangaptha Jalkar, the proportionate revenue payable in this three annas share being Rs. 4,561-6-11p., the value of the property being Rs. 12,000 as settled by Court, will be sold in execution of the above mentioned case at 12 noon on 18th February 1935 at Pabna by the 1st Sub-Judge of Pabna.

K. B. SEN, Sub-Judge.

Pabna, the 21st December 1934. (44—1)

In the Court of the Sub-Judge of Jessore.

RENT EXECUTION CASE No. 62 OF 1934.

Registered Jessore Loan Company, Limited, Jessore, decree-holder,

versus

Sreemati Rani Kanakprova Debi, executrix of estate Kumar Khirode Kantha Roy of Chanchra, police-station Kotwali, district Jessore, judgment-debtor.

THE following immovable properties of the judgment-debtor will be sold at auction sale at 12 noon on the 21st day of January 1935 by the Nazir of the Court in the abovementioned execution case for the realisation of the decretal amount and cost amounting to Rs. 16,102-11-3 p. under the Rent Decree No. 21 of 1932 of the Sub-Judge's Court, Jessore :—

Schedule of property.

1. Whatever right, title and interest the judgment-debtor has in sixteen annas share in tauzi No. 5533 of the Jessore Collectorate, mahals zamindary Bhojeganti, Barandi and others in pargana Emadpur, within the jurisdiction of police-stations Kotwali and Manirampur, bearing an annual revenue of Rs. 761-14-6p. only. Approximate value Rs. 300.

2. Whatever right, title and interest the judgment-debtor has in ten annas thirteen gandas one kara and one kranti share in tauzi No. 158 of the Khulna Collectorate, mahal Bajeapati taluk kismat Mulgram zamindary, within the jurisdiction of police-stations Jhinkargachia, Kotwali, Manirampur, Nawapara and Chougacha of district Jessore and police-stations Dumuria and Paikgacha of the district of Khulna, bearing an annual revenue of Rs. 1,548-13. Approximate value Rs. 300 only.

3-4. Whatever right, title and interest the judgment-debtor has in sixteen annas share in mourashi jama of Rs. 2,992-10-8p. under Kumar Jyotish Kanta Roy within the jurisdiction of police-station Kotwali, mahal mauza Vekutia and others, pargana Emadpur, district Jessore. Approximate value Rs. 50 only.

4-7. Whatever right, title and interest the judgment-debtor has in sixteen annas share in tauzi No. 5534 of the Jessore Collectorate, mahal zamindary Emadpur Chhaham, within the jurisdiction of police-stations Kotwali and Manirampur, bearing an annual revenue of Rs. 885-3. Approximate value Rs. 200 only.

GAJANON BANERJEE, Sub-Judge.

Jessore, the 22nd December 1934. (65—1)

In the High Court of Judicature at Fort William in Bengal, in Insolvency.

NOTICE OF ADJUDICATION ORDER.

No. 76 of 1934.

Re Ashutosh Roy Chowdhury, Manindra Mohun Roy Chowdhury, Jogendra Mohun Roy Chowdhury and Bhabendra Mohun Roy Chowdhury, all residing and lately carrying on business in co-partnership under the name and style of Issur Gokul Chandra Ananda Chandra Roy Chowdhury at No. 45, Balaram Majumdar Street, in the town of Calcutta. *Ex parte* the creditor.

Raj Kumar Basu, creditor's solicitor.

ON the 5th day of December 1934, an order was made by the High Court of Judicature at Fort William in Bengal in its insolvency jurisdiction adjudging the abovenamed as insolvents.

Note.—All debts due to the estate should be paid to me.

Dated this 3rd day of January 1935.

G. M. FALKNER, Official Assignee.

In the High Court of Judicature at Fort William in Bengal, in insolvency.

NOTICE OF ADJUDICATION ORDER.

No. 147A of 1934.

Re Sitaram Ramawatar, a mercantile firm, lately carrying on business at No. 161, Upper Chitpore Road, Calcutta. *Ex parte* the creditors.

Khaitan & Co., creditor firm's solicitors.

R. K. Doy, Attorney.

ON the 27th day of November 1934, an order was made by the High Court of Judicature at Fort William in Bengal in its insolvency jurisdiction adjudging the abovenamed firm as an insolvent.

Note.—All debts due to the estate should be paid to me.

Dated this 3rd day of January 1935.

G. M. FALKNER, Official Assignee.

In the High Court of Judicature at Fort William in Bengal, in insolvency.

NOTICE OF ADJUDICATION ORDER.

No. 152 of 1934.

Re Basdeo Patodia, a service-holder of No. 22, Goenka Lane, in the town of Calcutta. *Ex parte* the creditor.

K. L. Dutt, creditor's solicitor.

P. D. Himatsingka & Co., debtor's solicitors.

ON the 19th day of November 1934, an order was made by the High Court of Judicature at Fort William in Bengal in its insolvency jurisdiction adjudging the abovenamed as an insolvent.

Note.—All debts due to the estate should be paid to me.

Dated this 3rd day of January 1935.

G. M. FALKNER, Official Assignee.

In the High Court of Judicature at Fort William in Bengal, in insolvency.

NOTICE OF ADJUDICATION ORDER.

No. 157 of 1934.

Re Sova Chand Golecha, Kundanmull Golecha and Chandanmull Golecha, lately carrying on business in co-partnership with Khub Chand Golecha, Dharam Chand Golecha and Hazarimull Bachawat under the name and style of Ratan Chand Punam Chand at No. 74, Cross Street, in the town of Calcutta, as dealers in jute and also as commission agents, all at present service-holders and residing at No. 198, Cross Street, in Calcutta aforesaid, *ex parte* the debtors.

P. D. Himatsingka & Co., debtors' solicitors.

ON the 20th day of December 1934, an order was made by the High Court of Judicature at Fort William in Bengal in its insolvency jurisdiction adjudging the abovenamed as insolvents.

Note.—All debts due to the estate should be paid to me.

Dated this 3rd day of January 1935.

G. M. FALKNER, Official Assignee.

NOTICE OF DATE FIXED FOR HEARING OF AN INSOLVENCY PETITION.

Section 10 of the Provincial Insolvency Act.

In the Court of the Sub-Judge at Asansol.

INSOLVENCY CASE No. 36 OF 1934.

Chiranjilal Jhunjhunwalla, creditor-applicant,

versus

Fulchand Saraf, Ramgopal Saraf and Bhajanlal Saraf, all carrying on business under the name and style of Udoy Ram Mannalal, debtors.

WHEREAS the abovenamed creditor has applied to this Court for an order declaring the abovenamed debtors insolvents, notice is hereby given to every one concerned that this Court has fixed the 18th January 1935, at 11 o'clock, for hearing the application. Parties concerned who desire to be represented in the matter should attend Court on the date and time fixed either in person or by duly instructed and authorised pleader.

K. BANERJEE, Sub-Judge.

Asansol, the 18th December 1934. (60—1)

NOTICE TO CREDITORS OF THE DATE OF HEARING OF AN INSOLVENCY PETITION.

Section 10 of the Provincial Insolvency Act, V of 1920.

In the Court of the District Judge at Chittagong.

INSOLVENCY APPLICATION No. 51 OF 1934.

WHEREAS Maulvi Abdul Mazid, son of Samiuddin, of Kutubjom, police-station Maheshkhali, South Division Cox's Bazar, has applied to this Court, by a petition, dated 7th day of December 1934, to be declared an insolvent under the Provincial Insolvency Act, V of 1920, this is to give notice that the Court has fixed the 21st day of January 1935 for the hearing of the aforesaid petition and the examination of the debtor.

E. S. SIMPSON, District Judge.

Chittagong, the 18th December 1934. (2873—1)

NOTICE TO CREDITORS OF APPLICATION FOR DISCHARGE.

Section 41 (*1*) of the Provincial Insolvency Act, V of 1920.

In the Court of the District Judge at Dacca.

INSOLVENCY CASE No. 23 OF 1932.

Broja Lall Shaha, son of late Govinda Chandra Shaha, resident of Joypura, police-station Dhamrai, district Dacca, insolvent.

TAKE notice that the abovenamed insolvent has applied at the Court for his discharge, and that the Court has fixed the 19th day of January 1935, at 10 o'clock, for hearing the application.

Dated this 20th day of December 1934.

A. N. SEN, District Judge.

(55—1)

In the Court of the Addl. District Judge of Howrah.

NOTICE is hereby given that the order adjudicating Ram Lal, guard, East Indian Railway, Howrah, in insolvency case No. 87 of 1931 has been annulled.

S. N. MODAK, Addl. District Judge.

Howrah, the 29th November 1934. (2866—1)

In the Court of the Additional District Judge of Hooghly at Howrah.

INSOLVENCY CASE No. 137 OF 1930.

NOTICE is hereby given that Panchkari Choudhury, son of late Dina Nath Choudhury, of Khuroot, Dharmatala, thana Shibpur, district Howrah, was on the 12th day of March 1934 adjudicated an insolvent, and directed to apply for final discharge within one year.

S. N. MODAK, Addl. District Judge.

Howrah, the 18th December 1934. (70—1)

In the Court of the Additional District Judge of Hooghly at Howrah.

NOTICE is hereby given under the Provincial Insolvency Act, V of 1920, to his creditors that the insolvency petition of Tulsi Charan Santra, son of late Fakir Chandra Santra, of 34, Gopal Banerjee Lane, thana Howrah, district Howrah, has been admitted by this Court as No. 242 of 1934 and that the 19th January 1935 has been fixed for the hearing thereof.

S. N. MODAK, Addl. District Judge.

Howrah, the 21st December 1934. (106—1)

In the Court of the Addl. Sub-Judge, Malda.

INSOLVENCY CASE No. 10 OF 1934.

NOTICE is hereby given under the Provincial Insolvency Act, V of 1920, to his creditors that the petition of Saikh Jahur, son of late Pora Saikh, of Pirajpur, police-station Englishbazar, district Malda, has been admitted by this Court and that 19th January 1935 has been fixed for hearing thereof.

T. N. ROY, Addl. Sub-Judge.

Malda, the 15th December 1934. (2861—1)

NOTICE TO CREDITORS OF THE DATE OF HEARING OF AN INSOLVENCY PETITION.

Section 19 of the Provincial Insolvency Act, V of 1920.

In the Court of the District Judge at Midnapore.

INSOLVENCY APPLICATION No. 100 OF 1934.

WHEREAS Rajani Kanta Das Mahapatra, son of late Jonmenjoy Das Mahapatra, of Maninathpore, pargana Pratapbhan, thana Pataehpore, district Midnapore, debtor-petitioner, has applied to this Court by a petition, dated 14th day of December 1934, to be declared an insolvent under the Provincial Insolvency Act, V of 1920, this is to give the creditors notice that the Court has fixed the 26th day of January 1935 for the hearing of the aforesaid petition and the examination of the debtor.

[ILLEGIBLE], District Judge.

Midnapore, the 3rd January 1935. (94—1)

In the Court of the District Judge of Noakhali.

INSOLVENCY CASE No. 7 OF 1933.

NOTICE is hereby given that Bhuban Mohan Das, son of late Ram Narayan Das, of Char Saha Vikari, police-station Sonagazi, district Noakhali, having applied for his final discharge, the 19th January 1935 has been fixed for hearing of the application.

H. C. SANYAL, *for* District Judge.

Noakhali, the 20th December 1934. (66—1)

In the Court of the District Judge of Noakhali.

INSOLVENCY CASE No. 8 OF 1933.

NOTICE is hereby given that Munshi Amzad Ali, son of late Aka Mia, of Char Fakira, police-station Companygunj, district Noakhali, having applied for his final discharge, the 19th January 1935 has been fixed for hearing of the application.

H. C. SANYAL, *for* District Judge.

Noakhali, the 20th December 1934. (67—1)

In the Court of the District Judge of Pabna and Bogra.

INSOLVENCY CASE No. 35 OF 1933.

NOTICE is hereby given that insolvent Gopal Chandra Sarkar, son of late Bhagbat Chandra Sarkar, of Shohagpur, police-station Belkuchi and district Pabna, has applied for his final discharge and the 18th January 1935 has been set down for hearing of the application.

B. K. BASU, District Judge.

Pabna, the 22nd December 1934. (64—1)

NOTICE TO CREDITORS OF THE DATE FIXED FOR HEARING OF AN INSOLVENCY PETITION.

Section 19 of the Provincial Insolvency Act, V of 1920.

In the Court of the District Judge of Birbhum at Suri.

INSOLVENCY APPLICATION No. 26 OF 1934.

WHEREAS Helaram Sadhu, son of late Atal Bihary Sadhu, of Purandarpur, thana and chauki Suri, district Birbhum, has applied to this Court by a petition, dated the 26th November 1934, to be declared an insolvent under the Provincial Insolvency Act, V of 1920, this is to give notice to the creditors of the aforesaid debtor that the Court has fixed the 26th day of January 1935 for hearing of the aforesaid petition and the examination of the debtor.

B. K. GUHA, District Judge.

Suri, the 22nd December 1934. (58—1)

ORDER OF ADJUDICATION.

Section 27 of the Provincial Insolvency Act, V of 1920.

In the 4th Court of the Sub-Judge at Alipore.

INSOLVENCY APPLICATION No. 209 OF 1934.

PURSUANT to a petition, dated 22nd May 1934, filed by Kornioni Ram of 26, Pottery Road, police-station Entally, 24-Parganas, and on the application of the debtor himself and on reading his application and hearing his pleader, it is ordered that the debtor be and the said debtor is hereby adjudged insolvent.

It is further ordered that the debtor do apply for his discharge within six months from this date.

Dated this 4th day of December 1934.

J. N. SEN, Sub-Judge.

(2799—1)

ORDER OF ADJUDICATION.

Section 27 of the Provincial Insolvency Act, V of 1920.

In the 4th Court of the Sub-Judge at Alipore.

INSOLVENCY APPLICATION No. 240 OF 1934.

PURSUANT to a petition, dated 12th June 1934, filed by Bhagwandas Shaw of 17, Jadu Nath Mitra Lane, police-station Maniktolla, 24-Parganas, and on the application of the debtor himself and on reading his application and hearing his pleader, it is ordered that the debtor be and the said debtor is hereby adjudged insolvent

It is further ordered that the debtor do apply for his discharge within six months from this date.

Dated this 4th day of December 1934.

J. N. SEN, Sub-Judge.

(2800—1)

ORDER OF ADJUDICATION.

Section 27 of the Provincial Insolvency Act, V of 1920.

In the 4th Court of the Sub-Judge at Alipore.

INSOLVENCY APPLICATION No. 259 OF 1934.

PURSUANT to a petition, dated 19th June 1934, filed by Mrs. D. Hancock of 8, Loco Quarters, Narikeldanga, 24-Parganas, and on the application of the debtor herself and on reading her application and hearing her pleader, it is ordered that the debtor be and the said debtor is hereby adjudged insolvent.

It is further ordered that the debtor do apply for her discharge within six months from this date.

Dated this 4th day of December 1934.

J. N. SEN, Sub-Judge.

(2801—1)

ORDER OF ADJUDICATION.

Section 27 of the Provincial Insolvency Act, V of 1920.

In the 4th Court of the Sub-Judge at Alipore.

INSOLVENCY APPLICATION No. 309 OF 1934.

PURSUANT to a petition, dated 21st July 1934, filed by Thakurdin of 4, Sett Bagan Road, Dum Dum, police-station Dum Dum, 24-Parganas, and on the application of the debtor himself and on reading his application and hearing his pleader, it is ordered that the debtor be and the said debtor is hereby adjudged insolvent.

It is further ordered that the debtor do apply for his discharge within six months from this date.

Dated this 4th day of December 1934.

J. N. SEN, Sub-Judge.

(2802—1)

ORDER OF ADJUDICATION.

Section 27 of the Provincial Insolvency Act, V of 1920.

In the 4th Court of the Sub-Judge at Alipore.

INSOLVENCY APPLICATION No. 319 OF 1934.

PURSUANT to a petition, dated 26th July 1934, filed by Md. Nafar Ali Molla of Juaru, police-station Diamond Harbour, and on the application of the debtor himself and on reading his application and hearing his pleader, it is ordered that the debtor be and the said debtor is hereby adjudged insolvent.

It is further ordered that the debtor do apply for his discharge within six months from this date.

Dated this 27th day of November 1934.

J. N. SEN, Sub-Judge.

(2803—1)

ORDER OF ADJUDICATION.

Section 27 of the Provincial Insolvency Act, V of 1920.

In the 4th Court of the Sub-Judge at Alipore.

INSOLVENCY APPLICATION No. 351 OF 1934.

PURSUANT to a petition, dated 15th August 1934, filed by Mrs. C. Manu of 40, Gorachand Road, Entally, and on the application of the debtor herself and on reading her application and hearing her pleader, it is ordered that the debtor be and the said debtor is hereby adjudged insolvent.

It is further ordered that the debtor do apply for her discharge within six months from this date.

Dated this 10th day of November 1934.

J. N. SEN, Sub-Judge.

(2804—1)

In the 4th Court of the Sub-Judge of 24-Parganas.

INSOLVENCY CASE No. 456 OF 1934.

Mahammad Fateyzal Hossain of Narainkali, police-station Habra, applicant.

To Kali Goalini of Baraset, police-station Baraset, and others, creditors.

ON the 30th day of November 1934 it was ordered that the matter of the petition of the applicant be heard on the 21st day of January 1935, and that the said applicant do attend to be examined by this Court on that date.

J. N. SEN, Sub-Judge.

Alipore, the 4th December 1934. (2805—1)

In the 4th Court of the Sub-Judge of 24-Parganas.

INSOLVENCY CASE No. 479 OF 1934.

Sudhindra Kumar Ghose of 4, Nakuleswar Bhattacharjee Lane, Monoharpuker, police-station Tollygunge, applicant.

To Sm. Rajbala Karmaker of 12, Kalighat Road, Bhowanipore, and others, creditors.

ON the 30th day of November 1934 it was ordered that the matter of the petition of the applicant be heard on the 21st day of January 1935, and that the said applicant do attend to be examined by this Court on that date.

J. N. SEN, Sub-Judge.

Alipore, the 1st December 1934. (2810—1)

In the 4th Court of the Sub-Judge of 24-Parganas.

INSOLVENCY CASE No. 481 OF 1934.

Bistoo Charan Polla of Kanchrapara, police-station Bijpore, applicant.

To Kalidasi Singh of Kanchrapara, police-station Bijpore, and others, creditors.

ON the 1st day of December 1934 it was ordered that the matter of the petition of the applicant be heard on the 21st day of January 1935, and that the said applicant do attend to be examined by this Court on that date.

J. N. SEN, Sub-Judge.

Alipore, the 4th December 1934. (2811—1)

In the 4th Court of the Sub-Judge of 24-Parganas.

INSOLVENCY CASE No. 487 OF 1934.

Jatindra Nath Shah of Shatrail, police-station Shatrail, district Howrah, applicant.

To Shynashi Charan Tarafder of 11-7, Kundu Lane, police-station Bhowanipore, and others, creditors.

ON the 29th day of November 1934 it was ordered that the matter of the petition of the applicant be heard on the 21st day of January 1935, and that the said applicant do attend to be examined by this Court on that date.

J. N. SEN, Sub-Judge.

Alipore, the 1st December 1934. (2814—1)

In the 4th Court of the Sub-Judge of 24-Parganas.

INSOLVENCY CASE No. 488 OF 1934.

Patit Paban Karmaker of 6B, Ram Kamal Street, police-station Watgunge, applicant.

To Monmath Nath Ghose of 76, Mansatala Lane, Kidderpore, and others, creditors.

ON the 29th day of November 1934 it was ordered that the matter of the petition of the applicant be heard on the 21st day of January 1935, and that the said applicant do attend to be examined by this Court on that date.

J. N. SEN, Sub-Judge.

Alipore, the 1st December 1934. (2815—1)

In the 4th Court of the Sub-Judge of 24-Parganas.

INSOLVENCY CASE No. 489 OF 1934.

Sarif Khan of Kankinara, police-station Jagadal, applicant.

To Jalil Khan of Kankinara, police-station Jagadal, and another, creditors.

ON the 29th day of November 1934 it was ordered that the matter of the petition of the applicant be heard on the 21st day of January 1935, and that the said applicant do attend to be examined by this Court on that date.

J. N. SEN, Sub-Judge.

Alipore, the 4th December 1934. (2816—1)

In the 4th Court of the Sub-Judge of 24-Parganas.

INSOLVENCY CASE No. 490 OF 1934.

Anukul Chandra Mondal of Bhadura, police-station Diamond Harbour, applicant.

To Bhola Nath Halder and Rajendra Nath Halder of Naoda, police-station Falta, and others, creditors.

ON the 30th day of November 1934 it was ordered that the matter of the petition of the applicant be heard on the 21st day of January 1935, and that the said applicant do attend to be examined by this Court on that date.

J. N. SEN, Sub-Judge.

Alipore, the 4th December 1934. (2817—1)

In the 4th Court of the Sub-Judge of 24-Parganas.

INSOLVENCY CASE No. 492 OF 1934.

Purna Das of Batikal Bangla, Metiaburz, police-station Metiaburz, applicant.

To Shahjahan Khan Kabuli of Old Metiaburz, police-station Metiaburz, and others, creditors.

ON the 1st day of December 1934 it was ordered that the matter of the petition of the applicant be heard on the 21st day of January 1935, and that the said applicant do attend to be examined by this Court on that date.

J. N. SEN, Sub-Judge.

Alipore, the 4th December 1934. (2818—1)

In the 4th Court of the Sub-Judge of 24-Parganas.

INSOLVENCY CASE No. 494 OF 1934.

Sadem Ali of 78, Sarker Bagan, police-station Chitpore, Calcutta, applicant.

To Hariprosad Agarwalla of Iswardi, district Pabna, and others, creditors.

ON the 4th day of December 1934 it was ordered that the matter of the petition of the applicant be heard on the 17th day of January 1935, and that the said applicant do attend to be examined by this Court on that date.

J. N. SEN, Sub-Judge.

Alipore, the 6th December 1934. (2819—1)

In the 4th Court of the Sub-Judge of 24-Parganas.

INSOLVENCY CASE No. 497 OF 1934.

Baghahari Das of 115, Lot No. 2, Nandakumarpore, police-station Muraripore, applicant.

To Hira Lal Bhakat and Mati Lal Bhakat of Kagdip, and others, creditors.

ON the 5th day of December 1934 it was ordered that the matter of the petition of the applicant be heard on the 21st day of January 1935, and that the said applicant do attend to be examined by this Court on that date.

J. N. SEN, Sub-Judge.

Alipore, the 14th December 1934. (10—1)

ORDER ANNULLING ADJUDICATION.

Section 43 of the Provincial Insolvency Act, V of 1920.

In the 4th Court of the Sub-Judge at Alipore.

INSOLVENCY APPLICATION No. 7 OF 1934.

Suraj Goala Kuber Goala, a firm, applicant.

WHEREAS Suraj Goala Kuber Goala, a firm, carrying on business at 18-1, Canal West Road, police-station Beliaghata, does neither appear nor apply for discharge within the specified time fixed, it is ordered that the order of adjudication, dated 16th June 1934, against the debtor be and the same is hereby annulled.

Dated this 20th day of December 1934.

J. N. SEN, Sub-Judge.

ORDER ANNULLING ADJUDICATION.

Section 43 of the Provincial Insolvency Act, V of 1920.

In the 4th Court of the Sub-Judge at Alipore.

INSOLVENCY APPLICATION No. 34 OF 1934.

Panchanon Ray, applicant.

WHEREAS Panchanon Ray of 40, Lake Road, police-station Tollygunge, does neither appear nor apply for discharge within the specified time fixed, it is ordered that the order of adjudication, dated 16th June 1934, against the debtor be and the same is hereby annulled.

Dated this 18th day of December 1934.

J. N. SEN, Sub-Judge.

ORDER ANNULLING ADJUDICATION.

Section 43 of the Provincial Insolvency Act, V of 1920.

In the 4th Court of the Sub-Judge at Alipore.

INSOLVENCY APPLICATION No. 40 OF 1934.

Sadhu Ram, applicant.

WHEREAS Sadhu Ram of 113-4, Hazra Road, police-station Bhowanipore, does neither appear nor apply for discharge within the specified time fixed, it is ordered that the order of adjudication, dated 16th June 1934, against the debtor, be and the same is hereby annulled.

Dated this 18th day of December 1934.

J. N. SEN, Sub-Judge.

ORDER ANNULLING ADJUDICATION.

Section 43 of the Provincial Insolvency Act, V of 1920.

In the 4th Court of the Sub-Judge at Alipore.

INSOLVENCY APPLICATION No. 55 OF 1934.

Harendra Nath Mukherjee, applicant.

WHEREAS Harendra Nath Mukherjee of 21, Iswar Ganguly Lane, Kalighat, police-station Bhawanipore, does neither appear nor apply for discharge within the specified time fixed, it is ordered that the order of adjudication, dated 23rd June 1934, against the debtor be and the same is hereby annulled.

Dated this 2nd day of January 1935.

J. N. SEN, Sub-Judge.

ORDER ANNULLING ADJUDICATION.

Section 43 of the Provincial Insolvency Act, V of 1920.

In the 4th Court of the Sub-Judge at Alipore.

INSOLVENCY APPLICATION No. 98 OF 1934.

Amullya Charan Baidya, applicant.

WHEREAS Amullya Charan Baidya of 3, Manshatola Lane, Khidderpore, does niether appear nor apply for discharge within the specified time fixed, it is ordered that the order of adjudication, dated 16th June 1934, against the debtor be and the same is hereby annulled.

Dated this 18th day of December 1934.

J. N. SEN, Sub-Judge.

ORDER ANNULLING ADJUDICATION.

Section 43 of the Provincial Insolvency Act, V of 1920.

In the 4th Court of the Sub-Judge at Alipore.

INSOLVENCY APPLICATION No. 100 OF 1934.

Mahabir Sha, applicant.

WHEREAS Mahabir Sha of 40, Girish Mukherjee Road, police-station Bhawanipore, does neither appear nor apply for discharge within the specified time fixed, it is ordered that the order of adjudication, dated 27th June 1934, against the debtor be and the same is hereby annulled.

Dated this 2nd day of January 1935.

J. N. SEN, Sub-Judge.

ORDER ANNULLING ADJUDICATION.

Section 43 of the Provincial Insolvency Act, V of 1920.

In the 4th Court of the Sub-Judge at Alipore.

INSOLVENCY APPLICATION No. 105 OF 1934.

Abdul Rashid, applicant.

WHEREAS Abdul Rashid of 21-1, Gopal Chandra Mukherjee Road, police-station Chitpore, does neither appear nor apply for discharge within the specified time fixed, it is ordered that the order of adjudication, dated 23rd June 1934, against the debtor be and the same is hereby annulled.

Dated this 2nd day of January 1935.

J. N. SEN, Sub-Judge.

ORDER ANNULLING ADJUDICATION.

Section 43 of the Provincial Insolvency Act, V of 1920.

In the 4th Court of the Sub-Judge at Alipore.

INSOLVENCY APPLICATION No. 106 OF 1934.

Md. Shamsul Huq, applicant.

WHEREAS Md. Shamsul Huq of 1-1, Ice Factory Lane, police-station Entally, does neither appear nor apply for discharge within the specified time fixed, it is ordered that the order of adjudication, dated 30th June 1934, against the debtor be and the same is hereby annulled.

Dated this 2nd day of January 1935.

J. N. SEN, Sub-Judge.

ORDER ANNULLING ADJUDICATION.

Section 43 of the Provincial Insolvency Act, V of 1920.

In the 4th Court of the Sub-Judge at Alipore.

INSOLVENCY APPLICATION No. 155 OF 1934.

Parry Johan, applicant.

WHEREAS Parry Johan of Sealdah, 24-Parganas, does neither appear nor apply for discharge within the specified time fixed, it is ordered that the order of adjudication, dated 29th June 1934, against the debtor be and the same is hereby annulled.

Dated this 2nd day of January 1935.

J. N. SEN, Sub-Judge.

WANTED a Clerk in the scale of Rs. 35--35—40—2/2—60 for the office of the District Inspector of Schools, Pabna.

None need apply who has not passed the I.A. or I.Sc. Examination. Preference will be given to those who know typewriting and have some office experience.

Applications stating name in full, father's name, home address, village, thana, post office and district and age should reach the undersigned before 31st January 1935.

K. AHMED,
Inspector of Schools, Rajshahi Division.

Jalpaiguri, the 12th January 1935.

WANTED a Head Maulvi in the scale of Rs. 60—7/2—95—5/2—140 for a Government High School in the Rajshahi Division.

The applicant must be a Senior Madrasah passed man with sufficient knowledge of English and must be very strong in Urdu.

Applications stating qualifications in detail, name in full, father's name, home address, village, post office, thana, district and age with date of birth should reach the undersigned on or before the 15th February 1935.

K. AHMED,
Inspector of Schools, Rajshahi Division.

Jalpaiguri, the 12th January 1935.

WANTED a Muslim Lecturer in Civics and Political Economy for the Islamia College, Calcutta, on Rs. 125—25/2—150—20/2—250—15/2—310—20/2—350 (efficiency bar after 16th stage).

2. Candidates must possess the M. A. degree in Economics, not below Class II, of an Indian University or an equivalent degree of a British University.

3. Applications with copies of testimonials regarding age, qualifications, experience, etc., should reach the Principal, Islamia College, Calcutta, not later than 20th January 1935.

4. If the mother tongue of the successful candidate is other than Bengali, he will be required to pass the Departmental Examination in Bengali by the higher standard.

WANTED a District Engineer for the District Board of Rajshahi on Rs. 400—20—650. Candidates must be qualified as per Bengal Government notifications No. 1781 L.S.-G., dated 12th December 1912, and No. 809, dated 18th February 1922.

Candidates should apply in sealed and registered covers addressed to Chairman, District Board, Rajshahi, and superscribed "Application for appointment of District Engineer" accompanied by all the necessary certificates in original and testimonials required by the rules together with a suitable envelope addressed and sufficiently stamped for registration in which they can be returned in the event of the application being unsuccessful. Applicants must state their age, experience, native district and place of residence.

Applications will be received up to the 7th February 1935.

The selected candidate will be on probation for one year to be confirmed thereafter on approved service. He will not be allowed any travelling allowance for joining the post.

KUMAR P. N. ROY, Chairman, District Board.

Rajshahi, the 22nd December 1934. (73—3)

APPLICATIONS are invited for the post of the Assistant Superintendent of the Hindu Students' Mess, Bengal Engineering College, in the scale of Rs. 75—5/2—90. The applicant must have experience in the management of a big mess and a good knowledge of accounts. The selected candidate will be on probation for two years and must furnish a security of Rs. 500 in cash. Applications with copies of testimonials will be received up to 24th January 1935, by the Principal, Bengal Engineering College, post office Botanic Garden, Howrah. Canvassing direct or indirect will be a disqualification.

APPLICATIONS are invited for the posts of three probationers in the Civil Courts of this district on pay of Rs. 35. The applicants must be graduates of the Indian Universities. Preference will be given to those who are efficient in shorthand and typewriting.

Candidates must not be over 22 years of age and they must produce certificates of good moral character from the College in which they have last been educated, or from some respectable householder to whom they are well known in private life and who are themselves known to be some respectable officers of Government, the last fact being certified by the countersignatures of the officers in question. Candidates must also state their relationship, if any, to any of the ministerial officers in all the offices of the district.

I shall interview personally the candidates as appear to be suitable before making any final selection, but they will get no travelling allowance for coming over to this place.

Applications will be received by me up to 25th January 1935.

S. C. SEN, *for* District Judge.

Noakhali, the 5th January 1935. (118—1)

THE Bengal and Madras Service Family Pension Fund which is provisionally managed and assisted by Government has for its object the provision of monthly pensions for the maintenance of the widows and children of subscribers and is open, with certain exceptions, to all active and pensioned members of the Uncovenanted service of Government (except those serving under the Government of Bombay), and to Local Fund servants earning pensions from Government. Some of the special features of the fund are (1) that widowed daughters incapable of re-marriage or children labouring under such mental or bodily infirmities as incapacitate them from earning their livelihood or preclude the possibility of marriage (in case of a daughter) are admitted to its benefits; and (2) that subscribers to the Widows and Daughters' branches are entitled to a refund of 30 per cent. of the premia paid, should the nominee predecease them after five years of admission. The second quinquennial valuation of the Fund has been completed by the Actuary to the Government of India, and his report discloses very favourable results. For forms of application and rules of the Fund apply to the Accountant-General, Bengal, Imperial Secretariat Buildings, Calcutta.

NOTICE is hereby given that all exhibits filed in cases disposed of in this Court during the year 1932 will be destroyed if not taken back before 31st March 1935 by the parties who filed them.

N. N. GUPTA, Municipal Magistrate, Calcutta.

Town Hall, Calcutta, the 9th January 1935.

NOTICE is hereby given that all exhibits filed in cases disposed of in this Court during the year 1932 will be destroyed if not taken back before 31st March 1935 by the parties who filed them.

A. MAJID, Municipal Magistrate, Calcutta.

Town Hall, Calcutta, the 9th January 1935.

Bengal Public Health Department.

TENDERS in duplicate in sealed covers are invited for the weekly supply of cattle food including straw and chaff during the twelve months from the 1st April 1935 to the 31st March 1936. They will be received up to the 16th February 1935 by the Personal Assistant to the Director of Public Health, Bengal, at his office in Writers' Buildings, from whom forms and conditions of tenders are obtainable free on application. Prior to delivering their tenders, intending contractors must deposit with the Superintendent of the Bengal Vaccine Institute at No. 2, Convent Lane, Intally, two samples of each of the articles proposed to be supplied under contract. Tenderers must abide by the prescribed conditions.

Bengal Public Health Department.

TENDERS in duplicate in sealed covers are invited for the supply of cow and buffalo calves at the Bengal Vaccine Institute at No. 2, Convent Lane, Intally, for the period from 1st April 1935 to 31st March 1936. Tenders may be submitted for either cow or buffalo calves or both and will be received up to 9th March 1935 at his office by the Personal Assistant to the Director of Public Health, Bengal, Writers' Buildings, from whom forms and conditions of tenders are obtainable free on application. Tenderers must abide by the prescribed conditions.

The Commissioners for the Port of Calcutta.

NOTIFICATION No. 138.

IT is hereby notified for general information under the provisions of the Calcutta Port Act, and with the approval of the Local Government, that on and from the 1st January 1935 the following charges will be levied on sugar exported from Calcutta :—

Shipping charge—8 annas per ton or part of a ton.
River due—6 annas per ton or part of a ton.
Fixed toll—4 annas per ton or part of a ton.

By order of the Commissioners—

C. W. T. HOOK, Secretary.

Calcutta, the 11th January 1935. (160—1)

Irrigation Department, Bengal.

IN accordance with rule 30 of the Navigation Rules for the Calcutta and Eastern Canals issued under section 11 of the Canals Act (Bengal Act V of 1864), and published under Irrigation Department notification No. 16-I, dated the 14th April 1924, notice is hereby given for general information that from the 22nd February 1935 to 28th February 1935 (both days inclusive) a temporary barrier will be erected across the New Cut Canal near the Dakhindari Railway Bridge for the purpose of flushing the canal and that all boat traffic between Calcutta and the East will be diverted along the Circular and New Cut Canals *via* Dhappa.

S. N. BANERJI, Superintending Engineer,
Southern Circle.

Calcutta, the 12th January 1935.

Forest Department, Bengal.

Stipendiary Studentship for the Ranger Class at Dehra Dun, 1935-37.

1. THE Government of Bengal intend to select two Muhammadan candidates for deputation to the Rangers' Service Course at the Forest College, Dehra Dun, in April 1935.

2. Candidates must be not less than 18 and not more than 25 years of age on the 1st November 1935, and must have passed the B.A., B.Sc., I.A., or I.Sc., Examination of one of the Indian Universities.

3. Applications should be submitted to the Conservator of Forests, Bengal, 35, Gopalnagore Road, Alipore, by the 20th January 1935.

They should be made in the applicant's own handwriting and sent to the Conservator through the Collector of the district in which the candidate resides or, if he resides in a Forest Division, through the Divisional Forest Officer. They must be accompanied by the following certificates (in original) :—

(*a*) A certificate that the candidate is a native of India within the meaning assigned to those words by section 6 of 33 Vict., Chapter 3.

(*b*) A certificate of age.

(*c*) A health certificate in the form prescribed by Article 49 of the Civil Service Regulations, Fifth Edition, signed by the Civil Surgeon of the district and testifying to the candidate's sound constitution, good vision and hearing, and general physical fitness for a rough out-door life in the Forest Department and to the fact that he bears on his body marks of successful vaccination or of small-pox.

(*d*) A certificate of respectability and good moral character from two or more persons whose social or official position can be accepted as a guarantee of reliability.

(The certificates (*c*) and (*d*) must bear date not earlier than the 1st July 1934.)

(If any person giving certificates as above under (*c*) and (*d*) is in a position to mention anything more to the credit of the candidate than the certificates actually called for, he may do so.)

(*e*) A certificate of having passed the B.A., B.Sc., I.A., or I.Sc., Examination of any of the Indian Universities.

(*f*) A certificate that the candidate has a sufficient knowledge of colloquial English to assimilate lectures delivered in that language without the aid of dictation.

4. From the applications received the Conservator will make a preliminary selection of not more than twice the number of men to be deputed to the Rangers' Course. Candidates so selected will be required to undergo a course of practical training in the forests of North Bengal for a period of six weeks.

5. The Conservator will dispense with the services of any candidate whose work or conduct at any time during his training is unsatisfactory.

6. While undergoing the preliminary training the selected candidates will be granted monthly stipends of Rs 25.

7. Final selection of candidates for deputation to the Forest College will be made by the Conservator in accordance with the results of the preliminary training, preference being given to the men who are considered likely to make the best Forest Officers.

8. While at the Forest College the selected candidates will be granted a monthly stipend of Rs. 50. Selected candidates will be obliged to execute the agreement and security bond prescribed by Government.

E. O. SHEBBEARE,
Conservator of Forests, Bengal.

Alipore, the 7th January 1935.

NOTICE is hereby given that Liladhar Jivraj and Manji Jivraj have retired from our clients' firm of Messrs. Chimanlal Vadilal & Co., carrying on business as piece-goods merchants at No. 12, Narmull Lohia Lane (Pacha Gali), Calcutta, as from the 30th of Asso Vadi Sambat year 1990 (7th November 1934) and the said Liladhar Jivraj and Manji Jivraj have since then no concern with our clients' said firm.

KHAITAN & CO.,

Attorneys for Messrs. Chimanlal Vadilal & Co.,

1, Old Post Office Street, Calcutta, 3rd January 1935.

(90—1)

Notice under section 40 of the Transfer of Property Act.

Re 1½ bigha land at No. 6, Raja Apurba Krishna Lane, Cossipore.

(Division 1—Subdivision 14—Holding 120.)

KNOW all men concerned that Babu Raghunath Das, owner of the above land, has entered into an agreement with my client Babu Fakir Chanda Ghosh for sale of the above land on 23rd September 1934 last. Anybody in any way dealing with the said land in spite of the said agreement shall do so at his own risk and my client's right under the said agreement shall not be affected thereby.

BENI MADHAB CHATTERJEE, Pleader,

District Bar Library, Alipore.

Alipore, the 10th January 1935.

(122—1)

Estate Sir Frederick Palmer, K.C.M.G., C.I.E., deceased.

PURSUANT to section 360 of Act XXXIX of 1925 and section 42 of Act XXVIII of 1866, the creditors and all persons interested in the Estate of Sir Frederick Palmer, late of Crowhurst Place, Lingfield, Surrey, and of 55, Broadway, Westminster, England, who died at Crowhurst Place, aforesaid, on the 7th day of April 1934, and Letters of Administration to whose Estate were granted by the High Court, Calcutta, on the 21st day of December 1934, are hereby required to submit particulars of their claims to the undersigned on or before the 23rd day of February 1935, after which date the Administrators will distribute the assets, having regard only to the claims of which notice shall then have been received.

ORR, DIGNAM & CO.,

Solicitors to the Administrators.

32, Dalhousie Square, South, Calcutta, 12th January 1935.

(125—1)

Lost.

A RECEIPT numbered 1104, dated 19th October 1934, and granted by the Public Debt Office, Imperial Bank of India, on submission of the undermentioned Government Promissory Notes. Notice of loss has been given to the Public Debt Office, Imperial Bank of India, and the undersigned is about to apply for surrender of the securities :-

G. P. Note No.	Loan.	Amount.	Holder's name.
		Rs.	
G O 35727	5 per cent., 1945-55.	1,000	Maharani Jyotirmoyee Debi.
K O 03648	5 per cent., 1945-55.	25,000	"

Name of the proprietress Maharani Jyotirmoyee Debi (N. K. Sen, Solicitor for the said proprietress).

Residence - 2, Bright Street, Ballygunge, Calcutta.

(96—1)

Lost, Stolen or Destroyed.

THE Government Promissory Note No. 075328 of the 3½ per cent. loan of 1854-55 for Rs. 500, originally standing in the name of Prosad Das Boral and Brothers, and last endorsed to Tulsi Das Dey (since deceased), the proprietor, by whom it was never endorsed to any other person, having been lost, stolen or destroyed, notice is hereby given that payment of the above note and the interest thereupon have been stopped at the Public Debt Office, Imperial Bank of India, Calcutta, and that application is about to be made for the issue of duplicate in favour of Lalit Mohan Dey. The public are cautioned against purchasing or otherwise dealing with the abovementioned security.

Signature of the advertiser—Lalit Mohan Dey.
Residence—13, Kailash Bose Street, Calcutta.

(109—3)

In the matter of the Indian Companies Act, 1913, and In the matter of the Providential Insurance Co., Ltd.

AT an extraordinary general meeting of the above-named Company duly convened and held at Narainganj on 18th November 1934, the following resolution, and at a subsequent extraordinary general meeting of the said Company also duly convened and held at the same place on 16th December 1934, the following resolution was duly confirmed as a special resolution, viz., resolved that while the Company is unwilling to work any provident insurance scheme and while it has been proved to the entire satisfaction of this meeting that the Company cannot by reason of its liabilities continue business, the Company be wound up ; and at such last mentioned meeting Mr. N. K. Bardhan of Mirpur, Dacca, was appointed liquidator for the purposes of the winding up.

N. K. BARDHAN, Liquidator.

Narainganj, the 22nd December 1934. (75—1)

IN THE HIGH COURT OF JUDICATURE AT FORT WILLIAM IN BENGAL.

Ordinary Original Civil Jurisdiction.

In the matter of the Indian Companies Act, and In the matter of American Eastern Tobacco Corporation, Ltd.

NOTICE is hereby given that a petition for the winding up of the above Company by the High Court of Judicature at Fort William in Bengal was on the 10th day of December 1934 presented to the said Court by Phiroze Behramji Malabari, Official Assignee of Bombay, as assignee of Messrs. Dharamsey & Co., creditors of the said Company ; and that the said petition is directed to be heard before the Court on the 4th day of February 1935 ; and that any creditor or contributory of the said Company desirous of opposing an order for the winding up of the said Company under the above Act should appear at the time of hearing by himself or his attorney or advocate for that purpose ; and a copy of the petition will be furnished to any creditor or contributory of the said Company requiring the same, by the undersigned, on payment of the prescribed charge for the same.

Dated the 9th day of January 1935.

RAJKUMAR BASU, Attorney for the petitioner.

1B, Old Post Office Street, Calcutta.

Note.—Rule 41 provides that any person who intends to appear on the hearing of the said petition must serve on or send by post to the abovenamed, notice in writing of his intention so to do. The notice must state the name and address of the person or, if a firm, the name and address of the firm, and must be signed by the person or firm, or his or their attorney (if any), and must be served, or if posted, must be sent by post in sufficient time to reach the abovenamed not later than two clear days before the 4th day of February 1935.

(2851—1)

In the matter of the Indian Companies Act, and In the matter of Tarabari Tea and Trading Co., Ltd. (in liquidation).

NOTICE is hereby given that Mr. Suresh Chandra Pal, pleader of and residing at Jalpaiguri, by an order, dated the 21st day of May 1934, has been appointed official liquidator of the abovenamed Company.

Dated this 10th day of December 1934.

P. D. HIMATSINGKA & CO.,
Attorneys for the petitioner.

(2781—1)

In the matter of the Indian Companies Act, and In the matter of Laheri & Co., Ltd. (in liquidation).

NOTICE is hereby given that Mr. Bankim Chandra Datta, an advocate, of No. 1B, Old Post Office Street, Calcutta, by an order, dated the 26th day of November 1934, has been appointed the Official Liquidator of the abovenamed Company.

AJIT KUMAR DEY,
Attorney for the petitioner.

Calcutta, the 21st December 1934. (40—1)

In the matter of the Indian Companies Act, 1913, and In the matter of the Providential Insurance Co., Ltd.

NOTICE is hereby given that a meeting of the creditors of the Company will be held at Narainganj at the Crescent Club premises on 27th January 1935, at 2 p.m., in pursuance of section 209 of the Indian Companies Act.

N. K. BARDHAN, Liquidator.

Narainganj, the 22nd December 1934. (76—1)

In the matter of the Indian Companies Act, 1913, and In the matter of the Naba Bharat Mutual Insurance Co., Ltd., Munshiganj (Dacca).

AT an extraordinary general meeting of the members of the above-named Company duly convened and held at Munshiganj in the registered office of the Company on the 21st day of December 1934, the following extraordinary resolution was duly passed :—

"In considering the resolution of the Directors' meeting held on 2nd December 1934, the Company, owing to its present financial condition and by reason of its liabilities, cannot continue its business and it is advisable to wind up and hence it is resolved that the Company be put into voluntary liquidation and it is further resolved that Mr. J. M. Das, B.L., Pleader, Munshiganj (Dacca), is hereby appointed liquidator" (for the purposes of such winding up).

Dated this 27th day of December 1934.

RADHA MADHAB DAS, Chairman.

(84—1)

In the matter of the Indian Companies Act, 1913, and In the matter of United Service Bank and Insurance, Ltd.

NOTICE is hereby given that at an extraordinary general meeting held on 1st January 1935, the abovenamed Company has, by an extraordinary resolution, been put into voluntary liquidation and Sj. Susil Chandra Das, c/o late Nabin Chandra Das, Lamapara, Comilla, has been appointed the liquidator.

SUSIL CHANDRA DAS, Liquidator.

Comilla, the 4th January 1935. (98—1)

In the matter of the Indian Companies Act, 1913, and In the matter of United Service Bank and Insurance, Ltd.

NOTICE is hereby given that a meeting of the creditors of the abovenamed Company will be held on 23rd January 1935 at 4-30 p.m. at the office of the Company, Talpukurpar, Comilla.

SUSIL CHANDRA DAS, Liquidator.

Comilla, the 4th January 1935. (99—1)

In the matter of the Indian Companies Act, 1913, and In the matter of Redbank (Dooars) Tea Company, Limited (in liquidation).

NOTICE is hereby given that a general meeting of the members of the abovenamed Company will be held at the registered office of the Company, No. 8, Clive Row, Calcutta, on Wednesday, 30th January 1935, at 3-15 p.m., for the purpose of receiving the liquidators' report and accounts made up to 31st December 1934, showing the manner in which the winding up is being conducted and to hear any explanation which may be given by the liquidators.

C. A. CARMICHAEL,
G. A. S. SIM,
Liquidators.

Calcutta, the 4th January 1935. (92—1)

In the matter of the Indian Companies Act, 1913, and In the matter of Adjai Coal Company, Limited (in liquidation).

NOTICE is hereby given that a general meeting of the members of the abovenamed Company will be held at the registered office of the Company, No. 8, Clive Row, Calcutta, on Wednesday, 30th January 1935, at 3-20 p.m., for the purpose of receiving the liquidators' report and accounts made up to 30th November 1934, showing the manner in which the winding up is being conducted and to hear any explanation which may be given by the liquidators.

G. A. S. SIM *for* self and co-liquidator.

Calcutta, the 4th January 1935. (93—1)

In the matter of the Indian Companies Act, 1913, and In the matter of Greenwitch Insurance Company (in liquidation).

NOTICE is hereby given that in an extraordinary general meeting of the members of the abovenamed Company it has been resolved that it has been proved to the entire satisfaction of the meeting that the Company cannot, by reason of its liabilities, continue its business and that it is advisable to wind up, the Company be and is hereby wound up voluntarily and that Mr. S. R. Dutt, B.A., be and is hereby appointed liquidator for the purpose of such winding up.

A. C. DUTTA, Chairman.

Ganginapar, Mymensingh, the 22nd December 1934. (100—1)

In the matter of the Indian Companies Act, 1913, and In the matter of the Greenwitch Insurance Co., Mymensingh (in voluntary liquidation).

NOTICE is hereby given, pursuant to section 209 of the Indian Companies Act, 1913, that a meeting of the creditors of the abovenamed Company will be held at the liquidator's office at Panditpara, Mymensingh, on Saturday, the 26th January 1935, at 4 p.m.

S. R. DUTT, B.A., Liquidator.

Mymensingh, the 10th January 1935. (123—1)

In the matter of the Indian Companies Act, 1913 (VII of 1913), and In the matter of the Assam Bengal Industrial Bank, Ltd.

PURSUANT to the provisions of section 172(2) of the Indian Companies Act, 1913 (VII of 1913), notice is hereby given that an order was made on the 7th August 1933 by the High Court of Judicature at Fort William in Bengal in its Ordinary Original Civil Jurisdiction under section 162 of the said Act for winding up the Assam Bengal Industrial Bank, Ltd.

N. K. MAJUMDER, Registrar of Companies under Act VII of 1913.

Calcutta, the 11th January 1935.

Imperial Library.

(Secretariat Buildings, 6, Esplanade East, Calcutta.)
Open on—

Week days and Saturdays from 10 a.m. to 7 p.m.
Sundays and Gazetted holidays from 2 p.m. to 5 p.m.

THE Imperial Library is also a Lending Library. It is free to all except children. There is no subscription to pay

K. M. ASADULLAH, Librarian.

CINCHONA FACTORY PRODUCTS.

By order of the Government of Bengal Cinchona Factory Products as manufactured and packed at the Cinchona Factory, Mungpoo, Darjeeling district, will be sold and distributed by the Superintendent of the **Presidency Jail**, *in original packages* as received from the Mungpoo Factory, at the rates herein noted **from the 1st May 1926 :—**

Quinine Sulphate.

For 60 lbs. and upwards at a time	..	Rs. 18 per lb.
For 6 lbs. and over but less than 60 lbs. at a time	.. .. ..	,, 19 ,,
For any quantity less than 6 lbs.	..	,, 20 ,,

Quinine Hydrochloride.

For 60 lbs. and upwards at a time	..	Rs. 23 per lb.
For 6 lbs. and over but less than 60 lbs. at a time	.. .. ..	,, 24 ,,
For any quantity less than 6 lbs.	..	,, 25 ,,

Quinine Di-Hydrochloride.

For 60 lbs. and upwards at a time	..	Rs. 25 per lb.
For 6 lbs. and over but less than 60 lbs. at a time	.. .. ..	,, 26 ,,
For any quantity less than 6 lbs.	..	,, 27 ,,

Quinidine Sulphate.

For 60 lbs. and upwards at a time	..	Rs. 20 per lb.
For 6 lbs. and over but less than 60 lbs. at a time	.. .. ..	,, 21 ,,
For any quantity less than 6 lbs.	..	,, 22 ,,

Cinchonidine Sulphate.

For 60 lbs. and upwards at a time	..	Rs. 25 per lb.
For 6 lbs. and over but less than 60 lbs. at a time	.. .. ..	,, 26 ,,
For any quantity less than 6 lbs.	..	,, 27 ,,

Cinchonine Sulphate.

For 60 lbs. and upwards at a time	..	Rs. 12 per lb.
For 6 lbs. and over but less than 60 lbs. at a time	.. .. ..	,, 13 ,,
For any quantity less than 6 lbs.	..	,, 14 ,,

Cinchona Febrifuge (Powder).

For 60 lbs. and upwards at a time	..	Rs. 9 per lb.
For 6 lbs. and over but less than 60 lbs. at a time	.. .. ..	,, 9 ,,
For any quantity less than 6 lbs.	..	,, 10 ,,

Cinchona Febrifuge (Tablets).

For 60 lbs. and upwards at a time	..	Rs. 10 per lb.
For 6 lbs. and over but less than 60 lbs. at a time	.. .. ..	,, 10 ,,
For any quantity less than 6 lbs.	..	,, 11 ,,

Quinoidine (Tablets).

For 60 lbs. and upwards at a time	..	Rs. 5 per lb.
For 6 lbs. and over but less than 60 lbs. at a time	.. .. ..	,, 5 ,,
For any quantity less than 6 lbs.	..	,, 6 ,,

Quinoidine (In Mass).

For 60 lbs. and upwards at a time	..	Rs. 4 per lb
For 6 lbs. and over but less than 60 lbs. at a time	.. .. ..	,, 4 ,,
For any quantity less than 6 lbs.	..	,, 5 ,,

Cinchona Bark (in 50 pound original bags).

Per bag .. .. .. Rs. 25.

per box of 200 tablets each.

Quinine Tablets—

Rs. 2-8 (Bengal), Rs. 3 (outside Bengal)

Rs. 15-8-0 per lb.

Transit charges extra in every case.

Quinine Sulphate is for sale to Government Institutions and Missionaries only. It is not for sale to Private Firms or the General Public.

Cinchona Febrifuge in Powder and Tablet form (when in stock) is for sale to Government Institutions Missionaries and the General Public.

Quinine Sulphate will be supplied to Hospitals and Dispensaries of this Presidency only at the wholesale rate of Rs. 18 per lb., irrespective of quantities. For all other purchasers the rates given above will apply.

Five and ten boxes of Quinine Tablets are sold to the public at the concession rates which will be intimated in application.

Provinces other than Bengal, Bihar and Orissa and Assam will get their supplies of Sulph. Quinine from the Director, Botanical Survey of India, Sibpur, Howrah.

Local sale at the jail gate from 10 to 12 noon.

The system of payment is by—*Cash in advance*—by "*Treasury Challans*," which should accompany the order or indent.

In cases where this is not possible, payment should be made by "*Remittance Transfer Receipts*" or crossed "*Cheques*."

Indents unaccompanied by cash in advance will be sent Value Payable Post. Credit sale is not allowed except under special circumstances.

In the case of *Government officers* payments will be recovered by *Book Transfer, i.e., Countersigned Invoices*, in the event of *Cash* not accompanying the indent by "*Treasury Challans*," *Remittance Transfer Receipt or Cheque*.

2. Price and postage must accompany the price of the drug (when the drug is required by post).

The name of the Railway and Steamer Station or Post Office must be written distinctly when the parcels are required by Rail, Steamer or by Post. Railway parcels are sent by passenger train only.

A scale of postage is given below.

	1 oz.	2 ozs.	4 ozs.	½ lb.	¾ lb.	1 lb.
	As.	As.	As.	As.	As.	Rs. A.
Quinine Sulph. ..	..	..	7	7	11	0 11
Cinchona Feb. ..	..	..	7	7	11	0 11
Cinchona Feb. Tablets	..	..	7	7	11	0 11
Quinoidine Tablets ..	..	..	..	..	..	1 13
Quinine Hydrochlor. ..	5	5	7	7	..	0 11
Quinine Di-hydrochlor.	5	5	7	7	..	0 11
Quinine Tablets ..	..	..	7	7	11	0 11

	1½ lb.	2 lb.	3 lb.	4 lb.	5 lb.	6 lb.
	Rs. A.	Rs. A.	Rs. A.	Rs. A.	Rs. A.	Rs. A.
Quinine Sulph. ..	0 15	1 3	1 7	1 15	2 7	2 15
Cinchona Feb. ..	0 15	0 15	1 7	1 11	1 15	2 7
Cinchona Feb. Tablets	1 3	1 3	1 11	1 15	2 7	2 15
Quinoidine Tablets ..	..	2 3	3 3	..	..	..
Quinine Hydrochlor. ..	1 1	0 15	1 7	1 11	..	..
Quinine Di-hydrochlor.	1 1	0 15	1 13	2 5	..	..
Quinine Tablets ..	0 15	0 14	1 7	1 11	1 15	2 3

Two different drugs are not packed in the same parcel and postage must be paid separately for each kind.

N.B.—Postage stamps are not accepted as revenue.

Government reserve the right to alter the price without notice.

Registered No. C207

The Calcutta Gazette

THURSDAY, JANUARY 17, 1935.

PART IV

Bills introduced in the Bengal Legislative Council, Reports of Select Committees presented or to be presented to that Council, and Bills published before introduction in that Council.

BENGAL LEGISLATIVE COUNCIL DEPARTMENT.

NOTIFICATION.

No. 294L.C.—11th January, 1935.—In pursuance of the provisions of rule 20 of the Bengal Legislative Council Rules, 1920, the following Bill which was introduced in the Bengal Legislative Council on the 14th December, 1934, is hereby published for general information together with the Statement of Objects and Reasons annexed thereto.

THE BENGAL TENANCY (AMENDMENT) BILL, 1934.

A

BILL

further to amend the Bengal Tenancy Act, 1885.

WHEREAS it is necessary further to amend the Bengal Tenancy Act of 1885 as amended by the amending Bengal Act, IV of 1928 (hereinafter referred to as the said Act) in the manner hereinafter appearing :— VIII of 1885.

AND WHEREAS the previous sanction of the Governor General has been obtained under sub-section (*3*) of the section 80A of the Government of India Act to the passing of this Act ; 5 and 6 Geo. V, c. 61 ; 6 and 7 Geo. V, c. 37 ; 9 and 10 Geo. V, c. 101.

It is hereby enacted as follows :—

Short title. 1. This act may be called the Bengal Tenancy (Amendment) Act, 1934.

Commencement. 2. This Act shall come into force on the day on which it is published in the *Calcutta Gazette*.

Application of Act. 3. This Act shall apply wherever the Bengal Tenancy Act, 1885, as amended by the Bengal Tenancy Amendment Act, 1928, applies.

Amendment of section 48C. 4. In section 48C of the said Act the following words will be added at the end of sub-clause (*2*) of clause (*i*) of the proviso, viz., " irrespective of whether or not the tenancy has terminated by expiry of the term, or it has been determined by notice, or the suit for ejectment has been instituted before or after the commencement of the Bengal Tenancy Amendment Act, IV of 1928."

Amendment of section 109. 5. In section 109 of the said Act the following words will be added at the end of clause (*a*) of the proviso, viz., " irrespective of whether or not such application or suit was filed or instituted, or the same was finally disposed of before or after the commencement of the Bengal Tenancy Amendment Act, IV of 1928."

Amendment of section 158A. 6. In section 158A the following proviso will be added at the end of clause (*l*), viz., " provided that in any area for which a record-of-rights has not yet been prepared or finally published the landlord, if he be a proprietor or permanent tenure-holder, may also so apply for the application of the procedure provided by the Public Demands Recovery Act, 1913, in cases where the rent is secured by registered lease containing all necessary particulars of the tenancy such as are required by clause (*b*) of section 148 and section 162 of this Act. Ben. Act III of 1913.

STATEMENT OF OBJECTS AND REASONS.

Section 48C requires an amendment to make clear the intention of the Legislature to give the *under-raiyat* the benefit of the protection now afforded by the proviso in all cases not yet finally decided including cases now pending in the original court or in a court of appeal or cases not yet instituted where notice was given under the old section 49 of the Bengal Tenancy Act. This has been rendered necessary by reason of the decision of a Special Bench of the Calcutta High Court reported in 37 C. W. N. 689, on a difference of opinion between two other Judges of the said court.

The amendment of section 109 is equally urgent and imperative to make clear a similar intention of the Legislature to apply the proviso in all cases not yet finally decided including cases pending either in the original court or in a court of appeal or cases not yet instituted, for it may be a question open to some doubt as to whether the Legislature intended to disturb rights that might be said to have already accrued under the old section 109 by reason of a final disposal even by default or withdrawal of an application or suit before the commencement of the Amending Act. (*Vide* 35 C. W. N. 1147.)

The proposed amendment of section 158A is to facilitate recovery of rents and cesses by proprietors and permanent tenure-holders so as to enable them to pay up in time the land revenue or cess of putni rents which are recoverable by summary processes. The information afforded by a record-of-rights could also be had with equal if not greater safety in cases secured by a registered lease containing all necessary particulars.

KISHORI MOHAN CHAUDHURI,
Member-in-charge.

The 17th November, 1934.

J. W. McKAY,
Secy. to the Bengal Legis. Council.

BENGAL LEGISLATIVE COUNCIL DEPARTMENT.

NOTIFICATION.

No. 295L.C.—11th January, 1935.—In pursuance of the provisions of rule 20 of the Bengal Legislative Council Rules, 1920, the following Bill which was introduced in the Bengal Legislative Council on the 14th December, 1934, is hereby published for general information together with the Statement of Objects and Reasons annexed thereto.

THE BENGAL TENANCY (AMENDMENT) BILL, 1934.

A

BILL

further to amend the Bengal Tenancy Act, 1885.

Preamble.

WHEREAS it is expedient further to amend the Bengal Tenancy Act, 1885, in the manner hereinafter appearing; VIII of 1885.

AND WHEREAS the previous sanction of the Governor General has been obtained under sub-section (*3*) of section 80A of the Government of India Act to the passing of this Act; 5 and 6 Geo. V, c. 61; 6 and 7 Geo. V, c. 37; 9 and 10 Geo. V, c. 101.

It is hereby enacted as follows :—

Short title.

1. This Act may be called the Bengal Tenancy (Amendment) Act, 1934.

2. It shall come into force at once.

3. After section 148, clause (*h*), the following be added as clause (*h1*) :—

"No fresh appointment of any natural or Court guardian would be necessary in execution cases arising out of the original suits where guardian has already been appointed."

STATEMENT OF OBJECTS AND REASONS.

After amendment of Act VIII of 1885 in the year 1928 some inconvenience is experienced in execution cases. Some Courts in the mufassal insist upon the appointment of fresh natural guardian or Court guardian for the minors in execution cases as a result whereof poor tenants are unnecessarily saddled with costs for the same and delay is caused in the disposal of execution cases. Objects of this amending Bill is to remove that difficulty for the benefit of the poor tenant judgment debtors.

KISHORI MOHAN CHAUDHURI,

Member-in-charge.

The 5th November, 1934.

J. W. MCKAY,

Secy. to the Bengal Legis. Council.

BENGAL LEGISLATIVE COUNCIL DEPARTMENT.

NOTIFICATION.

No. 304L.C.—12th January, 1935.—In pursuance of the provisions of rule 20 of the Bengal Legislative Council Rules, 1920, the following Bill which was introduced in the Bengal Legislative Council on the 14th December, 1934, is hereby published for general information together with the Statement of Objects and Reasons annexed thereto.

THE BENGAL FERRIES (AMENDMENT) BILL, 1934.

A

BILL

to amend the Bengal Ferries Act, 1885.

WHEREAS it is expedient to amend the Bengal Ferries Act, 1885, in the manner hereinafter appearing;

It is hereby enacted as follows :—

Short title.

1. This Act may be called the Bengal Ferries (Amendment) Act, 1934.

Extent and commencement.

2. It extends to the whole of Bengal.

And it shall come into force at once.

Amendment of section 9 of Ben. Act I of 1885.

3. At the end of section 9 of the Bengal Ferries Act, 1885, the words " provided such term shall not exceed three years " shall be added.

STATEMENT OF OBJECTS AND REASONS.

The object of this short amendment is to fix the maximum limit to the period to which a ferry should be leased. In some places the ferries are leased to farmers for long periods, namely, 10 to 15 years. In the district of Mymensingh the first class ferries have been leased for 15 years and the second class ferries have been leased for 10 years to a very rich ferry farmer. A great deal of exaction and exploitation is committed by these long termed ferry farmers upon the ignorant and helpless passengers during this long period in respect of ferry charges to be realised on goods and conveyances such as *dulis*, carts and *palanquins*, etc. Monopoly of any trade is harmful to the best interest of people at large. It is also financially injurious to the best interest of District Boards themselves. This power of granting long lease has been instrumental to scaring away the small farmers making rooms for only big ones with big purses.

Another reason for this amendment is that a Board should not be allowed to tie the hands of its successor in respect of the management of the Board's finance. This practice of allowing one Board to forestall the actions of a succeeding Board is bound to interfere with the efficient management of a Board and is against the principle of electing a new Board every third year or fourth year. If one Board is allowed to tie down the financial hand of all future Boards, where is the necessity of having a new Board few years after ?

In the opinion of the mover a lease for a term not exceeding three years will be best suited to the legitimate interest of District Boards and ferry farmers alike.

ABDUL HAKIM,
Member-in-charge.

The 30th November, 1934

J. W. McKAY,
Secy. to the Bengal Legis. Council.

BENGAL LEGISLATIVE COUNCIL DEPARTMENT.

NOTIFICATION.

No. 305L.C.—12th January, 1935.—In pursuance of the provisions of rule 20 of the Bengal Legislative Council Rules, 1920, the following Bill which was introduced in the Bengal Legislative Council on the 14th December, 1934, is hereby published for general information together with the Statement of Objects and Reasons annexed thereto.

THE BENGAL TENANCY (AMENDMENT) BILL, 1934.

A

BILL

further to Amend the Bengal Tenancy Act, 1885.

WHEREAS it is expedient to amend the Bengal Tenancy Act, 1885, in the manner hereinafter appearing ; VIII of 1885.

AND WHEREAS the previous sanction of the Governor General has been obtained under sub-section (*3*) of section 80A of the Government of India Act to the passing of this Act ; 5 & 6 Geo. V. c. 61 ; 6 & 7 Geo. V. c. 37 ; 9 & 10 Geo. V. c. 101.

It is hereby enacted as follows :—

Short title.

1. This Act may be called the Bengal Tenancy (Amendment) Act, 1934.

Amendment of section 23 of Act VIII of 1885.

2. To section 23 of the Bengal Tenancy Act, 1885 (hereinafter referred to as the said Act), the following explanation shall be added, namely :—

" *Explanation.*—Erection of a mosque, temple, church or any other place of private or public worship, whether of masonry, bricks, stone or any other material whatsoever, shall not be deemed to render the land unfit for the purposes of the tenancy."

Amendment of section 44.

3. In section 44 of the said Act after clause (*b*), the following proviso shall be inserted, namely :—

" Provided that the erection of a mosque, temple, church or any other place of private or public worship, whether of masonry, bricks, stone or any other material whatsoever, shall not be deemed to render the land unfit for the purposes of the tenancy."

Amendment of section 48C.

4. In section 48C of the said Act after clause (*b*), the following proviso shall be inserted, namely :—

" Provided that the erection of a mosque, temple, church or any other place of private or public worship, whether of masonry, bricks, stone or any other material whatsoever, shall not be deemed to render the land unfit for the purposes of the tenancy."

STATEMENT OF OBJECTS AND REASONS.

In the case of Srish Chandra Ganguly *vs.* Essom Mussalli and others, reported in 38 C. W. N., page 93, the Calcutta High Court has held that the erection of a mosque or any other place of public worship in a plot of land comprised in an agricultural holding is a misuse of the land and that in such a case the landlord is entitled to have a decree for ejectment under section 155 of the Bengal Tenancy Act.

Right of worship is an elementary right of man. Erection of a place of worship is only a corollary to that right. It is deplorable if certain provisions in the Bengal Tenancy Act admit of interpretation that militates against this elementary principle. Such provisions require immediate change. The proposals in this Bill are formulated with a view to remove any doubt about this primary right of the Bengal tenant.

FARIDPUR,
The 29th October, 1934.

TAMIZUDDIN KHAN,
Member-in-charge.

J. W. McKAY,
Secy. to the Bengal Legis. Council.

BENGAL LEGISLATIVE COUNCIL
DEPARTMENT.

NOTIFICATION.

No. 306L.C.—12th January, 1935.—In pursuance of the provisions of rule 20 of the Bengal Legislative Council Rules, 1920, the following Bill which was introduced in the Bengal Legislative Council on the 14th December, 1934, is hereby published for general information together with the Statement of Objects and Reasons annexed thereto.

THE BENGAL MEDICAL (AMENDMENT) BILL, 1934.

A
BILL

further to amend the Bengal Medical Act, VI of 1914.

WHEREAS it is expedient further to amend the Bengal Medical Act VI of 1914, for the purposes hereinafter appearing ; 5 & 6, Geo. V, c. 61 ;

AND WHEREAS the previous sanction of the Governor General has been obtained under sub-section (3) of section 80A of the Government of India Act to the passing of this Act ; 6 & 7, Geo. V, c. 37 ; 9 & 10, Geo. V, c. 101.

It is hereby enacted as follows :—

Preliminary.

Short title, extent and commencement.

1. (*a*) This Act may be called the Bengal Medical (Amendment) Act, 1934.

(*b*) It shall extend to the whole of Bengal.

(*c*) It shall come into force immediately.

Amendment of section 17.

2. (*i*) In section 17 insert the following as the first proviso, *viz.*—

"(*1*) Provided that the Governor in Council may after consulting the Medical Council permit the registration of :—

(*a*) any person who possesses a diploma or a certificate of any medical institution and was practising as a medical practitioner on the date when the Act came into force ; and

(*b*) any person who has obtained proper training in any medical institution and joined the medical profession before the 5th September, 1933."

(*ii*) In proviso to section 17 between the word "Provided" and the words "that the Council may," the word "also" shall be inserted.

STATEMENT OF OBJECTS AND REASONS.

From some time past it has been felt that the provisions of the Bengal Medical Act, 1914, are causing much hardship to a large number of persons who, though properly trained and possessed of degrees, diplomas, certificates, etc., from sources other than those recognised by the authorities and though they had been actually practising Medicine, Surgery and Midwifery from before 1914, cannot get themselves registered and thus become qualified medical practitioners. Practitioners with similar qualification in other provinces, *viz.*, Bombay, the Punjab, the United Provinces, Burma, etc., have been given the privilege of registration long ago either by amendments of the Acts of the respective provinces or by Government notification. In Bengal nothing in this direction has been done up-to-date. These practitioners of Bengal have therefore formed themselves into a corporate body under the name and style of *the Bengal Medical Union* and have been making representations which should not be ignored altogether. The redress sought for may be given by a simple amendment of the Bengal Medical Act and it is the object of the present Bill to make the amendment.

The Bengal Medical Act, 1914, in seeking to give protection to the public against quacks, omitted to make provision for the safety of those doctors who had obtained diplomas and certificates from various well-organised and efficient medical institutions before the passing of the Act, who had been practising with ability and reputation for a long time and who could by no stretch of language be called quacks. Yet, in the result these able, experienced and well-reputed doctors have been classed among the quacks. Many of them have been thrown out of employ from Hospitals, Tea Gardens, Ships, Steamers, etc., debarred from granting certificates of birth, death, or of illness and handicapped in many other ways. Their difficulties increased when the Poisons Act XII of 1919 came into force and prohibited them from procuring for their patients, the requisite drugs included in the schedule of poisons. The transitory provision by Government for an examination of these doctors by the State Medical Faculty was in force only for two years from the passing of the Bengal Medical Act, 1914. The time was too short for the majority to avail themselves of the concession, and moreover a good many did not even get the necessary information within the period. Such people are now on the brink of starvation. Many of them have outgrown the age at which a change of avocation is possible, and for obvious reasons, a fresh examination also is out of the question. The proposed proviso (*1*) (*a*) of the Bill is intended to meet the cause of the people.

The case of those who have obtained proper training in unrecognised medical institutions since 1914 stands on the same footing. Several unregistered doctors are serving in Tea Garden, Coal Mines, etc., and they have been highly spoken of by their superior highly qualified Indian and European Medical Officers. There are many who have been practising with greater reputation than their registered brethern of the profession in the rural areas. Some of these non-recognised institutions have since been recognised, but the students who completed their course therein and began to practise before such recognition have been left in the lurch. We therefore find good doctors trained at the same institution, one set of whom, —the older and more experienced set,—all unqualified for want of registration, while another set all qualified by registration. It is equitable under the circumstances to give such students at least one chance of being qualified. Hence the necessity for proviso (*1*) (*b*).

JITENDRALAL BANNERJEE,

The 3rd November, 1934. *Member-in-charge.*

J. W. McKAY,

Secy. to the Bengal Legis. Council.

BENGAL LEGISLATIVE COUNCIL DEPARTMENT.

NOTIFICATION.

No. 307L.C.—12th January, 1935.—In pursuance of the provisions of rule 20 of the Bengal Legislative Council Rules, 1920, the following Bill which was introduced in the Bengal Legislative Council on the 14th December, 1934, is hereby published for general information together with the Statement of Objects and Reasons annexed thereto.

THE BENGAL MUNICIPAL (AMENDMENT) BILL, 1934.

A

BILL

to amend the Bengal Municipal Act, 1932 (Bengal Act XV of 1932).

WHEREAS it is expedient to amend the law relating to Municipalities in Bengal.

AND WHEREAS the previous sanction of the Governor General has been obtained under sub-section (*3*) of section 80A of the Government of India Act to the passing of this Act ; 5 & 6 Geo. V, c 61 ; 6 & 7 Geo. V, c. 37 ; 9 & 10 Geo. V, c. 101.

It is hereby enacted as follows :—

Preliminary.

Short title and commencement.

1. This Act may be called the Bengal Municipal (Amendment) Act, 1934.

Qualification of Commissioners and voters.

2. (*a*) For the words " lives in " in the fourteenth line of section 23 (*2*) (*c*) the word " occupies " shall be substituted.

(*b*) For the word " member " in the first line of sub-section (*5*) (*i*) the words " Co-sharer " shall be substituted.

Election of Chairman.

3. The words " one of the rest to be Vice-Chairman " shall be added after the word " Chairman " in sub-section (*1*) of section 45.

Powers of Chairman.

4. The words " which is consistent with the Act " shall be inserted after the word " meeting " in the third line of the proviso of sub-section (*1*) of section 51.

Vacation of office by Chairman and Vice-Chairman after general election.

5. In the last line of the first paragraph of sub-section (*2*) of section 59, the words " the Chairman thus elected shall preside over election of the Vice-Chairman " shall be inserted after the word " and " and the words " a Vice-Chairman " shall be deleted.

Execution of contract.

6. The following proviso shall be added to section 103 (*2*) " provided that in cases of the Howrah, Dacca and Chittagong Municipalities the amount shall be five hundred rupees in place of rupees two hundred. "

Annual estimates to be prepared.

7. For the word " three " in the third line of sub-section (*1*) of section 112, the word " two " shall be substituted.

Amendment and alteration of list.

8. (*a*) The words " through mistake, oversight or fraud " shall be inserted after the word " assessed " in section 138 (*1*) (*c*).

(*b*) For the words " one month's " in the first line of sub-section (*2*) of section 138 the words " 15 days " shall be substituted.

Application for review.

9. In sub-section (*2*) of section 148 the words " or after the expiration of one month from the date of service of the first notice of demand for payment at the rate " shall be omitted.

Officer may break open door.

10. For the word " reasonable " in the proviso of section 158 the words " one hour's " shall be substituted.

Amendment of section 165.

11. The provisos of section 165 shall be deleted.

STATEMENT OF OBJECTS AND REASONS.

1. Practical difficulties are being experienced regarding some sections of the Bengal Municipal Act, 1932, which are now necessary to be amended as per reasons noted below :—

2. (*a*) It has been contested in the election suits in connection with the last election of the Commissioners of the Dacca Municipality that many men having academical qualifications were enlisted as voters though actually they did not live there but at the time of election voted. The substitution of the word " occupy " will remove the above difficulty to some extent and this was the provision of the old rules also.

(*b*) This suggestion is made to avoid the vague meaning of the word " member " which may include sons and grandsons, nephews, etc., of a joint family.

3. The outgoing Chairman of the Dacca Municipality gave notice for election of Chairman only under section 45 (*1*) but under section 59 (*2*) the election of both Chairman and Vice-Chairman shall be made at the first meeting. There was great controversy over the matter. This suggestion is made to make it consistent with section 59 (*2*) and to avoid the ambiguity.

4. This is suggested so that the Municipal Commissioners may not pass any illegal resolution which according to the present wording of the section the Chairman will be bound to carry out.

5. This suggestion is made to make it consistent with the existing Government rules for the election of Chairman and Vice-Chairman.

6. If this is not done in big Municipalities like Howrah, Dacca and Chittagong innumerable urgent works will have to be detained for sanction of the meeting and acceptance of tenders at the meeting. So for the facility of work this suggestion is made.

7. This is suggested to give the actual figures of receipt and expenditure for nine months (*i.e.*, three complete quarters). This was the provision of the old Act also.

8. (*a*) The existing sub-section is a dangerous one. Any case already decided by a sub-committee, can be open to reassessment by the Chairman of the Municipality. The insertion of words " through mistake, oversight or fraud " has been suggested to make it consistent with section 108 of the Old Act of 1884.

(*b*) The suggestion is made to expedite the progress of the work otherwise there will be unnecessary delay.

9. A notice under section 147 (*2*) is quite enough for the party to file objection. This provision is redundant.

10. The word " reasonable " is a vague one. To avoid dispute and litigation, a definite hour should be mentioned.

11. The words " of any movable property belonging to any other person " in section 156 will have no meaning if the provisos are retained. Moreover, this will remove difficulty in realising taxes, particularly from the female owners of a rented holding whose whereabouts are unknown and whose movable property is not sufficient to cover the taxes due. This suggestion is made to make it consistent with section 156.

SATYENDRA KUMAR DAS,

The 22nd November, 1934. *Member-in-charge.*

J. W. McKAY,

Secy. to the Bengal Legis. Council.

BENGAL LEGISLATIVE COUNCIL DEPARTMENT.

NOTIFICATION.

No. 308L.C.—12th January, 1935.—It is hereby notified for general information that at the meeting of the Bengal Legislative Council held on the 14th December, 1934, a motion was carried that the Bengal Municipal (Amendment) Bill, 1934, by Rai Bahadur Satyendra Kumar Das, M.L.C., be circulated for the purpose of eliciting opinion thereon by the 1st April, 1935. Expressions of opinion by public bodies or by individuals interested in the said Bill, which is published together with its Statement of Objects and Reasons in this gazette, should be sent so as to reach the undersigned before that date.

J. W. McKAY,

Secy. to the Bengal Legis. Council

Registered No. C207

No. 3 of 1935

The Calcutta Gazette

THURSDAY, JANUARY 17, 1935.

CONTENTS:

	Page.
Finance Statements of Provincial and Central Co-operative Banks in the Presidency of Bengal for the quarter ending 30th September 1934	39—63
Return of Vital Statistics for the month of May 1934	64—69
Monthly Weather and Crop Report of Bengal for December 1934 ..	70
Weather and Crop Report for the week ending 9th January 1935	71—74
Prices-current (wholesale and retail) of food-grains, salt, etc., in the districts of Bengal for the second half of December 1934	75—78
Vital Statistics of towns of Bengal for the weeks ending 22nd and 29th December 1934 and 5th January 1935	79—81
Statements showing water-levels of certain rivers in Bengal for the months of May to September 1934	82—91
Statement under the Cotton Ginning and Pressing Factories Act, 1925 .	92
Statements of weekly gauge readings on certain rivers in Bengal	92—94
Abstract statement showing the approximate volume of traffic and tollage on canals in Bengal classed as Major and Minor Works and Navigation for the month of November 1934	95

SUPPLEMENT.

Official Papers.

DEPARTMENT OF CO-OPERATIVE SOCIETIES, BENGAL.

Finance Statements of Provincial and Central Co-operative Banks in the Presidency of Bengal for the quarter ending 30th September 1934.

NOTIFICATION.

No. 14505.—14th December 1934.—The accompanying Finance Statements of Provincial and Central Co-operative Banks in the Presidency of Bengal for the quarter ending September 1934 are published for general information.

A. M. ARSHAD ALI,

Registrar of Co-operative Societies, Bengal (offg.).

CENTRAL

Quarterly Finance

PART

Name of Bank.	Liabilities and Outside the movement.					
	Deposits, fixed, current or Savings Bank, by non-members or by members in an individual capacity.	Debentures.	Overdrafts from outside Banks, *e.g.*, Presidency or Joint Stock.	Other items.	Fixed deposits or loans received from— Provincial Bank.	Fixed deposits or loans received from— Central Banks or Societies.
1	2	3	4	5	6(*a*)	6(*b*)
	Rs.	Rs.	Rs.	Rs.	Rs.	Rs.
I.—PROVINCIAL BANK.						
The Bengal Provincial Co-operative Bank, Ltd. ..	1,33,67,086	..	23,029	22,117	..	31,97,498
II.—CENTRAL BANKS.						
Calcutta.						
Central Co-operative Anti-Malarial Society, Ltd. ..	..	..	..	..	..	..
Co-operative Milk Societies Union, Ltd. ..	27,376	..	..	..	..	..
District 24-Parganas.						
Taki Central Co-operative Bank, Ltd. ..	2,73,563	..	..	7,495	80,000	3,904
Nimta Central Co-operative Bank, Ltd. ..	30,711	..	..	..	..	..
Diamond Harbour Central Co-operative Bank, Ltd.	63,795	..	..	..	1,500	..
Barasat Central Co-operative Bank, Ltd. ..	1,88,020	..	..	..	..	1,010
Gosava Central Co-operative Bank, Ltd. ..	57,225	..	..	..	..	..
District Nadia.						
Nadia Central Co-operative Bank, Ltd. ..	6,70,729	..	..	..	..	1,526
Kushtia Central Co-operative Bank, Ltd. ..	2,06,022	6,260	..	7,000	1,80,100	43,900
Meherpur Central Co-operative Bank, Ltd. ..	2,45,648	..	..	..	..	..
Ranaghat Central Co-operative Bank, Ltd. ..	2,23,683	..	..	2,534	..	1,905
Chuadanga Central Co-operative Bank, Ltd. ..	2,00,074	..	..	1,848	9,000	6,172
District Jessore.						
Jessore Central Co-operative Bank, Ltd. ..	5,57,125	..	..	4,712	..	5,065
Magura Central Co-operative Bank, Ltd. ..	5,60,578	..	..	..	25,000	..
Narail Central Co-operative Bank, Ltd. ..	3,59,129	..	..	3,306	51,000	5,621
Jhenidah Central Co-operative Bank, Ltd. ..	14,005	..	..	..	..	10,175
District Khulna.						
Khulna Central Co-operative Bank, Ltd. ..	4,73,948	..	..	6,065	..	10,889
Bagerhat Central Co-operative Bank, Ltd. ..	2,56,360	..	..	2,663	..	2,014
Raruli Central Co-operative Bank, Ltd. ..	1,94,526	..	..	5,249	..	7,445
District Murshidabad.						
Jangipur Central Co-operative Bank, Ltd. ..	1,71,254	..	..	..	..	..
Berhampore Central Co-operative Bank, Ltd. ..	9,39,695	..	..	10,488	..	9,320
Lalbagh Central Co-operative Bank, Ltd. ..	2,52,922	..	..	..	12,350	20,840
Kandi Central Co-operative Bank, Ltd. ..	1,05,330	..	..	..	32,500	24,088
District Howrah.						
Howrah Central Co-operative Bank, Ltd. ..	..	..	..	..	..	..
Uluberia Central Co-operative Bank, Ltd. ..	34,543	..	..	..	..	100
District Hooghly.						
Hooghly Central Co-operative Bank, Ltd. ..	8,07,892	..	..	273	..	1,07,681
Arambagh Central Co-operative Bank, Ltd.	15,606	..	..	..	..	37,800

BANKS.

Statement.

I.

quasi-liabilities.							Assets and quasi-assets.	
Within the movement.							Outside the movement.	
Drawn portion of cash credit with Provincial Bank.	Savings Bank or current accounts held in favour of Societies or Central Banks.	Reserve fund of Bank itself.	Paid-up share capital.	Other items.	Undrawn liabilities, *e.g.*, cash credit accounts guaranteed by the Provincial Banks to Central Banks or to Societies and by Central Banks to other Central Banks or Societies.		Cash in hand and in outside Banks.	Government paper.
					To cover deposits.	For loans transaction.		
7	8	9	10	11	12	13	14	15
Rs.	Rs.	Rs.	Rs.	Rs.	Rs.	Rs.	Rs.	Rs.
..	32,77,116	4,00,077	16,95,350	22,31,338	..	71,506	25,267	87,90,565
..	..	11,368	..	..	..	..	43	36,000
6,000	30,017	67,885	13,810	56,220	..	..	2,598	190
..	2,361	31,728	73,280	7,440	..	..	3,341	12,519
..	..	3,025	3,115	6,696	..	..	7,799	..
..	..	6,014	14,789	13,483	..	..	1,766	..
..	3,156	27,000	21,915	4,577	..	..	2,259	..
..	..	1,961	4,675	8,431	..	16	..	..
..	..	17,653	45,025	21,835	..	..	17,234	..
..	3,162	34,530	57,930	18,561	..	..	93	..
..	1,604	16,500	57,050	29,002	..	..	5,782	..
..	5,427	10,526	30,580	18,495	..	..	3,391	8,800
9,486	8,129	8,628	22,810	21,428	..	..	510	..
..	..	50,000	69,525	39,873	..	..	746	805
17,836	..	32,000	56,925	53,406	..	..	3,504	..
..	72	18,400	46,290	33,389	..	..	556	..
..	..	1,000	4,235	770	..	..	175	..
..	5,091	28,750	64,845	55,017	4,496	..	6,691	..
..	5,154	12,776	38,340	27,762	..	..	1,705	..
..	1,314	16,600	31,780	56,336	..	..	3,643	10,000
..	348	15,946	34,555	15,065	..	..	1,425	..
..	..	31,000	53,220	60,703	..	..	2,935	10,000
..	..	12,330	31,336	3,596	..	..	10	..
..	..	750	20,710	7,714	..	..	745	..
..	376	1,050	4,510	3,157	..	..	31	..
..	..	1,020	4,700	163	..	..	195	..
..	18,014	9,701	63,865	35,984	..	..	6,520	1,075
..	..	2,453	8,900	800	..	..	2,005	..

CENTRAL

Quarterly Finance

PART

Name of Bank.	Assets and					
	Outside the movement.					
	Post Office Savings Bank deposits.	Other investments of a liquid nature in outside concerns.	Undrawn balance of assured cash credit.		Loans to Agricultural Societies.	Loans to non-Agricultural Societies.
			With Presidency or Joint Stock Bank.	With Provincial Bank.		
	16	17	18	19	20	21
	Rs.	Rs.	Rs.	Rs.	Rs.	Rs.
I.—PROVINCIAL BANK.						
The Bengal Provincial Co-operative Bank, Ltd. ..	..	..	38,76,021	..	26,75,458	8,69,722
II.—CENTRAL BANKS.						
CALCUTTA.						
Central Co-operative Anti-Malarial Society, Ltd. ..	..	35,000	..	..	..	..
Co-operative Milk Societies Union, Ltd. ..	..	..	..	12,000	..	5,809
DISTRICT 24-PARGANAS.						
Taki Central Co-operative Bank, Ltd.	134	2,158	..	..	3,58,141	31,630
Nimta Central Co-operative Bank, Ltd. ..	3	..	..	..	19,558	..
Diamond Harbour Central Co-operative Bank, Ltd.	256	..	..	..	35,423	10,106
Barasat Central Co-operative Bank, Ltd.	54	..	..	..	1,82,697	..
Gosava Central Co-operative Bank, Ltd. ..	..	..	..	..	18,661	22,655
DISTRICT NADIA.						
Nadia Central Co-operative Bank, Ltd. ..	..	13,000	..	..	4,41,533	6,528
Kushtia Central Co-operative Bank, Ltd. ..	11	..	..	..	4,37,414	..
Meherpur Central Co-operative Bank, Ltd. ..	5,502	..	..	..	1,94,588	4,056
Ranaghat Central Co-operative Bank, Ltd. ..	3,000	4,042	..	..	1,72,503	..
Chuadanga Central Co-operative Bank, Ltd. ..	172	..	..	514	1,66,219	18,210
DISTRICT JESSORE.						
Jessore Central Co-operative Bank, Ltd. ..	14,317	..	..	..	4,23,115	1,421
Magura Central Co-operative Bank, Ltd. ..	177	..	..	7,163	4,23,876	1,400
Narail Central Co-operative Bank, Ltd. ..	2,400	..	..	..	3,44,990	..
Jhenidah Central Co-operative Bank, Ltd. ..	69	..	..	..	26,296	..
DISTRICT KHULNA.						
Khulna Central Co-operative Bank, Ltd. ..	..	..	..	..	..	31,124
Bagerhat Central Co-operative Bank, Ltd. ..	5,100	..	..	..	2,31,492	6,733
Raruli Central Co-operative Bank, Ltd. ..	20,304	..	..	..	2,01,814	13,233
DISTRICT MURSHIDABAD.						
Jangipur Central Co-operative Bank, Ltd. ..	5,337	..	..	..	1,78,929	6,814
Berhampur Central Co-operative Bank, Ltd.	5,161	..	..	..	3,16,287	4,192
Lalbagh Central Co-operative Bank, Ltd. ..	115	..	..	..	2,18,728	4,742
Kandi Central Co-operative Bank, Ltd. ..	6,764	..	..	..	1,38,538	2,500
DISTRICT HOWRAH.						
Howrah Central Co-operative Bank, Ltd. ..	354	..	..	..	..	..
Uluberia Central Co-operative Bank, Ltd. ..	15	..	..	..	22,753	1,020
DISTRICT HOOGHLY.						
Hooghly Central Co-operative Bank, Ltd. ..	750	..	..	..	3,81,626	430
Arambagh Central Co-operative Bank, Ltd. ..	1,702	..	..	..	58,813	..

BANKS.

Statement.

I.—*continued.*

quasi-assets.

Within the movement.					Net profit of past year.	Rates of interest on which money is usually—		Last dividend declared.
Loans or deposits due to the Central Bank by the Provincial Bank or other Central Banks.	Loans and deposits due to Provincial Bank by Central Banks.	Uncalled share capital.	Guaranteed share capital.	Other investments inside the movement.		Borrowed.	Lent.	
22	23	24	25	26	27	28	29	30
Rs.	Rs.	Rs.	Rs.	Rs.	Rs.	Per cent.	Per cent.	Per cent.
..	1,02,69,291	16,35,350	..	..	83,596	2 to 5	7½ to 8½	No dividend.
7,800	..	..	..	7,000	..	..	..	..
32,640	..	..	..	16,644	283	2½ to 8½	12½	..
9,531	..	..	..	18,750	7,296	2 to 8	10½ to 12	..
14,857	..	3,115	..	1,492	462	3½ to 5½	10 15/16	6½
..	..	15,634	..	11,900	2,096	4 to 7½	10 11/16 to 12½	..
..	..	26,320	..	46,251	6,121	3½ to 6	10 15/16	6
33,482	..	4,675	..	315	858	3½ to 5	7½ to 9½	9½
91,662	..	67,560	..	2,450	5,138	2 to 6	7½ to 10½	6½
..	..	57,930	..	..	7,898	3 to 8	12	..
..	..	52,247	..	..	4,227	4 to 6½	9½ to 10½	3½, 6½
70,566	..	30,580	..	3,350	5,295	3½ to 7½	9½ to 12½	..
..	..	23,725	..	10,575	915	7 to 8½	9½ to 12½	.
1,83,495	..	69,525	..	3,043	13,400	3 to 6½	8 to 11½	6½
85,820	..	1,350	..	250	11,278	3½ to 7	9½ to 12½	..
1,360	..	48,810	..	23,664	9,822	2½ to 7½	9½ to 14 1/16	6½
..	..	7,515	..	900	638	7 to 8½	12½	..
1,21,203	..	11,055	..	47,036	17,128	3 to 6	7 to 10	3, 6½
26,654	..	49,860	..	23,158	1,655	3½ to 6½	9½ to 10 15/16	..
15,727	..	..	..	24,588	3,091	3 to 6½	10 15/16	..
11,288	..	41,285	..	214	3,277	3½ to 7½	10½	Not declared.
6,47,631	..	34,680	..	4,044	10,040	3 to 5	9½ to 10 15/16	6½
..	..	32,894	..	..	731	3 to 6	9½ to 12½	3½ & 5½
5,935	..	24,090	..	11,950	2,305	4 to 7½	9½ to 11 15/16	6
2,316	..	22,940	..	..	160	..	9½	..
17,768	..	4,760	..	..	778	3 to 6	10 15/16, 12½	..
5,84,619	..	67,235	..	24,536	11,683	3 to 4½	8½ to 10	6½
..	..	8,920	..	..	761	6½ so 7½	10½ to 10 15/16	..

PART

Name of Bank.	Liabilities and Outside the movement.					
	Deposits, fixed, current or Savings Bank, by non-members or by members in an individual capacity.	Debentures.	Overdrafts from outside Banks, e.g., Presidency or Joint Stock.	Other items.	Fixed deposits or loans received from— Provincial Bank.	Fixed deposits or loans received from— Central Banks or Societies.
1	2	3	4	5	6(a)	6(b)
II.—CENTRAL BANKS—*contd.*	Rs.	Rs.	Rs.	Rs.	Rs.	Rs.
DISTRICT BANKURA.						
Bankura Central Co-operative Bank, Ltd. ..	4,30,675	..	..	..	..	..
Bankura District Co-operative Industrial Union, Ltd.	40,827	..	..	4,232	..	..
Bishnupur Central Co-operative Bank, Ltd. ..	17,007	..	..	..	..	..
DISTRICT BIRBHUM.						
Rampurhat Central Co-operative Bank, Ltd. ..	3,93,022	..	..	3,798	..	11,692
Birbhum Central Co-operative Bank, Ltd. ..	4,86,995	..	..	4,089	..	1,000
Viswavarati Central Co-operative Bank, Ltd. ..	1,70,860	..	..	..	10,000	50,000
Nalhati Central Co-operative Bank, Ltd. ..	1,74,837	..	..	3,014	..	1,33,515
DISTRICT MIDNAPORE.						
Midnapore Central Co-operative Bank, Ltd. ..	6,15,894	..	..	56,605	..	8,130
Khelar Balarampore Central Co-operative Bank, Ltd.	1,41,901	..	..	1,032	..	..
Belebera Central Co-operative Bank, Ltd. ..	82,582	..	..	437	..	15,013
Tamluk Central Co-operative Bank, Ltd. ..	6,17,162	..	..	..	..	1,500
Mugberia Central Co-operative Bank, Ltd. ..	64,364	..	..	..	50,000	35,674
Balagoria Central Co-operative Bank, Ltd. ..	80,503	..	..	590	15,720	24,835
Ghatal Central Co-operative Bank, Ltd. ..	64,862	..	..	..	10,000	32,694
DISTRICT BURDWAN.						
Kalna Central Co-operative Bank, Ltd. ..	2,97,036	..	..	..	..	18,916
Burdwan Central Co-operative Bank, Ltd. ..	25,96,132	..	..	8,956	..	..
Katwa Central Co-operative Bank, Ltd. ..	59,964	..	..	..	..	80,189
Asansol Central Co-operative Bank, Ltd. ..	70,716	..	..	..	..	..
DISTRICT DACCA.						
Dacca Central Co-operative Bank, Ltd. ..	8,85,789	..	..	..	..	..
Narayanganj Central Co-operative Bank, Ltd. ..	2,39,621	..	..	5,251	4,50,000	..
Manikganj Central Co-operative Bank, Ltd. ..	2,33,349	..	..	..	79,600	..
Bikrampur Central Co-operative Bank, Ltd. ..	68,955	..	..	2,109	1,30,000	..
Raipura Central Co-operative Bank, Ltd. ..	1,46,269	..	..	..	6,85,300	..
Tangi Central Co-operative Bank, Ltd. ..	1,06,644	..	..	..	1,09,000	..
Baira Central Co-operative Bank, Ltd. ..	17,446	..	..	..	1,10,000	7,500
Ichhapura Central Co-operative Bank, Ltd. ..	31,741	..	..	..	52,800	14,330
Kaliganj Central Co-operative Bank, Ltd. ..	73,491	..	..	..	62,000	37,500
Dacca Co-operative Industrial Union, Ltd. ..	2,921	..	..	..	4,18,516	..
Dacca Co-operative Milk Societies Union, Ltd. ..	2,589	..	..	2,750	10,720	3,000
DISTRICT MYMENSINGH.						
Mymensingh Central Co-operative Bank, Ltd. ..	17,59,111	..	2,80,725	..	4,04,000	47,210
Jamalpur Central Co-operative Bank, Ltd. ..	2,81,310	..	33,853	..	2,79,000	50,606
Tangail Central Co-operative Bank, Ltd. ..	3,29,366	..	..	..	3,40,000	10,773
Kishoreganj Central Co-operative Bank, Ltd. ..	2,18,064	..	..	..	1,65,000	6,996
Netrokona Central Co-operative Bank, Ltd. ..	64,459	..	..	..	2,99,700	4,700
Pingna Central Co-operative Bank, Ltd. ..	54,874	..	..	3,120	2,01,100	28,894
Madarganj Central Co-operative Bank, Ltd. ..	20,202	..	22,934	1,056	1,34,000	6,000
Dhanbari Central Co-operative Bank, Ltd. ..	4,505	..	..	1,364	1,67,000	22,000
Sarisabari Central Co-operative Bank, Ltd. ..	19,714	..	..	584	1,20,332	2,052
Gaffargaon Central Co-operative Bank, Ltd. ..	15,769	..	..	1,013	1,32,455	..
Bhairab Central Co-operative Bank, Ltd. ..	502	..	..	..	3,000	..
DISTRICT FARIDPUR.						
Faridpur Central Co-operative Bank, Ltd. ..	4,29,216	..	..	6,255	57,500	..
Madaripur Central Co-operative Bank, Ltd. ..	3,04,733	..	..	11,175	5,51,800	..
Gopalganj Central Co-opertaive Bank, Ltd. ..	2,95,034	..	..	4,081	..	..
Goalundo Central Co-operative Bank, Ltd. ..	2,94,678	..	..	160	..	..

I—*continued.*

quasi-liabilities.							Assets and quasi-assets.	
Within the movement.							Outside the movement.	
Drawn portion of cash credit with Provincial Bank.	Savings Bank or current accounts held in favour of Societies or Central Banks.	Reserve fund of Bank itself.	Paid-up share capital.	Other items.	Undrawn liabilities, *e.g.*, cash credit accounts guaranteed by the Provincial Banks to Central Banks or to Societies and by Central Banks to other Central Banks or Societies.		Cash in hand and in outside Banks.	Government paper.
					To cover deposits.	For loans transaction.		
7	8	9	10	11	12	13	14	15
Rs.	Rs.	Rs.	Rs.	Rs.	Rs.	Rs.	Rs.	Rs.
..	151	14,850	57,960	9,000	6,000	1,101	35,027	9,750
..	..	7,006	15,900	3,132	..	..	1,443	..
..	..	1,177	4,600	1,519	..	..	166	..
..	18,236	18,444	34,830	35,645	170	..	7,666	..
..	3,504	16,873	52,375	19,354	..	1,000	3,417	24,000
..	..	5,750	43,210	13,137	..	..	5,906	..
..	..	15,544	50,585	13,391	..	..	4,015	..
..	6,802	54,500	1,09,880	41,427	..	..	3,309	..
..	..	16,500	37,880	19,628	..	..	1,432	..
..	..	12,477	23,810	18,083	..	..	1,310	..
..	3,496	27,000	55,555	42,682	..	..	28,807	..
..	..	12,595	35,530	3,927	..	..	1,529	..
..	37	3,100	21,050	3,428	..	..	552	..
..	444	2,468	22,300	255	..	..	31	..
..	4,292	10,078	40,602	19,878	..	1,000	2,033	..
..	..	31,890	2,16,055	..	..	..	98,303	76,404
..	..	1,852	19,650	906	..	..	13,189	..
..	..	625	11,630	1,030	..	..	9,446	..
..	348	1,09,000	1,29,150	88,514	..	..	2,275	55,182
..	857	..	79,365	36,975	..	..	6,851	..
..	2,256	16,361	47,292	13,583	..	..	4,728	495
..	..	20,100	44,020	60,220	..	..	412	..
..	11	20,671	84,550	52,613	..	..	1,707	..
..	..	6,250	20,725	8,678	..	..	1,329	..
..	..	3,350	18,867	6,700	..	..	1,361	..
..	73	3,250	12,625	..	..	..	591	..
..	..	500	17,770	..	..	..	1,183	4,125
16,732	..	5,244	1,11,665	11,394	..	..	7,146	3,900
..	271	1,118	4,620	..	..	..	271	..
40,462	339	2,47,706	2,73,000	1,64,906	..	..	12,188	2,84,500
12,102	966	53,357	83,975	1,23,095	..	..	15,153	16,792
..	..	41,985	1,09,995	48,787	..	..	9,152	..
..	1,187	33,056	60,535	43,208	..	..	3,915	..
..	..	10,542	39,300	19,044	..	..	2,191	..
..	96	11,097	37,060	22,900	..	..	196	1,650
..	535	6,926	24,175	42,753	..	.	2,300	..
..	22	5,876	27,090	14,172	..	..	828	..
..	401	3,758	15,190	7,663	..	..	1,955	..
..	..	3,325	20,325	..	..	..	960	..
..	..	..	1,625	..	..	..	147	..
23,932	1,215	72,000	58,920	56,180	..	..	243	20,170
20,000	2,862	15,000	90,535	46,947	..	..	7,457	..
..	3,479	28,374	47,250	47,517	..	..	3,267	..
15,000	..	32,000	46,375	32,864	..	..	1,831	10,000

PART

Name of Bank.	Assets and Outside the movement.					
	Post office Savings Bank deposits.	Other investments of a liquid nature in outside concerns.	Undrawn balance of assured cash credit.		Loans to Agricultural Societies.	Loans to non-Agricultural Societies.
			With Presidency or Joint Stock Bank.	With Provincial Bank.		
	16	17	18	19	20	21
II.—CENTRAL BANKS—*contd.*	Rs.	Rs.	Rs.	Rs.	Rs.	Rs.
DISTRICT BANKURA.						
Bankura Central Co-operative Bank, Ltd. ..	10,000	303	..	..	2,18,575	421
Bankura District Co-operative Industrial Union, Ltd.	..	13,000	..	..	2,662	14,021
Bishnupur Central Co-operative Bank, Ltd. ..	92	..	..	..	15,618	1,254
DISTRICT BIRBHUM.						
Rampurhat Central Co-operative Bank, Ltd. ..	329	..	..	10,000	1,57,913	10,547
Birbhum Central Co-operative Bank, Ltd. ..	1,589	10,000	..	..	2,51,701	3,707
Viswavarati Central Co-operative Bank, Ltd. ..	669	..	..	..	2,05,854	3,937
Nalhati Central Co-operative Bank, Ltd. ..	1,557	..	..	..	3,09,663	4,628
DISTRICT MIDNAPORE.						
Midnapore Central Co-operative Bank, Ltd. ..	381	..	..	..	3,85,077	13,811
Khelar Balarampur Central Co-operative Bank, Ltd.	10,000	8,492	..	..	1,64,141	..
Belebera Central Co-operative Bank, Ltd.	8,238	..	..	..	1,21,367	..
Tamluk Central Co-operative Bank, Ltd. ..	4,468	434	..	..	3,01,925	3,663
Mugberia Central Co-operative Bank, Ltd. ..	1,084	..	..	..	1,64,271	..
Balagoria Central Co-operative Bank, Ltd. ..	6,015	..	..	..	1,18,651	3,500
Ghatal Central Co-operative Bank, Ltd. ..	3,600	..	..	..	1,16,454	..
DISTRICT BURDWAN.						
Kalna Central Co-operative Bank, Ltd. ..	2,381	..	..	..	2,64,148	..
Burdwan Central Co-operative Bank, Ltd. ..	9,415	31,363	..	..	7,53,953	..
Katwa Central Co-operative Bank, Ltd. ..	3,109	250	..	..	1,28,594	2,895
Asansol Central Co-operative Bank, Ltd. ..	2,815	..	..	..	53,417	4,273
DISTRICT DACCA.						
Dacca Central Co-operative Bank, Ltd. ..	30,533	50	..	..	8,07,963	12,693
Narayanganj Central Co-operative Bank, Ltd. ..	10,000	..	..	..	6,63,125	1,000
Manikganj Central Co-operative Bank, Ltd. ..	1,201	6,335	..	..	3,23,103	..
Bikrampur Central Co-operative Bank, Ltd. ..	12,773	..	..	..	2,61,946	..
Raipura Central Co-operative Bank, Ltd. ..	6,652	747	..	..	7,93,251	4,950
Tangi Central Co-operative Bank, Ltd. ..	869	22	..	..	1,80,666	..
Baira Central Co-operative Bank, Ltd. ..	3,575	..	..	..	1,42,805	.. —
Ichhapura Central Co-operative Bank, Ltd. ..	466	..	..	..	89,501	11,083
Kaliganj Central Co-operative Bank, Ltd. ..	1,895	..	..	..	1,65,502	..
Dacca Co-operative Industrial Union, Ltd. ..	..	..	..	8,268	..	1,29,153
Dacca Co-operative Milk Societies Union, Ltd. ..	25	..	..	..	22,690	..
DISTRICT MYMENSINGH.						
Mymensingh Central Co-operative Bank, Ltd. ..	255	7,598	..	538	22,30,526	1,33,656
Jamalpur Central Co-operative Bank, Ltd. ..	168	..	..	..	7,18,098	4,801
Tangail Central Co-operative Bank, Ltd. ..	..	..	..	..	9,07,561	..
Kishoreganj Central Co-operative Bank, Ltd. ..	5,186	8,210	..	..	4,34,835	5,336
Netrokona Central Co-operative Bank, Ltd. ..	5,235	335	..	..	2,80,668	37,644
Pingna Central Co-operative Bank, Ltd. ..	3,527	797	..	..	3,50,202	..
Madarganj Central Co-operative Bank, Ltd. ..	3,000	29,200	5,098	..	1,67,820	497
Dhanbari Central Co-operative Bank, Ltd. ..	2,109	..	..	..	2,19,898	2,433
Sarisabari Central Co-operative Bank, Ltd. ..	3,900	..	..	..	1,38,920	..
Gaffargaon Central Co-operative Bank, Ltd. ..	6,530	..	..	..	1,49,547	..
Bhairab Central Co-operative Bank, Ltd. ..	646	..	..	..	3,713	..
DISTRICT FARIDPUR.						
Faridpur Central Co-operative Bank, Ltd. ..	6,445	..	..	3,767	5,35,394	7,847
Madaripur Central Co-operative Bank, Ltd. ..	2,442	..	..	..	7,83,857	4,811
Gopalganj Central Co-operative Bank, Ltd. ..	4,283	..	..	..	3,13,140	2,201
Goalundo Central Co-operative Bank, Ltd. ..	2,679	4,050	..	5,000	3,30,544	..

I—*continued.*

quasi-assets.

Within the movement.								
Loans or deposits due to the Central Bank by the Provincial Bank or other Central Banks.	Loans and deposits due to Provincial Bank by Central Banks.	Uncalled share capital.	Guaranteed share capital.	Other investments inside the movement.	Net profit of past year.	Rates of interest on which money is usually—		Last dividend declared.
						Borrowed.	Lent.	
22	23	24	25	26	27	28	29	30
Rs.	Rs.	Rs.	Rs.	Rs.	Rs.	Per cent.	Per cent.	Per cent.
2,44,963	..	72,390	..	..	10,831	2 to 7½	8 to 10 15/16	5 & 4½
..	..	7,400	..	39,281	..	4 to 8½	10 15/16	..
5,999	..	12,400	..	750	274	4 to 7	9⅛ & 10 15/16	..
2,77,252	..	..	..	37,160	4,651	2½ to 5¾	7¾ to 10¼	..
2,00,801	..	57,685	..	36,920	908	3½	7½ to 10 15/16	6½
31,355	..	6,940	..	24,000	2,599	3 to 8	10½ to 12	..
28,699	..	50,600	..	16,958	1,588	3½ to 8	9⅜ to 10½	2 to 4
4,01,959	..	1,64,820	..	93,100	12,028	2⅛ to 5½	9⅜	6½
..	..	..	..	11,750	1,986	2½ to 8	9⅜	..
9,100	..	23,810	..	6,665	1,734	5 to 7½	9⅜	4 11/16
3,06,003	..	64,195	..	2,725	3,460	4 to 5 13/16	9⅜ to 12½	..
..	..	..	..	..	1,543	3½ to 8	10⅝/12	..
312	..	..	..	12,187	77	6½ to 8	9⅜	..
1,586	..	22,300	..	13,375	698	4 11/16 to 8	9⅜ & 10	5 Preference shareholders.
76,364	..	..	..	10,308	3,300	2 to 4	7 13/16 to 10 5/16	..
18,98,495	..	3,295	..	1,250	31,883	1 to 9½	4 to 9⅜	7
1,800	..	19,650	..	4,900	902	4 to 8	10½	..
7,344	..	3,025	..	3,655	..	2 to 7½	10	..
1,23,175	..	..	..	7,725	35,621	3 to 7½	2½ to 9⅜	6¼ to 7½
1	..	90,485	..	57,569	7,302	3¾ to 8	10½ to 11¼	5
511	..	57,108	..	9,946	6,473	2⅜ to 4½	10 15/16	4 11/16 to 6¼
..	..	..	..	14,120	11,068	3¾ to 8¼	10 15/16 to 12½	3½
8,560	..	84,550	..	76,356	8,082	3½ to 9	10 to 10 15/16	..
5	..	20,725	..	453	1,231	7 to 8	12½	..
10	..	18,867	..	12,895	2,525	3 to 8½	12	..
45	..	12,625	..	7,750	769	6½ to 8	12	..
882	..	17,770	..	8,000	1,610	7 to 9	12	..
..	..	4,883	..	1,88,413	..	8	12	..
21	..	4,620	..	..	475	6 to 8½	12½	..
1,21,000	..	22,400	..	1,20,920	1,09,108	1 to 6½	7½ to 9⅜	..
1,711	..	..	..	307	21,407	5 to 9	12½	..
..	..	1,10,935	..	51,503	20,961	3¾ to 8	9⅜ to 10 15/16	..
18,520	..	74,575	..	20,700	11,053	2½ to 8	10½ to 16 15/16	..
1,115	..	39,300	..	66,656	2,013	3 to 9	10 to 11½	..
..	..	..	..	21,993	6,888	3¾ to 8½	10 15/16	..
2,834	..	24,175	..	21,538	2,035	3¾ to 9	9⅜ to 12	..
..	..	..	..	16,761	3,543	4 to 6½	9⅜	..
274	..	15,190	..	13,350	2,118	6½ to 9	11¼	3½
..	..	20,325	..	14,800	3,419	4 to 8	10 15/16	..
..	..	6,305	..	..	..	3 to 6½	10 15/16	..
1,468	..	58,000	..	861	17,778	2½ to 8	12	..
..	..	90,535	..	1,01,989	18,294	3 to 7⅛	12	..
2,087	..	52,325	..	27,950	3,482	2 13/16 to 8	9⅜ to 12½	..
1,042	..	46,375	..	26,718	7,328	2 to 8	10½	.

PART

Name of Bank.	Liabilities and Outside the movement.					
	Deposits, fixed, current or Savings Bank, by non-members or by members in an individual capacity.	Debentures.	Overdrafts from outside Banks, *e.g.*, Presidency or Joint Stock.	Other items.	Fixed deposits or loans received from— Provincial Bank.	Fixed deposits or loans received from— Central Banks or Societies.
1	2	3	4	5	6(*a*)	6(*b*)
	Rs.	Rs.	Rs.	Rs.	Rs.	Rs.
II.—CENTRAL BANKS—*contd.*						
DISTRICT BAKARGANJ.						
Barisal Central Co-operative Bank, Ltd. ..	14,42,940	..	..	..	..	..
Bhola Central Co-operative Bank, Ltd. ..	68,166	..	..	..	1,06,400	1,84,953
Khepupara Central Co-operative Bank, Ltd. ..	18,713	..	..	..	1,31,200	2,46,907
Patuakhali Central Co-operative Bank, Ltd. ..	89,818	..	..	..	3,700	1,07,895
Mathbaria Central Co-operative Bank, Ltd. ..	27,059	..	..	..	60,050	1,28,484
Perojpur Central Co-operative Bank, Ltd. ..	82,929	..	..	..	7,850	3,863
DISTRICT CHITTAGONG.						
Chittagong Central Co-operative Bank, Ltd. ..	3,34,812	..	..	..	..	1,23,150
Cox's Bazar Central Co-operative Bank, Ltd. ..	69,071	..	..	..	85,000	21,750
Chittagong District Co-operative Industrial Union, Ltd.	434	..	..	..	1,15,000	..
Chittagong Central Co-operative Milk Supply Union, Ltd.	..	..	..	..	..	2,966
Chittagong Zilla Samabay Krishi Samity, Ltd. ..	1,192	..	..	2,002	70,000	..
DISTRICT NOAKHALI.						
Noakhali Central Co-operative Bank, Ltd.	2,89,636	..	..	5,246	1,11,100	35,443
Feni Central Co-operative Bank, Ltd. ..	4,35,835	..	..	..	..	4,920
Raipura Central Co-operative Bank, Ltd. ..	3,014	..	..	..	1,05,600	463
Lakshmipura Central Co-operative Bank, Ltd. ..	51,399	..	..	..	1,29,300	5,754
Hatiya Central Co-operative Bank, Ltd. ..	48,232	..	..	1,605	1,71,650	15,215
Sandvip Central Co-operative Bank, Ltd. ..	1,08,425	..	..	..	1,03,600	2,886
Chaumuhani Co-operative Industrial Union, Ltd. ..	1,964	..	..	..	64,500	..
Raipura Co-operative Industrial Union, Ltd. ..	1,456	..	..	..	19,130	40,168
DISTRICT TIPPERA.						
Comilla Central Co-operative Bank, Ltd. ..	5,95,935	..	6,125	10,633	3,34,250	64,041
Daudkandi-Gouripur Central Co-operative Bank, Ltd.	10,273	..	..	..	2,22,500	85,514
Tippera Raj Central Co-operative Bank, Ltd. ..	2,14,219	..	..	34,805	15,000	8,000
Laksam Central Co-operative Bank, Ltd. ..	8,984	..	..	..	6,400	1,66,693
Brahmanbaria Central Co-operative Bank, Ltd. ..	2,63,128	..	..	..	4,06,000	..
Nabinagar Central Co-operative Bank, Ltd. ..	23,506	..	..	..	3,78,166	..
Chandpur Central Co-operative Bank, Ltd. ..	4,75,467	..	..	..	2,37,000	7,747
Matlab Central Co-operative Bank, Ltd. ..	38,500	..	..	..	3,78,800	9,000
DISTRICT RAJSHAHI						
Rajshahi Central Co-operative Bank, Ltd. ..	2,61,610	..	..	20,766	30,000	172
Nator Central Co-operative Bank, Ltd. ..	1,37,920	..		..	34,000	..
Naogaon Central Co-operative Bank, Ltd. ..	2,91,765	..	..	..	4,000	29,612
Puthia Central Co-operative Bank, Ltd. ..	1,19,273	..	..	..	16,170	5,000
Naogaon Co-operative Industrial Union, Ltd. ..	335	..	..	15	13,000	..
Naogaon Co-operative Milk Union, Ltd. ..	61	..	..	2,645	..	1,679
DISTRICT PABNA.						
Pabna Central Co-operative Bank, Ltd. ..	5,17,964	..	..	2,911	1,10,000	1,459
Ullapara Central Co-operative Bank, Ltd. ..	1,61,298	..	..	..	90,000	911
Serajganj Central Co-operative Bank, Ltd. ..	3,26,649	..	..	..	1,33,000	25,386
Shahzadpur Central Co-operative Bank, Ltd. ..	1,32,866	..	..	..	1,84,500	..
Bhanguria Central Co-operative Bank, Ltd. ..	4,377	..	..	..	71,500	1,621
DISTRICT DINAJPUR.						
Dinajpur Central Co-operative Bank, Ltd. ..	90,138	..	..	..	28,000	11,925
Balurghat Central Co-operative Bank, Ltd. ..	2,09,751	..	..	14,669	..	2,597
Thakurgaon Central Co-operative Bank, Ltd. ..	82,032	..	..	..	92,500	..

I—*continued.*

quasi-liabilities.							Assets and quasi-assets.	
Within the movement.							Outside the movement.	
Drawn portion of cash credit with Provincial Bank.	Savings Bank or current accounts held in favour of Societies or Central Banks.	Reserve fund of Bank itself.	Paid-up share capital.	Other items.	Undrawn liabilities, *e.g.*, cash credit accounts guaranteed by the Provincial Banks to Central Banks or to Societies and by Central Banks to other Central Banks or Societies.		Cash in hand and in outside Banks.	Government paper
					To cover deposits.	For loans transaction.		
7	8	9	10	11	12	13	14	15
Rs.	Rs.	Rs.	Rs.	Rs.	Rs.	Rs.	Rs.	Rs.
..	..	84,000	1,35,325	71,283	..	..	46,923	56,660
..	..	12,673	53,313	43,606	..	..	914	..
..	674	78,038	1,04,092	82,415	..	..	583	12,125
..	2,709	20,300	36,900	19,448	..	..	176	..
..	1,724	22,000	41,725	27,230	..	..	742	..
..	1,763	2,467	18,700	4,932	..	..	249	..
..	48,863	30,375	86,850	7,767	..	..	18,412	20,000
..	1,999	5,350	23,225	3,411	..	..	369	..
..	11	1,727	13,594	..	..	..	9,254	..
..	..	540	2,947	660	..	..	167	..
..	235	2,303	7,082	..	..	..	104	..
..	..	24,239	57,050	18,394	..	..	5,289	..
..	12,066	31,915	58,930	30,744	..	..	5,054	..
..	..	3,396	11,300	4,900	..	..	125	..
..	..	14,317	33,370	11,389	..	..	1,982	..
..	400	10,000	35,100	13,120	..	..	155	..
..	2,345	9,817	38,310	12,054	..	..	4,382	..
..	..	3,626	8,355	..	..	..	50	..
..	..	..	5,390	..	..	..	..	..
..	..	76,197	1,18,965	15,947	..	..	3,087	12,300
..	28	8,750	38,740	13,957	..	..	6,045	..
..	1,233	2,150	43,160	..	..	..	3,488	12,000
..	..	2,863	36,255	11,152	..	..	2,751	..
..	..	32,408	75,525	30,172	..	..	18,217	5,946
..	..	6,701	45,725	17,332	..	..	399	..
..	5,638	59,000	1,11,950	57,381	..	..	19,632	..
..	2,180	9,450	54,375	12,629	..	..	7,813	..
35,000	2,315	23,200	54,767	44,876	..	..	15,382	..
..	..	6,673	26,565	2,614	..	..	171	..
..	17,929	16,775	57,690	35,986	..	..	6,303	..
10,000	..	5,134	21,157	5,732	5,000	784	913	..
14,000	..	1,230	5,847	87	..	..	211	..
..	..	60	1,065	211	..	..	7	..
..	12,062	90,000	1,05,200	89,741	..	1,500	2,084	43,60
..	..	15,122	40,520	31,561	..	..	2,680	..
28,982	13,696	39,013	79,570	58,657	..	..	7,668	..
9,904	..	10,643	40,630	26,820	..	2,200	2,120	..
..	6,897	633	10,420	1,970	..	..	100	..
..	119	3,815	12,820	..	..	..	400	..
..	1,727	13,596	33,568	7,503	..	..	18,157	..
9,248	..	6,500	21,075	..	752	..	3,474	..

PART

Name of Bank.	Assets and Outside the movement.					
	Post Office Savings Bank deposits.	Other investments of a liquid nature in outside concerns.	Undrawn balance of assured cash credit.		Loans to Agricultural Societies.	Loans to non-Agricultural Societies.
			With Presidency or Joint Stock Bank.	With Provincial Bank.		
	16	17	18	19	20	21
	Rs.	Rs.	Rs.	Rs.	Rs.	Rs.
II.—CENTRAL BANKS—*contd.*						
DISTRICT BAKARGANJ.						
Barisal Central Co-operative Bank, Ltd. ..	34,330	..	..	..	6,72,383	23,028
Bhola Central Co-operative Bank, Ltd. ..	1,172	..	..	..	3,54,102	22,961
Khepupara Central Co-operative Bank, Ltd. ..	252	..	..	..	4,93,677	2,042
Patuakhali Central Co-operative Bank, Ltd. ..	2,933	..	..	..	2,55,244	..
Mathbaria Central Co-operative Bank, Ltd. ..	2,500	..	..	..	2,53,514	4,145
Perojpur Central Co-operative Bank, Ltd. ..	5	..	..	..	99,896	2,712
DISTRICT CHITTAGONG.						
Chittagong Central Co-operative Bank, Ltd. ..	17,701	..	..	..	4,10,153	26,038
Cox's Bazar Central Co-operative Bank, Ltd. ..	2,196	..	..	15,000	1,44,965	13,720
Chittagong District Co-operative Industrial Union, Ltd.	..	..	..	..	..	46,098
Chittagong Central Co-operative Milk Supply Union, Ltd.	..	2,483	..	..	4,728	..
Chittagong Zilla Samabay Krishi Samity, Ltd. ..	400	..	..	..	43,867	..
DISTRICT NOAKHALI.						
Noakhali Central Co-operative Bank, Ltd. ..	5,709	..	..	..	3,55,444	33,090
Feni Central Co-operative Bank, Ltd. ..	30,041	..	..	..	3,96,401	1,778
Raipura Central Co-operative Bank, Ltd. ..	1,675	..	..	..	69,627	5,459
Lakshmipur Central Co-operative Bank, Ltd. ..	3,110	..	..	..	1,91,136	..
Hatiya Central Co-operative Bank, Ltd. ..	57	..	..	..	2,55,052	3,800
Sandvip Central Co-operative Bank, Ltd. ..	1,445	..	..	..	2,27,984	..
Chaumuhani Co-operative Industrial Union, Ltd.	15	..	..	..	..	42,161
Raipura Co-operative Industrial Union, Ltd. ..	6	..	..	..	..	..
DISTRICT TIPPERA.						
Comilla Central Co-operative Bank, Ltd. ..	8,581	71,097	..	7,000	7,50,849	..
Daudkandi-Gouripur Central Co-operative Bank, Ltd.	5,902	..	..	..	3,17,373	4,150
Tippera Raj Central Co-operative Bank, Ltd. ..	..	..	..	2,470	2,85,031	1,361
Laksam Central Co-operative Bank, Ltd. ..	8,276	..	..	..	2,05,462	2,933
Brahmanbaria Central Co-operative Bank, Ltd. ..	13,142	..	..	..	6,07,549	31,083
Nabinagar Central Co-operative Bank, Ltd. ..	6,021	..	..	..	3,65,261	273
Chandpur Central Co-operative Bank, Ltd. ..	6,025	..	..	..	6,79,916	11,304
Matlab Central Co-operative Bank, Ltd. ..	951	..	..	..	4,09,884	..
DISTRICT RAJSHAHI.						
Rajshahi Central Co-operative Bank, Ltd. ..	10,001	2,500	..	..	3,58,492	2,729
Nator Central Co-operative Bank, Ltd. ..	1,887	649	..	..	1,64,063	..
Naogaon Central Co-operative Bank, Ltd. ..	..	..	39,100	..	3,04,240	5,000
Puthia Central Co-operative Bank, Ltd. ..	9	..	..	..	1,47,977	..
Naogaon Co-operative Industrial Union, Ltd. ..	..	..	..	..	..	27,941
Naogaon Co-operative Milk Union, Ltd. ..	..	863	..	..	..	2,225
DISTRICT PABNA.						
Pabna Central Co-operative Bank, Ltd. ..	12,379	61	..	..	6,65,409	11,230
Ullapara Central Co-operative Bank, Ltd. ..	4,004	95	..	..	2,61,691	5,521
Serajganj Central Co-operative Bank, Ltd. ..	20,337	..	..	18	5,63,289	4,180
Shahzadpur Central Co-operative Bank, Ltd. ..	6,000	..	..	5	3,14,434	4,838
Bhanguria Central Co-operative Bank, Ltd. ..	2,734	..	..	..	81,435	2,088
DISTRICT DINAJPUR.						
Dinajpur Central Co-operative Bank, Ltd. ..	4	..	..	..	91,574	9,020
Balurghat Central Co-operative Bank, Ltd. ..	8,249	..	..	..	1,94,894	2,524
Thakurgaon Central Co-operative Bank, Ltd. ..	208	..	..	..	1,83,335	17,518

I—*continued.*

quasi-assets.

Within the movement.					Net profit of past year.	Rates of interest on which money is usually—		Last dividend declared.
Loans or deposits due to the Central Bank by the Provincial Bank or other Central Banks.	Loans and deposits due to Provincial Bank by Central Banks.	Uncalled share capital.	Guaranteed share capital.	Other investments inside the movement.		Borrowed.	Lent.	
22	23	24	25	26	27	28	29	30
Rs.	Rs.	Rs.	Rs.	Rs.	Rs.	Per cent.	Per cent.	Per cent.
8,62,040	..	1,48,775	..	16,293	37,221	2 to 6	2½ to 10⅛	12½
2,718	..	58,044	..	16,750	6,391	8	10 to 10⅛	6¼
6,461	..	89,525	..	44,650	7,338	7½ to 8	6¼ to 12½	..
1,469	..	40,670	..	7,200	9,682	6 to 8½	9 to 12½	..
31	..	41,725	..	13,825	4,137	8	10⅛	..
2,773	..	18,700	..	5,850	2,205	7 to 7½	10⅛ to 12½	..
91,873	..	86,850	..	9,350	12,041	4 to 7½	9, 9½ & 10½	9
4	..	23,225	..	15,900	..	4 to 9	9½ to 10½	..
6,230	..	..	..	13,350	890	7½	10½	..
..	..	953	..	270	301	6 to 7½	10½ to 12½	..
935	..	14,850	..	35,059	..	4 to 8	10½ to 15	..
5,748	..	57,090	..	13,100	8,794	2 to 8	9½ to 11⅛	7½
59,894	..	2,13,835	..	22,250	11,390	3 to 8	10⅛	6¼
40,012	..	11,300	..	12,634	475	7½ & 8	10⅛	..
..	..	34,630	..	28,664	2,594	6 to 9	10⅛ to 12½	3½
133	..	..	..	23,860	4,026	3½ to 8½	9½ to 10⅛	..
1,228	..	57,465	..	23,086	3,313	4 to 8½	9½ to 10⅛	6
..	..	..	..	4,368	.	8	10⅛	..
..	..	5,390	..	2,000	..	5½ to 8	..	..
2,96,265	..	1,18,965	..	9,175	16,932	2 to 8	10⅛	6¼
339	..	39,185	..	24,375	4,728	4½ to 8	9½ to 10⅛	..
17,386	..	41,975	..	..	8,646	2 to 7½	10⅛	9⅜
..	..	36,255	..	..	2,368	4½ to 8½	10⅛	6¼
24,597	..	75,525	..	29,560	6,399	2 to 8	10⅛	..
..	..	45,725	..	4,657	2,825	3½ to 8	9½ & 10⅛	..
..	..	1,11,950	..	67,506	12,140	3 to 5	9½	7½
1,280	..	54,375	..	39,275	3,747	4 to 8½	10⅛	..
18,610	..	77,733	..	3,877	11,145	3 to 8½	9½ to 10⅛	6¼
..	..	26,685	..	3,400	87	4 to 8	10½	..
4,563	..	57,690	..	32,148	4,317	3½ to 8½	9½ to 12	..
..	..	..	..	2,077	1,092	3⅜ to 9	10⅛ to 12½	..
..	..	5,847	..	..	232	8	12½	..
250	..	270	..	100	..	6 to 7½	10⅛	..
4,550	..	1,05,200	..	20,500	26,335	3 to 8	9⅜	..
..	..	40,520	..	20,757	3,449	7½ to 8	9½ to 10½	..
1,090	..	..	..	26,916	12,557	4 to 8	9½ to 10½	..
..	..	40,630	..	31,712	4,100	4 to 8½	10 to 10½	..
210	..	..	..	7,437	467	3½ to 9	10½	..
804	..	..	..	5,600	218	6 to 8	10½ & 12½	..
12,000	..	34,212	..	11,650	..	3 to 8	9½ & 10⅛	..
134	..	..	..	..	2,320	3½ to 8	9½ & 12½	..

PART

Name of Bank.	Liabilities and Outside the movement.					
	Deposits, fixed, current or Savings Bank, by non-members or by members in an individual capacity.	Debentures.	Overdrafts from outside Banks, *e.g.*, Presidency or Joint Stock.	Other items.	Fixed deposits or loans received from— Provincial Bank.	Fixed deposits or loans received from— Central Banks or Societies.
1	2	3	4	5	6(*a*)	6(*b*)
II.—CENTRAL BANKS—*concld.*	Rs.	Rs.	Rs.	Rs.	Rs.	Rs.
DISTRICT RANGPUR.						
Gaibandha Central Co-operative Bank, Ltd. ..	2,32,158	..	..	4,976	83,000	..
Kurigram Central Co-operative Bank, Ltd. ..	66,299	..	..	..	1,26,000	..
Nilphamari Central Co-operative Bank, Ltd. ..	93,657	..	..	2,551	88,000	..
Rangpur Central Co-operative Bank, Ltd. ..	3,26,848	..	..	1,108	36,000	..
DISTRICT BOGRA.						
Bogra Central Co-operative Bank, Ltd. ..	8,01,989	..	..	..	2,13,000	1,62,203
Khanjanpur Central Co-operative Bank, Ltd. ..	71,893	..	..	..	61,850	9,059
Padmapara Central Co-operative Bank, Ltd. ..	34,625	..	..	..	1,25,000	5,000
Nawadaboga Central Co-operative Bank, Ltd. ..	61,064	..	..	..	43,400	11,212
Chandanbaisa Central Co-operative Bank, Ltd. ..	864	..	..	274	14,350	1,53,871
DISTRICT JALPAIGURI.						
Jalpaiguri Central Co-operative Bank, Ltd. ..	60,293	..	..	584	62,300	11,955
DISTRICT MALDA.						
Malda Central Co-operative Bank, Ltd. ..	1,72,734	..	..	2,995	30,000	8,925
Chanchal Raj Central Co-operative Bank, Ltd. ..	1,19,521	..	..	1,245	22,150	..
Nawabganj Central Co-operative Bank, Ltd. ..	23,591	..	..	..	38,400	..
Harishchandrapur Central Co-operative Bank, Ltd.	1,03,174	..	..	5,703	20,700	..
Bengal Co-operative Silk Union, Ltd. ..	32,500	..	..	1,143	14,000	..
DISTRICT DARJEELING.						
Darjeeling Central Co-operative Bank, Ltd. ..	4,603	..	..	..	37,488	..
Kalimpong Central Co-operative Bank, Ltd. ..	1,81,207	..	..	4,596	61,150	..
Pedong Central Co-operative Bank, Ltd. ..	30,121	..	..	..	35,950	..
Darjeeling Co-operative Milk Societies Union, Ltd. ..	8,675	..	..	2,655	50,984	..
TOTAL OF CENTRAL BANKS	2,87,02,342	6,260	3,43,637	2,96,431	1,06,81,581	26,63,623
TOTAL OF PROVINCIAL AND CENTRAL BANKS	4,20,69,428	6,260	3,66,666	3,18,548	1,06,81,581	58,61,121
TOTAL OF PREVIOUS QUARTER ..	4,19,29,707	6,260	3,87,821	3,31,143	1,06,37,547	57,78,790

I—*concluded.*

quasi-liabilities.							Assets and quasi-assets.	
Within the movement.							Outside the movement.	
Drawn portion of cash credit with Provincial Bank.	Savings Bank or current accounts held in favour of Societies or Central Banks.	Reserve fund of Bank itself.	Paid-up share capital.	Other items.	Undrawn liabilities, *e.g.*, cash credit accounts guaranteed by the Provincial Banks to Central Banks or to Societies and by Central Banks to other Central Banks or Societies.		Cash in hand and in outside Banks.	Government paper.
					To cover deposits.	For loans transaction.		
7	8	9	10	11	12	13	14	15
Rs.	Rs.	Rs.	Rs.	Rs.	Rs.	Rs.	Rs.	Rs.
28,000	1,982	23,330	38,675	77,616	..	..	9,959	4,000
..	..	14,100	33,745	18,383	..	..	1,032	..
..	73	14,600	27,000	23,729	..	1,113	1,362	3,000
39,926	..	15,500	45,300	26,248	..	10,528	3,697	..
24,000	5	51,141	1,25,760	35,217	..	..	17,729	..
9,888	1,663	4,217	24,970	10,191	..	..	1,113	..
..	..	11,850	22,640	24,137	..	..	271	..
..	894	2,282	13,800	6,454	..	..	609	..
..	..	3,607	23,125	13,383	..	..	2,509	..
..	4,204	3,597	19,090	8,024	..	107	2,477	..
14,939	1,529	13,829	37,050	6,203	..	..	247	7,095
..	..	5,044	17,300	9,553	..	..	1,402	..
..	..	2,026	10,710	2,833	..	..	344	..
11,000	..	4,454	20,110	13,026	..	..	1,662	4,449
9,458	..	5,543	21,643	15,691	..	..	772	..
4,999	..	3,549	11,470	1,244	..	..	279	..
..	..	17,826	32,110	30,429	..	..	540	..
3,930	..	12,852	14,540	14,541	..	..	327	..
..	..	550	6,530	13,473	..	..	216	..
4,23,914	2,84,158	24,80,668	55,71,791	29,61,274	16,418	19,409	6,45,499	7,73,436
4,23,914	35,61,274	28,80,745	72,67,141	51,92,612	16,418	90,915	6,70,766	95,64,001
4,12,673	34,54,653	27,90,537	71,78,672	53,41,379	21,714	1,16,149	5,83,684	95,58,524

PART

Name of Bank.	Assets and					
	Outside the movement.					
	Post Office Savings Bank deposits.	Other investments of a liquid nature in outside concerns.	Undrawn balance of assured cash credit.		Loans to Agricultural Societies.	Loans to non-Agricultural Societies.
			With Presidency or Joint Stock Bank.	With Provincial Bank.		
	16	17	18	19	20	21
	Rs.	Rs.	Rs.	Rs.	Rs.	Rs.
II.—CENTRAL BANKS—*concld.*						
DISTRICT RANGPUR.						
Gaibandha Central Co-operative Bank, Ltd. ..	3,585	448	..	..	3,40,550	6,727
Kurigram Central Co-operative Bank, Ltd. ..	633	..	..	..	2,19,496	2,093
Nilphamari Central Co-operative Bank, Ltd. ..	1,211	..	..	..	1,78,347	887
Rangpur Central Co-operative Bank, Ltd. ..	73	..	..	74	3,60,526	1,138
DISTRICT BOGRA.						
Bogra Central Co-operative Bank, Ltd. ..	227	..	..	..	9,42,378	12,783
Khanjanpur Central Co-operative Bank, Ltd. ..	909	..	..	112	1,57,473	361
Padmapara Central Co-operative Bank, Ltd. ..	2,601	..	..	..	1,79,537	..
Nawadaboga Central Co-operative Bank, Ltd. ..	4,795	..	..	..	1,17,746	..
Chandanbaisa Central Co-operative Bank, Ltd. ..	6,756	..	..	..	2,16,942	..
DISTRICT JALPAIGURI.						
Jalpaiguri Central Co-operative Bank, Ltd. ..	9,193	..	..	..	1,09,788	16,852
DISTRICT MALDA.						
Malda Central Co-operative Bank, Ltd. ..	2,280	..	..	..	1,67,081	30,309
Chanchal Raj Central Co-operative Bank, Ltd. ..	3,700	..	..	..	1,44,822	..
Nawabganj Central Co-operative Bank, Ltd. ..	312	..	..	..	63,722	..
Harishchandrapur Central Co-operative Bank, Ltd.	1,361	..	..	..	1,48,782	3,070
Bengal Co-operative Silk Union, Ltd. ..	3,100	11,726	..	541	..	32,680
DISTRICT DARJEELING.						
Darjeeling Central Co-operative Bank, Ltd. ..	6	..	..	..	50,251	..
Kalimpong Central Co-operative Bank, Ltd. ..	100	..	..	..	..	2,60,735
Pedong Central Co-operative Bank, Ltd. ..	30	..	..	1,070	96,926	..
Darjeeling Co-operative Milk Societies Union, Ltd.	..	..	..	..	..	1,828
TOTAL OF CENTRAL BANKS	5,08,562	2,65,308	44,198	73,540	3,44,97,451	13,41,058
TOTAL OF PROVINCIAL AND CENTRAL BANKS	5,08,562	2,65,308	39,21,119	73,540	3,71,72,909	22,10,780
TOTAL OF PREVIOUS QUARTER ..	5,27,064	2,12,446	38,86,269	82,079	3,78,55,838	19,80,462

I—*concluded.*

quasi-assets.

Within the movement.								
Loans or deposits due to the Central Bank by the Provincial Bank or other Central Banks.	Loans and deposits due to Provincial Bank by Central Banks.	Uncalled share capital.	Guaranteed share capital.	Other investments inside the movement.	Net profit of past year.	Rates of interest on which money is usually— Borrowed.	Rates of interest on which money is usually— Lent.	Last dividend declared.
22	23	24	25	26	27	28	29	30
Rs.	Rs.	Rs.	Rs.	Rs.	Rs.	Per cent.	Per cent.	Per cent.
28,379	..	38,675	..	1,811	5,038	2½ to 8	9⅜ to 10 15/16	..
1,011	..	66,305	..	..	5,846	7½ & 8½	10½ & 12½	..
61	..	..	..	25,630	4,207	3 to 8	9⅜ & 12½	..
14,514	..	45,300	..	13,225	..	3 to 8½	..	..
1,67,834	..	1,25,760	..	23,950	19,382	3½ to 8½	9⅜ & 10½	..
1,000	..	..	..	3,613	1,389	7½ to 8	10 15/16	..
5	..	..	..	..	4,172	3½ to 8	10 15/16 to 12½	..
..	..	13,800	..	4,400	1,713	3 to 6½	9⅜	..
..	..	23,125	..	635	2,614	5½ to 8½	10½	5
2,650	..	19,090	..	11,937	..	2 to 8	10 to 12½	..
..	..	37,050	..	69,822	528	8½ to 12½	10 15/16 & 9⅜	..
..	..	..	..	5,025	2,003	4 to 8	9 to 10 15/16	2
88	..	10,730	..	6,733	412	4 11/16 to 8	10 15/16 & 12½	..
22	..	20,110	..	8,768	1,533	3½ to 8½	9⅜ to 10 15/16	..
197	..	23,957	..	15,017	3,023	6 to 8	12 & 10 15/16	..
255	..	..	..	10,074	..	..	..	..
..	..	..	..	13,932	4,015	2½ to 7	10	..
..	..	..	..	..	1,807	3½ to 8½	9 & 10	3½
..	..	1,048	..	11,113	..	7½	10 15/16	..
74,20,199	..	43,26,007	..	23,71,273	7,95,845	..	..	..
74,20,199	1,02,69,291	60,21,357	..	23,71,273	8,79,441	..	..	..
71,61,852	1,02,25,558	60,47,788	..	23,04,170	7,68,487	..	..	..

PART

Name of Bank.	Deposits of	
	On current or Savings Bank account.	Deposits for not more than three months.
1	2	3
	Rs.	Rs.
I.—PROVINCIAL BANK.		
The Bengal Provincial Co-operative Bank, Ltd.	20,28,571	22,000
II.—CENTRAL BANKS.		
Calcutta—		
Central Co-operative Anti-Malarial Society, Ltd.	....	....
Co-operative Milk Societies Union, Ltd.	9,180	....
District 24-Parganas—		
Taki Central Co-operative Bank, Ltd.	10,620	....
Nimta Central Co-operative Bank, Ltd.	....	15,245
Diamond Harbour Central Co-operative Bank, Ltd.	9,405	....
Barasat Central Co-operative Bank, Ltd.	....	....
Gosava Central Co-operative Bank, Ltd.	11,047	....
District Nadia—		
Nadia Central Co-operative Bank, Ltd.	53,345	....
Kushtia Central Co-operative Bank, Ltd.	86,509	....
Meherpur Central Co-operative Bank, Ltd.	21,883	....
Ranaghat Central Co-operative Bank, Ltd.	29,717	....
Chuadanga Central Co-operative Bank, Ltd.	....	....
District Jessore—		
Jessore Central Co-operative Bank, Ltd.	8,039	30
Magura Central Co-operative Bank, Ltd.	23,195	....
Narial Central Co-operative Bank, Ltd.	....	29,194
Jhenidah Central Co-operative Bank, Ltd.	102	....
District Khulna—		
Khulna Central Co-operative Bank, Ltd.	14,053	1,46,532
Bagerhat Central Co-operative Bank, Ltd.	71,854	....
Raruli Central Co-operative Bank, Ltd.	6,642	....
District Murshidabad—		
Jangipur Central Co-operative Bank, Ltd.	16,574	....
Berhampur Central Co-operative Bank, Ltd.	1,01,574	4,203
Lalbagh Central Co-operative Bank, Ltd.	917	1,080
Kandi Central Co-operative Bank, Ltd.	14,928	....
District Howrah—		
Howrah Central Co-operative Bank, Ltd.	....	....
Ulberia Central Co-operative Bank, Ltd.	4,726	....
District Hooghly—		
Hooghly Central Co-operative Bank, Ltd.	1,90,492	....
Arambagh Central Co-operative Bank, Ltd.	3,426	....
District Bankura—		
Bankura Central Co-operative Bank, Ltd.	2,09,509	....
Bankura District Co-operative Industrial Union, Ltd.	809	381
Bishnupur Central Co-operative Bank, Ltd.	....	82

II.

debentures of the kind dealt with in columns 2 and 3 of Part I.				Repayment of loans by Societies.		
Other deposits and debentures falling due—						
In twelve months from commencement of present quarter.	In next twelve months.	In twelve months following.	In subsequent years.	Estimated—		Actual in twelve months preceding present quarter.
				In twelve months from commencement of present quarter.	In next twelve months.	
4	5	6	7	8	9	10
Rs.	Rs.	Rs.	Rs.	Rs.	Rs.	Rs.
25,27,000	59,16,000	22,61,000	6,12,515	16,65,000	7,29,000	3,50,239
....	....	....	....	....	....	....
8,196	10,000	....	....	2,300	2,400	1,109
83,809	20,791	15,129	1,43,214	50,000	80,000	17,424
10,460	5,006	....	....	4,000	15,558	8,947
46,041	8,349	....	....	25,000	25,000	16,717
50,000	50,000	88,020	....	60,899	60,899	....
46,178	....	....	....	40,340	976	87,058
67,384	1,00,000	2,00,000	2,50,000	1,00,000	1,00,000	4,800
45,414	43,425	36,934	....	1,00,000	1,00,000	4,892
37,522	24,239	19,193	1,42,811	25,000	35,000	13,535
60,219	68,625	65,122	....	10,000	12,000	5,698
51,755	22,360	....	1,25,959	20,000	20,000	2,058
78,085	1,67,351	35,440	2,68,180	19,571	19,935	15,603
1,00,705	85,350	1,35,440	2,15,888	90,000	90,000	11,304
78,960	83,785	76,920	90,270	3,07,930	36,460	31,942
3,918	5,054	2,315	2,616	7,000	8,000	4,175
58,390	2,54,973	....	....	90,526	87,712	58,896
84,538	49,553	42,194	8,221	1,79,084	2,850	20,264
16,077	1,04,398	....	67,409	30,000	60,000	12,006
68,055	34,400	36,575	15,650	21,750	17,375	4,662
3,99,335	1,23,291	2,55,016	56,276	31,363	26,942	13,286
45,782	37,944	52,429	1,14,770	500	2,500	1,379
15,592	18,781	4,695	51,334	10,000	15,000	4,947
....	....	....	....	200	100	100
3,517	....	....	26,300	6,000	6,500	7,327
2,60,000	2,20,000	1,37,400	....	1,13,877	1,46,500	74,416
1,805	8,020	1,755	600	44,167	8,220	17,031
63,098	53,558	53,751	50,759	90,000	1,00,000	54,674
28,744	2,400	7,800	693	15,000	1,695	903
5,970	7,750	3,205	....	5,000	4,500	3,747

PART

Name of Bank.	Deposits or	
	On current or Savings Bank account.	Deposits for not more than three months.
1	2	3
II.—CENTRAL BANKS—*contd.*	Rs.	Rs.
District Birbhum—		
Rampurhat Central Co-operative Bank, Ltd.	1,19,072	....
Birbhum Central Co-operative Bank, Ltd.	1,99,510	....
Viswabharati Central Co-operative Bank, Ltd.	35,654	372
Nalhati Central Co-operative Bank, Ltd.	21,536	....
District Midnapore—		
Midnapore Central Co-operative Bank, Ltd.	1,52,643	6,138
Khelar Balarampur Central Co-operative Bank, Ltd.	16,078	11,648
Belebera Central Co-operative Bank, Ltd.	968	3,320
Tamluk Central Co-operative Bank, Ltd.	2,34,012	....
Mugberia Central Co-operative Bank, Ltd.	3,617	....
Balagoria Central Co-operative Bank, Ltd.	7,862	....
Ghatal Central Co-operative Bank, Ltd.	2,003	108
District Burdwan—		
Kalna Central Co-operative Bank, Ltd.	28,228	....
Burdwan Central Co-operative Bank, Ltd.	5,29,393	....
Katwa Central Co-operative Bank, Ltd.	10,178	....
Asansol Central Co-operative Bank, Ltd.	....	....
District Dacca—		
Dacca Central Co-operative Bank, Ltd.	58,086	....
Narayanganj Central Co-operative Bank, Ltd.	34,076	....
Manikganj Central Co-operative Bank, Ltd.	38,395	....
Bikrampur Central Co-operative Bank, Ltd.	1,112	....
Raipura Central Co-operative Bank, Ltd.	4,863	....
Tangi Central Co-operative Bank, Ltd.	304	....
Baira Central Co-operative Bank, Ltd.	548	....
Ichhapura Central Co-operative Bank, Ltd.	....	....
Kaliganj Central Co-operative Bank, Ltd.	27	....
Dacca Co-operative Industrial Union, Ltd.	1,921	....
Dacca Co-operative Milk Societies Union, Ltd.	2,589	....
District Mymensingh—		
Mymensingh Central Co-operative Bank, Ltd.	1,30,148	....
Jamalpur Central Co-operative Bank, Ltd.	19,178	....
Tangail Central Co-operative Bank, Ltd.	4,638	....
Kishoreganj Central Co-operative Bank, Ltd.	47,719	....
Netrokona Central Co-operative Bank, Ltd.	1,164	....
Pingna Central Co-operative Bank, Ltd.	3,179	....
Madarganj Central Co-operative Bank, Ltd.	3,163	....
Dhanbari Central Co-operative Bank, Ltd.	32	....
Sarisabari Central Co-operative Bank, Ltd.	185	....
Gaffargaon Central Co-operative Bank, Ltd.	25	....
Bhairab Central Co-operative Bank, Ltd.	....	....
District Faridpur—		
Faridpur Central Co-operative Bank, Ltd.	39,980	....
Madaripur Central Co-operative Bank, Ltd.	53,675	....
Gopalganj Central Co-operative Bank, Ltd.	21,171	....
Goalundo Central Co-operative Bank, Ltd.	74,828	....
District Bakarganj—		
Barisal Central Co-operative Bank, Ltd.	1,92,349	16,460
Bhola Central Co-operative Bank, Ltd.	3,890	1
Khepupara Central Co-operative Bank, Ltd.	5	....
Patuakhali Central Co-operative Bank, Ltd.	....	....
Mathbaria Central Co-operative Bank, Ltd.	1,446	....
Perojpur Central Co-operative Bank, Ltd.	2,337	15,295
District Chittagong—		
Chittagong Central Co-operative Bank, Ltd.	65,648	....
Cox's Bazar Central Co-operative Bank, Ltd.	7,759	....
Chittagong District Co-operative Industrial Union, Ltd.	434	....
Chittagong Central Co-operative Milk Supply Union, Ltd	....	....
Chittagong Zilla Samabay Krish, Samity, Ltd.	675	....

II—*continued.*

debentures of the kind dealt with in columns 2 and 3 of Part I.				Repayment of loans by Societies.		
Other deposits and debentures falling due—				Estimated—		Actual in twelve months preceding present quarter.
In twelve months from commencement of present quarter.	In next twelve months.	In twelve months following.	In subsequent years.	In twelve months from commencement of present quarter.	In next twelve months.	
4	5	6	7	8	9	10
Rs.	Rs.	Rs.	Rs.	Rs.	Rs.	Rs.
1,56,210	57,022	54,213	6,505	50,000	50,000	50,162
69,900	1,42,200	2,900	72,485	24,068	36,102	19,949
29,526	26,724	46,992	31,592	30,000	43,000	20,100
25,138	55,000	34,263	38,900	2,80,854	10,240	15,590
63,423	3,45,395	48,295	....	95,000	1,15,000	93,709
15,148	37,270	51,082	10,675	60,000	65,000	52,510
7,006	12,968	58,310	....	18,996	17,434	16,811
3,59,942	23,208	....	....	2,82,372	19,278	37,112
43,932	300	16,515	....	30,271	1,34,000	10,949
26,825	8,297	29,388	8,131	30,000	35,000	7,636
21,741	33,190	7,800	20	25,000	30,000	15,971
11,065	6,571	2,51,172	....	75,000	1,64,213	29,014
6,04,663	9,36,757	5,25,318	....	2,89,163	2,60,800	1,20,057
1,718	11,684	28,928	7,456	11,602	12,908	15,617
17,258	11,129	39,905	2,425	34,948	10,906	27,338
4,24,000	1,13,500	2,02,000	88,203	1,00,000	1,00,000	1,15,907
59,957	51,139	42,114	52,335	25,000	50,000	12,656
1,50,382	44,572	....	....	1,50,000	1,73,103	11,043
50,431	17,020	392	....	40,000	50,000	3,564
66,603	30,104	14,139	30,560	35,000	50,000	14,657
38,960	13,800	20,600	32,980	25,000	30,000	19,773
5,944	6,641	1,497	2,816	28,000	35,000	16,139
13,992	5,715	4,960	7,074	40,000	60,584	17,376
4,000	1,521	22,943	45,000	75,502	90,000	6,553
1,000	....	....	....	1,000	1,000	1,413
....	....	....	....	11,000	11,690	3,631
15,20,979	49,705	44,205	14,074	2,15,543	4,722	79,051
41,750	28,661	40,262	1,51,459	75,000	85,000	2,03,643
2,91,470	12,879	8,248	12,131	1,00,000	1,00,000	1,51,022
54,916	68,128	47,301	....	20,000	20,000	20,364
27,623	17,450	5,050	13,172	15,000	30,000	2,613
33,903	946	15,000	1,846	40,000	40,000	27,498
9,219	2,327	4,358	1,135	30,000	40,000	22,365
4,237	....	76	160	20,000	1,00,000	2,080
17,026	1,577	522	404	22,000	25,000	2,161
2,534	2,650	5,823	4,737	40,000	50,000	5,244
502	....	....	....	2,263	1,450	2,536
2,26,817	99,710	50,055	12,654	65,000	75,000	17,421
1,79,317	17,898	9,000	44,843	1,00,000	1,00,000	3,712
62,760	31,118	17,196	1,62,789	10,000	10,000	2,356
85,532	43,845	41,432	49,041	10,000	20,000	3,813
80,164	9,56,412	58,831	1,38,724	1,35,000	1,38,000	1,72,338
21,689	3,097	830	38,599	60,000	50,000	....
14,231	....	....	4,477	2,50,000	2,43,677	7,585
40,910	11,816	12,915	24,177	2,55,244	....	720
15,777	1,110	1,795	6,931	10,000	15,000	3,173
30,000	25,290	10,007	....	20,000	15,000	22,414
1,23,963	86,321	58,880	....	1,30,000	1,25,000	1,74,497
45,307	862	12,973	2,170	18,747	20,000	14,723
....	....	....	....	15,000	12,000	8,355
....	....	....	....	3,800	928	3,339
....	....	....	517	7,000	7,000	6,628

PART

Name of Bank.	Deposits or	
	On current or Savings Bank account.	Deposits for not more than three months.
1	2	3
II.—CENTRAL BANKS—*concld.*	Rs.	Rs.
District Noakhali—		
Noakhali Central Co-operative Bank, Ltd.	15,748	....
Feni Central Co-operative Bank, Ltd.	70,498	1,248
Raipura Central Co-operative Bank, Ltd.	....	40
Lakshmipur Central Co-operative Bank, Ltd.	310	....
Hatiya Central Co-operative Bank, Ltd.	1,966	....
Sandvip Central Co-operative Bank, Ltd.	12,772	....
Chaumuhani Co-operative Industrial Union, Ltd.	656	....
Raipura Co-operative Industrial Union, Ltd.	63	....
District Tippera—		
Comilla Central Co-operative Bank, Ltd.	27,429	....
Daudkandi-Gauripur Central Co-operative Bank, Ltd	1,187	....
Tippera Raj Central Co-operative Bank, Ltd.	9,931	....
Laksam Central Co-operative Bank, Ltd.	4,954	24
Brahmanbaria Central Co-operative Bank, Ltd.	13,308	153
Nabinagar Central Co-operative Bank, Ltd.	163	....
Chandpur Central Co-operative Bank, Ltd.	37,642	....
Matlab Central Co-operative Bank, Ltd.	4,695	....
District Rajshahi—		
Rajshahi Central Co-operative Bank, Ltd.	63,208	....
Nator Central Co-operative Bank, Ltd.	....	....
Naogaon Central Co-operative Bank, Ltd.	16,232	....
Puthia Central Co-operative Bank, Ltd.	8,602	....
Naogaon Central Co-operative Industrial Union, Ltd.	335	....
Naogaon Central Co-operative Milk Societies Union, Ltd.	....	....
District Pabna—		
Pabna Central Co-operative Bank, Ltd.	5,17,964	....
Ullapara Central Co-operative Bank, Ltd.	15,946	....
Serajganj Central Co-operative Bank, Ltd.	47,039	....
Shahzadpur Central Co-operative Bank, Ltd.	19,092	....
Bhanguria Central Co-operative Bank, Ltd.	9	....
District Dinajpur—		
Dinajpur Central Co-operative Bank, Ltd.	3,120	....
Balurghat Central Co-operative Bank, Ltd.	20,633	....
Thakurgaon Central Co-operative Bank, Ltd.	10,167	34
District Rangpur—		
Gaibandha Central Co-operative Bank, Ltd.	19,360	....
Kurigram Central Co-operative Bank, Ltd.	9,232	....
Nilphamari Central Co-operative Bank, Ltd.	38,709	....
Rangpur Central Co-operative Bank, Ltd.	24,543	....
District Bogra—		
Bogra Central Co-operative Bank, Ltd.	2,77,421	....
Khanjanpur Central Co-operative Bank, Ltd.	....	....
Padmapara Central Co-operative Bank, Ltd.	4,568	181
Nawadabaga Central Co-operative Bank, Ltd.	1,454	....
Chandanbaisa Central Co-operative Bank, Ltd.	....	....
District Jalpaiguri—		
Jalpaiguri Central Co-operative Bank, Ltd.	6,125	....
District Malda—		
Malda Central Co-operative Bank, Ltd.	31,008	....
Chanchal Raj Central Co-operative Bank, Ltd.	17,354	....
Nawabganj Central Co-operative Bank, Ltd.	....	....
Harishchandrapur Central Co-operative Bank, Ltd.	10,150	....
Bengal Co-operative Silk Union, Ltd.	....	....
District Darjeeling—		
Darjeeling Central Co-operative Bank, Ltd.	781	....
Kalimpong Central Co-operative Bank, Ltd.	38,769	....
Pedong Central Co-operative Bank, Ltd.	2,000	....
Darjeeling Co-operative Milk Societies Union, Ltd.	77	....
Total of Central Banks	44,80,069	2,51,779
Total of Provincial and Central Banks	65,08,640	2,73,779

II—*concluded.*

debentures of the kind dealt with in columns 2 and 3 of Part I.				Repayment of loans by Societies.		
Other deposits and debentures falling due—						
In twelve months from commencement of present quarter.	In next twelve months.	In twelve months following.	In subsequent years.	Estimated—		Actual in twelve months preceding present quarter.
				In twelve months from commencement of present quarter.	In next twelve months.	
4	5	6	7	8	9	10
Rs.	Rs.	Rs.	Rs.	Rs.	Rs.	Rs.
35,152	20,881	24,315	1,93,540	8,000	10,000	3,896
49,034	46,707	1,858	2,66,490	20,000	20,000	6,253
1,860	550	450	114	20,000	15,000	7,314
12,242	2,884	8,619	27,344	8,000	10,000	2,030
2,387	7,257	169	36,453	1,000	5,000	224
28,800	26,300	27,500	13,053	10,500	12,000	10,517
1,308	....	....	....	9,000	12,000	4,589
1,393	....	....	....	....	....	....
3,42,025	16,884	20,010	1,88,687	80,000	1,10,000	1,10,784
4,474	30	....	4,582	40,000	50,000	4,319
37,967	29,601	42,423	94,207	25,000	50,000	1,358
895	1,349	208	1,554	15,000	15,000	7,337
1,77,745	25,693	29,088	17,141	5,000	1,00,000	16,883
5,910	3,349	7,484	6,600	5,000	60,166	8,478
1,80,319	1,03,213	67,114	87,179	12,000	10,000	7,516
11,770	2,338	12,000	7,697	50,000	50,000	30,642
49,532	32,218	19,540	97,112	50,000	90,000	12,160
1,26,320	3,025	8,415	160	1,64,063	....	4,318
75,205	50,191	57,272	92,865	15,000	16,000	13,859
46,657	29,970	10,447	23,597	1,19,098	4,356	1,273
....	....	....	....	1,800	1,500	431
....	....	....	61	250	....	....
....	....	....	....	16,000	30,000	13,958
92,083	17,520	13,540	22,209	10,000	25,000	885
2,70,278	....	9,332	....	25,000	50,000	5,455
1,04,881	5,627	991	2,275	3,18,532	501	239
2,140	1,865	88	275	10,000	20,000	14,096
83,089	3,029	....	....	10,000	10,000	2,118
95,870	41,570	51,678	....	1,17,953	28,576	10,967
26,486	9,296	12,294	23,755	43,360	51,977	81,386
32,515	3,897	....	1,76,386	80,000	75,000	7,742
2,139	8,650	5,440	40,838	3,750	2,250	1,494
9,476	5,297	14,554	25,621	1,72,608	....	444
3,02,305	....	....	....	20,000	20,000	17,380
1,74,508	2,40,025	64,726	45,309	2,00,000	2,50,000	95,838
9,106	16,892	23,312	22,583	13,680	12,680	6,184
2,144	22,720	1,992	3,020	9,500	14,500	2,950
54,656	465	2,481	2,008	5,000	5,000	2,580
405	50	....	399	25,000	25,100	17,585
31,017	6,060	11,198	5,893	1,09,920	6,065	27,392
27,200	21,045	20,200	73,191	28,778	25,709	2,879
17,869	16,006	22,318	45,974	19,500	18,000	4,385
16,773	3,500	....	3,318	51,981	11,741	5,374
29,585	28,800	475	34,164	2,000	4,000	3,447
5,000	5,000	5,000	17,500	4,000	1,000	3,274
2,578	1,244	....	....	4,000	6,000	397
1,15,484	12,012	8,575	6,365	23,000	25,000	22,165
10,100	15,375	....	2,648	9,600	10,200	7,810
8,598	....	....	....	....	....	....
97,37,209	59,52,307	38,22,924	44,64,314	70,28,753	54,41,568	28,26,393
1,22,64,209	1,18,68,307	60,83,924	80,76,829	86,93,753	61,70,568	31,76,632

PART III.

Name of Bank.	Portion of deposits or debentures of the kind dealt with in columns 2 and 3 of Part I falling due in each quarter in twelve months from commencement of present quarter (4th column of Part II).				Repayments of loans by Societies estimated in each quarter in twelve months from commencement of present quarter (column 8 of Part II).			
	1st quarter.	2nd quarter.	3rd quarter.	4th quarter.	1st quarter.	2nd quarter.	3rd quarter.	4th quarter.
1	2	3	4	5	6	7	8	9
	Rs.	Rs.	Rs.	Rs.	Rs.	Rs.	Rs.	Rs.
I.—PROVINCIAL BANK.								
The Bengal Provincial Co-operative Bank, Ltd. ..	4,34,000	3,31,000	3,61,000	14,01,000	8,13,000	4,20,000	1,92,000	2,40,000
II.—CENTRAL BANKS.								
Calcutta—								
Central Co-operative Anti-Malarial Society, Ltd. ..	..	..	..	..	..	..	..	..
Co-operative Milk Societies Union, Ltd. ..	4,996	3,200	..	..	200	1,000	500	600
District 24-Parganas—								
Taki Central Co-operative Bank, Ltd.	41,098	20,887	11,415	10,409	25,000	20,000	3,000	2,000
Nimta Central Co-operative Bank, Ltd.	..	10,460	..	..	1,000	1,000	1,000	1,000
Diamond Harbour Central Co-operative Bank, Ltd. ..	28,085	11,026	5,050	1,880	3,000	10,000	8,000	4,000
Barasat Central Co-operative Bank, Ltd. ..	12,000	15,000	12,000	11,000	25,000	25,000	5,400	5,499
Gosava Central Co-operative Bank, Ltd.	1,996	..	..	44,182	11,374	12,334	16,632	..
District Nadia—								
Nadia Central Co-operative Bank, Ltd.	15,400	21 984	15,000	15,000	25,000	25,000	25,000	25,000
Kusthia Central Co-operative Bank, Ltd.	13,969	4,875	12,540	14,030	30,000	30,000	20,000	20,000
Meherpur Central Co-operative Bank, Ltd. ..	14,291	1,083	14,384	7,764	10,000	5,000	7,000	3,000
Ranaghat Central Co-operative Bank, Ltd. ..	18,609	16,500	13,000	12,110	1,500	2,600	3,000	2,900
Chuadanga Central Co-operative Bank, Ltd. ..	3,495	14,805	18,235	15,220	5,000	10,500	4,000	500
District Jessore—								
Jessore Central Co-operative Bank, Ltd.	6,080	17,320	49,600	5,085	6,628	8,601	1,650	2,692
Magura Central Co-operative Bank, Ltd. ..	45,705	20,000	15,000	20,000	30,000	25,000	25,000	10,000
Narail Central Co-operative Bank, Ltd.	24,820	19,576	20,435	14,129	66,840	70,932	68,542	1,01,616
Jhenidah Central Co-operative Bank, Ltd. ..	..	..	863	3,055	3,500	2,500	400	600
District Khulna—								
Khulna Central Co-operative Bank, Ltd. ..	16,192	34,138	5,562	2,498	16,925	20,615	39,562	13,424
Bagerhat Central Co-operative Bank, Ltd. ..	10,070	20,884	32,664	20,920	48,540	40,454	40,936	49,154
Raruli Central Co-operative Bank, Ltd.	10,500	400	1,177	4,000	3,000	10,000	15,000	2,000
District Murshidabad—								
Jangipur Central Co-operative Bank, Ltd. ..	20,575	17,025	16,215	14,240	7,535	6,475	4,425	3,315
Berhampur Central Co-operative Bank, Ltd. ..	1,51,548	92,820	95,056	59,911	15,639	3,393	11,531	800
Lalbag Central Co-operative Bank, Ltd.	18,350	10,732	3,800	12,900	43	200	50	207
Kandi Central Co-operative Bank, Ltd.	4,350	1,347	8,597	1,298	500	5,000	4,000	500
District Howrah—								
Howrah Central Co-operative Bank, Ltd.	..	..	..	..	50	50	50	50
Uluberia Central Co-operative Bank, Ltd. ..	1,550	867	..	1,100	1,800	2,200	1,500	500
District Hooghly—								
Hooghly Central Co-operative Bank, Ltd. ..	80,200	46,800	60,300	72,700	23,754	31,378	41,740	17,005
Arambagh Central Co-operative Bank, Ltd. ..	..	1,610	..	795	4,600	10,400	14,000	15,167
District Bankura—								
Bankura Central Co-operative Bank, Ltd. ..	9,953	26,130	22,480	4,535	5,000	25,000	40,000	20,000
Bankura District Co-operative Industrial Union, Ltd.	10,286	6,520	5,313	6,625	5,000	5,000	3,000	2,000
Bishnupur Central Co-operative Bank, Ltd. ..	700	335	3,765	1,170	500	3,000	1,000	500
District Birbhum—								
Rampurhat Central Co-operative Bank, Ltd. ..	28,644	44,345	64,048	19,173	1,000	40,000	5,000	4,000
Birbhum Central Co-operative Bank, Ltd. ..	13,800	10,500	14,400	31,200	730	11,080	11,500	758
Viswavarati Central Co-operative Bank, Ltd. ..	5,578	7,425	6,590	9,933	3,000	21,000	5,000	1,000
Nalhati Central Co-operative Bank, Ltd. ..	6,622	7,586	1,450	9,480	60,000	1,95,000	20,000	5,854
District Midnapore—								
Midnapore Central Co-operative Bank, Ltd. ..	41,125	18,187	4,111	..	3,000	45,000	45,000	2,000
Khelar-Balarampur Central Co-operative Bank, Ltd. ..	3,148	4,000	3,500	4,500	10,000	15,000	20,000	15,000
Belebera Central Co-operative Bank, Ltd. ..	..	1,234	4,572	1,200	1,518	7,547	8,508	1,423
Tamluk Central Co-operative Bank, Ltd. ..	70,737	95,209	1,18,503	75,493	2,58,952	8,584	13,141	6,695
Mugberia Central Co-operative Bank, Ltd. ..	12,000	9,562	11,420	10,950	600	10,271	15,000	4,400
Balagoria Central Co-operative Bank, Ltd. ..	..	2,500	3,000	21,325	1,000	15,000	10,000	4,000
Ghatal Central Co-operative Bank, Ltd.	3,000	5,755	1,164	11,822	2,000	10,000	12,000	1,000
District Burdwan—								
Kalna Central Co-operative Bank, Ltd.	5,000	..	..	6,065	5,000	4,000	24,000	42,000
Burdwan Central Co-operative Bank, Ltd. ..	1,17,231	1,09,508	1,79,790	1,98,134	20,000	1,51,888	91,375	25,900
Katwa Central Co-operative Bank, Ltd.	46	1,009	140	523	386	7,327	2,805	1,084
Asansol Central Co-operative Bank, Ltd.	8,282	538	6,838	1,600	32,840	1,058	525	525
District Dacca—								
Dacca Central Co-operative Bank, Ltd.	89,000	74,000	1,20,000	1,41,000	40,000	20,000	10,000	30,000
Narayanganj Central Co-operative Bank, Ltd. ..	22,112	26,049	8,908	7,888	10,000	7,000	5,000	3,000
Manikganj Central Co-operative Bank, Ltd. ..	60,300	40,082	30,000	20,000	70,000	40,000	25,000	15,000
Bikrampur Central Co-operative Bank, Ltd. ..	48,835	506	..	1,090	15,000	5,000	5,000	15,000
Raipura Central Co-operative Bank, Ltd.	19,941	8,207	13,391	24,974	20,000	3,500	1,500	10,000
Tangi Central Co-operative Bank, Ltd.	17,500	9,200	5,125	7,135	2,000	13,000	9,000	1,000
Baira Central Co-operative Bank, Ltd.	2,550	1,954	511	929	13,500	6,000	1,000	7,500
Ichhapura Central Co-operative Bank, Ltd. ..	2,115	6,806	4,225	846	10,000	15,000	10,000	5,000
Kaliganj Central Co-operative Bank, Ltd. ..	..	2,000	2,000	..	30,000	25,502	10,000	10,000
Dacca Co-operative Industrial Union, Ltd. ..	500	500	..	..	350	250	200	200
Dacca Co-operative Milk Societies Union, Ltd. ..	..	..	..	..	4,000	3,000	2,000	2,000
District Mymensingh—								
Mymensingh Central Co-operative Bank, Ltd. ..	14,01,267	50,245	48,168	21,299	88,513	1,21,488	5,542	..
Jamalpur Central Co-operative Bank, Ltd. ..	32,985	3,190	5,250	825	50,000	13,000	2,000	10,000
Tangail Central Co-operative Bank, Ltd. ..	2,73,054	5,215	9,460	3,741	60,000	15,000	5,000	19,000
Kishoreganj Central Co-operative Bank, Ltd. ..	20,243	9,012	12,479	13,182	15,000	500	200	4,309
Netrakona Central Co-operative Bank, Ltd. ..	15,317	2,611	5,683	4,012	8,000	4,000	2,000	1,000
Pingna Central Co-operative Bank, Ltd.	33,794	..	..	109	15,000	10,000	10,000	5,000
Madarganj Central Co-operative Bank, Ltd. ..	5,259	3,820	..	140	20,000	5,000	..	5,000
Dhanbari Central Co-operative Bank, Ltd. ..	4,237	..	..	..	15,000	3,000	1,000	1,000
Sariabari Central Co-operative Bank, Ltd. ..	4,542	6,156	1,300	5,028	9,000	1,000	..	12,000
Gaffargaon Central Co-operaitve Bank, Ltd. ..	..	100	2,434	..	10,000	20,000	10,000	..
Bhairab Central Co-operative Bank, Ltd.	502	..	..	..	2,263	..	..	..

PART III—*concluded.*

Name of Bank.	Portion of deposits or debentures of the kind dealt with in columns 2 and 3 of Part I falling due in each quarter in twelve months from commencement of present quarter (4th column of Part II).				Repayments of loans by Societies estimated in each quarter in twelve months from commencement of present quarter (column 8 of Part II).			
	1st quarter.	2nd quarter.	3rd quarter.	4th quarter.	1st quarter.	2nd quarter.	3rd quarter.	4th quarter.
1	2	3	4	5	6	7	8	9
II.—CENTRAL BANKS—*concld.*	Rs.	Rs.	Rs.	Rs.	Rs.	Rs.	Rs.	Rs.
District Faridpur—								
Faridpur Central Co-operative Bank, Ltd. ..	1,41,582	51,074	6,966	27,195	40,000	8,000	5,000	12,000
Madaripur Central Co-operative Bank, Ltd. ..	37,417	75,503	31,125	35,272	45,000	10,000	5,000	40,000
Gopalganj Central Co-operative Bank, Ltd. ..	15,497	11,362	10,942	24,959	3,000	4,000	1,000	2,000
Goalundo Central Co-operative Bank, Ltd. ..	20,582	22,789	21,548	20,713	4,000	3,000	1,500	1,500
District Bakarganj—								
Barisal Central Co-operative Bank, Ltd.	30,312	17,838	20,490	11,524	30,000	20,000	50,000	35,000
Bhola Central Co-operative Bank, Ltd.	2,100	12,588	3,620	3,381	12,550	32,000	8,000	7,450
Khepupara Central Co-operative Bank, Ltd. ..	..	2,231	12,000	..	25,000	1,25,000	50,000	50,000
Patuakhali Central Co-operative Bank, Ltd. ..	31,900	5,200	2,610	1,200	2,55,244	..	..	..
Mathbaria Central Co-operative Bank, Ltd. ..	723	246	8,808	6,000	1,000	3,000	5,500	500
Perojpur Central Co-operative Bank, Ltd. ..	8,000	12,000	6,000	4,000	4,000	8,000	5,000	3,000
District Chittagong—								
Chittagong Central Co-operative Bank, Ltd. ..	28,905	29,050	37,428	28,580	30,000	32,000	39,000	29,000
Cox's Bazar Central Co-operative Bank, Ltd. ..	10,630	4,000	14,528	16,143	3,000	7,747	5,000	3,000
Chittagong District Co-operative Industrial Union, Ltd.	..	..	..	..	3,000	5,000	3,500	3,500
Chittagong Central Co-operative Milk Supply Union, Ltd	..	..	..	..	800	1,200	1,000	800
Chittagong Zilla Samabay Krishi Samity, Ltd. ..	..	..	..	..	..	3,000	4,000	..
District Noakhali—								
Noakhali Central Co-operative Bank, Ltd. ..	10,285	16,135	3,576	5,156	3,000	2,500	1,500	1,000
Feni Central Co-operative Bank, Ltd.	5,986	22,198	13,221	7,629	5,000	10,000	2,000	3,000
Raipura Central Co-operative Bank, Ltd.	1,500	290	50	20	6,000	5,000	4,000	5,000
Lakshmipur Central Co-operative Bank, Ltd. ..	9,340	1,815	242	845	3,500	1,000	1,000	2,500
Hatiya Central Co-operative Bank, Ltd.	956	623	116	692	..	500	500	..
Sandwip Central Co-operative Bank, Ltd. ..	5,000	6,962	7,305	9,533	2,000	4,000	3,000	1,500
Chaumuhani Co-operative Industrial Union, Ltd. ..	200	1,108	..	..	1,000	3,500	2,500	2,000
Raipura Central Co-operative Industrial Union, Ltd. ..	1,393	..	..	..	..	..	..	..
District Tippera—								
Comilla Central Co-operative Bank, Ltd. ..	2,48,320	15,210	56,340	23,049	30,000	25,000	3,000	22,000
Laudkandi-Gouripur Central Co-operative Bank, Ltd.	2,891	1,525	58	..	15,000	15,000	10,000	..
Tippera Raj Central Co-operative Bank, Ltd. ..	11,386	12,806	7,244	6,531	600	10,000	14,000	400
Laksam Central Co-operative Bank, Ltd. ..	..	170	100	625	2,500	5,000	6,000	1,500
Brahmanbaria Central Co-operative Bank, Ltd. ..	1,39,546	16,548	7,788	13,863	2,000	1,250	1,250	500
Nabinagar Central Co-operative Bank, Ltd. ..	6,473	880	1,441	116	500	3,000	1,000	500
Chandpur Central Co-operative Bank, Ltd. ..	1,16,038	32,151	10,817	21,313	6,000	4,000	1,000	1,000
Matlab Central Co-operative Bank, Ltd.	4,200	300	543	6,727	13,000	10,000	2,000	25,000
District Rajshahi—								
Rajshahi Central Co-operative Bank, Ltd. ..	4,052	8,521	20,739	16,220	10,000	15,000	10,000	15,000
Nator Central Co-operative Bank, Ltd.	1,74,345	1,050	5,000	2,925	1,64,063	..	..	..
Naogaon Central Co-operative Bank, Ltd. ..	27,205	20,000	15,000	13,000	6,000	5,000	3,000	1,000
Puthia Central Co-operative Bank, Ltd.	37,939	2,691	4,868	1,159	1,17,484	..	1,614	..
Naogaon Industrial Union, Ltd.	..	..	..	..	400	600	500	300
Naogaon Central Co-operative Milk Societies, Ltd. ..	..	..	..	..	..	..	..	250
District Pabna—								
Pabna Central Cooperative Bank, Ltd.	..	..	..	..	5,000	4,000	3,500	3,500
Ullapara Central Co-operative Bank, Ltd. ..	19,701	30,065	5,575	36,742	1,000	500	500	8,000
Serajganj Central Co-operative Bank, Ltd. ..	90,685	62,300	41,350	75,943	2,000	10,000	..	13,000
Shahzadpur Central Co-operative Bank, Ltd. ..	75,000	25,000	4,000	881	3,00,000	17,000	354	1,178
Bhanguria Central Co-operative Bank, Ltd. ..	585	1,300	5	300	25,000	3,000	1,500	3,000
District Dinajpur—								
Dinajpur Central Co-operative Bank, Ltd. ..	71,205	9,155	2,729	..	2,000	5,000	2,500	500
Balurghat Central Co-operative Bank, Ltd. ..	18,332	33,646	14,302	29,590	85,684	..	29,519	2,750
Thakurgaon Central Co-operative Bank, Ltd. ..	7,251	11,973	2,116	5,146	25,540	9,080	6,805	1,035
District Rangpur—								
Gaibandha Central Co-operative Bank, Ltd. ..	2,570	13,015	7,024	9,897	30,000	20,000	10,000	20,000
Kurigram Central Co-operative Bank, Ltd. ..	535	1,025	139	440	2,000	875	525	350
Nilphamari Central Co-operative Bank, Ltd. ..	50	5,125	960	3,341	1,72,608	..	..	..
Rangpur Central Co-operative Bank, Ltd. ..	3,02,305	..	..	..	10,000	3,000	5,000	2,000
District Bogra—								
Bogra Central Co-operative Bank, Ltd.	43,046	54,586	37,465	39,411	30,000	70,000	60,000	40,000
Khanjanpur Central Co-operative Bank, Ltd. ..	621	2,587	3,996	1,902	5,908	4,325	2,005	1,442
Padmapara Central Co-operative Bank, Ltd. ..	1,426	187	111	420	4,000	1,500	500	3,500
Nawababoga Central Co-operative Bank, Ltd. ..	50,487	3,876	19	274	2,500	2,000	..	500
Chandanbaisa Central Co-operative Bank, Ltd. ..	405	..	..	..	7,900	800	300	16,000
District Jalpaiguri—								
Jalpaiguri Central Co-operative Bank, Ltd. ..	4,585	4,017	18,465	3,950	1,04,682	100	4,838	300
District Malda—								
Malda Central Co-operative Bank, Ltd.	4,870	11,745	2,995	7,680	6,690	8,151	9,179	4,758
Chanchal Raj Central Co-operative Bank, Ltd. ..	6,428	5,575	977	4,889	8,000	7,000	3,000	1,500
Nawabganj Central Co-operative Bank, Ltd. ..	2,643	11,415	2,126	589	2,500	40,000	6,500	2,981
Harischandrapur Central Co-operative Bank, Ltd. ..	11,610	250	625	17,100	500	1,000	500	..
Bengal Co-operative Silk Union, Ltd.	..	..	5,000	..	1,000	1,000	1,000	1,000
District Darjeeling—								
Darjeeling Central Co-operative Bank, Ltd. ..	..	..	2,578	..	1,000	1,000	1,000	1,000
Kalimpong Central Co-operative Bank, Ltd. ..	58,531	13,492	30,074	13,387	5,000	8,000	6,000	4,000
Pedong Central Co-operative Bank, Ltd.	..	6,500	3,600	..	760	3,000	3,100	2,740
Darjeeling Co-operative Milk Societies Union, Ltd. ..	8,598	..	..	..	..	..	..	..
Total of Central Banks	47,90,171	17,15,073	16,42,661	15,89,304	29,42,993	18,90,155	12,14,703	9,80,902
Total of Provincial and Central Banks ..	52,24,171	20,40,073	20,03,661	29,90,304	37,55,993	23,10,155	14,06,703	12,20,902

Vital Statistics for the month of May 1934 of the

Districts.	No.	Towns.	Population under registration according to census of 1931.			Births registered.		Deaths							
			Male.	Female.	Total.	Number registered (excluding stillbirths).	Stillborn number registered.	Cholera.	Small-pox.	Plague.	Malaria.	Enteric fever.	Measles.	Relapsing fever.	Kala-azar.
Burdwan ..	1	Burdwan	23,485	16,133	39,618	34	..	..	2	..	4	2	..	..	1
	2	Raniganj	9,162	7,211	16,373	31	1	1	..	..	1	..	..	..	..
	3	Asansol ..	18,710	12,576	31,286	45	..	..	..	..	..	..	..	..	..
Birbhum ..	4	Suri ..	6,089	4,819	10,908	4	..	..	..	..	..	..	..	..	..
Bankura ..	5	Bankura	17,280	14,423	31,703	25	..	..	..	..	..	..	..	..	..
	6	Vishnupur	9,767	9,929	19,696	13	..	..	..	..	1	..	..	..	..
	7	Sonamukhi	5,337	5,652	10,989	14	..	..	..	..	1	..	..	..	..
Midnapur ..	8	Midnapur	17,807	14,214	32,021	40	..	1	..	..	1	..	2	..	..
	9	Ghatal ..	6,422	5,978	12,400	19	..	..	..	..	..	..	..	..	..
Hooghly ..	10	Hooghly-Chinsura.	18,799	13,835	32,634	66	6	..	3	..	1	5	..	..	..
	11	Bansberia	9,797	4,424	14,221	6	1	..	..	..	5	..	..	..	..
	12	Serampur	23,985	15,071	39,056	60	..	5	3	..	2	6	..	..	..
	13	Rishra-Konnagar.	17,528	9,340	26,868	21	..	4	..	..	..	1	..	..	..
	14	Baidyabati	10,369	8,117	18,486	18	..	..	..	..	..	..	..	..	1
	15	Bhadreswar	14,938	8,054	22,992	25	..	..	1	..	..	..	..	..	..
	16	Champdani	17,497	7,868	25,365	39	..	..	..	..	..	1	..	..	..
Howrah ..	17	Howrah ..	145,120	79,753	224,873	415	23	70	17	..	7	22		..	..
	18	Bally ..	20,044	9,403	30,347	33	..	5	1	..	4	..	..	..	..
24-Parganas ..	19	South Suburban.	22,183	17,316	39,499	65	..	11	2	..	5	1	..	..	..
	20	Tollyganj	14,800	9,676	24,476	35	..	2	..	..	2	..	..	..	..
	21	Budge-Budge.	15,514	8,669	24,183	5	..	10	2	..	1	2	..	..	..
	22	Baranagar	23,116	13,934	37,050	43	1	8	0	..	2	3	1	..	1
	23	Kamarhati	20,107	10,247	30,354	32	..	6	1	..	..	..	..	..	..
	24	Rajpur ..	5,788	5,645	11,433	22	..	3	..	..	1	..	..	..	..
	25	South Dum-Dum.	11,983	6,488	18,471	23	1	..	..	..	1	1	..	..	
	26	Barrackpur	16,320	9,075	25,395	15	..	1	..	..	..	..	..	..	..
	27	Panihati	6,738	4,961	11,699	20	1	..	..	..	1	..	..	..	..
	28	North Barrackpur.	9,751	6,507	16,258	22	..	11	..	..	4	..	..	..	..
	29	Titagarh	34,252	15,332	49,584	53	3	..	..	..	..	..	1	..	..
	30	Garulia ..	9,282	4,751	14,033	9	..	1	1	..	..	..	..	..	..
	31	Naihati ..	20,123	10,785	30,908	23	..	..	1	..	1	..	..	..	..
	32	Halisahar	12,188	4,582	16,770	7	..	2	..	..	..	..	..	..	..
	33	Kanchrapara.	10,113	4,892	15,005	19	..	..	..	..	..	..	..	..	..
	34	Bhatpara	60,134	24,841	84,975	77	..	2	5	..	3	..	1	..	..
	35	Basirhat ..	11,106	10,181	21,287	27	..	3	3	..	2	..	1	..	..
	36	Baduria ..	7,169	6,508	13,677	15	..	..	..	..	..	..	..	..	..
Calcutta ..	37	Calcutta ..	814,948	381,786	1,196,734	1,882	182	340	113	..	65	98	23	..	18
Nadia ..	38	Krishnagar	12,807	11,477	24,284	12	..	..	..	..	..	..	..	..	..
	39	Nabadwip	8,912	9,949	18,861	18	4	2	..	..	2	1	..	..	1
	40	Ranaghat	6,334	5,061	11,395	14	..	..	..	..	2	..	..	..	..
	41	Santipur	12,016	12,976	24,992	50	2	..	..	..	..	..	..	..	1

towns with a population of 10,000 and over in Bengal.

registered.

Other fevers.	Dysentery.	Diarrhœa.	Influenza.	Pneumonia.	Phthisis.	Other respiratory diseases.	Injuries including suicide.	Deaths from child-birth.	Other causes.	Total of all causes.			Total of corresponding month of previous year.			No.	Towns.
										Male.	Female.	Total.	Male.	Female.	Total.		
..	3	1	..	3	2	2	2	1	12	18	17	35	21	18	39	1	Burdwan.
4	1	..	..	4	..	1	..	..	10	14	8	22	8	6	14	2	Raniganj.
9	..	..	..	2	1	1	2	1	5	8	13	21	10	3	13	3	Asansol.
1	2	..	..	2	1	2	..	..	1	5	4	9	4	3	7	4	Suri.
5	1	2	..	6	..	3	1	..	12	17	13	30	10	11	21	5	Bankura.
3	..	3	..	2	..	..	..	..	6	7	8	15	11	14	25	6	Vishnupur.
4		2	..	2	..	1	..	1	8	10	9	19	11	6	17	7	Sonamukhi.
7	2	3	..	3	3	..	1	..	16	18	21	39	15	6	21	8	Midnapur.
9	..	1	..	..	..	1	..	..	3	9	5	14	10	6	16	9	Ghatal.
8	..	1	..	8	3	6	3	..	23	40	21	61	43	34	77	10	Hooghly-Chinsura.
1	..	1	..	1	1	2	..	..	1	4	8	12	8	5	13	11	Bansberia.
3	3	3	..	3	1	2	..	..	11	20	16	42	22	10	32	12	Serampur.
1	..	1	1	1	1	1	1	..	2	6	8	14	18	7	25	13	Rishra-Konnagar.
1	1	1	..	2	..	..	..	1	9	8	8	16	13	13	26	14	Baidyabati.
8	..	3	..	2	..	..	..	1	7	11	11	22	19	9	28	15	Bhadreswar.
4	2	1	..	8	2	..	..	..	17	26	9	35	16	9	25	16	Champdani.
1	46	30	..	34	43	98	12	3	155	330	222	552	292	212	504	17	Howrah.
..	..	1	1	..	2	1	..	..	4	10	9	19	13	20	33	18	Bally.
..	5	..	..	5	1	1	3	..	11	29	16	45	26	28	54	19	South Suburban.
3	1	2	..	5	..	..	..	1	2	11	7	18	11	10	21	20	Tollyganj.
5	8	4	..	..	..	2	2	..	4	22	18	40	17	13	30	21	Budge-Budge.
8	12	5	..	1	1	4	2	..	22	36	43	79	31	25	56	22	Baranagar.
8	3	1	..	4	..	2	..	..	3	17	11	28	26	21	47	23	Kamarhat.
2	..	..	..	..	..	..	1	..	..	1	6	7	8	7	15	24	Rajpur.
3	..	1	..	3	..	3	..	..	5	7	10	17	4	3	7	25	South Dum-Dum.
..	..	..	..	..	..	1	..	..	2	3	1	4	4	6	10	26	Barrackpur.
..	..	2	..	..	..	..	..	..	0	8	4	12	9	7	16	27	Panihati.
3	1	..	..	1	..	..	..	..	3	10	13	23	6	10	16	28	North Barrackpur.
45	..	..	..	..	..	..	1	1	3	28	23	51	32	22	54	29	Titagarh.
2	..	..	..	..	..	..	1	..	1	5	1	6	5	2	7	30	Garulia.
1	..	..	..	2	1	..	1	..	8	10	5	15	8	7	15	31	Naihati.
..	..	1	..	..	..	..	..	..	5	5	3	8	3	3	6	32	Halisahar.
11	..	2	..	2	1	..	..	..	4	12	8	20	8	6	14	33	Kanchrapara.
50	2	3	..	8	3	2	0	2	14	68	33	101	30	32	62	34	Bhatpara.
2	..	..	..	1	..	..	..	..	5	10	7	17	12	11	23	35	Basirhat.
5	..	..	..	..	1	1	..	1	2	5	5	10	14	6	20	36	Baduria.
222	114	119	17	172	259	360	73	6	951	1,656	1,204	2,950	1,620	1,264	2,893	37	Calcutta.
6	..	..	..	3	..	1	..	..	5	8	7	15	7	8	15	38	Krishnagar.
17	1	1	..	1	..	1	..	..	7	12	22	34	13	30	43	39	Nabadwip.
..	1	..	..	1	..	..	1	..	..	2	3	5	8	2	10	40	Ranaghat.
13	..	1	..	1	2	1	2	..	9	19	11	30	15	14	29	41	Santipur.

Vital Statistics for the month of May 1934 of the

Districts.	No.	Towns.	Population under registration according to census of 1931.			Births registered.		Deaths							
			Male.	Female.	Total.	Number registered (excluding still births).	Still-born number registered.	Cholera.	Small-pox.	Plague.	Malaria.	Enteric fever.	Measles.	Relapsing fever.	Kala-azar.
Murshidabad	42	Berhampur	15,166	12,237	27,403	26	..	1	2	..	7	2	..	..	1
	43	Jiaganj-Azimganj.	5,774	5,224	10,998	12	..	..	..	..	1	..	3	..	..
	44	Kandi ..	6,403	6,213	12,616	13	1	..	..	..	..	..	..	..	..
	45	Jangipur	6,283	6,513	12,796	9	..	..	..	..	..	..	..	..	..
Jessore ..	46	Jessore ..	7,084	4,272	11,356	6	..	..	..	..	1	..	..	..	3
Khulna ..	47	Khulna ..	11,968	7,152	19,120	4	..	..	1	..	1	..	..	..	1
	48	Satkhira ..	6,071	5,170	11,241	9	..	1	..	..	..	..	..	..	..
Rajshahi ..	49	Rajshahi	15,178	11,886	27,064	40	..	5	..	..	..	..	..	..	1
Dinajpur ..	50	Dinajpur	11,763	7,393	19,156	8	..	..	..	..	..	..	..	..	2
Jalpaiguri ..	51	Jalpaiguri	11,995	6,967	18,962	19	1	..	..	..	1	..	..	..	3
Darjeeling..	52	Darjeeling	12,101	9,084	21,185	77	5	..	..	..	1	..	..	..	2
Rangpur ..	53	Rangpur	12,808	7,941	20,749	10	1	..	..	..	2	..	..	..	2
Bogra ..	54	Bogra ..	8,678	6,141	14,819	9	..	..	1	..	..	..	..	..	..
Pabna ..	55	Pabna ..	11,970	9,934	21,904	10	..	..	1	..	4	..	..	..	..
	56	Sirajganj	17,981	14,486	32,467	7	..	..	3	..	3	..	..	..	..
Malda ..	57	English Bazar.	9,387	7,520	16,907	32	..	..	..	..	4	1	..	..	3
	58	Nawabganj	7,497	8,320	15,826	29	..	..	..	..	..	..	..	..	..
Dacca ..	59	Dacca ..	79,365	59,153	138,518	328	7	1	2	..	1	4	1	..	6
	60	Narayanganj	21,526	12,663	34,189	68	..	1	..	..	..	..	1	..	..
Mymensingh	61	Mymensingh	19,733	10,747	30,480	32	..	..	..	..	1	..	..	..	..
	62	Netrakona	6,848	4,132	10,980	14	..	..	1	..	..	..	..	..	..
	63	Jamalpur	12,629	10,448	23,077	15	..	..	1	..	4	..	..	..	..
	64	Sherpur ..	10,545	9,002	19,547	27	..	..	..	..	..	..	..	..	..
	65	Kishorganj	8,624	6,813	15,437	33	..	1	..	..	1	..	..	..	..
	66	Bajitpur ..	5,632	6,018	11,650	14	..	..	..	..	2	..	..	..	..
	67	Tangail ..	8,739	7,343	16,082	16	1	..	..	..	..	..	1	..	..
Faridpur ..	68	Faridpur	9,427	6,089	15,516	13	..	..	..	..	5	..	..	..	..
	69	Madaripur	15,204	11,690	26,894	30	..	5	..	..	..	..	..	..	..
Bakarganj ..	70	Barisal ..	23,588	12,128	35,716	37	..	10	..	..	..	..	..	..	2
	71	Pirojpur ..	6,062	4,897	10,959	21	1	..	..	..	..	..	..	..	..
Chittagong	72	Chittagong	35,049	18,107	53,156	97	4	3	..	..	..	3	..	..	..
Noakhali ..	73	Noakhali	7,808	5,255	13,063	20	1	1	..	..	..	..	..	..	..
Tippera ..	74	Comilla ..	18,530	12,835	31,365	22	1	..	..	..	..	..	..	..	..
	75	Brahmanbaria.	13,973	12,689	26,662	47	2	..	1	..	..	..	1	..	..
	76	Chandpur	11,443	5,395	16,838	5	..	..	3	..	..	..	..	..	..
		Total of month.	2,051,552	1,194,305	3,245,857	4,561	250	517	180	..	158	153	41	..	49
		Total of corresponding month of previous year ..	..	..	..	4,666	299	563	502	..	125	121	49	1	66
		Increase + or decrease—	..	..	..	—105	—49	—46	—322	..	+33	+32	—8	—1	—17

Remarks.—1. The above table is compiled from returns collected by the municipalities and submitted to the Director of Public Health by the approximate to the actual in a proportion of cases and in a few instances are obviously incomplete.

2. The vital statistics of municipalities with a population of less than 10,000 have been excluded from this statement and 1918.

3. The birth and death ratios per mille per annum have been omitted from this statement according to Government of India

Calcutta, the 4th January 1935.

towns with a population of 10,000 and over in Bengal.

registered.

Other fevers.	Dysentery.	Diarrhœa.	Influenza.	Pneumonia.	Phthisis.	Other respiratory diseases.	Injuries including suicide.	Deaths from child-birth.	Other causes.	Total of all causes.			Total of corresponding month of previous year.			No.	Towns.
										Male.	Female.	Total.	Male.	Female.	Total.		
8	3	..	..	2	..	4	..	..	7	15	22	37	25	14	39	42	Berhampur.
..	..	..	..	1	3	2	1	..	6	11	6	17	9	8	17	43	Jiaganj-Azimganj.
1	..	..	..	..	..	..	..	..	3	2	2	4	9	5	14	44	Kandi.
1	..	..	..	1	..	..	1	..	..	2	1	3	5	..	5	45	Jangipur.
3	1	..	..	..	..	..	..	..	7	8	7	15	6	3	9	46	Jessore.
5	2	2	..	2	..	1	2	..	1	14	4	18	12	5	17	47	Khulna.
3	..	..	..	..	..	..	..	..	1	2	3	5	6	4	10	48	Satkhira
10	5	..	..	3	..	2	3	..	9	20	18	38	29	20	49	49	Rajshahi.
2	..	..	..	1	1	..	1	..	4	8	2	10	22	13	35	50	Dinajpur.
..	..	..	..	3	1	2	..	..	2	10	2	12	10	5	15	51	Jalpaiguri
18	3	1	..	8	5	1	1	1	22	27	36	63	22	28	50	52	Darjeeling.
1	1	..	..	2	..	..	1	..	6	12	3	15	17	9	26	53	Rangpur.
8	..	..	..	..	..	..	2	..	2	8	5	13	24	18	42	54	Bogra.
..	1	..	..	3	..	..	..	..	4	9	4	13	10	7	17	55	Pabna.
1	1	..	..	..	..	..	..	..	1	8	1	9	3	3	6	56	Sirajganj.
3	..	1	..	6	1	2	1	..	7	17	12	29	4	7	11	57	English Bazar.
12	4	2	..	3	1	..	..	..	7	17	12	29	14	2	16	58	Nawabganj.
11	19	6	2	48	7	35	12	2	94	144	107	251	155	139	294	59	Dacca.
14	3	..	..	1	2	2	..	1	35	31	29	60	20	22	42	60	Narayanganj.
15	3	2	..	2	..	..	2	..	10	19	16	35	20	7	27	61	Mymensingh.
9	..	2	..	..	..	..	..	1	5	12	6	18	11	9	20	62	Netrakona.
3	3	1	..	..	..	1	1	..	5	12	7	19	20	23	43	63	Jamalpur.
8	7	..	..	..	1	1	..	..	8	10	15	25	12	11	23	64	Sherpur.
2	..	..	..	..	..	1	..	..	3	6	2	8	8	11	19	65	Kishorganj.
2	..	..	..	..	..	..	..	..	6	9	1	10	3	3	6	66	Bajitpur.
5	1	1	..	3	1	..	..	..	3	4	11	15	5	8	13	67	Tangail.
..	1	1	..	..	..	..	..	..	..	3	4	7	6	3	9	68	Faridpur.
12	1	..	..	2	..	..	..	1	3	13	11	24	5	9	14	69	Madaripur.
19	3	..	..	3	2	..	1	..	15	36	19	55	12	11	23	70	Barisal.
..	1	1	..	..	1	..	1	..	6	6	4	10	10	10	20	71	Pirojpur.
24	1	2	..	2	..	3	1	2	12	24	29	53	37	32	69	72	Chittagong.
2	..	..	..	..	..	..	..	..	..	3	..	3	5	5	10	73	Noakhali.
3	1	..	..	1	..	1	2	1	9	11	7	18	27	10	37	74	Comilla.
14	1	..	..	..	1	..	..	..	13	19	12	31	33	15	48	75	Brahmanbaria.
2	1	1	..	..	..	..	1	..	2	5	5	10	7	4	11	76	Chandpur
695	276	228	21	390	356	558	149	28	1,695	3,108	2,386	5,494	..	..	..		
600	257	249	45	405	326	481	129	30	1,556	3,003	2,412	5,505	..	..	..		
+95	+19	−21	−24	−15	+30	+77	+20	−2	+139	+15	−26	−11	..	..	..		

District Health Officers. Taken as a whole, the statement possesses a relative value, although the figures for individual town probably only incorporated in the returns for districts as ordered in Government of Bengal, Municipal Department letter No. 118 San., dated the 8th February Education Department letter No. 98, dated the 26th March 1918.

R. B. KHAMBATA, M.R.C.S. (ENG.), L.R.C.P. (LOND.), D.P.H. (CAMB.), *Director of Public Health, Bengal.*

Vital Statistics for the month of May 1934 of the districts

Division.	No.	Districts.	Population under registration according to census of 1931.			Births registered.		Deaths							
			Male.	Female.	Total.	Number registered (excluding still-births).	Still-born number registered.	Cholera.	Small-pox.	Plague.	Malaria.	Enteric fever.	Measles.	Relapsing fever.	Kala-azar.
Burdwan	1	Burdwan	763,534	724,888	1,488,422	3,089	50	23	57	..	884	9	6	22	4
	2	Birbhum	466,598	470,048	936,646	2,754	74	1	12	..	1,046	41	6	1	2
	3	Bankura	524,690	524,643	1,049,333	3,138	9	21	14	..	675	6	20	4	2
	4	Midnapur	1,392,796	1,361,876	2,754,672	5,863	92	163	52	..	1,043	6	5	..	2
	5	Hooghly	479,217	455,416	934,633	1,599	1	99	125	..	484	58	5	1	9
	6	Howrah ..	433,011	410,636	843,647	1,569	9	199	61	..	69	8	2	1	4
Presidency	7	24-Parganas	1,154,286	1,074,531	2,228,817	4,696	5	624	28	..	103	16	4	..	21
	8	Nadia ..	720,894	678,608	1,399,502	3,015	58	61	14	..	1,054	5	11	..	15
	9	Murshidabad.	649,857	657,007	1,306,864	3,401	74	108	4	..	1,476	5	34	3	40
	10	Jessore	864,362	795,446	1,659,808	3,124	41	85	5	..	1,562	13	..	1	14
	11	Khulna ..	833,612	762,175	1,595,787	3,011	68	118	2	..	709	32	..	..	33
Rajshahi	12	Rajshahi	726,117	675,837	1,401,954	2,783	62	13	35	..	1,920	18	19	1	11
	13	Dinajpur	912,329	823,947	1,736,276	4,669	23	13	35	..	1,660	39	6	6	205
	14	Jalpaiguri	521,824	442,571	964,395	2,494	150	4	5	..	897	27	15	10	9
	15	Darjeeling	158,030	140,420	298,450	907	56	..	3	..	272	..	2	..	12
	16	Rangpur	1,343,786	1,230,250	2,574,036	4,822	278	14	223	..	2,589	33	65	16	108
	17	Bogra ..	548,496	523,104	1,071,600	1,171	44	25	46	..	411	63	51	58	44
	18	Pabna .	709,076	682,207	1,391,283	2,917	124	9	250	..	1,434	23	2	2	17
	19	Malda ..	510,421	510,612	1,021,033	1,976	16	..	8	..	1,324	3	1	..	21
Dacca ..	20	Dacca ..	1,642,626	1,617,244	3,259,870	5,331	135	55	74	..	1,010	23	18	..	71
	21	Mymensingh	2,594,444	2,408,565	5,003,009	9,713	378	173	83	..	2,160	24	21	21	67
	22	Faridpur	1,181,717	1,138,088	2,319,805	4,289	76	322	7	..	1,771	24	16	5	41
	23	Bakarganj	1,475 688	1,416,687	2,892,375	6,137	35	1,624	3	..	451	33	30	33	139
Chittagong	24	Chittagong	837,839	906,043	1,743,882	3,516	178	49	..	..	321	58	3	14	27
	25	Noakhali	851,010	842,646	1,693,656	3,834	219	344	35	..	486	13	10	7	90
	26	Tippera ..	1,551,694	1,483,176	3,034,870	5,862	246	354	19	..	745	48	27	3	118
	27	Chittagong Hill Tracts.													Not
		Total of month for Bengal.	23,875,876	22,779,347	46,655,223	95,080	2,496	4,501	1,200	..	27,276	628	379	214	1,126
		Total of corresponding month of previous year.	..	..	..	104,870	2,656	8,768	2,018	..	24,556	718	423	358	788
		Increase + or decrease —.	..	..	..	—9,190	—160	+733	—818	..	+2,720	—90	—44	—144	+348

Remarks.—1. The above table is compiled from returns collected by the Subdivisional Officers and submitted to the Director of individual district probably only approximate to the actual.
2. The vital statistics of municipalities with a population of less than 10,000 have been included in this statement with
3. Divisional totals and the birth and death ratios per mille per annum have been omitted from this statement according to

Calcutta, the 4th January 1935.

excluding towns with a population of 10,000 and over in Bengal.

registered.

Other fevers.	Dysentery.	Diarrhœa.	Influenza.	Pneumonia.	Phthisis.	Other respiratory diseases.	Injuries including suicide.	Deaths from child-birth.	Other causes.	Total of all causes.			Total of corresponding month of previous year.			No.	Districts.
										Male.	Female.	Total.	Male.	Female.	Total.		
830	49	71	13	160	42	76	66	15	406	1,376	1,363	2,739	1,394	1,328	2,722	1	Burdwan.
863	22	33	11	80	35	93	36	20	212	1,240	1,274	2,514	885	840	1,725	2	Birbhum.
593	17	115	14	136	44	70	37	22	482	1,174	1,098	2,272	857	747	1,604	3	Bankura.
1,239	121	163	7	229	44	77	127	36	636	2,067	1,883	3,950	2,039	1,858	3,897	4	Midnapur.
243	24	82	..	181	38	37	67	14	185	805	847	1,652	813	831	1,644	5	Hooghly.
244	6	107	1	44	39	48	56	2	143	515	519	1,034	550	516	1,066	6	Howrah.
1,449	26	56	1	88	23	35	110	11	477	1,039	1,493	3,132	1,402	1,271	2,673	7	24-Parganas.
402	39	22	2	105	36	37	108	24	259	1,555	1,239	2,794	1,587	1,349	2,936	8	Nadia.
605	40	11	3	58	14	19	79	10	375	1,560	1,333	2,893	1,297	1,099	2,396	9	Murshidabad.
248	12	16	5	63	33	24	116	23	191	1,289	1,122	2,411	1,723	1,451	3,174	10	Jessore.
506	35	31	13	42	29	26	107	18	442	1,148	1,055	2,203	1,097	994	2,091	11	Khulna.
561	11	8	..	52	12	12	58	15	248	1,654	1,340	2,994	1,827	1,504	3,331	12	Rajshahi.
1,052	34	48	10	194	38	56	69	48	142	1,978	1,677	3,655	1,505	1,372	2,877	13	Dinajpur.
886	72	102	15	359	40	47	22	40	195	1,498	1,247	2,745	1,297	1,104	2,401	14	Jalpaiguri.
314	135	27	22	39	41	12	8	2	153	532	510	1,042	507	443	950	15	Darjeeling.
1,954	72	136	8	135	36	80	52	62	214	3,108	2,689	5,797	2,577	2,381	4,958	16	Rangpur.
68	102	72	30	36	24	25	57	29	10	640	511	1,151	955	856	1,811	17	Bogra.
818	53	17	4	95	11	28	49	22	256	1,711	1,379	3,090	1,489	1,206	2,695	18	Pabna.
169	3	1	..	21	9	4	27	9	135	951	784	1,735	708	647	1,355	19	Malda.
1,647	211	120	24	75	40	58	74	34	668	2,264	1,938	4,202	2,764	2,448	5,212	20	Dacca.
3,316	337	102	4	80	72	93	113	49	970	4,113	3,572	7,685	5,546	4,934	10,480	21	Mymensingh.
1,292	126	38	2	111	20	59	73	20	554	2,442	2,039	4,481	2,317	1,989	4,306	22	Faridpur.
2,254	229	101	50	233	17	183	101	23	854	3,482	2,881	6,363	2,459	2,142	4,601	23	Bakarganj.
2,039	39	35	8	55	10	9	58	22	122	1,495	1,374	2,869	1,643	1,569	3,212	24	Chittagong.
1,778	192	67	18	92	13	66	70	44	439	1,917	1,847	3,764	1,566	1,431	2,997	25	Noakhali.
1,728	520	167	7	67	43	30	95	30	903	2,612	2,301	4,913	2,597	2,295	4,892	26	Tippera.
																27	Chittagong Hill Tracts.
under registration																	
27,104	2,545	1,748	272	2,830	803	1,304	1,835	644	9 671	44,765	39,315	84,080	..	..	..		
28,670	2,017	1,372	338	2,443	864	1 385	1 671	681	9,941	43,401	38,605	82,006	..	..	..		
−1,566	+528	+376	−66	+387	−61	81	+164	−37	−270	+1,364	+710	+2,074	..	..	..		

Public Health by the District Health Officers. Taken as a whole, the statement possesses a relative value, although the figures for those of the respective districts as ordered in Government of Bengal, Municipal Department, letter No. 118 San., dated the 8th February 1918, Government of India, Education Department, letter No. 93, dated the 26th March 1918.

R. B. KHAMBATA, M.R.C.S. (ENG.), L.R.C.P. (LOND.), D.P.H. (CAMB.), *Director of Public Health, Bengal.*

DEPARTMENT OF AGRICULTURE, BENGAL.

Dacca, the 11th January 1935.

Monthly Weather and Crop Report of Bengal for December 1934.

I. *Character of the season.*—During the month under review, the rainfall was generally above the normal throughout the Presidency. The usual rainfall statement is appended.

II. *Progress of agricultural operations.*—Sowing of spring crops was almost finished. Harvesting of winter rice was in brisk progress.

III. *State of standing crops.*—The state of standing crops was reported to be satisfactory, on the whole.

IV. *Prospects and probable outturn.*—The prospects of standing *rabi* crops were reported to be generally hopeful. The outturn of winter *til* was estimated at 87 per cent. of the normal.

V. *Damage to standing crops.*—No appreciable damage to standing crops was reported from any part of the province.

VI. *Condition of agricultural stock.*—The condition of live-stock was generally fair. Stray cases of cattle-disease were, however, reported from six districts of the Presidency.

VII. *Failure of pasturage and fodder.*—Insufficiency of fodder was reported from parts of Murshidabad and Midnapore.

VIII. *Prices of food-grains.*—During the second fortnight of the month the retail prices of common rice of the cheapest quality rose in two districts, fell in thirteen and remained stationary in the rest of the Presidency. The prices ranged from 10 seers per rupee at Darjeeling to 16 seers per rupee at Khulna and Faridpur.

IX. *Condition of agricultural population.*—The condition of agricultural population was, on the whole, fair, except in parts of Murshidabad and Birbhum, where distress continued.

K. McLEAN,

Director of Agriculture, Bengal (offg.).

Statement showing the normal and actual rainfall in each district during December 1934.

Division.	District.	Normal district rainfall for the month of December.	Actual district rainfall for the month of December 1934.	Variation from the normal.
		Inches.	Inches.	Inches.
Presidency	24-Parganas	0·21	0·43	+0·22
	Nadia	0·13	0·45	+0·32
	Murshidabad	0·10	2·32	+2·22
	Jessore	0·17	0·76	+0·59
	Khulna	0·14	0·74	+0·60
Burdwan	Burdwan	0·10	1·39	+1 29
	Birbhum	0·06	0·92	+0·86
	Bankura	0·08	0·44	+0·36
	Midnapore	0·13	0·36	+0·23
	Hooghly	0·21	0·86	+0·65
	Howrah	0·19	0·13	−0·06
Rajshahi	Rajshahi	0·07	0 50	+0·43
	Dinajpur	0·06	0·48	+0·42
	Jalpaiguri	0·20	0·35	+0·15
	Darjeeling	0·27	0·78	+0·51
Rajshahi—*concld.*	Rangpur	0·07	0·18	+0·11
	Bogra	0·07	0·72	+0·65
	Pabna	0·13	0·77	+0·64
	Malda	0·07	0·35	+0·28
Dacca	Dacca	0·18	0·90	+0·72
	Mymensingh	0·10	0·49	+0·39
	Faridpur	0·22	1·41	+1·19
	Bakarganj	0·29	0·53	+0·24
Chittagong	Chittagong	0·56	0·26	−0·30
	Tippera	0·20	0·91	+0·71
	Noakhali	0·37	1·16	+0·79
	Chittagong Hill Tracts.	0·30	0·07	−0·23
Cooch Behar	..	0·11	0·07	−0·04
Tripura State	..	0·30	0·44	+0·14

DISTRICT REPORTS ON WEATHER AND CROPS.

For the week ending on the 9th January 1935.

Summary.—Excepting light showers in places the weather was dry. Harvesting of winter paddy is nearly finished; threshing continues in full swing. Prospects of standing crops are generally satisfactory. During the week ending Saturday, the 5th January 1935, 2,000 persons attended different relief centres and 849 persons received gratuitous relief in the distressed areas of Murshidabad. In Birbhum, 4,419 men were employed on test relief works on Saturday, the 5th January 1935. The average price of common rice for the province has fallen by about 3·37 per cent. as compared with that of the previous week.

Serial No.	District and subdivision.	Rainfall.	Price of common rice, in seers, per rupee.		Character of the weather, condition of crops, etc.
			This week.	Previous week.	
1	2	3	4	5	6
		Inches.			
1	24-Parganas ..	Nil	10 11/16	10 11/16	Weather seasonable. No damage to crops is reported. Fodder and water are sufficient Export and import normal.
	Diamond Harbour	Nil	14	14	
	Barrackpore ..	Nil	10	10	
	Baraset ..	Nil	10	10	
	Basirhat ..	Nil	13	13	
2	Nadia ..	Nil	11	11½	Weather seasonable. Prospects of standing crops are fair. No large export or import. Fodder and water are sufficient.
	Kushtia ..	Nil	11½	11½	
	Meherpur ..	Nil	11	11	
	Chuadanga ..	Nil	11	11	
	Ranaghat ..	Nil	10	10	
3	Murshidabad ..	Nil	11½	11	Weather cold. Prospects of standing crops are not favourable in Kandi subdivision. No large export or import. Stock of rice, fodder and water are sufficient. Cattle-disease is reported from Jangipur and Kandi subdivisions. Test relief works continue. 1,768 men, 161 women and 71 children attended relief centres during the week ending Saturday, the 5th January 1935. Number of persons receiving gratuitous relief in the distressed areas was 385, 291 and 173 in Kandi, Jangipur and Lalbagh, respectively, during the week ending Saturday, the 5th January 1935.
	Lalbagh ..	Nil	13	13	
	Jangipur ..	Nil	13	13	
	Kandi ..	Nil	13	12½	
4	Jessore ..	Nil	11	11	Weather seasonable. Prospects of standing crops are fair. No large export or import. Fodder and water are sufficient.
	Jhenidah ..	Nil	13	13	
	Magura ..	Nil	12	12	
	Narail ..	Nil	14	14	
	Bongaon ..	Nil	10	10	
5	Khulna ..	Nil	13	13	Weather seasonable. Its effects on crops are good. Fodder and water are sufficient.
	Satkhira ..	Nil	15	15	
	Bagerhat ..	Nil	11	10	

Serial No.	District and sub-division.	Rainfall.	Price of common rice, in seers, per rupee.		Character of the weather, condition of crops, etc.
			This week.	Previous week.	
1	2	3	4	5	6
		Inches.			
6	Burdwan ..	Nil	11	11	Weather cold. Condition of crop is not satisfactory. Fodder and water are sufficient.
	Asansol ..	0·10	10½	10	
	Katwa ..	Nil	12	11	
	Kalna ..	Nil	10½	10	
7	Birbhum ..	0·03	13	13	Weather seasonable. Prospects of *rabi* crops are fair. Fodder and water are sufficient. 4,419 men were employed on test relief works on Saturday, the 5th January 1935.
	Rampurhat ..	Nil	10	10	
8	Bankura ..	0·02	12½	10	Weather seasonable. Threshing of winter paddy continues. Prospects of standing crops are fair. Fodder and water are sufficient. Cattle-disease is reported from Onda and Chhatna police-stations.
	Vishnupur ..	0·01	12½	10	
9	Midnapore ..	Nil	14	12½	Weather seasonable. Harvesting of winter paddy is progressing. Condition of sugarcane is satisfactory. Fodder and water are sufficient.
	Contai ..	Nil	15	16	
	Tamluk ..	Nil	10	10	
	Ghatal ..	Nil	12½	12½	
	Jhargram ..	(*n*)	(*n*)	13	
10	Hooghly ..	Nil	11	11	Weather seasonable. Fodder and water are sufficient.
	Serampore ..	Nil	10	10	
	Arambagh ..	Nil	13	11½	
11	Howrah ..	Nil	10	10	Weather cold; its effects are good. Harvesting of winter paddy continues. Fodder and water are sufficient.
	Uluberia ..	Nil	11	11	
12	Rajshahi (Rampur Boalia).	Nil	12	12	Weather seasonable and favourable to standing crops. No damage is reported. Fodder and water are sufficient.
	Naogaon ..	(*n*)	(*n*)	10½	
	Nator ..	Nil	12	12	
13	Dinajpur ..	0·04	15½	10	Weather seasonable. Fodder and water are sufficient.
	Thakurgaon ..	0·10	15	15	
	Balurghat ..	Nil	13 1/16	13	
14	Jalpaiguri ..	0·24	14	13	Weather seasonable. Prospects of standing crops are fair. No large export or import. Fodder and water are sufficient.
	Alipur ..	0·13	14	13	

(*n*) Not reported.

Serial No.	District and sub-division.	Rainfall.	Price of common rice, in seers, per rupee.		Character of the weather, condition of crops, etc.
			This week.	Previous week.	
1	2	3	4	5	6
		Inches.			
15	Darjeeling ..	1·00	8	8	Weather fair. Fodder and water are sufficient. Cattle-disease exists at places.
	Kurseong ..	1·07	8	7½	
	Siliguri ..	0·61	13	13	
	Kalimpong ..	0·72	7½	7	
16	Rangpur ..	Nil	13	13	Weather seasonable. Prospects of standing crops are fair. Harvesting of *aman* paddy is finished. No large export or import. Fodder and water are sufficient.
	Nilphamari ..	Nil	13	13	
	Kurigram ..	Nil	13	13	
	Gaibandha ..	Nil	12	(n)	
17	Bogra ..	Nil	14	14½	Weather seasonable. Condition of standing crops is fair. No damage is reported. Fodder and water are sufficient.
18	Pabna ..	Nil	10½	10½	Weather cold. Condition of standing crops is satisfactory. Fodder and water are sufficient.
	Serajganj ..	Nil	10	10	
19	Malda ..	Nil	14	13	Weather seasonable. Prospects of standing crops are fair. Harvesting of *Kalai* has commenced. Fodder and water are available.
20	Cooch-Behar ..	0·12	16	14	Weather seasonable. Transplantation of tobacco seedlings is almost finished and harvesting of winter paddy continues. Preparation of lands for jute and autumn paddy has commenced in places in Mekliganj subdivision. Prospects and condition of standing crops are fair. Fodder and water are sufficient.
21	Dacca ..	Nil	12	12	Rainfall at North Sadar (Kapasia) nil. Weather seasonable and its effects on agricultural operations are good. Harvesting of *aman* paddy is nearly finished. No large export or import. Prospects of crops are good. Fodder and water are available.
	Manikganj ..	Nil	11½	11½	
	Narayanganj ..	Nil	10½	10½	
	Munshiganj ..	Nil	12½	11½	

(n) Not reported.

Serial No.	District and subdivision.	Rainfall.	Price of common rice, in seers, per rupee.		Character of the weather, condition of crops, etc.
			This week.	Previous week.	
1	2	3	4	5	6
		Inches.			
22	Mymensingh ..	Nil	11	10	Weather seasonable. Condition of crops is satisfactory. Fodder and water are available.
	Jamalpur ..	Nil	13½	13½	
	Tangail ..	Nil	10½	10½	
	Netrakona ..	Nil	11	11	
	Kishorganj ..	Nil	11	10	
23	Faridpur ..	0·00	13	13	Weather seasonable. Condition of standing crops is fair. Fodder and water are sufficient.
	Goalundo (Rajbari).	0·00	9½	9½	
	Madaripur ..	0·00	13½	13½	
	Gopalganj (*a*) ..	0·00	15	16	
24	Bakarganj (Barisal).	Nil	13	11½	Weather seasonable. Prospects of standing crops are good. Fodder and water are sufficient.
	Pirojpur ..	Nil	10½	10½	
	Patuakhali ..	(*n*)	(*n*)	12	
	Dakshin Shabazpur (Bhola).	Nil	13	10½	
25	Chittagong ..	Nil	12 13*	12 13*	Weather seasonable. Harvesting of *aman* crops is completed. Transplantation of *rabi* crops is in progress. Prospects are favourable. Fodder and water are sufficient. Panga salt sells at 13 seers per rupee at Sadar and 12 seers per rupee at Cox's Bazar.
	Cox's Bazar ..	Nil	12½	12	
26	Tippera (Comilla)	Nil	12½	11	Prospects of crops are fair. Cattle-disease is reported from Matlab and Nasirnagar police-stations.
	Brahmanbaria ..	Nil	11½	10½	
	Chandpur ..	Nil	13⅞	13 15/16	
27	Noakhali ..	Nil	13	13½	Weather seasonable. Harvesting of *aman* crop is almost over. Condition of standing *rabi* crops is fair. Fodder and water are sufficient.
	Feni ..	Nil	14	14	
28	Chittagong Hill Tracts.	(*n*)	(*n*)	12	Report not received.
29	Tripura State ..	Nil	13½	12½	Weather seasonable. Condition of cattle is good. Harvesting of winter paddy is nearly complete and that of *til* and cotton continues. Fodder and water are sufficient. Cotton sells at Rs. 8 to Rs. 15 and jute at Rs. 2-8 to Rs. 5 per maund.

(*n*) Not reported.

*(*a*) The rainfall at Haridaspur, which is very near to Gopalganj, is shown here.

* Burma rice.

J. C. BASU, for *Director of Agriculture, Bengal.*

Dacca, the 14th January 1935.

Wholesale prices-current of food grains, gur, etc., in the undermentioned marts of Bengal for the second half of December 1934.

Marts.	Paddy local (best quality).			Paddy local (common quality).			Rice local (best quality).		
	Present return.	Next preceding return.	Corresponding return of last year.	Present return.	Next preceding return.	Corresponding return of last year.	Present return.	Next preceding return.	Corresponding return of last year.
1	2	3	4	5	6	7	8	9	10
	Rs. a. p.	Rs. a. p.	Rs. a. p.	Rs. a. p.	Rs. a. p.	Rs. a. p.	Rs. a. p.	Rs. a. p.	Rs. a. p.
Calcutta	2 8 0	2 10 0	2 4 0	2 6 0	2 6 0	2 0 0	5 8 0	5 8 0	5 8 0
Burdwan	1 14 0	2 0 0	2 0 0	1 12 0	1 14 0	1 13 0	4 6 0	4 8 0	4 6 0
Midnapore	1 15 0	2 5 0	1 10 0	1 10 0	1 15 0	1 8 0	4 4 0	4 4 0	3 8 0
Chittagong	1 12 0	1 12 0	1 8 0	1 8 0	1 8 0	1 4 0	4 10 0	4 10 0	4 8 0
Dacca	2 6 0	1 14 0	2 0 0	2 0 0	1 8 0	1 14 0	3 12 0	4 0 0	4 0 0
Pabna	2 0 0	2 10 6	1 12 0	1 14 0	2 2 6	1 7 0	4 8 0	4 8 0	3 8 0
Rangpur	2 0 0	2 4 0	2 4 0	1 12 0	2 0 0	1 14 0	5 0 0	5 0 0	5 0 0
Serajganj (Pabna)	..	..	..	..	..	..	..	..	..
Sarisabari (Mymensingh) ..	..	..	..	..	..	..	..	..	..
Narayanganj (Dacca)	..	..	..	..	..	..	..	..	..

Marts.	Rice local (common quality).			Wheat.			Raw cotton.		
	Present return.	Next preceding return.	Corresponding return of last year.	Present return.	Next preceding return.	Corresponding return of last year.	Present return.	Next preceding return.	Corresponding return of last year.
	11	12	13	14	15	16	17	18	19
	Rs. a. p.	Rs. a. p.	Rs. a. p.	Rs. a. p.	Rs. a. p.	Rs. a. p.	Rs. a. p.	Rs. a. p.	Rs. a. p.
Calcutta	4 12 0	4 12 0	4 0 0	(n)	3 4 0 to 3 6 0	(n)	(n)	16 12 0	(n)
Burdwan	3 6 0	3 8 0	3 4 0	..	..	..	..	..	..
Midnapore	3 2 0	3 2 0	2 8 0	..	..	..	..	..	..
Chittagong	3 7 0	3 7 0	3 4 0	..	..	..	..	..	..
Dacca	3 0 0	3 6 0	3 12 0	..	..	..	..	..	..
Pabna	3 2 0	3 12 0	2 8 0	..	..	..	..	..	..
Rangpur	4 6 0	4 6 0	3 12 0	..	..	..	..	..	..
Serajganj (Pabna)	..	..	..	..	..	..	..	..	..
Sarisabari (Mymensingh) ..	..	..	..	..	..	..	..	..	..
Narayanganj (Dacca)	..	..	..	..	..	..	..	..	..

Marts.	Coal.			Raw jute (weighted average).			*Gur* (sugarcane).		
	Present return.	Next preceding return.	Corresponding return of last year.	Present return.	Next preceding return.	Corresponding return of last year.	Present return.	Next preceding return.	Corresponding return of last year.
	20	21	22	23	24	25	26	27	28
	Rs. a. p.	Rs. a. p.	Rs. a. p.	Rs. a. p.	Rs. a. p.	Rs. a. p.	Rs. a. p.	Rs. p. a.	Rs. a. p.
Calcutta	0 6 6	0 6 6	0 6 6	4 9 0	4 7 8	4 3 6	4 0 0	4 10 6	5 0 0
Burdwan	..	..	..	..	..	..	4 8 0	4 8 0	5 8 0
Midnapore	..	..	..	..	..	..	4 8 0	4 8 0	3 8 0
Chittagong	..	..	..	..	..	..	8 0 0	8 0 0	5 12 0
Dacca	..	..	..	..	..	..	5 0 0	5 4 0	5 0 0
Pabna	..	..	..	..	..	..	4 0 0	4 0 0	2 12 0†
Rangpur	..	..	..	..	..	..	4 0 0 to 5 4 0	4 0 0 to 5 4 0	4 0 0 to 4 8 0
Serajganj (Pabna)	..	..	..	3 13 0	3 10 0	3 3 0	..	..	..
Sarisabari (Mymensingh) ..	..	..	..	3 8 0 to 5 4 0	4 14 0 to 5 0 0	2 14 0 to 4 6 0	..	..	..
Narayanganj (Dacca)	..	..	..	3 10 0 to 4 12 0	3 0 0 to 4 10 0	2 12 0 to 4 6 0	..	..	..

(n) Not reported. †New.

Dacca, the 10th January 1935.

J. C. BASU, for *Director of Agriculture, Bengal.*

Prices-current (retail) of common rice and salt in the districts of Bengal for the second half of December 1934.

Districts and Marts.	Quantity per rupee in seers of eighty tolas.								
	Common rice.						Salt.		
	Average.			Cheapest.					
	Present return.	Next preceding return.	Corresponding return of last year.	Present return.	Next preceding return.	Corresponding return of last year.	Present return.	Next preceding return.	Corresponding return of last year.
	S. Ch.	S. Ch.	S. Ch.	S. Ch.	S. Ch.	S. Ch.	S. Ch.	S. Ch.	S. Ch.
Presidency Division.									
24-Parganas—									
1 Chetla Hat ..	10 13	10 6	13 5	11 13	11 7	14 6	16 0	17 9	17 9
2 Mogra Hat ..	10 11 (a) 14 9	11 0 (a) 13 5	10 11	11 13	(a) 13 14	(a) 16 13	16 0	16 0	16 0
3 Calcutta-Beliaghata	8 8	8 8	9 10	12 4	12 4	11 7	16 0	16 0	13 0
Nadia—									
4 Goari	10 10	10 10	13 0	13 4	13 4	(n)	13 0†	13 0†	13 0†
5 Ranaghat ..	10 0	10 0	11 8	13 0	13 0	(n)	14 0†	14 0†	13 0†
Murshidabad—									
6 Berhampore ..	11 0	10 8	14 0	12 0	11 8	15 8	14 0*	14 0*	14 0*
7 Kandi	11 8	11 0	15 4	12 0	11 8	16 8	14 0	14 0	14 8
8 Jangipur ..	11 8	11 0	16 8	12 8	12 0	17 8	15 0	15 0	16 0
Jessore—									
9 Sadar	11 0	11 0	13 0	12 0	12 0	14 8	14 0†	15 0†	14 0* 15 0
10 Bongaon ..	10 0	9 4	11 0	12 8	12 6	13 0	14 8 13 0*	14 8 13 0*	13 8 12 8*
Khulna—									
11 Sadar	(a) 13 0	10 0	13 0	16 0	14 0	16 0	13 0 12 0*	13 0 12 0*	13 0†
12 Bagerhat ..	(a) 16 0	9 8	10 0	(a) 18 0	10 0	11 0	13 8	13 8	13 8
Burdwan Division.									
Burdwan—									
13 Sadar	10 8	11 0	11 0	11 8	12 0	12 0	14 0†	14 0†	13 8 16 0*
14 Kalna	9 6	9 6	10 10	10 10	(a) 11 6	(a) 13 5	16 0†	16 0†	16 0
Birbhum—									
15 Suri	12 0	12 0	16 0	13 0	13 0	17 0	14 0	14 0	14 0
16 Rampurhat ..	10 0	10 0	(n)	11 0	11 0	(n)	16 0	16 0	(n)
Bankura—									
17 Sadar	12 8	12 0	15 0	14 0	14 0	16 0	14 0	14 0	14 0†
18 Vishnupur ..	10 0	10 8	(a) 16 0	11 0	11 8	(a) 17 8	13 0	13 0	13 0

* Karkach. (a) New. (n) Not reported.

N.B.—The prices of Karkach and Liverpool salt tally with each other in marts marked †.

Prices-current (retail) of common rice and salt in the districts of Bengal for the second half of December 1934.

Districts and Marts.	Quantity per rupee in seers of eighty tolas.								
	Common rice.						Salt.		
	Average.			Cheapest.					
	Present return.	Next preceding return.	Corresponding return of last year.	Present return.	Next preceding return.	Corresponding return of last year.	Present return.	Next preceding return.	Corresponding return of last year.
	S. Ch.	S. Ch.	S. Ch.	S. Ch.	S. Ch.	S. Ch.	S. Ch.	S. Ch.	S. Ch.
Burdwan Division—*concld.*									
Midnapore—									
19 Sadar	12 8	12 8	15 0	13 0	13 0	16 0	14 0	14 0	16 0*
20 Contai	(a) 16 0	10 0	16 0	(a) 18 0	14 0	18 0	(b) 10 8	16 0‡	21 0
Hooghly—									
21 Sadar	11 0	11 0	13 0	13 0	13 0	14 12	14 0	14 0	15 8
22 Arambagh ..	11 8	11 8	13 4	12 8	12 8	14 0	15 4 14 10*	15 4 14 12*	14 8 14 0*
Howrah—									
23 Sadar	10 0	10 0	12 8	12 0	12 0	13 4	16 0	15 0	16 0
24 Uluberia ..	11 0	11 0	12 0	12 8	11 8	13 0	16 0	15 0	16 0
Rajshahi Division.									
Rajshahi—									
25 Rampur-Boalia ..	12 0	10 12	12 8	13 0	12 6	16 0	13 4†	13 4†	13 8 13 0*
26 Nator	(a) 12 0	9 12	(n)	(a) 14 4	10 8	13 8	12 0†	12 0†	12 0†
27 Dinajpur—Railbazar	(a) 14 4	11 0	15 2	(a) 15 8	11 6	16 5	13 0†	13 9 13 0*	13 0†
28 Jalpaiguri—Sadar ..	Hat. 13 0	(a) 13 0	12 0	14 0	(a) 14 0	16 0	13 0	13 0	13 0
Darjeeling—									
29 Sadar	9 8	9 8	9 0	10 0	10 0	11 0	10 0 9 8*	10 0 9 8*	10 0 8 0*
30 Siliguri ..	12 0	12 0	10 0	13 0	13 0	11 0	12 0†	12 0†	11 0†
Rangpur—									
31 Sadar	10 2	10 0	12 0	10 2	10 2	12 0	13 0	13 0	12 8
32 Nilphamari ..	10 0	10 0	(n)	12 0	(a) 12 0 10 8	10 0	12 8*	12 8*	12 8*
33 Bogra—Sadar ..	(a) 14 4	9 6	11 4	15 0	14 4	15 12	14 2	14 2	12 0
Pabna—									
34 Sadar	10 0	10 4	13 4	13 4	12 0	14 12	14 8†	14 0†	14 12†
35 Serajganj ..	10 0	10 0	12 0	11 8	11 8	13 0	16 0 15 0*	16 0 15 0*	16 0 15 0*
Malda—									
36 Sadar	(a) 13 0	10 8	13 0	(a) 14 8	11 8	15 8	14 8 14 0*	14 8 14 0*	14 0†
37 Balia—Nawabganj	(a) 14 5	11 0	16 0	(a) 15 0	12 0	18 0	14 8 14 0*	14 12 14 0*	15 0 14 0*

*Karkach. (n) Not reported. ‡ Profuse supply.

N. B.—The prices of Karkach and Liverpool salt tally with each other in marts marked †.

(a) (New). (b) Owing to non-manufacture of country salt.

Prices-current (retail) of common rice and salt in the districts of Bengal for the second half of December 1934.

Districts and Marts.	Quantity per rupee in seers of eighty tolas.								
	Common rice.						Salt.		
	Average.			Cheapest.					
	Present return.	Next preceding return.	Corresponding return of last year.	Present return.	Next preceding return.	Corresponding return of last year.	Present return.	Next preceding return.	Corresponding return of last year.
	S. Ch.	S. Ch.	S. Ch.	S. Ch.	S. Ch.	S. Ch.	S. Ch.	S. Ch.	S. Ch.
Dacca Division.									
Dacca—									
38 Sadar	13 0	13 0	10 0	14 8	14 0	12 8	12 8 13 0*	13 0 13 4*	13 5 14 0*
39 Mirkadim ..	12 8	11 8	12 8	13 0	13 0	13 8	15 0*	14 8*	13 4*
Mymensingh—									
40 Nasirabad ..	11 8	12 0	10 12	13 4	13 0	12 0	11 0*	13 0*	12 0*
41 Netrakona ..	11 6	11 0	(*n*)	13 2	11 8	10 10	13 5 11 6*	14 0 12 4*	14 8 12 8*
Faridpur—									
42 Sadar ..	13 0	12 4	12 0	16 0	14 8	13 0	12 0	12 0	12 8
43 Rajbari ..	9 8	9 8	11 0	10 0	11 8	13 0	13 8	12 0	12 0
Bakarganj—									
44 Barisal ..	10 0	10 0	11 8	12 0	12 0	13 0	15 0†	15 0†	16 0 14 8*
45 Pirojpur ..	10 0	10 0	12 0	10 2	10 2	12 4	11 0†	11 0†	11 0†
Chittagong Division.									
Tippera—									
46 Comilla ..	10 11	10 0	11 7	14 9	12 5	13 5	12 13 10 10*	12 13 10 10*	12 13 10 10*
47 Chandpur ..	13 5	13 5	13 5	14 8	14 8	14 8	13 5	13 5	12 4*
Noakhali—									
48 Kalitara Hat ..	10 0	10 0	(*n*)	13 8	13 0	(*n*)	13 0 10 8*	13 0 10 8*	13 5 (*n*)
49 Feni Hat ..	10 12	10 12	13 0	12 13	(*a*) 12 13	14 0	14 0 10 0*	14 0 10 0*	14 0 10 0*
Chittagong—									
50 Sadar	11 0	11 0	10 0	12 8	12 8	14 0	13 0	13 0	16 0
51 Cox's Bazar ..	12 8	12 0	13 0	13 8	13 0	14 0	13 0	13 0	13 0
52 Chittagong Hill Tracts —Rangamati ..	12 0	12 0	14 0	13 0	14 0	18 0	8 0* 13 0	8 0* 13 0	6 8* 13 0

* Karkach. (*a*) New. (*n*) Not reported.

N. B.—The prices of Karkach and Liverpool salt tally with each other in marts marked †.

Dacca, the 10th January 1935. J. C. BASU, for *Director of Agriculture, Bengal.*

Vital statistics of towns with a population of 50,000 and over of the Bengal Presidency for the week ending Saturday, the 22nd December 1934.

Districts.	Nos.	Towns.	Population under registration according to Census of 1931.			Births registered.		Deaths registered.																							
			Male.	Female.	Total.	Number registered (excluding still-births).	Still-births registered.	Cholera.	Small-pox.	Plague.	Cerebro spinal meningitis.	Malaria.	Enteric fever.	Measles.	Relapsing fever.	Kala-azar.	Other fevers.	Dysentery.	Diarrhœa.	Influenza.	Pneumonia.	Phthisis.	Other respiratory diseases.	Injuries including suicide.	Deaths from child-birth.	Other causes.	Total of all causes.			Total of corresponding week of the previous year.		
																										Male.	Female.	Total.	Male.	Female.	Total.
Calcutta ..	1	Calcutta ..	814,948	381,786	1,196,734	748	54	14	9	..	24	14	11	..	..	1	29	31	13	16	46	53	132	12	4	338	415	332	747	394	360	754
Burdwan] ..	2	Asansol Mining Settlement.	209,544	173,136	382,680	231	3	..	..	..	..	5	..	..	..	..	69	6	1	..	10	1	6	1	1	59	85	74	159	69	57	126
Howrah ..	3	Howrah ..	145,120	79,753	224,873	123	6	2	..	..	..	6	4	..	..	1	11	14	10	..	23	9	18	6	4	74*	99	83	182	88	99	187
Dacca ..	4	Dacca ..	79,365	59,153	138,518	139	8	7	..	..	..	1	1	..	..	1	..	4	2	..	9	1	10	2	1	28	36	31	67	35	23	58
24-Parganas ..	5	Bhatpara ..	60,134	24,841	84,975	29	1	..	..	..	..	..	..	..	..	..	12	2	1	..	4	..	2	..	..	3	13	11	24	19	10	29
Chittagong ..	6	Chittagong ..	35,049	18,107	53,156	62	3	..	..	..	..	..	..	..	..	..	1	1	..	..	..	..	..	..	..	10	7	5	12	7	7	14

* Including one death from beri-beri.

R. B. KHAMBATA, M.R.C.S. (ENG.), L.R.C.P. (LOND.), D.P.H. (CAMB.), *Director of Public Health, Bengal.*

Calcutta, the 5th January 1935.

Vital statistics of towns with a population of 50,000 and over of the Bengal Presidency for the week ending Saturday, the 29th December 1934.

Districts.	Nos.	Towns.	Population under registration according to census of 1931.			Births registered.		Deaths registered.																							
								Cholera.	Small-pox.	Plague.	Cerebro spinal meningitis.	Malaria.	Enteric fever.	Measles.	Relapsing fever.	Kala-azar.	Other fevers.	Dysentery.	Diarrhœa.	Influenza.	Pneumonia.	Phthisis.	Other respiratory diseases.	Injuries including suicide.	Deaths from child-birth.	Other causes.	Total of all causes.			Total of corresponding week of the previous year.		
			Male.	Female.	Total.	Number registered (excluding still-births).	Still-births registered.																			Male.	Female.	Total.	Male.	Female.	Total.
Calcutta ..	1	Calcutta ..	814,948	381,786	1,196,734	643	55	21	9	..	18	15	13	2	..	7	31	24	7	11	90	42	73	9	3	344	379	340	719	408	344	752
Burdwan ..	2	Asansol Mining Settlement.	209,544	173,136	382,680	244	5	..	..	..	..	1	1	..	..	..	94	4	..	..	6	2	4	4	4	71	97	94	191	89	79	168
Howrah ..	3	Howrah ..	145,120	79,753	224,873	96	5	4	1	..	..	3	5	..	..	2	5	18	17	..	16	4	19	3	3	57*	87	70	157	69	74	143
Dacca ..	4	Dacca ..	79,365	59,153	138,518	127	..	3	..	..	..	1	1	..	..	4	5	1	1	..	10	..	12	3	1	31	37	36	73	32	35	67
24-Parganas	5	Bhatpara ..	60,134	24,841	84,975	38	..	..	..	..	..	2	..	..	..	..	11	..	..	..	4	1	..	..	..	4	15	7	22	12	7	19
Chittagong ..	6	Chittagong	35,049	18,107	53,156	7	1	..	..	..	..	..	1	..	..	..	8	1	..	..	1	..	..	1	..	7	10	9	19	13	12	25

* Including six deaths from beri-beri.

Calcutta, the 9th January 1935.

R. B. KHAMBATA, M.R.C.S. (ENG.), L.R.C.P. (LOND.), D.P.H. (CAMB.), *Director of Public Health, Bengal.*

Vital statistics of towns with a population of 50,000 and over of the Bengal Presidency for the week ending Saturday, the 5th January 1935.

Districts.	Nos.	Towns.	Population under registration according to Census of 1931.			Births registered.		Deaths registered.																							
			Male.	Female.	Total.	Number registered (excluding births).	Still-births registered.	Cholera.	Small-pox.	Plague.	Cerebro spinal meningitis.	Malaria.	Enteric fever.	Measles.	Relapsing fever.	Kala-azar.	Influenza.	Other fevers.	Dysentery.	Diarrhœa.	Pneumonia.	Phthisis.	Other respiratory diseases.	Injuries including suicide.	Deaths from child-birth.	Other causes.	Total of all causes.			Total of corresponding week of the previous year.		
																										Male.	Female.	Total.	Male.	Female.	Total.
Calcutta ..	1	Calcutta ..	814,948	381,786	1,196,734	605	48	21	10	..	13	13	5	3	..	4	13	26	40	11	113	48	80	15	3	357	429	346	775	410	285	695
Burdwan ..	2	Asansol Mining Settlement.	209,544	173,136	382,680	187	8	..	..	..	..	..	1	..	..	..	..	57	6	2	7	4	7	..	4	59	74	73	147	78	58	136
Howrah ..	3	Howrah ..	145,120	79,753	224,873	135	8	4	..	..	..	3	2	1	..	..	..	5	14	15	22	4	19	5	..	61	78	77	155	80	73	153
Dacca ..	4	Dacca ..	79,365	59,153	138,518	116	1	6	..	..	..	..	..	..	..	3	..	2	3	4	11	3	15	1	1	22	29	42	71	46	33	79
24-Parganas ..	5	Bhatpara ..	60,134	24,841	84,975	42	1	..	..	..	..	..	1	..	..	..	..	5	..	..	1	1	1	..	..	3	6	6	12	6	8	14
Chittagong ..	6	Chittagong	35,049	18,107	53,156	24	2	1	..	..	..	..	2	..	..	..	..	2	1	1	..	..	..	..	1	3	7	4	11	12	9	21

R. B. KHAMBATA, M.R.C.S. (ENG.), L.R.C.P. (LOND.), D.P.H. (CAMB.), *Director of Public Health, Bengal.*

Calcutta, the 12th January 1935.

IRRIGATION DEPARTMENT.

Statement showing heights above P. W. D. datum and low water in the rivers Ganges, Bhagirathi, Jalangi and Brahmaputra for the

Date.	River Ganges.													
	Mirzapur. Zero of gauge is 200 00 ft. above P. W. D. datum.		Benares. Zero of gauge is 197·05 ft. above P. W. D. datum.		Buxar.* Zero of gauge is 169·91 ft above Bengal P. W. D. datum.		Dinapore. Zero of gauge is 135·51 ft. above P. W. D. datum.		Monghyr. Zero of gauge is at P. W. D. datum.		Rajmahal. Zero of gauge is at P. W. D datum.	
	Distance in miles.	From Allahabad, 86.	From Allahabad, 134.	From Mirzapur, 48.	From Benares, 90.		From Benares, 177.	From Buxar, 87.	From Benares, 287.	From Dinapore, 110.	From Benares, 407.	From Monghyr, 120
	Highest guage reading.	2nd September 1916. 265·97 ft.	2nd September 1916. 244·55 ft.		7th September 1919. 203·40 ft.		21st August 1923. 172·41 ft.		8th September 1901. 129·60 ft.		15th August 1913. 90 37 ft.	
	Lowest gauge reading.	11th April 1878. 198 92 ft.	20th May 1879. 191·70 ft.		15th May 1914. 101·65 ft.		26th April 1902. 136 11 ft.		2nd May 1914. 95·75 ft.		12th May 1916. 55·46 ft.	
		Height above zero of gauge.	Height above P. W. D. datum.	Height above zero of gauge.	Height above P. W. D. datum.	Height above zero of gauge.	Height above P. W. D. datum.	Height above zero of gauge.	Height above P. W. D. datum.	Height above zero of gauge.	Height above P. W. D. datum.	Height above zero of gauge.	Height above P. W. D datum
1	2	3	4	5	6	7	8	9	10	11	12	13	14
				(Below zero.)									
1st ..	..	10·83	210·83	2·08	194·97	2·75	172·66	8·40	143·91	100·00	100·00	58·60	58·60
2nd ..	..	10·79	210·79	2·17	194·88	2·67	172·58	8·40	143·91	99·80	99·80	58·40	58·40
3rd ..	..	10·75	210·75	2·17	194·88	2·58	172·49	8·40	143·91	99·60	99·60	58·30	58·30
4th ..	..	10·71	210·71	2·25	194·80	2·58	172·49	8·40	143·91	99·40	99·40	58·20	58·20
5th ..	..	10·67	210·67	2·25	194·80	2·58	172·49	8·40	143·91	99·40	99·40	58·15	58·15
6th ..	..	10·67	210·67	2·33	194·72	2·58	172·49	8·30	143·81	99·30	99·30	58·15	58·15
7th ..	..	10·62	210·62	2·42	194·63	2·50	172·41	8·30	143·81	99·30	99·30	58·20	58·20
8th ..	..	10·58	210·58	2·42	194·63	2·50	172·41	8·30	143·81	99·20	99·20	58·20	58·20
9th ..	..	10·58	210·58	2·50	194·55	2·50	172·41	8·30	143·81	99·20	99·20	58·20	58·20
10th ..	..	10·54	210·54	2·50	194·55	2·42	172·33	8·30	143·81	99·10	99·10	58·20	58·20
11th ..	..	10·50	210·50	2·58	194·47	2·42	172·33	8·30	143·81	99·10	99·10	58·15	58·15
12th ..	..	10·50	210·50	2·58	194·47	2·33	172·24	8·30	143·81	99·10	99·10	58·15	58·15
13th ..	..	10·46	210·46	2·67	194·38	2·33	172·24	8·30	143·81	99·00	99·00	58·15	58·15
14th ..	..	10·42	210·42	2·67	194·38	2·33	172·24	8·20	143·71	99·00	99·00	58·15	58·15
15th ..	..	10·38	210·38	2·75	194·30	2·25	172·16	8·20	143·71	99·00	99·00	58·10	58·10
16th ..	..	10·38	210·38	2·75	194·30	2·17	172·08	8·20	143·71	99·00	99·00	58·10	58·10
17th ..	..	10·33	210·33	2·83	194·22	2·17	172·08	8·10	143·61	99·00	99·00	58·05	58·05
18th ..	..	10·25	210·25	2·83	194·22	2·08	171·99	8·10	143·61	99·00	99·00	58·00	58·00
19th ..	..	10·17	210·17	2·92	194·13	2·08	171·99	8·10	143·61	99·00	99·00	58·00	58·00
20th ..	..	10·17	210·17	2·92	194·13	2·08	171·99	8·10	143·61	99·00	99·00	58·00	58·00
21st ..	..	10·12	210·12	3·00	194·05	2·00	171·91	8·10	143·61	98·90	98·90	58·00	58·00
22nd ..	..	10·12	210·12	3·00	194·05	2·00	171·91	8·10	143·61	98·90	98·90	58·05	58·05
23rd ..	..	10·08	210·08	3·08	193·97	1·92	171·83	8·10	143·61	98·90	98·90	58·05	58·05
24th ..	..	10·04	210·04	3·08	193·97	1·92	171·83	8·10	143·61	98·90	98·90	58·05	58·05
25th ..	..	10·04	210·04	3·16	193·89	1·83	171·74	8·10	143·61	98·90	98·90	58·00	58·00
26th ..	..	10·00	210·00	3·16	193·89	1·83	171·74	8·10	143·61	98·90	98·90	58·10	58·10
27th ..	..	9·96	209·96	3·25	193·80	1·83	171·74	8·10	143·61	98·90	98·90	58·40	58·40
28th ..	..	9·92	209·92	3·25	193·80	1·75	171·66	8·10	143·61	98·90	98·90	58·50	58·50
[illegible] ..	..	9·87	209·87	3·25	193·80	1·75	171·66	8·10	143·61	98·90	98·90	58·55	58·55
30th ..	..	9·83	209·83	3·33	193·72	1·75	171·66	8·10	143·61	99·20	99·20	59·10	59·10
31st ..	..	9·79	209·79	3·33	193·72	1·67	171·58	8·10	143·61	99·30	99·30	59·20	59·20
Average level	..	10·32	210·32	2·76 (Below zero.)	194·29	2·20	172·11	8·21	143·72	99·13	99·13	58·24	58·24

Note.—Since the 1st January 1929 the datum of all gauges has been finally altered to refer to the Bengal Public Works Department datum which is 6·25 feet above recorded since each gauge was established have been prepared.

*The Zero of the Buxar gauge has been checked from the G. T. S. Bench marks Nos. 125 and 126 on line 70K and found to be 169·91 feet above the Bengal

†On and from 1st January 1931, High water level and Low water level readings are shown at Swarupganj.

The 5th January 1935.

BENGAL.

month of May 1934 and the highest reading of each gauge above P. W. D. datum as well as the lowest gauge reading since 1876.

Rampur-Boala. Zero of gauge is 31·86 ft. above P. W. D. datum.		Goalundo. Zero of gauge is 1·409 ft. above Bengal P. W. D. datum.		River Bhagirathi. Berhampore. Zero of guage is at P. W. D. datum.		River Jalangi. Swarupganj.† Zero of guage is at P. W. D. datum.				River Brahmaputra. Gauhati. Zero of gauge is 136·958 ft. above P. W. D. datum.	
From Benares, 471.	From Rajmahal, 64.	From Benares, 591.	From Rampur-Boalia, 120.								
6th August 1879. 62·24 ft.		16th August 1931. 29·60 ft.		14th August 1890. 63·46 ft.		25th September 1900. 35·30 ft.				24th August 1906. 109·25 ft.	
24th April 1931. 32·05 ft.		8th February 1914. 2·41 ft.		26th May 1884. 32·00 ft.		7th May 1896. 2·11 ft.				9th February 1888. 120·23 ft.	
Height above zero of gauge.	Height above P. W. D. datum.	Height above zero of gauge.	Height above P. W. D. datum.	Height above zero of gauge.	Height above P. W. D. datum.	Height above zero of guage.		Height above P. W. D. datum.		Height above zero of gauge.	Height above P. W. D. datum.
						H. W. L.	L. W. L.	H. W. L.	L. W. L.		
15	16	17	18	19	20	21	22	23	24	25	26
2·90	34·76	11·00	12·409	34·23	34·23	6·54	5·11	6·54	5·11	4·30	141·258
2·90	34·76	10·90	12·309	34·25	34·25	5·90	4·66	5·90	4·66	6·70	143·658
2·80	34·66	10·60	12·009	34·24	34·24	5·96	4·72	5·96	4·72	5·30	142·258
2·80	34·66	11·00	12·409	34·24	34·24	5·74	4·76	5·74	4·76	4·60	141·558
2·80	34·66	11·50	12·909	34·24	34·24	5·65	4·74	5·65	4·74	4·90	141·858
2·80	34·66	11·90	13·309	34·25	34·25	5·10	4·46	5·10	4·46	4·50	141·458
2·75	34·61	12·00	13·409	34·25	34·25	4·90	4·25	4·90	4·25	4·50	141·458
2·70	34·56	12·00	13·409	34·25	34·25	4·80	4·10	4·80	4·10	4·60	141·558
2·70	34·56	12·00	13·409	34·25	34·25	4·87	3·99	4·87	3·99	5·50	142·458
2·70	34·56	12·20	13·609	34·25	34·25	4·97	4·06	4·97	4·06	7·50	144·458
2·65	34·51	12·30	13·709	34·25	34·25	5·20	4·21	5·20	4·21	10·00	146·958
2·65	34·51	12·40	13·809	33·24	34·24	5·56	4·51	5·56	4·51	10·60	147·558
2·65	34·51	12·70	14·109	34·24	34·24	5·74	4·56	5·74	4·56	9·70	146·658
2·65	34·51	13·30	14·709	34·23	34·23	5·72	4·50	5·72	4·50	9·00	145·958
2·65	34·51	14·10	15·509	34·23	34·23	5·65	4·49	5·65	4·49	8·80	145·758
2·65	34·51	14·50	15·909	34·23	34·23	5·40	4·30	5·40	4·30	9·10	146·058
2·65	34·51	14·60	16·009	34·23	34·23	5·26	4·36	5·26	4·36	9·20	146·158
2·65	34·51	14·50	15·909	34·20	34·20	5·20	4·28	5·20	4·28	9·20	146·158
2·65	34·51	14·40	15·809	34·15	34·15	4·75	4·10	4·75	4·10	9·30	146·258
2·65	34·51	14·30	15·709	34·10	34·10	4·66	4·09	4·66	4·09	9·00	145·958
2·60	34·46	14·30	15·709	34·05	34·05	4·48	3·97	4·48	3·97	8·70	145·658
2·60	34·46	14·30	15·709	34·00	34·00	4·26	3·84	4·26	3·84	8·30	145·258
2·60	34·46	14·30	15·709	34·00	34·00	4·11	3·72	4·11	3·72	8·20	145·158
2·60	34·46	14·20	15·609	34·00	34·00	4·24	3·64	4·24	3·64	7·90	144·858
2·60	34·46	14·20	15·609	34·00	34·00	4·35	3·70	4·35	3·70	7·70	144·658
2·60	34·46	14·20	15·609	34·00	34·00	4·71	3·91	4·71	3·91	7·50	144·458
2·80	34·66	14·40	15·809	34·02	34·02	5·14	4·06	5·14	4·06	6·80	143·758
2·80	34·66	14·60	16·009	34·02	34·02	5·43	4·20	5·43	4·20	6·75	143·708
2·70	34·56	14·60	16·009	34·02	34·02	5·44	4·34	5·44	4·34	6·90	143·858
2·70	34·56	14·50	15·909	34·02	34·02	5·81	4·47	5·81	4·47	6·90	143·858
2·95	34·81	14·40	15·809	34·02	34·02	6·10	4·79	6·10	4·79	7·00	143·958
2·71	34·57	13·23	14·639	34·15	34·15	5·21	4·32	5·21	4·32	7·39	144·378

the Kidderpore Old Dock Sill. The values of the highest and lowest readings have similarly been altered. Printed notes on the correction to be applied to all reduced levels P. W. D. datum.

J. F. RUSSELL, *Personal Assistant to the Chief Engineer to the Government of Bengal, Irrigation Department.*

IRRIGATION DEPARTMENT,

Statement showing heights above P. W. D. datum and low water in the rivers Ganges, Bhagirathi, Jalangi and Brahmaputra for the month

Date.	River Ganges.													
	Mirzapur. Zero of gauge is 200·00 ft. above P. W. D. datum.		Benares.* Zero of gauge is 197·05 ft. above P. W. D. datum.		Buxar.* Zero of gauge is 169·91 ft. above Bengal P. W. D. datum.		Dinapore. Zero of gauge is 135·51 ft. above P. W. D. datum.		Monghyr. Zero of gauge is at P. W. D. datum.		Rajmahal. Zero of gauge is at P. W. D. datum.	
	Distance in miles.	From Allahabad, 86.	From Allahabad, 134.	From Mirzapur, 48.	From Benares, 90.		From Benares, 177.	From Buxar, 87.	From Benares, 287.	From Dinapore, 110.	From Benares, 407.	From Monghyr, 120.		
	Highest gauge reading.	2nd September 1916. 265·97 ft.	2nd September 1916. 244·55 ft.		7th September 1919. 203·40 ft.		21st August 1923. 172·41 ft.		8th September 1901. 129·60 ft.		15th August 1913. 90·37 ft.			
	Lowest gauge reading.	11th April 1878. 198·92 ft.	20th May 1879. 191·70 ft.		15th May 1914. 161·65 ft.		26th April 1902. 136·11 ft.		2nd May 1914. 95·75 ft.		12th May 1916. 55·40 ft.			
		Height above zero of gauge.	Height above P. W. D. datum.	Height above zero of gauge.	Height above P. W. D. datum.	Height above zero of gauge.	Height above P. W. D. datum.	Height above zero of gauge.	Height above P. W. D. datum.	Height above zero of gauge.	Height above P. W. D. datum.	Height above zero of gauge.	Height above P.W.D datum.	
1	2	3	4	5	6	7	8	9	10	11	12	13	14	
				(Below zero.)										
1st ..	..	9·71	209·71	3·42	193·63	1·67	171·58	8·00	143·51	99·50	99·50	59·30	59·30	
2nd ..	..	9·71	209·71	3·42	193·63	1·67	171·58	8·00	143·51	99·70	99·70	59·30	59·30	
3rd ..	..	9·71	209·71	3·42	193·63	1·58	171·49	8·00	143·51	99·90	99·90	59·50	59·50	
4th ..	..	9·67	209·67	3·50	193·55	1·58	171·49	8·00	143·51	100·10	100·10	59·55	59·55	
5th ..	..	9·62	209·62	3·50	193·55	1·58	171·49	8·00	143·51	100·30	100·30	59·60	59·60	
6th ..	..	9·58	209·58	3·58	193·47	1·58	171·49	8·00	143·51	100·30	100·30	59·90	59·90	
7th ..	..	9·58	209·58	3·58	193·47	1·50	171·41	8·00	143·51	100·40	100·40	60·10	60·10	
8th ..	..	9·54	209·54	3·58	193·47	1·50	171·41	8·00	143·51	100·50	100·50	60·00	60·00	
9th ..	..	9·50	209·50	3·58	193·47	1·50	171·41	8·00	143·51	100·70	100·70	60·00	60·00	
10th ..	..	9·50	209·50	3·58	193·47	1·50	171·41	8·00	143·51	100·90	100·90	59·80	59·80	
11th ..	..	9·50	209·50	3·67	193·39	1·50	171·41	8·00	143·51	100·90	100·90	59·80	59·80	
12th ..	..	9·50	209·50	3·67	193·39	1·42	171·33	8·00	143·51	100·60	100·60	60·00	60·00	
13th ..	..	9·50	209·50	3·67	193·39	1·42	171·33	8·00	143·51	100·50	100·50	60·50	60·50	
14th ..	..	9·50	209·50	3·67	193·39	1·42	171·33	8·00	143·51	100·50	100·50	61·10	61·10	
15th ..	..	9·50	209·50	3·58	193·47	1·33	171·24	8·00	143·51	100·80	100·80	61·30	61·30	
16th ..	..	9·50	209·50	3·58	193·47	1·33	171·24	8·00	143·51	101·50	101·50	61·30	61·30	
17th ..	..	9·50	209·50	3·58	193·47	1·33	171·24	8·50	144·01	101·70	101·70	61·50	61·50	
18th ..	..	9·50	209·50	3·58	193·47	1·33	171·24	8·90	144·41	102·50	102·50	62·40	62·40	
19th ..	..	9·67	209·67	3·58	193·47	1·33	171·24	10·00	145·51	103·50	103·50	63·10	63·10	
20th ..	..	9·50	209·50	3·58	193·47	1·42	171·33	10·10	145·61	104·60	104·60	63·90	63·90	
21st ..	..	9·58	209·58	3·58	193·47	1·42	171·33	10·70	146·21	105·20	105·20	64·80	64·80	
22nd ..	..	9·92	209·92	3·50	193·55	1·42	171·33	11·30	146·81	106·10	106·10	65·60	65·60	
23rd ..	..	9·50	209·50	3·33	193·72	1·58	171·49	11·70	147·21	106·40	106·40	66·20	66·20	
24th ..	..	11·33	211·33	2·67	194·38	1·83	171·74	11·70	147·21	106·50	106·50	66·70	66·70	
25th ..	..	13·50	213·50	1·83	195·22	1·92	171·83	11·80	147·31	106·50	106·50	66·80	66·80	
				Above zero.										
26th ..	..	16·00	216·00	0·33	197·38	2·17	172·08	11·90	147·41	106·70	106·70	66·80	66·80	
27th ..	..	16·17	216·17	1·92	198·97	3·25	173·16	13·00	148·51	107·10	107·10	66·90	66·90	
28th ..	..	16·08	216·08	2·00	199·05	4·17	174·08	14·50	150·01	108·30	108·30	67·20	67·20	
29th ..	..	16·33	216·33	2·25	199·30	5·17	175·08	14·30	149·81	109·10	109·10	68·00	68·00	
30th ..	..	18·00	218·00	3·50	200·50	5·83	175·74	14·70	150·21	109·30	109·30	68·90	68·90	
31st ..	..	..	..	..	..	..	..	..	..	..	..	..	..	
				Below zero										
Average level	..	10·92	210·92	2·54	194·51	1·94	171·85	8·51	145·22	103·02	103·02	62·66	62·66	

NOTE.—Since the 1st January 1929 the datum of all gauges has been finally altered to refer to the Bengal Public Works Department datum which is 6·25 feet above levels recorded since each gauge was established have been prepared.

*The zero of the Buxar gauge has been checked from the G. T. S. Bench marks Nos. 125 and 126 on line 70K and found to be 169·91 feet above the Bengal

†On and from 1st January 1931, High water level and Low water level readings are shown at Swarupganj.

(A) The value of zero of gauge at the station from 1st to 19th June 1934 was 31·86 P. W. D. datum and from 20th to 30th June 1934 it was 37·51 P. W. D.

The 5th January 1935.

ENGAL.

June 1934, and the highest reading of each gauge above P. W. D. datum as well as the lowest gauge reading since 1876.

(A) Rampur-Boalia. Zero of gauge is at P. W. D. datum.		Goalundo. Zero of gauge is 1·409 ft. above Bengal P. W. D. datum.		River Bhagirathi. Berhampore. Zero of gauge is at P. W. D. datum.		River Jalangi. Swarupganj.† Zero of gauge is at P. W. D. datum.				River Brahmaputra. Gauhati. Zero of gauge is 136·958 ft. above P. W. D. datum.	
From Benares, 471.	From Rajmahal, 64.	From Benares, 591.	From Rampur-Boalia, 120.								
6th August 1879. 62·24 ft.		16th August 1931. 29·60 ft.		14th August 1890. 63·46 ft.		25th September 1900. 35·30 ft.				24th August 1906. 169 25 ft.	
24th April 1931. 32·05 ft.		8th February 1914. 2·41 ft.		26th May 1884. 32·00 ft.		7th May 1896. 2·11 ft.				9th February 1888. 129·23 ft.	
Height above zero of gauge.	Height above P. W. D. datum.	Height above zero of gauge.	Height above P. W. D. datum.	Height above zero of gauge.	Height above P. W. D. datum.	Height above zero of gauge.		Height above P.W.D. datum.		Height above zero of gauge.	Height above P. W. D. datum.
						H. W. L.	L. W. L.	H. W. L.	L. W. L.		
15	16	17	18	19	20	21	22	23	24	25	26
3·25	35·11	14·40	15·809	34·05	34·05	6·09	4·89	6·09	4·89	7·00	143·958
3·40	35·26	14·40	15·809	34·25	34·25	5·82	4·81	5·82	4·81	6·90	143·858
3·60	35·46	14·50	15·909	34·25	34·25	5·70	4·76	5·70	4·76	7·00	143·958
3·70	35·56	14·60	16·009	34·25	34·25	5·48	4·47	5·48	4·47	8·10	145·058
3·70	35·56	14·40	15·809	34·24	34·24	4·56	4·02	4·56	4·02	9·40	146·358
3·80	35·66	14·40	15·809	34·15	34·15	4·27	3·76	4·27	3·76	10·70	147·258
4·00	35·86	14·50	15·909	34·15	34·15	4·12	3·63	4·12	3·63	12·80	149·758
4·25	36·11	14·80	16·209	34·15	34·15	3·78	3·59	3·78	3·59	13·10	150·058
4·30	36·16	15·20	16·609	34·10	34·10	4·06	3·57	4·06	3·57	12·70	149·658
4·20	36·06	15·70	17·109	34·05	34·05	4·12	3·60	4·12	3·60	11·50	148·458
4·20	36·06	16·20	17·609	34·05	34·05	4·34	3·70	4·34	3·70	11·00	147·958
4·15	36·01	16·60	18·009	34·05	34·05	4·46	3·79	4·46	3·79	10·70	147·658
4·25	36·11	16·90	18·309	34·05	34·05	4·78	4·00	4·78	4·00	10·30	147·258
4·55	36·41	17·40	18·809	34·05	34·05	5·09	4·32	5·09	4·32	10·60	147·588
5·25	37·11	17·60	19·009	34·05	34·05	5·46	4·61	5·46	4·61	10·60	147·558
5·80	37·66	17·30	18·709	34·05	34·05	5·57	4·73	5·57	4·73	15·20	152·158
6·00	37·86	17·10	18·509	34·10	34·10	5·47	4·65	5·47	4·65	18·60	155·558
6·15	38·01	17·70	19·109	34·15	34·15	5·36	4·67	5·36	4·67	19·00	155·958
6·90	38·76	18·80	20·209	34·20	34·20	5·27	4·64	5·27	4·64	19·50	156·458
1·95	39·46	19·70	21·109	34·22	34·22	5·22	4·60	5·22	4·60	19·50	156·458
2·80	40·31	20·40	21·809	34·25	34·25	7·60	5·77	7·60	5·77	20·70	157·658
3·80	41·31	21·10	22·509	34·27	34·27	8·18	7·90	8·18	7·90	21·90	158·858
4·60	42·11	21·60	23·009	34·30	34·30	7·55	6·98	7·55	6·98	23·80	160·758
5·50	43·01	22·00	23·409	34·50	34·50	8·36	7·61	8·36	7·61	25·30	162·258
5·80	43·31	22·70	24·109	35·80	35·80	8·90	8·54	8·90	8·54	25·60	162·558
5·90	43·41	22·80	24·209	36·50	36·50	8·68	8·08	8·68	8·08	24·60	161·558
6·10	43·61	23·10	24·509	36·80	36·80	8·87	8·19	8·87	8·19	23·20	160·158
6·10	43·61	23·50	24·909	37·20	37·20	9·67	8·62	9·07	8·62	22·60	159·558
6·35	43·86	23·60	25·009	37·20	37·20	10·12	8·75	10·12	8·75	21·90	158·858
7·05	44·56	23·60	25·009	37·10	37·10	9·94	8·48	9·94	8·48	21·60	158·858
..	..	..	..	..	..	..	..	..	..	..	..
Vide foot-note below.		18·22	19·629	34·68	34·68	6·23	5·46	6·23	5·46	15·85	152·808

the Kidderpore Old Dock Sill. The values of the highest and lowest readings have similarly been altered. Printed notes on the correction to be applied to all reduced P. W. D. datum.

datum. Hence the average level at the station is twice shown thus :– from 1st to 19th June 1934—4·50 and from 20th to 30th June 1934—5·09.

J. F. RUSSELL, *Personal Assistant to the Chief Engineer to the Government of Bengal, Irrigation Department.*

IRRIGATION DEPARTMENT,

Statement showing heights above P. W. D. datum and low water in the rivers Ganges, Bhagirathi, Jalangi and Brahmaputra for the

Date.	River Ganges.													
	Mirzapur. Zero of gauge is 200·00 ft. above P. W. D. datum.		Benares. Zero of gauge is 197·05 ft. above P. W. D. datum.		Buxar.* Zero of gauge is 169·91 ft. above Bengal P. W. D. datum.		Dinapore. Zero of gauge is 135·51 ft. above P. W. D. datum.		Monghyr. Zero of gauge is at P. W. D. datum.		Rajmahal. Zero of gauge is at P. W. D. datum.	
	Distance in miles.	From Allahabad, 86.	From Allahabad, 134.	From Mirzapur, 48.	From Benares. 90.		From Benares, 177.	From Buxar, 87.	From Benares, 287.	From Dinapore, 110.	From Benares, 407.	From Monghyr, 120.		
	Highest gauge reading.	2nd September 1916. 265·97 ft.	2nd September 1916. 244·55 ft.		7th September 1919. 203·40 ft.		21st August 1923. 172·41 ft.		8th September 1901. 129·60 ft.		15th August 1913. 90·37 ft.			
	Lowest gauge reading.	11th April 1878. 198·92 ft.	20th May 1879. 191·70 ft.		15th May 1914. 161·65 ft.		26th April 1902. 136·11 ft.		2nd May 1914. 95·75 ft.		12th May 1916. 55·46 ft.			
		Height above zero of gauge.	Height above P. W. D. datum.	Height above zero of gauge.	Height above P. W. D. datum.	Height above zero of gauge.	Height above P. W.D. datum.	Height above zero of gauge.	Height above P. W.D. datum.	Height above zero of gauge.	Height above P.W.D. datum.	Height above zero of gauge.	Height above P. W. D. datum.	
1	2	3	4	5	6	7	8	9	10	11	12	13	14	
1st	..	..	21·00	221·00	5·83	202·88	6·42	176·33	14·80	150·31	109·60	109·60	69·50	69·50
2nd	..	..	22·75	222·75	8·00	205·05	8·00	177·91	14·80	150·31	109·70	109·70	69·90	69·90
3rd	..	..	25·33	225·33	10·50	207·55	9·50	179·41	17·00	152·51	110·20	110·20	70·20	70·20
4th	..	..	26·00	226·00	11·08	209·13	11·50	181·41	19·00	154·51	111·80	111·80	70·50	70·50
5th	..	..	25·58	225·58	11·50	208·55	12·50	182·41	19·10	154·61	113·00	113·00	71·60	71·60
6th	..	..	25·42	225·42	12·00	209·05	13·00	182·91	19·80	155·31	113·70	113·70	72·80	72·80
7th	..	..	25·50	225·50	11·75	208·80	13·00	182·91	19·80	155·31	114·30	114·30	73·50	73·50
8th	..	..	26·92	226·92	12·50	209·55	13·00	182·91	19·70	155·21	114·50	114·50	74·00	74·00
9th	..	..	29·25	229·25	15·75	212·80	13·58	183·49	19·60	155·11	114·50	114·50	74·30	74·30
10th	..	..	30·50	230·50	17·50	214·55	16·58	186·49	20·00	155·51	114·90	114·90	74·60	74·60
11th	..	..	33·75	233·75	20·33	217·38	16·58	186·49	22·70	158·21	115·70	115·70	74·90	74·90
12th	..	..	37·00	237·00	25·00	222·05	22·00	191·91	24·20	159·71	118·10	118·10	75·80	75·80
13th	..	..	38·00	238·00	26·50	223·55	23·92	193·83	27·00	162·51	120·50	120·50	78·40	78·40
14th	..	..	39·00	239·00	27·42	224·47	24·67	194·58	28·10	163·61	122·10	122·10	80·50	80·50
15th	..	..	37·42	237·42	26·00	223·05	24·83	194·74	27·70	163·21	122·80	122·80	81·50	81·50
16th	..	..	35·00	235·00	24·00	221·05	23·50	193·41	26·60	162·11	122·50	122·50	81·90	81·90
17th	..	..	33·00	233·00	21·50	218·55	22·00	191·91	25·60	161·11	121·90	121·90	82·00	82·00
18th	..	..	31·08	231·08	19·50	216·55	20·50	190·41	24·60	160·11	120·90	120·90	81·60	81·60
19th	..	..	30·00	230·00	18·00	215·05	19·33	189·24	24·40	159·91	120·40	120·40	81·00	81·00
20th	..	..	29·00	229·00	16·50	213·55	18·50	188·41	24·40	159·91	120·30	120·30	80·70	80·70
21st	..	..	28·00	228·00	15·50	212·55	17·50	187·41	23·90	159·41	120·00	120·00	80·50	80·50
22nd	..	..	27·83	227·83	15·00	212·05	16·67	186·58	23·60	159·11	119·40	119·40	80·20	80·20
23rd	..	..	27·17	227·17	15·25	212·30	16·50	186·41	23·50	159·01	118·90	118·90	80·00	80·00
24th	..	..	29·00	229·00	16·00	213·05	16·83	186·74	23·50	159·01	118·60	118·60	79·60	79·60
25th	..	..	29·25	229·25	16·50	213·55	17·92	187·83	24·70	160·21	119·00	119·00	79·60	79·60
26th	..	..	29·83	229·83	17·00	214·05	18·67	188·58	25·60	161·11	120·20	120·20	80·00	80·00
27th	..	..	29·33	229·33	17·00	214·05	19·00	188·91	26·70	162·21	121·10	121·10	80·60	80·60
28th	..	..	30·33	230·33	17·17	214·22	18·92	188·83	26·70	162·21	121·90	121·90	81·30	81·30
29th	..	..	32·00	232·00	19·50	216·55	19·33	189·24	26·60	162·11	122·10	122·10	81·80	81·80
30th	..	..	32·50	232·50	20·00	217·05	21·25	191·16	27·10	162·61	122·20	122·20	82·10	82·10
31st	..	..	33·33	233·33	21·50	218·55	22·17	192·08	27·80	163·31	122·70	122·70	82·50	82·50
Average level		..	30·00	230·00	17·15	214·20	17·34	187·25	23·18	158·69	117·98	117·98	77·66	77·66

NOTE.—Since the 1st January 1929 the datum of all gauges has been finally altered to refer to the Bengal Public Works Department datum which is 6·25 feet above levels recorded since each gauge was established have been prepared.

*The zero of the Buxar gauge has been checked from the G. T. S. Bench marks Nos. 125 and 126 on line 70K and found to be 169·91 feet above the Bengal

†On and from 1st January 1931, High water level and Low water level readings are shown at Swarupganj.

(A) The value of zero of gauge at the station was 37·51 P. W. D. datum from 1st to 3rd July 1934, 45·26 P. W. D. datum from 4th to 14th July 1934, and 0·00 July 1934 :—4·51, and from 15th to 31st July 1934 :—56·23.

The 5th January 1935.

:NGAL.

nth of July 1934 and the highest reading of each gauge above P. W. D. datum as well as the lowest gauge reading since 1876.

				River Bhagirathi.		River Jalangi.				River Brahmaputra.	
(A) Rampur-Boalia. Zero of gauge is t P. W. D. datum.		Goalundo. Zero of gauge is 1·409 ft. above Bengal P.W.D. datum.		Berhampore. Zero of gauze is at P.W.D. datum.		Swarupganj.† Zero of gauge is at P. W. D. datum.				Gauhati. Zero of gauge is 136·958 ft. above P. W. D. datum.	
From enares, 471.	From Rajmahal, 64.	From Benares, 591.	From Rampur-Boalia, 120.								
6th August 1879. 62·24 ft.		16th August 1931. 29·60 ft.		14th August 1890. 63·46 ft.		25th September 1900. 35·30 ft.				24th August 1906. 169·25 ft.	
24th April 1931. 32·05 ft.		8th February 1914. 2·41 ft.		26th May 1884. 32·00 ft.		7th May 1896. 2·11 ft.				9th February 1888. 129·23 ft.	
Height above zero of gauge.	Height above P.W.D. datum.	Height above zero of gauge.	Height above P.W.D. datum.	Height above zero of gauge.	Height above P.W.D. datum.	Height above zero of gauge.		Height above P. W. D. datum.		Height above zero of gauge.	Height above P. W. D. datum.
						H. W. L.	L. W. L.	H. W. L.	L. W. L.		
15	16	17	18	19	20	21	22	23	24	25	26
7·80	45·31	23·60	25·009	37·30	37·30	9·32	8·21	9·32	8·21	21·20	158·158
8·40	45·91	23·60	25·009	37·95	37·95	9·20	8·11	9·20	8·11	21·50	158·458
8·65	46·16	23·50	24·909	39·00	39·00	9·00	8·20	9·00	8·20	21·80	158·758
1·20	46·46	23·50	24·909	39·50	39·50	8·98	8·45	8·98	8·45	22·00	158·958
1·60	46·86	23·30	24·709	40·00	40·00	9·01	8·66	9·01	8·66	21·80	158·758
2·60	47·86	23·00	24·409	41·10	41·10	9·20	8·87	9·20	8·87	21·20	158·158
3·40	48·66	23·10	24·509	42·10	42·10	9·71	9·24	9·71	9·24	20·70	157·658
4·20	49·46	23·20	24·609	43·50	43·50	11·32	10·42	11·32	10·42	20·30	157·258
4·60	49·86	23·20	24·609	44·40	44·40	12·29	11·79	12·29	11·79	20·00	156·958
4·90	50·16	23·20	24·609	45·00	45·00	12·76	12·49	12·76	12·49	19·70	156·658
5·20	50·46	23·20	24·609	45·35	45·35	14·10	13·04	14·10	13·04	19·60	156·558
5·60	50·86	23·20	24·609	45·60	45·60	15·56	15·12	15·56	15·12	20·10	157·058
7·20	52·46	23·40	24·809	46·95	46·95	17·74	16·46	17·74	16·46	20·60	157·558
9·10	54·35	23·60	25·009	50·00	50·00	19·91	18·94	19·91	18·94	21·10	158·058
55·75	55·75	24·10	25·509	52·10	52·10	21·10	20·53	21·10	20·53	22·00	158·958
56·50	56·50	24·60	26·009	53·05	53·05	21·85	21·46	21·85	21·46	22·50	159·458
56·80	56·80	24·90	26·309	53·50	53·50	22·42	22·20	22·42	22·20	22·80	159·758
56·80	56·80	25·20	26·609	53·60	53·60	22·76	22·62	22·76	22·62	22·80	159·758
56·55	56·55	25·30	26·709	53·40	53·40	22·82	22·80	22·82	22·80	22·50	159·458
56·20	56·20	25·30	26·709	53·00	53·00	22·79	22·73	22·79	22·73	22·30	159·258
56·05	56·05	25·20	26·609	52·60	52·60	22·58	22·50	22·58	22·50	22·00	158·958
55·90	55·90	25·10	26·509	52·35	52·35	22·58	22·51	22·58	22·51	21·60	158·558
55·70	55·70	25·00	26·409	52·00	52·00	22·56	22·49	22·56	22·49	21·10	158·058
55·40	55·40	24·90	26·309	51·60	51·60	22·31	22·10	22·31	22·10	21·00	157·958
55·20	55·20	24·90	26·309	51·30	51·30	22·00	21·81	22·00	21·81	21·00	157·958
55·20	55·20	24·90	26·309	51·05	51·05	21·74	21·54	21·74	21·54	21·30	158·258
55·60	55·60	24·90	26·309	51·15	51·15	21·54	21·36	21·54	21·36	21·90	158·858
56·30	56·30	25·10	26·509	51·85	51·85	21·56	21·44	21·56	21·44	22·50	159·458
57·00	57·00	25·50	26·909	52·65	52·65	21·92	21·56	21·92	21·56	23·20	160·158
57·40	57·40	25·70	27·109	53·20	53·20	22·53	22·23	22·53	22·23	23·90	160·858
57·65	57·65	25·90	27·309	53·62	53·62	23·10	22·81	23·10	22·81	23·90	160·858
Vide foot note below.		24·29	25·699	48·06	48·06	17·62	17·18	17·62	17·18	21·61	158·568

the Kidderpore Old Dock Sill. The values of the highest and lowest readings have similarly been altered. Printed notes on the correction to be applied to all reduced P. W. D. datum.

P. W. D. datum from 15th to 31st July 1934. Hence the average level at the station is thus shown thus:—from 1st to 3rd July 1934:—8·28, from 4th to 14th

J. F. RUSSELL, *Personal Assistant to the Chief Engineer to the Government of Bengal, Irrigation Department.*

IRRIGATION DEPARTMENT

Statement showing heights above P. W. D. datum and low water in the rivers Ganges, Bhagirathi, Jalangi and Brahmaputra for the

Date.	River Ganges.											
	Mirzapur. Zero of gauge is 200·00 ft. above P. W. D. datum.		Benares. Zero of gauge is 197·05 ft. above P. W. D. datum.		†Buxar.* Zero of gauge is 169·91 ft. above Bengal P. W. D. datum.		Dinapore. Zero of gauge is 135·51 ft. above P. W. D. datum.		Monghyr. Zero of gauge is at P. W. D. datum.		Rajmahal. Zero of gauge is at P. W. D. datum.	
	Distance in miles.	From Allahabad, 86.	From Allahabad, 134.	From Mirzapur, 48.	From Benares, 90.		From Benares, 177.	From Buxar, 87.	From Benares, 287.	From Dinapore, 110.	From Benares, 407.	From Monghyr, 120.
	Highest guage reading.	2nd September 1916. 265·97 ft.	2nd September 1916. 244·55 ft.		7th September 1919. 203·40 ft.		21st August 1923. 172·41 ft.		8th September 1901. 129·60 ft.		15th August 1913. 90·37 ft.	
	Lowest gauge reading.	11th April 1878. 198·92 ft.	20th May 1879. 191·70 ft.		15th May 1914. 161·65 ft.		26th April 1902. 136·11 ft.		2nd May 1914. 95·75 ft.		12th May 1916. 55·46 ft.	
		Height above zero of gauge.	Height above P. W. D. datum.	Height above zero of gauge.	Height above P. W. D. datum.	Height above zero of gauge.	Height above P. W. D. datum.	Height above zero of gauge.	Height above P. W. D. datum.	Height above zero of gauge.	Height above P. W. D. datum.	Height above zero of gauge.	Height above P. W. D. datum.
1	2	3	4	5	6	7	8	9	10	11	12	13	14
1st ..	..	33·50	233·50	21·67	218·72	22·42	192·33	28·10	163·61	123·20	123·20	83·00	83·00
2nd ..	..	33·50	233·50	21·75	218·80	22·42	192·33	28·10	163·61	123·20	123·20	83·20	83·20
3rd ..	..	32·83	232·83	21·17	218·22	22·33	192·24	28·10	163·61	123·70	123·70	83·60	83·60
4th ..	..	32·33	232·33	20·42	217·47	21·58	191·49	27·80	163·31	123·70	123·70	83·60	83·60
5th ..	..	31·17	231·17	19·50	216·55	21·00	190·91	27·50	163·01	123·50	123·50	83·80	83·80
6th ..	..	31·25	231·25	19·83	216·88	20·42	190·33	27·30	162·81	123·20	123·20	83·80	83·80
7th ..	..	33·50	233·50	21·00	218·05	20·42	190·33	26·80	162·31	122·80	122·80	83·75	83·75
8th ..	..	34·50	234·50	23·00	220·05	21·58	191·49	27·00	162·51	122·60	122·60	83·65	83·65
9th ..	..	36·42	236·42	24·00	221·05	23·00	192·91	28·20	163·71	123·00	123·00	83·60	83·60
10th ..	..	39·25	239·25	27·50	224·55	24·50	194·41	28·30	163·81	123·50	123·50	83·55	83·55
11th ..	..	40·50	240·50	29·00	226·05	26·00	195·91	28·90	164·41	123·90	123·90	83·70	83·70
12th ..	..	40·50	240·50	29·50	226·55	26·25	196·16	29·20	164·71	124·30	124·30	84·00	84·00
13th ..	..	44·08	244·08	32·00	229·05	26·58	196·49	29·20	164·71	124·50	124·50	84·30	84·30
14th ..	..	46·75	246·75	35·00	232·05	27·42	197·33	29·50	165·01	124·70	124·70	84·50	84·50
15th ..	..	47·08	247·08	35·50	232·55	28·00	197·91	30·00	165·51	125·00	125·00	84·60	84·60
16th ..	..	46·08	246·08	34·58	231·63	28·00	197·91	30·10	165·61	125·30	125·30	84·80	84·80
17th ..	..	43·83	243·83	33·00	230·05	27·42	197·33	29·80	165·31	125·50	125·50	84·90	84·90
18th ..	..	41·50	241·50	30·00	227·05	26·50	196·41	29·30	164·81	125·50	125·50	84·90	84·90
19th ..	..	40·50	240·50	29·00	226·05	25·25	195·16	28·70	164·21	125·00	125·00	84·90	84·90
20th ..	..	42·25	242·25	29·50	226·55	25·08	194·99	27·90	163·41	124·60	124·60	84·80	84·80
21st ..	..	45·50	245·50	33·00	230·05	26·33	196·24	28·60	164·11	124·10	124·10	84·50	84·50
22nd ..	..	48·75	248·75	36·50	233·55	27·75	197·66	29·70	165·21	124·40	124·40	84·10	84·10
23rd ..	..	50·83	250·83	39·00	236·05	29·00	198·91	30·70	166·21	125·30	125·30	84·10	84·10
24th ..	..	51·33	251·33	39·50	236·55	29·42	199·33	34·00	169·51	126·20	126·20	84·40	84·40
25th ..	..	51·75	251·75	39·33	236·38	29·92	199·83	36·40	171·91	127·70	127·70	85·00	85·00
26th ..	..	52·50	252·50	40·00	237·05	30·08	199·99	34·20	169·71	128·50	128·50	85·80	85·80
27th ..	..	54·50	254·50	42·00	239·05	30·50	200·41	32·90	168·41	128·70	128·70	86·60	86·60
28th ..	..	56·17	256·17	43·67	240·72	31·00	200·91	32·30	167·81	128·70	128·70	87·10	87·10
29th ..	..	57·67	257·67	44·50	241·55	31·33	201·24	32·10	167·61	128·50	128·50	87·35	87·35
30th ..	..	57·00	257·00	44·25	241·30	31·67	201·58	32·00	167·51	128·30	128·30	87·50	87·50
31st ..	..	53·83	253·83	42·33	239·38	31·83	201·74	32·00	167·51	128·30	128·30	87·50	87·50
Average level	..	43·59	243·59	31·65	228·70	26·29	196·20	29·83	165·34	125·14	125·14	84·67	84·67

Note.—Since the 1st January 1929 the datum of all ganges has been finally altered to refer to the Bengal Public Works Department datum which is 6·25 feet above levels recorded since each gauge was established have been prepared.

*The zero of the Buxar gauge has been checked from the G. T. S. Bench marks Nos. 125 and 126 on line 70K and found to be 169·91 feet above the Bengal P. W. D.

†On and from 1st January 1931, high water level and low water level readings are shown at Swarupganj.

The 12th January 1935.

ENGAL

ionth of August 1934 and the highest reading of each gauge above P. W. D. datum as well as the lowest gauge reading since 1876.

				River Bhagirathi.		River Jalangi.				River Brahmaputra.	
Rampur-Boalia. Zero of gauge is at P. W. D. datum.		Goalundo. Zero of gauge is 1·409 ft. above Bengal P. W. D. datum.		Berhampore. Zero of guage is at P. W. D. datum.		Swarupganj.† Zero of guage is at P. W. D. datum.				Gauhati. Zero of gauge is 136·958 ft. above P. W. D. datum.	
From Benares, 471.	From Rajmahal, 64.	From Benares, 591.	From Rampur-Boalia, 120.								
6th August 1879. 62·24 ft.		16th August 1931. 29·60 ft.		14th August 1890. 63·46 ft.		25th September 1900. 35·30 ft.				24th August 1906. 169·25 ft.	
24th April 1931. 32·05 ft.		8th February 1914. 2·41 ft.		26th May 1884. 32·00 ft.		7th May 1896. 2·11 ft.				9th February 1888. 129 23 ft.	
Height above zero of gauge.	Height above P. W. D. datum.	Height above zero of gauge.	Height above P. W. D. datum.	Height above zero of gauge.	Height above P. W. D. datum.	Height above zero of guage.		Height above P. W. D. datum.		Height above zero of gauge.	Height above P. W. D. datum.
						H. W. L.	L. W. L.	H. W. L.	L. W. L.		
15	16	17	18	19	20	21	22	23	24	25	26
58·00	58·00	26·00	27·409	54·07	54·07	23·70	23·45	23·70	23·45	23·70	160·658
58·40	58·40	26·10	27·509	54·50	54·50	24·04	23·90	24·04	23·90	23·30	160·258
58·75	58·75	26·20	27·609	54·88	54·88	24·26	24·14	24·26	24·14	22·90	159·858
58·95	58·95	26·20	27·609	55·35	55·35	24·48	24·34	24·48	24·34	22·80	159·758
59·20	59·20	26·20	27·609	55·35	55·35	24·60	24·55	24·60	24·55	22·90	159·858
59·35	59·35	26·20	27·609	55·48	55·48	24·70	24·66	24·70	24·66	23·00	159·958
59·40	59·40	26·20	27·609	55·60	55·60	24·86	24·76	24·86	24·76	23·40	160·358
59·40	59·40	26·20	27·609	55·70	55·70	25·04	24·98	25·04	24·98	23·70	160·658
59·30	59·30	26·30	27·709	55·72	55·72	25·13	25·09	25·13	25·09	24·10	161·058
59·25	59·25	26·50	27·909	55·68	55·68	25·34	25·19	25·34	25·19	24·40	161·358
59·30	59·30	26·60	28·009	55·80	55·80	25·80	25·60	25·80	25·60	24·70	161·658
59·65	59·65	26·70	28·109	56·00	56·00	26·06	25·96	26·06	25·96	24·90	161·858
59·70	59·70	26·70	28·109	56·10	56·10	26·20	26·14	26·20	26·14	25·00	161·958
59·90	59·90	26·70	28·109	56·20	56·20	26·25	26·21	26·25	26·21	24·60	161·558
60·05	60·05	26·70	28·109	56·30	56·30	26·34	26·26	26·34	26·26	24·30	161·258
60·20	60·20	26·70	28·109	56·40	56·40	26·36	26·34	26·36	26·34	23·90	160·858
60·35	60·35	26·80	28·209	56·45	56·45	26·33	26·30	26·33	26·30	23·50	160·458
60·50	60·50	26·80	28·209	56·38	56·38	26·30	26·28	26·30	26·28	22·90	159·858
60·60	60·60	26·80	28·209	56·58	56·58	26·29	26·22	26·29	26·22	22·60	159·558
60·60	60·60	26·70	28·109	56·75	56·75	26·37	26·31	26·37	26·31	21·90	158·858
60·60	60·60	26·70	28·109	56·77	56·77	26·61	26·47	26·61	26·47	21·50	158·458
60·40	60·40	26·80	28·209	56·72	56·72	27·04	26·80	27·04	26·80	21·20	158·158
60·20	60·20	26·70	28·109	56·72	56·72	27·30	27·20	27·30	27·20	20·40	157·358
60·30	60·30	26·40	27·809	56·65	56·65	27·47	27·41	27·47	27·41	19·70	156·658
60·50	60·50	26·30	27·709	56·72	56·72	27·59	27·52	27·59	27·52	19·10	156·058
61·00	61·00	26·20	27·609	56·95	56·95	27·58	27·57	27·58	27·57	18·80	155·758
61·50	61·50	26·20	27·609	57·25	57·25	27·56	27·52	27·56	27·52	19·40	156·358
61·95	61·95	26·10	27·509	57·75	57·75	27·78	27·61	27·78	27·61	19·30	156·258
62·25	62·25	26·10	27·509	58·15	58·15	28·00	27·94	28·00	27·94	19·00	155·958
62·50	62·50	26·00	27·409	58·45	58·45	28·10	28·08	28·10	28·08	18·70	155·658
62·60	62·60	25·90	27·309	58·55	58·55	28·20	28·15	28·20	28·15	18·20	155·158
60·15	60·15	26·41	27·819	56·32	56·32	26·18	26·10	26·18	26·10	22·19	159·148

the Kidderpore Old Dock Sill. The values of the highest and lowest readings have similarly been altered. Printed notes on the correction to be applied to all reduced datum.

J. F. RUSSELL, *Personal Assistant to the Chief Engineer to the Government of Bengal, Irrigation Department.*

IRRIGATION DEPARTMENT,

Statement showing heights above P. W. D. datum and low water in the rivers Ganges, Bhagirathi, Jalangi and Brahmaputra for the

Date.	River Ganges.												
	Mirzapur. Zero of gauge is 200·00 ft. above P. W. D. datum.		Benares. Zero of gauge is 197·05 ft. above P. W. D. datum.		Buxar.* Zero of gauge is 169·91 ft. above Bengal P. W. D. datum.		Dinapore. Zero of gauge is 135·51 ft. above P. W. D. datum.		Monghyr. Zero of gauge is at P. W. D. datum.		Rajmahal. Zero of gauge is at P. W. D. datum.	
	Distance in miles.	From Allahabad, 86.	From Allahabad, 134.	From Mirzapur, 48.	From Benares, 90.		From Benares, 177.	From Buxar, 87.	From Benares, 287.	From Dinapore, 110.	From Benares, 407.	From Monghyr, 120.
	Highest guage reading.	2nd September 1916. 265·97 ft.	2nd September 1916. 244·55 ft.		7th September 1919. 203·40 ft.		21st August 1923. 172·41 ft.		8th September 1901. 129·60 ft.		15th August 1913. 90·37 ft.	
	Lowest gauge reading.	11th April 1878. 198·92 ft.	20th May 1879. 191·70 ft.		15th May 1914. 161·65 ft.		26th April 1902. 136·11 ft.		2nd May 1914. 95·75 ft.		12th May 1916. 55·46 ft.	
		Height above zero of gauge.	Height above P. W. D. datum.	Height above zero of gauge.	Height above P. W. D. datum.	Height above zero of gauge.	Height above P. W. D. datum.	Height above zero of gauge.	Height above P. W. D. datum.	Height above zero of gauge.	Height above P. W. D. datum.	Height above zero of gauge.	Height above P. W. D. datum.
1	2	3	4	5	6	7	8	9	10	11	12	13	14
1st	..	50·00	250·00	39·50	236·55	31·50	201·41	31·80	167·31	128·20	128·20	87·60	87·60
2nd	..	46·17	246·17	35·00	232·05	30·00	199·91	31·40	166·91	128·10	128·10	87·65	87·65
3rd	..	44·33	244·33	32·00	229·05	28·17	198·08	30·60	166·11	127·90	127·90	87·60	87·60
4th	..	44·33	244·33	31·83	228·88	27·00	196·91	29·30	164·81	127·40	127·40	87·40	87·40
5th	..	45·25	245·25	32·50	229·55	26·83	196·74	28·30	163·81	126·70	126·70	87·20	87·20
6th	..	46·50	246·50	34·00	231·05	27·50	197·41	28·00	163·51	126·00	126·00	86·70	86·70
7th	..	46·92	246·92	34·50	231·55	28·00	197·91	28·10	163·61	125·50	125·50	86·10	86·10
8th	..	46·00	246·00	34·00	231·05	28·00	197·91	28·00	163·51	125·10	125·10	85·60	85·60
9th	..	44·50	244·50	32·50	229·55	27·17	197·08	27·90	163·41	124·90	124·90	85·00	85·00
10th	..	44·17	244·17	31·00	228·05	26·67	196·58	27·30	162·81	124·50	124·50	84·60	84·60
11th	..	46·25	246·25	33·50	230·55	26·83	196·74	27·30	162·81	124·00	124·00	84·20	84·20
12th	..	48·75	248·75	36·00	233·05	28·00	197·91	28·00	163·51	123·80	123·80	83·70	83·70
13th	..	50·50	250·50	37·50	234·55	29·00	198·91	29·20	164·71	124·40	124·40	83·50	83·50
14th	..	51·00	251·00	38·50	235·55	29·50	199·41	29·50	165·01	124·80	124·80	83·70	83·70
15th	..	50·92	250·92	38·50	235·05	29·67	199·58	29·80	165·31	125·50	125·50	84·00	84·00
16th	..	50·25	250·25	38·00	233·72	29·67	199·58	29·60	165·11	125·70	125·70	84·40	84·40
17th	..	49·00	249·00	36·67	232·38	29·25	199·16	29·40	164·91	125·90	125·90	84·80	84·80
18th	..	47·42	247·42	35·33	230·05	28·67	198·58	29·40	164·91	125·90	125·90	85·05	85·05
19th	..	45·33	245·33	33·00	227·05	28·00	197·91	29·20	164·71	125·70	125·70	85·20	85·20
20th	..	42·25	242·25	30·00	224·55	26·42	196·33	29·10	164·61	125·50	125·50	85·20	85·20
21st	..	39·00	239·00	27·50	222·05	24·92	194·83	27·70	163·21	125·20	125·20	85·00	85·00
22nd	..	37·67	237·67	25·00	221·05	24·00	193·91	26·30	161·81	124·20	124·20	84·80	84·80
23rd	..	36·08	236·08	23·00	219·55	23·08	192·99	26·10	161·61	122·70	122·70	84·00	84·00
24th	..	35·83	235·83	22·50	223·55	22·25	192·16	25·30	160·81	122·20	122·20	83·00	83·00
25th	..	41·17	241·17	26·50	229·05	22·50	192·41	25·70	161·21	121·60	121·60	82·20	82·20
26th	..	45·33	245·33	32·00	231·05	25·50	195·41	25·10	160·61	121·40	121·40	81·60	81·60
27th	..	45·75	245·75	34·00	231·05	27·42	197·33	27·00	162·51	121·70	121·70	81·10	81·10
28th	..	46·67	246·67	34·00	231·05	28·17	198·08	28·00	163·51	122·70	122·70	81·30	81·30
29th	..	45·50	245·50	33·00	230·05	27·75	197·66	28·30	163·81	123·30	123·30	81·90	81·90
30th	..	44·17	244·17	31·33	228·38	27·33	197·24	28·00	163·51	123·40	123·40	82·30	82·30
31st	..												
Average level	..	45·23	245·23	32·76	229·81	27·29	197·20	28·20	163·80	124·80	124·80	84·55	84·55

Note.—Since the 1st January 1929 the datum of all gauges has been finally altered to refer to the Bengal Public Works Department datum which is 6·25 feet above recorded since each gauge was established have been prepared.

*The zero of the Buxar gauge has been checked from the G. T. S. Bench marks Nos. 125 and 126 on line 70K and found to be 169·91 feet above the Bengal P. W. D

†On and from 1st January 1931, high water level and low water level readings are shown at Swarupganj.

The 12th January 1935.

ENGAL.

onth of September 1934 and the highest reading of each gauge above P. W. D. datum as well as the lowest gauge reading since 1876.

				River Bhagirathi.		River Jalangi.				River Brahmaputra.	
Rampur-Boalia. Zero of gauge is at P. W. D. datum.		Goalundo. Zero of gauge is 1·409 ft. above Bengal P. W. D. datum.		Berhampore. Zero of guage is at P. W. D. datum.		Swarupganj.† Zero of guage is at P. W. D. datum.				Gauhati. Zero of gauge is 136·958 ft. above P. W. D. datum.	
From Benares, 471.	From Rajmahal, 64.	From Benares, 591.	From Rampur-Boalia, 120.								
6th August 1879. 62 24 ft.		16th August 1931. 20·60 ft.		14th August 1890. 63·46 ft.		25th September 1900. 35·30 ft.				24th August 1906. 169·25 ft.	
24th April 1931. 32·05 ft.		8th February 1914. 2·41 ft.		26th May 1884. 32·00 ft.		7th May 1896. 2·11 ft.				9th February 1888. 129·23 ft.	
Height above zero of gauge.	Height above P. W. D. datum.	Height above zero of gauge.	Height above P. W. D. datum.	Height above zero of gauge.	Height above P. W. D. datum.	Height above zero of guage.		Height above P. W. D. datum.		Height above zero of gauge.	Height above P. W. D. datum.
						H. W. L.	L. W. L.	H. W. L.	L. W. L.		
15	16	17	18	19	20	21	22	23	24	25	26
62·70	62·70	25·90	27·309	58·82	58·82	28·26	28·22	28·26	28·22	18·00	154·958
62·95	62·95	25·80	27·209	59·20	59·20	28·32	28·28	28·32	28·28	17·90	154·858
62·95	62·95	25·60	27·009	59·50	59·50	28·55	28·44	28·55	28·44	18·40	155·358
62·90	62·90	25·60	27·009	59·78	59·78	28·73	28·67	28·73	28·67	19·40	156·358
62·90	62·90	25·50	26·909	59·92	59·92	28·80	28·78	28·80	28·78	20·00	156·958
62·70	62·70	25·30	26·709	59·91	59·91	28·84	28·81	28·84	28·81	20·00	156·958
62·45	62·45	25·20	26·609	59·78	59·78	28·91	28·88	28·91	28·88	19·70	156·658
62·10	62·10	25·10	26·509	59·52	59·52	28·97	28·94	28·97	28·94	19·60	156·558
61·85	61·85	24·90	26·309	59·20	59·20	29·00	28·99	29·00	28·99	19·00	155·958
61·60	61·60	25·00	26·409	58·77	58·77	28·98	28·97	28·98	28·97	18·50	155·458
61·30	61·30	24·90	26·309	58·32	58·32	28·94	28·90	28·94	28·90	18·80	155·758
60·90	60·90	25·00	26·409	57·78	57·78	28·87	28·82	28·87	28·82	19·10	156·058
60·55	60·55	24·90	26·309	57·12	57·12	28·74	28·66	28·74	28·66	18·70	155·658
60·40	60·40	24·70	26·109	56·60	56·60	28·57	28·45	28·57	28·45	19·60	156·558
60·60	60·60	24·80	26·209	56·33	56·33	28·34	28·25	28·34	28·25	21·20	158·158
60·85	60·85	24·90	26·309	56·35	56·35	28·19	28·07	28·19	28·07	22·80	159·758
61·05	61·05	25·10	26·509	56·54	56·54	28·00	27·97	28·00	27·97	22·60	159·558
61·30	61·30	25·30	26·709	56·70	56·70	28·04	27·99	28·04	27·99	22·30	159·258
61·45	61·45	25·50	26·909	56·95	56·95	28·35	28·11	28·35	28·11	22·00	158·958
61·45	61·45	25·70	27·109	57·20	57·20	28·64	28·50	28·64	28·50	21·60	158·558
61·35	61·35	25·90	27·309	57·45	57·45	28·81	28·72	28·81	28·72	22·20	159·158
61·30	61·30	26·10	27·509	57·45	57·45	28·90	28·86	28·90	28·86	21·80	158·758
61·05	61·05	26·10	27·509	57·45	57·45	28·96	28·95	28·96	28·95	21·50	158·458
60·45	60·45	26·00	27·409	57·10	57·10	28·97	28·96	28·97	28·96	21·20	158·158
59·80	59·80	25·80	27·209	56·50	56·50	28·94	28·86	28·94	28·86	19·00	155·958
59·00	59·00	25·60	27·009	55·80	55·80	28·76	28·66	28·76	28·66	18·50	155·458
58·50	58·50	25·40	26·809	54·10	54·10	28·52	28·34	28·52	28·34	18·70	155·658
58·15	58·15	25·10	26·509	54·40	54·40	28·14	27·91	28·14	27·91	19·10	156·058
58·20	58·20	24·80	26·209	53·90	53·90	27·66	27·38	27·66	27·38	18·80	155·758
58·50	58·50	24·60	26·009	53·80	53·80	27·12	26·85	27·12	26·85	18·50	155·458
61·04	61·04	25·34	26·749	57·41	57·41	28·56	28·47	28·56	28·47	19·62	156·578

the Kidderpore Old Dock Sill. The values of the highest and lowest readings have similarly been altered. Printed notes on the correction to be applied to all reduced le vel datum.

J. F. RUSSELL, *Personal Assistant to the Chief Engineer to the Government of Bengal, Irrigation Department.*

FORM C—BENGAL.

STATEMENT OF COTTON PRESSED IN THE BENGAL PRESIDENCY FOR THE WEEK ENDING THE 4th JANUARY 1935.

[Section 5 (2) of the Cotton Ginning and Pressing Factories Act, 1925.]

Name of Division or block.	Number of bales pressed.				Districts included in the block.
	During the week.	During the corresponding week last year.	Since 1st September 1934 (the date prescribed by the Local Government as the commencement of the season).	During the corresponding period last year.	
The Bengal Presidency	71 bales of 400 lbs. each.	99	2,451	3,082	All districts in the Presidency.

J. B. McBRIDE,
Chief Inspector of Factories, Bengal.

Statement of weekly gauge readings on the river Ganges at Rampur Boalia for the week ending the 5th January 1935.

Date.	Hour.	Height of surface above P. W. D. datum.	Height of surface above P. W. D. datum on the same date last year.	Remarks.
1934.				
30th December	7 a.m.	39·94	38·96	
31st „	7 „	39·94	38·86	
1935.				
1st January	7 „	39·84	38·76	Zero of gauge referred to B. M. on Rajshahi College step; value 64·73.
2nd „	7 „	39·84	38·66	Value of 0 of the gauge = 36·84 P. W. D.
3rd „	7 „	39·74	38·51	
4th „	7 „	39·74	38·41	
5th „	7 „	39·64	38·31	

Highest recorded level on 26-8-1879 = 64·24.
Lowest recorded level on 24-4-1931 = 32·05.

[ILLEGIBLE], for *Subdivisional Officer,*
Irrigation Department, Rajshahi.

Rampur Boalia, the 5th January 1935.

Statement showing the gauge readings at Dacca Waterworks Station on the river Buriganga for the week ending 22nd December 1934.

Date.	At highest water.		At lowest water.		Commencement of—		Remarks.	
	Time.	Reading.	Time.	Reading.	Ebb tide.	Flow tide.	At 7 a.m.	At 5 p.m.
1934.								
16th December ..	7-45	6·3	13-15	4·8	7-55	13-25	6·15	5·75
17th „ ..	8-35	6·05	14-5	4·6	8-47	14-15	5·8	5·3
18th „ ..	9-25	6·15	14-55	4·7	9-35	15-5	5·6	5·2
19th „ ..	10-15	6·0	15-40	4·6	10-25	15-50	5·35	4·8
20th „ ..	11-0	5·7	16-30	4·25	11-12	16-40	5·0	4·45
21st „ ..	11-50	5·8	..	..	12-0	..	4·6	4·8
22nd „ ..	12-40	5·8	6-35	4·3	12-50	6-45	4·4	5·0

B. M. on settling tank 39·49 O. M. S. L. Zero is at O. M. S. L.

Notable high and low water-levels of previous years.

		Taken at high tide.				Taken at low tide.
27th August	1906	.. 70·5	23rd February	1907	..	51·06
5th September	1909	.. 66·86	13th „	1908	..	51·06
10th August	1910	.. 69·86	12th March	1912	..	51·06
1st „	1911	.. 68·46	6th „	1914	..	50·60
13th „	1912	.. 67·16	22nd February	1915	..	50·30
31st „	1915	.. 69·7	15th „	1916	..	50·60
8th „	1916	.. 68·1	3rd March	1917	..	51·0
12th „	1917	.. 67·1	21st February	1918	..	51·40
13th „	1918	.. 69·12	26th „	1919	..	50·4
2nd „	1919	.. 66·8	18th „	1920	..	50·9
8th September	1920	.. 66·9	19th „	1921	..	50·9
28th July	1921	.. 68·4	8th March	1922	..	51·05
10th August	1922	.. 68·00	14th „	1923	..	50·8
31st July	1923	.. 66·15	16th February	1924	..	50·50
29th August	1924	.. 68·82	5th March	1925	..	50·9
8th September	1925	.. 68·52	9th February	1926	..	2·2
15th August	1926	.. 19·6	27th „	1927	..	2·10
17th September	1927	.. 18·70	16th „	1928	..	2·2
22nd August	1928	.. 20·0	21st „	1929	..	2·0
13th July	1929	.. 17·8	24th „	1930	..	2·3
12th September	1930	.. 18·65	28th „	1931	..	2·2
16th August	1931	.. 21·7	18th „	1932	..	1·8
6th September	1932	.. 18·5	6th „	1933	..	2·10
7th „	1933	.. 17·80				

N.B.—Zero of the gauge at Dacca Waterworks prior to 11 a.m. on the 8th January 1926 = −48·51 with reference to P. W. D. datum.

Zero of the gauge at Dacca Waterworks since 11 a.m. of the 8th January 1926 = 0·00 with reference to P. W. D. datum.

[ILLEGIBLE], for *Executive Engineer,*
Khulna Division.

Khulna, the 9th January 1935.

Statement showing the gauge readings at Dacca Waterworks Station on the river Buriganga for the week ending 29th December 1934.

Date.	At highest water.		At lowest water.		Commencement of—		Remarks.	
	Time.	Reading.	Time.	Reading.	Ebb tide.	Flow tide.	At 7 a.m.	At 5 p.m.
1934.								
23rd December ..	13-30	5·65	7-20	4·15	13-40	7-33	4·2	4·9
24th „ ..	14-20	5·5	8-35	4·0	14-30	8-43	4·25	4·7
25th „ ..	15-10	5·4	9-25	3·9	15-20	9-35	4·3	4·8
26th „ ..	16-0	5·3	10-10	3·8	16-7	10-20	4·4	5·05
27th „ ..	16-45	5·25	11-0	3·75	16-55	11-10	4·5	5·0
28th „ ..	17-30	5·1	11-45	3·6	17-42	11-57	4·35	5·0
29th „ ..	..	..	12-30	3·4	..	12-38	4·15	4·5

B. M. on settling tank 39·49 O. M. S. L. Zero is at O. M. S. I.

Notable high and low water-levels of previous years.

		Taken at high tide.				Taken at low tide.
27th August	1906 ..	70·5		23rd February	1907 ..	51·06
5th September	1909 ..	66·86		13th „	1908 ..	51·06
10th August	1910 ..	69·86		12th March	1912 ..	51·06
1st „	1911 ..	68·46		6th „	1914 ..	50·60
13th „	1912 ..	67·16		22nd February	1915 ..	50·30
31st „	1915 ..	69·7		15th „	1916 ..	50·60
8th „	1916 ..	68·1		3rd March	1917 ..	51·0
12th „	1917 ..	67·1		21st February	1918 ..	51·40
13th „	1918 ..	69·12		26th „	1919 ..	50·4
2nd „	1919 ..	66·8		18th „	1920 ..	50·9
8th September	1920 ..	66·9		19th „	1921 ..	50·9
28th July	1921 ..	68·4		8th March	1922 ..	51·05
10th August	1922 ..	68·00		14th „	1923 ..	50·8
31st July	1923 ..	66·15		16th February	1924 ..	50·50
29th August	1924 ..	68·82		5th March	1925 ..	50·9
8th September	1925 ..	68·52		9th February	1926 ..	2·2
15th August	1926 ..	19·6		27th „	1927 ..	2·10
17th September	1927 ..	18·70		16th „	1928 ..	2·2
22nd August	1928 ..	20·0		21st „	1929 ..	2·0
13th July	1929 ..	17·8		24th „	1930 ..	2·3
12th September	1930 ..	18·65		28th „	1931 ..	2·2
16th August	1931 ..	21·7		18th „	1932 ..	1·8
6th September	1932 ..	18·5		6th „	1933 ..	2·10
7th „	1933 ..	17·80				

N. B.—Zero of the gauge at Dacca Waterworks prior to 11 a.m on the 8th January 1926 = −48·51 with reference to P. W. D. datum.
Zero of the gauge at Dacca Waterworks since 11 a.m. of the 8th January 1926 = 0·00 with reference to P. W. D. datum.

Khulna, the 9th January 1935.

[ILLEGIBLE], for *Executive Engineer,*
Khulna Division.

IRRIGATION DEPARTMENT, BENGAL.

Abstract statement showing the approximate volume of traffic and the tollage on canals in Bengal classed as Major Works and Minor Works and Navigation for the month of November 1934 as compared with the corresponding month of the previous year.

Canals.	1934-35.					
	Weight of cargo.		Rafts.		Tollage	
	During the month.	To end of the month.	During the month.	To end of the month.	During the month.	To end of the month.
Major Works.	Tons.	Tons.	No.	No.	Rs.	Rs.
Midnapore Canal	854	10,699	4,225	10,550	925	11,354
Hijili Tidal Canal	1,097	15,944	250	450	1,371	30,385
Total ..	1,951	26,643	4,475	11,000	2,296	41,739
Minor Works and Navigation.						
Calcutta and Eastern Canals ..	33,394	197,625	15,371	48,686	22,888	1,39,415
Tolly's Nala	16,781	138,054	38,522	266,370	5,427	45,216
Madaripur Bil Route	2,142	696,976	2,795	5,720	2,369	3,70,215
Total ..	52,317	1,033,255	56,688	320,776	30,684	3,54,846
Magrahat Channels	3,802	24,429	2,005	8,360	1,847	11,187
Orissa Coast Canal	1,878	23,789	200	4,025	1,439	14,726
Grand Total ..	57,997	1,081,473	58,893	333,161	33,970	7,80,759

Canals.	1933-34.					
	Weight of cargo.		Rafts.		Tollage.	
	During the month.	To end of the month.	During the month.	To end of the month.	During the month.	To end of the month.
Major Works.	Tons.	Tons.	No.	No.	Rs.	Rs.
Midnapore Canal	909	9,330	..	8,725	743	9,739
Hijili Tidal Canal	1,042	21,622	..	1,050	1,912	37,247
Total ..	1,951	30,952	..	9,775	2,655	46,986
Minor Works and Navigation.						
Calcutta and Eastern Canals ..	39,890	207,030	20,570	64,717	27,126	1,46,314
Tolly's Nala	18,231	157,619	33,758	255,664	6,087	50,193
Madaripur Bil Route	3,293	554,575	3,505	8,935	2,812	1,45,207
Total ..	61,414	919,224	57,833	329,316	36,025	3,41,714
Magrahat Channels	2,814	21,516	1,925	6,998	2,253	12,899
Orissa Coast Canal	2,037	20,324	425	6,400	1,985	19,678
Grand Total ..	66,265	961,064	60,183	342,714	39,263	3,74,291

Canal.	November 1934.			
	Tollage, 1934-35.		Tollage, 1933-34.	
	During the month.	To end of the month.	During the month.	To end of the month.
	Rs.	Rs.	Rs.	Rs.
Sundarbans Steamer Route	5,260	43,526	5,618	41,222

J. F. RUSSELL,
Personal Assistant to the Chief Engineer to the Government of Bengal.

Calcutta, the 14th January 1935.

Printed and published by the Superintendent, Government Printing, Bengal Government Press, Alipore, Bengal, on the 17th January 1935.

Registered No. C207

The Calcutta Gazette

Extraordinary

Published by Authority

THURSDAY, JANUARY 24, 1935.

Orders by His Excellency the Governor of Bengal.

No. 624A.—24th January 1935.—Under the provisions of section 93 of the Government of India Act, His Excellency the Governor is pleased to accept the resignation tendered by Mr. G. A. Mason of his office of member of the Bengal Legislative Council.

No. 627A.—24th January 1935.—Whereas a vacancy has occurred in the Indian Jute Mills Association constituency of the Bengal Legislative Council by reason of the resignation by Mr. G. A. Mason, His Excellency the Governor is pleased, in pursuance of sub-rule (*1*) of rule 26 of the Bengal Electoral Rules, to call upon the said constituency to elect a person for the purpose of filling the vacancy by the 9th March 1935.

No. 631A.—24th January 1935.—Under the provisions of section 93 of the Government of India Act, His Excellency the Governor is pleased to accept the resignation tendered by Rai Sir Badridas Goenka Bahadur, Kt., C.I.E., of his office of member of the Bengal Legislative Council.

No. 634A.—24th January 1935.—Whereas a vacancy has occurred in the Bengal Marwari Association constituency of the Bengal Legislative Council by reason of the resignation by Rai Sir Badridas Goenka Bahadur, Kt., C.I.E., His Excellency the Governor is pleased, in pursuance of sub-rule (*1*) of rule 26 of the Bengal Electoral Rules, to call upon the said constituency to elect a person for the purpose of filling the vacancy by the 15th March 1935.

No. 662A.—24th January 1935.—Under the provisions of section 93 of the Government of India Act, His Excellency the Governor is pleased to accept the resignation tendered by Mr. C. C. Miller of his office of member of the Bengal Legislative Council.

No. 665A.—24th January 1935.—Whereas a vacancy has occurred in the Bengal Chamber of Commerce constituency of the Bengal Legislative Council by reason of the resignation by Mr. C. C. Miller, His Excellency the Governor is pleased, in pursuance of sub-rule (*1*) of rule 26 of the Bengal Electoral Rules, to call upon the said constituency to elect a person for the purpose of filling the vacancy by the 9th March 1935.

E. N. BLANDY,

Chief Secy. to the Govt. of Bengal (offg.).

GOVERNMENT OF BENGAL.

Appointment Department.

NOTIFICATIONS.

No. 629A.—24th January 1935.—Whereas by notification No. 627A., dated the 24th January 1935, His Excellency the Governor has been pleased to call upon the Indian Jute Mills Association constituency of the Bengal Legislative Council to elect a member to the said Council in place of Mr. G. A. Mason, resigned:

Now, therefore, the Governor in Council is pleased, in exercise of the powers conferred by clauses (*a*) and (*b*) of sub-rule (*2*) of rule 11 of the Bengal Electoral Rules, and in pursuance of sub-rule (*3*) of that rule, to prescribe the 5th February 1935 as the date for the nomination of candidates and for the delivery of nomination papers to the Returning Officer and the 6th February 1935 as the date on which the scrutiny of nominations shall be held.

No. 636A.—24th January 1935.—Whereas by notification No. 634A., dated the 24th January 1935, His Excellency the Governor has been pleased to call upon the Bengal Marwari Association constituency of the Bengal Legislative Council to elect a member to the said Council in place of Rai Sir Badridas Goenka Bahadur, Kt., C.I.E., resigned:

Now, therefore, the Governor in Council is pleased, in exercise of the powers conferred by clauses (*a*) and (*b*) of sub-rule (*2*) of rule 11 of the Bengal Electoral Rules, and in pursuance of sub-rule (*3*) of that rule, to prescribe the 5th February 1935 as the date for the nomination of candidates and for the delivery of nomination papers to the Returning Officer and the 6th February 1935 as the date on which the scrutiny of nominations shall be held.

No. 667A.—24th January 1935.—Whereas by notification No. 665A., dated the 24th January 1935, His Excellency the Governor has been pleased to call upon the Bengal Chamber of Commerce constituency of the Bengal Legislative Council to elect a member to the said Council in place of Mr. C. C. Miller, resigned:

Now, therefore, the Governor in Council is pleased, in exercise of the powers conferred by clauses (*a*) and (*b*) of sub-rule (*2*) of rule 11 of the Bengal Electoral Rules, and in pursuance of sub-rule (*3*) of that rule, to prescribe the 5th February 1935 as the date for the nomination of candidates and for the delivery of nomination papers to the Returning Officer and the 6th February 1935 as the date on which the scrutiny of nominations shall be held.

E. N. BLANDY,

Chief Secy. to the Govt. of Bengal (offg.).

Printed and published by the Superintendent, Government Printing, Bengal Government Press, Alipore, Bengal, on the 24th January 1935.

Registered No. C207

No. 4 of 1935

The Calcutta Gazette

Published by Authority

THURSDAY, JANUARY 24, 1935.

CONTENTS:

	Page.
Part I.—Orders and Notifications by the Governor of Bengal, the Government of Bengal, the High Court, Government Treasury, etc.	119—162
Part IA.—Orders and Notifications by the Government of India republished for general information	15—18
Part IB.—Educational Notices ..	215—248
Part II.—Advertisements	91—106
Part III.—Acts of the Bengal Legislative Council	*Nil*
Part IV.—Bills introduced in the Bengal Legislative Council, Reports of Select Committees presented or to be presented to that Council, and Bills published before introduction in that Council—	
Report of the Select Committee on the Estates Partition (Amendment) Bill, 1933, with the Bill as amended by the Committee	13—15
Part V.—Acts of the Indian Legislature assented to by the Governor-General and Ordinances promulgated under section 72 of the Government of India Act ..	*Nil*
Part VI.—Bills introduced in the Council of State and Legislative Assembly, Reports of Select Committees presented to the Council and Assembly and Bills published under rule 18 of the Indian Legislative Rules	*Nil*
Supplement No. 4 :—	
Resolution and Report of the case of sinking of the I. S. V. "Manoung"	97—104
Report of the Bengal Board of Economic Enquiry on rural indebtedness ..	105—164
First Forecast of the Wheat Crop of Bengal, 1934-35	165
Weekly gauge readings—Weekly Weather and Crop Report—Calcutta Improvement Trust Notice—Corporation of Calcutta Notices—Cotton Ginning and Pressing—Weekly Vital Statistics ..	166—175

PART I

Orders and Notifications by the Governor of Bengal, the Government of Bengal, the High Court, Government Treasury, etc.

Orders by His Excellency the Governor of Bengal.

No. 558A.—22nd January 1935.—Under the provisions of section 93 of the Government of India Act, His Excellency the Governor is pleased to accept the resignation tendered by Mr. C. G. Ashworth of his office of member of the Bengal Legislative Council.

No. 561A.—22nd January 1935.—Whereas vacancy has occurred in the Presidency and Burdwan (European) Constituency of the Bengal Legislative Council by reason of the resignation by Mr. C. G. Ashworth, His Excellency the Governor is pleased, in pursuance of sub-rule (*1*) of rule 26 of the Bengal Electoral Rules, to call upon the said constituency to elect a person for the purpose of filling the vacancy by the 23rd March 1935.

E. N. Blandy,

Chief Secy. to the Govt. of Bengal (offg.)

Orders by the Government of Bengal.

No. 581A.

Appointments and Transfers.

GENERAL.

No. 423A.—16th January 1935.—The services of Mr. J. B. Bird, I.C.S., on leave, are placed at the disposal of the Government of India in the Finance Department (Central Revenues).

Chittagong - Dacca Divn.—No. 428A.—17th January 1935.—Maulvi Maniruddin Ahmad, Sub-Deputy Collector, Chittagong, is posted temporarily to the Dacca Division.

Midnapore - Presidency Divn.—No. 433A.—17th January 1935.—Babu Sachindra Nath Mitra, Sub-Deputy Collector, Midnapore, is posted temporarily to the Presidency Division.

Jalpaiguri - Presidency Divn.—No. 438A.—17th January 1935.—Babu Lalit Kumar Datta, Sub-Deputy Collector, Jalpaiguri, is posted temporarily to the Presidency Division.

Midnapore - Noakhali.—No. 463A.—17th January 1935.—Babu Birendra Nath Bose, Deputy Magistrate and Deputy Collector, on probation, Midnapore, is transferred to the headquarters station of the Noakhali district.

Chittagong Divn. — No. 529A. — 18th January 1935.—Maulvi Bazlur Rahman, Sub-Deputy Collector, on leave, is posted to the Chittagong Division.

POLICE.

Murshidabad-Bakarganj Range.—No. 406A.—15th January 1935.—Mr. G. H. Mannooch, I.P., Superintendent of Police, Murshidabad, is appointed to act, until further orders, as Deputy Inspector-General of Police, Bakarganj Range.

Hooghly. — No. 412A. — 15th January 1935.—Babu Kiran Chandra Sen, Inspector of Police, on leave, is appointed to act as Deputy Superintendent of Police and is posted to the headquarters station of the Hooghly district.

ECCLESIASTICAL.

Calcutta.—No. 502A.—18th January 1935.—The Reverend George Thomas Rogers, who has recently been appointed as a Chaplain on probation on the Indian Ecclesiastical Establishment, is appointed to be Junior Chaplain, St. Paul's Cathedral, Calcutta, with effect from the 14th January 1935.

Leave.

GENERAL.

Mymensingh.—No. 340A.—14th January 1935.—In modification of the orders of the 8th December 1934, Maulvi S. M. Siddique Ahmad, Sub-Deputy Collector, Tangail, Mymensingh, is allowed leave on average pay for three months and twenty-seven days, under rule 81 (*b*) (*ii*) of the Fundamental Rules, with effect from the 2nd November 1934.

Faridpur. — No. 343A. — 14th January 1935.—In modification of the orders of the 26th December 1934, Babu Kshirod Prasad Barua, Sub-Deputy Collector, Goalundo, Faridpur, is allowed leave on average pay for one month and fifteen days, under rule 81 (*b*) (*ii*) of the Fundamental Rules, with effect from the 9th January 1935.

Mymensingh.—No. 386A.—15th January 1935.—In modification of the orders of the 26th November 1934, Babu Bankim Chandra Adhya, Sub-Deputy Collector, Netrakona, Mymensingh, was allowed leave on average pay, under rule 81 (*b*) (*ii*) of the Fundamental Rules, from the 5th November to the 22nd December 1934, inclusive.

Tippera.—No. 389A.—15th January 1935.—The orders of the 26th December 1934, granting leave to Babu Nripendra Mohan Chakrabatti, Sub-Deputy Collector, Tippera, are cancelled.

No. 448A.—17th January 1935.—The orders of the 2nd October 1934, granting leave to Babu Pramodaranjan Das Gupta, Deputy Magistrate and Deputy Collector, who was employed in the Settlement Department, are cancelled.

Calcutta.—No. 469A.—17th January 1935.—In modification of the orders of the 7th January 1935, Mr. N. G. A. Edgley, I.C.S., Secretary to the Government of Bengal in the Judicial Department and Superintendent and Remembrancer of Legal Affairs, Bengal, is allowed leave on average pay, under rule 81(*b*)(*i*) of the Fundamental Rules, from the 5th January to the 26th January 1935, inclusive.

No. 474A.—17th January 1935.—Mr. Annada Sankar Ray, I.C.S., was allowed leave on average pay up to the 15th January 1935, under rule 81(*b*)(*ii*) of the Fundamental Rules, in extension of the leave granted to him under the orders of the 24th September 1934.

Rangpur.—No. 510A.—18th January 1935.—Mr. Karunaketan Sen, I.C.S., Assistant Magistrate and Collector, Rangpur, was allowed leave not due on half average pay for seven days, under rule 81(*c*)(*ii*) of the Fundamental Rules, with effect from the 13th November 1934.

Faridpur.—No. 513A.—18th January 1935.—Mr. Belthangadi Gopalakrishna Rao, I.C.S., Assistant Magistrate and Collector, Faridpur, was allowed leave not due on half average pay for five days, under rule 81(*c*)(*ii*) of the Fundamental Rules, with effect from the 16th November 1934.

Hooghly.—No. 516A.—18th January 1935.—Mr. Muizuddin Ahmad, I.C.S., Assistant Magistrate and Collector, Hooghly, was allowed leave not due on half average pay for two days, under rule 81(*c*)(*ii*) of the Fundamental Rules, with effect from the 18th November 1934.

No. 535A.—18th January 1935.—Maulvi Saiyid Abbas Ali, Sub-Deputy Collector, is allowed leave on average pay for two months, under rule 81 (*b*) (*ii*) of the Fundamental Rules, in extension of the leave granted to him under the orders of the 9th October 1934.

POLICE.

Bakarganj Range. — No. 403A. — 15th January 1935.—Mr. J. C. Farmer, I.P., Deputy Inspector-General of Police, Bakarganj Range, is allowed leave for three months, viz., leave on average pay for one month and thirteen days, under rule 81 (*b*) (*i*) of the Fundamental Rules, with effect from the 15th January 1935, and leave on half average pay for the remaining period, under rule 81 (*d*) of those Rules.

E. N. BLANDY,

Chief Secy. to the Govt. of Bengal (offg.).

NOTIFICATION.

No. 563A.—22nd January 1935.—Whereas by notification No. 561A., dated the 22nd January 1935, His Excellency the Governor has been pleased to call upon the Presidency and Burdwan (European) Constituency of the Bengal Legislative Council to elect a member to the said Council in place of Mr. C. G. Ashworth, resigned:

Now, therefore, the Governor in Council is pleased, in exercise of the powers conferred by clauses (*a*) and (*b*) of sub-rule (*2*) of rule 11 of the Bengal Electoral Rules, and in pursuance of sub-rule (*3*) of that rule, to prescribe the 4th February 1935 as the date for the nomination of candidates and for the delivery of nomination papers to the Returning Officer and the 6th February 1935 as the date on which the scrutiny of nominations shall be held.

E. N. BLANDY,

Chief Secy. to the Govt. of Bengal (offg.).

POLITICAL DEPARTMENT.

Political.

NOTIFICATIONS.

No. 436P.—16th January 1935.—Whereas it appeared to the District Magistrate of Chittagong that the letting off of bombs or fireworks in Chittagong was likely to cause obstruction to the authorities responsible for the preservation of the public tranquillity and whereas he issued an order, dated the 28th September 1932, under section 144 of the Code of Criminal Procedure, 1898, directing all persons to abstain from letting off any bombs or fireworks within the police-stations of Kotwali, Double Moorings and Panchalaish:

And whereas it appears to the local Government that the conditions in Chittagong which led to the issue by the District Magistrate of the aforesaid order still continue and that the letting off of bombs or fireworks is likely to cause a danger to human life or safety:

Now, therefore, in exercise of the power conferred by section 144 (*6*) of the Code of Criminal Procedure, it is hereby directed that the said order shall remain in force for a further period of two months with effect from the 27th January 1935.

Calcutta.—No. 440P.—16th January 1935.—In pursuance of sub-section (*2*) of section 28 of the Auxiliary Force Act, 1920 (XLIX of 1920), and in partial modification of Political Department notification No. 4194P., dated the 10th April 1934, the Governor in Council is pleased to appoint Mr. H. J. Twynam, C.I.E., I.C.S., to be a member of the Advisory Committee for the Calcutta Military area, *vice* Mr. C. W. Gurner, I.C.S., resigned. He will hold office up to the 31st March 1935.

No. 450P.—16th January 1935.—In exercise of the powers conferred by section 12 of the Indian Territorial Force Act, 1920 (XLVIII of 1920), the Governor in Council is pleased to appoint Mr. H. J. Twynam, C.I.E., I.C.S., to be a member of the Provincial Advisory Committee, Indian Territorial Force, constituted in notification No. 4641P., dated the 21st April 1933, *vice* Mr. C. W. Gurner, I.C.S., resigned.

Mr. H. J. Twynam is hereby appointed to be the President of the said Committee.

No. 518P.—17th January 1935.—In exercise of the power conferred by section 24 of the Bengal Suppression of Terrorist Outrages Act, 1932 (Ben. Act XII of 1932), the Governor in Council is pleased to invest Maulvi Abdul Halim Chaudhuri, Sadar (South) Subdivisional Magistrate, Dacca, with the powers of a Special Magistrate under the said Act.

No. 550P.—18th January 1935.—In exercise of the power conferred by section 12, sub-section (*1*) of the Indian Territorial Force Act, 1920 (Act XLVIII of 1920), the Governor in Council is pleased to appoint Mr. A. Macdonald, I.E.S., Principal, Bengal Engineering College, Sibpur, to be a member of the Unit Advisory Committee of the 2nd (Calcutta) Battalion, University Training Corps, constituted under this Government notification No. 8625P., dated the 17th August 1933, *vice* Mr. J. Buchanan, resigned.

Mr. A. Macdonald is hereby appointed to be the President of the said Committee.

No. 561P.—18th January 1935.—The order promulgated in notification No. 26314P., dated the 28th December 1932, published in the *Calcutta Gazette*, dated the 5th January 1933, is hereby cancelled.

Jails.

NOTIFICATION.

Bankura. — No. 142P.J. — 15th January 1935.—In exercise of the powers conferred by clause (*d*) of sub-section (*2*) of section 16 of the Bengal Borstal Schools Act, 1928 (Bengal Act I of 1928), the Governor in Council is pleased to make the following amendment in the rules for the control and management of the Borstal School, Bankura, published under notification No. 2300P.J., dated the 19th November 1928:—

Amendment.

Insert the following at the end of rule 6 of the said rules:—

In the case of candidates for the Matriculation Examination, however, the periods of literary instruction and manual labour for the eight months immediately preceding the examination shall be 5 hours and 2 hours, respectively.

E. N. BLANDY,

Chief Secy. to the Govt. of Bengal (offg.).

Orders by the Inspector-General of Prisons, Bengal.

No. 609.—15th January 1935.—Dr. Narendra Nath Choudhury made over charge of the Dinajpur Jail to Dr. Upendra Nath Sarkar on the afternoon of the 31st December 1934.

No. 962.—16th January 1935.—Lt.-Col. P. Banerjee, I.M.S., made over charge of the Chittagong Jail to Dr. K. C. Sen Gupta on the afternoon of the 22nd December 1934.

No. 1026.—17th January 1935.—Dr. Aghor Nath Ghose made over charge of the Suri Jail to Dr. Madhusudan Mukherji on the afternoon of the 6th January 1935.

No. 1297.—21st January 1935.—Dr. Upendra Chandra Sarkar made over charge of the Dinajpur Jail to Dr. Aghor Nath Ghosh on the forenoon of the 16th January 1935.

R. E. FLOWERDEW, LT.-COL., I.M.S.,

Inspector-General of Prisons, Bengal.

POLICE DEPARTMENT.

NOTIFICATION.

Faridpur.—No. 376Pl.—18th January 1935.—In exercise of the power conferred by section 2 of the Bengal Public Gambling Act, 1867 (Bengal Act II of 1867), the Governor in Council is pleased to extend all the sections of the said Act (except section 13 which already applies) to the whole of the mauzas mentioned in column 2, within the police-stations noted in column 1 of the undermentioned schedule, in the district of Faridpur:—

Schedule.

Name of police-station.	Name of mauza with jurisdiction list number.
Palong ...	Gayghar, No. 21.
	Kundharia, No. 54.
	Chikandi, No. 55.
	Bharatnisar, No. 66.
	Koarpur, No. 68.
Janjira ...	Bhanu Munshirkandi, No. 190.
	Lakhai Kazir Kandi, No. 192.
	Chhari Mamud Sikdarerkandi, No. 193.
	Kachhari Kandi, No. 196.
	Hamgaon, No. 116.
	Nagar Boalia, No. 122.
	Boalia, No. 123.
	Laukhola, No. 129.
	Jaynagar, No. 106.
	Charkhoratala, No. 110.
	Khoratala, No. 111.
	Char Jaynagar, No. 112.
	North Kebalnagar, No. 113.

E. N. BLANDY,

Chief Secy. to the Govt. of Bengal (offg.).

JUDICIAL DEPARTMENT.

Appointments and Transfers.

24-Parganas. — No. 267J.—15th January 1935.—In exercise of the powers conferred by sections 14 and 15 and the proviso to section 357 of the Code of Criminal Procedure, 1898 (Act V of 1898), the Governor in Council is pleased—

(*a*) to confer upon Babu Jatindra Mohan Basu the powers of a Magistrate of the second class, in the district of the 24-Parganas, for a period of three years from the 30th January 1935, in respect to such cases as may be made over to him within the limits of the jurisdiction of the Sealdah Police Court,

(*b*) to direct that he shall, in addition to sitting singly, sit as a member of the Sealdah bench in the said district, and

(*c*) to direct him to take down evidence in the English language.

Chittagong. — No. 287J. — 16th January 1935.—In exercise of the powers conferred by sections 14 and 15 and the proviso to section 357 of the Code of Criminal Procedure, 1898 (Act V of 1898), the Governor in Council is pleased—

(*a*) to confer upon Maulvi Sheikh Rafiuddin Ahmed Siddiki the powers of a Magistrate of the second class, in the district of Chittagong, for a period of three years from the date of this notification, in respect to such cases as may be made over to him within the limits of the Sadar subdivision of the said district,

(*b*) to direct that he shall, in addition to sitting singly, sit as a member of the Sadar bench in the said district, and

(*c*) to direct him to take down evidence in the English language.

Bankura - 24-Parganas. — No. 309J.—16th January 1935.—Babu Santosh Kumar Ray, who last acted as a munsif of Khatra, in the district of Bankura, is appointed to act as a munsif in the district of the 24-Parganas, to be ordinarily stationed at Baruipur, during the absence, on leave, of Maulvi Enayetur Rahman, or until further orders.

Calcutta.—No. 321J.—17th January 1935.—Mr. Anil Prakash Basu, Bar.-at-Law, is appointed to be a Judge of the Court of Small Causes, Calcutta, *vice* Mr. N. C. Sen, deceased.

Mymensingh.—No. 375J.—18th January 1935.—Babu Gauri Sankar Chatarji, officiating munsif of Jamalpur, in the district of Mymensingh, acted as a munsif of Sherpur in the said district, *vice* Babu Sailesh Chandra Sen Gupta, from the 20th November to the 1st December 1934, and thereafter again as a munsif of Jamalpur from the 3rd to the 22nd December 1934.

24-Parganas-Jessore.—No. 386J. — 19th January 1935.—Maulvi Abdul Mannan, who last acted as a munsif of Alipore, in the district of the 24-Parganas, is appointed to act as a munsif in the district of Jessore, to be ordinarily stationed at Magura, during the absence, on leave, of Babu Manmatha Kumar Ray, or until further orders.

Resignation.

24-Parganas. — No. 285J.—16th January 1935.—The Governor in Council is pleased to accept the resignation tendered by Mr. Birendra Nath Roy of his appointment as an Honorary Magistrate of the Alipore bench in the district of the 24-Parganas.

Powers.

24-Parganas. — No. 247J.—14th January 1935.—In exercise of the power conferred by the proviso to section 357 of the Code of Criminal Procedure, 1898 (Act V of 1898), the Governor in Council is pleased to direct Babu Sasi Bhusan Chakrabatti and Babu Surendra Nath Sil, Honorary Magistrates of the Rajpur bench, in the district of the 24-Parganas, to take down evidence in the English language.

NOTIFICATION.

Burdwan.—No. 244J.—14th January 1935. —In exercise of the powers conferred by sections 65 and 73 of the Bengal Village Self-Government Act, 1919 (Bengal Act V of 1919), the Governor in Council is pleased to cancel so much of notifications Nos. 6660J. and 6661J., dated the 18th August 1932, published at pages 1526 and 1528 of Part I of the *Calcutta Gazette* of the 25th August 1932, regarding the reconstitution of certain union benches and union courts in the Katwa subdivision of the Burdwan district, as relate to the reconstitution of the union bench and the union court within the jurisdiction of the Gotistha union board.

T. J. Y. ROXBURGH,

Secy. to the Govt. of Bengal (offg.).

LOCAL SELF-GOVERNMENT DEPARTMENT.

NOTIFICATIONS.

Minister-in-charge: The Hon'ble Sir Bijoy Prasad Singh Roy, Kt.

Hooghly.—No. 180M.—11th January 1935.—The following draft of a set of by-laws, which has been framed by the Commissioners of the Hooghly-Chinsura Municipality, in the district of Hooghly, under section 463 of the Bengal Municipal Act, 1932 (Bengal Act XV of 1932), and which the Government of Bengal (Ministry of Local Self-Government) propose to confirm under section 506 of the Act, is published for the information of persons likely to be affected thereby.

2. The draft will be taken into consideration on the 15th March 1935, and any objection or suggestion received by the undersigned through the District Magistrate and the Divisional Commissioner before that date will be duly considered:—

Draft by-laws.

By-laws under section 463 of the Bengal Municipal Act, 1932, for the maintenance of survey maps.

1. The owner of any land or building in the Municipality shall give notice in writing to the Commissioners of any alteration in the boundary of such land, or of the erection of any new building thereon, or of any material alteration or addition to any building owned by him, within one month of such erection, addition or alteration.

Fine, Rs. 25.

2. The owner of any land or building in the Municipality shall, on a notice from the Commissioners, erect conspicuous boundary marks of such materials and dimensions as may be prescribed by the Municipal Commissioners, clearly defining the limits of all lands owned by him which form separate holdings:

Provided that on the joint request of owners of adjoining plots, the Municipal Commissioners may allow joint boundary marks.

Fine, Rs. 25.

3. The owner of any land or building in the Municipality who has erected boundary marks under by-law 2 shall, on a notice from the Municipal Commissioners, replace or repair any boundary mark which is defective.

Fine, Rs. 25.

Midnapore.—No. 228M. — 12th January 1935.—The following draft of a set of by-laws, which has been framed by the Commissioners of the Tamluk Municipality under section 328 of the Bengal Municipal Act, 1932 (Bengal Act XV of 1932), and which the Government of Bengal (Ministry of Local Self-Government) propose to confirm under section 506 of the Act, is published for the information of persons likely to be affected thereby.

2. The draft will be taken into consideration on the 21st February 1935, and any objection or suggestion received by the undersigned through the District Magistrate before that date will be duly considered:—

Draft by-laws.

Building by-laws regulating construction of buildings in the Tamluk Municipality.

1. *Particulars to accompany application of erecting or re-erecting a masonry building.*—Every person who intends to erect or re-erect a mansory building shall forward to the Chairman an application with a plan and specification of the building and a site plan of the land on which he proposes to make the erection or re-erection. In the said application he shall give a description of the building and its dimensions and shall indicate the position of the site, the number assigned to it in the assessment book, its dimensions, and such other particulars as may be required by the Commissioners.

2. *Floor of buildings used for manufacture and storage of article for human consumption.*—The floor of every masonry building intended to be used for the manufacture or storage of articles for human consumption shall be constructed of some impermeable material approved by the Commissioners.

3. *Building over municipal drain.*—A masonry building shall not extend over any municipal drain.

4. *Level of floor.*—The lowest floor of every masonry building erected or re-erected from the ground shall be constructed at such level as will admit of the construction of a drain sufficient for the effectual drainage of the building and placed at such level as will admit of the drainage being led into an existing or projected municipal drain.

5. *Foundation.*—Except with the sanction of the Commissioners, the foundation of a masonry building shall rest on natural ground.

6. *Plinth.*—The plinth of a masonry building shall be at least two feet above the level of the centre of the nearest street, provided that the plinth of stables and cowsheds need not be more than one foot above such level.

7. *(1) Walls in building exceeding one story in height.*—If a masonry building exceeds one story in height—

(*a*) no part of any wall, other than a cornice or a moulding, shall overhang any part of a wall underneath it; and

(*b*) every wall shall be of such thickness as the Commissioners may consider necessary to ensure safety, regard being had to the height of the building, the materials of which it is constructed and the purpose for which it is intended.

(*2*) Nothing contained in sub-rule (*1*) shall prevent the erection of a second story upon an existing masonry building, the walls of which are certified by the Commissioners as being able to bear the load proposed to be put upon them.

8. *Interior courtyards and open spaces to be raised.*—Every interior courtyard and every open space shall be raised at least one foot above the level of the centre of the nearest street, so as to admit of easy drainage.

9. *Height.*—No masonry building exceeding fifty feet in height shall be erected without the special permission of the Commissioners.

10. *Site plan.*—The site plan sent to the Chairman under rule 1 shall be drawn to a scale of not less than one-fiftieth of an inch to a foot, shall be sent in duplicate and shall show—

(*a*) the boundaries of the site and of any contiguous land belonging to the owner thereof;

(*b*) the position, form and dimensions of privies, urinals, drains, cesspools, stables, cattle-sheds, cowsheds, wells and other appurtenances of the building;

(*c*) the space which it is proposed to leave about the building to secure the free circulation of air, the admission of light and access for scavengering purposes; and

(*d*) such other particulars as may be required by the Commissioners.

11. *Building plan.*—The plan of the building (and the elevations and sections, whenever necessary) sent to the Commissioners under rule 1, shall be neatly and accurately drawn to a scale of not less than one-eighth of an inch to a foot, shall be sent in duplicate and shall show—

(*a*) the depth and width of the foundation of the building;

(*b*) the level of the lowest floor of the building; and

(*c*) the level of all courtyards and open spaces in the building or premises and the plinth level of the building with reference to the level of the centre of the nearest street.

12. *Specifications.*—The specifications sent to the Chairman with any such plan shall comprise full information as to the following particulars:—

(*i*) the manner in which the roof and house drainage and the surface drainage of the land will be disposed of;

(*ii*) the means of access to service privies that will be available to scavengers;

(*iii*) the means of ingress and egress if the holding is intended to be used as a dwelling house for two or more families or as a place for carrying on any trade or business in which more than 20 people may be employed or as a place of public resort; and

(*iv*) such other particulars as may be required by the Commissioners.

13. *Signature in plans, elevations and sections.*—The plan, elevation and sections referred to in rules 10 and 11 shall be signed clearly and in a prominent place by the owner of the building, or, if he is illiterate, by any other person authorised by him to sign in his behalf, in which case they shall be marked with the owner's thumb impression.

14. *Chairman to sign approved plans.*—The Chairman shall sign all passed plans in token of the approval of the Commissioners.

15. *Restriction on application to certain rules.*—Rules 1, 10, 11, 12, 13 and 14 shall not be applied in the case of any alteration of or in addition to a masonry building unless one or more of the following works is undertaken, namely:—

(*a*) the construction of a roof or an external or party-wall;

(*b*) any repairs to the building which involve the reconstruction of a masonry wall after the same has been entirely or in a great part demolished;

(*c*) the closing of any door or window in an external wall;

(*d*) the construction or removal of an internal wall or partition;

(*e*) any other alteration of the internal arrangements of a building which affects its courtyard or courtyards or its drainage or ventilation or sanitary arrangements or which affects its security;

(*f*) the addition of any building, room, outhouse or other structure;

(*g*) the roofing of any space adjoining a wall or building; and

(*h*) the alteration of a building for the purpose of effecting a partition.

16. The penalty for the infringement of any of the by-laws Nos. 2 to 9 shall be—

(*a*) a fine not exceeding Rs. 50 and

(*b*) in the case of a continuing infringement, a daily fine not exceeding Rs. 5 for each day after written notice of the offence is served by the Commissioners.

24-Parganas.—No. 298M.—17th January 1935.—The following draft of a set of by-laws, which has been framed by the Commissioners of the Dum Dum Municipality, in the district of 24-Parganas, under section 245 (*a*) and (*b*) of the Bengal Municipal Act, 1932 (Bengal Act XV of 1932), and which Government of Bengal (Ministry of Local Self-Government) propose to confirm under section 506 of the Act, is published for the information of persons likely to be affected thereby.

2. The draft will be taken into consideration on the 1st April 1935 and any objection or suggestion received by the undersigned through the District Magistrate and the Divisional Commissioner before that date will be duly considered:—

Draft by-laws.

By-laws regarding prohibition and regulation of traffic under section 245 (a) and (b) of the Bengal Municipal Act, 1932.

Definition.

1. In these by-laws "cattle" means cattle as defined in section 3 of the Cattle Trespass Act, 1871 (I of 1871).

Penalties.

2. *Fines.*—The penalty for the infringement of any of these by-laws shall be—

(*a*) a fine not exceeding the sum stated at the foot of the by-law,

(*b*) in the case of a second or subsequent conviction for a similar offence a fine not exceeding the sum (if any) stated in that behalf at the foot of the by-law, and

(*c*) in the case of a continuing offence, a further fine not exceeding the sum (if any) stated at the foot of the by-law as the daily fine, which daily fine may be imposed for each day after written notice of the offence from the Commissioners.

Regulation of traffic on public streets.

3. *Youthful drivers.*—No owner of any carriage or cart shall allow it to be driven on any public street by a driver under fourteen years of age.

Fine, Rs. 10.

4. *Driving more than one carriage or cart.*—No driver shall drive or have in his charge on any public street more than one carriage or cart, except in the case of two carts the hinder one of which is severely fastened to the preceding cart.

Fine, Rs. 10.

5. *Standing vehicles.*—No person shall keep standing on any public street any vehicle, in such a manner as to cause inconvenience to the public, for any time longer than may reasonably be required for loading or unloading or for taking up or setting down passengers.

Fine, Rs. 10; on a second or subsequent conviction, Rs. 50.

6. *Charge of carriage or cart.*—No person shall leave any carriage or cart on any public street without a person in charge thereof.

Fine, Rs. 10; on a second or subsequent conviction, Rs. 50.

7. *Rule of the road.*—Any person driving a carriage or cart, or riding a bicycle, or driving or riding an animal, or carrying a palanquin, on any public street, shall keep to his left when he passes a vehicle coming from the opposite direction or when any vehicle overtakes him, and shall keep to his right when overtaking any vehicle.

Fine, Rs. 10.

8. *Lights.*—No person shall drive any of the undermentioned vehicles or animals, or convey any palanquin, on any public street, between half-an-hour after sunset and half-an-hour before sunrise, unless lights are provided as follows:—

(*a*) every carriage must carry two conspicuous lights, one on each side;

(*b*) every cart must carry one conspicuous light;

(*c*) every elephant, camel or palanquin must be accompanied by one conspicuous light;

(*d*) every cycle must carry one conspicuous light in front:

Provided that this by-law shall not apply on nights of full-moon or on the four nights before and after full-moon, if and when the moon is clearly visible.

Fine, Rs. 50.

9. *Signals on motors and cycles.*—No person shall drive any motor-car, or ride any motor-cycle or any tricycle or bicycle, on any public street unless it has attached to it a bell, horn or other suitable signal in good order.

Fine, Rs. 50.

10. *Maximum load for carts.*—No cart shall, without the general or special permission of the Commissioners, carry on any public street a load in excess of twenty maunds.

Fine, Rs. 10.

11. *Vehicles laden with girders, etc.*—No person shall drive upon a public street any vehicle laden with iron girders, rails, beams, bullas, bamboos, planks or other materials of a similar character which exceed twelve feet in length, unless the vehicle be accompanied by another person and be loaded in such a way that no portion of the said materials touches the ground.

Fine, Rs. 10.

12. *Vehicles laden with bricks, stones, etc.*—No person shall drive upon a public street any vehicle laden with bricks, stones or other materials of a similar character, unless such materials be so secured that they cannot fall on to the street.

Fine, Rs. 10.

13. *Animal laden with bamboos or timber.*—No person shall convey on any public street bamboos or timber placed on the back of any animal in such a way that any portion of such bamboos or timber touches the ground.

Fine, Rs. 10.

14. *Taking elephants or camels along a public street.*—No person shall, without the general or special permission of the Commissioners, take any elephant or camel along any public street.

Fine, Rs. 50.

15. *Taking an elephant over a bridge.*—No person shall allow any elephant in his charge to go over any bridge on any public street unless the bridge be constructed of arched masonry, steel or ferro-concrete or similar durable material.

Fine, Rs. 50.

16. *Loaded pack-animals.*—No person shall drive upon a public street, at the same time, more than two loaded pack-animals.

Fine, Rs. 10.

17. *Foals.*—No person riding or driving a mare on any public street shall allow a foal to accompany the mare unless it is secured.

Fine, Rs. 10.

18. *Driving cart in centre of a public street.*—No person shall drive a cart on the centre of any public street on which cart-tracks are provided.

Fine, Rs. 10.

19. *Sitting or sleeping.*—No person shall sit or sleep on any public street so as to obstruct traffic.

Fine, Rs. 10.

Regulation of traffic on foot-paths.

20. *Driving or riding on foot-paths.*—No person shall wilfully drive or ride any vehicle or cattle on any foot-path set apart for the use of foot-passengers.

Fine, Rs. 10.

Prevention of obstructions, encroachments or excavations on or near public streets, ghats or ferries.

21. *Abandoning or letting loose cattle.*—No person shall abandon or let loose or negligently allow to get loose any cattle on any public street.

Fine, Rs. 10.

22. *Children playing or wandering.*—No parent or guardian of any child below the age of seven years shall allow such child to play or wander about on any public street so as to obstruct traffic.

Fine, Rs. 10.

23. *Depositing articles.*—No person shall, without the general or special permission of the Commissioners, deposit any articles on any public street, except for a temporary purpose, or use any public street as a place for keeping any vehicle or cattle, or for washing any article, or for any other private purpose:

Provided that, during the months of April, May and June, between the hours of 10 p.m. and 5 a.m., khatias may be laid on the side of a public street in such a manner as not to cause obstruction or danger to persons using the public street.

Fine, Rs. 10.

24. *Planting trees.*—No person shall plant a tree on any public street without the general or special permission of the Commissioners.

Fine, Rs. 10.

25. *Excavations and enclosures.*—No person shall, without the general or special permission of the Commissioners, make any excavation on any public street or on or near any ghat or public ferry or enclose any such street or any part thereof.

Fine, Rs. 10; daily fine, Rs. 2.

26. *Removing turf or cutting grass.*—No person shall, without the general or special permission of the Commissioners, remove turf or cut grass from any public street or the slopes thereof.

Fine, Rs. 10.

27. *Discharge of water.*—No person shall affix or cause to be affixed to any building owned or occupied by him any gutter, spout or other thing intended for the conveyance and discharge of water, or shall leave in any such building any opening for the discharge of water, in such a way that the water discharged therefrom is thrown or falls upon a public street except through a downpipe or other suitable contrivance reaching to the level of the public street.

Fine, Rs. 10; daily fine, Rs. 2.

28. *Breaking in horses.*—No person shall break in horses on any public street not set apart for that purpose.

Fine, Rs. 10; on a second or subsequent conviction, Rs. 50.

29. *Flying kites.*—No person shall fly a kite on any public street or in such a way that it may fall on any public street.

Fine, Rs. 10.

30. *Playing games.*—No person shall play any game on any public street.

Fine, Rs. 10.

31. *Throwing stones or missiles.*—No person shall throw or discharge any stone or missile on or near any public street.

Fine, Rs. 10.

32. *Driving across a drain.*—No person shall drive any vehicle across a public drain in or near any public street so as to cause damage to such drain.

Fine, Rs. 10.

33. *Barbed wire.*—No owner or occupier of land abutting on any public street shall fence such land with barbed wire.

Fine, Rs. 10; daily fine, Rs. 2.

34. *Dust-bins.*—No person shall—

(*a*) place any burning material in any municipal dust-bin on or near a public street, or

(*b*) burn in any such dust-bin any paper, leaves, grass, wood or other material.

Fine, Rs. 10.

35. *Closed public street.*—No person shall take or drive any motor vehicle, carriage or cart on a public street or part of a street which is closed by order of the Commissioners to all or any specified description of wheeled traffic or displace any barrier or fence or notice erected for the purpose of closing such public street or part thereof.

Fine, Rs. 10.

Regulation of the use or occupation of public streets or places for sale of articles, etc., and provision for the levy of fees for such use or occupation.

36. *Exposing articles for sale.*—Without the general or special permission of the Commissioners which may, if they so direct, be subject to the payment of fees according to a scale prescribed by them at a meeting, no person shall use or occupy any public street or any other public place for the sale of any article or for the exercise of any calling or for setting up any booth or stall.

Fine, Rs. 10; on a second or subsequent conviction, Rs. 50.

Hooghly.—No. 301M.—17th January 1935.—The following draft of a set of by-laws, which has been framed by the Commissioners of the Bansberia Municipality, in the district of Hooghly, under section 245 (*a*) and (*b*) of the Bengal Municipal Act, 1932 (Bengal Act XV of 1932), and which Government of Bengal (Ministry of Local Self-Government) propose to confirm under section 506 of the Act, is published for the information of persons likely to be affected thereby.

2. The draft will be taken into consideration on the 1st April 1935 and any objection or suggestion received by the undersigned through the District Magistrate and the Divisional Commissioner before that date will be duly considered:—

Draft by-laws.

By-laws regarding prohibition and regulation of traffic under section 245 (a) and (b) of the Bengal Municipal Act, 1932.

Definition.

1. In these by-laws "cattle" means cattle as defined in section 3 of the Cattle Trespass Act, 1871 (I of 1871).

Penalties.

2. *Fines.*—The penalty for the infringement of any of these by-laws shall be—

(*a*) a fine not exceeding the sum stated at the foot of the by-law,

(*b*) in the case of a second or subsequent conviction for a similar offence a fine not exceeding the sum (if any) stated in that behalf at the foot of the by-law, and

(*c*) in the case of a continuing offence, a further fine not exceeding the sum (if any) stated at the foot of the by-law as the daily fine, which daily fine may be imposed for each day after written notice of the offence from the Commissioners.

Regulation of traffic on public streets.

3. *Youthful drivers.*—No owner of any carriage or cart shall allow it to be driven on any public street by a driver under fourteen years of age.

Fine, Rs. 10.

4. *Driving more than one carriage or cart.*—No driver shall drive or have in his charge on any public street more than one carriage or cart, except in the case of two carts the hinder one of which is severely fastened to the preceding cart.

Fine, Rs. 10.

5. *Standing vehicles.*—No person shall keep standing on any public street any vehicle, in such a manner as to cause inconvenience to the public, for any time longer than may reasonably be required for loading or unloading or for taking up or setting down passengers.

Fine, Rs. 10; on a second or subsequent conviction, Rs. 50.

6. *Charge of carriage or cart.*—No person shall leave any carriage or cart on any public street without a person in charge thereof.

Fine, Rs. 10; on a second or subsequent conviction, Rs. 50.

7. *Rule of the road.*—Any person driving a carriage or cart, or riding a bicycle, or driving or riding an animal, or carrying a palanquin, on any public street, shall keep to his left when he passes a vehicle coming from the opposite direction or when any vehicle overtakes him, and shall keep to his right when overtaking any vehicle.

Fine, Rs. 10.

8. *Lights.*—No person shall drive any of the undermentioned vehicles or animals, or convey any palanquin, on any public street, between half-an-hour after sunset and half-an-hour before sunrise, unless lights are provided as follows:—

(*a*) every carriage must carry two conspicuous lights, one on each side;
(*b*) every cart must carry one conspicuous light;
(*c*) every elephant, camel or palanquin must be accompanied by one conspicuous light;
(*d*) every cycle must carry one conspicuous light in front:

Provided that this by-law shall not apply on nights of full-moon or on the four nights before and after full-moon, if and when the moon is clearly visible.

Fine, Rs. 50.

9. *Signals on motors and cycles.*—No person shall drive any motor-car, or ride any motor-cycle or any tricycle or bicycle, on any public street unless it has attached to it a bell, horn or other suitable signal in good order.

Fine, Rs. 50.

10. *Maximum load for carts.*—No cart shall, without the general or special permission of the Commissioners, carry on any public street a load in excess of twenty maunds.

Fine, Rs. 10.

11. *Vehicles laden with girders, etc.*—No person shall drive upon a public street any vehicle laden with iron girders, rails, beams, bullas, bamboos, planks or other materials of a similar character which exceed twelve feet in length, unless the vehicle be accompanied by another person and be loaded in such a way that no portion of the said materials touches the ground.

Fine, Rs. 10.

12. *Vehicles laden with bricks, stones, etc.*—No person shall drive upon a public street any vehicle laden with bricks, stones or other materials of a similar character, unless such materials be so secured that they cannot fall on to the street.

Fine, Rs. 10.

13. *Animal laden with bamboos or timber.*—No person shall convey on any public street bamboos or timber placed on the back of any animal in such a way that any portion of such bamboos or timber touches the ground.

Fine, Rs. 10.

14. *Taking elephants or camels along a public street.*—No person shall, without the general or special permission of the Commissioners, take any elephant or camel along any public street.

Fine, Rs. 50.

15. *Taking an elephant over a bridge.*—No person shall allow any elephant in his charge to go over any bridge on any public street unless the bridge be constructed of arched masonry, steel or ferro-concrete or similar durable material.

Fine, Rs. 50.

16. *Loaded pack-animals.*—No person shall drive upon a public street, at the same time, more than two loaded pack-animals.

Fine, Rs. 10.

17. *Foals.*—No person riding or driving a mare on any public street shall allow a foal to accompany the mare unless it is secured.

Fine, Rs. 10.

18. *Driving cart in centre of a public street.*—No person shall drive a cart on the centre of any public street on which cart-tracks are provided.

Fine, Rs. 10.

19. *Sitting or sleeping.*—No person shall sit or sleep on any public street so as to obstruct traffic.

Fine, Rs. 10.

Regulation of traffic on foot-paths.

20. *Driving or riding on foot-paths.*—No person shall wilfully drive or ride any vehicle or cattle on any foot-path set apart for the use of foot-passengers.

Fine, Rs. 10.

Prevention of obstructions, encroachments or excavations on or near public streets, ghats or ferries.

21. *Abandoning or letting loose cattle.*—No person shall abandon or let loose or negligently allow to get loose any cattle on any public street.

Fine, Rs. 10.

22. *Children playing or wandering.*—No parent or guardian of any child below the age of seven years shall allow such child to play or wander about on any public street so as to obstruct traffic.

Fine, Rs. 10.

23. *Depositing articles.*—No person shall, without the general or special permission of the Commissioners, deposit any articles on any public street, except for a temporary purpose, or use any public street as a place for keeping any vehicle or cattle, or for washing any article, or for any other private purpose:

Provided that, during the months of April, May and June, between the hours of 10 p.m. and 5 a.m., khatias may be laid on the side of a public street in such a manner as not to cause obstruction or danger to persons using the public street.

Fine, Rs. 10.

24. *Planting trees.*—No person shall plant a tree on any public street without the general or special permission of the Commissioners.

Fine, Rs. 10.

25. *Excavations and enclosures.*—No person shall, without the general or special permission of the Commissioners, make any excavation on any public street or on or near any ghat or public ferry or enclose any such street or any part thereof.

Fine, Rs. 10; daily fine, Rs. 2.

26. *Removing turf or cutting grass.*—No person shall, without the general or special permission of the Commissioners, remove turf or cut grass from any public street or the slopes thereof.

Fine, Rs. 10.

27. *Discharge of water.*—No person shall affix or cause to be affixed to any building owned or occupied by him any gutter, spout or other thing intended for the conveyance and discharge of water, or shall leave in any such building any opening for the discharge of water, in such a way that the water discharged therefrom is thrown or falls upon a public street except through a downpipe or other suitable contrivance reaching to the level of the public street.

Fine, Rs. 10; daily fine, Rs. 2.

28. *Breaking in horses.*—No person shall break in horses on any public street not set apart for that purpose.

Fine, Rs. 10; on a second or subsequent conviction, Rs. 50.

29. *Flying kites.*—No person shall fly a kite on any public street or in such a way that it may fall on any public street.

Fine, Rs. 10.

30. *Playing games.*—No person shall play any game on any public street.

Fine, Rs. 10.

31. *Throwing stones or missiles.*—No person shall throw or discharge any stone or missile on or near any public street.

Fine, Rs. 10.

32. *Driving across a drain.*—No person shall drive any vehicle across a public drain in or near any public street so as to cause damage to such drain.

Fine, Rs. 10.

33. *Barbed wire.*—No owner or occupier of land abutting on any public street shall fence such land with barbed wire.

Fine, Rs. 10; daily fine, Rs. 2.

34. *Dust-bins.*—No person shall—

(*a*) place any burning material in any municipal dust-bin on or near a public street, or

(*b*) burn in any such dust-bin any paper, leaves, grass, wood or other material.

Fine, Rs. 10.

35. *Closed public street.*—No person shall take or drive any motor vehicle, carriage or cart on a public street or part of a street which is closed by order of the Commissioners to all or any specified description of wheeled traffic or displace any barrier or fence or notice erected for the purpose of closing such public street or part thereof.

Fine, Rs. 10.

Regulation of the use or occupation of public streets or places for sale of articles, etc., and provision for the levy of fees for such use or occupation.

36. *Exposing articles for sale.*—Without the general or special permission of the Commissioners which may, if they so direct, be subject to the payment of fees according to a scale prescribed by them at a meeting, no person shall use or occupy any public street or any other public place for the sale of any article or for the exercise of any calling or for setting up any booth or stall.

Fine, Rs. 10; on a second or subsequent conviction, Rs. 50.

Nadia.—No. 303M.—17th January 1935.—The following draft of a set of by-laws, which has been framed by the Commissioners of the Kushtia Municipality, in the district of Nadia, under section 245 (*a*) and (*b*) of the Bengal Municipal Act, 1932 (Bengal Act XV of 1932), and which the Government of Bengal (Ministry of Local Self-Government) propose to confirm under section 506 of the Act, is published for the information of persons likely to be affected thereby.

2. The draft will be taken into consideration on the 1st April 1935, and any objection or suggestion received by the undersigned through the District Magistrate and the Divisional Commissioner before that date will be duly considered :—

Draft by-laws.

By-laws regarding prohibition and regulation of traffic under section 245 (a) and (b) of the Bengal Municipal Act, 1932, for Kushtia Municipality.

Definition.

1. In these by-laws "cattle" means cattle as defined in section 3 of the Cattle Trespass Act, 1871 (I of 1871).

Penalties.

2. *Fines.*—The penalty for the infringement of any of these by-laws shall be—

(*a*) a fine not exceeding the sum stated at the foot of the by-law,

(*b*) in the case of a second or subsequent conviction for a similar offence a fine not exceeding the sum (if any) stated in that behalf at the foot of the by-law, and

(*c*) in the case of a continuing offence, a further fine not exceeding the sum (if any) stated at the foot of the by-law as the daily fine, which daily fine may be imposed for each day after written notice of the offence from the Commissioners.

Regulation of traffic on public streets.

3. *Youthful drivers.*—No owner of any carriage or cart shall allow it to be driven on any public street by a driver under fourteen years of age.

Fine, Rs. 10.

4. *Driving more than one carriage or cart.*—No driver shall drive or have in his charge on any public street more than one carriage or cart, except in the case of two carts the hinder one of which is severely fastened to the preceding cart.

Fine, Rs. 10.

5. *Standing vehicles.*—No person shall keep standing on any public street any vehicle, in such a manner as to cause inconvenience to the public, for any time longer than may reasonably be required for loading or unloading or for taking up or setting down passengers.

Fine, Rs. 10; on a second or subsequent conviction, Rs. 50.

6. *Charge of carriage or cart.*—No person shall leave any carriage or cart on any public street without a person in charge thereof.

Fine, Rs. 10; on a second or subsequent conviction, Rs. 50.

7. *Rule of the road.*—Any person driving a carriage or cart, or riding a bicycle, or driving or riding an animal, or carrying a palanquin, on any public street, shall keep to his left when he passes a vehicle coming from the opposite direction or when any vehicle overtakes him, and shall keep to his right when overtaking any vehicle.

Fine, Rs. 10.

8. *Lights.*—No person shall drive any of the undermentioned vehicles or animals, or convey any palanquin, on any public street, between half-an-hour after sunset and half-an-hour before sunrise, unless lights are provided as follows:—

(*a*) every carriage must carry two conspicuous lights, one on each side;

(*b*) every cart must carry one conspicuous light;

(*c*) every elephant, camel or palanquin must be accompanied by one conspicuous light;

(*d*) every cycle must carry one conspicuous light in front:

Provided that this by-law shall not apply on nights of full-moon or on the four nights before and after full-moon, if and when the moon is clearly visible.

Fine, Rs. 50.

9. *Signals on motors and cycles.*—No person shall drive any motor-car, or ride any motor-cycle or any tricycle or bicycle, on any public street unless it has attached to it a bell, horn or other suitable signal in good order.

Fine, Rs. 50.

10. *Maximum load for carts.*—No cart shall, without the general or special permission of the Commissioners, carry on any public street a load in excess of twenty maunds.

Fine, Rs. 10.

11. *Vehicles laden with girders, etc.*—No person shall drive upon a public street any vehicle laden with iron girders, rails, beams, bullas, bamboos, planks or other materials of a similar character which exceed twelve feet in length, unless the vehicle be accompanied by another person and be loaded in such a way that no portion of the said materials touches the ground.

Fine, Rs. 10.

12. *Vehicles laden with bricks, stones, etc.*—No person shall drive upon a public street any vehicle laden with bricks, stones or other materials of a similar character, unless such materials be so secured that they cannot fall on to the street.

Fine, Rs. 10.

13. *Animal laden with bamboos or timber.*—No person shall convey on any public street bamboos or timber placed on the back of any animal in such a way that any portion of such bamboos or timber touches the ground.

Fine, Rs. 10.

14. *Taking elephants or camels along a public street.*—No person shall, without the general or special permission of the Commissioners, take any elephant or camel along any public street.

Fine, Rs. 50.

15. *Taking an elephant over a bridge.*—No person shall allow any elephant in his charge to go over any bridge on any public street unless the bridge be constructed of arched masonry, steel or ferro-concrete or similar durable material.

Fine, Rs. 50.

16. *Loaded pack-animals.*—No person shall drive upon a public street, at the same time, more than two loaded pack-animals.

Fine, Rs. 10.

17. *Foals.*—No person riding or driving a mare on any public street shall allow a foal to accompany the mare unless it is secured.

Fine, Rs. 10.

18. *Driving cart in centre of a public street.*—No person shall drive a cart on the centre of any public street on which cart-tracks are provided.

Fine, Rs. 10.

19. *Sitting or sleeping.*—No person shall sit or sleep on any public street so as to obstruct traffic.

Fine, Rs. 10.

Regulation of traffic on foot-paths.

20. *Driving or riding on foot-paths.*—No person shall wilfully drive or ride any vehicle or cattle on any foot-path set apart for the use of foot-passengers.

Fine, Rs. 10.

Prevention of obstructions, encroachments or excavations on or near public streets, ghats or ferries.

21. *Abandoning or letting loose cattle.*—No person shall abandon or let loose or negligently allow to get loose any cattle on any public street.

Fine, Rs. 10.

22. *Children playing or wandering.*—No parent or guardian of any child below the age of seven years shall allow such child to play or wander about on any public street so as to obstruct traffic.

Fine, Rs. 10.

23. *Depositing articles.*—No person shall, without the general or special permission of the Commissioners, deposit any articles on any public street, except for a temporary purpose, or use any public street as a place for keeping any vehicle or cattle, or for washing any article, or for any other private purpose:

Provided that, during the months of April, May and June, between the hours of 10 p.m. and 5 a.m., khatias may be laid on the side of a public street in such a manner as not to cause obstruction or danger to persons using the public street.

Fine, Rs. 10.

24. *Planting trees.*—No person shall plant a tree on any public street without the general or special permission of the Commissioners.

Fine, Rs. 10.

25. *Excavations and enclosures.*—No person shall, without the general or special permission of the Commissioners, make any excavation on any public street or on or near any ghat or public ferry or enclose any such street or any part thereof.

Fine, Rs. 10; daily fine, Rs. 2.

26. *Removing turf or cutting grass.*—No person shall, without the general or special permission of the Commissioners, remove turf or cut grass from any public street or the slopes thereof.

Fine, Rs. 10.

27. *Discharge of water.*—No person shall affix or cause to be affixed to any building owned or occupied by him any gutter, spout or other thing intended for the conveyance and discharge of water, or shall leave in any such building any opening for the discharge of water, in such a way that the water discharged therefrom is thrown or falls upon a public street except through a downpipe or other suitable contrivance reaching to the level of the public street.

Fine, Rs. 10; daily fine, Rs. 2.

28. *Breaking in horses.*—No person shall break in horses on any public street not set apart for that purpose.

Fine, Rs. 10; on a second or subsequent conviction, Rs. 50.

29. *Flying kites.*—No person shall fly a kite on any public street or in such a way that it may fall on any public street.

Fine, Rs. 10.

30. *Playing games.*—No person shall play any game on any public street.

Fine, Rs. 10.

31. *Throwing stones or missiles.*—No person shall throw or discharge any stone or missile on or near any public street.

Fine, Rs. 10.

32. *Driving across a drain.*—No person shall drive any vehicle across a public drain in or near any public street so as to cause damage to such drain.

Fine, Rs. 10.

33. *Barbed wire.*—No owner or occupier of land abutting on any public street shall fence such land with barbed wire.

Fine, Rs. 10; daily fine, Rs. 2.

34. *Dust-bins.*—No person shall—

(*a*) place any burning material in any municipal dust-bin on or near a public street, or

(*b*) burn in any such dust-bin any paper, leaves, grass, wood or other material.

Fine, Rs. 10.

35. *Closed public street.*—No person shall take or drive any motor vehicle, carriage or cart on a public street or part of a street which is closed by order of the Commissioners to all or any specified description of wheeled traffic or displace any barrier or fence or notice erected for the purpose of closing such public street or part thereof.

Fine, Rs. 10.

Regulation of the use or occupation of public streets or places for sale of articles, etc., and provision for the levy of fees for such use or occupation.

36. *Exposing articles for sale.*—Without the general or special permission of the Commissioners which may, if they so direct, be subject to the payment of fees according to a scale prescribed by them at a meeting, no person shall use or occupy any public street or any other public place for the sale of any article or for the exercise of any calling or for setting up any booth or stall.

Fine, Rs. 10; on a second or subsequent conviction, Rs. 50.

Faridpur. — No. 305M. — 17th January 1935.—The following draft of a set of by-laws, which has been framed by the Commissioners of the Rajbari Municipality, in the district of Faridpur, under section 355 of the Bengal Municipal Act, 1932 (Bengal Act XV of 1932), and which the Government of Bengal (Ministry of Local Self-Government) propose to confirm under section 506 of the Act, is published for the information of persons likely to be affected thereby.

2. The draft will be taken into consideration on the 1st April 1935, and any objection or suggestion received by the undersigned through the District Magistrate and the Divisional Commissioner before that date will be duly considered:—

Draft by-laws.

By-laws regulating the use of, and prevention of nuisance in regard to, public water-supply, bathing and washing places, streams, channels, tanks and wells.

Definition.

1. In these by-laws the word "channel" shall include "*nala*," "river," "stream," "ditch," or "watercourse."

Penalty.

2. *Fines.*—The penalty for the infringement of any of these by-laws shall be—

(*a*) a fine not exceeding the sum stated at the foot of the by-law,

(*b*) in the case of a second or subsequent conviction for a similar offence, a fine not exceeding the sum (if any) stated in that behalf at the foot of the by-law, and

(*c*) in the case of a continuing offence, a further fine not exceeding the sum (if any) stated at the foot of the by-law as the daily fine, which daily fine may be imposed for each day after written notice of the offence from the Commissioners.

3. *Setting up obstruction.*—No person shall, without the general or special permission of the Commissioners, set up any obstruction in any channel which is a source of public water-supply.

Explanation.—The spreading of fishing-nets and the placing of fishing-traps in any such channel are included in the word "obstruction" as used in this by-law.

Fine, Rs. 10; daily fine, Rs. 2.

4. *Easing oneself.*—No person shall ease himself at the side of or into any channel.

Fine, Rs. 10.

5. *Throwing rubbish, sewage or offensive matter.*—No person shall throw, deposit or discharge any rubbish, sewage or offensive matter into any channel tank or well.

Fine, Rs. 10; on a second or subsequent conviction, Rs. 50.

6. *Cleanliness of banks, and access for conservancy.*—Every owner or occupier of any part of the bank of any channel which is a source of public water-supply shall—

(*a*) keep such bank free from filth, dense vegetation and other obstruction, and

(*b*) at all times allow the Commissioners, or any of their servants duly authorized in this behalf, to have access to such channel for any purpose of public conservancy.

Fine, Rs. 10.

7. *Weeds.*—Any person taking weeds from a channel or tank shall completely remove them from the slope and crest of such channel or tank within three days.

Fine, Rs. 10; daily fine, Rs. 2.

8. *Masonry platforms and drains for wells.*—The owner of every well which is a source of public water-supply shall construct a masonry platform and drains to prevent the surface water falling into the well or stagnating in its vicinity.

Fine, Rs. 10; daily fine, Rs. 2.

9. *Bathing or washing near well or standpipe.*—No person shall bathe, or shall wash clothes, utensils or any other article, within a distance of ten feet from the lowest platform of any well, pump, standpipe or hydrant.

Fine, Rs. 10.

10. *Use of standpipes and fountains.*—Except with the general or special permission of the Commissioners and under such conditions as they may from time to time prescribe, no person shall use any standpipe, pump, hydrant or fountain belonging to the Commissioners for any purpose other than drawing water—

(*a*) for drinking on the spot, or

(*b*) for carrying away for domestic purposes.

Fine, Rs. 10.

11. No person shall put his mouth to any tap or cock attached to any standpipe or hydrant used by the public; nor shall any person put any standpipe or hydrant to any use which results in waste to the water-supply.

Fine, Rs. 10.

12. No person shall cause damage to any hydrant, standpipe, pump, fountain, water-tap or cock belonging to the Commissioners or tamper with any of their property connected with the waterworks in such a manner as to affect the use of public water-supply.

Fine Rs. 20.

13. No person suffering from leprosy or any other contagious disease shall touch or draw water from any standpipe used by the public.

Fine, Rs. 20.

14. *Steeping jute, hemp, etc.*—No person shall, without the general or special permission of the Commissioners, steep in any tank or channel any jute, hemp, bamboos, bamboo-piles, canes, planks and wood or other vegetable matter which is likely to render the water offensive or noxious to the neighbourhood.

Fine, Rs. 10; on a second or subsequent conviction, Rs. 50.

15. *Washing infected articles.*—No person shall wash or cause to be washed in or near any tank or channel or any other receptacle for water used by the public for drinking or bathing purposes any clothes, bedding or other articles which have been used by a person suffering from any infectious or contagious disease.

Fine, Rs. 50.

16. *Bathing by infected persons.*—No person suffering from any infectious or contagious disease shall bathe in any public bathing place.

Fine, Rs. 10.

17. *Bathing places reserved for females.*—No male person above twelve years of age shall stand on or near, or bathe or wash in, any bathing place which has been reserved by the Commissioners at a meeting for the use of females only.

Fine, Rs. 10.

18. *Cattle troughs.*—No person shall use for any other purpose any drinking trough which has been reserved by the Commissioners for watering cattle.

Murshidabad. — No. 322M.—17th January 1935.—In exercise of the power conferred by section 216 of the Bengal Municipal Act, 1932 (Bengal Act XV of 1932), and on the application of the Commissioners of the Kandi Municipality at a meeting, the Government of Bengal (Ministry of Local Self-Government) are pleased to extend the provisions of sections 217-220 and 223-229 of that Act to the said municipality.

Calcutta.—No. 324M.—17th January 1935. —The following draft of rules, which, in exercise of the powers conferred by sub-section (*1*) and clauses (*c*), (*d*), (*e*) and (*f*) of sub-section (*2*) of section 123G of the Calcutta Municipal Act, 1923 (Bengal Act III of 1923), the Government of Bengal (Ministry of Local Self-Government), proposed to make, is published for the information of persons likely to be affected thereby.

2. The draft will be taken into consideration on or after the 15th March 1935, and any objection or suggestion with respect thereto received by the undersigned before that date will be duly considered:—

Draft Rules regarding audit of accounts of the Calcutta Corporation.

1. The monthly accounts of the Corporation shall be completed and submitted by the Executive Officer to the auditors not later than the twenty-second day of the succeeding month.

2. Intermediate references and enquiries from the auditors shall be replied to by the Corporation or by the officers of the Corporation concerned within a fortnight of their receipt in the office of the Corporation.

3. Annual accounts of the Corporation for each financial year shall be completed and submitted by the Executive Officer to the auditors not later than the first day of October in the next financial year.

4. The auditors' report on the annual accounts of the Corporation shall be presented by the auditors to the Local Government as well as to the Corporation not later than the 15th day of January following the date of submission of annual accounts mentioned in rule 3.

5. The Corporation shall submit to the Local Government not later than the 15th day of September next after the date mentioned in rule 4 for the submission of the auditors' report to the Local Government, a report showing in parallel columns each item of the auditors' report on the annual accounts of the Corporation and the replies of the Corporation thereto. A copy of the report shall at the same time be forwarded to the auditors.

6. When there is a difference of opinion on any point between the Corporation and the auditors, or if the Corporation do not remedy any defect or irregularity within a period considered by the auditors to be reasonable, the matter together with the explanation of the Corporation, if any, shall be referred by the auditors to the Local Government for orders not later than the 15th day of November following the date mentioned in rule 5.

7. (*1*) The auditors' report on the annual accounts of the Corporation, together with the replies of the Corporation, on each item thereof, as well as the report, if any, of the auditors, submitted to the Local Government under rule 6, and the final orders of the Local Government thereon, shall be published by the Corporation not later than the 31st day

of March next after the date mentioned in rule 6, in the form of a statement under the following heads:—

1	2	3	4
Auditors' report.	Replies of the Corporation.	Audit rejoinder.	Final orders of Government.

The publication shall be made in the *Calcutta Gazette* as well as in at least two local newspapers.

(2) If the Corporation fail to publish the auditors' report with the orders of Government thereon in the manner specified in sub-rule (1), the publication shall be made by the Local Government in such manner as it may consider suitable.

8. The publication shall be offered for sale to the public at the municipal office, during office hours, at a price of one anna per folio of sixteen foolscap pages.

24-Parganas.—No. 337M.—18th January 1935.—The following draft of a set of by-laws, which has been framed by the Commissioners of the Dum Dum Municipality, in the district of 24-Parganas, under section 417 of the Bengal Municipal Act, 1932 (Bengal Act XV of 1932), and which the Government of Bengal (Ministry of Local Self-Government) propose to confirm under section 506 of the Act, is published for the information of persons likely to be affected thereby.

2. The draft will be taken into consideration on the 1st April 1935, and any objection or suggestion received by the undersigned through the District Magistrate and the Divisional Commissioner before that date will be duly considered:—

Draft by-laws.

By-laws regarding standardization of weights and measures (section 417 of the Bengal Municipal Act, 1932).

1. In these by-laws the word "vendor" includes a shop-keeper, stall-holder, squatter or other salesman in any market or in any other place within the municipality.

2. All vendors within the municipality shall use—

(*i*) Government standard weights, that is to say, a *maund* consisting of forty *seers*, a *seer* consisting of eighty *tolas* and a *tola* consisting of one hundred and eighty *grains;* and

(*ii*) a standard cubit consisting of eighteen inches for the measure of commodities other than land.

3. The commissioners shall require the superintendents of the municipal markets or any other officers duly authorised by them in that behalf, and may require the owner, manager or other person in charge of a private market to keep in their custody standards of weights and measures conforming with the standard prescribed in by-law 2 for the purpose of verifying the weights and measures used by any vendor for the sale of articles in any market or in any other place. Such superintendents or other officers duly authorized by the commissioners shall keep in their custody a die for the purpose of stamping weights and measures, which have been duly verified in the manner provided in by-law 4.

4. The superintendent of a municipal market or any other officer duly authorized by the commissioners in that behalf, shall, not less than once in every three months, test and verify the weights and measures used by each vendor in every market or other place by comparison with the aforesaid standards and shall also similarly test and verify every weight or measure that may be brought to him by any person at his office for the purpose of verification; and if, in either case, he finds the same to be correct, shall stamp it with the die mentioned in by-law 3 by way of verification on payment of such fee, *not exceeding annas four* in each case as the commissnoners may from time to time direct:

Provided that weights and measures once stamped shall not be stamped with the die a second time unless the stamp has become faint or obliterated.

24-Parganas.—No. 339M.—18th January 1935.—The following draft of a set of by-laws, which has been framed by the Commissioners of the North Dum Dum Municipality, in the district of 24-Parganas, under section 245 (*a*) and (*b*) of the Bengal Municipal Act, 1932 (Bengal Act XV of 1932), and which the Government of Bengal (Ministry of Local Self-Government) propose to confirm under section 506 of the Act, is published for the information of persons likely to be affected thereby.

2. The draft will be taken into consideration on the 1st April 1935, and any objection or suggestion received by the undersigned through the District Magistrate and the Divisional Commissioner before that date will be duly considered:—

Draft by-laws.

By-laws regarding prohibition and regulation of traffic under section 245 (a) and (b) of the Bengal Municipal Act, 1932.

Definition.

1. In these by-laws "cattle" means cattle as defined in section 3 of the Cattle Trespass Act, 1871 (I of 1871).

Penalties.

2. *Fines.*—The penalty for the infringement of any of these by-laws shall be—

(*a*) a fine not exceeding the sum stated at the foot of the by-law,

(*b*) in the case of a second or subsequent conviction for a similar offence a fine not exceeding the sum (if any) stated in that behalf at the foot of the by-law, and

(*c*) in the case of a continuing offence, a further fine, not exceeding the sum (if any) stated at the foot of the by-law as the daily fine, which daily fine may be imposed for each day after written notice of the offence from the commissioners.

Regulation of traffic on public streets.

3. *Youthful drivers.*—No owner of any carriage or cart shall allow it to be driven on any public street by a driver under fourteen years of age.

Fine, Rs. 10.

4. *Driving more than one carriage or cart.*—No driver shall drive or have in his charge on any public street more than one carriage or cart, except in the case of two carts, the hinder one of which is severely fastened to the preceding cart.

Fine, Rs. 10.

5. *Standing vehicles.*—No person shall keep standing on any public street any vehicle, in such a manner as to cause inconvenience to the public, for any time longer than may reasonably be required for loading or unloading or for taking up or setting down passengers.

Fine, Rs. 10; on a second or subsequent conviction, Rs. 50.

6. *Charge of carriage or cart.*—No person shall leave any carriage or cart on any public street without a person in charge thereof.

Fine, Rs. 10; on a second or subsequent conviction, Rs. 50.

7. *Rule of the road.*—Any person driving a carriage or cart, or riding a bicycle, or driving or riding an animal, or carrying a palanquin, on any public street, shall keep to his left when he passes a vehicle coming from the opposite direction or when any vehicle overtakes him, and shall keep to his right when overtaking any vehicle.

Fine, Rs. 10.

8. *Lights.*—No person shall drive any of the undermentioned vehicles or animals, or convey any palanquin, on any public street, between half-an-hour after sunset and half-an-hour before sunrise, unless lights are provided as follows:—

(*a*) every carriage must carry two conspicuous lights, one on each side;

(*b*) every cart must carry one conspicuous light;

(*c*) every elephant, camel or palanquin must be accompanied by one conspicuous light;

(*d*) every cycle must carry one conspicuous light in front.

Provided that this by-law shall not apply on nights of full-moon or on the four nights before and after full-moon, if and when the moon is clearly visible.

Fine, Rs. 50.

9. *Signals on motors and cycles.*—No person shall drive any motor-car, or ride any motor-cycle or any tricycle or bicycle, on any public street unless it has attached to it a bell, horn or other suitable signal in good order.

Fine, Rs. 50.

10. *Maximum load for carts.*—No cart shall, without the general or special permission of the Commissioners, carry on any public street a load in excess of twenty maunds.

Fine, Rs. 10.

11. *Vehicles laden with girders, etc.*—No person shall drive upon a public street any vehicle laden with iron girders, rails, beams, bullas, bamboos, planks or other materials of a similar character which exceed twelve feet in length, unless the vehicle be accompanied by another person and be loaded in such a way that no portion of the said materials touches the ground.

Fine, Rs. 10.

12. *Vehicles laden with bricks, stones, etc.*—No person shall drive upon a public street any vehicle laden with bricks, stones or other materials of a similar character, unless such materials be so secured that they cannot fall on to the street.

Fine, Rs. 10.

13. *Animal laden with bamboos or timber.*—No person shall convey on any public street bamboos or timber placed on the back of any animal in such a way that any portion of such bamboos or timber touches the ground.

Fine, Rs. 10.

14. *Taking elephants or camels along a public street.*—No person shall, without the general or special permission of the Commissioners, take any elephant or camel along any public street.

Fine, Rs. 50.

15. *Taking an elephant over a bridge.*—No person shall allow any elephant in his charge to go over any bridge on any public street unless the bridge be constructed of arched masonry, steel or ferro-concrete or similar durable material.

Fine, Rs. 50.

16. *Loaded pack-animals.*—No person shall drive upon a public street, at the same time, more than two loaded pack-animals.

Fine, Rs. 10.

17. *Foals.*—No person riding or driving a mare on any public street shall allow a foal to accompany the mare unless it is secured.

Fine, Rs. 10.

18. *Driving cart in centre of a public street.*—No person shall drive a cart on the centre of any public street on which cart-tracks are provided.

Fine, Rs. 10.

19. *Sitting or sleeping.*—No person shall sit or sleep on any public street so as to obstruct traffic.

Fine, Rs. 10.

Regulation of traffic on foot-paths.

20. *Driving or riding on foot-path.*—No person shall wilfully drive or ride any vehicle or cattle on any foot-path set apart for the use of foot-passengers.

Fine, Rs. 10.

Prevention of obstructions, encroachments or excavations on or near public streets, ghats or ferries.

21. *Abandoning or letting loose cattle.*—No person shall abandon or let loose or negligently allow to get loose, any cattle, on any public street.

Fine, Rs. 10.

22. *Children playing or wandering.*—No parent or guardian of any child below the age of seven years shall allow such child to play or wander about on any public street so as to obstruct traffic.

Fine, Rs. 10.

23. *Depositing articles.*—No person shall, without the general or special permission of the Commissioners, deposit any articles on any public street, except for a temporary purpose, or use any public street as a place for keeping any vehicle or cattle, or for washing any article, or for any other private purpose:

Provided that, during the months of April, May and June, between the hours of 10 p.m. and 5 a.m., khatias may be laid on the side of a public street in such a manner as not to cause obstruction or danger to persons using the public street.

Fine, Rs. 10.

24. *Planting trees.*—No person shall plant a tree on any public street without the general or special permission of the Commissioners.

Fine, Rs. 10.

25. *Excavations and enclosures.*—No person shall, without the general or special permission of the Commissioners, make any excavation on any public street or on or near any ghat or public ferry or enclose any such street or any part thereof.

Fine, Rs. 10; daily fine Rs. 2.

26. *Removing turf or cutting grass.*—No person shall, without the general or special permission of the Commissioners, remove turf or cut grass from any public street or the slopes thereof.

Fine, Rs. 10.

27. *Discharge of water.*—No person shall affix or cause to be affixed to any building owned or occupied by him any gutter, spout or other thing intended for the conveyance and discharge of water, or shall leave in any such building any opening for the discharge of water, in such a way that the water discharged therefrom is thrown or falls upon a public street except through a downpipe or other suitable contrivance reaching to the level of the public street.

Fine, Rs. 10; daily fine Rs. 2.

28. *Breaking in horses.*—No person shall break in horses on any public street not set apart for that purpose.

Fine, Rs. 10; on a second or subsequent conviction, Rs. 50.

29. *Flying kites.*—No person shall fly a kite on any public street or in such a way that it may fall on any public street.

Fine, Rs. 10.

30. *Playing games.*—No person shall play any game on any public street.

Fine, Rs. 10.

31. *Throwing stones or missiles.*—No person shall throw or discharge any stone or missile on or near any public street.

Fine, Rs. 10.

32. *Driving across a drain.*—No person shall drive any vehicle across a public drain in or near any public street so as to cause damage to such drain.

Fine, Rs. 10.

33. *Barbed wire.*—No owner or occupier of land abutting on any public street shall fence such land with barbed wire.

Fine, Rs. 10; daily fine Rs. 2.

34. *Dust-bins.*—No person shall—

(*a*) place any burning material in any municipal dust-bin on or near a public street, or

(*b*) burn in any such dust-bin any paper, leaves, grass, wood or other material.

Fine, Rs. 10.

35. *Closed public street.*—No person shall take or drive any motor vehicle, carriage or cart on a public street or part of a street which is closed by order of the Commissioners to all or any specified description of wheeled traffic or displace any barrier or fence or notice erected for the purpose of closing such public street or part thereof.

Fine, Rs. 10.

Regulation of the use or occupation of public streets or places for sale of articles, etc., and provision for the levy of fees for such use or occupation.

36. *Exposing articles for sale.*—Without the general or special permission of the Commissioners which may, if they so direct, be subject to the payment of fees according to a scale prescribed by them at a meeting, no person shall use or occupy any public street or any other public place, for the sale of any article or for the exercise of any calling or for setting up any booth or stall.

Fine, Rs. 10; on a second or subsequent conviction, Rs. 50.

24-Parganas. — No. 341M.—18th January 1935.—The following draft of a set of by-laws, which has been framed by the Commissioners of the Dum Dum Municipality, in the district of 24-Parganas, under section 355 of the Bengal Municipal Act, 1932 (Bengal Act XV of 1932), and which the Government of Bengal (Ministry of Local Self-Government) propose to confirm under section 506 of the Act, is published for the information of persons likely to be affected thereby.

2. The draft will be taken into consideration on the 1st April 1935, and any objection or suggestion received by the undersigned through the District Magistrate and the Divisional Commissioner before that date will be duly considered:—

Draft by-laws.

By-laws regulating the use of, and prevention of nuisance in regard to, public water-supply, bathing and washing places, streams, channels, tanks and wells.

Definition.

1. In these by-laws the word "channel" shall include "*nala*," "river," "stream," 'ditch," or "watercourse."

Penalty.

2. *Fines.*—The penalty for the infringement of any of these by-laws shall be—

(*a*) a fine not exceeding the sum stated at the foot of the by-law.

(*b*) in the case of a second or subsequent conviction for a similar offence, a fine not exceeding the sum (if any) stated in that behalf at the foot of the by-law, and

(*c*) in the case of a continuing offence, a further fine not exceeding the sum (if any) stated at the foot of the by-law as the daily fine, which daily fine may be imposed for each day after written notice of the offence from the Commissioners.

3. *Setting up obstruction.*—No person shall, without the general or special permission of the Commissioners, set up any obstruction in any channel which is a source of public water-supply.

Explanation.—The spreading of fishing-nets and the placing of fishing-traps in any such channel are included in the word "obstruction" as used in this by-law.

Fine, Rs. 10; daily fine, Rs. 2.

4. *Easing oneself.*—No person shall ease himself at the side of or into any channel.

Fine, Rs. 10.

5. *Throwing rubbish, sewage or offensive matter.*—No person shall throw, deposit or discharge any rubbish, sewage or offensive matter into any channel, tank or well.

Fine, Rs. 10; on a second or subsequent conviction, Rs. 50

6. *Cleanliness of banks, and access for conservancy.*—Every owner or occupier of any part of the bank of any channel which is a source of public water-supply shall—

(*a*) keep such bank free from filth, dense vegetation and other obstruction, and

(*b*) at all times allow the Commissioners, or any of their servants duly authorized in this behalf, to have access to such channel for any purpose of public conservancy.

Fine, Rs. 10.

7. *Weeds.*—Any person taking weeds from a channel or tank shall completely remove them from the slope and crest of such channel or tank within three days.

Fine, Rs. 10; daily fine, Rs. 2.

8. *Masonry platforms and drains for wells.*—The owner of every well which is a source of public water-supply shall construct a masonry platform and drains to prevent the surface water falling into the well or stagnating in its vicinity.

Fine, Rs. 10; daily fine, Rs. 2.

9. *Bathing or washing near well or standpipe.*—No person shall bathe, or shall wash clothes, utensils or any other article, within a distance of ten feet from the lowest platform of any well, pump, standpipe or hydrant.

Fine, Rs. 10.

10. *Use of standpipes and fountains.*—Except with the general or special permission of the Commissioners and under such conditions as they may from time to time prescribe, no person shall use any standpipe, pump, hydrant or fountain belonging to the Commissioners for any purpose other than drawing water—

(*a*) for drinking on the spot, or

(*b*) for carrying away for domestic purposes.

Fine, Rs. 10.

11. No person shall put his mouth to any tap or cock attached to any standpipe or hydrant used by the public.

Fine, Rs. 10.

12. No person shall cause damage to any hydrant, standpipe, pump, fountain, water-tap or cock belonging to the Commissioners or tamper with any of their property connected with the waterworks in such a manner as to affect the use of public water-supply.

Fine, Rs. 20.

13. No person suffering from leprosy or any other contagious disease shall touch or draw water from any standpipe used by the public.

Fine, Rs. 20.

14. *Steeping jute, hemp, etc.*—No person shall, without the general or special permission of the Commissioners, steep in any tank or channel any jute, hemp or other vegetable matter which is likely to render the water offensive or noxious to the neighbourhood.

Fine, Rs. 10; on a second or subsequent conviction, Rs. 50.

15. *Washing infected articles.*—No person shall wash or cause to be washed in or near any tank or channel or any other receptacle for water used by the public for drinking or bathing purposes any clothes, bedding or other articles which have been used by a person suffering from any infectious or contagious disease.

Fine, Rs. 50.

16. *Bathing by infected persons.*—No person suffering from any infectious or contagious disease shall bathe in any public bathing place.

Fine, Rs. 10.

17. *Bathing places reserved for females.*—No male person above twelve years of age shall stand on or near, or bathe or wash in, any bathing place which has been reserved by the Commissioners at a meeting for the use of females only.

Fine, Rs. 10.

18. *Cattle troughs.*—No person shall use for any other purpose any drinking trough which has been reserved by the Commissioners for watering cattle.

Jalpaiguri.—No. 343M.—18th January 1935.—The following draft of a set of by-laws, which has been framed by the Commissioners of the Jalpaiguri Municipality, in the district of Jalpaiguri, under section 245 (*a*) and (*b*) of the Bengal Municipal Act, 1932 (Bengal Act XV of 1932), and which the Government of Bengal (Ministry of Local Self-Government) propose to confirm under section 506 of the Act, is published for the information of persons likely to be affected thereby.

2. The draft will be taken into consideration on the 1st April 1935 and any objection or suggestion received by the undersigned through the District Magistrate and the Divisional Commissioner before that date will be duly considered:—

Draft by-laws.

By-laws regarding prohibition and regulation of traffic under Section 245 (a) and (b) of the Bengal Municipal Act, 1932.

Definition.

1. In these by-laws "cattle" means cattle as defined in section 3 of the Cattle Trespass Act, 1871 (I of 1871).

Penalties.

2. *Fines.*—The penalty for the infringement of any of these by-laws shall be—

(*a*) a fine not exceeding the sum stated at the foot of the by-law,

(*b*) in the case of a second or subsequent conviction for a similar offence a fine not exceeding the sum (if any) stated in that behalf at the foot of the by-law, and

(*c*) in the case of a continuing offence, a further fine, not exceeding the sum (if any) stated at the foot of the by-law as the daily fine, which daily fine may be imposed for each day after written notice of the offence from the commissioners.

Regulation of traffic on public streets.

3. *Youthful drivers.*—No owner of any carriage or cart shall allow it to be driven on any public street by a driver under fourteen years of age.

Fine, Rs. 10.

4. *Driving more than one carriage or cart.*—No driver shall drive or have in his charge on any public street more than one carriage or cart, except in the case of two carts, the hinder one of which is severely fastened to the preceding cart.

Fine, Rs. 10.

5. *Standing vehicles.*—No person shall keep standing on any public street any vehicle, in such a manner as to cause inconvenience to the public, for any time longer than may reasonably be required for loading or unloading or for taking up or setting down passengers.

Fine, Rs. 10; on a second or subsequent conviction, Rs. 50.

6. *Charge of carriage or cart.*—No person shall leave any carriage or cart on any public street without a person in charge thereof.

Fine, Rs. 10; on a second or subsequent conviction, Rs. 50.

7. *Rule of the road.*—Any person driving a carriage or cart, or riding a bicycle, or driving or riding an animal, or carrying a palanquin, on any public street, shall keep to his left when he passes a vehicle coming from the opposite direction or when any vehicle overtakes him, and shall keep to his right when overtaking any vehicle.

Fine, Rs. 10.

8. *Lights.*—No person shall drive any of the undermentioned vehicles or animals, or convey any palanquin, on any public street, between half-an-hour after sunset and half-an-hour before sunrise, unless lights are provided as follows:—

(*a*) every carriage must carry two conspicuous lights, one on each side;

(*b*) every cart must carry one conspicuous light;

(*c*) every elephant, camel or palanquin must be accompanied by one conspicuous light;

(*d*) every cycle must carry one conspicuous light in front.

Provided that this by-law shall not apply on nights of full-moon or on the four nights before and after full-moon, if and when the moon is clearly visible.

Fine, Rs. 50.

9. *Signals on motors and cycles.*—No person shall drive any motor-car, or ride any motor-cycle or any tricycle or bicycle, on any public street unless it has attached to it a bell, horn or other suitable signal in good order.

Fine, Rs. 50.

10. *Maximum load for carts.*—No cart shall, without the general or special permission of the commissioners, carry on any public street a load in excess of twenty maunds.

Fine, Rs. 10.

11. *Vehicles laden with girders, etc.*—No person shall drive upon a public street any vehicle laden with iron girders, rails, beams, bullas, bamboos, planks or other materials of a similar character which exceed twelve feet in length, unless the vehicle be accompanied by another person and be loaded in such a way that no portion of the said materials touches the ground.

Fine, Rs. 10.

12. *Vehicles laden with bricks, stones, etc.*—No person shall drive upon a public street any vehicle laden with bricks, stones or other materials of a similar character, unless such materials be so secured that they cannot fall on to the street.

Fine, Rs. 10.

13. *Animal laden with bamboos or timber.*—No person shall convey on any public street bamboos or timber placed on the back of any animal in such a way that any portion of such bamboo or timber touches the ground.

Fine, Rs. 10.

14. *Taking elephants or camels along a public street.*—No person shall, without the general or special permission of the commissioners, take any elephant or camel along any public street.

Fine, Rs. 50.

15. *Taking an elephant over a bridge.*—No person shall allow any elephant in his charge to go over any bridge on any public street unless the bridge be constructed of arched masonry, steel or ferro-concrete or similar durable material.

Fine, Rs. 50.

16. *Loaded pack-animals.*—No person shall drive upon a public street, at the same time, more than two loaded pack-animals.

Fine, Rs. 10.

17. *Foals.*—No person riding or driving a mare on any public street shall allow a foal to accompany the mare unless it is secured.

Fine, Rs. 10.

18. *Driving cart in centre of a public street.*—No person shall drive a cart on the centre of any public street on which cart-tracks are provided.

Fine, Rs. 10.

19. *Sitting or sleeping.*—No person shall sit or sleep on any public street so as to obstruct traffic.

Fine, Rs. 10.

Regulation of traffic on foot-paths.

20. *Driving or riding on foot-path.*—No person shall wilfully drive or ride any vehicle or cattle on any foot-path set apart for the use of foot-passengers.

Fine, Rs. 10.

Prevention of obstructions, encroachments or excavations on or near public streets, ghats or ferries.

21. *Abandoning or letting loose cattle.*—No person shall abandon or let loose or negligently allow to get loose, any cattle, on any public street.

Fine, Rs. 5.

22. *Depositing articles.*—No person shall, without the general or special permission of the commissioners, deposit any articles on any public street, except for a temporary purpose, or use any public street as a place for keeping any vehicle or cattle, or for washing any article, or for any other private purpose;

Provided that, during the months of April, May and June, between the hours of 10 p.m. and 5 a.m., khatias may be laid on the side of a public street in such a manner as not to cause obstruction or danger to persons using the public street.

Fine, Rs. 10.

23. *Planting trees.*—No person shall plant a tree on any public street without the general or special permission of the commissioners.

Fine, Rs. 10.

24. *Excavations and enclosures.*—No person shall, without the general or special permission of the commissioners, make any excavation on any public street or on or near any ghat or public ferry or enclose any such street or any part thereof.

Fine, Rs. 10; daily fine Rs. 2.

25. *Removing turf or cutting grass.*—No person shall, without the general or special permission of the commissioners, remove turf or cut grass from any public street or the slopes thereof.

Fine, Rs. 10.

26. *Discharge of water.*—No person shall affix or cause to be affixed to any building owned or occupied by him any gutter, spout or other thing intended for the conveyance and discharge of water, or shall leave in any such building any opening for the discharge of water, in such a way that the water discharged therefrom is thrown or falls upon a public street except through a downpipe or other suitable contrivance reaching to the level of the public street.

Fine, Rs. 10; daily fine Rs. 2.

27. *Breaking in horses.*—No person shall break in horses on any public street not set apart for that purpose.

Fine, Rs. 10; on a second or subsequent conviction, Rs. 50.

28. *Playing games.*—No person shall play any game on any public street.

Fine, Rs. 10.

29. *Throwing stones or missiles.*—No person shall throw or discharge any stone or missile on or near any public street.

Fine, Rs. 10.

30. *Driving across a drain.*—No person shall drive any vehicle across a public drain in or near any public street so as to cause damage to such drain.

Fine, Rs. 10.

31. *Barbed wire.*—No owner or occupier of land abutting on any public street shall fence such land with barbed wire.

Fine, Rs. 10; daily fine Rs. 2.

32. *Dust-bins.*—No person shall—

(*a*) place any burning material in any municipal dust-bin on or near a public street, or

(*b*) burn in any such dust-bin any paper, leaves, grass, wood or other material.

Fine, Rs. 10.

33. *Closed public street.*—No person shall take or drive any motor vehicle, carriage or cart on a public street or part of a street which is closed by order of the commissioners to all or any specified description of wheeled traffic or displace any barrier or fence or notice erected for the purpose of closing such public street or part thereof.

Fine, Rs. 10.

Regulation of the use or occupation of public streets or places for sale of articles, etc., and provision for the levy of fees for such use or occupation.

34. *Exposing articles for sale.*—Without the general or special permission of the commissioners which may, if they so direct, be subject to the payment of fees according to a scale prescribed by them at a meeting, no person shall use or occupy any public street or any other public place, for the sale of any article or for the exercise of any calling or for setting up any booth or stall.

Fine, Rs. 10; on a second or subsequent conviction, Rs. 50.

Jalpaiguri. — No. 349M. — 18th January 1935.—The following draft of a by-law which has been framed by the Commissioners of the Jalpaiguri Municipality, in the district of Jalpaiguri, under section 392 of the Bengal Municipal Act, 1932 (Bengal Act XV of 1932), and which the Government of Bengal (Ministry of Local Self-Government) propose to confirm under section 506 of the Act, is published for the information of persons likely to be affected thereby.

2. The draft will be taken into consideration on the 1st April 1935, and any objection or suggestion received by the undersigned through the District Magistrate and the Divisional Commissioner before that date will be duly considered:—

Draft by-law.

71. (*a*) Whenever a member of a family or any person residing in a house, *serai*, etc., is attacked with cholera, small-pox or plague, the head man of the family or the keeper of the *serai* shall give information either personally or in writing to the municipal office within six hours of that attack or as soon as the disease is detected.

Fine, Rs. 10.

24-Parganas.—No. 352M.—The 18th January 1935.—In exercise of the power conferred by section 8 of the Bengal Municipal Act, 1932 (Bengal Act XV of 1932), and in modification of the Government notification No. 3313M., dated 27th November 1900, the Government of Bengal (Ministry of Local Self-Government) are pleased to declare that the boundaries of the following mauzas as shown in the finally published cadastral settlement maps shall form the limits of the South Suburban Municipality :—

Serial No.	Mauzas.	Jurisdiction list No.	Thana.	Sheets.	Extent of municipal limits.
1	Behala	2	Behala ..	1-5 ..	Whole.
2	Parui	3	Do. ..	3 ..	Do.
3	Ramnarayan Taluk ..	4	Do. ..	..	Do.
4	Gangarampur ..	5	Do. ..	..	Do.
5	Mandalpara ..	6	Do. ..	1 and 2	Do.
6	Mamudpur ..	7	Do. ..	..	Do.
7	Sahapur ..	8	Do. ..	..	Do.
8	Punja Sahapur ..	9	Do. ..	1 and 2	Do.
9	Italghata ..	10	Do. ..	..	Do.
10	Sirifi	11	Do. ..	1 and 2	Do.
11	Saiyadpur ..	12	Do. ..	..	Do.
12	Muradpur ..	13	Do. ..	..	Do.
13	Sarkelat ..	14	Do. ..	..	Do.
14	Basudebpur ..	15	Do. ..	..	Do.
15	Dakshin Behala ..	16	Do. ..	1 and 2	Do.
16	Sarsuna ..	17	Do. ..	..	Plots 1-116, 118, 120-128, 131-142, 145-148, 150-217, 219-240, 242-300, 302-309, 311, 313-384, 386-473, 524-595, 671-675, 677-760, 762-768, 770-798, 800-821, 823-828, 830-903, 905-916, 918-985, 987-1104, 1106-1147, 1149-1209, 1211-1229, 1232-1238, 1240-1241, 1243-1253, 1255-1276, 1279-1322, 1324-1419, 1421-1427, 1429-1442, 1444-1506, 1509-1519, 1521-1537, 1539-1609, 1611-1634, 1636-1642, 1644-1646, 1648-1658, 1660-1662, 1664-1700, 1863-1865, 2501-2512, 2516-2520, 2523-2536.
	Sarsuna ..	17	Do. ..	2 ..	Whole.
	Do.	17	Do. ..	3 ..	Plots 2118-2130, 2199, 2201-2324, 2333, 2335, 2342, 2360.
17	Sibrampur ..	18	Do. ..	1 ..	Plots 56-334, 346-452, 717, 719-781, 788-790, 793, 796-802, 812.
18	Paschim Barisa ..	19	Do. ..	1, 2 and 4	Whole.
			Do. ..	3 ..	Plots 2587, 2638, 2642, 2650, 2651, 2652, 2721.
19	Purba Barisa ..	23	Do. ..	1 and 2 ..	Whole.
			Do. ..	3 ..	Plots 1501-1926, 1928-1968, 1965-2013, 2015, 2016, 2018-2053, 2055-2178, 2198-2218, 2222-2280.
			Do. ..	5 ..	Plots 2801-2828, 2830-2887, 2889-2988, 2991, 2992, 2994-3163, 3188-3204, 3206, 3207.
			Do. ..	6 ..	Plots 3501-3660, 3777-3782, 3786-3791, 3795-3808, 3809.
20	Chak Thakurani ..	24	Do. ..	1 ..	Plots 1-29, 31-104.
21	Haridebpur ..	25	Do. ..	1, 2 and 3	Whole.
			Do. ..	4 ..	Plots 1201-1225, 1350.
22	Paschim Patuari ..	26	Do. ..	1 ..	Whole.
			Do. ..	2 ..	Plots 401-466, 1227-1234.
23	Ramchandrapur ..	31	Do. ..	1 ..	Plots 1-8, 680, 686, 726.
24	Sonamukhi ..	34	Maheshtola ..	1 ..	Plots 171-177, 973.

II. The map may be inspected at the office of the Magistrate of the 24-Parganas.

Jalpaiguri. — No. 345M.—18th January 1935.—The following draft of a by-law, which has been framed by the Commissioners of the Jalpaiguri Municipality, in the district of Jalpaiguri, under section 245 (*a*) of the Bengal Municipal Act, 1932 (Bengal Act XV of 1932), and which the Government of Bengal (Ministry of Local Self-Government) propose to confirm under section 506 of the Act, is published for the information of persons likely to be affected thereby.

2. The draft will be taken into consideration on the 1st April 1935, and any objection or suggestion received by the undersigned through the District Magistrate and the Divisional Commissioner before that date will be duly considered :—

Draft by-law.

No. person shall abandon or let loose or negligently allow to get loose any cattle on or onto any road.

Fine, Rs. 5.

Jalpaiguri. — No. 347M. — 18th January 1935.—The following draft of a by-law, which has been framed by the Commissioners of the Jalpaiguri Municipality, in the district of Jalpaiguri, under section 360 of the Bengal Municipal Act, 1932 (Bengal Act XV of 1932), and which the Government of Bengal (Ministry of Local Self-Government) propose to confirm under section 506 of the Act, is published for the information of persons likely to be affected thereby.

2. The draft will be taken into consideration on the 1st April 1935, and any objection or suggestion received by the undersigned through the District Magistrate and the Divisional Commissioner before that date will be duly considered:—

Draft by-law.

38A. A person having possession of or control over any land or water on or in which there exists any water-hyacinth shall, if so required by a notice in writing signed by the Chairman or Vice-Chairman of the Municipal Commissioners of Jalpaiguri, destroy or remove such water-hyacinth within the period mentioned in such notice, provided that such notice shall be issued simultaneously for whole of the municipal area.

Fine, Rs. 10, daily fine, Rs. 2.

Medical.

Minister-in-charge: The Hon'ble Sir Bijoy Prasad Singh Roy, Kt.

Calcutta. — No. 105Medl.—16th January 1935.—Dr. Suresh Chandra Sinha, M.B. (Cal.), F.R.C.S.E., on return from leave *ex*-India, was placed on supernumerary duty at the Medical College Hospitals, Calcutta, for the period from the 5th to the 16th November 1934.

2. Dr. Sinha is appointed as a Demonstrator of Anatomy, Medical College, Calcutta, with effect from the 17th November 1934, *vice* temporary Assistant Surgeon Dr. Sudhendu Kumar Roy.

Calcutta.—No. 106Medl. — 16th January 1935.—Temporary Assistant Surgeon Dr. Sudhendu Kumar Roy, a Demonstrator of Anatomy, Medical College, Calcutta, was, on relief, placed on supernumerary duty at the Medical College Hospitals, Calcutta, for the period from the 17th November to the 5th December 1934.

Calcutta. — No. 112Medl.—16th January 1935.—Rai Dr. J. N. Chatterji Bahadur, Personal Assistant to the Surgeon-General with the Government of Bengal, is granted leave on average pay with effect from the date of relief up to the 1st April 1935, under rule 81 (*b*) (*ii*) of the Fundamental Rules.

Rajshahi - Calcutta.—No. 113Medl.—16th January 1935.—Dr. K. P. Elloy, I.M.D., Medical Officer, Police Training College, Sardah, is appointed temporarily as Personal Assistant to the Surgeon-General with the Government of Bengal, *vice* Rai Dr. J. N. Chatterji Bahadur, granted leave.

Calcutta - Rajshahi. — No. 114Medl.—16th January 1935.—First Class Military Assistant Surgeon C. W. E. Frederick, House Surgeon, Presidency General Hospital, Calcutta, is appointed to act until further orders as Medical Officer, Police Training College, Sardah, *vice* Dr. K. P. Elloy, I.M.D., transferred.

Calcutta - Mymensingh.—No. 128Medl.—17th January 1935.—Dr. Abdul Halim, on supernumerary duty at the Presidency General Hospital, Calcutta, is posted to the Kishoreganj subdivision and dispensary, in the district of Mymensingh, *vice* Dr. Ananta Mohan Datta.

Mymensingh - Calcutta.—No. 129Medl.—17th January 1935.—Dr. Ananta Mohan Datta of the Kishoreganj subdivision and dispensary, in the district of Mymensingh, is, on relief, placed on supernumerary duty at the Medical College Hospital, Calcutta.

Calcutta. — No. 150Medl.—18th January 1935.—Dr. Hem Chandra Chakravertty, First Assistant Chemical Examiner to the Government of Bengal, is granted leave on average pay for one month, under rule 81 (*b*) (*ii*) of the Fundamental Rules, with effect from the 2nd January 1935.

Calcutta. — No. 151Medl.—18th January 1935.—Dr. Krishnadhan Sinha, Second Assistant Chemical Examiner to the Government of Bengal, is appointed to do the duties of the First Assistant Chemical Examiner to the Government of Bengal, in addition to his own, without extra remuneration, during the absence, on leave, of Dr. Hem Chandra Chakravertty.

Calcutta.—No. 163Medl.—21st January 1935.—Major W. G. H. Warner, I.M.D., Assistant to Surgeon Superintendent, Presidency General Hospital, Calcutta, was appointed to act as Second Resident Medical Officer of that institution, with effect from the 26th March 1934, *vice* Dr. J. F. Coltman, granted leave.

NOTIFICATIONS.

No. 109Medl.—16th January 1935.—In the rules for the training, examination and registration of compounders and dressers issued with notification No. 413Medl., dated the 10th February 1931, make the following amendments:—

(*i*) For rule 12 *substitute* the following:—

"12. *Register of compounders and dressers.*—With a view to regulate, supervise and restrict the practice of compounders duly trained and qualified under the rules published with notification No. 2172Medl., dated the 11th July 1928, or any subsequent modification thereof, and dressers trained under these rules, a register shall be maintained by the State Medical Faculty of Bengal, in which all such compounders and dressers shall be required to have their names enrolled in separate lists. Provided that any compounders and dressers who have passed the Matriculation Examination of a recognised Indian University or an examination accepted by the Governing Body of the State Medical Faculty as equivalent thereto and who obtained their compounders' or dressers' qualification in any other province after a combined course of training extending over not less than two years, which in the opinion of the Governing Body is equivalent to the course prescribed for the same qualification in Bengal, may be admitted to the respective registers maintained by the Faculty in case compounders and dressers with Bengal qualifications are admitted to any similar system of recognition in vogue in such province. No one shall be recognised as a duly qualified compounder or dresser whose name is not borne on the above register."

(*ii*) In rule 13, after the words "passed compounders and dressers," *add* "referred to in rule 12."

(*iii*) For rule 15 *substitute* the following:—

15. For the period up to the 30th June 1935, persons, who already hold the compounders' or dressers' certificate from a recognised medical school in Bengal or from an authority in any other Indian province which is empowered by any enactment in force therein or by the local Government to issue such certificate, shall be allowed to have their names enrolled on the register to be maintained by the State Medical Faculty without further training or examination. The fee for such enrolment shall be Rs. 5 for each qualification.

(*iv*) In Form C in the Appendix to the rules—

(*a*) Between the items—

"District....."

and

"Personal marks of identification....."

insert the following items:—

"Date of passing the last compounders' examination....."

"Whether the candidate will appear for the compounders' examination to be held just before the dressers' examination....."

(*b*) After the words "Prescribed for dressers' examination in this institution" *insert*—

"as a part of his training as a compounder in the six months from ..... to....."

Minister-in-charge: The Hon'ble Sir Bijoy Prasad Singh Roy, Kt.

No. 61 Medl.—12th January 1935.—It is hereby notified for general information that the Government of Bengal (Ministry of Local Self-Government) are pleased to add the following to rule 26 of the rules for the Management of the Government Medical Schools in Bengal, issued under notification No. 1716 Medl., dated the 30th June 1921, as subsequently amended, *viz.*;—

In the case of a vacancy on account of forfeiture of the scholarship under rules 39 and 49 read with rule 20 of these rules, the Surgeon-General with the Government of Bengal may re-award the scholarship to a student of the class in which the vacancy in the scholarship has occurred:

Khulna. — No. 143Medl.—18th January 1935.—The appointment of the following gentlemen as members of the Committee for the management of the Ayurvedic Charitable Dispensary at Ghatbhoge, in the district of Khulna, is notified for general information:—

The Circle Inspector of Bhawanipur Wards Estate, Mansa (*ex-officio*), *vice* Babu Trailakhyanath Chatterji, deceased.

Babu Hemonta Kumar Ghose, *vice* Babu Radha Charan Chatterji, deceased.

G. S. DUTT,
Secy. to the Govt. of Bengal.

EDUCATION DEPARTMENT.

NOTIFICATIONS.

Minister-in-charge: The Hon'ble Khan Bahadur M. Azizul Haque.

Calcutta.—No. 30Edn.—4th January 1935.—The Government of Bengal (Ministry of Education) are pleased to appoint Dr. Prabhat Chandra Chakrabarty, M.A., PH.D., Ashutosh Professor of Sanskrit, Calcutta University, to be a member of the Governing Body of the English (Arts) Department of the Sanskrit College, Calcutta, as constituted in terms of Government notification No. 34T.Edn., dated the 21st April 1932, for the remainder of its term, *vice* Mr. Syamaprasad Mukherjee, M.A., B.L., Bar.-at-Law, resigned.

Presidency-Burdwan Divns.—No. 52Edn.—5th January 1935.—Miss Suniti Bala Gupta is appointed temporarily to act as Inspectress of Schools, Presidency and Burdwan Divisions, with effect from the date on which she joined the appointment, during the absence, on leave, of Miss Hridayabala Bose, or until further orders.

Murshidabad.—No. 209Edn.—16th January 1935.—In exercise of the power conferred by section 6 of the Bengal (Rural) Primary Education Act, 1930 (Bengal Act VII of 1930), the Government of Bengal (Ministry of Education) are pleased to establish a District School Board for the district of Murshidabad, with effect from the 1st March 1935, consisting of the following members, namely:—

(*a*) the District Magistrate, *ex-officio;*
(*b*) the Subdivisional Magistrates of the Sadar, Lalbagh, Jangipur and Kandi subdivisions, *ex-officio;*
(*c*) the District Inspector of Schools, *ex-officio;*
(*d*) the Chairmen of the Sadar, Lalbagh, Jangipur and Kandi local boards, *ex-officio;*
(*e*) the Chairman and the Vice-Chairman of the district board, *ex-officio;*
(*f*) four members to be elected by the members of the district board;
(*g*) one member for each of the four subdivisions to be elected by the members of the union boards, union committees and panchayats within the subdivisions;
(*h*) four members to be appointed by the local Government; and
(*i*) one teacher of a primary school to be appointed by the local Government.

Murshidabad.—No. 214Edn.—16th January 1935.—In exercise of the power conferred by sub-section (*1*) of section 8 of the Bengal (Rural) Primary Education Act, 1930 (Bengal Act VII of 1930), the Government of Bengal (Ministry of Education) are pleased to appoint the District Magistrate of Murshidabad, to be President of the District School Board established for that district for a term of four years, with effect from the 1st March 1935.

Nadia.—No. 219Edn.—16th January 1935.—In exercise of the power conferred by section 6 of the Bengal (Rural) Primary Education Act, 1930 (Bengal Act VII of 1930), the Government of Bengal (Ministry of Education) are pleased to establish a District School Board for the district of Nadia, with effect from the 1st March 1935, consisting of the following members, namely:—

(*a*) the District Magistrate, *ex-officio;*
(*b*) the Subdivisional Magistrates of the Sadar, Kushtia, Meherpur, Chuadanga and Ranaghat subdivisions, *ex-officio;*
(*c*) the District Inspector of Schools, *ex-officio;*
(*d*) the Chairmen of the Sadar, Kushtia, Meherpur, Chuadanga and Ranaghat local boards, *ex-officio;*
(*e*) the Chairman and the Vice-Chairman of the district board, *ex-officio;*
(*f*) five members to be elected by the members of the district board;
(*g*) one member for each of the five subdivisions to be elected by the members of the union boards, union committees, and panchayats within the subdivisions;
(*h*) five members to be appointed by the local Government; and
(*i*) one teacher of a primary school to be appointed by the local Government.

Nadia.—No. 224Edn.—16th January 1935.—In exercise of the power conferred by sub-section (*1*) of section 8 of the Bengal (Rural) Primary Education Act, 1930 (Bengal Act VII of 1930), the Government of Bengal (Ministry of Education) are pleased to appoint the District Magistrate of Nadia, to be President of the District School Board established for that district for a term of four years, with effect from the 1st March 1935.

No. 271Edn.—18th January 1935.—In exercise of the power conferred by clause (*m*) of sub-section (*2*) of section 66 of the Bengal (Rural) Primary Education Act, 1930 (Bengal Act VII of 1930), the Government of Bengal (Ministry of Education) are pleased to make the following rules:—

Rules under section 66(2)(m) of the Bengal (Rural) Primary Education Act, 1930, regarding the number of meetings to be held by the District School Board, the number of members who constitute a quorum thereat, the keeping of minutes of the proceedings thereof, the submission of copies of such proceedings to the Commissioner of the Division, and the preparation and custody of registers and records by the Board.

1. The meetings of the District School Board shall be either ordinary or special.
2. A meeting of the Board shall be called by the President at least once in every three months and not more than six meetings shall ordinarily be held in a year.
3. A special meeting of the Board may be called at any time by the President.
4. The quorum necessary for the transaction of business at a meeting shall be one-third of the total number of the members of the Board.
5. For a special meeting of the Board, the quorum shall be one-half of the total number of members of the Board.
6. A special meeting shall be convened when any of the following subjects are considered, namely:—

(*a*) the making of regulations under section 19,
(*b*) the preparation of the annual budget estimates required by section 40,
(*c*) the delegation of the Board's powers to Union Boards, Union Committees or Panchayats under section 51.

7. The minutes of the proceedings of every meeting of the Board shall be recorded in English.

8. Every motion or amendment duly moved and seconded and pressed to a division at a meeting shall be reduced to writing before being put to vote. Every such motion or amendment shall be recorded in full in the minutes of the proceedings of such meeting together with the number and names of voters for and against it.

9. In the event of any objection being raised to the manner in which any motion or amendment has been recorded, the President shall decide the question after reference to the original draft, and if he finds the record inaccurate, he shall make the necessary correction in the minutes of the proceedings of the meeting.

10. The minutes of the proceedings of each meeting of the Board shall be drawn up and recorded in a book to be kept for the purpose and shall be signed by the President of the meeting.

11. A copy of the minutes of the proceedings of each meeting of the Board shall, within a week from the date of the meeting, be forwarded to the Magistrate of the district for transmission to the Commissioner of the Division.

12. The proceedings book, account books and all registers of the Board shall be in the custody of the District Inspector of Schools.

Birbhum.—No. 285Edn.—21st January 1935.—Babu Gopal Chandra Maity, Subdivisional Inspector of Schools, Birbhum, is appointed to act in the Bengal Educational Service as District Inspector of Schools, Birbhum, with effect from 2nd January 1935, or, any subsequent date on which he joined the appointment, during the absence, on leave, of Babu Kshirode Chandra Sen Gupta, or until further orders.

Tippera-Chittagong.—No. 288Edn.—21st January 1935.—Babu Dwijendra Nath Datta Chaudhury, District Inspector of Schools, Tippera, is appointed as District Inspector of Schools, Chittagong, with effect from the 1st February 1935, or any subsequent date on which he joints the appointment, *vice* Maulvi Abdul Ghani, on deputation.

Miscellaneous.

NOTIFICATION.

Minister-in-charge: The Hon'ble Khan Bahadur M. Azizul Haque.

Calcutta. — No. 240Mis. — 21st January 1935.—Maulvi Quazi Muhammad Sadrul Ola, Sub-Deputy Collector, now employed as Special Officer for Wakfs, under the Education Department, is allowed leave on average pay for the period from 3rd to 19th January 1935, under Fundamental Rule 81(*b*)(*ii*).

Registration.

NOTIFICATIONS.

Minister-in-charge: The Hon'ble Khan Bahadur M. Azizul Haque.

Noakhali. — No. 70Regn.—17th January 1935.—In exercise of the power conferred by section 3 of the Bengal Muhammadan Marriages and Divorces Registration Act, 1876 (Bengal Act I of 1876), the Government of Bengal (Ministry of Education) are pleased to appoint Maulvi Abdul Awal temporarily to be a Muhammadan Registrar within the chaukidari unions X and XII-XVII of police-station Sudharam, in the district of Noakhali, during the absence, on leave, of Maulvi Anwarullah, or until further orders.

Noakhali. — No. 71Regn.—17th January 1935.—In exercise of the power conferred by section 2 of the Kazis' Act, 1880 (Act XII of 1880), the Government of Bengal (Ministry of Education) are pleased to appoint Maulvi Abdul Awal temporarily to be the Kazi for the celebration of marriages and the performance of other rites and ceremonies within the chaukidari unions X and XII-XVII of police-station Sudharam, in the district of Noakhali, during the absence, on leave, of Maulvi Anwarullah, or until further orders.

Jessore. — No. 76Regn. — 17th January 1935.—In exercise of the power conferred by section 3 of the Bengal Muhammadan Marriages and Divorces Registration Act, 1876 (Bengal Act I of 1876), the Government of Bengal (Ministry of Education) are pleased to appoint Maulvi Otaruddin temporarily to be a Muhammadan Registrar within the police-station of Alfadanga, in the district of Jessore, during the absence, on leave, of Maulvi Bazlul Huq, or until further orders.

Jessore. — No. 77Regn. — 17th January 1935.—In exercise of the power conferred by section 2 of the Kazis' Act, 1880 (Act XII of 1880), the Government of Bengal (Ministry of Education) are pleased to appoint Maulvi Otaruddin temporarily to be the Kazi for the celebration of marriages and the performance of other rites and ceremonies within the police-station of Alfadanga, in the district of Jessore, during the absence, on leave, of Maulvi Bazlul Huq, or until further orders.

Howrah. — No. 82Regn.—17th January 1935.—In exercise of the power conferred by section 3 of the Bengal Muhammadan Marriages and Divorces Registration Act, 1876 (Bengal Act I of 1876), the Government of Bengal (Ministry of Education) are pleased to appoint Maulvi Abdul Latif temporarily to be a Muhammadan Registrar within the police-stations of Amta, Bagnan, Uluberia, Bowria and Syampur, in the district of Howrah, until further orders.

Howrah. — No. 83Regn.—17th January 1935.—In exercise of the power conferred by section 2 of the Kazis' Act, 1880 (Act XII of 1880), the Government of Bengal (Ministry of Education) are pleased to appoint Maulvi Abdul Latif temporarily to be the Kazi for the celebration of marriages and the performance of other rites and ceremonies within the police-stations of Amta, Bagnan, Uluberia, Bowria and Syampur, in the district of Howrah, until further orders.

Mymensingh.—No. 88Regn.—17th January 1935.—In exercise of the power conferred by section 3 of the Bengal Muhammadan Marriages and Divorces Registration Act, 1876 (Bengal Act I of 1876), the Government of Bengal (Ministry of Education) are pleased to appoint Maulvi Shah Muhammad Abul Mansur temporarily to be a Muhammadan Registrar within unions Nos. 11 and 12 of Kalihati police-station, Nos. 7, 9 and 10 of Ghatail police-station and Nos. 8 and 9 of Phulbaria police-station, in the district of Mymensingh.

This cancels the order in notification No. 734Regn., dated the 8th December 1934.

Mymensingh.—No. 89Regn.—17th January 1935.—In exercise of the power conferred by section 2 of the Kazis' Act, 1880 (Act XII of 1880), the Government of Bengal (Ministry of Education) are pleased to appoint Maulvi Shah Muhammad Abul Mansur temporarily to be the Kazi for the celebration of marriages and the performance of other rites and ceremonies within unions Nos. 11 and 12 of Kalihati police-station, Nos. 7, 9 and 10 of Ghatail police-station and Nos. 8 and 9 of Phulbaria police-station, in the district of Mymensingh.

This cancels the order in notification No. 735Regn., dated the 8th December 1934.

Dinajpur. — No. 94Regn.—18th January 1935.—Babu Radha Ranjan Ray, District Sub-Registrar of Dinajpur, is allowed leave on average pay for three months and eleven days, with effect from the 9th January 1935, under rule 81 (*b*) (*ii*) of the Fundamental Rules.

Dinajpur.—No. 101 Regn.—21st January 1935.—Babu Radha Ranjan Ray, District Sub-Registrar of Dinajpur, is allowed leave on average pay for the period from the 1st to the 12th December 1934, under rule 81(*b*)(*ii*) of the Fundamental Rules, in extension of the leave already granted to him.

Jessore.—No. 105Regn.—21st January 1935.—In exercise of the power conferred by section 3 of the Bengal Muhammadan Marriages and Divorces Registration Act, 1876 (Bengal Act I of 1876), the Government of Bengal (Ministry of Education) are pleased to appoint Maulvi Muhammad Lutfur Rahman temporarily to be a Muhammadan Registrar within the police-station of Sarsha, in the district of Jessore.

Jessore. — No. 106Regn. — 21st January 1935.—In exercise of the power conferred by section 2 of the Kazis' Act, 1880 (Act XII of 1880), the Government of Bengal (Ministry of Education) are pleased to appoint Maulvi Muhammad Lutfur Rahman temporarily to be the Kazi for the celebration of marriages and the performance of other rites and ceremonies within the police-station of Sarsha, in the district of Jessore.

H. R. WILKINSON,
Secy. to the Govt. of Bengal.

Orders by the Director of Public Instruction, Bengal.

Bengal Educational Service.

Birbhum.—No. 1-B.—4th January 1935.—Babu Kshirode Chandra Sen Gupta, District Inspector of Schools, Birbhum, in the Bengal Educational Service, is granted under Fundamental Rule 81(*b*)(*ii*), leave on average pay for two months, with effect from 2nd January 1935 or any subsequent date on which he availed himself of it.

Chittagong.—No. 2-B.—16th January 1935.—Babu Satish Chandra Ganguli, Professor of Chemistry, Chittagong College, in the Bengal Educational Service, is declared, in terms of rules 81(*b*)(*ii*) and 82(*b*) of the Fundamental Rules, to have been on leave on average pay for the period from the 2nd to 5th January 1935.

2. He was permitted to prefix to his leave, Sunday, the 23rd December 1934, the Christmas and the New Year's Day holidays extending from 24th December 1934 to 1st January 1935 and to suffix to it, Sunday, the 6th January 1935 and the gazetted holidays on the 7th and 8th idem, provided the conditions prescribed in Subsidiary Rules 206 to 208 were fulfilled.

Presy. Divn.—No. 3-B.—16th January 1935.—Mrs. Manisha Roy, Assistant Inspectress of Schools, Presidency Division (24-Parganas, Jessore and Khulna), in the Women's Branch of the Bengal Educational Service, is granted, under Fundamental Rule 81(*b*)(*ii*), leave on average pay for the period from 23rd December 1934 to 31st January 1935, in extension of the leave granted to her in this office notification No. 70-B., dated the 29th October 1934.

Chittagong.—No. 4-B.—16th January 1935.—Babu Jatindra Nath Sikdar, Professor of History, Chittagong College, in the Bengal Educational Service, is declared, in terms of rules 81(*b*)(*ii*) and 82(*b*) of the Fundamental Rules, to have been on leave on average pay for the period from 17th December 1934 to 22nd December 1934.

2. He was permitted to prefix to his leave, Sunday, the 16th December 1934 and to suffix to it, Sunday, the 23rd December 1934 and the Christmas and the New Year's Day holidays extending from 24th December 1934 to 1st January 1935, provided the conditions prescribed in Subsidiary Rules 206 to 208 were fulfilled.

J. M. BOTTOMLEY,

Director of Public Instrn., Bengal.

Orders by the Inspector-General of Registration, Bengal.

Jessore.—No. 7.—14th January 1935.—Babu Sudhir Chandra Mitra, Sub-Registrar of Manirampur, in the district of Jessore, is allowed leave on average pay for one month, under rule 81 (*b*) (*ii*) of the Fundamental Rules, with effect from the 2nd January 1935.

Calcutta-Jessore.—No. 8. — 14th January 1935.—Babu Saurindra Nath Sen, Sub-Registrar attached to Calcutta, is appointed to act as Sub-Registrar of Manirampur, in the district of Jessore, with effect from the date on which he joins the appointment, during the absence, on leave, of the permanent incumbent, or until further orders.

Noakhali.—No. 9.—14th January 1935.—Maulvi Habibur Rahman, No. I, 1st Joint Sub-Registrar of Lakshmipur at Raipur, in the district of Noakhali, is allowed leave on average pay for four days, under rule 81 (*b*) (*ii*) of the Fundamental Rules, with effect from the 2nd January 1935.

Faridpur.—No. 10.—14th January 1935.—Maulvi Muhammad Mokammel, Sub-Registrar of Palong, in the district of Faridpur, is allowed leave on average pay for twenty-eight days, under rule 81 (*b*) (*ii*) of the Fundamental Rules, in extension of the leave granted to him in this department notification No. 626, dated the 17th December 1934.

Noakhali.—No. 11.—14th January 1935.—Maulvi Farid Bakht Mazumdar, 2nd Joint Sub-Registrar of Begumganj at Sonaimuri, in the district of Noakhali, is allowed leave on average pay for four days, under rule 81 (*b*) (*ii*) of the Fundamental Rules, with effect from the 2nd January 1935.

Noakhali.—No. 12.—15th January 1935.—Maulvi Anisuddin Ahmed, Sub-Registrar of Hatiya (Ramkumar Pal's Hat), in the district of Noakhali, is allowed leave on average pay for four days, under rule 81 (*b*) (*ii*) of the Fundamental Rules, with effect from the 2nd January, 1935.

Dacca.—No. 13.—16th January 1935.—Maulvi Mir Mufazzal Hussain, Sub-Registrar of Munshiganj, in the district of Dacca, is allowed leave on average pay for three days, under rule 81 (*b*) (*ii*) of the Fundamental Rules, with effect from the 2nd January 1935.

Murshidabad. — No. 14. — 16th January 1935.—Maulvi Saiyid Zurghamuddin Hyder Hasony, Sub-Registrar of Lalbag, in the district of Murshidabad, is appointed to be Sub-Registrar of Jangipur in the same district.

Murshidabad. — No. 15. — 16th January 1935.—Maulvi Saiyid Muhammad Ali Mirza, Sub-Registrar of Jangipur, in the district of Murshidabad, is appointed to be Sub-Registrar of Lalbagh in the same district.

Dacca-Bakarganj.—No. 16.—18th January 1935.—Maulvi Muhammad Jalaluddin, Sub-Registrar attached to Dacca, is appointed to act, until further orders, as Joint Sub-Registrar of Amtali at Barguna, in the district of Bakarganj.

S. AHMED,

Inspector-General of Regn., Bengal.

FINANCE DEPARTMENT.

Finance.

NOTIFICATION.

No. 339F.—21st January 1935.—In exercise of the powers conferred by rules 41 and 42 and clause (*d*) of rule 44 of the Civil Services (Classification, Control and Appeal) Rules, the Governor in Council and acting with his Ministers hereby makes the following amendments to the Bengal Services (India Provident Fund) (Sterling Accounts) Rules, 1934, namely:—

Amendments.

In rule 4 (*1*) *for* the words "on or before 31st January 1935" the words "on or before 31st July 1935" shall be *substituted*.

In the same rule 4 (*1*), *for* the words "within six months" the words "within 12 months" shall be *substituted*.

And the said rules shall have effect and shall be deemed always to have had effect as if they had been as so amended.

Audit.

NOTIFICATION.

No. 256F.—17th January 1935.—In exercise of the powers conferred by rules 41, 42 and 44 of the Civil Services (Classification, Control and Appeal) Rules, the Governor in Council and acting with his Ministers is pleased to make the following amendments to schedule I of the Bengal Services (Revision of Pay) Rules, 1934, namely:—

1. Police Department.

Under "Office of the Commissioner of Police (Special Branch)," the following shall be added:—

Stenographer—Rs. 175-180-8/2-220.

2. Industries Department.

(*a*) *Add*—

Superintendent, Bengal Tanning Institute—Rs. 650 (when held by a part-time officer).

(*b*) The following entry under "Technical and Industrial Institutions" shall be deleted:—

Clerk (part-time), Bengal Tanning Institute—Rs. 15.

3. Public Works Department.

After the entry "Bengal Subordinate Engineering Service—Overseers—Rs. 60-65-5/2-70-10/2-140-20/2-200 (efficiency bar after 11th stage)," the following shall be added:—

Electrical Executive Engineers, Workshops and Eastern Divisions —Rs. 500-50/2-1,000 (efficiency bar after 6th stage).

Initial pay of promoted officers—

The initial pay of an Electrical Assistant Engineer promoted to these posts shall be—

(*a*) when promoted to officiate, the pay in the Electrical Executive Engineer's scale equal to (or if there be no such pay in that scale, the pay in that scale next to above) the officer's pay in the time scale of Electrical Assistant Engineers, *plus* Rs. 150;

(*b*) when promoted substantively, either

(*i*) the pay he would be entitled to if he were merely officiating, or

(*ii*) Rs. 650, whichever is greater.

4. Revenue Department.

(*a*) Under "Office of the Director of Land Records, Bengal," the following shall be added:—

Typist—Rs. 45-5/2-70.

(*b*) For the entries against the scale "Rs. 35-2½-55" under "District Executive Offices—Khas Mahal Department—Collecting, Survey and Miscellaneous Staff," as inserted with this department notification No. 5638F., dated the 6th August 1934, the following shall be substituted:—

Tahsildars, 24-Parganas, Faridpur, Bogra, Nadia, Murshidabad, Khulna, Dacca, Mymensingh, Chittagong Hill Tracts, Malda, Pabna, Hooghly: Naibs, 24-Parganas: Amins, Faridpur, Darjeeling, Chittagong Hill Tracts: Clerks, Bakarganj: Kanungo, Bogra: Amin Peshkar, Jalpaiguri: Road Inspector, Darjeeling: Tahsil Muharrirs, Chittagong, Tippera, Noakhali.

5. Public Health Department.

Under "Agency Establishment—Port Health Department, Calcutta," the following shall be added:—

1st Assistant Port Health Officer—Rs. 260-35/2-400-20/2-420 (when held by a non-military Assistant Surgeon).

6. Medical Department.

(*a*) For the scale entered against "Police Surgeon, Calcutta," the following shall be substituted:—

(*1*) Provincial Service Officers—Pay as Civil Surgeon of the Bengal Medical Service, *plus* Rs. 100.

(*2*) Direct recruits—Rs. 650-75/2-950.

(*b*) Under "Dacca Medical School," "Lady Superintendent of Hostel" shall be substituted for "Lady Superintendent of Hospitals."

(*c*) Under the hospitals noted below the entries shown against each shall be deleted:—

(*i*) Voluntary Venereal Hospital—Matron—Rs. 215; Nurses—Rs. 40-45-10/2-75.

(*ii*) Albert Victor Hospital, Gobra—Laboratory Assistants—Rs. 40-4/2-44-2/2-50.

(*iii*) Pasteur Institute, Calcutta—Accountant—Rs. 80.

(*iv*) Carmichael Hospital for Tropical Diseases—Radiographer.

And the said rules shall have effect and shall be deemed always to have had effect as if they had been made as so amended.

No. 332½F. — 19th January 1935. — The following correction, which has been authorised, is published for general information:—

CORRIGENDUM.

The Bengal Financial Rules, 1st Edition (Reprint), 1930.

Page 120.—S. R. 8 under T. O. 7.—Insert the following as clause (*g*):—

(*g*) Receipts of the Khas Mahal Department to meet departmental expenditure in the following Khas Mahal Tahsil offices in the district of Chittagong:—

Patiya, Satkania, Raozan, Kutubdia.

D. GLADDING,

Secy. to the Govt. of Bengal.

PUBLIC WORKS DEPARTMENT.

Establishment.

NOTIFICATION.

Minister-in-charge: The Hon'ble Nawab K. G. M. Faroqui, Khan Bahadur.

No. 132.—18th January 1935.—Mr. Rasik Lal Hui, Executive Engineer, Chittagong Division, was allowed, under the proviso to rule 81 (*b*) (*ii*) of the Fundamental Rules, leave on average pay, on medical certificate, for ten days, with effect from the 18th December 1934.

J. D. V. HODGE,
Secy. to the Govt. of Bengal.

DEPARTMENT OF AGRICULTURE AND INDUSTRIES.

Veterinary.

NOTIFICATION.

Minister-in-charge: The Hon'ble Nawab K. G. M. Faroqui, Khan Bahadur.

No. 388Vety.—15th January 1935.—Babu Debendra Kumar Sen, Lecturer, Bengal Veterinary College, is allowed leave on half average pay for one month, with effect from the 1st February 1935, under rule 81 (*d*) of the Fundamental Rules, in extension of the leave already granted to him in notification No. 674-T.A.I., dated the 6th October 1934.

J. D. V. HODGE,
Secy. to the Govt. of Bengal.

REVENUE DEPARTMENT.

Land Revenue.

NOTIFICATIONS.

Rangpur-Mymensingh. — No. 1002L.R.—16th January 1935.—Babu Sarada Ranjan Datta Gupta, Sub-Deputy Collector, now employed as Assistant Settlement Officer in the district of Rangpur, is, in the interest of public service, appointed to be an Assistant Settlement Officer in the district of Mymensingh, with effect from the date on which he joins his settlement duties in that district.

Mymensingh. — No. 1003L.R. — 16th January 1935.—Under the provisions of section 3 (*14*) of the Bengal Tenancy Act, 1885 (Act VIII of 1885), Babu Sarada Ranjan Datta Gupta, Sub-Deputy Collector, is authorised to discharge, in the district of Mymensingh, the functions of a Revenue Officer, under Chapter X of that Act, so far as they relate to surveys and the preparation of record-of-rights.

He is also vested with the powers of an Assistant Settlement Officer, under Chapter VII, Part I, of the rules under the Bengal Tenancy Act, in respect of the aforesaid area.

Mymensingh-Rangpur. — No. 1004L.R.—16th January 1935.—Babu Probhat Chandra Sen, Sub-Deputy Collector, now employed as Assistant Settlement Officer, in the district of Mymensingh, is, in the interest of public service, appointed to be an Assistant Settlement Officer in the district of Rangpur, with effect from the date on which he joins his settlement duties in that district.

Rangpur. — No. 1005L.R.—16th January 1935.—Under the provisions of section 3 (*14*) of the Bengal Tenancy Act, 1885 (Act VIII of 1885, Babu Probhat Chandra Sen, Sub-Deputy Collector, is authorised to discharge, in the district of Rangpur, the functions of a Revenue Officer, under Chapter X of that Act, so far as they relate to surveys and the preparation of record-of-rights.

He is also vested with the powers of an Assistant Settlement Officer, under Chapter VII, Part I, of the rules under the Bengal Tenancy Act, in respect of the aforesaid area.

Faridpur.—No. 1008L.R. — 16th January 1935.—In exercise of the powers conferred by section 3 of the Bengal Land Revenue Settlement Regulation, 1825 (IX of 1825), read with section 20 of the Bengal Land Revenue Settlement Regulation, 1822 (VII of 1822), the Governor in Council is pleased to vest Babu Anukul Chandra Das, Settlement Kanungo, who has, by notification No. 197C.P., dated the 5th January, 1935, been vested by the Board of Revenue with the powers of a Collector in the estate of Muhammed Ismail Munshi and Abdul Hamid Munshi of Badekhagail, in the district of Faridpur, for the purpose of the work of maintenance of the record-of-rights of that estate, with powers under section 19 of the said Bengal Land Revenue Settlement Regulation, 1822, within the local limits of that estate, to require and compel persons mentioned in the section to attend and produce accounts and other papers and to examine such persons under that section for the purpose of the said work of the maintenance of the record-of-rights.

Noakhali.—No. 1010L.R. — 16th January 1935.—In exercise of the powers conferred by section 3 of the Bengal Land Revenue Settlement Regulation, 1825 (IX of 1825), read with section 20 of the Bengal Land Revenue Settlement Regulation, 1822 (VII of 1822), the Governor in Council is pleased

to vest Babu Mahim Chandra Datta, Settlement Kanungo, who has, by notification No. 196C.P., dated the 5th January 1935, been vested by the Board of Revenue with the powers of a Collector in the estate of Babu Hari Prasanna Roy Choudhury and others, Zeminders, in the district of Noakhali, for the purpose of the work of maintenance of the record-of-rights of that estate, with powers under section 19 of the said Bengal Land Revenue Settlement Regulation, 1822, within the local limits of that estate, to require and compel persons mentioned in the section to attend and produce accounts and other papers and to examine such persons under that section for the purpose of the said work of the maintenance of the record-of-rights.

Midnapore.—No. 1057L.R.—17th January 1935.—Babu Phanindra Bhusan Mitra, Sub-Deputy Collector and Manager of the Mahisadal Wards Estate, in the district of Midnapore, is allowed extension of leave on average pay, under rule 81 (*b*) (*ii*) of the Fundamental Rules, up to the 23rd October 1934.

Murshidabad.—No. 1072L.R.—17th January 1935.—In exercise of the power conferred by section 7 of the Government Management of Private Estates Act, 1892 (Act X of 1892), the Governor in Council is pleased to direct that the general rate leviable under section 3 of the Act on the estate of the Nawab Bahadur of Murshidabad for the year commencing from the 1st April 1934 and ending on the 31st March 1935 shall be calculated at 1¼ per cent. on the gross income of the estate and that the audit rate leviable on the estate under section 4 of Act X of 1892 mentioned above shall be calculated at 4 annas per cent.

No. 1111L.R.—18th January 1935.—Babu Pramode Ranjan Das Gupta, Deputy Magistrate and Deputy Collector, employed in the Settlement Department, is allowed leave on average pay for four months, under rule 81 (*b*) (*ii*) of the Fundamental Rules, with effect from the 24th October 1934.

No. 1114L.R.—18th January 1935.—Babu Pramode Ranjan Das Gupta, Deputy Magistrate and Deputy Collector, on leave, is appointed to be Personal Assistant to the Director of Land Records and Surveys, Bengal, with effect from the date on which he takes over charge of his duties.

No. 1324L.R.—21st January 1935.—Major C. B. Sexton, Extra Assistant Superintendent, Survey of India, is appointed as Officer-in-charge, Bengal Traverse Party and Drawing Office, with effect from the 23rd December 1934.

Land Acquisition.

NOTIFICATIONS.

Birbhum.—No. 943L.A. — 15th January 1935.—Whereas it appears to the Governor in Council that land is likely to be required to be taken by Government at the public expense for a public purpose, viz., for the Bakreswar Canal Irrigation Scheme in the villages of Jhariamahmudpur and Bhadutia, jurisdiction list Nos. 178 and 179, thana Dubrajpur, pargana Jainujial, district Birbhum, it is hereby notified that for the above purpose a piece of land comprising cadastral plots No. 628 of mauza Jhariamahmudpur and No. 514 of mauza Bhadutia and measuring, more or less, 2·09 acres, is likely to be required within the aforesaid villages of Jhariamahmudpur and Bhadutia.

This notification is made, under the provisions of section 4 of Act I of 1894, to all whom it may concern.

A plan of the land may be inspected in the office of the Collector of Birbhum.

In exercise of the powers conferred by the aforesaid section, the Governor in Council is pleased to authorise the officers for the time being engaged in the undertaking, with their servants and workmen, to enter upon and survey the land and do all other acts required or permitted by that section.

Any person interested in the above land, who has any objection to the acquisition thereof, may, within thirty days after the date on which public notice of the substance of this notification is given in the locality, file an objection in writing before the Collector of Birbhum.

24-Parganas.—No. 1012L.A.—16th January 1935.—The Governor in Council is pleased to cancel the notification No. 5570L.A., dated the 9th May 1933, under section 4 of the Land Acquisition Act, I of 1894, published at page 739, Part I of the *Calcutta Gazette* of the 18th idem, in respect of the proposed acquisition of 0·0145 of an acre of land required by the Naihati Municipality for the construction of a drain on the north of Arabinda Road in the village of Kanthalpara, jurisdiction list No. 4, thana Naihati, pargana Havelisahar, district 24-Parganas.

Hooghly.—No. 1136L.A.—18th January 1935.—The Governor in Council is pleased to cancel the notification No. 6261L.A., dated the 28th May 1934, under section 4 of the Land Acquisition Act, published at page 772, Part I of the *Calcutta Gazette* of the 31st idem, in respect of the proposed acquisition of ·0078 of an acre of land required by the Howrah-Amta Light Railway Company for accommodating gate lodge No. 5 and two-storied goomty for forerunners in the village of Howrah, pargana Boro, district Howrah.

Tippera.—No. 1139L.A. — 18th January 1935.—Whereas it appears to the Governor in Council that additional land is likely to be required to be taken by Government at the public expense for a public purpose, viz., for the protection from erosion of the bank of Dakatia khal near the Daulatgonj railway station on the Noakhali branch of the Assam-Bengal Railway, in the village of Laksam, jurisdiction list No. 192, thana Laksam, district Tippera, it is hereby notified that for the above purpose a piece of land, measuring, more or less, 0·99 of an acre, bounded on the north, south and west by the remaining portion of cadastral survey plot No. 220 and on the east by cadastral survey plot Nos. 212, 213, 214, 215, 216, 217, 218, 219, 221, 222 and 223, is likely to be required within the aforesaid village of Laksam.

This notification is made, under the provisions of section 4 of Act I of 1894, to all whom it may concern.

A plan of the land may be inspected in the office of the Subdivisional Officer, Sadar (South), Comilla.

In exercise of the powers conferred by the aforesaid section, the Governor in Council is pleased to authorise the officers for the time being engaged in the undertaking, with their servants and workmen, to enter upon and survey the land and do all other acts required or permitted by that section.

Any person interested in the above land, who has any objection to the acquisition thereof, may, within thirty days after the date on which public notice of the substance of this notification is given in the locality, file an objection in writing before the Collector of Tippera.

Burdwan.—No. 1216L.A. — 19th January 1935.—In exercise of the powers conferred by section 48(*1*) of the Land Acquisition Act, I of 1894, the Governor in Council is pleased to withdraw from the acquisition of 0·07 of an acre of land covered by declaration No. 7512L.A., dated the 28th June 1933, published at page 979, Part I of the *Calcutta Gazette* of the 6th July 1933, and required by the East Indian Railway for extension of marshalling lines in connection with overhead coaling arrangement at Burdwan station, in the village of Bahir Sarbbamangala, thana Burdwan, district Burdwan.

Bogra.—No. 1306L.A.—21st January 1935. —Whereas it appears to the Governor in Council that land is likely to be required to be taken by Government, partly at the public expense and partly at the expense of the Madrassa Committee for a public purpose, viz., for Yaqubia Girls' Junior Madrassa, Bogra, in mauza Sutrapur, in the village of Sutrapur, thana Bogra, pargana Shelbarsha, zilla Bogra, it is hereby notified that for the above purpose a piece of land comprising cadastral plots Nos. 2262 and 2263, measuring, more or less, 0·4550 of an acre, is likely to be required within the aforesaid village of Sutrapur.

This notification is made, under the provisions of section 4 of Act I of 1894, to all whom it may concern.

A plan of the land may be inspected in the office of the Collector of Bogra.

In exercise of the powers conferred by the aforesaid section, the Governor in Council is pleased to authorise the officers for the time being engaged in the undertaking, with their servants and workmen, to enter upon and survey the land and do all other acts required or permitted by that section.

Any person interested in the above land, who has any objection to the acquisition thereof, may, within thirty days after the date on which public notice of the substance of this notification is given in the locality, file an objection in writing before the Collector of Bogra.

24-Parganas.—No. 1312L.A.—21st January 1935.—Whereas it appears to the Governor in Council that additional land is likely to be required to be taken by Government at the public expense for a public purpose, viz., for the bus stand at 6th mile, 3rd furlong, of Diamond Harbour Road, in the village of Behala, jurisdiction list No. 2, thana Behala, pargana Balia, district 24-Parganas, it is hereby notified that for the above purpose a piece of land comprising portion of cadastral plot No. 6917, and measuring, more or less, 0·0028 of an acre, is likely to be required within the aforesaid village of Behala.

This notification is made, under the provisions of section 4 of Act I of 1894, to all whom it may concern.

A plan of the land may be inspected in the office of the Executive Engineer, Suburban Division.

In exercise of the powers conferred by the aforesaid section, the Governor in Council is pleased to authorise the officers for the time being engaged in the undertaking, with their servants and workmen, to enter upon and survey the land and do all other acts required or permitted by that section.

Any person interested in the above land, who has any objection to the acquisition thereof, may, within thirty days after the date on which public notice of the substance of this notification is given in the locality, file an objection in writing before the Collector of the 24-Parganas.

24-Parganas.—No. 1318L.A.—21st January 1935.—Whereas it appears to the Governor in Council that land is likely to be required to be taken by Government at the expense of the district board, 24-Parganas, for a public purpose, viz., for the extensoin of Gangajoara road from Sonarpur Railway Station to Kheadaha Bazar (third time) in the

villages of Gangajoara, Nayabad and Kheadaha, jurisdiction list Nos. 18, 17 and 11, thana Sonapur, parganas Khaspur, Calcutta and Madanmal, district 24-Parganas, it is hereby notified that for the above purpose eight pieces of land comprising portions of cadastral plot Nos. 174, 176, 189 and 995 of village Gangajoara and portions of 485, 661, 700 and 704 of village Nayabad and portions of 159 and 43 of village Kheadaha, and altogether measuring, more or less, 0·6942 of an acre, are likely to be required within the aforesaid villages of Gangajoara, Nayabad and Kheadaha.

This notification is made, under the provisions of section 4 of Act I of 1894, to all whom it may concern.

A plan of the land may be inspected in the office of the Chairman, district board, 24-Parganas.

In exercise of the powers conferred by the aforesaid section, the Governor in Council is pleased to authorise the officers for the time being engaged in the undertaking, with their servants and workmen, to enter upon and survey the land and do all other acts required or permitted by that section.

Any person interested in the above land, who has any objection to the acquisition thereof, may, within thirty days after the date on which public notice of the substance of this notification is given in the locality, file an objection in writing before the Collector of the 24-Parganas.

Burdwan.—No. 1321L.A. — 21st January 1935.—Whereas it appears to the Governor in Council that land is likely to be required to be taken by Government at the public expense for a public purpose, viz., for constructing distributary No. 6/L of the main canal, from its source to mile 5, chainage 13 and 59 feet, Damodar Canal Project, in the village of Mandalgram, jurisdiction list No. 7 in thana Memari and in the villages of Mulgram, Ujna, Kusumgram and Tajpur, jurisdiction list Nos. 25, 27, 71 and 31, respectively, in thana Manteswar, parganas Shahabad and Satsaika, district Burdwan, it is hereby notified that for the above purpose a piece of land comprising parts of cadastral survey plot Nos. 4239, 4240, 4569, 4572, 4577-4579, 4582, 4583, 4632, 4633, 4635, 4636, 4667, 4670-4673, 4703, 4704, 4707, 4708, 4711, 4714, 4722-4724, 4770, 4775-4777, 4784, 4785, 4796-4798, 4806, 4807, 4820, 6080, 6081, 6090-6093, 6174-6176, 6192-6194, 6201-6203, 6270, 6277-6279, 6295-6300, 6302-6307, 6320, 6324-6326, 6332-6334, 6336-6339, 6383-6388, 6401-6403, 6406-6409, 6412, 6413, 6415, 7044, 7071, 7075-7081, 7083, 7465, 7472, 8588, 8589, 8591, 8592, 9194-9196, 9235-9238, 9240-9243, 9353, 9355-9357, 9360-9363, 9368, 9369, 9371, 9474, 9481-9483, 9485-9488, 9490, 9491, 9508, 9511-9517 and 9524 in mauza Mandalgram, parts of cadastral survey plot Nos. 5118, 5119, 5128-5134, 5156, 5157, 5159-5163, 5167-5169, 5175-5179, 5223, 5224, 5231, 5232, 5234-5236, 5239, 5271, 5392-5395, 5397-5402, 5406, 5409-5411, 5416-5418, 5421, 5530, 5549-5551, 5719, 5720, 5728-5730, 5732-5734, 5738, 5739, 5741, 5742, 5747-5750, 5892 and 5893 in mauza Mulgram, parts of cadastral survey plot Nos. 718-722, 799-803, 806, 821-823, 825, 826, 831, 833-835, 845, 846, 849, 971, 991, 994, 995, 1002, 1010-1012, 1235, 1239, 1240, 1269, 1270, 1272, 1276, 1277, 1279-1282, 1288, 1334-1336, 1338-1340, 1345, 1355-1359, 1398-1400, 1471 and 1476-1478 in mauza Ujna, parts of cadastral survey plot Nos. 369-372, 398, 400, 401, 474, 476, 477, 489, 490, 493, 494, 749, 3003, 3005, 3017, 3021, 3026-3028, 3128, 3129, 3153-3156, 3158, 3159, 3163, 3173, 3175-3177 and 3188-3191 in mauza Kusumgram and parts of cadastral survey plot Nos. 459, 461-464, 468, 1092, 1094, 1096-1098, 1140-1142, 1146, 1149, 1155, 1158, 1160, and 1164-1166 in mauza Tajpur, and measuring, more or less, 29·49 acres, is likely to be required within the aforesaid villages of Mandalgram, Mulgram, Ujna, Kusumgram and Tajpur.

This notification is made, under the provisions of section 4 of Act I of 1894, to all whom it may concern.

A plan of the land may be inspected in the office of the Special Land Acquisition Officer, Burdwan, as well as, in that of the Executive Engineer, Damodar Canal Division, Burdwan.

In exercise of the powers conferred by the aforesaid section, the Governor in Council is pleased to authorise the officers for the time being engaged in the undertaking, with their servants and workmen, to enter upon and survey the land and do all other acts required or permitted by that section.

Any person interested in so much of the above land as are not waste or arable, who has any objection to the acquisition thereof, may, within thirty days after the date on which public notice of the substance of this notification is given in the locality, file an objection in writing before the Collector of of Burdwan.

In exercise of the powers conferred by section 17(*4*) of the Land Acquisition Act, I of 1894, as amended by Act XXXVIII of 1923, the Governor in Council is pleased to direct that the provisions of section 5A of the Act shall not apply to the waste or arable portion of the land in this case.

24-Parganas.—No. 1369L.A.—21st January 1935.—Whereas it appears to the Governor in Council that land is likely to be required to be taken by Government at the public expense for a public purpose, viz., for an approach road from Gholshapur Station to Diamond Harbour Road, in the village of Sahapur, jurisdiction list No. 8, thana Behala, pargana Magura, district 24-Parganas, it is hereby notified that for the above purpose a piece of land comprising cadastral plot Nos. 154 and 155 and portions of cadastral plot Nos. 137, 138, 153, 156, 167 and 168, and measuring, more or less, 0·348 of an acre, is likely to be required within the aforesaid village of Sahapur.

This notification is made, under the provisions of section 4 of Act I of 1894, to all whom it may concern.

A plan of the land may be inspected in the office of the Land Acquisition Collector, 24-Parganas.

In exercise of the powers conferred by the aforesaid section, the Governor in Council is pleased to authorise the officers for the time being engaged in the undertaking, with their servants and workmen, to enter upon and survey the land and do all other acts required or permitted by that section.

Any person interested in the above land, who has any objection to the acquisition thereof, may, within thirty days after the date on which public notice of the substance of this notification is given in the locality, file an objection in writing before the Collector of 24-Parganas.

ERRATUM.

Howrah. — No. 1309L.A. — 21st January 1935.—In line 6 of the notification No. 5996-L.A., dated 14th May 1934, under section 4 of the Land Acquisition Act, published at page 715, Part I of the *Calcutta Gazette* of the 17th idem, in respect of the proposed acquisition of ·1459 of an acre of land required by the Calcutta Electric Supply Corporation, Limited, for construction of Howrah-West Sub-Station in the village of Bantra-Dakshin, pargana Boro, district Howrah, *substitute* "Distributing Station" *for* "Sub-Station."

DECLARATIONS.

Calcutta. — No. 1061L.A.—17th January 1935.—Whereas it appears to the Governor in Council that land is required to be taken by Government at the expense of the Calcutta Improvement Trust for a public purpose, viz., for alignment No. VI (Ahiritola Diagonal) of the Calcutta Improvement Trust in Ward No. 2 of the Calcutta Municipality in the city of Calcutta, it is hereby declared that for the above purpose a piece of land, comprising premises Nos. 4, Dattapara Lane and 4, Mohammad Ramjan Lane, and measuring, more or less, 0·1322 of an acre, bounded on the—

North—By Dattapara Lane,

East—By premises No. 5, Dattapara Lane acquired for the Calcutta Improvement Trust,

South—By Mohammad Ramjan Lane,

West—By premises No. 6A, Mohammad Ramjan Lane and No. 3A, Dattapara Lane,

is required within the aforesaid Ward No. 2 of the Calcutta Municipality in the city of Calcutta.

This declaration is made, under the provisions of section 6 of Act I of 1894, to all whom it may concern.

A plan of the land may be inspected in the office of the Second Land Acquisition Collector, at No. 5, Bankshall Street, Calcutta.

Burdwan. — No. 1147L.A.—18th January 1935.—Whereas it appears to the Governor in Council that land is required to be taken by Government at the public expense for a public purpose, viz., for constructing road approaches of the cart bridge at mile 4 chainage 4 and 88 feet of Distributary No. 9, Branch Canal, Damodar Canal Project, in the village of Khurul, jurisdiction list No. 46, thana Bhatar, pargana Burdwan, district Burdwan, it is hereby declared that for the above purpose two pieces of land comprising parts of cadastral survey plot No. 342 and altogether measuring, more or less, 0·03 of an acre, are required within the aforesaid village of Khurul.

This declaration is made, under the provisions of section 6, Act I of 1894, to all whom it may concern.

A plan of the land may be inspected in the office of the Special Land Acquisition Officer, Burdwan, as well as in that of the Executive Engineer, Damodar Canal Division, Burdwan.

Burdwan.—No. 1210L.A.—19th January 1935.—Whereas it appears to the Governor in Council that land is required to be taken by Government at the public expense for a public purpose, viz., for constructing the road approaches to bridge at mile 4, chanage 47 and 15 feet, of distributary No. 6/B, main canal, Damodar Canal project, in the villages of Saligram and Nabastha, jurisdiction list Nos. 23 and 31, respectively, thana Memari, pargana Shahabad, district Burdwan, it is hereby declared that for the above purpose four pieces of land comprising parts of cadastral survey plots Nos. 2037 and 2038 in mauza Saligram and parts of cadastral survey plots Nos. 232, 234 and 235 in mauza Nabastha and altogether measuring, more or less, 0·13 of an acre, are required within the aforesaid villages of Saligram and Nabastha.

This declaration is made, under the provisions of section 6 of Act 1 of 1894, to all whom it may concern.

A plan of the land may be inspected in the office of the Special Land Acquisition Officer, Burdwan, as well as in that of the Executive Engineer, Damodar Canal Division, Burdwan.

Jalpaiguri.—No. 1213L.A.—19th January 1935.—Whereas it appears to the Governor in Council that land is required to be taken by Government at the expense of the Jalpaiguri Municipality for a public purpose, viz., for the extension of the trenching ground in Ward No. V in the village of Kharia, pargana Baikunthapur, zilla Jalpaiguri, it is hereby declared that for the above purpose a piece of land, comprising parts of cadastral plots Nos. 4 and 5, sheet No. 9, and measuring, more or less, 5·00 acres, is required within the aforesaid village of Kharia.

This declaration is made, under the provisions of section 6 of Act I of 1894, to all whom it may concern.

A plan of the land may be inspected in the office of the Deputy Commissioner of Jalpaiguri.

Jalpaiguri. — No. 1315L.A.—21st January 1935.—Whereas it appears to the Governor in Council that land is required to be taken by Government at the expense of the Jalpaiguri Municipality for a public purpose, viz., for a methar busty in the village of Kharia, pargana Baikunthapur, zilla Jalpaiguri, it is hereby declared that for the above purpose two pieces of land comprising parts of cadastral plot Nos. 1921 and 2179, sheet No. 8, and altogether measuring, more or less, 2·83 acres, bounded on the—

Block A:

North—By cadastral plot Nos. 1911, 1912, 1917 and 1916, sheet No. 8,

East—By cadastral plot Nos. 2179 and 1921, sheet No. 8,

South—By cadastral plot No. 2106, sheet No. 8,

West—By cadastral plot Nos. 2179 and 1921, sheet No. 8,

Block B:

North, East and South—By cadastral plot No. 2179, sheet No. 8,

West—By cadastral plot No. 1906, sheet No. 8,

are required within the aforesaid village of Kharia.

This declaration is made under the provisions of section 6 of Act I of 1894, to all whom it may concern.

A plan of the land may be inspected in the office of the Deputy Commissioner of Jalpaiguri.

Burdwan.—No. 1366L.A.—21st January 1935.—Whereas it appears to the Governor in Council that land is required to be taken by Government at the public expense for a public purpose, viz., for constructing the portion of distributary No. 6 from chainage 96,089 feet to 105,433 feet, main canal, Damodar Canal Project, in the villages of Mandalgram and Barapalashan, jurisdiction list Nos. 7 and 8, respectively, in thana Memari, pargana Shahabad, district Burdwan, it is hereby declared that for the above purpose two pieces of land comprising part of cadastral plot No. 7245 in mauza Mandalgram and part of cadastral survey plot No. 18 in mauza Barapalashan and altogether measuring, more or less, 0·19 of an acre, are required within the aforesaid villages of Mandalgram and Barapalashan.

This declaration is made, under the provisions of section 6 of Act I of 1894, to all whom it may concern.

A plan of the land may be inspected in the office of the Special Land Acquisition Officer, Burdwan, as well as in that of the Executive Engineer, Damodar Canal Division, Burdwan.

Excise.

NOTIFICATIONS.

Minister-in-charge: The Hon'ble Sir Bijoy Prasad Singh Roy, Kt.

Noakhali-Tippera. — No. 35Ex. — 14th January 1935.— Maulvi Muhammad Abdullah, Inspector of Excise and Salt in charge of Noakhali and Tippera districts, is allowed leave on average pay, under rule 81 (*b*) (*ii*), of the Fundamental Rules, for two months, with effect from the 3rd January 1935, or any subsequent date on which he may avail himself of the leave.

Calcutta. — No. 38Ex. — 14th January 1935.—Maulvi Motahar Husain Khan, Superintendent of Excise and Salt in charge of the Central Detective Department, Bengal, is allowed leave on average pay for one month and six days, with effect from the 21st January 1935, under rule 81 (*b*) (*ii*) of the Fundamental Rules.

Tippera - Noakhali. — No. 41Ex. — 14th January 1935.—Maulvi Muhammad Abdullah, Inspector of Excise and Salt in charge of Tippera and Noakhali districts, was on leave on average pay, under rule 81 (*b*) (*ii*) of the Fundamental Rules, for six days, with effect from the 19th November 1934.

O. M. MARTIN,

Secy. to the Govt. of Bengal.

TREASURY NOTICES.

Jessore, the 2nd January 1935.

Uncovenanted Deputy Collector Babu Sukumar Chatterjee has been placed in executive charge of the Jessore Treasury with effect from the forenoon of the 2nd January 1935 and is authorised to draw bills on other treasuries.

N. K. SEN, *Collector.*

Alipore, the 15th January 1935.

Uncovenanted Deputy Collector Babu Satish Chandra Ghosh has been placed in executive charge of the district treasury at Alipore, 24-Parganas, and he is authorised to draw bills on other treasuries.

S. N. ROY, *Addl. Collector.*

Orders by the Deputy Accountant-General, Bengal.

The Treasury, the 18th January 1935.

It is notified that the refund order No. 4757 containing 50 orders "White" is in use by the Income-tax Office, Military Circle, Meerut, with effect from the 12th January 1935.

A. R. REBELLO,
Dy. Accountant-General, Bengal.

SHERIFF'S OFFICE.

The 17th January 1935.

Notice is hereby given that the First Criminal Sessions of the year 1935 of the High Court of Judicature at Fort William in Bengal for the town of Calcutta and factory of Fort William and the places subordinate thereto, will be held at the Court House, in the town of Calcutta, on Monday, the 18th day of February next, at 11 o'clock in the forenoon, and thenceforward from day to day until the said sessions be over. And it is hereby proclaimed that all persons who are to prosecute any of the prisoners to be brought up for trial at the said sessions be present then and there to prosecute.

A. H. GHUZNAVI, *Sheriff.*

সরিফ আফিস, সন ১৯৩৫ সালের ১৭ই জানুয়ারী।

সকলকে সমাচার দেওয়া যাইতেছে যে, সুবে বাঙ্গালার ফোর্ট উইলিয়ম দুর্গের অধীনে সহর কলিকাতার ও অন্যান্য স্থানের ফৌজদারী বিচার নিষ্পত্তি জন্য আগামী সন ১৯৩৫ সালের ১৮ই ফেব্রুয়ারী সোমবার বেলা ১১ ঘটিকার সময় এবং যে পর্য্যন্ত সেসিয়নের কার্য্য সমাধা না হয়, প্রতিদিন উক্ত সময়ে কলিকাতার হাইকোর্টের আপন আদালত ঘরে সন ১৯৩৫ সালের প্রথম ক্রিমিন্যাল সেসিয়ন বসিবেক, এবং এতদ্বারা প্রচার করা যাইতেছে যে, যে সকল ব্যক্তি কোন কয়েদীর বিরুদ্ধে কোন ফৌজদারী মিছিল করিবেক, তাহারা উক্ত স্থানে উক্ত সময়ে হাজির থাকিয়া মোকদ্দমা করে। ইতি।

এ, এইচ, গজনাভি,
সরিফ।

HIGH COURT NOTICE.

English Department—Civil.

The 14th January 1935.

No. 733A.—In exercise of the powers delegated to the High Court by the notification of the Government of Bengal, No. 64J.D., dated the 30th April 1915, Babu Narayan Chandra Basu, munsif of Chittagong (Sadar), is vested, under article 8 of the Second Schedule of the Provincial Small Cause Courts Act, 1887 (IX of 1887), with powers to try, under the Small Cause Court procedure, suits up to the value of Rs. 250 for the recovery of rents of homestead lands arising within the municipal area within his jurisdiction.

By order of the High Court,

N. L. HINDLEY, *Registrar.*

ORDERS BY COMMISSIONERS OF DIVISIONS.

Burdwan Division—Chinsura.

No. 63L.S.-G.—12th January 1935.—It is hereby notified for general information that, under section 19 (*1*) of the Bengal Local Self-Government Act (Bengal Act III of 1885), Babu Bhudhar Chandra Mukhopadhyay has been duly elected to be a member of the Sadar local board in the district of Burdwan, *vice* Babu Batuk Nath Bhattacherji, deceased.

No. 142J.G.—12th January 1935.—In accordance with the provisions of rule 63(*2*) of Chapter IV of the Bengal Jail Code, Volume I, I hereby re-appoint the following gentlemen to be non-official visitors of the Serampore Subsidiary Jail in the district of Hooghly for a period of two years with effect from the 20th March 1935:—

Rai Mahendra Chandra Lahiri Bahadur.
Babu Purna Chandra Chatterjee.

No. 241J.G.—17th January 1935.—Babu Dhirendra Nath Mukherjee, Sub-Deputy Collector, Midnapore Sadar, is transferred temporarily to the Rampurhat subdivision of the Birbhum district for employment on general duty. The transfer is made in the public interest.

L. B. BURROWS, *Commissioner.*

Howrah, the 15th January 1935.

It is hereby notified for general information that, under section 6 (*3*) of the Bengal Village Self-Government Act, 1919 (Bengal Act V of 1919), read with section 13 of the Act, Babu Hari Charan Maity of village Sureekhali, police-station Bauria, post-office Panchla, has been appointed to be a member of the Basudebpur union board in police-station Bauria in the Uluberia subdivision of the Howrah district, *vice* Babu Akshoy Kumar Mandal, deceased.

L. G. DURNO, *District Magistrate.*

Birbhum, the 17th January 1935.

No. 21L.S.-G.—It is hereby notified for general information that—

(*a*) under sub-section (*2*) of section 6 of the Bengal Village Self-Government Act, 1919 (Bengal Act V of 1919), the following gentlemen have been duly elected to be members of the Mangaldihi union board in police-station Illambazar in the Sadar subdivision of the Birbhum district:—

Ward No. I.

Babu Ram Renu Chatterji.

Babu Paran Gorain.

Babu Bholanath Dutta.

Ward No. II.

Sheikh Muslim.

Abdulla Mondal.

Babu Kishori Mohan Rus.

(*b*) Under sub-section (*3*) of section 6 of the Act, the following gentlemen have been nominated to be members of the aforesaid union board:—

Maulvi Ahamad Hossen Molla.

Sheikh Allarakha *alias* Rakhu.

Maulvi Aolad Mondal.

K. L. MUKHARJI, *District Magistrate.*

Orders by the Deputy Inspector-General of Police, Burdwan Range.

Chinsura.—No. 514.—18th January 1935.—Sub-Inspector Radha Binod Ray of Hooghly is appointed to act as Inspector, *vice* Babu Kiran Chandra Sen, Inspector, Hooghly, appointed to act as Deputy Superintendent of Police.

E. B. JONES,

Deputy Inspector-General of Police.

Chittagong Division—Chittagong.

No. 161G.—14th January 1935.—Maulvi Hafizul Hoq, probationary Sub-Deputy Collector, Tippera, is allowed leave on average pay for three weeks, under rule 81 (*b*) (*ii*) of the Fundamental Rules, with effect from the 2nd January 1935.

H. GRAHAM, *Commissioner (offg.).*

Tippera, the 11th January 1935.

No. 269M.—It is hereby notified for general information that, under section 13 of the Bengal Village Self-Government Act, 1919, read with section 6(*3*) and rule 36 of the rules for the election and appointment of members of union boards, Maulvi Abidur Rahman has been appointed as a member of Shajdapur union board No. 8 of Sarail police-station in the Brahmanbaria subdivision of the district of Tippera, *vice* Maulvi Nurul Hoque, whose appointment has been set aside by the Civil Court.

A. HYE, *Addl. District Magistrate.*

Noakhali, the 12th January 1935.

Under rule 32A of the election rules under the Local Self-Government Act, it is notified for general information that the 4th, 5th and 6th February 1935 have been fixed for the general election of members for the Sadar local board of Noakhali district in the following thanas:—

Name of thana.	Number of members.	
	General.	Reserved for the minority community.
1. Sudharam ..	1	
2. Hatiya ..	1	1
3. Ramgati ..	1	
4. Sandwip ..	1	
5. Companyganj ..	1	
6. Begamganj ..	2	1
7. Senbagh ..	1	
8. Ramganj ..	1	
9. Lakhipur ..	1	1
10. Raipur ..	1	

2. The result of election shall be declared in the office of the District Magistrate, Noakhali, under rule 43(*A*) (*iii*) at 12 noon on the 11th February 1935.

Noakhali, the 17th January 1935.

Under rule 32A of the election rules under the Local Self-Government Act, it is notified for general information that the 4th, 5th and 6th February 1935 have been fixed for the general election of members for the Feni local board of Noakhali district in the following thanas:—

Name of thana.	Number of members.	
	General.	Reserved for the minority community.
1. Feni ..	2	1
2. Sonagazi ..	1	
3. Chhagalnaiya ..	2	1
4. Parasuram ..	1	

2. The result of election shall be declared in the office of the Subdivisional Officer, Feni, under rule 43(*A*)(*iii*) at 12 noon on the 11th February 1935.

A. WHITTAKER, *District Magistrate.*

Dacca Division—Dacca.

No. 226J.—15th January 1935.—It is hereby notified for general information that, under rule 23 of the manual of rules for the management of charitable hospitals and dispensaries in Bengal, published with Government notification No. 138T.Medl., dated the 7th June 1915, Babu Debendra Prasad Datta is appointed to be a member of the committee for the management of the charitable dispensary at Tetulia, in the district of Mymensingh, in place of Babu Girish Chandra Chakrabarty, resigned.

No. 231J.—15th January 1935.—It is hereby notified for general information that at the by-election held on 1st December 1934, Babu Kamini Kumar De Roy was duly elected to be a Commissioner in ward No. III of the Kishoreganj Municipality, in the district of Mymensingh, *vice* Babu Jogendra Kishore Roy, deceased.

No. 234J.—15th January 1935.—It is hereby notified for general information that at the by-election held on the 1st December 1934, Kazi Maulvi Matiar Rahaman Khan and Babu Jnanendra Kishore Chakravarty have been duly elected to be Commissioners of the Muktagacha Municipality, in the district of Mymensingh, *vice* Maulvi Khandakar Hamidar Rahaman and Babu Dwijendra Kumar Bhattacherjee, M.A., deceased, respectively.

No. 237J.—15th January 1935.—It is hereby notified for general information that, under rule 23 of the manual of rules for the management of charitable hospitals and dispensaries in Bengal, published with Government notification No. 138T.Medl., dated the 7th June 1915, Maulvi Azizul Hoque is appointed to be a member of the committee for the management of the charitable dispensary at Astagram, in the district of Mymensingh, in place of Maulvi Enamul Hoque, deceased.

No. 246J.—16th January 1935.—It is hereby notified for general information that, under rule 63 (*2*) of the Bengal Jail Code, 1919, Miss A. P. Biswas is re-appointed to be a non-official lady visitor of the Mymensingh District Jail for a further period of two years, with effect from the date of this notification.

No. 302J.—18th January 1935.—Maulvi Arshaduzzaman Khan, Sub-Deputy Collector and Circle Officer, Islampur Circle, in the district of Mymensingh, is appointed to be Circle Officer of Bajitpur Circle in Kishoreganj subdivision of that district.

No. 306J.—18th January 1935.—Maulvi Habibur Rahman, Sub-Deputy Collector and Circle Officer, Tangail Circle, in the district of Mymensingh, is appointed to be Circle Officer of Islampur Circle, in Jamalpur subdivision of that district.

No. 310J.—18th January 1935.—Babu Dwijendra Kumar Mukharji, Sub-Deputy Collector and Circle Officer, Bajitpur Circle, in the district of Mymensingh, is appointed to be Circle Officer of Tangail Circle in that district.

W. H. NELSON, *Commissioner.*

Mymensingh, the 10th January 1935.

It is notified for general information that Babu Monoranjan Choudhury, Deputy Magistrate, Jamalpur, is appointed a member of the managing committee of the Jamalpur Government High School, *vice* Babu P. C. Majumdar, transferred.

Mymensingh, the 12th January 1935.

No. 13C.—It is hereby notified for general information that, under section 13 of the Bengal Village Self-Government Act, 1919 (Bengal Act V of 1919), Mohammed Osman Munshi has been duly elected to be a member of Haluaghat union board No. IV in Haluaghat police-station in the Sadar North subdivision of the Mymensingh district, *vice* member Ekin Ali Sarker, deceased.

No. 14C.—It is hereby notified for general information that, under section 13 of the Bengal Village Self-Government Act, 1919 (Bengal Act V of 1919), Babu Hem Chandra Sarker has been duly elected to be a member of Narail union board No. VIII in Haluaghat police-station in the Sadar (North) subdivision of the Mymensingh district, *vice* member Shaha Eakub Ali Fakir, deceased.

Mymensingh, the 14th January 1935.

No. 20C.—It is hereby notified for general information that—

(*a*) Under sub-section (*2*) of section 6 of the Bengal Village Self-Government Act, 1919 (Bengal Act V of 1919), the following gentlemen have been duly elected to be members of the undermentioned union boards in the Sadar North subdivision of the Mymensingh district:—

Police-station Phulpur.

I. Sandhara union board.

Tamizuddin Ahamed.
Tamizuddin Fakir.
Abdul Hamid Master.
Abu Taher Choudhury.
Abed Ali Sarkar.
Ibrahim Sarkar.

II. Rambhadrapur union board.

Imamuddin Ahamed.
Abdur Rahaman.
Mea Baksha Sarkar.
Badiazzaman Sarkar.
Kadir Mahmud Talukdar.
Ibrahim Sarkar.

III. Bhaitkandi union board.

Md. Sadat Ali Sarkar.
Mafizuddin Ahamed.
Shaha Osimuddin Ahamed.
Samiruddin Ahamed.
Kudrat Ali Munshi.
Md. Alam Sarkar.

IV. Singheswar union board.

Mafizuddin Talukdar.
Umesh Chandra Pal Sarkar.
Nur Hossain Sarkar.
Abdul Karim Khan.
Atar Ali Sarkar.
Uma Charan De Sarkar.

V. Phulpur union board.

Jnan Chandra Talukdar.
Mafizuddin Ahamed.
Debendra Kishore Roy.
Abdur Rahaman Khan.
Maniruddin Ahamed.
Md. Moidhar Sarkar.

VI. Payari union board.

Asutosh Choudhury.
Md. Ismail.
Aptabuddin Fakir.
Abdul Hakim.
Adam Sarkar.
Samiruddin Sarkar.

VII. Rahimganj union board.

Rostam Ali Choudhury.
Abed Ali Master.
Ishaq Ali Sarkar.
Nabi Hossain Munshi.
Mobarak Ali Sarkar.
Haji Maminuddin Sarkar.

VIII. Balikhan union board.

Alamuddin Sarkar.
Md. Abdul Jalil Mea.
Md. Nabi Hossain Sarkar.
Md. Abdul Mazid Sarkar.
Md. Mea Hossain Chakdar.
Mamrujuddin Sarkar.

IX. Kakni union board.

Bidhu Bhuson Bhattacherjee, B.A.
Apsaruddin Ahmed Kabya Bhusan.
Abdul Latif Master.
Dina Nath Bhaumik.
Mudrat Mir.
Ali Newaj Sarkar.

X. Rupshi union board.

Kalimuddin Fakir.
Yusuf Ali Fakir.
Mafizuddin Ahamed.
Syed Abdul Gafar.
Jagat Chandra Choudhury.
Hanifuddin Sarkar.

XI. Balia union board.

Akshoy Kumar Sarkar.
Mafizuddin Talukdar.
Jonab Ali Sarkar.
Hafizuddin Sarkar.
Serajul Huq.
Mahim Chandra Sarkar.

XII. Bowla union board.

Imam Hossain Khan.
Ahamad Ali Fakir.
Md. Makimuddin Khan.
Imad Ali Talukdar.
Sarat Chandra De Sarkar.
Obeidulla Talukdar.

XIII. Dhakua union board.

Umesh Chandra Dhar Roy.
Kailash Chandra Dhar Roy.
A. K. M. Abdul Hye *alias* Mirja Ali Master.
Jalim Sarkar.
Shyama Charan Bhomik.
Durga Charan De Sarkar.

XIV. Banihala union board.

Taranath Kar.
Md. Taheruddin Sarkar.
Elahi Baksha Khondakar.
Sultan Hossein Khondakar.
Devidas Mazumdar.
Mahananda Sarkar.

XV. Tarakanda union board.

Kunja Lal Singha Roy.
Erfan Ali Sarkar.
Jalimuddin Sarkar.
Mahar Ali Sarkar.
Jogesh Chandra Sarkar.
Asmat Ali Sarkar.

XVI. Galagaon union board.

Nawabali Biswas.
Sudhir Chandra Biswas.
Sachu Sarkar.
Mafizuddin Ahmed.
Momenali Sarkar.
Ismat Ali Ahmed.

XVII. Kamargaon union board.

Mafizuddin Khan.
Bataruddin Sarkar.
Dr. Birendra Chandra Dhar.
Md. Azizul Hossein Biswas.
Surendra Chandra Sarkar.
Samiruddin Mandal.

XVIII. Sidhla union board.

Md. Gunjar Ali Sarkar.
Suresh Chandra Talukdar.
Upendra Kishore Nandy.
Maulvi Md. Ismail.
Tamizuddin Talukdar.
Shaizuddin Talukdar.

XIX. Rampur union board.

Basiruddin Master.
Ibrahimuddin Talukdar.
Sadiruddin Sarkar.
Apsar Fakir.
Shadan Bepari.
Ashraf Ali Munshi.

XX. Kamari union board.

Faizuddin Ahamed Talukdar.
Md. Keramat Ali Fakir.
Md. Maniruddin Sarkar.
Maulvi Md. Amiruddin, B.L.
Md. Umed Ali Sarkar.
Imam Ali Sarkar.

XXI. Bishka union board.

Md. Asmali Sarkar.
Dil Mohammed Khan.
Shammat Ali Sarkar.
Amsaruddin Talukdar.
Md. Abbas Ali Talukdar.
Amiral Hossain Akanda.

(*b*) Under sub-section (*3*) of section 6 of the Bengal Village Self-Government Act, 1919 (Bengal Act V of 1919), the following gentlemen have been appointed by the District Magistrate of Mymensingh to be members of the undermentioned union boards in the Sadar North subdivision of the Mymensingh district:—

Police-station Phulpur.

I. Sandhara union board.

Members nominated.

Monmohan Nag.
Rusmat Ali.
Jainuddi Mondal.

II. Rambhadrapur union board.

Madhu Sudhan Modak.
Abdul Kaher Sarkar.
Kitab Ali Sarkar.

III. Bhaitkandi union board.

Radha Charan Sarkar.
Syed Azimuddin.
Thakurdas Kapali.

IV. Singheswar union board.

Ali Mahmud Sarkar.
Hari Charan De Sarkar.
Nazar Ali Sheik.

V. Phulpur union board.

Basiruddin Sarkar.
Amiruddin Sarkar.
Prabhat Chandra Datta.

VI. Payari union board.

Gaya Nath De Sarkar.
Mahesh Chandra Sarkar.
Md. Reajuddin Ahmed.

VII. Rahimganj union board.

Khoda Baksha Sarkar.
Nasarat Khan.
Jitendra Chandra Acherjee.

VIII. Balikhan union board.

Surendra Nath Sarkar, B.L.
Md. Arfan Ali Sarkar.
Purna Chandra Sarkar.

IX. Kakni union board.

Md. Mafizuddin Master.
Sadak Ali Sarkar.
Iswar Chandra Pal Roy.

X. Rupshi union board.

Gour Sundar Datta.
Uzir Ali Fakir.
Taleh Hossain Sarkar.

XI. Balia union board.

Mirza Samsher Beg.
Gopal Mondal.
Intaz Khan.

XII. Bowla union board.

Shaha Man Ali Fakir.
Mobarak Ali Mridha.
Amulya Chandra Roy, M.A.

XIII. Dhakua union board.

Tamizuddin Sarkar.
Kadar Ali Sarkar.
Md. Syed Ali Sarkar.

XIV. Banihala union board.

Arman Beg.
Injar Ali Sarkar.
Jafar Ali Talukdar.

XV. Tarakanda union board.

Meheruddin Khan.
Fazaruddin Akanda.
Swarup Chandra Pal.

XVI. Galagaon union board.

Bepin Chandra Bhattacharjee.
Dil Md. Sarkar.
Md. Hyderali.

XVII. Kamargaon union board.

Hafezuddin Sarkar.
Md. Mamud Ali Sarkar.
Ramkumar Sarkar.

XVIII. Sidhla union board.

Syed Kamardowla.
Radha Charan Dev Nath.
Didar Ali Mandal.

XIX. Rampur union board.

Saripuddin Talukdar.
Syed Sabirul Hossein.
Rajani Kanta De Sarkar.

XX. Kamari union board.

Durga Charan De Sarkar.
Mahim Chandra De Sarkar.
Md. Reasat Sarkar.

XXI. Bishka union board.

Imam Hossain Tarafdar.
Kumud Chandra Saha Roy.
Rajendra Chandra Banda.

Mymensingh, the 17th January 1935.

No. 28C.—It is hereby notified for general information that, under section 13 of the Bengal Village Self-Government Act (Bengal Act V of 1919), read with rule 35 of the rules for the election and appointment of members of union boards, etc., Maulvi Md. Amzad Bhuyan has been duly elected to be a member of the Balasimul union board in police-station Kendua in the Netrakona subdivision of the Mymensingh district, *vice* Maulvi Muktal Hussain Talukdar, removed.

T. M. Dow, *District Magistrate.*

Faridpur, the 12th January 1935.

No. 348J.—It is hereby notified for general information that, under section 13 of the Bengal Village Self-Government Act (Act V of 1919), Babu Ram Krishna Das has been appointed by the District Magistrate of Faridpur as a member of the Paikpara union board in police-station Rajoir in the Madaripur subdivision of the Faridpur district, *vice* Babu Kunja Behari Poddar, deceased.

M. S. BAKHT, for *District Magistrate.*

Presidency Division—Calcutta.

Orders by the Deputy Inspector-General of Police, Intelligence Branch.

Calcutta.—No. 108.—17th January 1935.—Sub-Inspector Jogesh Chandra Mukharji is appointed to act as Inspector with effect from 8-11-1934, a.m., *vice* Babu Santosh Lal Chatarji, officiating Inspector, granted leave.

Sub-Inspector Sushil Kumar Basu was appointed to act as Inspector from 5-11-1934, a.m. to 22-12-1934, p.m., *vice* Rai Sahib Upendra Nath Datta, Inspector, acted as Deputy Superintendent of Police.

Sub-Inspector Sushil Kumar Basu is appointed to act as Inspector with effect from 2-1-1935, a.m., *vice* Rai Sahib Upendra Nath Datta, Inspector, appointed to act as Deputy Superintendent of Police.

C. E. S. FAIRWEATHER,
Deputy Inspector-General of Police (offg.).

Rajshahi Division—Jalpaiguri.

No. 17J.R.—17th January 1935.—It is hereby notified under rule 19(*5*) of the Legislative Assembly Electoral Rules that Mr. K. Ahmed, Bar.-at-Law, a duly nominated candidate in the Rajshahi Division Muhammadan Constituency of the Legislative Assembly, has lodged his return of election expenses and declarations with the Returning Officer on the 10th January 1935. They can be inspected in the office of the Commissioner, Rajshahi Division, in office hours on payment of a fee of Re. 1.

F. W. ROBERTSON, *Commissioner,*
Rajshahi Division, and Returning Officer.

Malda, the 22nd November 1934.

Under rule 32A of the election rules under the Local Self-Government Act, it is notified for general information that the 7th February 1935 and the 9th February 1935 have been fixed for the general election of members for the Malda local board in the following thanas:—

Name of thana.	Number of members.
English Bazar-Bholahat	... 1
Kaliachak	... 1
Manikchak-Ratua	... 1
Shibganj-Kaliachak	... 1
Shibganj	... 1
Nawabganj	... 1
Nachole-Gomastapur	... 1
Malda-Habibpur	... 1
Gazole-Bamongola	... 1
Kharba	... 1
Harischandrapur	... 1
Ratua	... 1

J. N. TALUKDAR, *District Magistrate.*

Malda, the 9th January 1935.

It is hereby notified for general information that, under section 13 of the Bengal Village Self-Government Act, 1919 (Bengal Act V of 1919), Maulvi Meherulla Haji has been appointed to be a member of the Sambalpur union board in police-station Ratua in the district of Malda, *vice* Munshi Haji Musa Ali, deceased.

[ILLEGIBLE], for *District Magistrate.*

Orders by the Deputy Inspector-General of Police, Rajshahi Range.

Jalpaiguri.—No. 231.—11th January 1935.—Babu Durgesh Chandra Basu, officiating Inspector, Malda, was granted 8 day's leave on average pay, under rule 81 (*b*) (*ii*) of the Fundamental Rules, with effect from the 8th November 1934.

No. 520.—18th January 1935.—Khan Sahib Maulvi Sagar Khan, Armed Inspector, Pabna, is granted 1 month's leave on average pay, under rule 81 (*b*) (*ii*) of the Fundamental Rules, in extension of the leave already granted to him.

The existing acting arrangement will continue.

The unexpired portion (*i.e.*, 8 days) of leave granted to Babu Ananta Prasad Das, office Inspector, Bogra, under notification No. 51, dated the 4th January 1935, published in the *Calcutta Gazette*, dated the 17th January 1935, is cancelled.

F. P. WALKER,
Deputy Inspector-General of Police.

Registered No. C207

The Calcutta Gazette

THURSDAY, JANUARY 24, 1935.

PART IA

Orders and Notifications by the Government of India republished for general information.

FOREIGN AND POLITICAL DEPARTMENT.

NOTIFICATIONS.

New Delhi, the 9th January 1935.

No. 49-G.—With reference to notification No. 569-G., dated the 14th November 1934, the provisional recognition of the appointment of Mr. Rufus H. Lane, Jr., as a Consul for the United States of America at Calcutta has been confirmed by His Majesty's Government.

No. 50-G.—With reference to notification No. 592-G., dated the 20th November 1934, the provisional recognition of the appointment of Mr. Edward M. Groth, as a Consul for the United States of America at Calcutta, has been confirmed by His Majesty's Government.

H. A. F. METCALFE,
Foreign Secy. to the Govt. of India.

ARMY DEPARTMENT.

New Delhi, the 12th January 1935.

Part B.

No. 13.—The following promotions are made:—

AUXILIARY FORCE, INDIA.

The Bengal Artillery.

Capt. to be Maj.

T. G. Morrow. Dated 2nd Dec. 1934.

* * * * *

G. R. F. TOTTENHAM,
Secy. to the Govt. of India.

NAVY DEPARTMENT.

New Delhi, the 12th January 1935.

PROMOTIONS.

No. 1. The following promotions are made in the Royal Indian Marine, subject to His Majesty's approval, with effect from the date specified against each:—

* * * * * *

(C) To be Engineer Commander.

* * * * * *

(*iii*) Engr. Lt.-Commdr. J. E. Moloney, *vice* Engr. Commdr. R. S. Baskett, retired. Dated 19th Dec. 1931.

(Marine Department Notifications Nos. 1 and 8 of 1932, Nos. 1, 5 and 8 of 1933, and No. 1 of 1934 are hereby cancelled.)

G. R. F. TOTTENHAM,
Secy. to the Govt. of India.

FINANCE DEPARTMENT (CENTRAL REVENUES).

NOTIFICATIONS.

CUSTOMS.

New Delhi, the 12th January 1935.

No. 9.—In exercise of the powers conferred by section 19 of the Sea Customs Act, 1878 (VIII of 1878), the Governor-General in Council is pleased to direct that the following amendment shall be made in the notification of the Government of India in the Finance Department (Central Revenues) No. 47-(Customs), dated the 9th September 1933, namely:—

In the proviso to the said notification after the word "letters", wherever it occurs, the words "or packets" shall be inserted.

A. J. RAISMAN,
Joint Secy. to the Govt of India.

SALT.

The 12th January 1935.

No. 1.—In exercise of the powers conferred by clause (*b*) of section 7 of the Indian Salt Act, 1882 (XII of 1882), and in supersession of the notification of the Government of India in the Finance Department (Central Revenues), No. 4, dated the 4th February 1928, the Governor-General in Council is pleased to remit the duty imposed under clause (*a*) of the said section on salt manufactured in or imported by land into the territories within the jurisdiction of the Commissioner, Northern India Salt Revenue, hereinafter referred to as the Commissioner, or with the special approval of the Governor-General in Council, within any other place, when such salt is used within those territories for any industrial purpose other than the preparation of refined salt or black salt otherwise known as saunchal salt, or as an ingredient, or preservative in any article of food or drink, subject to the following rules:—

1. Any person intending to use salt in an industrial process (hereinafter referred to as the manufacturer) and wishing to be admitted to the concession shall make an application to the Commissioner stating the industrial purpose for which he intends to use the salt and the approximate quantity of salt required in the year. If he wishes the concession to extend to more than one factory or works, a separate application shall be made for each such factory or works. A concession granted for one factory will not be transferred to another factory. If he intends to use any salt other than salt educed in the manufacture of saltpetre, for which a special low rate of duty has been fixed he must apply for sanction of the Commissioner, stating the reasons why such educed salt is not suitable for his purposes.

2. If the application is sanctioned, the manufacturer shall pay a supervision fee of Rs. 100 (Rupees one hundred) to cover the cost of requisite inspections and any other departmental expenses involved; provided that no fee shall be payable by a manufacturer admitted to the concession described in these rules who has already paid a fee in respect of his admission to a similar concession under Article 2 in part 1 of Schedule II to the Indian Tariff Act, 1894 (VIII of 1894), provided also that if the concession is granted after six months of a financial year have expired, the supervision fee payable for the said year shall be Rs. 50 (Rupees fifty only) and that if the full annual fee of Rs. 100 (Rupees one hundred only) has been paid and a concession is surrendered before the expiry of six months of a financial year or in the case of a new grantee within six months of the grant, Rs. 50 (Rupees fifty only) shall be refunded.

All fees payable under the rules shall be deposited in the nearest district treasury under the head "III—Salt—Miscellaneous", and the treasury receipt forwarded to the Assistant Commissioner, Northern India Salt Revenue, in whose jurisdiction the factory or works are situated, hereinafter referred to as the Assistant Commissioner. The rebate of duty will only be allowed on salt used from the date of deposit of the inspection fee into the treasury.

3. After making this payment the manufacturer shall, in the first instance, provide himself with duty-paid salt from a salt works, depot or from a firm of salt dealers approved by the Commissioner. At the close of each half year the manufacturer shall submit to the Assistant Commissioner an application for the refund of the duty on the salt used, supported by the receipt of the firm from which the salt has been purchased, or by the permits issued for the removal of the salt, as the case may be. Receipts which must be in the form prescribed by these rules (Form No. A) will not be returned to the manufacturer. A stamped receipt for the amount claimed will be submitted in advance, along with the application for refund. On receipt of the cheque for the amount of rebate claimed, the firm will submit an unstamped receipt to the Assistant Commissioner in acknowledgment of having received the cheque.

4. For the purpose of these rules duty on salt purchased in the market shall be deemed to have been paid at the rate in force on the date of purchase.

5. (1) The application for refund of duty shall contain the following particulars:—

(i) the balance of salt in store at the beginning of the half year;
(ii) the quantity of salt purchased during the half year;
(iii) the quantity of salt used during the half year and the quantity on which a refund of duty is applied for;
(iv) the balance of salt in store at the close of the half year;
(v) the quantity, weight and such other details of products manufactured during the half year as may be required by the Assistant Commissioner;
(vi) a declaration stating the product manufactured and the name and situation of the factory or works, and that the salt on which a refund of duty is applied for has been used *bona fide* by the applicant in the process of manufacture of such product and has not been used for any other purposes.

(2) The particulars entered in accordance with clauses (i), (ii), (iii) and (iv) of sub-rule (1) shall distinguish between salt on which duty has been paid, or is deemed under Rule 4 to have been paid, at different rates.

6. On receipt of the application for refund, the Assistant Commissioner shall make such enquiry as he thinks fit and when satisfied that the figures contained in the application are correct shall issue orders for the refund of the duty on the salt used in the process of manufacture. In the absence of special sanction from the Commissioner under Rule 1, duty shall not be refunded at a higher rate than that leviable on salt educed in the manufacture of salpetre at the date of purchase of the salt. A return shall be submitted monthly by the Assistant Commissioner to the Commissioner giving a list of the refunds sanctioned. On receipt of these returns, the Commissioner may order such further enquiry as he considers necessary.

7. The manufacturer shall provide and set apart, for the storage of salt purchased for use in the factory or works, a store-room, which shall be, to the satisfaction of the Assistant Commissioner, securely constructed and fitted with a strong door capable of being locked. Salt manufactured within British India and salt imported by sea shall be stored separately in the store-room, as also shall salt on which duty has been paid, or is under Rule 4 deemed to have been paid, at different rates.

8. (1) The store-room shall not be opened except between the hours of sunrise and sunset and then only for one of the following purposes, namely:—

(*a*) for the receipt of salt into store;

(*b*) for the preparation by grinding or for the issue of salt required for purposes connected with manufacture;

(*c*) to allow the stock of salt to be checked by weighment or otherwise by an officer of the Salt Department deputed for the purpose.

(2) The store-room shall not be opened except by or in the presence of the Manager of the factory or works or the store-keeper who shall retain the key in his own possession.

9. All spent-lye or other useless refuse containing salt shall be effectually destroyed on or near the premises in such manner as the Assistant Commissioner may direct.

10. The manufacturer shall maintain a register in Form B, which shall be written up daily and signed by the manufacturer or his manager and which shall show particulars of all salt purchased, expended and stored together with the weight or quantity of products manufactured. Separate registers shall be maintained for salt on which duty has been paid or is under Rule 4 deemed to have been paid at different rates. With the sanction of the Commissioner the weight or quantity of the product manufactured may be written up monthly instead of daily.

11. The premises of the factory or works may be entered upon and examined at any time by any officer of the Northern India Salt Revenue Department authorized by the Commissioner or by any officer of the Salt Department of a province other than those within the jurisdiction of the Commissioner, Northern India Salt Revenue, who may be specially empowered in this behalf by the Central Board of Revenue, and due facilities for examining the manufacturer's salt register as well as for checking the stock of salt received, expended and in hand, shall be afforded by the manufacturer and all other persons employed by him. Salt shall be stored in the bags in which it is received from the Salt Works or depot and the bags shall be arranged in tiers so as to facilitate checking and weighment.

12. The manager of the factory or works shall furnish the Assistant Commissioner with a monthly statement to be posted by the 10th of each following month, showing the opening balance of salt at the beginning of the month, the quantity purchased during the month, the quantity expended during the month, the balance at the close of the month and the weight or quantity or other particulars, as may be required, of the article produced for which salt was used. The manufacturer's book showing the weight or quantity of the article dealt with and the product manufactured shall be open at any time to the inspection of any officer of the Northern India Salt Revenue Department.

13. (i) On any breach of these rules by the Manufacturer, or there being reason to believe that the concession of a drawback of duty on the salt used by the said Manufacturer is being otherwise abused, the Government shall be competent to impose a preventive establishment at the cost and expense of the Manufacturer, or to cancel or withdraw the concession granted under these rules, and to forfeit the amount of inspection fee deposited for the year, and the Manufacturer shall on demand refund all duty, the remission of which shall have been wrongfully claimed and sanctioned.

(ii) The manufacturer shall also be responsible for any loss or damage that may be occasioned by the breach of rules referred to in clause (i) above.

FORM A.

FORM OF RECEIPT.

(*Rule 3.*)

Received from the sum of Rs. in payment for maunds of* salt purchased for use in his factory at

Signature of Approved Dealer.

Date

*Here state the quality of salt, *i.e.*, refinery salt, full duty-paid salt (specifying source of manufacture) or imported salt.

FORM B.

FORM OF SALT REGISTER.

(*Rule 10.*)

Register of Salt purchased, expended and in store together with the weight or quantity of products manufactured.

Date.	Opening balance of Salt.	Quantity of Salt received into Store.	Total quantity of Salt in hand.	Quantity of Salt issued and expended.	Closing balance of Salt.	Quantity or weight of products manufactured.	Manager's Signature.	Remarks.
1	2	3	4	5	6	7	8	9
	M. S.	M. S.	M. S.	M. S.	M. S.	M. S.		

A. H. LLOYD,
Joint Secy. to the Govt. of India.

DEPARTMENT OF INDUSTRIES AND LABOUR.

NOTIFICATIONS.

New Delhi, the 10th January 1935.

No. M.-862.—The following draft of a further amendment to the Indian Explosives Rules, 1914, which it is proposed to make in exercise of the powers conferred by section 5 of the Indian Explosives Act, 1884 (IV of 1884), is published as required by section 18 of the said Act for the information of all persons likely to be affected thereby and notice is hereby given that the said draft will be taken into consideration on or after the 11th March 1935. Any objection or suggestion which may be received in respect of the draft before the date specified will be considered by the Governor-General in Council.

Draft Amendment.

After rule 98 of the said Rules the following rule shall be inserted, namely:—

"98A. *Saving as to conveyance by passenger steamers plying on inland waters in Burma.*—Nothing in rule 90 shall apply to the conveyance by passenger steamers plying on inland waters in Burma of any quantity of explosives of Class 1, 2 or 3 not exceeding 50 lbs. contained in one full case:

Provided that the consignment shall be packed in such manner as may from time to time be approved by the Chief Inspector of Explosives, and stored on the steamer suitably and safely and as far away as possible from inflamable cargo, living quarters, engines, boilers or any other place where there is fire."

No. M.-1132(2).—Mr. B. N. Pal, Inspector of Explosives, on being relieved, is transferred to Calcutta.

A. G. CLOW,
Joint Secy. to the Govt. of India.

RAILWAY DEPARTMENT.

(Railway Board.)

NOTIFICATION.

New Delhi, the 20th December 1934.

No. 9375F.—In pursuance of sub-section (*1*) of section 135 of the Indian Railways Act, 1890 (IX of 1890), the Governor-General in Council is pleased to declare that the administration of the East Indian Railway shall be liable to pay in aid of the funds of the local authority set out in the first column of the schedule annexed hereto the tax specified in the second column thereof:—

Schedule.

Local Authority.	Tax.
Raniganj Municipality ...	Conservancy rate.

L. H. KIRKNESS,
Secretary, Railway Board.

Registered No. C207

The Calcutta Gazette

THURSDAY, JANUARY 24, 1935.

PART IB

Educational Notices.

Departmental Examinations of Training Schools, Session 1934.

Calcutta, the 12th January 1935.

The undermentioned candidates have passed the Departmental Examinations of Training Schools, Presidency and Burdwan Divisions, held in November and December 1934 :—

Second Departmental Examination.

(Arranged in order of merit.)

High (6).

No.	Name of candidate.	Age. Yrs.	M.
	Calcutta Training School.		
1	Chakravarti, Pitambar	22	7
2	Mandal, Benoy Krishna	23	11
3	Jana, Bhajahari	19	2
4	Hazra, Sudhakar	21	10
	Hooghly Training School.		
5	Chakravarti, Krishna Mohan ..	16	1
	Calcutta Training School.		
6	Pal, Krishnapada	23	5

(Arranged alphabetically.)

Medium (19).

	Calcutta Training School.		
1	Adak, Hemanta Kumar ..	18	10
	Hooghly Training School.		
2	Anisur Rahman	22	5
3	Banerjee, Aswini Kumar	27	9
	Calcutta Training School.		
4	Haldar, Harekrishna	22	1
5	,, Jamini Kanta	17	10
6	Hazra, Ananga Mohan	21	10
7	Mandal, Anukul Chandra	21	9
8	,, Dhanapati	22	10
	Hooghly Training School.		
9	Mandal, Jnanapati	23	4
10	,, Rampada	18	2
11	Mahata, Doyal Chandra	17	3
	Calcutta Training School.		
12	Middey, Bhabendra Nath	24	7
13	Md. Bhikuddin	24	1
	Calcutta (Private).		
14	Paria, Bhupati Charan	27	8
	Calcutta Training School.		
15	Sardar, Fazle Karim	22	6
16	Serajul Islam Md. Lal	22	2
	Hooghly Training School.		
17	Sinha Mohapatra, Srigobinda ..	19	7
18	Shaikh Asghar Ali	21	8
	Calcutta Training School.		
19	Shaikh Yakub Ali	17	3

Low (13).

	Calcutta Training School.		
1	Abdul Mannan	16	11
	Hooghly (Private).		
2	Alfazuddin Ahmed	40	0

No.	Name of candidate.	Age. Yrs.	M.
	Calcutta Training School.		
3	Adhikari, Protap Chandra	20	2
	Hooghly Training School.		
4	Biswas, Emajuddin	19	6
5	*Das, Radha Ranjan	15	8
6	Dutta, Banbehari	23	0
7	Ghosh, Abhoyapada	15	11
	Calcutta Training School.		
8	Giri, Phani Bhusan	15	6
9	Mandal, Dhananjoy	15	0
	Hooghly Training School.		
10	Mandal, Nrisinha Murari	20	11
11	*Mirza, Abdul Khalil	18	7
	Calcutta Training School.		
12	Pahari, Harish Chandra	17	7
	Hooghly Training School.		
13	Pal, Sribash Chandra	19	11

First Departmental Examination.

(Arranged in order of merit.)

High (8).

	Calcutta Training School.		
1	Das, Amulya Charan	22	10
2	Modak, Kiran Soshi	23	2
	Hooghly Training School.		
3	Mukherjee, Sujoy Kumar	20	7
	Calcutta Training School.		
4	Giri, Hrishikesh	22	10
5	Karmakar, Rajani Kanta	25	9
	Sahu, Anadi Charan	19	8
6	Bera, Gobindapada	19	11
7	Das, Tarendra Nath	23	6

Medium (35).

	Hooghly Training School.		
1	*Abdus Sattar	21	3
2	Bandyopadhyay, Arunpada	25	9
3	„ Bholanath ..	25	9
4	„ Pannaga Bhusan ..	20	3
	Calcutta Training School.		
5	Bhunia, Sridhar Chandra	20	5
6	Biswas, Radhanath	19	2
	Calcutta (Private).		
7	Chakravarti, Balaram	29	9
	Calcutta Training School.		
8	Chakravarti, Purna Chandra ..	21	5
9	Dhawa, Bhajahari	22	7
10	Datta, Satish Chandra	23	10
	Hooghly Training School.		
11	Garain, Nityananda	20	1
	Calcutta Training School.		
12	Giri, Nanda Lal	23	8
13	Kundu, Gurupada	22	8
	Hooghly Training School.		
14	Lutful Haque	22	9
15	Mandal, Ganesh Chandra	25	3
16	„ Hrishikesh	26	9
17	„ Satish Chandra	27	8
18	Md. Khoshjan Ali	22	1
19	Md. Nazom Ali	22	11
20	Md. Zillar Rahman	25	2
21	Miah, Rowfar Rahman	33	4
22	Mollah, Bozlar Rahman	28	2
	Hooghly Training School.		
23	Mukherjee, Aswini Kumar	20	1
24	„ Dhajadhari	22	2
	Calcutta Training School.		
25	Mukhopadhyay, Ram Durlav ..	22	2
	Hooghly Training School.		
26	Nath, Harekrishna	24	1
	Calcutta Training School.		
27	Nur Muhammad ..	27	3
	Hooghly Training School.		
28	Pal, Durgapada	25	1
29	Patra, Benode Behari	20	9
	Calcutta Training School.		
30	Pramanik, Basanta Kumar	25	1
31	Purkait, Sudhanwa Bhusan ..	25	0
	Hooghly Training School.		
32	Ray, Basanta Kumar	21	4
	Calcutta Training School.		
33	Samanta, Benode Behari	23	8
	Hooghly Training School.		
34	Shaikh Niamat	24	2
35	Sasmal, Bankim Chandra	22	3

Low (9).

	Hooghly Training School.		
1	Bandyopadhyay, Ajit Kumar ..	20	11
	Calcutta (Private).		
2	Bhattacharji, Ahi Bhusan	30	0
	Calcutta Training School.		
3	Biswas, Md. Emran Hossain ..	26	11
4	„ Niranjan	24	1
	Hooghly Training School.		
5	Ghosh, Saroj Kumar	21	10
	Hooghly (Private).		
6	Guria, Jamani Bhusan	27	2
	Hooghly Training School.		
7	Nasipuri, Gobinda Prasad	20	11
	Calcutta (Private).		
8	Purkait, Dhurjati Pada	27	0
	Hooghly Training School.		
9	Yearuddin Molla	24	7

*Not passed in English.

W. A. JENKINS,

Principal, David Hare Training College.

Orders by the Vice-Chancellor and Syndicate of the Calcutta University.

NOTIFICATION No. T. 387.

Senate House, the 11th January 1935.

I.A. AND I.Sc. EXAMINATIONS, 1937.

English.

TEXT-BOOKS.

Poetry.

1. Calcutta University Selections—Pieces to be read will be notified hereafter.

Prose.

2. Calcutta University Selections—Pieces to be read will be notified later.

3. Selections from the Bible, Part I (published by the University) —Portions to be read will be notified later.

Candidates will be expected to possess a general knowledge of the contents of the Introduction to the Bible in so far as it relates to the Old Testament.

4. E. F. Knight. Where Three Empires Meet (Longmans, Green & Co.).

5. Nine Modern Plays (Nelson and Sons). Only the following play: "The Bishop's Candle sticks" (by Norman Mekinnel).

Candidates for the Intermediate Examination in English are expected to possess only a knowledge and understanding of the prescribed pieces (both Prose and Poetry); questions will not be set to test their knowledge of the lives, works and styles of the authors beyond what is involved in the set pieces themselves.

A paper will be set on Essay, Prosody and Rhetoric and some questions will be set on unseen passages from works of the same standard of difficulty as those prescribed for the Matriculation Examination.

Alternative Paper in English*.

TEXT-BOOKS.

1. J. C. Smith. A Book of Modern Verse (Oxford University Press).
2. Charles Reade. Adventures of Gerard (Chakravarti, Chatterjee & Co., Calcutta).

Vernaculars.

Bengali.

TEXT-BOOKS.

Intermediate Bengali Selections (published by the University). Pieces to be read will be notified later.

The following books are recommended as showing the standard up to which the students will be expected to have read:—

Ramendrasundar Trivedi. Charitrakatha.
Vivekananda. Prachya O Paschatya.
Mankumari Basu. Kavyakusumanjali.
Mir Musarraff Hossain. Bishad Sindhu.
Rabindra Nath Tagore. Jiban Smriti, Bichitra Prabandha.
Kaliprasanna Dasgupta. Sanskrita Nataker Galpa.
Karunanidhan Banerjee. Satanari.
Kamalkrishna Basu. Kavikankan Chandi.
Ratnamala Devi. Himalay Bhraman.

Grammar recommended—

Mahamahopadhyay Prasannachandra Vidyaratna—Brihat Sahitya Prabes.

---

*To be taken up in lieu of the papers on Vernacular Language by candidates whose Vernaculars are not included in the list of recognised Vernaculars enumerated under section 7 (2) of Chapter XXXI of the Regulations.

Hindi.

TEXT-BOOKS.

Intermediate Hindi Selections (published by the University).
Pieces to be read will be notified later.

Grammar.

Saral Hindi Vyakaran, by Shibnarayan Lala or Hindi Kaumudi by Ambicaprasad Bajpayi.

The following books are recommended to indicate the standard up to which students will be expected to have read:—

Premchand. Sewasadan (abridged).
Maithilisaran Gupta. Yasodhara.
Siya Ram Saran Gupta. Manasi.
Makhan Lall Chaturvedi. Krishnarjuna Youdha.

Uriya.

TEXT-BOOKS.

Prose.

Ramsankar Ray. Bibhasini.
Rajkishore Mahanti. Nitiprabandha.

Poetry.

Radhanath Ray. Chilka.

Urdu.

TEXT-BOOKS.

(To be notified later.)

Persian.

(To be notified later.)

Assamese.

TEXT-BOOKS.

Prose.

Harakanta Baruah. Assam Buranjee, edited by Professor Suryyakumar Bhuyan, published by the Assam Government.
Jnananath Borah. Jugatatta.

Poetry.

Kabita-Kunja. Compiled by Lakhaswar Sarma.
Kumarharan. Sri Chandrabharati, edited by Rai Saheb Durgadhar Barkataki.

Maithili.

TEXT-BOOKS.

1. Bidyapati Padavali (Revised edition by Kumar Gangananda Sinha, M.A.).
2. Krishna Janma, by Manobodha (Edited by Dr. Umesh Misra, M.A., D.Litt.).
3. Sundar Sanyog, by Jiwan Jha.
4. Kanyadana, by Prof. Harimohan Jha, M.A.
5. Mithila Nataka, by Munshi Raghunandan Das.

Nepali.

TEXT-BOOKS.

Prose.

Sankshipta Bharat, by Gorakha Bhasha Prakashini Samiti, Nepal.
Dhruba (Drama), by Captain Balkrishna Shamshere J. B. Rana.

Poetry.

Satyakali Sambad, by Pandit Lokanath Pandyal, Nepal.
Sundar Kanda Ramayana, by Raghunath Pandit, Nepali Sahitya Sammelan, Darjeeling.

Grammar.

Madhya Chandrika, by Pandit Somnath Sigdyal.

Books recommended for general reading:—

(1) Nepal ko Itihas, by Pandit A. P. Upadhyaya.
(2) Alankar Chandrodaya, by Pandit Kulachandra Gautam.
(3) Bhanubhakta ko Jiban Charitra, by Nepali Sahitya Sammelan, Darjeeling.

Burmese.

TEXT-BOOKS.

Thutathoma Pye; Pyinsa Papi Rakan; Yosagyo Siyinden; Maung Kala Yazawin, Parts III to V.

Telugu.

TEXT-BOOKS.

Prose.

Karpuramanjari—Ch. Lakshminarasimham (Rajahmundry).

Poetry.

Bharatamu, Sabha Parbhamu, V. R. Sastrulu and Sons (Madras).
Bhisma (Drama). Prtingya, Malladi Suryyanarayana Sastri (Vizagapatam).

Khasi.

TEXT-BOOKS.

Ka Jingsnengtymmon, Parts I and II, by Radhon Singh Berry.
Histori Jong Ka Ri Khasi, by B. K. Sarma Roy.
The book of Ecclesiastes in Khasi.
Ka Niam Jong Ki Khasi, by Jeebon Roy.

Sinhalese.

TEXT-BOOKS.

Amavatura, Chapter VI only; Ummagga Jatak up to the end of Udyanaprasna; Selalihini, 52-108 verses only; Subesika, 51-100 verses.

Manipuri.

TEXT-BOOKS.

Wakhalgi Ichol. Khwairakpani Chobba Singh.
Basanta Seirong. A. Tombi Singh, B.A.
Sati Khongnag. S. Lalita Singh.

Tamil.

TEXT-BOOKS.

Madras University Selections for 1936.

Malayalam.

TEXT-BOOKS.

Malavikagnimitram, by A. R. Raja Raja Varma, Koil Thampuram, M.A., published by B. V. Book Depot, Trivandrum, Travancore.
Leela, by T. Ammalu Amma, Vatakandra, Palghat.
Sri Yesucharitam (Life of Christ). Published by K. V. Chacko, Esq., Manager, Bhajo-Bharatam Publishing Company, Chongannur P.O., Travancore.

TEXT-BOOKS.

Poetry.

Jaimini Bharata, Chapters XVI and XVII; Stories of Prameela and Babrubahana (M. S. Rao & Co., Bangalore City); Akrura Charita, by Somanath, Chapter V (Government Central Book Depot, Bangalore); Vikramorvasiya Nataka, by S. Aiya Sastriar ('Kavita Vilas,' Mysore).

Prose.

Raghuvansa Sara Sangraha, by I. Sivaramaiya (Board High School, Coondapur, S. Kanara); Koti Chansiya, by B. Mangesh Rau, B.A., L.T. (Bala Sahitya Mandala, Mangalore); Hidimbe, by K. Sankara Bhatta (Bala Sahitya Mandala, Mangalore).

Modern Tibetan.

TEXT-BOOKS.

Pagsam Tishing, the first two chapters (Asiatic Society of Bengal's Publication); Jewe Atisha's Journeys to Serling (Suvarnadwipa).

Gujarathi.

TEXT-BOOKS.

Nandasankar. Karan Ghelo (School Edition).
Khan Saheb and N. Trikamlal. Sahitya Ratna (Poetical Selections from modern period only).

Marathi.

TEXT-BOOKS.

Prose.

Gobinda Chimaji Bhate. Prem ki Laukik.
Harinarayan Apte. Ushakala.
N. C. Kelkar. Gadyaguchha, Second Edition.

Poetry.

(From the Navanit, Second Edition.)

Tukaram, Sphuta Abhanga (pages 47 to 88).
Ramdas, pages 159 to 169.

Portuguese.

TEXT-BOOKS.

Prose.

Eurico o Presbytero, by Alexandro Herculano.

Poetry.

A Musa em Ferias.

Modern Armenian.

TEXT-BOOKS.

Prose.

Papazian's History of Armenian Literature, pages 633-817.

Poetry.

Poetical Selections from Hai Groghner, Part II, pages 520-803.

Second Languages.

Sanskrit.

TEXT-BOOKS.

Prose.

University Sanskrit Selections (Revised Edition). Pieces to be read will be notified later.

Poetry.

Raghuvansam, Cantos XIII and XIV.
Bhagabat-Gita, Chapter XII.
Bhattikavyam, Canto I.
Grammar (a fuller knowledge of the Elements of Sanskrit Grammar than at the Matriculation Examination will be required).

Books recommended—

Sanskrit Grammar (Bengali Edition), by Pandit Muralidhar Banerjee and Dr. Prabhatchandra Chakrabarti (published by the University).

Or

An Elementary Sanskrit Grammar, by G. Thibaut (latest edition, published by the University).

Pali.

(Second Language.)

Intermediate Pali Selections (published by the University). Pieces to be read will be selected later.

Arabic.

TEXT-BOOKS.

(To be notified later.)

Persian.

TEXT-BOOKS.

(To be notified later.)

Greek.

TEXT-BOOKS.

Plutarch. Perikles.
Homer. Odyssey VIII.
The course includes Attic Greek Grammar.

Latin.

TEXT-BOOKS.

Cicero. De Senectute.
Virgil. Aeneid II.
The course includes Latin Grammar.

French.

TEXT-BOOKS.

Erkmann-Chatrian—Waterloo, Ed. by E. Pellisier.
Moliere. Le Medecin malgre lui.
The course includes French Grammar.

German.

TEXT-BOOKS.

Schrutzler. Zwei Tiroler novellen (Bill).
Heine. Buch der Lieder (Macmillan)—the following pieces are to be read:—

Die Grenadiere.
An meine Mutter I and II.
Lyrisches Intermezo 1-19.
Aus der Narzreise.
Meergruss.
Sturm.
Meeresstille.
The course includes German Grammar.

Classical Armenian.

TEXT-BOOKS.

Prose.

Moses of Khoren's History of Armenia, Part II.

Prose and Poetry.

Elishe Vardapiet Doorian's Course of Classical Armenian, Part II.

Grammar.

Gafamajiam (a fuller knowledge will be required than at the Matriculation Examination).

Italian.

TEXT-BOOKS.

1. Cellini. Autobiografia.
2. Alfieri. Autobiografia.
3. Scelta Di Novelle.
4. Antologia cel Carducci (Primayera e Fiori).

Hebrew.

TEXT-BOOKS.

Genesis, Chapters 15 to 37.
Isaiah, Chapters 40 to 56.
Psalms, 25 to 41.
Book of Ruth.

Syriac.

TEXT-BOOKS.

Paper I.

Biblical (Peshitto Version).

The Book of Acts, Chapters VIII to XXVIII.
Psalms, Chapters XXV to XLI.

Paper II.

Non-Biblical.

Bar-Hebraeus. Nomo Canon, Chapter VIII, Sections I to V, St. Ignatius—

(*i*) Epistle to Polycarp.
(*ii*) Epistle to the Ephesians.
(*iii*) Epistle to the Romans.

Grammar.

Robinson's Syriac Grammar (whole).

Bengali.

(As Second Language for female candidates.)

(1) Krittibas. Ramayana, Ayodhya Kanda (edited by Nabakrishna Bhattacharyya).
(2) Michael Madhusudan Datta. Meghnad Badh Kavya. Canto IX.
(3) Rabindranath Tagore. Vedic Sahitya.
(4) Saratchandra Chatterjee. Ramer Sumati.
(5) Mankumari Basu. Birkumarbadha.
(6) Lalitmohan Chatterjee and Charuchandra Banerjee. Bangabina (Indian Press, Ltd., Allahabad). Pieces to be prescribed later.

Books recommended—

Nabinchandra Sen. Amitabha.
Kaliprasanna Dasgupta. Sanskrita Nataker Galpa.
Jogendranath Gupta. Bharat Mahila.

Grammar recommended—

Mahamahopadhyay Prasannachandra Vidyaratna—Brihat Sahitya Prabes. (A fuller knowledge of the Grammar than at the Matriculation Examination will be required).

Hindi.

(As Second Language for female candidates.)

TEXT-BOOKS.

Prose.

Subhanakumari Chauhan. Bhikaro moti.

Poetry.

Tulsidas. Aranyakanda Ramayan.
Jyotiprasad Misra. Stri Kavi Sangraha.
The following pieces only:—

1. Mira Bai—padas Nos. 4, 5, 6, 7, 10, 12 and 13.
2. Sahajo Bai—Dasta-Warnana and Sadhu-Warnana.
3. Subhadrakumari Chawhan—full.
4. Mahadevi Verma—full.
5. Bundala Bala—full.
6. Yugal Priya—full.

Grammar.

Saral Hindi Vyakaran, by Shibnarayan Lala; or Hindi Kaumudi by Ambicaprasad Bajpayi.

Assamese.

(As Second Language for female candidates.)

TEXT-BOOKS.

Sakuntala Kavya, by Kaviraj Chakravarti, edited by Rai Saheb Durgadhar Barkataki.
Sahitya-bichar. Satyanath Borah.
Padmakumari. Lakshminath Bezboruah.
Satyanath Borar Jiban Charit. Sarbeswar Kataki.
Sandhiar-Sur. Nalinibala Devi.

Khasi.

(As Second Language for female candidates).

TEXT-BOOKS.

The Book of Proverbs in Khasi.
The Book of Estherin Khasi.
Ka Ain Jingkoi Jingkhian, by Dr. Lyngdoh.
Ka Puriskam Shaphang U Abbadin, by Mondon Barah.

Urdu.

(As Second Language for female candidates.)

TEXT-BOOKS.

(To be notified later.)

Logic.

The subject of Logic is to be studied as defined by the Syllabus. Students are recommended to use one or more of the following books, or select portions thereof, with special reference to the course laid down in the Syllabus:—

Kalidas Sen. The Elements of Logic (Deductive and Inductive).
N. N. Sengupta. The Groundwork of Logic, Part I (Principles of Deduction).
Bholanath Ray. A Text-book of Deductive Logic.
Bholanath Ray. A Text-book of Inductive Logic.
Carveth Read. Logic—Deductive and Inductive.
Latta and Macbeath. The Elements of Logic.
A C. Mitra. Principles of Logic (Deductive and Inductive).
P. K. Ray. Deductive and Inductive Logic.
R. R. Thomas. Students' Logic (Deductive and Inductive).
Welton and Monahan. Intermediate Logic (Second Edition).
Sola. Compendium of the Science of Logic (Macmillan & Co.).

Preparatory Reading.

Students are advised to read the following books before joining the regular course:—

Creighton. Inductive Logic, Parts I and II.
Jevons. Elementary Lessons in Logic.
P. D. Shastri. Elementary Text-book of Inductive Logic.

History.

Books recommended to be used in studying the subject in accordance with the syllabus.

Paper I—History of England.

(From the earliest times to the end of the reign of Victoria.)

G. T. Warner and C. K. Martin. Groundwork of British History.
Tout. An Advanced History of Great Britain (No. 3, Longmans).

Paper II—History of Greece and Rome.

(The History of Greece is to be studied from the earliest times to the Roman Conquest 146 B.C., and the History of Rome is to be studied from the earliest times to the extinction of the Western Empire, 476 A.D.)

Bury. History of Greece for Beginners.

(*N.B.*—This book comes down only to 322 B.C.)

Pelham. Outlines of the History of Rome (Imperial Period only).
J. Wells. A Short History of Rome.

(*N.B.*—Candidates are required to have a knowledge of Historical Geography.)

Geography.

Books recommended to be used by students in studying the subject in accordance with the syllabus:—

Johnston. Our World to-day.
L. Dudley Stamp. The World—A General Geography for Indian Schools (Longmans, Green & Co.).
Tarr. Physical Geography (Revised edition).
Hatch. Outdoor Geography (Blackie and Sons).
Gregory, J. W. Geography, Structural, Physical and Comparative.
Simons and Richardson. Introduction to Practical Geography.
W. A. Elderton. Maps and Map-drawing.
Fanthorpe. Physical Atlas and Map-drawing.
Blandford. Rudiments of Physical Geography for the use of Indian Schools.
Bartholomew (with introduction by Lydel). Economical Atlas (Oxford University Press).
J. C. Cunningham. Products for the Empire.
C. Morrison. New Geography of the Indian Empire and Ceylon.
H. N. Diction. Maps—How they are made and how to read them.
L. Dudley Stamp. Longmans' Geographical Exercise Books, Parts I and III (Longmans, Green & Co.).

Elements of Civics.

Books recommended to be used by students in accordance with the syllabus:—

Penson. Economics of Every-day Life, Parts I and II.
P. N. Banerjea. An Introduction to the Study of Indian Economics.
Lahiri and Banerjee. An Introduction to the Principles of Civics.
Palande. British Administration in India.

Commercial Geography.

Books recommended to be used by students in accordance with the Syllabus:—

B. B. Mukherjee. Economic and Commercial Geography of India.
Philips. Commercial Atlas of the World.
Herbertson and Berrell. Chambers' Commercial Geography of the World (New Edition).

(Map-drawing is to be regarded as essential.)

Commercial Arithmetic and Elements of Book-keeping.

Books recommended to be used by students in accordance with the Syllabus:—

B. S. Sodhi. Elements of Book-keeping.
S. Jackson. Commercial Arithmetic (Macmillan & Co.).
P. W. Norris. Principle and Practice of Commercial Arithmetic (Sir Isaac Pitman and Sons).

Or

Pickering. Commercial Arithmetic.

Mathematics.

No text-books are prescribed. The subject is to be taught in accordance with the Syllabus prescribed in the Regulations.
The following books are recommended:—

Asutosh Mukhopadhyay. Geometry of Conics.
S. K. Ganguli. Elementary Conics.
Sunitikumar Pal. Geometry of Conics.
Harendranath Datta. Analytical Conics.
R. G. Nath. Intermediate Geometry.
Loney. Elements of Statics and Dynamics.
S. P. Das and Sen. Elementary Statics and Dynamics.
G. Banerjee. Dynamics.
K. Basu and S. Karmakar. An Intermediate Course of Statics.
Syamacharan Basu. Plane Trigonometry.
P. B. Mukherjee and A. L. Ghosh. Plane Trigonometry.
Charuchandra Ghosh. Intermediate Trigonometry.
Devaprasad Ghosh. Plane Trigonometry.
B. C. Das and B. N. Mukherjee. Intermediate Trigonometry.
K. P. Basu. Algebra, Volume II.
Ghosh and Mukhopadhyay. Intermediate Algebra.
Chintaharan Ray. Intermediate Algebra.

Chemistry.

Books recommended to be used by students in studying the subject in accordance with the syllabus:—

Donnington. A Class Book of Chemistry, Parts I to IV (Macmillan & Co.).
Smith and Kendall. Inorganic Chemistry.
Ladlimohan Mitra. Text-book of Inorganic Chemistry.
S. N. Ray. Outlines of Inorganic Chemistry.
D. N. Mukherjee. Elements of Inorganic Chemistry.
Jones. Practical Chemistry (Macmillan & Co.).
Partington. Every-day Chemistry (Macmillan & Co.).

Physics.

Books recommended to be used by students in studying the subject in accordance with the syllabus:—

R. A. Houston. Intermediate Physics (Longmans).
Browne. Experimental Science—Electricity and Magnetism.
Hutchinson. Heat.

The following books may also be consulted;—

R. K. De. Introduction to the Study of Physics—Sound and Heat only.
Moore. Intermediate Physics.
Brooke and Poyser. Magnetism and Electricity (Longmans).
Black and Davis. New Practical Physics (Macmillan).
K. P. Ghosh. Text-book of Electricity and Magnetism.

Botany.

Books recommended to be used by students in studying the subject in accordance with the syllabus:—

M. M. Raychaudhuri. Intermediate Course of Botany.
G. C. Bose. A Manual of Indian Botany.
D. R. Banerjee. Botany for Students.
Le Goc. Introduction to Tropical Botany.
Analytical Key of Natural Orders (published by the Calcutta University).

Candidates will be required to possess a special knowledge of the following natural orders of plants:—

For Phanerogamic Botany.

1. Anonaceae.
2. Cruciferae.
3. Malvaceae.
4. Leguminosae.
5. Cucurbitaceae.
6. Compositae.
7. Solanaceae.
8. Labiatae.
9. Liliaceae.
10. Amaryllidaceae.
11. Cyperaceae.
12. Graminaceae.

Candidates will be required to study the outlines of the life-history of the following selected plants to illustrate the gradual ascent in complexity of structure and reproductive cycle from the lowest fungi and algae to the phanerogams:—

1. Yeast.
2. Mucor.
3. Agaricus.
4. Spirogyra.
5. Moss.
6. Fern.
7. Equisetum.
8. Selaginella.

Physiology.

Books recommended to be used by students in studying the subject in accordance with the syllabus:—

Hill. Manual of Human Physiology.
Huxley. Lessons in Elementary Physiology.

Geology.

Books recommended to be used in studying the subject in accordance with the syllabus:—

Sir A. Geikie. Class Book of Geology.
E. S. Dana. Minerals and How to Study Them.
D. N. Wadia. Geology of India.
Rutley. Elements of Mineralogy.
Watts. Geology for Beginners.
Smith. Minerals and the Microscope.
Tarr and Von Engeln. New Physical Geography.

Biology.

Books recommended to be used in studying the subject in accordance with the syllabus:—

A. C. Datta. A Class-book of Botany.
Parker and Bhatia. Text-book of Zoology for Indian Students.
Lloyd. Introduction to Zoology.

Zoology.

Books recommended to be used by students in studying the subject in accordance with the syllabus:—

Marshall. The Frog.
Lloyd. Introduction to Biology for Students in India.
O'Donoghue. Introduction to Zoology.
Borradaile. Manual of Elementary Zoology.
Parker and Bhatia. Text-book of Zoology for Indian Students.

J. CHAKRAVORTI, *Registrar.*

Orders by the Vice-Chancellor and Syndicate of the Calcutta University.

NOTIFICATION No. T. 385.

Senate House, the 21st December 1934.

MATRICULATION EXAMINATION, 1937.

English.

The following pieces from "Select Readings from English Prose" (University publication) and "Lahiri's Select Poems" (University publication) are prescribed to be read in English for the Matriculation Examination in 1937:—

Select Readings from English Prose.

Webster Smith. The Attack on Mount Everest.

Washington Irving. Rip Van Winkle.

William Cowper. Letter to the Rev. John Newton (29th March, 1784).

William Cowper. Letter to Mrs. Bodham (Weston, 27th February, 1790).

Earl of Chesterfield. Letter to His Son (London, 21st June, O. S. 1748).

Earl of Chesterfield. Letter to His Son (London, 10th January, O. S. 1749).

Miss Mitford. The Incendiary.

Gardiner. On Courage.

Irving. The Widow and Her Son.

Lamb. Rosamond Gray.

Swift. Gulliver's Travels.

Lahiri's Select Poems.

Campbell. Napoleon and the British Sailor.
Davies. Early Spring.
Cowper. John Gilpin.
Mary Lamb. Feigned Courage.
Lowell. Yussouf.
William Morris. The Son of Coresus.
Wilfrid Gibson. The Lighthouse.
Doyle. The Red Thread of Honour.
Hunt. Mahmoud.
Hunt. Abu Ben Adhem and the Angel.
Byron. Belshaazzar's Feast.
Addison. Cato's Soliloquy on Death.
Tennyson. The May Queen.
Richardson. Lines to the Memory of David Hare.

Alternative Paper in English.

The following pieces from Moorhouse's "Burning hold" are prescribed to be read for the Alternative Paper in English for the Matriculation Examination in 1937:—

The whole book with the omission of the following pieces only:—
Lizzie Lindsay (page 21).
The Herd Laddie (page 30).
Cock up your Beaver (page 34).
Two Rivers (page 111).
Wee Jouky Daidles (page 116).
The Eohippus (page 136).
The Wee Crodlen Doo (page 139).

Bengali.

(Vernacular.)

The following pieces from "Matriculation Bengali Selections" (University publication) are prescribed to be read in Bengali Vernacular:—

Prose.

1. Debendranath Tagore. Atmajibani.
2. Iswarchandra Vidyasagar. Sakuntalar Patigrihe Yatra.
3. Sanjibchandra Chattopadhyay. Palamau.
4. Bankimchandra Chattopadhyay. Debi Chaudhurani. Deba Mandir.
5. Jogindranath Basu. Michael Madhusudaner Seshjiban.
6. Ishanchandra Ghosh. Illis Jataka.
7. Rabindranath Tagore. Bhatridway. Guptadhan.
8. Swarnakumari Debi. Dip Nirban.
9. Chandicharan Bandyopadhyay. Vidyalaye Vidyasagar.
10. Dineschandra Sen. Behular Basar.
11. Balendranath Tagore. Janma Bhumi.
12. Jagadindranath Ray. Saisab Smriti.
13. Prabhatkumar Mukhopadhyay. Mastar Mahasay.
14. Saratchandra Chattopadhyay. Ramer Sumati.
15. Khagendranath Mitra. Ramendrasundar.
16. Mohammad Barkatullah. Kavi Fardausir Pratibha.
17. Wajed Ali. Bharatbarsha.

Poetry.

1. Krittibas. Sitar Banagaman.
2. Balaram Das. Uttargostha.
3. Bharatchandra Ray. Siber Bhikha Yatra.
4. Michael Madhusudan Datta. Atmabilap.
5. Krishnachandra Majumdar. Prabasir Janmabhumi Darsan.
6. Nabinchandra Sen. Buddher Grihatyag.
7. Girischandra Ghosh. Siddhartha-o-Bimbasar.
8. Rabindranath Tagore. Gandharir Abedan; Nirjharini; Pujarini.
9. Dwijendralal Ray. Ghumanta Sisu.
10. Kamini Ray. Dharay Debata Chahi.
11. Atulprasad Sen. Bharat Bhanu; Debata.
12. Jatindramohan Bagchi. Singhagarh.
13. Karunanidhan Bandyopadhyay. Mahaprayane Asutosh.
14. Golam Mustafa. Kurano Manik.
15. Kalidas Ray. Krishanir Byatha.

Hindi.

(Vernacular.)

The following pieces from the "Matriculation Hindi Selections" (University publication) are prescribed to be read in Hindi Vernacular:—

Prose.

1. Bir Singh ka Vrittantta. Raja Shiva Prasad.
2. Mahakavi Kalidas ka Charita. Haris Chandra.
3. Dara Shikoh ki har our Usha Vadha. Sharmaji.
4. Mira Bai. N. Saniya.
5. Hindusthan. B. Gupta.
6. Hamari Edward Tilak Yatra. G. D. Singh.

Poetry.

1. Sundar Kanda. Tulsidas.
2. Niti Samayah Upadesh. Gridhar Kavi Rai.
3. Anand Arunodaya. Prem Ghan.
4. Maharaj Dilip Ko Nandinika Vardan. Lala Sita Ram.
5. Jiwan Maran. Ayodhya Singh.

Sanskrit.

(Second Language.)

The following pieces from the "Matriculation Sanskrit Selections," Prose and Poetry (University publications) are prescribed to be read:—

Prose Selections.

Panchatantram:

Panchatantra-Kathamukham.
Haridatta-Kshetrapalal Sarpa Katha.
Atilobhi-Brahmanputtranam Parinamah.
Asambhabya-Chinta parinamah.
Nilavarna-Srigala-katha.
Asamhatanam vinasah.
Kshudranam samhati.
Subarnamaya-purisha-pakshi-katha.
Chandra bhupati-katha.

Hitopadesah:

Satham Mitram.
Gunasya Doshatvam.
Prabhoradarah.
Bandhubalam.
Kankana-lubdha-pantha-katha.
Baka-rajahansa-katha.
Asatsangadoshah.
Avivekasya parinamah.
Ajnata-kulasilo bandhuh.
Mitralabhomitrobhedascha.
Apaya-chintaprayojanam.
Sunye Saudha-nirmanam.

Bhojaprabandhah:

Vatsarajena Bhojarajasya pranarakshanam.

Vetalpanchavimsatih:

Yajnasomanamno brahmanasyopakhyanam.
Chaturnam brahmanatanayanamupakhyanam.

Vishnupuranam:

Mandhatrikatha.
Sagarabamsakhyanam.
Chandravamsakhyanam.

Poetry Selections.

Ramayanam—Ramaswamedha Sabhayam Valmikerajnaya Kusilabayoh Ramayanaganam. Sitayah Patalprabasascha.

Mahabharatam—(1) Birata-samabetanam-Krishnadinam-Yuddhabishayah mantrana; (2) Saranagata-rakshanam.

Vishnupuranam—Vimaturvachobanabiddhasya Dhruvasya banagamanam.

Pali.

(Second Language.)

TEXT-BOOKS PRESCRIBED.

Matriculation Pali Selections (University Publication). The following pieces only are prescribed to be read:—

Prose.

1. Mulapariyaya-Jataka.
2. Vannupatha-Jataka.
3. Sujata-Jataka.
4. Nakkhatta-Jataka.
5. Mahosadha's Wit.
6. Latukika-Jataka.
7. Sammodamana-Jataka.
8. Rajovada-Jataka.
9. Annihilation of the Sakiyas.
10. Vasudeva and his brothers.

Poetry.

(*a*) Khuddakapatha:

1. Saranagamanam.
2. Dasa-Sikkhapadam.
3. Mangalam.
4. Peta-Dakkhina.
5. Metta.

(*b*) Dhammapada:

1. Sanantana Dhamma.
2. Appamada.
3. Citta.
4. Puppha.
5. Danda.
6. Tanha.
7. Magga.
8. Buddha's Udana.
9. "Buddhana Sasanam."
10. Buddha's Exhortation.

Grammar.

1. Balavatara (Ed. Sailendranath Mitra, Calcutta University Publication, Second Edition): the sutras on Samasa, Karaka and Vibhatti only.

2. Pali Grammar, by Nilmani Chakravarti and Mahendrakumar Ghosh (whole).

Bengali.*

(Second Language.)

TEXT-BOOKS PRESCRIBED.

1. Matriculation Bengali Selections (Published by the University). The following pieces only:—

Prose.

Debendranath Tagore. Atmajibani.
Sanjibchandra Chattopadhyay. Palamau.
Bankimchandra Chattopadhyay. Debi Chaudhurani.
Dineschandra Sen. Behular Basar.
Swarnakumari Devi. Dip Nirvan.
Rabindranath Tagore. Guptadhan.
Prabhatkumar Mukhopadhyay. Mastar Mahasay.
Saratchandra Chattopadhyay. Ramer Sumati.
Chandicharan Bandyopadhyay. Vidyalaye Vidyasagar.
Wajed Ali. Bharatbarsha.

Poetry.

Krittibas. Sitar Banagaman.
Krishnachandra Majumdar. Prabasir Janmabhumi Darsan.
Rabindranath Tagore. Gandharir Abedan. Pujarini.
Dwijendralal Ray. Ghumanta Sisu.
Kamini Ray. Dharay Debata Chahi.
Atulprasad Sen. Bharat Bhanu Debata.
Kalidas Ray. Krishanir Byatha.

2. Ashutosher Chhatra Jiban, by Atulchandra Ghatak.

Hindi.*

(Second Language.)

TEXT-BOOKS.

1. Tulsi Das, by Pandit Jagannath Prasad Chaturvedi (Gangapustakamala, Lucknow).
2. Pancha Prasun.
3. Jayadrath Vadha, by Maithili Saran Gupta.

Bengali.

(As Second Language for female candidates.)

The following pieces from "Virangana Kavya," by Michael Madhusudan Datta are prescribed to be read in Bengali as Second Language for female candidates:—

(1) Niladhvajer prati Jana.
(2) Jayadrather prati Duhsala.
(3) Dasarather prati Kaikeyi.

*Open only to a candidate if it is not his/her Vernacular.

Urdu.

(Vernacular.)

TEXT-BOOKS.

Prose.

Aina-i-Ibrat, by Khujasta Akhtar Banu Suhrawardy Begum (Part I, pages 1-50). (Delhi Edition.)
(Dar-ul-Isha'at, 56, Mirzapore Street, Calcutta.)

Poetry.

Musaddas-i-Hali (First 80 Musaddas).

The following books are recommended as showing the standard up to which the students will be expected to have read:—

Makhzani Adab, by Maulvi Hafiz Dr. M. A. Shahid (Aligarh Muslim University Press).
Kowkab-i-Durri (short history of the birth of the Prophet), by Khujasta Akhtar Banu Suhrawardy Begum.
(Dar-ul-Isha'at, 56, Mirzapore Street, Calcutta.)

Arabic.

(Second Language.)

TEXT-BOOKS.

Matriculation Arabic Selections (latest edition published by the Calcutta University). The whole book with the omission of pages 13 to 29 (beginning from Al-Babus Sthalith fil-Hikayat-wol-Lataif).

Grammar recommended.

A Grammar of Arabic Language, by Maulana Obaidullah (al-Obaidi) —Revised by Sir Abdulla-al-Mamun Suhrawardy.
(Dar-ul-Isha'at, 56, Mirzapore Street, Calcutta.)

Persian.

(Second Language.)

Matriculation Persian Selections (revised edition of 1933, published by the University).
The following pieces only:—

Prose.

Pages 1-18 (Selections from Gulistan).
Pages 70-83 (Selections from Columbus).

Poetry.

Pages 89-100 (Selections from Bustan).
Pages 103-112 (Selections from Attar).
Pages 165-167, 176-179, 201-204 (Selections from Ubaidi).

Grammar recommended.

(1) Matriculation and I. A. Persian Grammar, by A. A. K. Mohammad.
(2) Anglo-Persian Grammar, by Maulvi Abdul Hadi, Lecturer, Calcutta University.

Urdu.

(As Second Language for female candidates.)

TEXT-BOOKS.

Kahanion Ki Panchawin Kitab, by Marsden and Suraj Narayan Mihr (Macmillan & Co.), pages 1-53.

Grammar.

Usul-i-Urdu or any other easy grammar.

For general reading.

Subh-i-Zindagi, by Rashid-ul-Khairi.

Urdu.

(As Second Language.*)

TEXT-BOOKS.

Mauntakhab-ul-Hikayat, by Nazir Ahmad, pages 1-40.
Kowkab-i-Durri (a short history of Birth of the Prophet), by Khujasta Akhtar Banu Suhrawardy Begum, pages 1-10.
(Dar-ul-Isha'at, 56, Mirzapore Street, Calcutta.)

Grammar.

Usul-i-Urdu or any other easy grammar.

For general reading.

Kahanion Ki Panchwin Kitab, by Marsden and Suraj Narayan Mihr (Macmillan & Co.).
Musaddas-i-Hali.

Hindi.

(As Second Language for female candidates.)

TEXT-BOOKS.

Tulsidas's Ramayan, Sundar Kanda.
Kanyajali, by B. Tripathi, B.A. (published by the Gopal Publishing House).
Hindi ki Sarwashushta Kahaniya. Nanda Dular Bajpai.

Grammar.

Saral Hindi Vyakaran, by Shibnarayan Lala or Hindi Kaumudi, by Ambikaprasad Bajpayi.

N. B.—This cancels previous notification issued on the subject.

Tamil.

(Vernacular.)

TEXT-BOOKS.

Thiruthondar Periya Puranam, by Viswanatha Pillai (Vidyanupalaya Printing Press, Madras), page 22—Sundaramurthy Nayanar Thiruthonda Thukai, verses 1-11 and also pages 25 and 26.
Balaramayanam, pages 3-41. To be had of Messrs. Jayam and Co., Publishers and Booksellers, Egmore, Madras.
Balabharatam, pages 3-50. To be had of Messrs. Jayam and Co., Publishers and Booksellers, Egmore, Madras.
Nalabazni (published by Messrs. P. N. Chidambara Mudaliar Bros., Madura).

N. B.—This cancels previous notification issued on the subject.

Elementay Hygiene.†

The following books are recommended to be studied in accordance with the prescribed syllabus in Hygiene:—

(1) Palli Swasthya and Saral Swasthyabidhan (in Bengali), by the late Rai Bahadur Chunilal Bose, C.I.E., I.S.O.
(2) Matriculation Hygiene (in Bengali), by Rameschandra Ray, L.M.S.
(3) A Text-book of Hygiene (in English), by C. Ramamurti (Macmillan and Co., Ltd.).
(4) Manual of Hygiene and Domestic Economic (Macmillan and Co.).
(5) Elementary Hygiene, by Dr. Jyotischandra Ray (in Bengali).

---

*Open only to a candidate if it is not his/her Vernacular.

†Candidates taking up this subject will be permitted to submit their answers in that subject in one of the following languages:—English, Bengali, Hindi, Uriya, Assamese, Urdu, Burmese or Modern Armenian.

Syllabus in Hygiene.

I. *Definition of Hygiene*—Personal and Public.

II. *General structure of the human body.*—The skeleton, muscles, nervous, respiratory, circulatory, secretory and excretory system. Organs of special sense.

III. *General functions of human body.*—Locomotion; Innervation; Physiology of Respiration, Circulation and Digestion.

Secretion and Excretion.

IV. *Air.*—Its average composition. Functions of Oxygen. The air before and after respiration. Other sources of impurities. Air of crowded rooms. Evil effects of impure air. Increased incidents of Tuberculosis in India. Dust and its dangers. Air-borne diseases.

Means of purification of air, *natural* and *artificial; part* played by plants. Ventilation. Minimum air-space for each person in schools and dwelling houses.

V. *Water.*—Its composition. Natural waters.

The need for water and the quantity required for individual.

Chief sources of water-supply in Bengal and how they are polluted.

Chief impurities of water and their significance. Hard and soft water.

How to keep the sources of water (wells, tanks, etc.) free from pollution.

Means for purification of drinking water; distillation; filtration; use of chemicals; boiling.

Evil effects of the impure or scanty supply of water. Water-borne diseases.

VI. *Food.*—Its six nutritive principles (proteids, fat, carbohydrate, salts, vitamin and water), their respective functions and the quantity of each required in health for people of different ages and vocations.

Composition of common foodstuffs:—

Milk; meat; fish; eggs; poultry; flour, rice, *dal;* butter, ghee and oil; sugar; potatoes; various fresh vegetables, fruits and nuts.

Character of good meat, fish and milk.

Common adulterants of food.

Food in relation to diseases.

Accessories of food.—Condiments and *chutneys.* Good drinks and harmful drinks—tea, coffee and cocoa; aerated waters; alcohol.

Construction of suitable diet.—Scales for different people. Eating of food and time of eating, intemperance in eating, insufficiency of food.

Cooking, storage and distribution of food.

Some preserved foods.

VII. *Dwelling Houses.*—Selection of site; houses to be constructed on well-thought-out plans; plenty of light and air; protection against damp; good drainage; privies, cowsheds and stables at some distance from the main building; sufficient open space between contiguous houses; adequate arrangements for disposal of refuse and filth.

Huts in villages; low-lands to be avoided; plinth well-raised; sufficient number of openings for light and air in each room; situation of latrines and cowsheds; arrangements for drainage and disposal of sewage.

VIII. *Preventive Medicine.*—Epidemic and endemic diseases, Malaria, Cholera, Small-pox, Plague, Influenza, Typhoid fever, Kala-azar, Dysentery, Tuberculosis; Consumption, Hook-worm and other common parasitic diseases—a brief study as to their origin and modes of spread and the measures for their prevention.

Insects in relation to spread of diseases.

Small-pox and vaccination.

A general knowledge of antiseptics, disinfectants, and inoculation.

Disinfection of rooms, clothing, beddings, excreta and discharges.

IX. *Personal Hygiene.*—Care of teeth, hair and skin. Baths. Clothings—Materials and forms used should be adapted to the climate, habits and occupation of the people. Clothing of children.

Work and Exercise.—Out-door and in-door games.

Fatigue, Rest and Sleep.—Amount of sleep required for persons of different ages.

Importance of attitudes and postures. Eye-sight and its preservation.

Bad habits.

X. *Evil effects of the use of intoxicating drugs.*—Tobacco, Opium, Indian hemp, Cocaine.

Note.—It is not intended that candidates should be examined in Chemistry, Anatomy, Physiology or like contributory subjects; but the students should be taught, with the aid of experiments, such simple facts in these contributory subjects as may be essential for an elementary scientific knowledge of hygiene.

The schools which apply for recognition in hygiene are expected to provide the following appliances:—

1. Human skeleton (articulated)—1.
2. A complete set of human bones (disarticulated).
3. Charts—
   (*a*) Circulatory system.
   (*b*) Respiratory system.
   (*c*) Digestive system.
   (*d*) Secretory system.
   (*e*) Nervous system.
4. Charts showing the different carriers of the most common infective diseases:—
   (*a*) Mosquitoes.
   (*b*) Flies.
   (*c*) Fleas, etc., and their life-history.
   (*d*) Common parasites—itches, etc.
5. Charts showing the life-cycles of malarial parasites in man and in the mosquitoes.
6. Charts showing common intestinal parasites such as round-worm, thread-worm, hook-worm, etc.
7. Charts showing the microbes of common infective diseases—cholera, tuberculosis, plague, diphtheria, influenza, typhoid fever, dysentery, etc., etc.
8. Magnifying lens—1.
9. Students' microscope—1.
   Glass slides—24.
   Cover glasses—½ gross.
10. Four-celled Bunsen Battery—1.
11. Beakers, glass, assorted, with glass covers—12.
12. Test-glasses—4.
13. Test tubes (6″ × ⅝″)—3 doz.
14. Bell jars—2.
15. Bell jar with open top—1.
16. Glass flasks (assorted)—6.
17. Measure glass (8 oz.)—1.
18. Measuring cylinder (500 cc.)—1.
19. Pipettes (graduated, 19 cc.)—2.
20. Ordinary pipettes—4.
21. Watch glasses (assorted)—6.
22. Spirit lamp—1.
23. Liebig's condenser—1.
24. Glass-stoppered phials (narrow-mouthed)—
    4 oz.—6.
    8 oz.—2.
    16 oz.—4.
25. Glass-stoppered phials (wide-mouthed)—8 oz.—6.
26. Corked phials of different sizes—2 doz.
27. Centigrade thermometer (200°C.)—1.
28. Fahrenheit thermometer (212°F.)—1 doz.
29. Chemical thermometer (magnified)—1.
30. Burette (10 cc.) with glass stop-cock—1.

31. Burette (25 cc.) with glass stop-cock—1.
32. Wall barometer—1.
33. Lactometer—1.
34. Porcelain capsules (with spouts) (for evaporation)—4.
35. Glass funnels (assorted)—4.
36. Glass cylinders (non-graduated)—

    4 oz.—2.

    8 oz.—1.

    16 oz.—1.

37. Cylinders or bottles for collecting gases with ground-glass stopper or plates—6.
38. Woulffe's bottles (16 oz. capacity)—2.
39. Wash bottle (16 oz. capacity)—1.
40. Porcelain crucible (with lid)—1.
41. Porcelain dishes (with dinner plates)—4.
42. Fire-clay triangles—3.
43. Glass retorts (4 oz. capacity) with glass stopper—2.
44. Aspirator (10 litre capacity)—1.
45. Calcium chloride tube—1.
46. Desiccator—1.
47. Pneumatic trough (glass or terracotta)—1.
48. Test-tube holder—2.
49. Test-tube stands (wooden)—2.
50. Nickelled iron tongs—2.
51. Iron tripod—2.
52. Wire gauge, 4″ square—2.
53. Platinum foil, 4″ × 4″—1.
54. Platinum wire (thin)—1 yard.
55. Air pump—1.
56. Pasteur Chamberland or Berkefield filter—1.
57. Charts showing shallow and deep wells.
58. Copper flasks (capacity 16 oz.).
59. Litmus paper books—

    Blue—6.

    Red—6.

60. Turmeric paper—2 books.
61. Microscope slides showing disease germs.
62. Dissecting box—1.
63. Students' chemical balance with grain and gramme weights—1.
64. Rough scales with ounce weights—1.
65. Vaccination lancet—1.
66. Glass tubes and rods (assorted), ½ lb. each.
67. Forceps (nickelled)—2.
68. Knife—1.
69. Scissors—1.
70. Spatula (4″ long)—2.
71. Porcelain mortar and pestle—1.
72. Corks (assorted)—1 gross.
73. Cork-borer—1 set.
74. Single copper water-bath (6″ diameter with rings of different sizes)—1 set.
75. Deflagrating spoons—2.
76. Kerosene stove (Primus)—1.
77. Glass chimneys—2.
78. Mirror—1.
79. Filter papers (assorted)—1 packet each.
80. Burette, stand with clamps—1.
81. Filter stand (wooden)—2.
82. Blow-pipe (mouth)—2.
83. Files, triangular, 6″—1.
84. Files, flat, 8″—1.
85. Retort stand with rings—2.
86. India-rubber tubing ¼″, ⅛″ diameter—4 yards each.
87. Bunsen burner—2.
88. Cork-presser—1.
89. Magnet (horse-shoe-shaped)—1.
90. Pinchcocks—3.

FERMENTS.

(*a*) Rennet—½ oz.
(*b*) Diastase—½ oz.
(*c*) Yeast—½ oz.
(*d*) Lactic acid ferment—½ oz.
(*e*) Pepsin—2 drams.
(*f*) Zymin—2 drams.

SPECIMENS.

(A) *Food.*

(*a*) Different kinds of rice.
(*b*) Different kinds of dal (pulses).
(*c*) Different kinds of other cereals—wheat, barley, Indian corn, Indian oats, jawar, etc.
(*d*) Different kinds of sugar.
(*e*) Different oil-producing substances—linseed, mustard seed, cocoa-nut, groundnut, sorgoja, mowa seeds, til, etc.
(*f*) Different kinds of starches—rice, wheat flour, barley, arrowroot, sati, sago, cassava, etc.

(B) *Antiseptics or Disinfectants.*

(*a*) Carbolic Acid (Pure).
(*b*) Crysylic Acid.
(*c*) Bleaching powder.
(*d*) Permanganate of Potassium.
(*e*) Perchloride of Mercury.
(*f*) Sulphur.
(*g*) Phenyle, Lysol, etc.
(*h*) Charcoal.
(*i*) Soap, Common and Carbolic.
(*j*) Formalin.
(*k*) Red Oxide of Mercury.

(C) *Minerals and Clay.*

(*a*) China clay.
(*b*) Common clay of different composition.
(*c*) Sand.
(*d*) Gravel.
(*e*) Portland cement.
(*f*) Lime-stone.
(*g*) Quartz, flint, rocks, etc.

(D) *Insects.*

(*a*) Mosquitoes (anopheline and cubex).
(*b*) Flies (different varieties common in the country).
(*c*) Bugs.
(*d*) Intestinal worms (round-worm, hook-worm).

(E) *Preserved Internal Organs.*

Liver, Spleen, Lungs, Heart, Brain, Stomach, Kidneys, etc.

EXERCISE APPLIANCES.

(*a*) Dumb-bells (ordinary and grip).
(*b*) Indian Clubs.
(*c*) Developers.
(*d*) Iron balls.

CHEMICALS.

Acid Acetic—1 lb.
Acid Boric (pulv.)—1 lb.
Acid Citric—4 oz.
Acid Hydrochloric—1 lb.
Acid Nitric—1 lb.
Acid Oxalic—4 lbs.
Acid Sulphuric—1 lb.
Acid Tartaric—4 oz.
Sodi Bicarbonate—4 oz.
Sodi Carbonate—1 oz.
Sodi Phosphate—½ oz.
Sodi Hydrate—1 lb.
Calcium Oxide (Lime)—1 lb.
Calcium Carbonate (Chalk)—1 lb.
Calcium Chloride—½ oz.
Distilled water—4 quart bottles.
Alum—2 oz.
Magnesium Sulphate.
Manganese Dioxide—2 oz.
Potassium Iodide—½ oz.
Potassium Chromate—½ oz.
Potassium Ferrocyanide—½ oz.
Potassium Chloras—4 oz.
Potassium Bicarb—4 oz.
Potassium Nitrate—8 oz.
Potassium Permanganate—1 oz.
Marble—2 lbs.
Liq. Ammonium fort—1 lb.
Glycerine—4 oz.
Ammonium Chloride—1 oz.
Ammonium Oxalate—½ oz.
Ammonium Carbonate—1 oz.
Barium Nitrate—½ oz.
Ferrous Sulphate—1 oz.
Ferric Chloride—½ oz.
Granulated Zinc—4 oz.
Granulated Tin—1 oz.
Zinc Sulphate—½ oz.
Yellow Phosphorus—½ oz.
Lead Nitrate—½ oz.
Red Oxide of Mercury—½ oz.
Silver Nitrate—¼ oz.
Copper Sulphate—1 oz.
Borax—1 oz.

Any other chemicals may be purchased as required.

J. CHAKRAVORTI, *Registrar.*

Orders by the Vice-Chancellor and Syndicate of the Calcutta University.

NOTIFICATION No. T. 386.

Senate House, the 22nd December 1934.

MATRICULATION EXAMINATION, 1936.

In modification of previous notification on the subject the following books are prescribed to be read in Tamil Vernacular for the Matriculation Examination in 1936:—

Thiruthondar Periya Puranam by Viswanatha Pillai (Vidyanupalaya Printing Press, Madras), page 22—Sundaramurthy Nayanar Thiruthonda Thukai, verses 1-11 and also pages 25 and 26.

Balaramayanam, pages 3-41. To be had of Messrs. Jayam and Co., Publishers and Booksellers, Egmore, Madras.

Balabharatam, pages 3-50. To be had of Messrs. Jayam and Co., Publishers and Booksellers, Egmore, Madras.

Nalavazhi (published by Messrs. P. N. Chidambara Mudaliar Bros., Madura).

J. CHAKRAVORTI, *Registrar.*

NOTIFICATION.

Chittagong, the 15th January 1935.

An Examination in the Art and Practice of Teaching for teachers of English subjects in Boys' Secondary Schools (aided and unaided) including Madrasahs in the Chittagong Division will be held at the Chittagong Normal School on the 8th March 1935, at 11 a.m., and on the following date, if necessary. The examination of teachers of vernacular subjects and oriental classical languages of the same schools will also be held on the same date and at the same place and hour.

2. The following teachers are eligible for the examination:—

(*a*) Teachers of English subjects who have passed (*i*) the Matriculation or some higher University examination, or (*ii*) the Middle English Scholarship Examination or the terminal examination at the end of the middle stage of instruction. The examination of these teachers will be conducted in English.

(*b*) Teachers of vernacular subjects who have passed the University examinations named in (*a*) above or the Middle Vernacular Scholarship Examination, or the terminal examination at the end of the middle stage of instruction. The examination of these teachers will be conducted in vernacular.

(*c*) Pandits and Maulvis employed in teaching oriental classical languages other than pandits in Sanskrit *tôls* and Maulvis in Madrasahs. They must have passed the Sanskrit Title Examination or the Final Examination of a senior grade Madrasah. The examination in the case of these classes of teachers will be conducted either in English or vernacular at the option of the candidate.

3. The examination will consist of—

(*a*) A practical examination in class control, the candidate being required to keep a class of, at least, a dozen boys attentive and fully occupied throughout a lesson.

(*b*) A practical test of teaching ability, the candidate being required to give two lessons on any two of the subjects—English, Bengali, Sanskrit, Arabic, Persian, Urdu, History, Geography, Arithmetic, Algebra, Geometry, etc.

(*c*) An oral examination, in which the Inspector of Schools or other examiner will ask questions on the art of teaching object lessons, class management, organisation and discipline.

The following books are recommended for study by the candidate:—

(*i*) For teachers of English subjects—

(1) Indian Teachers' Guide, by P. Wren.

(2) Indian School Organisation, by P. Wren.

(3) Suggestions for the Consideration of Teachers (Board of Education, Whitehall).

(4) Talk to Teachers (James).

(*ii*) For teachers of vernacular subjects—

(1) বিবিধ বিধান, by A. N. Adhikari.

(2) Teachers' Manual, by Khan Bahadur Ahsanullah.

(3) পাঠ টীকা লিখিবার প্রণালী, by Jagannath Dey.

(4) মনোবিজ্ঞান, by S. C. Brahmachary.

(5) শিক্ষাবিজ্ঞান, by Khan Sahib Abdur Rahaman Khan, M.A., B.L.

(*iii*) Teachers of oriental classical languages may study any of the above sets of books.

4. Intending candidates from high schools and senior Madrasahs should submit their applications through the Head Masters or Superintendents, as the case may be, and teachers of middle schools and junior Madrasahs through the Subdivisional Inspectors of Schools, so as to reach this office not later than the 28th February 1935. Every candidate will produce at the time of the examination the certificate of his having passed the University or other examination, which admits him to the present examination. The following information should accompany the application:—

(1) Name (in full).

(2) Name of father (in full).

(3) Names of native village and district.

(4) Last examination passed.

(5) Year of passing.

(6) Period of service as a teacher.

(7) Present appointment with date (mention whether he is a teacher of English subjects or vernacular subjects or of oriental language).

(8) Two class subjects in which he wishes to be examined.

(9) Signature of applicant with full address.

5. Every candidate must bring with him at the time of the examination two lesson notes on the subjects in which he wishes to give lessons. These notes should be made over to the examiner at the time of the practical examination.

M. A. JAAFAR,

Inspector of Schools, Chittagong Division.

Dacca Division.

Dacca, the 18th January 1935.

List of successful candidates in the Primary Maktab Final Examination, 1934.

I indicates 1st Division.
II indicates 2nd Division.

Candidates marked with asterisks have passed in English optional.

Mymensingh District.

Tangail Bindubashini High School Centre.

Roll No.	Name.	Division.
	Bedbari F. Primary.	
1	*Bhupati Mohan Paul	I
2	*Sachindra Nath Paul	I
	Aynapur F. Primary.	
3	*Jitendra Mohan Mitra	I
4	*Hemendra Kumar Karmaker	I
5	*Bijoya Lal Karmaker	I
6	*Jogendra Chandra Das	II
	Santosh Jahnavi F. Primary.	
7	*Muktida Kanta Paul	I
8	*Kala Chand Karmaker	I
	Alwa Final Primary.	
9	*Rasik Chandra Basak	I
10	Purna Chandra Sil	II
11	*Satyendra Nath Roy Choudhury	II
	Kowljani F. Primary.	
12	*Harendra Kumar Sarker	II
13	*Sushil Chandra Sarker	I
	Kaijuri Final Primary.	
15	*Priyabrata Guha	I
	Nalsonda F. Primary.	
17	*Jatindra Mohan Sarker	I
18	*Jagadish Chandra Nag	I
19	*Balaram Basak	I
20	Md. Rostam Hossain Mia	II
22	*Makhan Chandra Sil	I
23	Rakhal Chandra Basak	II
25	Radhika Lal Dutt	II
28	Hazrat Ali Mia	I
	Fultara Board Primary.	
29	*Abdul Wahab Mia	I
30	*Abdul Basir Mia	II

Roll No.	Name.	Division.
	Bhaita Maktab.	
31	*Abdur Rahaman Mia	I
32	Raisuddin Mia	II
34	*Makbul Hossain Mia	II
37	Abdur Rahman Mia, II	II
	Nagarpur U. P.	
38	*Manojendra Lal Choudhury	I
39	*Girija Sanker Saha	I
40	*Gopi Lal Saha	I
41	*Bhabani Sankor Saha	I
42	*Akhil Chandra Dhar	I
43	*Rash Behari Das	I
44	*Nishi Kanta Saha	I
45	*Narayan Chandra Saha	I
	Arrah U. P.	
46	*Mozibar Rahaman Miah	I
47	*Hemanta Kumar Sil	I
	Natang U. P.	
55	*Jasim Uddin Miah	II
56	*Jahir Uddin Miah	I
	Khas-Shahjani U. P. Maktab.	
57	*Shamsuddin Miah	I
58	*Asgar Ali Miah	I
59	*Abdul Jabbar Sarkar	I
	Kazibari U. P. Maktab.	
60	*Abul Mansur Ahmed	I
	Koyla U. P.	
62	Abdur Rouf Khan	I
63	Mofizur Rahman Khan	I
65	Md. Ek-haque Khan	II
	Khaliajani Board Primary.	
66	*Paresh Chandra Sarker	I
	Bhowanipur Board Primary.	
69	*Syed Majibar Rahman	II
70	*Mofizar Rahman Talukdar	II
	Pukuria Ichapur Board Primary.	
71	*Md. Mukshed Ali	I
72	*Md. Muzafar Ali	I
73	Ganesh Chandra Saha	I
74	*Md. Samsuddin	I
75	Naib Ali Mia	II
76	Shashadhar Sarma	II
	Bellia Board Primary.	
78	*Md. Abdul Hai	II

Roll No.	Name.	Division.
	Haripur Board Primary.	
83	Md. Reazuddin Tarafder	II
90	Chandra Nath Saha	II
	Dashakia Primary.	
91	*Khandaker Sadat Ali	I
92	*Jatindra Chandra De	I
94	*Santiram Karmakar	I
95	*Manindra Chandra Paul	II
	Bankin Primary.	
96	*Manindra Chandra Basu	I
	Daujani Primary.	
98	*Ramesh Chandra Saha	I
	Rouha Primary.	
101	*Monindra Mohan Acharjee	I
	Bartha Primary.	
102	*Pulin Bohari Majumder	I
	Satutia Maktab.	
105	*Musammat Ayesha Khanm	I
106	*Md. Sekendar Ali	I
107	*Md. Aftabuddin Mia	I
108	*Abdul Aziz Bhuiya	I
	Samna Maktab.	
110	*Md. Abdul Qader Mia	I
111	*Kasimuddin Ahmed	I
	Benimadhab Golganda Maktab.	
112	*Khandaker Habibar Rahaman Talukdar	I
113	*Md. Majibar Rahaman	I
114	*Mohamedali Talukdar	I
	Shadhuti Maktab.	
116	*Makhan Lal Das	I
117	*Md. Alauddin	I
	Gopalpur Board Primary.	
121	Kala Chand Kaibarta	II
122	Hasak Ali Sarkar	II
123	Ramesh Chandra Ghose	II
	Sanakbaira U. P. Maktab.	
124	Md. Abul Kasem	I
126	*Khandker Abdul Karim	I
127	*Md. Abdul Kadir	I
128	*Md. Alfazuddin	II
129	Md. Maqbul Hussain	II

Roll No.	Name.	Division.
	Kharpara Board Primary.	
130	*M. Abdus Samad	II
	Harisha Eden Maktab.	
131	Md. Fazar Ali Khan	II
132	*Mahammad Ali Mia	I
133	Khandkar Ershad Ali	II
	Jamtail U. P. Maktab.	
134	*Eshakuddin	I
135	*Md. Intaz Ali	I
	Mohail U. P. Maktab.	
136	Md. Bahazuddin	II
137	Md. Alauddin	II
	Banamali Maktab.	
139	Md. Mafizuddin	II
	Baguata U. P. Maktab.	
142	*Mucha Ram Chandra Pal	II
	Aloa U. P. Maktab.	
143	*Md. Serajul Islam Talukdar	I
144	*Md. Azhar Ali Taluqdar	I
145	*A. K. Shah Md. Abdul Khalik Mia	I
146	*Md. Intaz Ali	I
	Alamnagar Board Primary.	
150	*Jnanendra Nath Pandit	I
151	*Hemanta Kumar Pandit	II
152	*Brindaban Chandra Pal	II
	Bildoga Board Primary.	
153	*Tayyebur Rahman	II
154	Saman Ali Sarkar	II
	Bhutia Board Primary.	
156	*Abhi Manyu Das	I
158	*Prafulla Mohan Chanda	I
161	Upendra Chandra Nama Das	II
162	*Nishi Kanta Dutta	I
	Bharai Primary School.	
163	*Rakhal Chandra Chakraverty	I
164	*Purna Chandra Deb	I
	Konabari Primary.	
166	*Md. Niat Ali	I
	Shahabatpur Primary.	
173	*Shamsur Rahman	I
174	Mohammad Badsha Mia	II

SABKATUDDIN AHMED,
Second Inspector of Schools, Dacca Division.

Burdwan Division.

Chinsura, the 3rd January 1935.

List of candidates elected to Primary and Maktab Final Scholarships for the year 1934.

(The value of each scholarship is Rs. 3 a month and is tenable for two years from 1st January 1935, in any recognised High or Middle Schools or Junior Madrasah having scholarship rights.)

No.	Name of scholar.	Name of the school from which the candidate appeared.	Name of the school at which the scholarship is tenable.
	Burdwan District (9).		
	Sadar Subdivision (4).		
1	Durgapada Haldar	.. Jagdabad Primary	.. Municipal High (Burdwan).
2	Shyamsundar Basu	.. Puratanchak Model Primary	.. Ditto.
3	Haragovinda Guin	.. Joykrishnapore Primary	.. Mankar High (Burdwan).
4	Monoranjan Datta	.. Painta Primary	.. Batanal High (Hooghly).
	Kalna Subdivision (2).		
5	Ajit Kumar Daw	.. Dhamachi Primary	.. Jamna M. E. (Burdwan).
6	Govinda Chandra Pal	.. Belenda Primary	.. Maldanga M. E. (Burdwan).
	Katwa Subdivision (2).		
7	Sk. Habibar Rahman	.. Palishgram Primary	.. Majhigram M. E. (Burdwan).
8	Harakali Mukherjee	.. Khatundi Primary	.. Chanduli M. E. (Burdwan).
	Asansol Subdivision (1).		
9	Provat Kumar Chatterjee	.. Kalipandya Municipal Primary	.. Asansol E. I. R. Indian High (Burdwan).
	Birbhum District (6).		
	Sadar Subdivision (3).		
1	Saktipada Saha	.. Jalandi Primary	.. Khujutipara High (Birbhum).
2	Susaran Chandra Mandal	.. Bhatra Kazipara Primary	.. Labpur J. L. High (Birbhum).
3	Anadi Bhusan Laha	.. Haranandapur Primary	.. Kirnahar S. C. High (Birbhum).
	Rampurhat Subdivision (3).		
4	Ardhendu Kumar Banerjee	.. Paikpara Primary	.. Nalhati High (Birbhum).
5	Md. Badrooh-zuha	.. Mollarpur Primary	.. Mollarpur High (Birbhum).
6	Ijad Ali	.. Ekdala Jashahari Primary	.. Tejhati M. E. (Birbhum).
	Bankura District (9).		
	Sadar Subdivision (5).		
1	Tulsidas Pahari	.. Bonkati Primary	.. Simlapal M. E. (Bankura).
2	Naba Kumar Mandal	.. Ditto	.. Khatra High (Bankura).
3	Bhupati Nath Dhar	.. Ditto	.. Gargaria M. E. (Bankura).
4	Pravakar Majhi	.. Bhutsahar Board Primary	.. Panchmura M. E. (Bankura).
5	Manasa Ram Kundu	.. Nityanandapur Primary	.. Chausal M. E. (Bankura).
	Vishnupur Subdivision (4).		
6	Durgapada Batabyal	.. Bhagwanbati Primary	.. Balsi M. E. (Bankura).
7	Bhairab Chandra Mandal	.. Sihas Board Primary	.. Kotalpur High (Bankura).
8	Kalipada Khan	.. Chakrakankabati Primary	.. Ditto.
9	Bankim Chandra Bit	.. Sonamukhi Practising Primary	.. Sonamukhi High (Bankura).
	Midnapore District (13).		
	Sadar Subdivision (3).		
1	Shyam Chandra Sinha	.. Midnapore Practising Primary	.. Midnapore Hastings M. E. (Midnapore).
2	Khagendra Nath Mahapatra	.. Khushbashuhat Board Primary	.. Baramohanpur M. E. (Midnapore).
3	Kishori Mohan Biswas	.. Moupal Primary	Bhimpore High (Midnapore).

No.	Name of scholar.	Name of school from which the candidate appeared.	Name of the school at which the scholarship is tenable.
		Jhargram Subdivision (1).	
4	Basudeb Basu	Bandhgora Primary	Jhargram High (Midnapore).
		Tamluk Subdivision (5).	
5	Sk. Setar Baksh	Bhemua Primary	Tilantapara M. E. (Midnapore).
6	Harish Chandra Maity	Mathuri Primary	Tamluk H. E. (Midnapore).
7	Sudhir Chandra Manna	Kismat Khaira Primary	Bainshabchak M. E. (Midnapore).
8	Bhusan Chandra Maity	Mathuri Primary	Tamluk High (Midnapore).
9	Sita Nath Bhunia	Chunkhabari Jatsnamayi Primary	Reapara M. E. (Midnapore).
		Ghatal Subdivision (1).	
10	Mahadeb Chandra Majhi	Panna Primary	Ghatal High (Midnapore).
		Contai Subdivision (3).	
11	Narayan Prosad Senapati	Dahadaya Primary	Gobra M. E. (Midnapore).
12	Narayan Prosad Pradhan	Kalindi Primary	Islampore M. E. (Midnapore).
13	Gobinda Prasad Maity	Jalibishnupore Primary	Bibhisanpur M. E. (Midnapore).
		Hooghly District (7).	
		Sadar Subdivision (2).	
1	Miss Razia Begum	Moshra Dulepara Primary	Chinsura Balika Bani Mandir (Hooghly).
2	Jyotish Chandra Patra	Majinan Free Primary	Bhastara High (Hooghly).
		Serampore Subdivision (2).	
3	†Ashutosh Pal	Boinchipota Free Primary	Anandanagore M. E. (Hooghly).
4	†Bata Krishna Das	Janai Training Primary	Janai Training High (Hooghly).
		Arambagh Subdivision (3).	
5	Radhanath Ghosh	Pukhuria Primary	Anur M. E. (Hooghly).
6	Bankim Chandra De	Ditto	Surulchaumatha M. E. (Hooghly).
	Biswanath Banerjee	Ditto	Anur M. E. (Hooghly).
		Howrah District (3+1*).	
		Sadar Subdivision (1+1).*	
1	Abdur Samad Haldar	Baxera Chittaranjan M. F. Primary	Santragachi Kedarnath Institution (High) (Howrah).
2	*Kinkar Prosad Banerjee	Betaitala M. F. Primary	Sibpore D. B. Institution (High School) (Howrah).
		Uluberia Subdivision (2).	
3	Bijoy Krishna Khentua	Paltaberia Primary	Radhapore M. E. (Howrah).
4	Phelaram Mondal	Ditto	Ditto.
		Scholarships reserved for backward classes (11).	
1	Narayan Chandra Ruidas	Kalna Mcl. Primary (Burdwan)	Kalna Raj High (Burdwan).
2	Muneswar Dusadh	Fakirbagan Hindi Free Primary (Howrah).	Ripon Collegiate (Howrah).
3	Amalya Kumar Mandal	Sillaberia Primary (Midnapore)	Khedgree M. E. (Midnapore).
4	Nilmani Rajak	Champdany Free Primary (Hooghly)	Baidyabati B. M. Institution (Hooghly).
5	Kalipada Sarkar	Pum Primary (Hooghly)	Batanal High (Hooghly).
6	Nilkamal Mandal	Pansila Primary (Howrah)	Shyampur High (Howrah).
7	Baidya Nath Chowdhury	Paikpara Primary (Birbhum)	Nalhati H. P. High (Birbhum).
8	Durlav Chandra Roy	Rangtakhali Primary (Hooghly)	Baradangal High (Hooghly).
9	Kamala Kanta Somandal	Kansra Primary (Bankura).	Gangajalghati M. E. (Bankura).
	Narayan Chandra Mandal	Sripore Primary (Burdwan)	Asansol E. I. R. Indian High (Burdwan).
11	Sudhakar Bayen	Aligram Jubati Primary (Birbhum)	Kirnahar S. C. High (Birbhum).

K. C. RAY,

Inspector of Schools, Burdwan Division.

*To be awarded by the Howrah Municipality.
†Has stood first in the Division.

Dacca Division.

Dacca, the 12th January 1935.

List of candidates who have been awarded Primary (Maktab) Final Scholarships, 1934.

(Each scholarship is of the value of Rs. 3 and tenable for two years from 1st January 1935.)

The scholarship-holders should join their schools within one month from the date of publication of the award.

No.	Name of scholar.	Name of school from which appeared.	Name of school at which the scholarship is tenable.
	Dacca District.		
	Dacca Sadar subdivision—Open scholarships.		
1	Musammat Anwara Begum	Abdullapur Primary, I	Eden High School, Dacca
2	Gopinath Das	Jinjira P. M. F. Primary	Dacca Collegiate High School.
	Manikganj subdivision—Open scholarships.		
1	Rakhal Chandra Saha	Helachia Primary	Navagram M. E. School, Dacca.
2	Ayesha Khatoon	Noadda Board Primary	Manikganj S. K. M. E. School for Girls.
	Narayanganj subdivision Open scholarships.		
1	Mudasser Hussain Khandaker	Rajadi Primary	Ghorasal M. E. School.
2	Mouzennessa	Jhowakandi Primary	Muslem Girls' M. E. School, Dacca.
	Munshiganj subdivision—Open scholarships.		
1	Arun Chandra Das Gupta	West Baherak Primary	Chanchurtala Siddeswari High School.
2	Jogesh Chandra Gope	Sreenagar Primary, I	Kola M. E School.
	Special scholarships reserved for Muhammadans.		
1	Md. Ataur Rahman	Mantala Primary	Manohardi M. E. School.
2	Abdul Maleque Molla	Perabo Board Primary	Dacca Government Moslem H. E. School.
3	Khudeza Khatoon	Seraznagar Primary	Adiabad High School.
	Scholarships reserved for backward classes.		
1	Kanai Lal Das	West Baherak Primary	Chanchurtola Siddeswari High School.
2	Kshitish Chandra Mahattam	Bhulta Primary	Duptara High School.
3	Chand Mohan Nama Das	Kaliakair Board Primary	Shabazpur M. E. School.
	Mymensingh District.		
	Mymensingh Sadar subdivision—Open scholarships.		
1	Md. Aktaruddin	Baghan Maktab	Mymensingh Zilla School.
2	Mohiuddin Mia	Mantala Board Primary	Ditto.
	Tangail subdivision—Open scholarships.		
1	Musammat Ayesha Khatoon	Satutia Maktab	Mymensingh Vidya Mayee High School for Girls.
2	Manujendra Lal Chaudhury	Nagarpur Primary	Nagarpur High School.
	Jamalpur subdivision—Open scholarships.		
1	Sekendar Ali	Sanarchar Board Primary	Bahadurabad M. E. School.
2	Jugal Kishore De Sarker	Nayapara Board Primary	Singhjani High School.
	Netrakona subdivision—Open scholarship.		
1	Kanakprobha Biswas	Budhi Primary	Kishoreganj Girls' M. E. School.
	Kishoreganj subdivision—Open scholarships.		
1	Afsar Uddin Ahmed	Lohajuri Board Primary	Kathiadi M. E. School.
2	Md. Khorshed	Bara Azaldi Board Primary	Kodalia High School.
	Special scholarships reserved for Muhammadans.		
1	Md. Aftabuddin	Baghan Maktab	Dhalla High School.
2	Elahi Baksha	Beara Patuli Maktab	Senbari High School.
3	Abul Mansur Ahmed	Kazibari Maktab	Nagarpur High School.
	Scholarships reserved for backward classes		
1	Nani Gopal Basak	Barapara Maktab	Kishoreganj R. U. High School.
2	Kumudranjan Das	Khalapara Maktab	Iswarganj High School.
3	Joykumar Das	Ikaratia Primary	Teligati M. E. School.
4	Mohendra Chandra Sutradhar	Dhuldia Primary	Banagram High School.

No.	Name of scholar.	Name of school from which appeared.	Name of school at which the scholarship is tenable.
		Faridpur District.	
		Faridpur Sadar subdivision—Open scholarships.	
1	Dhirendra Nath Mitra	.. Khalilpur Board Primary	.. Shibrampur M. E. School.
2	Quazi Md. Abu Yusaf	.. Kawalibera Maktab	.. Faridpur Zilla School.
3	Jainuddin Mia	.. Sadarpur Board Primary	.. Baisrasi High School.
		Madaripur and Gopalganj subdivisions—Open scholarships.	
1	S. M. Lokeman Hakim	.. Gopalganj Islamia Maktab	.. Paikkandi Muslim M. E. School.
2	Chittaranjan Somaddar	.. Bhojergati Primary	.. Gopalganj M. N. Institution.
3	Basudeb Biswas	.. Majhigati Primary	.. Orakandi Mead H. E. School.
4	Manindra Chandra Pal	.. Angaria Bazar F. Primary	.. Rudrakar H. E. School.
		Goalundo subdivision—Open scholarship.	
1	Abdul Jabber	.. Majbari Maktab	.. Majbari M. E. School.
		Special scholarships for Muhammadans.	
1	Md. Gholum Mustafa Mia	.. Mulfatganj Maktab	.. Saldah J. M.
2	Shaikh Abdul Hoque	.. Hamirdi Maktab	.. Bhanga High School.
		Scholarships reserved for backward classes.	
1	Sukh Lal Bala	.. East Gobra Primary	.. Gopalgonj S. N. Academy.
2	Jogendra Nath Das	.. Dharonda Board Primary	.. Khanderpar M. E. School.
		Bakarganj District.	
		Sadar subdivision—Open scholarships.	
1	Md. Amjed Ali Howlader	.. Dinar F. Maktab	.. Barisal Zilla School.
2	Abdul Jabbar	.. Manpasa F. Maktab	.. Bawkati High School.
		Bhola subdivision—Open scholarships.	
1	Khorshed Ahmed	.. Bejoypur U. B. F. Maktab	.. Dewla M. E. School.
2	Abdul Motaleb	.. Fakirerhat F. Maktab	.. S. Tobgi M. E. School.
		Patuakhali subdivision—Open scholarships.	
1	Md. Abdul Hamid	.. Ayla Adabaria F. Maktab	.. Barguna Moslem H. E. School.
2	Abdur Rasid Mollah	.. S. Pangasia F. Maktab	.. Patuakhali Jubilee High School.
		Pirojpur subdivision—Open scholarships.	
1	Niharkana Sarker	.. Santihar F. Primary	.. Illuhar High School.
2	Golap Jan	.. Jhanjhania F. Maktab	.. Sutiakati Girls' J. M.
		Special scholarships reserved for Muhammadans.	
1	Md. Yasin Sikdar	.. Charbaria Lamchari F. Maktab	.. Barisal Zilla High School.
2	Abdul Karim Howladar	.. Dhalua F. Maktab	.. Barguna Moslem High School.
3	Jobeda Khatun	.. Khudrakati F. Maktab	.. Halima Khatun Girls' J. M.
		Scholarships reserved for backward classes.	
1	Surendra Nath Mandal	.. Balibabla F. Maktab	.. Samudaikati M. E. School.
2	Chandra Kumar Baidya	.. Joypur F. Primary	.. Ditto.
3	Jatindra Nath Howladar	.. Gouripur Good Hope F. Primary	.. Bhandaria Behari High School.
4	Jogendra Nath Mistry	.. Bhimruli Board Primary	.. Kirtipasa High School.

ABUL HASHEM KHAN CHAUDHURY,

Inspector of Schools, Dacca Division.

Presidency Division.

40-1A, Free School Street, Calcutta, the 19th January 1935.

PRIMARY (MAKTAB) FINAL EXAMINATION, 1934.

The following candidates have been awarded scholarships of Rs. 3 a month each tenable for two years, with effect from the 1st January 1935, subject to the usual conditions of good conduct and satisfactory progress :—

No.	Name.	Name of school from which the candidate appeared.	Name of school where the scholarship will be tenable.
	Calcutta (6).		
	Two scholarships for general competition.		
1	Kasinath Bhattacharjee	.. Dharmadas Trust C. F. P. Model School	Puddopukur Institution, Calcutta.
2	Abani Ranjan Ghosh	.. Ishan Free U. P. School	.. Mitra Institution (Main), Calcutta.
	One scholarship reserved for Muhammadans.		
1	Muhammad Sagheer	.. Dhankheti U. P. Maktab	.. Matiaburuz H. E. School, Calcutta.
	One scholarship for Deaf and Dumb School.		
1	Makhan Lal Mazumdar	.. Calcutta Deaf and Dumb School	.. Calcutta Deaf and Dumb School.
	Two scholarships reserved for educationally backward classes.		
1	Prabhash Chandra Bag	.. 52B, Russa Road South C. F. P. School.	Satyabhama Institution, Calcutta.
2	Brijlal Maji	.. 29A, Sastitala Road C. F. P. School	Narkeldanga George H. E. School, Calcutta.
	24-Parganas (7).		
	Two scholarships for Sadar subdivision.		
1	Umarani Debi	.. Mahinagar U. P. School	.. Ballygunj Girls' H. E. School, Calcutta.
2	Kazi Ashraf Hossain	.. Jorabagan Maktab	.. Goria H. E. School, 24-Parganas.
	Two scholarships for Diamond Harbour subdivision.		
1	Nepal Chandra Ghosh	.. Chak Subadhi K. M. U. P. School	Usthi H. E. School, 24-Parganas.
2	Ajit Kumar Haldar	.. Badartala U. P. School	.. Natunhat M. E. School, 24-Parganas.
	One scholarship for Basirhat subdivision.		
1	Amar Nath Mitra	.. Bhabla Free Primary School	.. Bhabla H. E. School, 24-Parganas.
	Two scholarships for Barasat and Barrackpore subdivisions.		
1	Nirmal Chandra Basu	.. North Baranagar U. P. School	.. Rameswar M. E. School, 24-Parganas
2	Kumari Namita Nandi	.. Sukchar U. P. School	.. Chandanagore Krishnabhabin. Girls' H. E. School, Hooghly.
	Nadia (5).		
	One scholarship for Sadar subdivision.		
1	Protip Chandra Bhattacharjya	Krishnagar Practising U. P. School	Krishnagar A. V. H. E. School, Nadia.
	Two scholarships for Ranaghat and Chuadanga subdivisions.		
1	Mahabir Chandra Chowdhury	.. Nasrapara U. P. School	.. Ranaghat P. C. H. E. School, Nadia.
2	Prahlad Chandra Gan	.. Dattapulia U. P. School	.. Ditto.
	One scholarship for Kushtia subdivision.		
1	Manindra Nath Das	.. Santoshpur U. P. School	.. Jagannathpur M. E. School, Nadia.
	One scholarship for Meherpur subdivision.		
1	Santosh Kumar Sircar	.. Chachania U. P. Maktab	.. Shikarpur H. E. School, Nadia.
	Murshidabad (5).		
	Two scholarships for Sadar subdivision.		
1	Muhammad Abdur Rashid	.. Chandpur U. P. Maktab	.. Jitpur M. E. School, Murshidabad.
2	Muhammad Abdul Karim	.. Ditto	.. Ditto.

No.	Name.	Name of school from which the candidate appeared.	Name of school where the scholarship will be tenable.
		One scholarship for Lalbag subdivision.	
1	Sadiar Rahman	.. Nashipur K. B. U. P. School	.. Bhagwangola M. E. School, Murshidabad.
		One scholarship for Jangipur subdivision.	
1	Afsar Ali Biswas	.. Mamimtala U. P. Maktab	.. Jangipur H. E. School, Murshidabad.
		One scholarship for Kandi subdivision.	
1	Jangaleswar Pal	.. Rajhat U. P. School	.. Sundarpur M. E. School, Murshidabad.
		Jessore (6).	
		Two scholarships for Sadar subdivision.	
1	Md. Joynal Abedin	.. Gobukhali U. P. Maktab	.. Khoirtola Junior Madrasah, Jessore.
2	Sachinath Biswas	.. Sabharpara U. P. School	.. Rajghat H. E. School, Jessore.
		One scholarship for Bongaon subdivision.	
1	Md. Amirali Biswas	.. Lakshmanpur U. P. School	.. Navaran M. E. School, Jessore.
		One scholarship for Jhenidah subdivision.	
1	Braja Gopal Biswas	.. Bhawanipur U. P. School	.. Folio M. E. School, Jessore.
		One scholarship for Magura subdivision.	
1	Amiya Kumar Roy	.. Srikol U. P. School	.. Abaipur H. E. School, Jessore.
		One scholarship for Narail subdivision.	
1	Nirendra Nath Roy	.. Padmabila U. P. School	.. Madartali M. E. School, Khulna.
		Khulna (5).	
		One scholarship for Sadar subdivision.	
1	Sudhir Krishna Mallik	.. Boratia U. P. School	.. Kharnia M. E. School, Khulna.
		Two scholarships for Bagerhat subdivision.	
1	Susil Kumar Mandal	.. Kathali U. P. School	.. Ghatbhoge M. E. School, Khulna.
2	Debendra Nath De	.. Bagmara U. P. School	.. Dasani H. E. School, Khulna.
		Two scholarships for Satkhira subdivision.	
1	Monindra Nath Mondal	.. Benadana U. P. School	.. Nengi M. E. School, Khulna.
2	Abdul Gofur Khan	.. Mukundapur U. P. School	.. Akhrakhola M. E. School, Khulna.
		Scholarships reserved for educationally backward classes.	
1	Binapani Dasi	.. Peara Gandharbapur U. P. School, 24-Parganas.	Where to be tenable will be announced hereafter.
2	Bijanbehari Nath	.. Taki Radhamadhab U. P. School, 24-Parganas.	Taki Government School, 24-Parganas.
3	Srikrishna Mondal	.. Sridharkati U. P. School, 24-Parganas	Dulduli H. E. School, 24-Parganas.
4	Lalit Mohan Gharami	.. Pikhira U. P. School, 24-Parganas ..	Fatehpur H. E. School, 24-Parganas.
5	Kasi Bhusan Haldar	.. Kulpi Practising U. P. School, 24-Parganas.	Kulpi Barada M. E. School, 24-Parganas.
6	Bibhuti Bhusan Mondal	.. Ramnagar U. P. School, 24-Parganas	Gabbaria H. E. School, 24-Parganas.
7	Gosthabehari Nath	.. Mahirampur Raghunath U. P. School, 24-Parganas.	Belsing M. E. School, 24-Parganas.
8	Nitya Gopal Biswas	.. Amjhupi U. P. School, Nadia	.. Meherpur H. E. School, Nadia.
9	Manindra Nath Mal	.. Kayur U. P. School, Murshidabad	.. Bokhara M. E. School, Murshidabad.
10	Binoyendra Nath Das	.. Chhapghati Board U. P. School, Murshidabad.	Nimtita H. E. School, Murshidabad.
11	Subodh Kumar Mondal	.. Sindrani U. P. School, Jessore	.. Bongaon H. E. School, Jessore.
12	Nanda Lal Sarkar	.. Misridiara U. P. School, Jessore	.. Jhikargacha M. E. School, Jessore.
13	Pulin Behari Biswas	.. Sovna Kapalipara U. P. School, Khulna.	Khulna Zilla School, Khulna.
14	Basudev Biswas	.. Nowdubi U. P. School, Khulna	.. Madartali M. E. School, Khulna.

J. M. SEN,

Inspector of Schools, Presidency Division.

State Medical Faculty of Bengal.

Grosvenor House, Calcutta, the 14th January 1935.

NOTICE.

No. 128F.—The undermentioned candidates are declared to have passed the Intermediate Membership Examination held in December 1934 under the old regulations :—

(In alphabetical order.)

Medical College, Calcutta.

Clarke, Kenneth Clayton.
Cloy, George Alexander.
Garstin, Henry A.

II. The undermentioned candidates are declared to have passed the Final Membership Examination held in December 1934 under the old regulations :—

(In alphabetical order.)

Medical College, Calcutta.

Lopes, A. M.

Carmichael Medical College, Belgachia.

Sarkar, Sudhansubhushan.*

*Exempted from appearing in Part II of the examination.

III. The undermentioned candidates are declared to have passed the Final Membership Examination in Part II only held in December 1934 under the old regulations :—

(In alphabetical order.)

Medical College, Calcutta.

Andrade, Cyril B.
Chaves, Lawrence Eugene.
Frederick, Charles Joseph.

IV. The undermentioned candidate is declared to have passed the First Membership Examination held in December 1934 under the new regulations :—

Medical College, Calcutta.

Chakrabarti, Amalendu.

V. The undermentioned candidate is declared to have passed the Second Membership Examination held in December 1934 under the new regulations :—

Medical College, Calcutta.

D'Rozario, Carlyle.

VI. The undermentioned candidate is declared to have passed the Third Membership Examination held in December 1934 under the new regulations :—

Medical College, Calcutta.

Chanda, Atulchandra.

VII. The undermentioned candidates are declared to have passed the Final Membership Examination held in December 1934 under the new regulations :—

(In alphabetical order.)

Medical College, Calcutta.

Ismail Hossain Mondal.

Carmichael Medical College, Belgachia.

Majumdar, Sudhirkumar.

Medical College, Calcutta.

Saha, Dhirendramohan.
Sahamandal, Sudhendusundar.
Sinha, Bhupendranath.

Prince of Wales Medical College, Patna.

Sinha, Rajendraprasad.

R. M. DAS, *Secretary.*

Calcutta University.

NOTICE.

Senate House, the 16th January 1935.

The following subject has been selected for the Onauth Nauth Deb Research Prize for the year 1937 :—

Labour Legislation in British India.

An annual prize consisting of a gold medal worth Rs. 250 and Rs. 750 in cash, to be called the "Onauth Nauth Deb Research Prize," shall be awarded by the University for the promotion of research in Law. The medal shall be presented to the recipient at the annual Convocation.

The competition for the prize shall be open to all persons who have at any time been admitted to a degree in the University of Calcutta. Each candidate for the prize shall be required to submit to the undersigned three typewritten or printed copies of his thesis or record of original work in the above subject under a distinguishing motto. The name of the candidate must also be forwarded at the same time in a sealed envelope with the motto outside.

Every candidate shall further be required to indicate generally in the preface to his thesis, and specially in notes, the sources from which his information is taken, the extent to which he availed himself of the work of others, and the portions of the thesis which he claims as original. He shall also be required to state whether his research has been conducted independently, under advice, or in collaboration with others, and in what respects his investigations appear to him to tend to the advancement of knowledge.

The candidate should also furnish a declaration to the effect that he did not obtain any degree, diploma, studentship, scholarship or prize of any University on the merits of the thesis submitted by him for the above prize.

Under the rules the thesis for the above prize for 1937 must be submitted not later than the 30th November 1936.

B. B. DUTT,
Controller of Examinations (offg.).

Education Department, Bengal.

NOTIFICATION.

Calcutta, the 12th January 1935.

Subject to the usual conditions of good conduct and satisfactory progress, the Durgacharan Laha Medical Scholarship of Rs. 30 a month for the year 1934 is awarded to Mohinimohan Goswami, who passed the First M. B. Examination in 1934 from the Medical College, Calcutta.

The scholarship is tenable at the Medical College, Calcutta, for two years with effect from the 1st June 1934.

The scholar must prepare for the Second M. B. Examination.

J. M. BOTTOMLEY,
Director of Public Instrn., Bengal.

Department of Agriculture, Bengal.

NOTIFICATION.

No. 706.—17th January 1935.—The following students passed the Final Examination of the Secondary Agricultural School, Dacca, held in the month of December 1934:—

(In order of merit.)

First Division.

1. Benode Behari Sutradhar.
2. Chittaranjan Banerjee.

Second Division.

1. Reazuddin Ahmed.
2. Md. Sabderali Sarker.
3. Nripendra Chandra Moulik.
4. Md. Izzatullah.
5. Md. Kazem.
6. Kunja Behari Bhowmic.
7. Raihanuddin Ahmed.
8. Bhupendra Narayan Chakraborty.
9. Abdul Satter Khan.
10. Abdul Basat Khan.

Third Division.

1. Probode Kumar Ganguli.

K. McLEAN,
Director of Agriculture, Bengal (offg.).

Education Department, Bengal.

NOTIFICATION.

Calcutta, the 21st January 1935.

In the list of successful students at the Junior Madrasah Examination held in October and November 1934, published under this office notification, dated the 29th December 1934, at page 200 in Part IB of the *Calcutta Gazette* of the 17th January 1935:—

For

"Kazirchar Junior Madrasah
423 Hemayetuddin Ahmad"

Please *read*

"Sutiakati Junior Madrasah
423 Hemayetuddin Ahmad".

J. M. BOTTOMLEY,
Director of Public Instrn., Bengal.

Presidency Division.

Calcutta, the 21st January 1935.

Addendum to the Results of the Primary (Maktab) Final Examination, 1934, Khulna district, published in the Calcutta Gazette of 10th January 1935.

The following candidate is declared to have passed the Primary (Maktab) Final Examination, 1934:—

"E" indicates that the candidate has passed in English.

Roll No.	Name.	Division.
	Khulna District.	
	Bagerhat Centre.	
	Bagmara U. P.	
19	Susil Ranjan Das (E)	

J. G. SEN, for *Inspector of Schools.*

Education Department, Bengal.

NOTIFICATION.

Calcutta, the 10th January 1935.

Subject to the usual conditions of good conduct and satisfactory progress, the three special Law Scholarships of Rs. 10 each a month provided for Muhammadans and members of the backward classes in Eastern Bengal are awarded to the following students for two years, with effect from the 1st July 1934:—

1st year Law class.

1. Obaidul Huq.
2. Ahiduddin Ahmed.
3. Raimohan Debnath.

The scholarships are tenable at the University of Dacca.

J. M. BOTTOMLEY,
Director of Public Instrn., Bengal.

Orders by the Principal, Eden High School for Girls, Dacca.

Dacca, the 16th January 1935.

The under-mentioned pupils of the Eden High School for Girls, Dacca, are awarded special Middle English Scholarships, with effect from the 1st January 1935, on the usual condition of good conduct and satisfactory progress. The value of each scholarship is Rs. 5 a month and is tenable for four years in the Eden High School for Girls, Dacca:—

(1) Karuna Gupta.
(2) Sachirani Ghosh.

The under-mentioned pupils of the Eden High School for Girls, Dacca, are awarded special Middle Vernacular Scholarships, with effect from 1st January 1935, on the usual condition of good conduct and satisfactory progress. The value of each scholarship is Rs. 4 a month and is tenable for two years in the Eden High School for Girls, Dacca:—

(1) Ramala Ghosh.
(2) Sibani Sen.

The under-mentioned pupils of the Eden High School for Girls, Dacca, are awarded special Lower Primary Scholarships, with effect from the 1st January 1935, on the usual condition of good conduct and satisfactory progress. The value of each scholarship is Rs. 3 a month and is tenable for three years in the Eden High School for Girls, Dacca:—

(1) Sandhyarani Ghosh,
(2) Annapurna Sarcar.
(3) Nirmala Pal.

V. ALPHONSO, *Principal,*
Eden High School for Girls, Dacca.

Registered No. C207

The Calcutta Gazette

THURSDAY, JANUARY 24, 1935.

PART II

Advertisements.

Notices.

Advertisements, Notices, etc., intended for insertion in this part of the Gazette cannot be received after noon on Saturday. All manuscripts and postal remittances must be addressed to Superintendent, Government Printing, Bengal Government Press, Alipore. For the convenience, however, of parties or firms located in Calcutta cash payments of Advertisement charges may be made at Publication Sales Office, Room No. 2, Ground Floor, Writers' Buildings, Calcutta.

Land Sale Notices.

Certificate Department, Jessore Collectorate, Jessore District.

Place of sale—In the Court of the Certificate Officer, Jessore.

Date and hour of sale—20th February 1935, at 12 noon.

Statement of Certificate Sales.

No. and year of certificate.	Name of the certificate-holder.	Name of certificate-debtors.	Demand.	Particulars of property to be sold.
			Rs. a. p.	
628(x) of 31-32	Secretary of State for India in Council.	(1) Giribala Debi, wife of Hara Chandra Mazoomdar, of Pangsa, police-station Pangsa, district Faridpur, c-o Babu Aswini K. Mitra, Deputy Magistrate, Midnapore. (2) Hemanta Bala Debi, wife of Abhoy Charan Mazoomdar, of Pangsa, police-station Pangsa, district Faridpur. (3) Pramila Bala Debi, wife of Satish Chandra Das, of Bishoi Showrail, police-station Pangsa, district Faridpur. (4) Rai Purna Chandra Lahiri Bahadur and Hem Chandra Lahiri of Narail, police-station Narail, at present, 52, Police Hospital Road, Calcutta. (5) Secretary, Faridpur Loan Office, Limited, Faridpur town.	6,192 4 9	T. No. 5578/0, Zamindari Bhar-Fatejangpur, pargana Bhar-Fatejangpur, police-station Sailkupa, land revenue Rs. 3,294-11-8.

Jessore, the 9th January 1935. [ILLEGIBLE], Certificate Officer.

FORM No. 27.

Advertisement of sale.

NOTICE is hereby given that the undermentioned plots of land no longer required by Government, situated along the Eastern Bengal Railway in the district of Bogra, will be put up to sale at 12 noon on the 8th March 1935 corresponding with the Fasli at 24th Falgoon, 1341 B.S.

The purchasers of the several plots of land will be subject to the following conditions :—

1st.—The purchasers will have no power to make any excavations on the land nearer than fifteen feet from the railway boundary or to plough the land nearer than three feet from the same.

2nd.—If the amount of purchase money does not exceed Rs. 100 the whole amount must be paid down at once.

3rd.—If the amount of purchase money exceeds Rs. 100, one-fourth of the amount must be immediately deposited. If the balance be not paid by noon of the fifteenth day after the sale, reckoning the day of sale as one, or if that day be a close holiday, then by the noon of the first succeeding office day, the sale shall be cancelled, the sum deposited being forfeited to Government and the lot again put up for sale at the risk of the defaulting purchaser, after issuing of advertisement, as in the case of original sale.

4th.—The plots of land will be sold subject to an annual assessment of Rs. 45 for a term of 15 years as a temporarily-settled estate to the highest bidders.

5th.—The sale will become final on receipt by the Collector of the orders of the Commissioner confirming it and a regular conveyance will then be granted to the purchaser.

Consecutive lot number.	Name of district.	Pargana and mauza.	Number of mile on which land is situated.	Situated on which side of the railway.	Approximate area of lot in acres and decimals.	Land excluded from sale from each lot.		Commencement and termination of lot.	Boundary of lot.
						Reasons for exclusion.	Acres and decimals.		
1	2	3	4	5	6	7	8	9	10
I	Bogra ..	Pargana Khatta, village Dhulatore (Chhatingram).	55	Eastern side ..	11·34	..	..	I to III	North.—Railway land settlement plot No. 2907. East.—Chhatingram village. South.—Lot No. II. West.—Railway land.
II	Do. ..	Ditto ..	55	Do. ..	33·24	..	..	..	North.—Lot No. I and mauza Chhatingram. East.—Chhatingram and Lot No. III. South.—Chhatingram. West.—Railway land.
III	Do. ..	Pargana Khatta, mauzas Nimaidighi and Chhatingram.	55	Do. ..	15·05	..	..	..	North, South and East.—Villages Chhatingram and Nimaidighi. West.—Lot No. II.
				Total	59·63	..	..	..	

Bogra, the 29th December 1934.

[ILLEGIBLE], *for* Collector.

In the 1st Court of the Sub-Judge, Dacca

ADMINISTRATION SUIT No. 42 OF 1882.

IT is hereby notified for the information of the persons interested in the matter noted below that the legatee Kadir Baksha, son of late Sheak Madar Baksha *alias* Sheik Amir, having died on the 2nd May 1934, the plaintiffs (No. 1) Sarkies John Sarkies, residing at Dacca, the then Secretary to the Dacca Municipality, (No. 2) Ripsimah Bagram, wife of Donald John Bagram, of Calcutta, merchant, (No. 3) Sarah Shircore also of Calcutta, wife of Mechael Carapiet Shircore, a Calcutta broker, and the defendants (No. 2) Mary Stephen, wife of Aratoon Johanes Stephen, residing at Dhuramtola, Calcutta, (No. 3) Martin Sarkies, resident of London in England, in the abovementioned suit have become entitled to the Government Promissory notes to the value of Rs. 15,000 now in deposit in the office of the Controller of Currency, Calcutta, under the provisions of the Will of late Mrs. D. J. Catchick of Armantola, station Sadar, district Dacca, and in accordance with the Court's final order, dated 31st August 1883. The interested parties are hereby informed to take steps to get the refund of the said Government Promissory notes, otherwise they will be escheated to Government.

A. C. GHOSE HAZRA, Sub-Judge.

Dacca, the 19th December 1934. (52—1)

SALE NOTICE.

In the Court of the Sub-Judge of Rangpur.

MONEY EX. CASE No. 142 OF 1934.

The Rangpur Suradesh Bhandar, Ltd., decree-holder,

versus

Jamini Kanta Bhattacharjee, judgment-debtor.

NOTICE is hereby given that the undermentioned property will be sold by the Nazir, Judge's Court, Rangpur, on 5th February 1935 :—

5 as. 11 gds. 1 kr. 3 kag interest in zamindary property, bearing tauzi No. 501 of the Rangpur Collectorate, within district Rangpur, police-station Mithapukur, pargana Surhatta, lat Chakdurgapur, mauzas Tilakpara, Hamidpur, Milanpur and Janakipur. Annual land revenue Rs. 292-12-6.

Estimated value Rs. 500.

S. C. DE, Sub-Judge.

Rangpur, the 20th December 1934. (56—1)

NOTICE FOR SALE.

In the Court of the Sub-Judge, Rangpur.

MONEY EXECUTION CASE No. 304 OF 1934.

Rangpur Loan Office, Ltd., decree-holder,

versus

Nripendra Narayan Rudra, judgment-debtor.

THE public are hereby given notice that the following among other properties of the judgment-debtor will be sold by public auction by the Nazir of the Court of the District Judge of Rangpur in the sale room of the said Court at 12 noon on 5th February 1935, under orders of the Court in the above execution case in execution of a money decree passed on 21st July 1932 in favour of the plaintiff-decree-holder against the defendant-judgment-debtor in Money Suit No. 46 of 1931.

Decree-holder's dues Rs. 34,849-2-9p.

Schedule.

Lot No. 3—The right, title and interest of the judgment-debtor in the zomindary estate comprising tauzi No. 95 of the Rangpur Collectorate within the district of Rangpur, police-station Nilphamari, chakla Kazirhat, mauza Daud, bearing revenue of Rs. 603-4-1p. payable annually. Value Rs. 3,000.

S. C. DE, Sub-Judge.

Rangpur, the 14th January 1935. (162—1)

NOTIFICATION OF SALE.

In the Court of the Sub-Judge at Dinajpur.

MORTGAGE EXECUTION CASE No. 103 OF 1934.

Ashutosh Das, decree-holder,

vs.

Promode Ranjan Chakrabarty, judgment-debtor.

THE 5 as. 4 pies share of lot Jalali, mauzas Jalali and others, bearing tauzi Nos. 484, 484/1, 484/2, 484/3 of the Dinajpur Collectorate under the jurisdiction of police-station Thakurgaon, pargana Salbari in the district of Dinajpur, the total revenue in the sixteen annas share being Rs. 806-9-3, will be sold in auction by the Nazir of the District Judge on 4th February 1935 at 12 noon.

S. BANERJEE, Sub-Judge.

Dinajpur, the 3rd January 1935. (97—1)

NOTICE OF SALE.

In the Court of the Sub-Judge, Dinajpur.

RENT EXECUTION CASE 7 OF 1934.

(1) Rani Basanta Kumari Dassi and others of Paikpara Rajbati, post-office Cossipore, Calcutta, decree-holders,

versus

(1) Meherub Ali Chaudhury of Gobindapur and others of police-station Birol, district Dinajpur, judgment-debtors.

Claim—Rs. 11,807-6 annas.

THE following properties of the judgment-debtor No. (1) will be sold in the Court premises by the Nazir, Civil Court, Dinajpur, at 12 noon, on the 4th February 1935 :—

Schedule.

Eight annas and fifteen gandas share of the zemindary, bearing tauzi Nos. 110/2 and 110 (residuary) of which the Government revenue is Rs. 2,511-14 as. and which includes the mauzas named below within the district of Dinajpur. The approximate value of the property is Rs. 5,000.

Mauzas.		Police-stations.
Sultanpur	..	Pirganj (now Bochaganj).
Mahoshail	..	Ditto.
Muriala including Chotta or Ratna Muriala	..	Ditto.
Atgram	..	Ditto.
Nakduar	..	Ditto.
Jalihar	..	Ditto.
Teghara	..	Birganj.
Mukundapur	..	Ditto.
Mahabatpur	..	Thakurgaon.
And also Jalkar	..	Pirganj (now Bochaganj and Kaharole).
Bankar	..	Ditto.

S. BANERJEE, Sub-Judge.

Dinajpur, the 17th December 1934. (2860—1)

In the 2nd Court of the Munsif, Balurghat, Dinajpur.

RENT EX. SUIT No. 472/34.

Date fixed for sale—4th February 1935.

Claim—Rs. 260-6.

Ramcharit Bhakat and others, decree-holders,

vs.

Hafejuddin Chowdhury, judgment-debtor.

Schedule.

DISTRICT DINAJPUR COLLECTORY, 1130 No. tauzi, lat Hafejuddin, police-stations Tapan and Porsha, pargana Kardaha. Revenue Rs. 258-9-6 pies. Mauzas Bataria, Basakbari and Kurahar, police-station Tapan, Mauza Patari, police-station Porsha.

A. RABBAN, Munsif.

Dinajpur, the 20th December 1934. (45—1)

In the 2nd Court of the Munsif, Balurghat, Dinajpur.

RENT EX. SUIT No. 473/34.

Date fixed for sale—4th February 1935.

Claim—Rs. 163-15.

Ramcharit Bhakat and others, decree-holder,

vs.

Hafejuddin Chowdhury, judgment-debtor.

Schedule.

DISTRICT DINAJPUR COLLECTORY, 1130 No. tauzi, lat Hafejuddin, police-stations Tapan and Porsha, pargana Kardaha. Revenue Rs. 258-9-6 pies. Mauzas Bataria, Basakbari and Kurahar, police-station Tapan, Mauza Patari, police-station Porsha.

A. RABBAN, Munsif.

Dinajpur, the 20th December 1934. (46—1)

In the 3rd Court of the Sub-Judge, 24-Parganas, at Alipore.

RENT EXECUTION CASE No. 228 OF 1934.

Rai Satindra Nath Chowdhury, decree-holder,

versus

Gouri Sanker Biswas and others, judgment-debtors.

IT is hereby notified that on the 4th December 1934 it was ordered that the properties mentioned in the accompanying schedule will be sold in auction on the 13th day of February 1935 at 12 noon by the Nazir of the Court :—

Schedule.

Immovable properties to be sold at auction for arrears of rent mentioned below :—

Mauzas Kanaikati and Kantalberia, Lot No. 163 (1st portion), J. L. Nos. 112 and 113 in pargana Sunderbans lying within the police-station of Hasnabad in the district of 24-Parganas and bearing tauzi No. 1392 of the said Collectorate and being Ganti tenures as comprised in khatian No. 3 with lands in khas possession and other lands and tenures enclosed in khatians of tenants and cutchery houses, tanks, etc.

Mauza Kanaikati—800 acres. 01 decimal.
Mauza Kantalberia—434 acres. 78 decimal.

Total 1,234 acres. 79 decimal.

Of which annual rent of Rs. 5,802 and cesses payable to the landlord, decree-holder. Decretal dues Rs. 32,456-5-6 p. Value Rs. 20,000.

B. P. BASU, Sub-Judge.

Alipore, the 11th January 1935. (195—2)

SALE NOTIFICATION.

In the Court of the Sub-Judge of Birbhum at Suri.

TITLE EXECUTION CASE No. 56 OF 1934.

Jagadamba Loan Co., Ltd., Head Office Labpur, chauki Bolpur, district Birbhum, decree-holder,

versus

Rajendra Narayan Sinha of Raipur, chauki Bolpur, district Birbhum, judgment-debtor.

Lot No. 2.

(*a*) Fractional zamindary right of 8 gandas 3 kara 5 danti of judgment-debtor in mauza Raipur Radhanagar appertaining to tauzi No. 4 of the Birbhum Collectorate of pargana Senbhum shown in separate account No. 21.

(*b*) Fractional zamindary right of 8 gandas 3 kara 5 danti of judgment-debtor in mauza Jungle Choupahari appertaining to the aforesaid tauzi of the Birbhum Collectorate, bearing annual Sadar rental at Rs. 30-11-1½.

N. N. DAS GUPTA, Sub-Judge.

Suri, the 22nd December 1934. (59—1)

In the Court of the District Judge of Nadia.

WAKF CASE No. 2 OF 1934.

Mutwallis—Feroza Bibi and Shekh Belatali of Nabadwip, police-station Nabadwip, district Nadia.

WHEREAS statement of particulars under section 3 of the Mushalman Wakf Act 42 of 1923 has been filed in the above case, it is hereby notified under section 4 of the said Act for the information that any person may apply to the Court by a petition in writing accompanied by the prescribed fee for the issue of an order requiring the Mutwallis to furnish further particulars and statement.

A. M. AHMAD, District Judge.

Krishnagar, the 10th January 1935. (115—1)

In the High Court of Judicature at Fort William in Bengal, in Insolvency.

NOTICE OF ADJUDICATION ORDER.

No. 2 of 1935.

Re Albert Sibbritt, formerly residing at Bombay, Poona, Bangalore and Madras, at present residing at No. 23B, Galstaun Mansion, in the town of Calcutta, by occupation a jockey, *ex parte* the debtor.

P. Mallik, debtor's solicitor.

ON the 10th day of January 1935 an order was made by the High Court of Judicature at Fort William in Bengal in its insolvency jurisdiction adjudging the abovenamed as an insolvent.

Note—All debts to the estate should be paid to me.

Dated this 14th day of January 1935.

G. M. FALKNER, Official Assignee.

In the High Court of Judicature at Fort William in Bengal, in Insolvency.

No. 78 of 1932.

Re Estate Gobind Lal Mohata. (Mangalchand Gobindram.)

NOTICE is hereby given that a dividend is intended to be declared in the above estate.

Persons claiming to be creditors of the above estate are hereby required to file their claims supported by affidavit and necessary vouchers with the undersigned by the 15th February next, after which date no claims received by the undersigned will be considered.

Persons who have already lodged their claims need not file any fresh claim.

A form of proof of debt may be had on application to the undersigned.

G. M. FALKNER, Official Assignee.

10, Old Post Office Street, Calcutta, the 14th January 1935.

(185—1)

In the Court of the District Judge of Bakarganj.

INSOLVENCY CASE No. 21 OF 1934.

NOTICE is hereby given that one Hara Krishna Shaha Poddar, son of late Peari Mohan Shaha Poddar, of Dacca town, at present of Barisal, has applied to be adjudicated an insolvent and that the 30th January 1935 has been fixed for hearing the petition and for examination of the petitioner.

W. McC. SHARPE, District Judge.

Barisal, the 17th January 1935. (211—1)

In the Court of the District Judge of Burdwan.

INSOLVENCY CASE No. 30 OF 1934.

NOTICE is hereby given to the creditors that the insolvency petition filed by Sheikh Golam Nabi, son of late Bahadur Sheikh, of Masagram, police-station Jamalpur, district Burdwan, has been admitted and that 30th January 1935 has been fixed for hearing of the petition.

A. P. NEOGI, Sub-Judge-in-charge.

Burdwan Judge's Office, Burdwan, the 17th December 1934.

(2857—1)

ORDER OF ADJUDICATION.

Section 27 of the Provincial Insolvency Act, V of 1920.

In the Court of the District Judge at Dacca.

INSOLVENCY APPLICATION No. 1 OF 1933.

Rai Revati Mohan Das Bahadur, petitioning creditor,

versus

Chandra Mohan Poddar, debtor-insolvent.

PURSUANT to a petition, dated the 14th January 1933, against Chandra Mohan Poddar, son of late Radha Charan Poddar, resident of Nagarkashba, police-station Munshiganj, district Dacca, and on the application of Rai Revati Mohan Das Bahadur, son of late Gour Chandra Das, resident of 109, Walter Road, police station Sutrapur, district Dacca, and on reading the aforesaid application and hearing the pleader for the petitioning creditor, the debtor having not appeared, it is ordered that the debtor be and the said debtor is hereby adjudged insolvent.

It is further ordered that the debtor do apply for his discharge within six months from this date.

Dated this 10th day of December 1934.

A. N. SEN, District Judge.

(53—1)

In the 3rd Court of the Sub-Judge, Dacca.

INSOLVENCY CASE No. 75 OF 1934.

Rajani Kanta Pal, son of late Kalinath Pal, of Jhitka, police-station Harirampur, district Dacca.

NOTICE is hereby given to all that above-named petitioner has filed a petition for insolvency in this Court on 11th September 1934, and the date of hearing of this case has been fixed on 26th January 1935 for examination of the petitioner.

R. C. SEN, Sub-Judge.

Dacca, the 19th December 1934. (101—1)

In the Court of the District Judge of Dacca.

INSOLVENCY CASE No. 31 OF 1934.

Sheik Abdul, debtor-petitioner.

WHEREAS Sheik Abdul, son of late Mamud Hossain, resident of Vaznadi, police-station Narainganj, district Dacca, has applied to this Court for being adjudicated an insolvent, the 4th February 1935 next has been fixed for the hearing of the aforesaid petition, examination of the petitioner and the creditors.

A. N. SEN, District Judge.

Dacca, the 22nd December 1934. (102—1)

ORDER OF ADJUDICATION.

Section 27 of the Provincial Insolvency Act, V of 1920.

In the Court of the District Judge at Dacca.

INSOLVENCY APPLICATION No. 10 OF 1934.

Dinabandhu Haldar, debtor-insolvent.

PURSUANT to a petition, dated the 22nd March 1934, filed by Dinabandhu Haldar, son of late Baul Chandra Haldar, resident of Kutirhat, police-station Harirampur, district Dacca, debtor, and on the application of the aforesaid debtor himself and on reading the aforesaid application and hearing the pleader for the debtor, it is ordered that the debtor be and the said debtor is hereby adjudged insolvent.

It is further ordered that the debtor do apply for his discharge within six months from this date.

Dated this 2nd day of October 1934.

A. N. SEN, District Judge.

(103—1)

ORDER OF ADJUDICATION.

Section 27 of the Provincial Insolvency Act, V of 1920.

In the Court of the District Judge at Dacca.

INSOLVENCY APPLICATION No. 11 OF 1934.

Panchananda Haldar, debtor-insolvent.

PURSUANT to a petition, dated the 22nd March 1934, filed by Panchananda Haldar, son of late Baul Chandra Haldar, resident of Kutirhat, police-station Harirampur, district Dacca, debtor, and on the application of the aforesaid debtor and on reading the aforesaid application and hearing the pleader for the debtor, it is ordered that the debtor be and the said debtor is hereby adjudged insolvent.

It is further ordered that the debtor do apply for his discharge within six months from this date.

Dated this 2nd day of October 1934.

A. N. SEN, District Judge.

(104—1)

ORDER OF ADJUDICATION.

Section 27 of the Provincial Insolvency Act, V of 1920.

In the Court of the District Judge at Dacca.

INSOLVENCY APPLICATION No. 12 OF 1934.

Nityananda Haldar, debtor-insolvent.

PURSUANT to a petition, dated the 22nd March 1934, filed by Nityananda Haldar, son of late Baul Chandra Haldar, resident of Kutirhat, police-station Harirampur, district Dacca, debtor, and on the application of the aforesaid debtor and on reading the aforesaid application and hearing the pleader for the debtor, it is ordered that the debtor be and the said debtor is hereby adjudged insolvent.

It is further ordered that the debtor do apply for his discharge within six months from this date.

Dated this 2nd day of October 1934.

A. N. SEN, District Judge.

(105—1)

In the Court of the District Judge of Dacca.

INSOLVENCY CASE No. 28 OF 1934.

Naresh Chandra Das, petitioning creditor,

versus

Charu Chandra Das, debtor, opposite party.

WHEREAS Naresh Chandra Das, son of late Radha Raman Das, resident of Banglabazar, police-station Sutrapur, district Dacca, has applied to this Court to adjudge Charu Chandra Das, son of late Gobinda Chandra Das, resident of 53, Digbazar, police-station Sutrapur, district Dacca, an insolvent, the 6th February 1935 next has been fixed for the hearing of the aforesaid application, examination of the debtor and the creditors.

E. B. H. BAKER, District Judge.

Dacca, the 5th January 1935. (110—1)

NOTICE TO CREDITORS OF APPLICATION FOR DISCHARGE.

Section 41 (*1*) of the Provincial Insolvency Act, V of 1920.

In the Court of the District Judge of Dacca.

INSOLVENCY CASE No. 21 OF 1933.

Ram Lal Saha, son of late Durga Charan Saha, resident of Narisha, police-station Dohar, district Dacca, insolvent.

TAKE notice that the abovenamed insolvent has applied at the Court for his discharge, and that the Court has fixed the 4th day of February 1935, at 10 o'clock, for hearing the application.

Dated this 12th day of January 1935.

E. B. H. BAKER, District Judge.

(170—1)

In the Court of the District Judge of Dacca.

INSOLVENCY CASE No. 29 OF 1933.

Rai Mohan Nath, insolvent.

TAKE notice that the order of adjudication, dated 1st May 1934, against Rai Mohan Nath, son of late Kasi Nath Nath, resident of Sherajabad, police-station Tangibari, district Dacca, has hereby been annulled, dated 12th November 1934, for his failure to apply for discharge within the time specified by the Court.

Dated this 12th day of January 1935.

E. B. H. BAKER, District Judge.

(180—1)

In the Court of the District Judge of Dacca.

INSOLVENCY CASE No. 29 OF 1934.

Digendralal Paul, debtor-petitioner.

WHEREAS Digendralal Paul, son of late Nanda Kumar Paul, resident of Hasara, police-station Srinagar, district Dacca, has applied to this Court for being adjudicated an insolvent, the 6th February 1935 next has been fixed for the hearing of the aforesaid petition, examination of the petitioner and the creditors.

E. B. H. BAKER, District Judge.

Dacca, the 12th January 1935. (181—1)

In the Court of the District Judge of Dacca.

INSOLVENCY CASE No. 30 OF 1934.

Radhika Lal Paul, debtor-petitioner.

WHEREAS Radhika Lal Paul, son of late Nanda Kumar Paul, resident of Hasara, police-station Srinagar, district Dacca, has applied to this Court for being adjudicated an insolvent, the 6th February 1935 next has been fixed for the hearing of the aforesaid petition, examination of the petitioner and the creditors.

E. B. H. BAKER, District Judge.

Dacca, the 12th January 1935. (182—1)

In the Court of the District Judge of Faridpur.

INSOLVENCY CASE No. 172 OF 1934.

Gakuleswar Biswas, son of late Krishna Kumar Biswas, of Char Amirabad, police-station Sadarpur, district Faridpur, creditor-petitioner,

versus

(1) Nagar Mridha, (2) Samiraddi Mridha, (3) Wasel Mridha, sons of late Megu Mridha, of Char Amirabad, police-station Sadarpur, district Faridpur, debtors-opposite party.

NOTICE is hereby given that the abovenamed creditor has applied to this Court to have the debtors adjudged insolvents and the 26th January has been fixed for the hearing of the application.

K. C. BASAK, District Judge.

Faridpur, the 15th January 1935. (194—1)

In the Court of the District Judge of Hooghly.

INSOLVENCY PETITION No. 5 OF 1934.

NOTICE is hereby given that Kedarnath Singha Mahabharati *alias* Swami Bhairabanand, of Chinsura, thana Chinsura, district Hooghly, was on the 10th day of April 1934 adjudged an insolvent. The 12th February 1935 has been fixed for framing a schedule and creditors are required to prove their claims on that day.

S. SEN, District Judge.

Chinsura, the 2nd January 1935. (91—1)

In the Court of the District Judge of Hooghly.

INSOLVENCY PETITION No. 36 OF 1934.

NOTICE is hereby given that Shaikh Barkatulla, son of late Shaikh Derastulla, of Enayetpur, thana Haripal, district Hooghly, was on the 6th December 1934 adjudged an insolvent. The 2nd February 1935 has been fixed for framing a schedule and creditors are required to prove their claims on that day.

S. SEN, District Judge.

Chinsura, the 11th January 1935. (188—1)

In the Court of the District Judge of Hooghly.

INSOLVENCY PETITION No. 81 OF 1934.

NOTICE is hereby given that Nagendra Nath Mandal, son of late Sashi Bhusan Mandal, of Kulteghari, thana Tarakeswar, district Hooghly, was on the 4th December 1934 adjudged an insolvent. The 28th January 1935 has been fixed for framing a schedule and creditors are required to prove their claims on that day.

S. SEN, District Judge.

Chinsura, the 2nd January 1935. (190—1)

In the Court of the Addl. District Judge of Hooghly at Howrah.

NOTICE is hereby given under the Provincial Insolvency Act, V of 1920, to his creditors that the insolvency petition of Rameswar Agarwalla, son of late Gangadhar Agarwalla, of 53, Ghoosery Road, thana Malipanchghora, district Howrah, has been admitted by this Court as No. 186 of 1934 and that the 5th February 1935 has been fixed for the hearing thereof.

S. N. MODAK, Addl. District Judge.

Howrah, the 10th January 1935. (193—1)

In the Court of the Additional District Judge of Hooghly at Howrah.

INSOLVENCY CASE No. 168 OF 1933.

NOTICE is hereby given that Sashi Bhusan Maity, son of late Chandra Kumar Maity, of 1, Ram Mohan Mukherjee Lane, thana Shibpur, district Howrah, was on the 10th day of December 1934 adjudicated an insolvent, and directed to apply for final discharge within one month.

S. K. GUPTA, Addl. District Judge.

Howrah, the 22nd December 1934. (107—1)

In the Court of the District Judge of Jalpaiguri.

INSOLVENCY CASE No. 69 OF 1933.

Bhochok Mahammed, petitioner.

BHOCHOK MAHAMMED, son of late Dolo Mahammed of Pathkata, police-station and district Jalpaiguri, having failed to apply for discharge within the time allowed by the Court, the order of adjudication passed on the 24th day of January 1934 is therefore annulled.

J. YOUNIE, District Judge.

Dinajpur, the 16th January 1935.

In the Court of the District Judge of Khulna.

INSOLVENCY CASE No. 8 OF 1933.

IT is hereby notified that the order of adjudication of Bamandas Mukherji, son of late Ambica Charan Mukherji, of Baniakhamar, police-station Khulna, as an insolvent has been annulled on 11th January 1935.

K. C. CHUNDER, District Judge.

Khulna, the 15th January 1935.

In the Court of the District Judge of Khulna.

INSOLVENCY CASE No. 5 OF 1933.

IT is hereby notified that Birendra Narayan Ghose, son of late Naba Nepal, of Khulna, has been finally discharged as an insolvent by the Court's order, dated the 20th December 1934.

K. C. CHUNDER, District Judge.

Khulna, the 21st December 1934. (71—1)

In the Court of the Addl. Sub-Judge, Malda.

INSOLVENCY CASE No. 11 OF 1934.

NOTICE is hereby given under the Provincial Insolvency Act V of 1920 to his creditors that Saikh Omar Ali, son of late Imamdi Saikh, of Chotta-Chaindpur, police-station Harishchandrapur, district Malda, has been admitted by this Court and that 26th January 1935 has been fixed for hearing thereof.

T. N. ROY, Addl. Sub-Judge.

Malda the 20th December 1934. (77—1)

NOTICE TO CREDITORS OF APPLICATION FOR DISCHARGE.

Section 41 (*1*) of the Provincial Insolvency Act, V of 1920.

In the Court of the District Judge at Midnapore.

INSOLVENCY CASE No. 49 OF 1933.

Chaudhury Rash Behari Das Mahapatra, son of late Chaudhury Murari Mohan Das Mahapatra, of Chota Udaypur, pargana Kismat Dantagharai, thana Patashpur, district Midnapore, applicant.

TAKE notice that the abovenamed insolvent has applied at the Court for his discharge, and that the Court has fixed the 2nd day of February 1935 at 10 o'clock for hearing the application.

Dated this 10th day of January 1935.

S. K. HALDAR, District Judge.

(119—1)

NOTICE TO CREDITORS OF APPLICATION FOR DISCHARGE.

Section 41(*1*) of the Provincial Insolvency Act, V of 1920.

In the Court of the District Judge at Midnapore.

INSOLVENCY CASE No. 36 OF 1930.

Rash Behari Modak, son of late Uma Charan Modak, of Ghatal Kristanagar, thana Ghatal, district Midnapore, applicant.

TAKE notice that the abovenamed insolvent has applied at the Court for his discharge, and that the Court has fixed the 2nd day of February 1935 at 10 o'clock for hearing the application.

Dated this 10th day of January 1935.

S. K. HALDAR, District Judge.

(120—1)

In the Court of the District Judge of Noakhali.

INSOLVENCY CASE No. 9 OF 1934.

NOTICE is hereby given that Emrat Ali, son of late Samad Ali Sardar, of Mahammadnagar, police-station Companygunj, district Noakhali, has, on the 24th day of September 1934, applied to this Court for being adjudged an insolvent, and the 2nd February 1935 has been set down for hearing of the application.

H. C. SANYAL, *for* District Judge.

Noakhali, the 20th December 1934. (68—1)

In the Court of the District Judge of Noakhali.

INSOLVENCY CASE No. 10 OF 1934.

NOTICE is hereby given that M. S. Islam, son of late Munshi Maziruddin Ahamed, of village Paschim Ghaniyamora, police-station Parashuram, district Noakhali, has, on the 19th day of November 1934, applied to this Court for being adjudged an insolvent, and the 2nd February 1935 has been set down for hearing of the application.

H. C. SANYAL, *for* District Judge.

Noakhali, the 20th December 1934. (69—1)

In the Court of the District Judge of Pabna and Bogra.

INSOLVENCY CASE No. 4 OF 1934.

NOTICE is hereby given that insolvent Mofizuddin Pramanik, son of late Shokat Pramanik, of Parkhidirpur, police-station Atgharia, district Pabna, has applied for his final discharge and the 1st February 1935 has been set down for hearing of the application.

K. C. CHATTERJI, Sub-Judge, 2nd Court, Pabna-in-charge (offg.).

Pabna, the 17th December 1934. (2854—1)

In the Court of the District Judge of Pabna and Bogra.

INSOLVENCY CASE No. 56 OF 1933.

NOTICE is hereby given that insolvent Faku Sheikh, son of late Farid Sheikh, of Masimpur, police-station and district Pabna, has applied for his final discharge and the 2nd February 1935 has been set down for hearing of the application.

B. K. BASU, District Judge.

Pabna, the 9th January 1935. (112—1)

In the Court of the District Judge of Pabna and Bogra.

INSOLVENCY CASE No. 52 OF 1934.

WHEREAS Jamal Pramanik, son of late Charan Pramanik, of Gangaprosad, police-station Shahazadpur and district Pabna, has applied to this Court by a petition, dated 19th November 1934, to be declared an insolvent, this is to give notice to all his creditors that the Court has fixed the 4th February 1935 for hearing of the aforesaid application and for examination of the debtor.

B. K. BASU, District Judge.

Pabna, the 9th January 1935. (113—1)

In the Court of the District Judge of Pabna and Bogra.

INSOLVENCY CASE No. 55 OF 1934.

WHEREAS Hem Chandra Sarkar, son of late Ishan Chandra Sarkar, of Muradpur, police-station Chouhali and district Pabna, has applied to this Court by a petition, dated 8th December 1934, to be declared an insolvent, this is to give notice to all his creditors that the Court has fixed the 5th February 1935 for hearing of the aforesaid application and for examination of the debtor.

B. K. BASU, District Judge.

Pabna, the 9th January 1935. (114—1)

In the Court of the District Judge of Pabna and Bogra.

INSOLVENCY CASE No. 46 OF 1933.

NOTICE is hereby given that insolvent Ananta Chandra Haldar, son of late Sadhu Charan Haldar, of Tarapasha, police-station Atgharia and district Pabna, has applied for his final discharge and the 1st February 1935 has been set down for hearing of the application.

B. K. BASU, District Judge.

Pabna, the 14th January 1935. (175—1)

In the Court of the District Judge of Pabna and Bogra.

INSOLVENCY CASE No. 62 OF 1933.

NOTICE is hereby given that insolvent Tulshi Charan Haldar, son of late Girish Chandra Haldar, of Tarapasha, police-station Atgharia and district Pabna, has applied for his final discharge and the 1st February 1935 has been set down for hearing of the application.

B. K. BASU, District Judge.

Pabna, the 14th January 1935. (176—1)

ORDER OF ADJUDICATION.

Section 27 of the Provincial Insolvency Act, V of 1920.

In the Court of the District Judge of Pabna and Bogra.

INSOLVENCY CASE No. 48 OF 1934.

NOTICE is hereby given that petitioning debtor Ramani Mohon Sarkar, son of late Krishna Nath Sarkar, of Mokam Kuchiamara, police-station and district Pabna, was adjudged insolvent by an order of this Court, dated the 5th January 1935, and he has been directed to apply for his final discharge within six months.

B. K. BASU, District Judge.

Pabna, the 14th January 1935. (177—1)

In the Court of the District Judge of Tippera.

INSOLVENCY CASE No. 5 OF 1934.

IT is hereby notified that Abdul Aziz, son of late Ajhar Ali, of Dharmandal, police-station Nasirnagar, district Tippera, has been adjudged an insolvent on the 8th day of December 1934 by this Court and has been directed to apply for final discharge within six months from that date.

S. N. GUHA ROY, District Judge.

Comilla, the 11th December 1934. (2790—1)

ORDER OF ADJUDICATION.

Section 27 of the Provincial Insolvency Act, V of 1920.

In the Court of the District Judge at Alipore.

INSOLVENCY APPLICATION No. 31 OF 1934.

PURSUANT to a petition, dated 19th July 1934, filed by Shymapada Banerjee of Station Road, police-station Titagarh, 24-Parganas, debtor, and on the application of the debtor himself and on reading his application and hearing his pleader, it is ordered that the debtor be and the said debtor is hereby adjudged insolvent.

It is further ordered that the debtor do apply for his discharge on 16th December 1935.

Dated this 10th day of December 1934.

T. H. ELLIS, District Judge.

(2875—1)

ORDER OF ADJUDICATION.

Section 27 of the Provincial Insolvency Act, V of 1920.

In the Court of the District Judge at Alipore.

INSOLVENCY APPLICATION No. 34 OF 1934.

PURSUANT to a petition, dated 4th August 1934, filed by Murari Mohan Mukherjee of 15A, Satcowrie Mittra Lane, police-station Manicktola, 24-Parganas, debtor, and on the application of the debtor himself and on reading his application and hearing his pleader, it is ordered that the debtor be and the said debtor is hereby adjudged insolvent.

It is further ordered that the debtor do apply for his discharge on 16th December 1935.

Dated this 10th day of December 1934.

T. H. ELLIS, District Judge.

(2876—1)

In the Court of the District Judge of 24-Parganas.

INSOLVENCY CASE No. 3 OF 1935.

Mujibar Rahaman of 71, Mudiali Road, police-station Metiaburuz, 24-Parganas, applicant.

To Shambhuratan Tewari of Mudiali, police-station Motiaburuz, 24-Parganas, and others, creditors.

ON the 11th day of January 1935 it was ordered that the matter of the petition of the applicant be heard on the 28th day of January 1935 and that the said applicant do attend to be examined by this Court on that date.

T. H. ELLIS, District Judge.

Alipore, the 14th January 1935. (184—1)

ORDER OF ADJUDICATION.

Section 27 of the Provincial Insolvency Act, V of 1920.

In the 4th Court of the Sub-Judge at Alipore.

INSOLVENCY APPLICATION No. 65 OF 1934.

PURSUANT to a petition, dated 15th February 1934 filed by Afsaruddin Mondal of Parui called Damhati, police-station Sarupnagar, district 24-Parganas, and on the application of the debtor himself and on reading his application and hearing his pleader, it is ordered that the debtor be and the said debtor is hereby adjudged insolvent.

It is further ordered that the debtor do apply for his discharge within six months from this date.

Dated this 4th day of December 1934.

J. N. SEN, Sub-Judge.

(2795—1)

ORDER OF ADJUDICATION.

Section 27 of the Provincial Insolvency Act, V of 1920.

In the 4th Court of the Sub-Judge at Alipore.

INSOLVENCY APPLICATION No. 171 OF 1934.

PURSUANT to a petition, dated 23rd April 1934, filed by Jitendra Nath Mukherjee of Kashba, police-station Tollygunge, and on the application of the debtor himself and on reading his application and hearing his pleader, it is ordered that the debtor be and the said debtor is hereby adjudged insolvent.

It is further ordered that the debtor do apply for his discharge within six months from this date.

Dated this 27th day of November 1934.

J. N. SEN, Sub-Judge.

(2796—1)

ORDER OF ADJUDICATION.

Section 27 of the Provincial Insolvency Act, V of 1920

In the 4th Court of the Sub-Judge at Alipore.

INSOLVENCY APPLICATION No. 180 OF 1934.

PURSUANT to a petition, dated 1st May 1934, filed by Shaikh Amulya of Garolia, police-station Noapara, and on the application of the debtor himself and on reading his application and hearing his pleader, it is ordered that the debtor be and the said debtor is hereby adjudged insolvent.

It is further ordered that the debtor do apply for his discharge within six months from this date.

Dated this 30th day of November 1934.

J. N. SEN, Sub-Judge.

(2797—1)

ORDER OF ADJUDICATION.

Section 27 of the Provincial Insolvency Act, V of 1920.

In the 4th Court of the Sub-Judge at Alipore.

INSOLVENCY APPLICATION No. 207 OF 1934.

PURSUANT to a petition, dated 19th May 1934, filed by Saileswar Ganguly of 2C, Shanagar Road, police-station Tollygunge, 24-Parganas, and on the application of the debtor himself and on reading his application and hearing his pleader, it is ordered that the debtor be and the said debtor is hereby adjudged insolvent.

It is further ordered that the debtor do apply for his discharge within six months from this date.

Dated this 4th day of December 1934.

J. N. SEN, Sub-Judge.

(2798—1)

In the 4th Court of the Sub-Judge of 24-Parganas.

INSOLVENCY CASE No. 464 OF 1934.

L. Arnold of 8, Ismail Street, Intally, applicant.

To Bendi Bibi and sons of 28, Giri Babu Lane, Calcutta, and others, creditors.

ON the 3rd day of December 1934 it was ordered that the matter of the petition of the applicant be heard on the 28th day of January 1935, and that the said applicant do attend to be examined by this Court on that date.

J. N. SEN, Sub-Judge.

Alipore, the 5th December 1934. (2806—1)

In the 4th Court of the Sub-Judge of 24-Parganas.

INSOLVENCY CASE No. 466 OF 1934.

Ramprosad of Khardah, police-station Khardah, 24-Parganas, applicant.

To Bhushi Mukherjee of Rora, police-station Khardah 24-Parganas, creditor.

ON the 6th day of December 1934 it was ordered that the matter of the petition of the applicant be heard on the 28th day of January 1935, and that the said applicant do attend to be examined by this Court on that date.

J. N. SEN, Sub-Judge.

Alipore, the 7th December 1934. (2807—1)

In the 4th Court of the Sub-Judge of 24-Parganas.

INSOLVENCY CASE No. 470 OF 1934.

Syed Mahammad of 69-1, Ekbalpore Road, Khidderpore, applicant.

To Sultan Mahammad Khair Mahammad of 14, Durgadas Lane, Khidderpore, and others, creditors.

ON the 5th day of December 1934 it was ordered that the matter of the petition of the applicant be heard on the 28th day of January 1935, and that the said applicant do attend to be examined by this Court on that date.

J. N. SEN, Sub-Judge.

Alipore, the 6th December 1934. (2808—1)

In the 4th Court of the Sub-Judge of 24-Parganas.

INSOLVENCY CASE No. 472 OF 1934.

L. D. Rozario of 1, Mominpore Road, Khiddirpore, applicant.

To B. Sammed of 8, Strand Road, Calcutta, and others, creditors.

ON the 7th day of December 1934 it was ordered that the matter of the petition of the applicant be heard on the 4th day of February 1935, and that the said applicant do attend to be examined by this Court on that date.

J. N. SEN, Sub-Judge.

Alipore, the 8th December 1934. (2809—1)

In the 4th Court of the Sub-Judge of 24-Parganas.

INSOLVENCY CASE No. 483 OF 1934.

Suresh Chandra De of 32, Sambhu Babu Lane, police-station Entally, applicant.

To B. K. Kandoo of 5, South Road, Entally, and others, creditors.

ON the 5th day of December 1934 it was ordered that the matter of the petition of the applicant be heard on the 28th day of January 1935, and that the said applicant do attend to be examined by this Court on that date.

J. N. SEN, Sub-Judge.

Alipore, the 7th December 1934. (2812—1)

In the 4th Court of the Sub-Judge of 24-Parganas.

INSOLVENCY CASE No. 484 OF 1934.

Deonaran Sha and Nanku Sha of Orphangunge Bazar, police-station Watgunge, applicant.

To Narshingdas Agarwalla of 28, Garanhata, Calcutta, and others, creditors.

ON the 6th day of December 1934 it was ordered that the matter of the petition of the applicant be heard on the 28th day of January 1935, and that the said applicant do attend to be examined by this Court on that date.

J. N. SEN, Sub-Judge.

Alipore, the 7th December 1934. (2813—1)

In the 4th Court of the Sub-Judge of 24-Parganas.

INSOLVENCY CASE No. 496 OF 1934.

Bhagaban Das of 10, Beliaghata Road, Entally, applicant.

To Baladeo Das Bouj Nath of 49, Bartola Street, Barabazar, Calcutta, and others, creditors.

ON the 5th day of December 1934 it was ordered that the matter of the petition of the applicant be heard on the 28th day of January 1935, and that the said applicant do attend to be examined by this Court on that date.

J. N. SEN, Sub-Judge.

Alipore, the 7th December 1934. (2820—1)

In the 4th Court of the Sub-Judge of 24-Parganas.

INSOLVENCY CASE No. 498 OF 1934.

J. H. Badger of 30-1, Convent Road, Entally, applicant.

To Mahadu Lal and Sons of 14, Royd Street, Calcutta, and others, creditors.

ON the 6th day of December 1934 it was ordered that the matter of the petition of the applicant be heard on the 28th day of January 1935, and that the said applicant do attend to be examined by this Court on that date.

J. N. SEN, Sub-Judge.

Alipore, the 7th December 1934. (2821—1)

In the 4th Court of the Sub-Judge of 24-Parganas.

INSOLVENCY CASE No. 499 OF 1934.

Girija Kanta Chakravatty of Sealdah Station, applicant.

To Mia Khan Kabuli of 162, Belliaghata Main Road, Calcutta, and others, creditors.

ON the 6th day of December 1934 it was ordered that the matter of the petition of the applicant be heard on the 28th day of January 1935, and that the said applicant do attend to be examined by this Court on that date.

J. N. SEN, Sub-Judge.

Alipore, the 7th December 1934. (2822—1)

In the 4th Court of the Sub-Judge of 24-Parganas.

INSOLVENCY CASE No. 500 OF 1934.

Atal Behari Sen of 2, Monshatolla Lane, Khiddirpore, police-station Ekbalpore, applicant.

To Narshingdas Agarwalla of 23, Garanhata Street, Calcutta, and others, creditors.

ON the 8th day of December 1934 it was ordered that the matter of the petition of the applicant be heard on the 4th day of February 1935, and that the said applicant do attend to be examined by this Court on that date.

J. N. SEN, Sub-Judge.

Alipore, the 8th December 1934. (2823—1)

In the 4th Court of the Sub-Judge of 24-Parganas.

INSOLVENCY CASE No. 502 OF 1934.

Nalini Kumar Chakladar of 5, Kundoo Road, Bhowanipore, Calcutta, applicant.

To A. K. Chatterjee of 112, Amherst Street, Calcutta, and others, creditors.

ON the 8th day of December 1934 it was ordered that the matter of the petition of the applicant be heard on the 28th day of January 1935, and that the said applicant do attend to be examined by this Court on that date.

J. N. SEN, Sub-Judge.

Alipore, the 10th December 1934. (2824—1)

In the 4th Court of the Sub-Judge of 24-Parganas.

INSOLVENCY CASE No. 503 OF 1934.

Saroju Goala of Behala, Barabagan, police-station Behala, applicant.

To Sita Ram Ramnarayan of Diamond Harbour Road Barikbazar, police-station Behala, and others, creditors.

ON the 10th day of December 1934 it was ordered that the matter of the petition of the applicant be heard on the 4th day of February 1935, and that the said applicant do attend to be examined by this Court on that date.

J. N. SEN, Sub-Judge.

Alipore, the 10th December 1934. (2825—1)

NOTICE TO CREDITORS OF APPLICATION FOR DISCHARGE.

Section 41 (*1*) of the Provincial Insolvency Act, V of 1920.

In the 4th Court of the Sub-Judge at Alipore.

INSOLVENCY CASE No. 461 OF 1933.

Shaik Amir of 11-1, Harshi Street, police-station Beliaghata, 24-Parganas, applicant.

TAKE notice that the abovenamed insolvent has applied at the Court for his discharge, and that the Court has fixed the 28th day of January 1935, at 11 o'clock, for hearing the application.

Dated this 7th day of December 1934.

J. N. SEN, Sub-Judge.

(2828—1)

In the 4th Court of the Sub-Judge of 24-Parganas.

INSOLVENCY CASE No. 441 OF 1934.

Keheri Sing of 68, Paharpore Road, police-station Metiaburuz, applicant.

To Mathur Sing of Khidderpore Kalibazar, and others, creditors.

ON the 17th day of December 1934 it was ordered that the matter of the petition of the applicant be heard on the 28th day of January 1935, and that the said applicant do attend to be examined by this Court on that date.

J. N. SEN, Sub-Judge.

Alipore, the 19th December 1934. (5—1)

In the 4th Court of the Sub-Judge of 24-Parganas.

INSOLVENCY CASE No. 505 OF 1934.

Khowaja Fazal Karim of 75/1A, College Street, Calcutta, applicant, creditor.

To Khowaja Shamsuddin of 22, Ashutosh Mukherjee Road, Bhowanipore, debtor.

ON the 11th day of December 1934 it was ordered that the matter of the petition of the applicant be heard on the 28th day of January 1935, and that the said applicant do attend to be examined by this Court on that date.

J. N. SEN, Sub-Judge.

Alipore, the 12th December 1934. (11—1)

In the 4th Court of the Sub-Judge of 24-Parganas.

INSOLVENCY CASE No. 522 OF 1934.

Sasi Bhusan Pramanik of Saktipore, police-station Kakdwip, applicant.

To Kedar Nath Maithy of Nischintapore, 24-Parganas, and others, creditors.

ON the 18th day of December 1934 it was ordered that the matter of the petition of the applicant be heard on the 2nd day of February 1935, and that the said applicant do attend to be examined by this Court on that date.

J. N. SEN, Sub-Judge.

Alipore, the 19th December 1934. (16—1)

ORDER OF ADJUDICATION.

Section 27 of the Provincial Insolvency Act, V of 1920.

In the 4th Court of the Sub-Judge at Alipore.

INSOLVENCY APPLICATION No. 202 OF 1934.

PURSUANT to a petition, dated 17th May 1934, filed by Ershad Akan of Udayrampore, police-station Bishnupore, and on the application of the debtor himself and on reading his application and hearing his pleader, it is ordered that the debtor be and the said debtor is hereby adjudged insolvent.

It is further ordered that the debtor do apply for his discharge within six months from this date.

Dated this 11th day of December 1934.

J. N. SEN, Sub-Judge.

(17—1)

ORDER OF ADJUDICATION.

Section 27 of the Provincial Insolvency Act, V of 1920.

In the 4th Court of the Sub-Judge at Alipore.

INSOLVENCY APPLICATION No. 211 OF 1934.

PURSUANT to a petition, dated 23rd May 1934, filed by Hira Lal Ghose of Behala, police-station Behala, and on the application of the debtor himself and on reading his application and hearing his pleader, it is ordered that the debtor be and the said debtor is hereby adjudged insolvent.

It is further ordered that the debtor do apply for his discharge within six months from this date.

Dated this 18th day of December 1934.

J. N. SEN, Sub-Judge.

(18—1)

ORDER OF ADJUDICATION.

Section 27 of the Provincial Insolvency Act, V of 1920.

In the 4th Court of the Sub-Judge at Alipore.

INSOLVENCY APPLICATION No. 218 OF 1934.

PURSUANT to a petition, dated 26th May 1934, filed by Lachmi Ram of 4, Ashutosh Mukherjee Road, police-station Bhowanipore, and on the application of the debtor himself and on reading his application and hearing his pleader, it is ordered that the debtor be and the said debtor is hereby adjudged insolvent.

It is further ordered that the debtor do apply for his discharge within six months from this date.

Dated this 18th day of December 1934.

J. N. SEN, Sub-Judge.

(19—1)

ORDER OF ADJUDICATION.

Section 27 of the Provincial Insolvency Act, V of 1920.

In the 4th Court of the Sub-Judge at Alipore.

INSOLVENCY APPLICATION No. 245 OF 1934.

PURSUANT to a petition, dated 14th June 1934, filed by Benarashi Missir of Narkelbagan, 95-1, Cossipore Road, police-station Cossipore, and on the application of the debtor himself and on reading his application and hearing his pleader, it is ordered that the debtor be and the said debtor is hereby adjudged insolvent.

It is further ordered that the debtor do apply for his discharge within six months from this date.

Dated this 11th day of December 1934.

J. N. SEN, Sub-Judge.

(20—1)

ORDER OF ADJUDICATION.

Section 27 of the Provincial Insolvency Act, V of 1920.

In the 4th Court of the Sub-Judge at Alipore.

INSOLVENCY APPLICATION No. 267 OF 1934.

PURSUANT to a petition, dated 23rd June 1934, filed by Satish Chandra Mondal of Nadadanga, police-station Bishnupore, and on the application of the debtor himself and on reading his application and hearing his pleader, it is ordered that the debtor be and the said debtor is hereby adjudged insolvent.

It is further ordered that the debtor do apply for his discharge within six months from this date.

Dated this 11th day of December 1934.

J. N. SEN, Sub-Judge.

(21—1)

ORDER OF ADJUDICATION.

Section 27 of the Provincial Insolvency Act, V of 1920.

In the 4th Court of the Sub-Judge at Alipore.

INSOLVENCY APPLICATION NO. 315 OF 1934.

PURSUANT to a petition, dated 25th July 1934, filed by Karoo Shaw of 57-5, Raja Dinendra Street, police-station Beliaghata, and on the application of the debtor himself and on reading his application and hearing his pleader, it is ordered that the debtor be and the said debtor is hereby adjudged insolvent.

It is further ordered that the debtor do apply for his discharge within six months from this date.

Dated this 18th day of December 1934.

J. N. SEN, Sub-Judge.

(22—1)

ORDER OF ADJUDICATION.

Section 27 of the Provincial Insolvency Act, V of 1920.

In the 4th Court of the Sub-Judge at Alipore.

INSOLVENCY APPLICATION NO. 318 OF 1934.

PURSUANT to a petition, dated 26th July 1934, filed by Abdul Hakim of 42, Koreya Road, police-station Ballygunge, and on the application of the debtor himself and on reading his application and hearing his pleader, it is ordered that the debtor be and the said debtor is hereby adjudged insolvent.

It is further ordered that the debtor do apply for his discharge within six months from this date.

Dated this 18th day of December 1934.

J. N. SEN, Sub-Judge.

(23—1)

ORDER OF ADJUDICATION.

Section 27 of the Provincial Insolvency Act, V of 1920.

In the 4th Court of the Sub-Judge at Alipore.

INSOLVENCY APPLICATION NO. 320 OF 1934.

PURSUANT to a petition, dated 26th July 1934, filed by Ramdas Mondal of Mohonpur, police-station Diamond Harbour, and on the application of the debtor himself and on reading his application and hearing his pleader, it is ordered that the debtor be and the said debtor is hereby adjudged insolvent.

It is further ordered that the debtor do apply for his discharge within six months from this date.

Dated this 11th day of December 1934.

J. N. SEN, Sub-Judge.

(24—1)

ORDER OF ADJUDICATION.

Section 27 of the Provincial Insolvency Act, V of 1920.

In the 4th Court of the Sub-Judge at Alipore.

INSOLVENCY APPLICATION NO. 330 OF 1934.

PURSUANT to a petition, dated 4th August 1934, filed by Sadhu Charan Das of Gobinda Banerjee Lane, police-station Tollygunge, and on the application of the debtor himself and on reading his application and hearing his pleader, it is ordered that the debtor be and the said debtor is hereby adjudged insolvent.

It is further ordered that the debtor do apply for his discharge within six months from this date.

Dated this 18th day of December 1934.

J. N. SEN, Sub-Judge.

(25—1)

ORDER OF ADJUDICATION.

Section 27 of the Provincial Insolvency Act, V of 1920.

In the 4th Court of the Sub-Judge at Alipore.

INSOLVENCY APPLICATION NO. 334 OF 1933.

PURSUANT to a petition, dated 6th August 1934, filed by Mrs. M. E. Stracey of 211, Park Circus, 24-Parganas, and on the application of the debtor herself and on reading her application and hearing her pleader, it is ordered that the debtor be and the said debtor is hereby adjudged insolvent.

It is further ordered that the debtor do apply for her discharge within six months from this date.

Dated this 11th day of December 1934.

J. N. SEN, Sub-Judge.

(26—1)

ORDER OF ADJUDICATION.

Section 27 of the Provincial Insolvency Act, V of 1920.

In the 4th Court of the Sub-Judge at Alipore.

INSOLVENCY APPLICATION NO. 335 OF 1934.

PURSUANT to a petition, dated 6th August 1934, filed by Subal Chandra De of 55-2, Telanga Bagan Lane, Ultadanga, police-station Manicktola, and on the application of the debtor himself and on reading his application and hearing his pleader, it is ordered that the debtor be and the said debtor is hereby adjudged insolvent.

It is further ordered that the debtor do apply for his discharge within six months from this date.

Dated this 18th day of December 1934.

J. N. SEN, Sub-Judge.

(27—1)

ORDER OF ADJUDICATION.

Section 27 of the Provincial Insolvency Act, V of 1920.

In the 4th Court of the Sub-Judge at Alipore.

INSOLVENCY APPLICATION NO. 338 OF 1934.

PURSUANT to a petition, dated 8th August 1934, filed by Haridas Sahay of 42A, Roup Narayan Nandan Lane, police-station Bhowanipore, and on the application of the debtor himself and on reading his application and hearing his pleader, it is ordered that the debtor be and the said debtor is hereby adjudged insolvent.

It is further ordered that the debtor do apply for his discharge within six months from this date.

Dated this 11th day of December 1934.

J. N. SEN, Sub-Judge.

(28—1)

ORDER OF ADJUDICATION.

Section 27 of the Provincial Insolvency Act, V of 1920.

In the 4th Court of the Sub-Judge at Alipore.

INSOLVENCY APPLICATION NO. 349 OF 1934.

PURSUANT to a petition, dated 14th August 1934, filed by Kissori Mohon Baidya of Mahamaya, police-station Mathurapore, and on the application of the debtor himself and on reading his application and hearing his pleader, it is ordered that the debtor be and the said debtor is hereby adjudged insolvent.

It is further ordered that the debtor do apply for his discharge within six months from this date.

Dated this 11th day of December 1934.

J. N. SEN, Sub-Judge.

(29—1)

ORDER OF ADJUDICATION.

Section 27 of the Provincial Insolvency Act, V of 1920.

In the 4th Court of the Sub-Judge at Alipore.

INSOLVENCY APPLICATION NO. 353 OF 1934.

PURSUANT to a petition, dated 17th August 1934, filed by Ghoora Mia *alias* Abdul Aziz of Nadial, police-station Matiaburz, and on the application of the debtor himself and on reading his application and hearing his pleader, it is ordered that the debtor be and the said debtor is hereby adjudged insolvent.

It is further ordered that the debtor do apply for his discharge within six months from this date.

Dated this 18th day of December 1934.

J. N. SEN, Sub-Judge.

(30—1)

ORDER OF ADJUDICATION.

Section 27 of the Provincial Insolvency Act, V of 1920.

In the 4th Court of the Sub-Judge at Alipore.

INSOLVENCY APPLICATION NO. 360 OF 1934.

PURSUANT to a petition, dated 21st August 1934, filed by Sugan Chand of Shahpore, Kailash Pandit Lane, police-station Behala, and on the application of the debtor himself and on reading his application and hearing his pleader, it is ordered that the debtor be and the said debtor is hereby adjudged insolvent.

It is further ordered that the debtor do apply for his discharge within six months from this date.

Dated this 18th day of December 1934.

J. N. SEN, Sub-Judge.

(31—1)

ORDER OF ADJUDICATION.

Section 27 of the Provincial Insolvency Act, V of 1920.

In the 4th Court of the Sub-Judge at Alipore.

INSOLVENCY APPLICATION NO. 362 OF 1934.

PURSUANT to a petition, dated 23rd August 1934, filed by Surendra Nath Ray of Bijpore, police-station Bijpore, and on the application of the debtor himself and on reading his application and hearing his pleader, it is ordered that the debtor be and the said debtor is hereby adjudged insolvent.

It is further ordered that the debtor do apply for his discharge within six months from this date.

Dated this 18th day of December 1934.

J. N. SEN, Sub-Judge.

(32—1)

NOTICE TO CREDITORS OF APPLICATION FOR DISCHARGE.

Section 41 (*1*) of the Provincial Insolvency Act, V of 1920.

In the 4th Court of the Sub-Judge at Alipore.

INSOLVENCY CASE NO. 59 OF 1934.

Jan Muhammad of Sadarbazar, police-station Barrackpore, applicant.

TAKE notice that the abovenamed insolvent has applied at the Court for his discharge, and that the Court has fixed the 4th day of February 1935 at 11 o'clock for hearing the application.

Dated this 12th day of December 1934.

J. N. SEN, Sub-Judge.

(34—1)

NOTICE TO CREDITORS OF APPLICATION FOR DISCHARGE.

Section 41 (*1*) of the Provincial Insolvency Act, V of 1920.

In the 4th Court of the Sub-Judge at Alipore.

INSOLVENCY CASE NO. 71 OF 1934.

Dhirendra Nath Banerjee of 8-2, Hazra Road, police-station Bhowanipore, 24-Parganas, applicant.

TAKE notice that the abovenamed insolvent has applied at the Court for his discharge, and that the Court has fixed the 28th day of January 1935 at 11 o'clock for hearing the application.

Dated this 14th day of December 1934.

J. N. SEN, Sub-Judge.

(35—1)

Imperial Bank of India.

THE following appointments on the Bank's staff are hereby notified :—

Messrs. M. K. Bhattacharyya and M. N. Banerjea, Second Grade Assistants, Calcutta Local Head Office, to act as Accountants at that office as from 23rd November and 16th December 1934, respectively.

By order,

B. A. C. NEVILLE,
Secretary and Treasurer.

Calcutta, the 18th January 1935. (209—1)

WANTED a Clerk in the scale of Rs. 35—35—40—2/2—60 for the office of the District Inspector of Schools, Pabna.

None need apply who has not passed the I.A. or I.Sc. Examination. Preference will be given to those who know typewriting and have some office experience.

Applications stating name in full, father's name, home address, village, thana, post office and district and age should reach the undersigned before 31st January 1935.

K. AHMED,
Inspector of Schools, Rajshahi Division.

Jalpaiguri, the 12th January 1935.

WANTED a Head Maulvi in the scale of Rs. 60—7/2—95—5/2—140 for a Government High School in the Rajshahi Division.

The applicant must be a Senior Madrasah passed man with sufficient knowledge of English and must be very strong in Urdu.

Applications stating qualifications in detail, name in full, father's name, home address, village, post office, thana, district and age with date of birth should reach the undersigned on or before the 15th February 1935.

K. AHMED,
Inspector of Schools, Rajshahi Division.

Jalpaiguri, the 12th January 1935.

WANTED a Head Clerk for the Rangpur Magistracy in the grade of Rs. 155—5/2—165—10/2—175.

The candidate must have sufficient experience of the work of a District Office.

Applications with copies of testimonials stating age and giving particulars of the past services and educational qualifications should reach the undersigned on or before the 30th January 1935.

Canvassing in any form would be considered a complete disqualification.

N. M. AYYAR, Magistrate-Collector.

Rangpur Collectorate, the 15th January 1935.

WANTED an experienced Overseer for the District Board of Rangpur on the scale of pay of Rs. 100—3—130—4—150 *plus* consolidated travelling allowance of Rs. 35 per mensem subject to emergency cut, if any. None need apply who does not possess qualifications prescribed by Bengal Government notifications No. 497T.—L.S.-G., dated the 23rd October 1932, and No. 1934L. S.-G., dated the 30th June 1926. The appointment will be on probation for one year. Applicants should state in their applications their age, qualifications, past services, native district and place of residence. Applications with copies of certificates and testimonials should reach the undersigned on or before the 1st February 1935. The selected candidate will have to join by the 1st of April 1935.

S. C. CHATTERJEE (Rai Bahadur), Chairman,
District Board.

Rangpur, the 14th January 1935. (174 -1)

Road Cess Notification.

THE District Board of Darjeeling at its special meeting held on the 15th December 1934 resolved to levy road cess in the district for the year 1935-36 at the maximum rate of six pies or two pice in the rupee on the annual value of lands, etc., as before.

A. McD. CLARK, Chairman.

Darjeeling, the 11th January 1935. (210—1)

THE Bengal and Madras Service Family Pension Fund which is provisionally managed and assisted by Government has for its object the provision of monthly pensions for the maintenance of the widows and children of subscribers and is open, with certain exceptions, to all active and pensioned members of the Uncovenanted service of Government (except those serving under the Government of Bombay), and to Local Fund servants earning pensions from Government. Some of the special features of the fund are (1) that widowed daughters incapable of re-marriage or children labouring under such mental or bodily infirmities as incapacitate them from earning their livelihood or preclude the possibility of marriage (in case of a daughter) are admitted to its benefits; and (2) that subscribers to the Widows and Daughters' branches are entitled to a refund of 30 per cent. of the premia paid, should the nominee predecease them after five years of admission. The second quinquennial valuation of the Fund has been completed by the Actuary to the Government of India, and his report discloses very favourable results. For forms of application and rules of the Fund apply to the Accountant-General, Bengal, Imperial Secretariat Buildings, Calcutta.

NOTICE is hereby given that the partnership, carried on between the undersigned at No. 161-1, Harrison Road, Bangur Building, Calcutta, under the names and styles of Hazarimal Bhimraj and E. S. Stowart and Co., have been, by mutual consent, dissolved on and from the 14th day of January 1935.

Dated Calcutta, this 14th day of January 1935.

HAZARIMALL AGARWALLA.
BHIMRAJ SUREKA.

Bangur Building, 161-1, Harrison Road, Calcutta.

(168—1)

NOTICE is hereby given that all exhibits filed in cases disposed of in this Court during the year 1932 will be destroyed if not taken back before 31st March 1935 by the parties who filed them.

N. N. GUPTA, Municipal Magistrate, Calcutta.

Town Hall, Calcutta, the 9th January 1935.

NOTICE is hereby given that all exhibits filed in cases disposed of in this Court during the year 1932 will be destroyed if not taken back before 31st March 1935 by the parties who filed them.

A. MAJID, Municipal Magistrate, Calcutta.

Town Hall, Calcutta, the 9th January 1935.

Lost, Stolen or Destroyed.

THE Government Promissory Note No. 075328 of the 3½ per cent. loan of 1854-55 for Rs. 500, originally standing in the name of Prosad Das Boral and Brothers, and last endorsed to Tulsi Das Dey (since deceased), the proprietor, by whom it was never endorsed to any other person, having been lost, stolen or destroyed, notice is hereby given that payment of the above note and the interest thereupon have been stopped at the Public Debt Office, Imperial Bank of India, Calcutta, and that application is about to be made for the issue of duplicate in favour of Lalit Mohan Dey. The public are cautioned against purchasing or otherwise dealing with the abovementioned security.

Signature of the advertiser—Lalit Mohan Dey.

Residence—13, Kailash Bose Street, Calcutta.

(109—3)

In the matter of the Indian Companies Act, 1913, and

In the matter of the Swastika Insurance Society (in liquidation).

PURSUANT to section 217 of the Indian Companies Act, 1913, notice is hereby given that a general meeting of the above Society will be held at 8, Old Court House Corner, Calcutta, on the 26th day of January 1935, at 2 p.m., for the purpose of laying before it an account of the winding up, showing how the winding up has been conducted and the property of the Company has been disposed of and giving any explanation thereof.

G. C. RAY, Liquidator.

8, Old Court House Corner, Calcutta, 9th January 1935.

(116—1)

In the matter of the Indian Companies Act, VII of 1913, and

In the matter of the Great Bengal Insurance, Ltd. (in liquidation).

NOTICE is hereby given that in an extraordinary general meeting of the shareholders of the above-named Company, held on the 11th January 1935, and it has been resolved that it has been proved to the entire satisfaction of the meeting that the Company cannot by reason of its liabilities continue its business and that it is advisable to wind up, and the Company be and is hereby wound up voluntarily and that Mr. Harendra Chandra Rakshit of 58, Clive Street, Calcutta, be and is hereby appointed liquidator for the purpose of such winding up.

GOPAL CHANDRA SAHA, Chairman.

98-5, Clive Street, Calcutta, the 11th January 1935.

(161—1)

In the matter of the Indian Companies Act, VII of 1913, and

In the matter of the Jajodia Cotton Mills Co., Ltd. (In voluntary liquidation).

NOTICE is hereby given, pursuant to section 217 of the Indian Companies Act (VII of 1913) that a general meeting of the shareholders of the abovenamed Company will be held on Saturday, the 23rd day of February 1935, at 2 p.m., at No. 6, Old Post Office Street, Calcutta, in order that there may be laid before the said meeting an account showing the manner in which the winding up has been conducted and the property of the Company disposed of and to pass an extraordinary resolution as to the disposal of the books, accounts and documents of the Company and in order that the said meeting may hear any explanation that may be given by the liquidator.

B. D. JHUNJHUNWALA, Liquidator.

6, Old Post Office Street, Calcutta, the 11th day of January 1935. (117—1)

In the matter of the Indian Companies Act, VII of 1913, and

In the matter of Visva-Bharat Insurance Co., Ltd. (In voluntary liquidation).

NOTICE is hereby given that at an extraordinary general meeting of the members of the abovenamed Company duly convened and held at 3-1, Mangoe Lane, Calcutta, on the 14th day of January 1935, the following extraordinary resolution was duly passed :—

"Resolved that it has been proved to the satisfaction of this meeting, that the Company cannot, by reason of its liabilities, continue its business, and that it is advisable to wind up the same and accordingly that the Company be wound up voluntarily, and that Mr. S. K. Kar of 4, Hastings Street, Calcutta, be and he is hereby appointed liquidator for the purpose of such winding up."

S. K. KAR, Liquidator.

4, Hastings Street, Calcutta, 14th January 1935. (207—1)

In the matter of the Indian Companies Act, VII of 1913, and

In the matter of Visva-Bharat Insurance Co., Ltd. (In voluntary liquidation).

NOTICE is hereby given, pursuant to section 209(*1*) of the Indian Companies Act, 1913, that a meeting of the creditors of the abovenamed Company will be held on Wednesday, the 6th of February 1935, at 2 p.m., at 4, Hastings Street, Calcutta.

The creditors must lodge their claims supported by documents with the undersigned on or before Tuesday, the 5th February 1935.

S. K. KAR, Liquidator.

4, Hastings Street, Calcutta, 14th January 1935. (208—1)

In the matter of the Indian Companies Act, VII of 1913,

and

In the matter of the Mass Insurance Bank, Limited (In voluntary liquidation).

NOTICE is hereby given, pursuant to section 209 of the Indian Companies Act, VII of 1913, that a meeting of the creditors of the Mass Insurance Bank, Limited (in voluntary liquidation), will be held at Lindlie Chambers, 6, Hastings Street, Calcutta, on the 1st February 1935, at 2 o'clock in the afternoon, for the purposes provided in the same section.

K. J. PUROHIT, Incorporated Accountant, Registered Accountant, Liquidator.

Calcutta, the 15th January 1935. (169—1)

In the matter of the Indian Companies Act, VII of 1913, and

In the matter of the Mass Insurance Bank, Limited (In voluntary liquidation).

THE creditors of the above-named Company are required, on or before the 1st February 1935, to send their names and addresses and the particulars of their debts and claims, and the names and addresses of their Solicitors (if any) to Mr. K. J. Purohit, Incorporated Accountant, Registered Accountant of Lindlie Chambers, 6, Hastings Street, Calcutta, the liquidator of the said Company, and if so required by notice in writing from the said liquidator, are by their Solicitors or personally to come and prove their said debts or claims at such time and place as shall be specified in such notice, or in default thereof they will be excluded from the benefit of any distribution made before such debts are proved.

K. J. PUROHIT, Incorporated Accountant, Registered Accountant, Liquidator.

Calcutta, the 15th January 1935. (170—1)

In the matter of the Indian Companies Act, VII of 1913, and

In the matter of the Mass Insurance Bank, Limited.

AT an extraordinary general meeting of the members of the abovenamed Company, duly convened and held at No. 96D, Diamond Harbour Road, Kidderpore, Calcutta, on the 29th December 1934, the following extraordinary resolutions were duly passed and at a second extraordinary general meeting, duly convened and held at the same place on the 8th January 1935, the same were duly confirmed as special resolutions :—

(1) "Resolved that it has been proved to the satisfaction of this meeting that the Company cannot, by reasons of its liabilities, continue its business, and that it is advisable to wind up the same, and accordingly that the Company be wound up voluntarily."

(2) "That Mr. K. J. Purohit, F.S.A.A., R.A., of 6, Hastings Street, Calcutta, Auditor, be and is hereby appointed liquidator for winding up the Company voluntarily."

Dated this 9th day of January 1935.

B. B. DAS, Chairman.

(171—1)

In the matter of the Indian Companies Act, 1913, and

In the matter of the Jalpaiguri Islamia Trading Company, Limited (In voluntary liquidation).

NOTICE is hereby given under section 217 of the Indian Companies Act, 1913, to all shareholders and creditors of the abovenamed Company that a general meeting of the Company will be held on Monday, the 25th February 1935, at 8-30 a.m., at the house of Maulvi Muhammed Ismail, B.L., Pleader, at Jalpaiguri, for acceptance of the account made by the liquidator under section 217(*1*) of the Indian Companies Act, 1913, and for receiving any explanation thereon and for dissolution and final winding up of the aforesaid Company.

CHARU CHANDRA SEN, Liquidator.

Jalpaiguri, the 15th January 1935. (173—1)

In the matter of the Indian Companies Act, 1913, and

In the matter of the Howrah Oil Mills Co., Ltd. (In voluntary liquidation).

NOTICE is hereby given that at extraordinary general meetings of the members of the abovenamed Company duly convened and held at No. 8, Clive Row, Calcutta, on the 2nd and 17th day of January 1935, respectively, the resolutions below mentioned were passed and confirmed as special resolutions :—

(1) That it is desirable to wind up the Company and that accordingly the Company be wound up voluntarily.

(2) That Charles Alexander Carmichael and Allan Smith of 8, Clive Row, Calcutta, Merchants, be and they are hereby appointed liquidators of the Company with joint and several powers for the purposes of such winding up.

C. A. CARMICHAEL,
ALLAN SMITH,
Liquidators.

8, Clive Row, Calcutta, the 17th January 1935. (199—1)

In the matter of the Indian Companies Act, 1913, and

In the matter of the Howrah Oil Mills Co., Ltd. (in voluntary liquidation).

NOTICE is hereby given, pursuant to section 209(*1*) of the Indian Companies Act, 1913, that a meeting of the creditors of the abovenamed Company will be held on Tuesday, the 12th day of February 1935, at 11 a.m., at No. 8, Clive Row, Calcutta.

C. A. CARMICHAEL,
ALLAN SMITH,
Liquidators.

8, Clive Row, Calcutta, the 17th January 1935.

(200—1)

In the matter of the Indian Companies Act, 1913, and

In the matter of One Rupee, Ltd. (In liquidation).

[Pursuant to section 209 (*1*).]

NOTICE is hereby given that a meeting of the creditors of One Rupee, Ltd., will be held on the 10th day of February 1935 at the liquidator's office at Amlapara, Narayanganj, at 3 p.m.

N. N. GUHA, Joint Liquidator.

Narayanganj, Dacca, the 13th January 1935. (164—1)

In the matter of the Indian Companies Act, 1913, and

In the matter of One Rupee, Ltd.

AT an extraordinary general meeting of the members of the above-named Company, duly convened and held at the registered office at Narayanganj on the 8th day of January 1935, the following extraordinary resolution was duly passed :—

That it has been proved to the entire satisfaction of this meeting that the Company cannot by reason of its liabilities continue business, and it is advisable to wind up the same and accordingly the Compnay be wound up, and at the same meeting Mr. Nripendra Chandra Datta, Pleader, of Amlapara, Narayanganj, and Dr. Nagendra Nath Guha of 28, Kotowali Road, Dacca, were appointed liquidators for the purposes of such winding up.

N. N. GUHA, Chairman.

Narayanganj, Dacca, the 12th January 1935. (165—1)

In the matter of the Indian Companies Act, VII of 1913, and

In the matter of Kasbeswari Insurance Company (in liquidation).

NOTICE is hereby given that in an extraordinary general meeting of the Company, held on the 3rd January 1935, it has been resolved that it has been proved to the entire satisfaction of the meeting that the Company cannot, by reason of its liabilities, continue its business and that it is advisable to wind up, and the Company be and is hereby wound up voluntarily and that Mr. Jagat Hari Roy of Kamalasagar, Tippera, be and is hereby appointed liquidator for the purpose of such winding up.

BENODE BEHARI ROY, Chairman.

Calcutta, the 16th January 1935. (192—1)

In the matter of the Indian Companies Act and

In the matter of the Naba Bharat Mutual Insurance Co., Ltd. (in liquidation).

THE Naba Bharat Mutual Insurance Co., Ltd., Munshiganj (Dacca), was put in voluntary liquidation in an extraordinary general meeting of the shareholders of the said Ltd. Company, held on the 21st December 1934, and I have been appointed voluntary liquidator of the said Ltd. Company in that meeting.

Under section 209 of the Indian Companies Act, I as liquidator of the said Naba Bharat Mutual Insurance Co., Ltd., Munshiganj, do hereby inform all the creditors of the Company to be present in a meeting of the creditors to be held on the 26th January 1935 at 3 p.m. in the liquidator's office at Munshiganj (Dacca).

JATINDRA MOHAN DAS, B.L., Liquidator.

Munshiganj (Dacca), the 7th January 1935. (108—1)

Imperial Library.

(Secretariat Buildings, 6, Esplanade East, Calcutta.)
Open on—

Week days and Saturdays from 10 a.m. to 7 p.m
Sundays and Gazetted holidays from 2 p.m. to 5 p.m.

THE Imperial Library is also a Lending Library. It is free to all except children. There is no subscription to pay

K. M. ASADULLAH, Librarian.

Descriptive Catalogue of Sanskrit Manuscripts.

PARTS I, II and III of a Descriptive Catalogue of the Sanskrit Manuscripts in the Library of the Calcutta Sanskrit College, prepared by Pandit Hrishikesh Sastri and Babu Siva Chandra Gui, M.A., B.L., of that College, are offered to the public for sale. The Catalogue having to be completed in 23 parts the price of each part is 12 annas a copy exclusive of postage. Copies can be obtained from the Principal of the Sanskrit College, Calcutta.

CINCHONA FACTORY PRODUCTS.

By order of the Government of Bengal Cinchona Factory Products as manufactured and packed at the Cinchona Factory, Mungpoo, Darjeeling district, will be sold and distributed by the Superintendent of the **Presidency Jail,** *in original packages* as received from the Mungpoo Factory, at the rates herein noted **from the 1st May 1926 :—**

Quinine Sulphate.

For 60 lbs. and upwards at a time .. Rs. 18 per lb.
For 6 lbs. and over but less than 60 lbs. at a time .. .. .. „ 19 „
For any quantity less than 6 lbs. .. „ 20 „

Quinine Bisulphate.

Irrespective of quantity .. Rs. 20 per lb.

Quinine Hydrobromide.

Irrespective of quantity .. Rs. 25 per lb.

Quinine Salicylate.

Irrespective of quantity .. Rs. 26 per lb.

Quinine Bihydrobromide.

Irrespective of quantity .. Rs. 28 per lb.

Totaquina.

Irrespective of quantity .. Rs. 13 8 per lb.

Quinine Hydrochloride.

For 60 lbs. and upwards at a time .. Rs. 23 per lb.
For 6 lbs. and over but less than 60 lbs. at a time .. .. .. „ 24 „
For any quantity less than 6 lbs. .. „ 25 „

Quinine Di-Hydrochloride.

For 60 lbs. and upwards at a time .. Rs. 25 per lb.
For 6 lbs. and over but less than 60 lbs. at a time .. .. .. „ 26 „
For any quantity less than 6 lbs. .. „ 27 „

Quinidine Sulphate.

For 60 lbs. and upwards at a time .. Rs. 20 per lb.
For 6 lbs. and over but less than 60 lbs. at a time .. .. .. „ 21 „
For any quantity less than 6 lbs. .. „ 22 „

Cinchonidine Sulphate.

For 60 lbs. and upwards at a time .. Rs. 25 per lb.
For 6 lbs. and over but less than 60 lbs. at a time .. .. .. „ 26 „
For any quantity less than 6 lbs. .. „ 27 „

Cinchonine Sulphate.

For 60 lbs. and upwards at a time .. Rs. 12 per lb.
For 6 lbs. and over but less than 60 lbs. at a time .. .. .. „ 13 „
For any quantity less than 6 lbs. .. „ 14 „

Cinchona Febrifuge (Powder).

For 60 lbs. and upwards at a time .. Rs. 9 per lb.
For 6 lbs. and over but less than 60 lbs. at a time .. .. .. „ 9 „
For any quantity less than 6 lbs. .. „ 10 „

Cinchona Febrifuge (Tablets).

For 60 lbs. and upwards at a time .. Rs. 10 per lb.
For 6 lbs. and over but less than 60 lbs. at a time .. .. .. „ 10 „
For any quantity less than 6 lbs. .. „ 11 „

Quinoidine (Tablets).

For 60 lbs. and upwards at a time .. Rs. 5 per lb.
For 6 lbs. and over but less than 60 lbs. at a time .. .. .. „ 5 „
or any quantity less than 6 lbs. .. „ 6 „

Quinoidine (in Mass).

For 60 lbs. and upwards at a time .. Rs. 4 per lb.
For 6 lbs. and over but less than 60 lbs. at a time .. .. .. „ 4 „
For any quantity less than 6 lbs. .. „ 5 „

Cinchona Bark (in 50 pound original bags).

Per bag .. .. .. Rs. 25.

per box of 200 tablets each.

Quinine Tablets—Rs. 2-8 (Bengal), Rs. 3 (outside Bengal)

Rs. 15-8-0 per lb.

Transit charges extra in every case.

Quinine Sulphate is for sale to Government Institutions and Missionaries only. It is not for sale to Private Firms or the General Public.

Cinchona Febrifuge in Powder and Tablet form (when in stock) is for sale to Government Institutions, Missionaries and the General Public.

Quinine Sulphate will be supplied to Hospitals and Dispensaries of this Presidency only at the wholesale rate of Rs. 13 per lb., irrespective of quantities. For all other purchasers the rates given above will apply.

Five and ten boxes of Quinine Tablets are sold to the public at the concession rates which will be intimated on application.

Provinces other than Bengal, Bihar and Orissa and Assam will get their supplies of Sulph. Quinine from the Director, Botanical Survey of India, Sibpur, Howrah.

Local sale at the jail gate from 10 to 12 noon.

The system of payment is by—*Cash in advance*—by "*Treasury Challans*," which should accompany the order or indent.

In cases where this is not possible, payment should be made by "*Remittance Transfer Receipts*" or crossed "*Cheques.*"

Indents unaccompanied by cash in advance will be sent Value Payable Post. Credit sale is not allowed except under special circumstances.

In the case of *Government officers* payments will be recovered by *Book Transfer, i.e., Countersigned Invoices,* in the event of *Cash* not accompanying the indent by "*Treasury Challans,*" *Remittance Transfer Receipt or Cheque.*

2. Price and postage must accompany the price of the drug (when the drug is required by post).

The name of the Railway and Steamer Station or Post Office must be written distinctly when the parcels are required by Rail, Steamer or by Post. Railway parcels are sent by passenger train only.

A scale of postage is given below.

	1 oz.	2 ozs.	4 ozs.	½ lb.	¾ lb.	1 lb.
	As.	As.	As.	As.	As.	Rs. A.
Quinine Sulph. ..	..	..	7	7	11	0 11
Cinchona Feb. ..	..	..	7	7	11	0 11
Cinchona Feb. Tablets	..	..	7	7	11	0 11
Quinoidine Tablets ..	..	..	..	..	..	1 13
Quinine Hydrochlor. ..	5	5	7	7	..	0 11
Quinine Di-hydrochlor.	5	5	7	7	..	0 11
Quinine Tablets ..	..	..	7	7	11	0 11

	1½ lb.	2 lb.	3 lb.	4 lb.	5 lb.	6 lb.
	Rs. A.	Rs. A.	Rs. A.	Rs. A.	Rs. A.	Rs. A.
Quinine Sulph. ..	0 15	1 3	1 7	1 15	2 7	2 15
Cinchona Feb. ..	0 15	0 15	1 7	1 11	1 15	2 7
Cinchona Feb. Tablets	1 3	1 3	1 11	1 15	2 7	2 15
Quinoidine Tablets ..	..	2 3	3 3	..	..	..
Quinine Hydrochlor. ..	1 1	0 15	1 7	1 11	..	..
Quinine Di-hydrochlor.	1 1	0 15	1 13	2 5	..	..
Quinine Tablets ..	0 15	0 14	1 7	1 11	1 15	2 3

Two different drugs are not packed in the same parcel and postage must be paid separately for each kind.

N.B.—Postage stamps are not accepted as revenue.

Government reserve the right to alter the price without notice.

Registered No. C207

The Calcutta Gazette

THURSDAY, JANUARY 24, 1935.

PART IV

Bills introduced in the Bengal Legislative Council, Reports of Select Committees presented or to be presented to that Council, and Bills published before introduction in that Council.

BENGAL LEGISLATIVE COUNCIL DEPARTMENT.

NOTIFICATION.

No. 410L.C.—21st January, 1935.—The following report of the Select Committee on the Estates Partition (Amendment) Bill, 1933, with the Bill as amended by the Committee, is hereby published for general information.

Report of the Select Committee on the Estates Partition (Amendment) Bill, 1933.

We, the members of the Select Committee of the Bengal Legislative Council to which the Estates Partition (Amendment) Bill, 1933, was referred by a motion carried in the Bengal Legislative Council on the 14th December, 1934, have the honour to submit this our report with the Bill, annexed.

All matter recommended to be omitted by the Select Committee has been printed in italics and enclosed in square brackets and all new matter recommended to be inserted has been underlined.

2. The Bill was published in the *Calcutta Gazette* of the 31st August, 1933.

3. We do not consider that the Bill requires republication.

4. The Committee met on the 18th December, 1934, and concluded its sitting on that day.

5. The changes recommended in the Bill are as follow :—

Long Title and Preamble.—We have omitted the word "further" in the Long Title and Preamble as being incorrect.

We have corrected a clerical error by the substitution of the word "appearing" for "reappearing."

Clause 1.—We have recommended the substitution of the figures "1935" for the figures "1933" as the Bill will probably be passed in the year 1935.

Clause 2.—We have recommended the omission of this clause as being unnecessary.

Clause 3.—The main object of the Bill is to allow rent-free lands to be partitioned, without the consent of all the proprietors. But the effect of the amendment to section 82 of the Estates Partition Act as proposed in the Bill as introduced would be to make partition of all rent-free lands compulsory. We consider that in actual practice it would not be found convenient to the proprietors or the tenants to partition such lands in every case and that the Collector should be given discretion to deal with such lands according to the main principles (*mutatis mutandis*) laid down in the Act for the partition of rent-paying lands. The best method of giving such discretion to the Collector, in our opinion, is to repeal the whole of section 82 of the Act, and we have accordingly recommended the substitution of a new clause to this effect in place of clause 3 of the Bill as introduced.

We recommend that the Bill, as reported on by us, be passed.

B. L. MITTER,
Chairman.

S. C. RAY CHOWDHURY.
SHANTI SHEKHARESWAR RAY.
MUSHARRUF HOSAIN.
R. MAITI.
KISHORI MOHAN CHAUDHURI.
EMADUDDIN AHMED.
B. N. SINHA.
HEM CHANDRA ROY CHOUDHURI.
SARAT KUMAR ROY.
O. M. MARTIN.
HASSAN ALI.
A. DEC. WILLIAMS.
KHETTER MOHAN RAY.

J. W. McKAY,
Secretary to the Bengal Legislative Council.

THE ESTATES PARTITION (AMENDMENT) BILL,

[*1933.*] 1935 ;

Embodying amendments recommended by the Select Committee.

[NOTE.—All matter omitted by the Select Committee has been printed in italics and enclosed in square brackets and all new matter inserted has been underlined.]

A

BILL

[further] to amend the Estates Partition Act, 1897.

Preamble.

WHEREAS it is expedient [*further*] to amend the Estates Partition Act, 1897, in the manner hereinafter [*reappearing* :] appearing : Ben. Act. V of 1897.

It is hereby enacted as follows :—

Short title.

1. This Act may be called the Estates Partition Amendment Act, [*of 1933*] 1935.

2. [*It shall come into force at once.*]

[*Amendment of section 82 of Bengal Act V of 1897.*]

3. [*In section 82 in line 5 after the words " a right to receive rent from the land " the rest be deleted and in place of the portion deleted the following be inserted :—*

" he shall make a partition."]

Repeal of section 82 of Bengal Act V of 1897.

3A. Section 82 of the Estates Partition Act, 1897, is hereby repealed.

J. W. McKAY,

Secy. to the Bengal Legis. Council.

Registered No. C207

No. 4 of 1935

The Calcutta Gazette

THURSDAY, JANUARY 24, 1935.

CONTENTS:

	Page.		Page.
Resolution and Report of the case of sinking of the I. S. V. "Manoung" ..	97—104	Weather and Crop Report for the week ending 16th January 1935	169—172
Report of the Bengal Board of Economic Enquiry on rural indebtedness ..	105—164	Calcutta Improvement Trust Notice ..	173
First Forecast of the Wheat Crop of Bengal, 1934-35	165	Corporation of Calcutta Notices ..	173
Statements of weekly gauge readings on certain rivers in Bengal	166—168	Statement under the Cotton Ginning and Pressing Factories Act, 1925 ..	174
		Vital Statistics of towns of Bengal for the week ending 12th January 1935 ..	175

SUPPLEMENT.

Official Papers.

Resolution and Report of the case of sinking of the I. S. V. "Manoung."

GOVERNMENT OF BENGAL.

Marine Department.

CALCUTTA, THE 18TH JANUARY 1935.

RESOLUTION—No. 102Mne.

The I. S. V. "Manoung" with a large number of passengers and some cattle on board sank in the river Hooghly off Fuldobi on the 7th June 1934. There was considerable loss of life. A Special Court of Enquiry was appointed by Government under section 33 of the Inland Steam Vessels Act, 1917, to investigate the circumstances attending the loss of this vessel. The report of the Court is appended hereto.

2. In the opinion of the Court, the master of the vessel, Asraf Ali, was primarily to blame for the accident and the Court recommended that the Certificate of Competency as 2nd Class Master held by him should be cancelled permanently. The Court also made certain recommendations in regard to the life-saving appliances to be carried by inland steam vessels and recorded certain observations regarding the responsibility devolving upon the district board of Midnapore as lessors of the ferry service in which the vessel was employed.

3. Government have considered the report of the Court and accept the finding of the Court that the serang, Asraf

Ali, was primarily to blame for the disaster. Orders have accordingly been passed under section 45 of the Inland Steam Vessels Act, 1917, permanently cancelling the Certificate of Competency held by the Master of the vessel.

4. Government are advised that the evidence given before the Marine Court establishes a *prima facie* case against—

(*a*) the Master of the vessel of offences under section 58 of the Inland Steam Vessels Act of 1917 and sections 280, 282 and 304A of the Indian Penal Code;

(*b*) the owners of the vessel of offences under section 58 of the Inland Steam Vessels Act of 1917 and sections 282 and 304A of the Indian Penal Code;

(*c*) the booking clerk of offences under sections 282 and 304A of the Indian Penal Code.

Government have accordingly directed the prosecution of the aforementioned persons.

5. The Court's recommendation regarding the revision of the existing rules for the carrying of life-saving appliances is still under examination by the Principal Officer, Mercantile Marine Department, Calcutta District.

6. A copy of the Court's report has been forwarded to the Local Self-Government Department of this Government and their attention has been invited to the comments recorded in answer (3) to question 12 regarding the lack of supervision on the part of the district board, Midnapore.

Order.—Ordered that a copy of the resolution, with a copy of the Court's report, be published in the *Calcutta Gazette*. Ordered also that a copy of the resolution, with the Court's report, be forwarded to the Political, the Judicial and the Local Self-Government Departments of this Government, for information.

By order of Governor in Council,

R. L. WALKER,

Addl. Dy. Secy. to the Govt. of Bengal.

Report.

This Court was appointed to enquire into the circumstances attending the sinking of the I. S. V. "Manoung" on the 7th June last in the Hooghly off Fuldobi. The Deputy Legal Remembrancer, Mr. Khondkar, represented the Crown before us and Mr. Hazra, Counsel, appeared for the serang and the owners of the vessel.

Twenty-five witnesses were examined by Mr. Khondkar and one of the owners, Mr. Gaebele, was examined by Mr. Hazra.

The following facts are admitted by both sides: The "Manoung" was an old Burma coasting vessel. She was purchased by the present owners Mr. Gaebele and one Mr. Fernandez on 16th May 1934. She was surveyed afresh in Calcutta on 1st June 1934 and the certificate (Ex. 1) was issued. The owners secured a lease from the District Board, Midnapore, to run the vessel as a ferry steamer from Petua Ghat to Kakdwip *viâ* Fuldobi. The service was actually commenced from the 4th June 1934. On the 7th June, the "Manoung" left Petua Ghat at 9-30 a.m., with passengers, their goods and cattle on board. A station master had been appointed by Mr. Gaebele for Petua Ghat. This was witness No. VII, Manindra Nath Datta, a callow inexperienced youth who did not know his job. There was no station house either. Consequently, the conductor of the "Manoung," witness No. VI, Krista, was entrusted with the duty of selling of tickets on board the vessel while the so-called station master, Manindra, was asked to stop unauthorised country boats from carrying passengers for hire on this route and thus poaching on the Steamer Company's monopoly. The "Manoung" was an unstable boat and had a list while in motion, first on one side and then on the other. All went more or less well, however, on the day of the disaster, till the vessel was a few miles (4 to 8) away from Fuldobi, when the steamer listed heavily on the port side once—never to rise again and capsized with all hands.

The evidence led before us reveals two sharply divided versions of the occurrence. The conflict in the evidence is on two broad points, viz., (1) the number of passengers and cattle on board and (2) the cause of the disaster.

On the one hand, the Steamer Company's employees and a few of the passengers state that there were 150 to 200 passengers and 20 to 25 cattle on board. The Serang Asraf Ali (witness No. V) and the conductor Krista allege that they actually counted the numbers and according to them, there were actually 152 passengers and 22 cattle. According to this batch of witnesses, a sudden squall of wind sprang up just before the disaster and this caused spray to come in on the starboard side of the ship. According to some of the passengers, the vessel shipped some water too on this side. The passengers and the cattle got panicky as a result and rushed to the port side of the vessel and in consequence the vessel capsized to port.

On the other hand, a large number of passengers have deposed that the "Manoung" was grossly overloaded at Petua Ghat. It was a hât day at Kakdwip and many of the passengers had a lot of luggage with them, betel leaves, cocoanuts, vegetables, ploughs, etc. The vessel was practically packed to suffocation and there was hardly any standing place even on board. So great was the rush that some intending passengers (variously estimated to be 15 to 150 in number) had to be left behind at Petua Ghat for want of space on board. Those who succeeded in getting in complained to Krista about the overcrowding and some got nervous as the vessel listed from one side to the other and implored Krista to let them down on shore at Petua Ghat. But the gangway was withdrawn and they were not allowed to get down. Only one passenger, witness No. XXII Ananta Pattanaik, an educated man, was successful in inducing Krista to allow him to get down. Apparently, he succeeded where others failed, because he perhaps impressed Krista by being able to hold an argument with him in English. As a matter of fact, witness No. VI Krista admits that four passengers were actually put down as they were nervous of the list. The number of passengers are estimated by this group of witnesses to be from 400 to 650. According to them, the number of cattle on board was 30 to 45. There was no squall, no spray or shipping of water and no rush of passengers from one side to the other but the ship was listing heavily from the start and it capsized and turned turtle, as it was taking a turn at the place of the disaster.

Witness No. XXI, Dr. S. N. Sen, Meteorologist, proves that the self-recording anemometer at Saugor Island did not record any squall at about 12 noon on the 7th June last, the wind velocity being something like 14 miles per hour in gusts and the mean velocity being about 10 miles per hour. Saugor Island is not very far from the place of disaster and consequently it is improbable that there should have been any violent squall there. Dr. Sen admits in cross-examination that there may have been a purely local squall at the place of disaster even reaching a velocity up to 30/35 miles per hour without the same being recorded at Saugor. But as Dr. Sen says a squall of this velocity would not be dangerous even to country boats, and less so to a steam-launch and far less to a sea-going vessel like the "Manoung."

We have considered the two versions of the occurrence given before us very carefully and we have come to the unanimous conclusion that the version given by the employees of the Steamer Company and a few of the passengers does not represent the true state of affairs. The second version is in our opinion the substantially correct one, although the witnesses to this version may have exaggerated the numbers to a certain extent. Such exaggeration is after all to a certain extent but natural and does not, in our opinion, discredit the witnesses.

We prefer not to rely on the witnesses who prove the first version (which we may call the Steamer Company's version) for a variety of reasons. The employees, viz., the serang, the conductor and the so-called station master are after all highly interested witnesses. They would naturally try to clear their Company of all blame in the matter and also to clear themselves of all responsibilities for the disaster. As a matter of fact, we must remember that they apprehend they have legal liabilities over the affair, both civil and criminal. It is human nature therefore that they should minimise the numbers as much as they dare and ascribe any other reason for the disaster but overcrowding. Most of the passenger witnesses again, who support them, appear to have resiled from their previous statements before the Chairman of the Local

Board, Rai Bahadur Abanti Kumar Maiti (witness No. XXIII), who held an enquiry into this matter under the orders of the District Magistrate of Midnapore, who is the *ex-officio* Chairman of the District Board. We were not impressed with the rest of the witnesses of this batch either. Their version really does not tally with the circumstances and probabilities of the case.

As has been already mentioned, there is incontrovertible evidence that some passengers did get down at Petua on account of nervousness. It could not merely be on account of the list while the ship stood at the bank. This explanation by Krista does not explain the fact properly. It is evident that the ship must have been uncomfortably overcrowded as witness No. XXII Ananta alleges. There is also reliable evidence that some intending passengers had to be left behind. The only reasons for this must have been sheer want of space on board the ship. Krista and the serang claim to have actually counted the number of passengers coming on board. It was really the serang's duty to limit the number according to the certificate (Ex. 1). Krista, however, says that the serang did not count at all. As regards Krista also, it seems most unlikely that he should have done any counting. Passengers came on board over a long period of time and over the gangway as well as from country boats on both sides of the ship. It was practically impossible for Krista or anybody else to have kept anything like a correct estimate of the number coming on board in these circumstances. Krista would have had to virtually count the passengers again at the time of issuing tickets. It is too much to expect that he would do this duty twice over, specially as it was no duty of his strictly speaking. We do not believe that there was any counting of passengers at all at Petua Ghat but the passengers were allowed to get on board as they liked till every bit of available space on board was completely filled up.

As regards the reasons for the disaster, we are satisfied that there was no squall of any particular severity on the day and consequently no occasion for a panic amongst the passengers of the nature alleged by the serang and the other witnesses who came to support him. The story of the passengers rushing from the starboard to the port side of the steamer and this fact materially contributing to the capsizing of the steamer also fails to impress us. From both versions of the occurrence, it is sufficiently clear that the disaster was a very sudden one which allowed no time to anyone to behave in such panicky manner. It is admitted even by the serang that there was no screaming by anybody. If there had been any such panic as alleged, most certainly we would have expected a regular howl from the panic-stricken passengers even before they rushed from one side of the ship to the other. This is specially so as there were quite a number of female passengers on board and even the men were just common ignorant cultivators and petty traders.

On these grounds we disbelieve the version of the serang and his supporters materially. The other version seems to us to be the more reasonable and probable one.

We have tried to estimate the number of passengers and cattle on board. The estimate given by the passengers seems to us to be unreliable guess work. We are satisfied, however, that the entire space available was crowded up. It appears that there was available for passengers an area of 800 square feet or so on the two decks. There was an additional space of 50 square feet or so (the hatch area) and another 50 square feet or so odd spaces on board, *e.g.*, passages, alley ways, etc. These latter spaces also could be and were, according to us, occupied by the passengers. This gives us a total space of 900 square feet. From the evidence, it appears to us that about one-third of the legitimate passenger area (*i.e.*, one-third of 800 square feet=266 square feet) were occupied by the cattle. This left about 634 square feet for the passengers. The certificate (Ex. 1) allowed 3 square feet per passenger on smooth water. This would apparently allow reasonably comfortable accommodation for the passengers. It is clear to us that on this particular trip, the passengers were much more uncomfortably crowded than this allowance implies. Allowing for space occupied by passengers' luggage, some of which was placed on the decks, the bulk being in the hold, we feel that 2½ square feet per passenger would be a fair and safe estimate to adopt. At this rate 634 square feet would accommodate

about 254 passengers. In round figures, we should say therefore that there were at least 250 passengers on board. As regards cattle, the estimates of the conflicting groups of witnesses are less divergent. We do not therefore find that there were many more cattle beyond 22, the number admitted by the crew. A very conservative estimate of the numbers would therefore be 250 for passengers and 22 for cattle.

The ship was licensed to carry 133 passengers on partially smooth waters. The trip in question was over partially smooth waters. Krista admits it and the point was not seriously contested before us by Mr. Hazra during the recording of evidence. During argument, however, Mr. Hazra contested the point and argued that this particular stretch of the Hooghly has not been legally declared to be partially smooth waters inasmuch as rules have not been duly published under section 74 of the Inland Steam Vessels Act, Mr. Khondkar has not been able to point out in reply the exact notification in the local gazette declaring the limts of smooth and partially smooth waters on the Hooghly. But he has pointed out to us these limits as prescribed in rule 19, Part V of the Bengal Government Publication with title "Manual of Requirements as to the Survey of Vessels for Passenger Certificates (Certificates of Survey) under the Inland Steam Vessels Act, 1884," at page 117 (Edition of 1911). Mr. Hazra has not pointed out any other notification, rule or instruction laying down any different limits. The certificate (Ex. 1) uses the term "partially smooth waters." We are of the opinion that, in the circumstances, the owners and the serang were bound by these limits. I may mention here that witness No. VI Krista admits in his evidence that this was partially smooth water. We hold therefore that the trip was in partially smooth waters and the maximum number of passengers the steamer could carry on this trip under the license was 133. If any cattle were carried, a reasonable corresponding reduction must be made in this number.

We have found that 250 passengers and 22 cattle must have been carried at least on this fatal trip. For 22 cattle, a reasonable reduction of 66 passengers should have been made, assuming each head of cattle to occupy as much space as 3 passengers. No such reduction was made however. On the other hand, as many as 250 passengers were carried. The steamer accordingly carried the equivalent of 316 passengers (66+250) on board instead of 133, an excess of 183. This, in our opinion, amounted to gross overloading.

We next take up the question of the causes that led to the disaster. We have already discredited and disbelieved the theory put forward by the serang. In our opinion three causes contributed to the disaster. Firstly, the vessel was a cranky one, admittedly listing from one side to another of itself. This was apparently due to an insufficiency of ballast in the hold. Secondly, the vessel was badly overcrowded. This resulted in making the ship more top-heavy than ever and consequently less stable. Thirdly, the immediate cause which proved to be the last straw on the back of the camel was the turn that the vessel was taking at the place of the disaster. The swell and the tide apparently affected the stability of the ship for the worse on the helm being put over at this particular spot and the ship capsized as a result of the cumulative effect of all these three causes.

Having disposed of the two main lines of controversy in regard to this disaster, we proceed to answer the questions set before us in this enquiry:—

Question 1.—When S. S. "Manoung" left Petua Ghat on her last voyage, was she properly manned?

Answer.—Our answer to this is in the affirmative.

Question 2.—Was she seaworthy and properly equipped with life-saving appliances?

Answer.—She was undoubtedly seaworthy as her past services as a coasting vessel amply show.

This ship carried six life-buoys. Rule 24, page 57 in Part IV of Manual of Requirements cited above, lays down that there must be one life-buoy for every 25 passengers. This ship was therefore properly equipped for this trip on partially smooth waters provided the maximum number of passengers 133 was adhered to. But on smooth waters, the ship was entitled to carry 266 passengers under the certificate and accordingly it should really have carried 11 life-buoys. Witness No. IV Commander Orchard

admits that the certificate of survey (Ex. 1) is in this respect incorrect.

Question 3.—What was the number of passengers on board?

Answer.—We cannot give an exact figure in answer to this. But we are of the opinion that there must have been at least 250 passengers on board.

Question 4.—How many heads of cattle were on board?

Answer.—As we have explained, there were at least 22 heads of cattle on board. The actual number seems to have been about 25.

Question 5.—Were any steps taken to ascertain that the number of passengers embarked did not exceed the number for which the vessel was certified? If so, what steps?

Answer.—We do not believe any such steps were at all taken.

Question 6.—What reduction was made in the number of passengers to be carried on account of cattle?

Answer.—No reduction was made on this ground.

Question 7.—Was there any cargo on board? If so, to what approximate amount and where stored?

Answer.—There was no cargo properly speaking. But there were some amount of passengers' luggages and goods. Some of it was stored in the after-hold and some on the deck. We are unable to form any approximate estimate of the amount thereof.

Question 8.—What fuel, water and stores were on board?

Answer.—The evidence on this point comes from the crew and Mr. Gaebele entirely. There seems to have been about 9 tons of coal, about 2 tons of water and a little stores belonging to the crew.

Question 9.—To what cause or causes do you attribute the accident?

Answer.—This has been discussed above at length. The causes were threefold:—

(1) There was gross overcrowding.

(2) The ship was cranky and unstable —apparently on account of insufficient ballast.

(3) The ship was taking a turn at the spot and the tide and the swell reacted still more unfavourably on the already defective stability of the ship, thus capsizing the ship.

Question 10.—Was there loss of life, and if so, to what extent?

Answer.—There certainly was loss of life—and in our opinion, a considerable loss too. From the legal evidence before us, we are unable to give even an approximate estimate of the number.

Mr. Khondkar has produced through witnesses two lists of persons alleged to have died in this disaster. The first list contains 107 names and was prepared on 26th June 1934 by witness No. XXIII Rai Bahadur Abanti Kumar Maiti, Chairman of the Local Board, who held an enquiry locally. The second list, containing 201 names, was prepared on 5th September 1934 by witness No. XXV Paresh Nath Banerji, Sub-Inspector of Police. The defence naturally objected to these lists. The lists are not really legally admissible and we cannot pass any opinion whatsoever on the correctness or otherwise of these lists.

We get, however, from some of the witnesses that some of their relatives and acquaintances actually died as a result of this disaster. Thus witness No. X Rakhal Routh says four of his relatives died. Witness No. XI Mahendra Nath Pradhan speaks of one of his acquaintances having died. Witness No. XIII Gajendra Mandal says two of his relatives and four or five of his acquaintances died. Witness No. XXII Ananta says five of his neighbours died. Assuming these men to speak of different persons, 17 persons have been *proved* to have died. Naturally, we could not take all the evidence of this nature which might possibly have been produced on behalf of the Crown. The enquiry would then have assumed unwieldy proportions. Mr. Khondkar on behalf of the Crown did not attempt to exhaust all such evidence quite reasonably.

Question 11.—Did the life-saving appliances carried by the vessel materially contribute to the saving of life? If not, have you any recommendations to make concerning life-saving appliances carried in these small vessels?

Answer.—There is evidence to show that only two men were saved by one of

the life-buoys. The appliances therefore did not materially contribute to the saving of life.

We strongly recommend that the rules providing for the carrying of life-saving appliances should be revised and strengthened. The number of buoys required to be carried by these ships should be doubled. The members of the Court are also agreed that there should be some form of additional buoyant life-saving apparatus to be carried compulsorily by these passenger-carrying vessels. All of us except one member agree that in most cases light bamboo rafts to be carried in such a manner that they would float up as soon as a ship goes down would be the most suitable and the simplest contrivance. We do not, however, propose here to go into the details of the proposal, e.g., specific requirements of rafts or similar contrivances for different kinds of river craft (country boats and steam-launches big and small).

Question 12.—Do you attribute blame to anyone; if so, to whom and why?

Answer.—(1) The serang is to blame for this disaster primarily. In our opinion, he utterly failed in his duty of checking the number of passengers with a view to prevent overloading. He is also to blame for persisting in starting on his voyage with an overloaded steamer. The rules require that tickets are to be sold on land before a passenger is allowed to board a vessel. The serang, as the master of the ship, also failed in his duty in allowing passengers to embark on the vessel without tickets having been issued to them prior to the voyage.

(2) The owners of the ship are also to be blamed for failure to make proper arrangements for selling tickets on land and for controlling the number of passengers going on board, as we have seen, there was no station house built and no proper station master functioning at Petua Ghat. Their conduct is also reprehensible for running a cranky ship like the S.S. "Manoung" without proper ballast. Mr. Gaebele knew of the defect but took no steps apparently for inviting expert opinion as to how to remedy the same.

(3) We are also of opinion that the District Board were also hasty in giving the lease of the monopoly of the ferry to the Steamer Company without first satisfying themselves that the service would be carried on efficiently and safely. The evidence of the Rai Bahadur and of Mr. Gaebele makes this abundantly clear. It also appears that the District Board should have set up some sort of machinery for supervising and controlling the ferry service so that efficiency and safety might be ensured. It appears that there were supervisors for this duty during the time country-boats were serving the ferry, but the supervisor at Petua Ghat was discharged some time ago when a steamer service was established with S.S. "Mavis" doing the trip. Evidently, the District Board was content to leave matters to the entire discretion of the Steamer Company. This, in our opinion, amounted to shirking of responsibilities. By accepting revenue from the ferry service, a moral duty and responsibility are cast on the District Board to look to the safety and comfort of the passengers. They cannot get away from this responsibility by leaving everything to be done by the Steamer Company.

It is not clear to us whether the District Board had a statutory duty in this regard. If they had none, the law or statutory rules thereunder should be amended as found necessary in order to make the District Board responsible for seeing that conditions of the lease are followed and the passengers who pay their fare are carried reasonably, safely and comfortably across.

Question 13.—Should any certificate be dealt with, if so, to what extent?

Answer.—The serang's certificate should be cancelled permanently in view of his incompetence and neglect of duty.

T. H. TUCKETT,

E. S. GRAHAM,
Commander, R. N.,
Members.

The 30th October 1934.

S. SEN,
Chief Presidency Magistrate.

The 24th October 1934.

Assessor's opinion.

I. When "Manoung" left Petua on her last trip, was she properly manned?—Yes.

II. Was she seaworthy and properly equipped with life-saving apparatus?—During her trip down river she was reported to be cranky. She must have been underballasted. The vessel carried six life-buoys instead of double the quantity.

III. What was the number of passengers on board?—Over two hundred.

IV. How many heads of cattle were on board?—Twenty-five.

V. Were any steps taken to ascertain that the number embarked did not exceed the number for which the vessel was certified, if so, what steps?—None.

VI. What reduction was made in the number of passengers to be carried on account of the cattle?—None. Attendants and cattle with passengers were huddled together.

VII. Was there any cargo on board? If so, to what approximate amount and where stowed?—A considerable amount of passengers' luggage and merchandise was stowed on deck, but no freighted cargo in the hold.

VIII. What fuel, water, stores, were on board?—About 3 tons of coal in the bunker *plus* 5 tons of coal stowed in the forehold, as ballast, 6 small water tanks of 40 gallons, and crew's personal belongings.

IX. To what cause or causes do you attribute the accident?—An excessive amount of passengers on both the bridge and main decks *plus* cattle and implements and merchandise rendering the vessel top-heavy. It has been definitely ascertained that the vessel took one roll while altering her course, with the ebb tide athwart her beam and did not recover, but capsized suddenly.

X. Was there any loss of life, if so, to what extent?—Yes, the number cannot be ascertained.

XI. Did the life-saving appliance carried by the vessel materially contribute to the saving of life? If not, have you any recommendation to make concerning life-saving appliances?—No. Owing to the suddenness of the disaster neither the boats nor the life-buoys proved of any avail. As this class of vessel is not obliged to carry but a limited number of life-buoys, we would recommend that the present number of buoys should be doubled and that at least two bamboo (?) rafts should be carried in the most convenient place on the main deck or roof.

XII. Do you attribute blame to any one? If so, to whom and why?—Yes. In the first instance to the owner or manager of the company for the inadequate and careless manner that arrangements were made to embark and disembark passengers, and secondly for the gross ignorance in allowing the passengers to embark without tickets and in not having a competent supervisor or station master at Petua Ghat.

The serang's certificate should be cancelled for endangering his vessel by overloading and criminal negligence.

H. M. BELL,

W. JONES,

Assessors.

The 28th September 1934.

REVENUE DEPARTMENT.

Land Revenue.

NOTIFICATION.

No. 1142L.R.—18th January 1935.—The following report of the Bengal Board of Economic Enquiry on rural indebtedness, together with connected papers, is published for general information. Any public bodies or individuals who desire to make any representations regarding any of the recommendations should submit them to the Secretary to the Government of Bengal, Revenue Department, on or before the 15th of March, 1935.

O. M. MARTIN,
Secy. to the Govt. of Bengal.

Preliminary Report of the Board of Economic Enquiry on rural indebtedness.

The Board was constituted by Government Resolution of 1st December 1933 to conduct inquiries into such economic matters as might be referred to it by the Local Government and to initiate and conduct, subject to the sanction of Government, enquiries into other economic matters.

2. The personnel of the Board was not finally settled till 26th February and the first meeting could not take place till 14th March. In the meantime, however, the note of Government dealing with the indebtedness of the agricultural population of Bengal and discussing the broad aspects of the problem had been circulated to all members. Apart from the question of reconciling the diverse reports of the Jute Committee this is the only subject which has been referred to the Board in accordance with the terms of reference.

3. His Excellency Sir John Anderson was good enough to open the first meeting with a short address which was much appreciated by all the members. A general discussion of the scope of the Board's activities followed and the extent to which it would be necessary for it to make inquiries on its own behalf and the agencies it could employ. It was pointed out that there was a vast volume of statistical information available about the budget and economic condition of agricultural families in Bengal in settlement reports and the publications of the Government of India and the publications of the Agricultural Department of the local Government and the reports of the Banking Committee. The general feeling, however, was to the effect that nothing could be done until this material had been investigated and epitomized and placed before all the members in a convenient form. Arrangements must, therefore, be made for remedying the deficiencies and making supplementary inquiries. It was felt that, if nothing else was necessary, local inquiries must be made as to the extent indebtedness had increased during the last three years of depression.

4. A Statistical Sub-Committee was then selected to undertake these duties. Another sub-committee was appointed to study the legislation which had already been undertaken or suggested in this and other provinces with a view to relieving the problems of usurious interest and growing indebtedness. A third sub-committee was formed to

study the constitution of the new land mortgage banks and other forms of credit societies and to make suggestions for their improvement and development. Both these sub-committees were given the task of studying the financial aspects and considering what sort of staff would be required if a scheme of debt conciliation and rural insolvency proceedings was approved in principle.

5. The Statistical Sub-Committee decided to rely in the first place on the inquiries which had been made in February to March 1934 by the Collectors in two or three villages of each circle in the Province. The information thus gathered as regards 6,359 families in sixteen districts was collated in the statistical laboratory of the Presidency College of Professor Mahalanobis, one of the members of the Board. The object of the analysis was to find out how many families there were in Bengal of the classes with which the Board was chiefly concerned, i.e., those with a stable interest in their lands who were mainly dependent on agriculture for their livelihood who could be classified as solvent, of doubtful solvency, or as insolvent. The test which it was decided to apply was that families whose debt did not exceed twice their present income after deducting the food consumed could be placed in the first class, those whose principal debt did not exceed four years' income in the second class, while those whose debts exceeded the latter figure must be regarded as insolvent. When the forms were devised however the importance of the area which each family cultivated as a *prima facie* indication of its ability to maintain itself in comfort in normal years and to give it reasonable prospects of a surplus wherewith to repay its debts was not realised and the forms did not lend themselves easily to this analysis. There were other defects in the forms also. From the majority of the forms as filled up it was difficult to ascertain the amount of interest that had accumulated and the actual difference between the principal indebtedness in 1928 before the depression and in 1933 after the depression. For this reason the Professor was obliged to base his statistics on the principal indebtedness, ignoring interest. As the scheme recommended by the Board is based on a general belief that the money-lenders are prepared at the present time to sacrifice the greater part of their accrued interest provided they are given sufficient assurances of the repayment of the capital, this defect is not perhaps serious. To some extent it has been neutralised by taking the income at the height of the depression for purpose of comparison with the debt.

More serious defects are the small proportion of the families in each district and therefore in the Province as a whole whose circumstances were investigated and the incurable difficulty of expecting the uneducated tenants of Bengal to remember their outgoings and incomings of three years ago or even to give accurate statements of their present debts, much less of their actual expenditure. The scientists among our members were also much impressed by Professor Bowley's report to the effect that no reliance could be placed on figures based on specimens unless those specimens were selected strictly at random. The instructions to the Circle Officers had been to select typical villages for their enquiries. When, however, the specimens represented so small a portion of the aggregate as they did in the case of these inquiries, most of us thought that the main thing was that no specimen should be abnormal or it must vitiate the results for the district, and this is all that the instruction to the Circle Officer meant in practice.

6. The tests which Professor Mahalanobis was able to apply to the statistics collated for Faridpur, the first district completed, satisfied him that the results were on the whole satisfactory. The general resemblance of the results subsequently placed before them for other districts completely satisfied the other members. The statistical committee were able to present the figures given in Appendix I as a working basis and the Board at their meeting in August accepted them and decided that no further inquiries were essential at this stage, though all additional or supplementary material available should be used for purposes of verification and comparison. Certain inquiries on a revised form were being made in certain districts. They were made under the personal supervision of Babu Nihar Chandra Chakravarty, the Board's Assistant Secretary. They were designed to remedy the defects which experience had disclosed in the previous inquiries, especially those due to varying interpretation by the inquiring officers of the rules laid down for their guidance and hence to eliminate as far as possible the personal element. The results of these supplementary enquiries are summarised in Appendix II. The summary of the results of an economic enquiry made by the Settlement Department in Rangpur is given in Appendix V.

7. On one point of particular importance the inquiries hitherto referred to threw very little light. The purpose of the debt conciliation scheme as outlined in the Government note was to relieve the agricultural debtors. Some members of the Board were inclined to believe that the scheme was almost equally of advantage to the creditors. It was one of the chief assumptions on which we were working that the money-lenders as a whole had failed to collect any interest, much less any part of the capital of their outstanding loans, during the last three years. Some of them might have sued their debtors in the civil courts, but owing to the absence of purchasers at a reasonable price execution proceedings dragged on indefinitely, and if the land was sold it was difficult to get possession or to find other cultivators to take settlement. If the number of cases in which the creditors sold up their debtors was say 5 per cent. only and in 95 per cent. of cases the debtors paid nothing and remained in possession of their land without any penalty, the consequence in course of time would be that the present indebtedness of the vast majority of agricultural population would be wiped out by limitation and the mahajans would lose their capital. If there was anything in this view, then legislation was as essential in the interests of the mahajans as in the interest of the debtors.

By the courtesy of the Inspector-General of Registration, all the Sub-Registrars in the Province were addressed to make particular inquiries as to the proportion of tenants with decrees recently executed against them or hanging over them, but the results have not yet come in.

8. The material which the Board has accepted may be summarised as follows:—

There are 50 lakhs of agricultural families with a permanent and transferable interest in their lands. They are mainly occupancy raiyats though some tenure-holders who cultivate part of their lands are included and some under-raiyats. Agricultural labourers and temporary under-raiyats or bargadars are excluded.

23 per cent. are not in debt at all.
43 per cent. are in debt less than two years' income (Class A).
Total debt Rs. 27 crores.

16 per cent. are in debt less than 4 years' income (Class B).
Total debt Rs. 23 crores.

The total indebtedness is in the neighbourhood of Rs. 97 crores.

22 per cent. of the 22 lakhs of families in the second class have land less than 2 acres and 21 have more than 8 acres. 21 per cent. of the 8·5 lakhs of families in the third class have less than 2 acres and 11·5 more than 8 acres.

9. While this information was being collected, the other sub-committees and the staff of the Board were considering the legislation and experiments that had been made in other provinces and in certain native states and seeking to find an answer to the questions put before them by Government. It was realised that the problem was immense and that it did not matter for practical purposes whether 40 per cent. or 70 per cent. of the agricultural families were in debt or whether their average debt was Rs. 50 or Rs. 150. The real figures for any individual family would only be ascertained when the actual work of dealing with their debt began if then the work of conciliation could only be undertaken as an experiment and the only practical question was the extent of the experiment. This was dependent not on the programme, but on the resources of Government as regards finances and staff.

9A. One of the questions asked in the Government note was whether the agriculturists had sufficient surplus to repay their existing debts. From the figures given in Appendix I, Table 1, there is an average deficit between income and expenditure of 22 rupees. In Bankura the annual deficit is as much as 83 rupees and the agriculturist spends nearly twice his income. But in Chittagong there was an even heavier deficit according to the figures given by the inquiring officers in 1928 before the depression started. On the other hand, in the districts where the subsequent inquiries were made which are summarised in Appendix II, a surplus is shown in all districts which goes as high as 29 rupees in Dacca in 1928. The Board are of opinion that much importance cannot be placed on the figures for income and expenditure either in 1928 or 1933. The important thing is that the average debt shown in the last column is in all cases considerably less than one year's income in 1928. Expenditure has been shown to have decreased by 40 per cent. between 1928 and 1933. There is no reason why it should not decrease still further. There is a possibility also that income may again approximate the figures of 1928, as the price of rice has already gone up in all districts. The Board are therefore of opinion that all the families whose capital debt does not exceed twice the income of 1933 can repay their debt after the conciliation or adjustment by equated payments spread over a period of from 10 to 15 years.

As regards the families in class B whose debts are between 2 and 4 years of their calculated present income, the position is not so clear, but for similar reasons the Board are of opinion that if excessive interest is ruthlessly cut down, they should be able to pay off all their debts in equated payments spread over 15—25 years. In this class everything depends on the amount of land each family has and we have unfortunately not got the figures of average debt of families with 2, 4, 6, 8 acres of land, respectively. The average debt of this class

is 270 and the average income of all families was 218 in 1928. We see no reason to suppose therefore that all families in this class with more than 2 acres of land are not in possession of the necessary surplus. It is probable that the average debt of families with between 2 and 8 acres is less rather than more than the average.

The idea of the Bill which has been drafted is that an Adjustment Board should take up every case and deal with it as a whole. All the debts of each family must be reported and examined and instalments for payment will then be fixed. The civil courts will have no jurisdiction as regards the debtors who have come under the operation of the Act except as regards debts incurred after the award and decrees for such debts cannot be executed until the awarded debts have all been paid. If the debtor fails to exercise economy and to pay off his instalments, the Certificate Officer will issue certificates, and in case of repeated defaults he will sell all the land and treat the debtor as an insolvent. In fixing the instalments the Board will have regard to the surplus. In adjusting the debts it will be guided by amicable arrangements agreed to by a proportion of the creditors under section 12, or by reasonable offers made by the debtor or creditor under section 14. In either case it will adjust all the debts of that particular debtor and there will be no great difference of principle or system.

As regards insolvents who roughly correspond with the class whose debt exceeds four years' income, there will be a difference of principle. In the case of the classes previously mentioned debts will not ordinarily be reduced below the amount of the principal. In the case of insolvents they will. As far as we know all existing and proposed schemes for rural insolvency proceedings provide for selling up all the property of the debtors with the possible exception of their homesteads, agricultural implements, and cattle. We propose to reduce the debts of the insolvent to the amount it is estimated he can pay in instalments extending up to 20 years provided he exercises rigid economy. Our proposal is not so likely to cause an upheaval in agrarian societies and should not give rise to any new problems. It is far kinder to the debtor because he will be left with his land and given another chance. If, however, he does not take advantage of this chance and if he fails to pay the instalments which may be fixed punctually, he must be sold up ruthlessly. Some of our members are of opinion that even his homestead should be liable to sale. It greatly reduces the value of the land to a purchaser if part of it is occupied as a homestead by the ex-tenant. There is a danger in leaving a large number of families on the land with no land of their own to cultivate. It can at best lead to an extension of the system of barga cultivation, which has generally been held to have a bad economic effect on agricultural conditions. Further it seems desirable to make a distinction between the fate of those debtors who are sold up as insolvents after their debt has been drastically reduced to the amount they can pay and those who have failed for perhaps no fault of their own to pay liabilities not so reduced.

10. The Bill referred to above (Appendix IV) is drafted on the lines of the Central Provinces Act and the Punjab Bill. Its main provisions are as follows:—

(*a*) A Debt Adjustment Board will be constituted in as many centres as Government finds possible to receive applications both from debtors and creditors of the agricultural classes. [Central Provinces Act, section 4 (*1*), Bill, section 3 (*1*).]

(*b*) It can dismiss any application summarily; if not it can call for detailed statements from both debtors and creditors and fix a date for hearing both parties within one month; the amount of debts not stated by the creditors will be treated as the amount admitted by the debtor. The Board can extend the time for application if it sees good reason, but is not bound to do so. [Central Provinces Act, section 7 (*1*), Bill, sections 7 (*1*) and 8 (*2*).]

(*c*) The Board, if the creditors and debtors to the extent of 60 per cent. of the debts agree to conciliation, can settle all the debts of that debtor and the award counts as a decree of a civil court. [Central Provinces Act, section 12, Bill, section 12.]

(*d*) The Board, if it thinks either debtor or creditor has made a reasonable offer, can make an award for all the debts provided the amount awarded is not less than the principal of the debt, otherwise it dismisses the application. [Central Provinces Act, section 15, Bill, section 14.]

(*e*) If after an award any instalment becomes overdue, it can be recovered by certificate procedure. [Central Provinces Act, section 13, Bill, section 14AA.]

(*f*) Debts incurred after the award cannot be sued for till all the certificated debts have been realised. [Bill, section 17A.]

N.B.—It is thought that this will deter mahajans from lending more to those debtors and that by notices in union boards and sub-registration offices it is possible to give sufficient publicity to the names of the people who have come under the operation of this Act.

(*g*) Where the Board judges a tenant to be insolvent, it can reduce the debt to the amount he can pay, say 75 per cent. of the value of his land or assets, and fix instalments for its payment. [Bill, section 14(B).]

(*h*) If the instalments are not paid punctually, the Board can sell up all the property except the homestead itself. It will pay creditors proportionately from proceeds and release the insolvent from any further liability. [Bill, section 15.]

(*i*) The civil court will have no jurisdiction while proceedings are pending before the Board and cannot interfere with their awards. All the lands which are the security for the awarded debt will be attached as under section 64, Civil Procedure Code. [Bill, section 7A.]

(*j*) The Board will notify the landlords of the debtor's lands and execution of rent decrees will be postponed for six months. [Bill, sections 14AAA and 17A.]

(*k*) The awards will be transferable and they can be taken over for collection by any approved credit society. [Bill, section 23 (*1*).]

The Board are in favour of legislation on these lines being passed at the earliest possible date and there are not many provisions in the Bill on which there are great differences of opinion. The exception is the question of the effect of attachment of the lands of the debtor till the award is discharged on the security of the landlord for his rent and how the payment of the current rent can be ensured. As a possible means of meeting this difficulty, the proviso to section 17A has been drafted for the consideration of Government.

11. The questions which have given rise to controversy and on which full agreement has not been reached are connected with the working of the proposed Act. The first point on which some of the members are not convinced is whether conciliation alone without some attempt at simultaneous part payment in cash or debentures of the

creditors' dues will yield results worthy of the organisation and expenditure involved. In the Government note it was suggested that unless payments in cash were arranged the creditors would have no inducement to agree to substantial reductions of their claim. All the members are in favour of Government starting land mortgage banks in every subdivision as soon as possible, but as it is regarded as an essential feature of such banks that they should not lend more than 50 per cent. of the market value of the debtor's land, it is felt that these banks will not, even if they could be established in great numbers in a short time, be of much help to the ordinary cultivator, the class which represents 70 per cent. of the rural population of Bengal. The essential feature of the existing rural co-operative banks is that each member should be security for all others and even if these banks were available in every village the scheme is too big to be worked on purely co-operative lines. If Government could see its way to raising Rs. 2 crores and distributing it like agricultural loans through its own officers in order to pay to each mahajan one out of 8 or 12 instalments of every awarded debt, the chances of the scheme being a success would be increased enormously. If Government thinks that its natural objection to take upon itself the odium of becoming the direct money-lender of the agriculturist is insuperable, it might be considered whether each union board could become a temporary bank lending money advanced by Government from a public loan. For a year after the first instalment had been advanced there would be no work to do and there would be time to get the account system in working order or to arrange for independent banks to take over the credits and liabilities. Whether any scheme is possible or not with this end in view the members who are doubtful still unhesitatingly recommend that debt conciliation and adjustment should be taken up on as wide a scale as possible. They are of opinion that the fact that the machinery of the Certificate Department will be available for realising their dues instead of the civil court and that the Certificate Officer will himself be responsible on application for taking the initiative and that the lands of the debtors will be attached all the time the instalments are being paid will be sufficient inducement, more especially perhaps to the creditors of families who are deeply in debt and from whom they cannot expect any voluntary payments. Though this is not exactly clear from the Bill some of the members contemplate that the Revenue Officer will be responsible for receiving all monies due to creditors and that the creditors will get nothing direct. This seems to be a heavy burden to put on the Revenue Officer, but it would avoid disputes and the giving of insufficient credit for payments actually made.

12. The next question was how far the working of the Act should be treated as an experiment. This is largely a matter of words because the scheme must be an experiment. It is obviously impossible to deal with the debts of 39 lakhs of families simultaneously. It has been assumed that no Board can deal with more than 600 cases a year and that it would take 680 Boards to cover the Province in three years even if their attention is confined to the 12·30 lakhs of solvent families with between 2 and 8 acres of land. (Appendix III.)

The Board contemplate that as a beginning one Board should be constituted in every Chaukidari Circle Officer's jurisdiction at once with the Circle Officer or a Munsif as President and that a second officer, preferably a junior Sub-Deputy Collector or a Settlement

Kanungo should be appointed as his executive officer and Certificate Officer. Two or three retired Government officers or non-officials would be members, and after this Board had acquired some experience each of the original members would go out with new members to work as subsidiary Boards independently. There are at present 179 Circles in Bengal and circles where there were many applications and where the work prospered would gradually be split up into two, each with its own Circle Officer and executive officer. The number of panels or subsidiary Boards in each circle would depend on the quality of the people available as members and the general progress. In order to complete the programme in three years, on an average each Board would have to be divided eventually into 6 or 7 subsidiary Boards working independently. The operation of the Act would be an experiment in the sense that its working would be constantly watched and its system varied as defects became apparent; further, considerable variations would be allowed in different areas to give an opportunity of testing various methods. But to judge the success of an experiment of this nature from the point of view of determining whether it was possible to prevent the agriculturists getting into debt again or whether in reasonable number of cases no loss at all to Government was involved would take 10 or more years. The Board are strongly of opinion that the scheme should not be treated as an experiment from this point of view; they say that similar schemes have been successful in one Indian State and that Government must act on the presumption that it will be a success because no alternative has been suggested by anybody and there is absolute agreement that the present indebtedness of the agricultural population and the inability of the mahajans to recover their full dues and to lend out more money even in urgent cases call for drastic remedies. It has been argued that as there is no other scheme to fall back on if this is a failure, it must be made a success by profiting from the mistakes and correcting the procedure, and altering the law. A set determination to proceed with the scheme in spite of failures and losses here and there will rally in its favour all workers social and political.

The Board do not, therefore, recommend that the Act should be applied only to a few districts or to one thana or subdivision even in each district.

13. It was the main recommendation of the District Administration Committee that Government should have their own resident officer in units as small as possible. It is the proposal of others including the Indian Chamber of Commerce that there should be in every group of unions resident officers to bring into co-ordination the work of the Agricultural, Industries, Co-operative and other departments. The scheme of our Board would work in with all these proposals of which the object was closer touch between Government and the people in the villages. Circles would become smaller and their Circle Officer would have wider and more diverse duties. With the help of their executive officers they might revise and then maintain the record-of-rights in their circles, they would execute all certificates, inspect co-operative banks and enforce jute restriction and other schemes connected with the economical development of the villages.

14. As regards the cost of the extra staff required, it is proposed that there should be a levy of 1½ per cent. in court-fee stamps on every application for adjustment and that the Circle Officer should

realise all instalments and pay the creditors and that there should be a levy of 3 per cent. on all sums collected and paid. If the creditors eventually paid these fees it would be much cheaper than the costs they would have incurred in civil courts.

15. The Bill as drafted provides for the reduction of the debts of insolvents to the amount they can pay in not more than 20 instalments. If a man's property is only worth 60 per cent. of his total debts, the mahajan by selling him up in the civil court would not realise as much as 60 per cent. of his claims. It is argued therefore that the creditors cannot lose by agreeing to such adjustment and the relief the scheme will give to such people is far more valuable than the relief solvent debtors will obtain. Sir E. Benthall after first being in favour of taking up the easier cases first is now of opinion that the definite objective should be to deal with the more difficult cases first. The majority of the Board are not in favour of limiting the operation of the Act as drafted to any particular class of debtors either in the first stage or eventually. In every area the class of cases given preferential treatment will depend on circumstances, e.g., if funds were available for paying instalments, then the money available should be used to benefit as many individuals as possible and cases of indebtedness of less than Rs. 200 might be taken up first: If any restriction is imposed the Board suggests that no cases of indebtedness exceeding Rs. 1,000 should be taken up and that families with more than 8 acres could be left out on the ground that such people could sell some of their land and look after themselves. If further restriction is necessary families with less than 2 acres could be left out because it is doubtful if such families can ever support themselves on the proceeds of their land alone. If their mahajans are willing to leave them alone and to get what they can gradually, Government would be doing the debtors no good by interfering. If they are in debt to any great extent it is impossible to prevent them becoming landless labourers sooner or later because they have no surplus wherefrom to pay interest or principal of any debt.

16. One of the points raised in the Government note was the prevention of future borrowing. Mr. N. Sarkar was very anxious that future borrowing should not be restricted too drastically. A man might want to buy more land and temporary borrowings to buy seeds, etc., might be necessary in many cases. The Board are of opinion that when say 6 out of 8 instalments have been paid there is no reason why the debtors should not be able to borrow again for productive purposes and they do not think that the provisions of the Bill as drafted will prevent it.

On the other hand the Bill seems to go far enough in preventing further borrowing. Until the awarded debt is discharged, the would-be lender will have no security except the ornaments or personal credit of his borrowers. Proceedings of the magnitude contemplated cannot go on anywhere in secret and the money-lenders should not be allowed to plead ignorance if before issuing a loan they have failed to ascertain whether the borrower has taken advantage of the Act or not.

17. All the members have agreed that arrear rents except those barred by limitation should be included in the certificated award and that possibly they should be given priority of payment; nearly all the members have agreed that the different tenancies of the debtor should

be attached on the analogy of section 64 of the Civil Procedure Code, until the awarded debt is paid off. But there are great difficulties in providing for the regular payment of current rent. The award will not be of much use to the creditors if in the meantime the tenant defaults and the landlord sells the holding under the Tenancy Act. But the landlords will resist the proposals vigorously if they think that their long admitted right to treat rent as a first charge is being encroached on. At first it was proposed that section 168 of the Tenancy Act should apply but this merely means that if the first sale subject to the encumbrance of the awarded debts fails, another sale free of this encumbrance will take place. The next proposal was that the debtors should be responsible for producing their rent receipts before the Revenue Officer each year, and that if they failed to do so he should take action under the Certificate Act, as if an instalment had not been paid. The proposal in the Bill is that the landlord can bring a suit for current rent, but he must give six months' notice before proceeding to execution. That would, it is thought, give time for the creditors to arrange for payment.

18. During the past few years there have been combinations of raiyats not to take settlement of purchased holdings and it is well known that certificates against the members of bankrupt co-operative banks filed by a liquidator are seldom successful. Past experience shows that there is a considerable danger that if defaults are common in any neighbourhood and many villagers are sold up, nobody will buy the land for fear of litigation and that the creditor, whether he be Government or a land mortgage bank or a private individual if he has to purchase, will not be able to settle the land. It was suggested that in the case of sales under this Act the purchaser should acquire the land with a clear title and only be responsible for money claims as compensation to any co-sharer who declared that he was not a party to the proceedings. Opinions are divided, but it seems doubtful if the general public would at present consent to any such special provision. If the Collector has the power to deliver possession to the purchaser by ejecting the old tenant or his sub-lessees, pending the decision of title in a regular civil suit, it is possible that if the public approve the principles and are satisfied that the instalments fixed for payment were well within the capacity of the debtor to pay, they will have no sympathy with defaulters and that the difficulty will not often arise. Section 14AAA as incorporated in the Bill for the consideration of Government may suggest lines on which a solution of the difficulty may be found.

19. The members are practically unanimous that interest on the awarded debt should not exceed 6 per cent. Whether it will be necessary to calculate this annually and to add it to the instalments is not certain. If Government or a bank advanced the amount it would be convenient if they could wait till all the instalments had been paid and then collect an extra instalment when the debtor was otherwise free from debt to cover all interest and expenses.

20. When the Bill was first drafted it was assumed on the analogy of the Central Provinces Bill that all awards would be registered. Most of the members are now of opinion that the registration will be unnecessarily expensive and troublesome. The awards will be filed in the office of the Conciliation Board or when the Board ceases to function in the office of the Revenue Officer who will carry on the executive functions of the Board. Record in this office should be given the effect of registration by the Act.

APPENDIX I.

Table I—Provincial Table : Family averages of Land, Income, Expenditure, etc.

Districts.	No. of families surveyed.	Average earners.	Average Dependents.	Average family size.	Average land (in acres).	1928 Average (in rupees).				1933 Average (in rupees).			
						Income.	Expenditure.	Surplus.	Debt.	Income.	Expenditure.	Surplus.	Debt.
1	2	3	4	5	6	7	8	9	10	11	12	13	14
1. Burdwan ..	490	1·80±·04	4·32	6·12±·11	6·06±·16	272± 8	276± 8	−4	138±15	156±6	197± 7	−41	219±13
2. Birbhum ..	252	2·39±·07	4·04	6·43±·15	7·09±·47	238±10	197± 6	+41	163±25	172±9	169± 8	+3	182±16
3. Bankura ..	258	2·25±·08	4·33	6·58±·18	8·04±·59	146± 6	267±10	−121	113±17	86±6	169±12	−83	244±17
4. Midnapore ..	559	2·40±·04	5·10	7·50±·11	11·13±1·25	228±16	238±15	−10	95±28	144±9	166± 9	−22	187±29
5. Murshidabad ..	233	2·19±·06	4·57	6·76±·17	5·96±·36	193±13	187± 9	+11	52±15	132±8	142± 8	−10	106 ±9
6. Jessore ..	490	2·30±·04	3·70	6·00±·09	7·13±·28	164± 5	165± 7	−1	52± 6	84±3	97± 3	−13	81± 4
7. Nadia ..	304	2·35±·06	4·73	7·08±·16	12·03±·46	235± 9	239± 8	−4	105±20	141±6	163± 6	−22	199±15
8. Pabna ..	297	1·92±·04	4·75	6·67±·17	4·13±·17	179± 6	149± 6	+30	101±14	79±3	82± 6	−3	158±10
9. Bogra ..	397	1·92±·03	4·71	6·63±·12	5·74±·37	257± 8	236±11	+21	114± 9	128±5	134± 8	−6	150± 9
10. Rangpur ..	1,043	2·06±·03	5·24	7·30±·09	7·40±·20	220± 5	213±14	+7	102± 7	99±2	120± 3	−21	147± 6
11. Rajshahi ..	297	2·12±·05	3·98	6·10±·14	6·30±·28	222±14	183± 7	+39	106±17	113±6	112± 4	+1	184±19
12. Malda ..	77	2·71±·11	2·63	5·34±·21	5·81±·52	48± 6	49± 6	−1	6±12	29±4	26± 3	+3	11± 3
13. Dacca ..	549	2·26±·04	5·03	7·29±·10	4·29±·26	235± 7	250± 7	−15	158±12	115±4	144± 3	−29	286±11
14. Faridpur ..	424	1·76±·04	4·72	6·48±·14	4·46±·21	207± 6	198± 7	+9	146± 7	105±3	118± 5	−13	217±10
15. Chittagong ..	344	2·43±·06	5·40	7·83±·14	5·47±·26	136±20	225±15	−89	90±19	81±5	156± 8	−75	265±14
16. Tippera ..	345	2·02±·04	5·75	7·77±·15	3·98±·14	247± 6	230± 6	+17	197±21	123±3	121± 4	+2	290±17
All districts	6,359	2·14·01	4·75	6·89±·04	6·73±·14	218± 4	217± 3	+1	112± 4	114±2	136± 2	−22	187± 4

Table 2—Percentage number of families in different debt class.

District.	No. of families surveyed.	Number of families in each class.				Percentage number of families in each class.			
		No debt.	A.	B.	C.	No debt.	A.	B.	C.
1	2	3	4	5	6	7	8	9	10
1. Burdwan	490	120	197	92	81	24·5±1·3	40·2±1·5	18·8±1·2	16·5±1·1
2. Birbhum	252	62	138	37	20	24·6±1·8	52·8±2·1	14·7±1·5	7·9± ·8
3. Bankura	258	51	66	45	96	19·8±1·7	25·6±1·8	17·4±1·5	37·2±2·0
4. Midnapore	559	225	209	62	63	40·2±1·4	37·4±1·4	11·1± ·9	11·3±0·9
5. Murshidabad	232	57	138	25	17	24·6±1·9	57·4±2·2	10·8± ·9	7·2±1·1
6. Jessore	490	142	240	59	49	29·3±1·4	48·6±1·5	12·1±1·4	10·0± ·9
7. Nadia	304	51	176	29	48	16·8±1·4	57·9±1·9	9·4±1·1	15·9±1·4
8. Pabna	297	44	136	68	49	14·8±1·4	45·8±1·9	22·9±1·6	16·5±1·4
9. Bogra	397	97	159	63	78	24·4±1·5	40·1±1·7	15·9±1·2	19·6±1·3
10. Rangpur	1,043	252	460	186	145	24·2±1·7	43·9±1·0	17·9±0·8	13·9±1·3
11. Rajshahi	297	75	127	56	39	25·3±1·7	42·9±1·9	20·9±1·6	11·1±1·3
12. Malda	77	56	12	1	8	72·7±3·4	15·6±2·8	1·3± ·9	10·4±2·3
13. Dacca	549	68	241	100	145	11·8± ·9	43·9±1·4	18·2±1·1	26·1±1·3
14. Faridpur	424	72	195	77	80	17·0±1·3	46·0±1·6	18·2±1·3	18·8±1·3
15. Chittagong	344	59	101	57	127	17·1±1·4	29·5±1·6	16·7±1·4	36·8±1·7
16. Tippera	346	36	155	91	64	10·4±1·1	44·8±1·8	26·6±1·6	18·2±1·4
All districts ..	6,359	1,462	2,740	1,048	1,109	23·0±0·4	43·1± ·4	16·5± ·3	17·4± ·3

Table 3—Percentage number of Families in Classes A and B, holding different quantity of lands.

District.	Number of families surveyed.	Number of families in Class A.	Percentage number of families in each land, Class A.					Number of families in Class B.	Percentage number of families in land, Class B.				
			0—2	2—4	4—6	6—8	Over 8.		0—2	2—4	4—6	6—8	Over 8.
1	2	3	4	5	6	7	8	9	10	11	12	13	14
1. Burdwan ..	490	197	5·3± ·7	9·8± ·9	8·8± ·8	5·7± ·7	10·6± ·9	92	2·0± ·4	7·1± ·8	3·5± ·6	2·4± ·5	3·7± ·6
2. Birbhum ..	252	133	9·9±1·2	17·1±1·6	10·7±1·3	4·0± ·8	11·1±1·3	37	1·6± ·5	4·4± ·9	3·6± ·8	2·4± ·6	2·8± ·7
3. Bankura ..	258	66	2·7± ·7	7·0±1·1	3·5± ·7	5·4± ·9	7·0±1·1	45	5·0± ·9	6·6±1·6	1·9± ·6	0·4± ·3	3·5± ·8
4. Midnapore ..	559	209	9·8± ·9	9·8± ·9	7·2± ·7	3·1± ·5	7·5± ·7	62	1·4± ·3	3·6± ·5	2·1± ·4	1·1± ·3	2·9± ·5
5. Murshidabad ..	233	133	11·2±1·4	19·4±1·7	10·8±1·4	7·8±1·2	8·2±1·2	25	3·0± ·5	3·0± ·5	1·7± ·4	0·9± ·3	2·2± ·4
6. Jessore ..	490	240	9·6± ·9	10·4± ·9	8·6± ·8	5·1± ·7	14·9±1·1	59	3·5± ·8	3·3± ·8	1·2± ·5	1·6± ·5	2·5± ·7
7. Nadia ..	304	176	34·2±1·9	19·4±1·2	3·2± ·7	0·7± ·3	0·3± ·2	29	1·6± ·5	4·2± ·8	1·6± ·5	1·3± ·4	0·7± ·3
8. Pabna ..	297	136	12·8±1·3	10·8±1·2	11·8±1·2	4·7± ·8	5·7± ·9	68	6·7± ·9	9·8±1·1	4·4± ·8	1·0± ·4	1·0± ·4
9. Bogra ..	397	159	12·9±1·1	11·6±1·0	6·3± ·8	4·0± ·7	5·3± ·7	63	4·5± ·7	5·5± ·8	3·3± ·6	0·3± ·2	2·3± ·5
10. Rangpur ..	1,043	460	7·9± ·6	10·9± ·6	7·1± ·5	6·0± ·5	12·1± ·7	186	1·4± ·2	4·9± ·4	3·3± ·4	2·8± ·3	5·5± ·5
11. Rajshahi ..	297	127	8·7±1·1	12·7±1·3	8·1±1·1	5·1± ·9	8·1±1·1	56	3·0± ·7	5·1± ·9	4·4± ·8	4·0± ·8	4·4± ·8
12. Malda ..	77	12	3·9±1·5	2·6±1·2	1·3± ·8	1·3± ·8	6·5±1·9	1	..	..	1·3± ·9	..	..
13. Dacca ..	549	241	14·2±1·0	15·1±1·0	7·3± ·7	2·2± ·4	5·1± ·6	100	4·4± ·6	5·6± ·7	4·4± ·6	2·2± ·6	1·6± ·4
14. Faridpur ..	424	195	14·6±1·1	11·3±1·0	10·4±1·0	3·3± ·6	6·4± ·8	77	7·1± ·8	5·9± ·8	2·8± ·5	0·7± ·3	1·7± ·4
15. Chittagong ..	344	101	7·3± ·9	10·3±1·1	6·1± ·9	2·6± ·6	3·2± ·6	57	4·7± ·8	6·1± ·9	3·2± ·6	1·5± ·4	1·2± ·4
16. Tippera ..	345	155	16·6±1·3	12·7±1·2	7·8± ·9	3·2± ·6	4·6± ·8	91	8·7±1·0	7·2± ·9	6·9± ·9	0·9± ·3	2·9± ·6
All districts ..	6,359	2,740	9·6± ·2	11·5± ·3	8·2± ·2	4·7± ·2	9·2± ·2	1,048	3·5± ·2	5·1± ·2	3·2± ·1	1·6± ·1	1·9± ·1

Table 4—Total Debt in each class together with Averages and Percentages.

Districts.	No. of families surveyed.	1933 : Debt in each class (in rupees).				1933 : Average Debt in each class (in rupees).				Percentage debt in each class.		
		A	B	C	A+B+C	A	B	C	A+B+C	A	B	C
1	2	3	4	5	6	7	8	9	10	11	12	13
1. Burdwan	490	36,629	28,663	42,164	107,456	186	312	521	290	34·1	26·7	39·2
2. Birbhum	252	19,451	10,833	10,414	40,698	146	293	521	214	47·8	26·6	25·6
3. Bankura	258	13,505	12,097	37,305	62,907	204	269	389	304	21·5	19·2	59·3
4. Midnapore	559	31,570	21,985	51,052	104,607	151	354	810	313	30·2	21·0	48·8
5. Murshidabad	232	11,590	7,110	6,114	24,814	87	284	360	142	46·7	28·7	24·6
6. Jessore	490	17,344	11,178	11,365	39,887	72	189	232	115	43·5	28·0	28·5
7. Nadia	304	23,500	10,330	26,520	60,350	134	356	553	239	38·9	17·2	43·9
8. Pabna	297	12,046	12,743	21,571	46,360	89	187	440	183	26·0	27·5	46·5
9. Bogra	397	19,900	11,279	28,266	59,445	125	179	362	196	33·5	19·0	47·5
10. Rangpur	1,043	46,904	46,439	59,551	152,894	102	250	411	193	30·7	30·4	38·9
11. Rajshahi	297	13,869	14,659	25,358	53,886	109	262	768	243	25·7	27·2	47·1
12. Malda	77	335	15	490	840	28	15	61	40	39·9	1·8	58·3
13. Dacca	549	31,620	35,929	89,625	157,174	131	359	618	323	20·1	22·9	57·0
14. Faridpur	424	23,424	20,210	48,582	92,216	120	261	607	262	25·4	21·9	52·7
15. Chittagong	344	13,628	10,161	67,357	91,146	135	178	530	220	15·0	11·1	73·9
16. Tippera	345	20,989	31,526	44,019	96,534	135	346	599	311	21·7	32·7	45·6
All districts	6,359	336,304	285,157	569,753	1,191,214	123	270	517	243	28·2	23·9	47·9

APPENDIX II

Table 1.—Family averages of land, income, expenditure, etc.

Districts.	Number of families surveyed.	Earners.	Dependents.	Size of family.	Land (in acres).	1928 (in rupees.)				1933 (in rupees).			
						Income.	Expenditure.	Surplus.	Debt.	Income.	Expenditure.	Surplus.	Debt.
1	2	3	4	5	6	7	8	9	10	11	12	13	14
1. Midnapore ..	101	2·4	6·0	8·4	6·07	208	201	+7	103	143	158	−15	195
2. Tippera ..	304	1·9	4·9	6·8	3·01	171	163	+8	112	116	109	+7	250
3. Dacca ..	112	2·0	5·7	7·7	2·10	385	356	+29	192	302	302	..	302
4. Murshidabad ..	100	1·6	4·7	6·3	3·22	112	111	+1	12	100	103	−3	25
5. Mymensingh ..	313	2·0	5·0	7·0	3·07	214	208	+6	94	130	145	−15	200
6. Pabna ..	246	1·6	3·5	5·1	4·18	299	272	+27	70	178	169	+9	100
7. Bogra ..	372	1·9	3·7	5·6	3·80	192	147	+45	66	97	88	+9	96

Table 2.—Percentage number of families in different debt classes.

Districts.	Number of families surveyed.	Number of families in each class.				Percentage number of families in each class.			
		No debt.	A	B	C	No debt.	A	B	C
1	2	3	4	5	6	7	8	9	10
1. Midnapore ..	101	22	57	9	13	21·7	56·4	9·0	12·9
2. Tippera ..	304	41	145	66	52	13·5	47·7	21·7	17·1
3. Dacca ..	112	44	45	11	12	39·3	40·2	9·8	10·7
4. Murshidabad ..	100	39	61	..	..	39·0	61·0	..	..
5. Mymensingh ..	313	45	169	51	48	14·4	54·0	16·3	15·3
6. Pabna ..	246	66	156	20	4	26·8	63·4	8·2	1·6
7. Bogra ..	372	201	112	29	30	54·0	30·1	7·7	8·0

Table 3.—Percentage of families in classes A and B holding different amount of land.

Districts.	Number of families surveyed.	Number of families in class A	Percentage number of families in each land, class A.					Number of families in class B	Percentage number of families in land, class B.				
			0-2	2-4	4-6	6-8	over 8		0-2	2-4	4-6	6-8	Over 8.
1	2	3	4	5	6	7	8	9	10	11	12	13	14
1. Midnapore ..	101	57	32·8	6·9	4·9	5·9	5·9	9	4·0	2·0	..	..	3·0
2. Tippera ..	304	145	25·0	12·5	5·3	2·9	2·0	66	9·9	6·9	2·6	0·7	1·6
3. Dacca ..	112	45	32·2	8·6	0·9	2·6	0·9	11	6·2	1·8	..	..	1·8
4. Murshidabad ..	100	61	23·0	22·0	8·0	1·0	7·0	..	..	..	..	..	..
5. Mymensingh ..	313	169	33·9	9·3	4·8	2·9	3·1	51	8·0	2·9	2·5	0·6	2·3
6. Pabna ..	246	156	35·4	10·2	7·7	3·2	6·9	20	5·0	1·2	0·8	0·4	0·8
7. Bogra ..	372	112	30·3	30·3	15·1	12·5	11·6	29	24·1	24·1	31·0	3·4	17·2

Table 4.—Total debt in each class together with averages and percentages.

Districts.	Number of families surveyed.	1933 : Debts in each class (in rupees).				Percentage Debt in each class.			Average debt in each class.			
		A	B	C	Total.	A	B	C	A	B	C	A+B+C.
1	2	3	4	5	6	7	8	9	10	11	12	13
1. Midnapore	101	4,403	4,767	10,557	19,727	22·3	24·2	53·5	77	330	812	250
2. Tippera	304	14,618	20,177	41,240	76,035	19·2	26·5	54·2	101	306	793	289
3. Dacca	112	12,046	11,135	10,680	33,861	35·8	32·8	31·4	268	1,012	890	498
4. Murshidabad	100	2,490	..	..	2,490	100·0	..	..	41	..	..	41
5. Mymensingh	313	17,571	19,463	25,614	62,648	28·0	31·1	40·9	104	382	534	238
6. Pabna	246	16,131	6,695	1,796	24,622	65·5	27·2	7·3	103	335	449	137
7. Bogra	372	10,103	6,976	18,670	35,749	28·2	19·5	52·2	90	241	622	209

APPENDIX III.

Table A.

Districts.	Families in thousand.				No. of Board required to deal within 3 years per 600 cases per year.				Circles in districts.			Estimated cost (in rupees).			Total debt (in lakhs).	Fees at 1¼ per cent.
	A.	B.	C.	Total.	A.	B.	C.	Total.	No. of full time officers.	No. of half time officers.	No. of non-official Boards.	Establishment charges.	Pay of revenue officers.	Total.		
1	2	3	4	5	6	7	8	9	10	11	12	13	14	15	16	17
1. Burdwan ..	47	22	20	89	26	12	11	49	7	14	28	2,11,680	1,51,200	3,62,880	2,57	3,85,500
2. Birbhum ..	52	15	8	75	29	8	4	41	5	10	26	1,77,120	1,08,000	2,85,120	1,59	2,38,500
3. Bankura ..	27	17	38	82	15	9	21	45	6	12	27	1,94,400	1,29,600	3,24,000	2,50	3,75,000
4. Midnapore ..	136	39	39	214	76	21	21	118	12	24	82	5,09,760	2,59,200	7,68,960	6,68	10,02,000
5. Murshidabad ..	63	12	8	83	35	7	4	46	6	12	28	1,98,720	1,29,600	3,28,320	1,17	1,75,500
6 Jessore	108	26	22	156	60	15	12	87	8	16	63	3,75,840	1,72,800	5,48,640	1,78	2,67,000
7. Nadia	62	10	17	89	34	6	9	49	8	16	25	2,11,680	1,72,800	3,84,480	2,13	3,19,500
8. Pabna	69	35	26	130	38	19	15	72	6	12	54	3,11,040	1,29,600	4,40,640	2,39	3,58,500
9. Bogra	59	23	29	111	33	13	16	62	3	6	53	2,67,840	64,800	3,32,640	2,19	3,28,500
10. Rangpur ..	120	49	38	207	67	27	21	115	9	18	88	4,96,800	1,94,400	6,91,200	4,02	6,03,000
11. Rajshahi ..	84	41	21	146	47	22	12	81	7	14	60	3,49,920	1,51,200	5,01,120	3,52	5,28,000
12. Malda	15	1	9	25	8	1	5	14	4	8	2	60,480	86,400	1,46,880	10	15,000
13 Dacca	178	73	105	356	99	41	58	198	9	18	171	8,55,360	1,94,400	10,49,760	11,58	17,37,000
14. Faridpur ..	145	57	60	262	81	32	33	146	9	18	119	6,30,720	1,94,400	8,25,120	6,84	10,26,000
15. Chittagong ..	28	15	35	78	16	8	19	43	5	10	28	1,85,760	1,08,000	2,93,760	2,49	3,73,500
16. Tippera	187	112	75	374	104	62	42	208	9	18	181	8,98,560	1,94,400	10,92,960	11,66	17,49,000
All districts ..	1,380	547	550	2,477	768	303	303	1,374	113	226	1,035	59,35,680	24,40,800	83,76,480	63,21	94,81,500

Table B.

Districts.	Families (in thousand).					No. of Boards needed in 3 years.				Circles in the Districts.			Estimated costs (in rupees).			Total debt (in lakhs).	Fees at 1¼ per cent.
	Total families.	A	B	C	A+B+C.	A	B	C	A+B+C.	No. of officers (full).	No. of officers (Half).	No. of non-official Boards.	Establishment charges.	Pay of revenue officers.	Total.		
1	2	3	4	5	6	7	8	9	10	11	12	13	14	15	16	17	18
1. 24-Parganas .	202	87	33	35	155	48	18	20	86	7	14	65	3,71,520	1,51,200	5,22,720	3,78	5,67,000
2. Hooghly ..	84	36	14	15	65	20	8	8	36	5	10	21	1,55,520	1,08,000	2,63,520	1,57	2,35,500
3. Howrah ..	37	16	6	6	28	9	3	3	15	3	6	6	64,800	64,800	1,29,600	69	1,03,500
4. Bakarganj ..	332	143	55	58	256	79	31	32	142	10	20	112	6,13,440	2,16,000	8,29,440	6,21	9,31,500
5. Dinajpur ..	201	87	33	35	155	48	18	20	86	7	14	65	3,71,520	1,51,200	5,22,720	3,75	5,62,500
6. Jalpaiguri ..	63	27	10	11	48	15	6	6	27	3	10	12	1,16,640	1,08,000	2,24,640	1,18	1,77,000
7. Mymensingh	601	259	99	105	463	144	55	58	257	18	36	203	11,10,240	3,88,800	14,99,040	11,24	16,86,000
8. Noakhali ..	151	65	25	26	116	36	14	14	64	5	10	49	2,76,480	1,08,000	3,84,480	2,82	4,23,000
9. Khulna ..	170	73	28	30	131	40	16	17	73	6	12	55	3,15,360	1,29,600	4,44,960	3,18	4,77,000
Total ..	1,841	793	303	321	1,417	439	169	178	786	66	132	588	33,95,520	14,25,600	48,21,120	34,42	51,63,000

Explanatory Statement to Appendix III.

Estimate for Debt Conciliation work in Faridpur.

(The total number of families of the raiyats with occupancy rights in land has been taken from the total number of earners of the cultivating class shown in the Census Tables. Probably this is an overestimate because some families have more than one " Earner ".)

Number of families of classes A, B and C debtors are 145,000, 57,000 and 60,000, respectively.

Progress of work—

600 cases per Board per year for whole-time Board.

Disposal of work in 3 years—

81, 32 and 33 Boards in all 146 Boards would be required for A, B and C classes, respectively.

Cost for each Board—

	Per mensem.
	Rs.
One Revenue Officer	200
,, Orderly	10
,, Clerk Peshkar	30
,, Enquiry Agent	30
Fixed travelling allowance for Enquiry Agent	10
Peon	12
Boat hire, etc., for non-official members of Board	20
Contingencies	8
Total ..	320

There are 9 circles in the district, each on an average with one Sub-Registrar, one Circle Officer, one Sub-Inspector of Schools and one Co-operative Auditor. Altogether they will give 18 officers' work if they work half time. If only one Revenue Officer be given for each circle and the works of the Boards are done to a large extent by non-official agency, the actual extra cost incurred by Government on gazetted officers will be the pay of these 9 Revenue Officers only. Each Subsidiary Board will, however, require its own clerk and peons and Enquiry Agent. Assuming, however, that half the pay of all existing Government officers proposed to be employed on this work should be included in the scheme. The calculation of cost is as follows :—

	Rs.
9 Revenue Officers for three years, 36 half-time officers or 18 officers, i.e., 27 officers in all for three years at Rs. 200 per mensem	1,94,400
Establishment for 146 Boards at Rs. 120 per mensem for three years ..	6,30,720
Total ..	8,25,120

APPENDIX IV.

THE BENGAL RELIEF OF INDEBTEDNESS BILL.

A

BILL

to provide for the relief of indebtedness and the improvement of agrarian conditions in Bengal.

WHEREAS it is expedient to relieve agriculturists from indebtedness and to improve the position of the agricultural population by helping them to settle their debts on fair terms ;

AND WHEREAS the previous sanction of the Governor-General required under section 80A(*3*) of the Government of India Act and the previous sanction of the Governor required under section 80C of the said Act have been obtained ;

It is hereby enacted as follows :—

Short title, extent and commencement.

1. (*1*) This Act may be called "The Bengal Relief of Indebtedness Act, 19 ."

(*2*) It extends to the whole of Bengal except the town of Calcutta as defined in the Calcutta Municipal Act, 1923.

(*3*) This Act shall come into force on such date and in such areas as the Local Government may, by notification, direct.

Interpretation clauses.

2. In this Act, unless there is anything repugnant in the subject or context,—

(*1*) The expressions "agriculture", "holding", "land", "tenant", "occupancy holding", "agricultural year", "landlord", "rent", and "village" shall have the meanings assigned to them in or under the Bengal Tenancy Act, 1885.

(*2*) "Loan" means a loan whether of money or in kind and includes any transaction which is in the opinion of the Board in substance a loan.

(*3*) "Debtor" means a person who owes a debt or debts, whose primary means of livelihood is agriculture.

(*4*) "Debt" includes all liabilities of a debtor in cash or in kind, secured or unsecured, payable under a decree or order of a Civil Court or otherwise, whether mature or not, but shall not include trading debts, arrears of wages, or any money for the recovery of which a suit is barred by limitation.

Explanation.—A debtor who temporarily ceases to earn his livelihood by agriculture or is prevented from so doing by reason of minority or sex or age, or bodily infirmity, does not by such cessation, or inability lose his status as a debtor, under this Act.

(*5*) " Prescribed " means prescribed by rules made under this Act.

(*6*) " Board " means a Debt Adjustment Board established under this Act.

(*7*) " Supplementary income " means any income derived by the debtor from any source other than by cultivation of land.

Setting of Debt Adjustment Boards.

3. (*1*) The Local Government may, for the purposes of settlement between creditors and debtors as defined in this Act, establish a Debt Adjustment Board for any area in Bengal to which this Act has been applied under section 1(*3*).

(*2*) Such Board shall consist of a Chairman and as many more members as the Local Government may appoint. The Local Government may, for reasons to be recorded in writing, cancel the appointment of any member or dissolve any Board.

(*2A*) After the dissolution of any Board, the Local Government shall have power to appoint an officer to exercise all or any of the powers conferred under this Act on a Board as may be determined and notified by the Local Government.

(*3*) The Chairman and every member of a Board so established shall be appointed for a term not exceeding three years, but shall be eligible for reappointment on the expiry of his term.

(*4*) The Local Government shall have powers to delegate its powers under this section to the Commissioner of a Division.

(*5*) The quorum of a Board shall be prescribed by the Local Government.

(*6*) Where the Chairman and members of a Board are not unanimous, the opinion of the majority shall prevail, and if the Board is equally divided, the Chairman shall exercise a casting vote.

Application for settlement between debtor and his creditor.

4. A debtor or any of his creditors may apply to the Board appointed for the area in which the residence or the major portion of the debtor's landed property is situate, to effect a settlement between the debtor and his creditors.

Verification of application.

5. Every application to a Board shall be in writing and be signed and verified by the applicant in the manner prescribed by the Code of Civil Procedure (Act V of 1908) for signing and verifying plaints.

Particulars to be stated in application.

6. (*1*) Every application presented by a debtor to a Board shall contain the following particulars, namely :—

(*a*) the village and union where he resides ;

(*b*) the particulars of all claims against him, together with the names and residences of his creditors ;

(*c*) the particulars and the original amount of each loan ;

(*d*) the particulars of all his property with the khatian numbers of his tenancies and the name or names of landlords, together with a specification of the value of such property and the place or places at which any such property is to be found ;

(*e*) the particulars of any supplementary income including loans or investments in which he has an interest ;

(*f*) the particulars of any mortgage or other encumbrances of his property.

(*2*) Every application presented by a creditor shall contain the following particulars, namely :—

(*a*) the village or villages where the debtor and the creditor reside ;

(*b*) the amount and full particulars of his claim against such debtor ;

(*c*) the particulars of debtor's properties together with khatian numbers of holdings and the name or names of landlords as also of any investment made by the debtor and of any mortgage of debtor's property, so far as are known to the applicant ;

(*d*) particulars about the debtor's supplementary income so far as may be known to him.

Procedure on receipt of application.

7. (*1*) On receipt of an application under section 6, the Board shall pass an order fixing a date and place for hearing the application :

Provided that the Board may at any time dismiss the application if, for reasons to be stated in writing, it does not consider it desirable or practicable to attempt to effect a settlement between the debtor and his creditors.

(*2*) Notices of the order under sub-section (*1*) shall be delivered to creditors and where the debtor is not the applicant notice of the order under sub-section (*1*) shall be delivered to him in such manner and in such form as may be prescribed in this behalf by the Local Government.

Attachment of debtor's property.

7A. At the time of making an order admitting an application under section 4 of this Act or at any subsequent time before final disposal under any of the provisions in the Act, notwithstanding anything contained in any enactment for the time being in force, the Board may, either of its own motion or on the application of any creditor, order the attachment of the whole or any part of the property in the possession or under the control of the debtor in his own right.

N.B.—The question was raised whether a clause similar to rules 58-61 of Order XXI of the Civil Procedure Code should be inserted here to provide for the summary adjudication of claims against the debtor, whose property was being attached. Section 19 might give the Board the necessary power to review its order of attachment on good cause being shown, but it was doubtful. If the words "in his own right" do not serve the desired purpose, it might be necessary to qualify possession as "legal" possession.

7B. Where an attachment has been made any private transfer or delivery of the property attached or any interest therein shall be void as against all claims enforcible under the attachment. **Private transfer or delivery of attached property void.**

7C. (*1*) Where the property is immovable, the attachment shall be made by an order prohibiting the debtor from transferring or charging the property in any way and all persons from taking any benefit from such transfer or charge. **Order of attachment and its publication.**

(*2*) The order shall be published in any manner the Local Government may prescribe.

8. (*1*) If, after examining the debtor or the creditor, the Board is of opinion that it is desirable to effect a settlement it shall deliver, send or publish in such manner as may be prescribed, a notice calling upon every creditor in case of an application under section 6, sub-section (*1*) or the debtor in case of an application under section 6, sub-section (*2*) to submit a statement as prescribed in section 6 and shall post a copy of the same in the Union Board office where the creditor or debtor as the case may be resides. Such statements should be submitted to the Board in writing within a month from the date of posting the copy in the Union Board office. **Notice calling upon debtor or creditors to submit statements of debts.**

In case of an application by a creditor under section 6(*2*), the Board shall in manner prescribed on receipt of the debtor's statement call upon his other creditors as disclosed from the statement to submit a statement as prescribed in section 6(*2*) :

Provided that, if the Board is satisfied that any creditor or the debtor was for good and sufficient cause, unable to comply with such directions within the time fixed, it may extend the period for the submission of his statement of the debts owed to or by him.

(*2*) Every debt, of which a statement is not submitted by a creditor to the Board in compliance with the provisions of sub-section (*1*) shall be deemed to be the amount as stated in the debtor's application subject to the provisions of sections 12, 14 or 14A.

9. Every creditor submitting in compliance with a notice issued under sub-section (*1*) of section 8 a statement as prescribed in sub-section (*2*) of section 6 shall furnish, along with such statement, full particulars of all such debts and shall at the same time produce all documents (including entries in books of account) on which he relies to support his claims, together with a true copy of every such document : **Procedure on submission of statement of debts.**

Provided that a decree or order of a Civil Court shall be conclusive evidence as to the amount of the debt to which the decree relates, but the amount may be reduced in accordance with the provisions of sections 12 (*1*), 14 and 14B.

(*2*) The Board shall, after marking for the purpose of identification every original document so produced and verifying the correctness of the copy, retain the copy and return the original to the creditor.

(*3*) If any document which is in the possession or under the control of the creditor is not produced by him as required by sub-section (*1*), the document shall not be admissible in evidence against the debtor in any suit by the creditor or by any person claiming under him.

(*4*) The Board shall disallow any debt which may be found to be collusive and set forth to defraud other creditors. The reasons for such finding shall be recorded in writing.

Board to attempt amicable settlement.

10. The Board shall call upon the debtor and each creditor to explain his case regarding each debt, and shall use its best endeavours to induce them to arrive at an amicable settlement.

Power of Board to require attendance of persons and production of documents and to receive evidence.

11. (*1*) Any Board empowered under this Act may exercise all such powers connected with the summoning and examining of parties and witnesses and with the production of documents as are conferred on Civil Courts by the Code of Civil Procedure, and every proceeding before the Board shall be deemed a judicial proceeding.

(*2*) Any person present may be required by a Board to give evidence or to produce any document then and there in his possession or power.

Power of the Board to dismiss application.

11A. If no award is made under sections 12, 14 or 14B, or if in the opinion of the Board any applicant fails to pursue his application with due diligence, the Board shall dismiss the application.

Award in case of amicable settlement of 60 per cent. of debts, its registration and effect.

12. (*1*) If the debtor and creditors to whom not less than sixty per cent. of the total amount of the debtor's debts are due come to an amicable settlement, the Board may, following the same principles to the extent it considers equitable, make a settlement of all the debts in writing in the form of an award recording the amounts payable to each creditor and the manner in which and the times at which they are to be paid and the rates of interest payable till the awarded amount is liquidated. Such award shall be read out and explained to the parties present, and shall be signed or otherwise authenticated by the Board.

(*2*) An award made under section 12(*1*) shall be registered in the office of the Board and the effects shall be the same as if it had been registered under the Indian Registration Act 1918, and it shall then take effect as it were a decree of the Civil Court.

13. (Omitted.)

Award in case of fair offer by any of the parties.

14. (*1*) If for any reason no settlement is made under section 12, but the Board is of opinion that the debtor or any of the creditors has made a fair offer, it may frame an award covering all the debts of such debtor following the principles of fair offers made by certain creditors as regards the dues of the remaining creditors. The award shall contain the same particulars regarding the amounts payable to each creditor and the manner in which and the time at which they are to be paid and the rates of interest payable till the awarded debts are liquidated as provided for in the preceding section.

(*2*) In no case under this section shall a loan be reduced to an amount less than the original principal, except with the consent of the particular creditor concerned.

Priority of secured debts.

14A. (*1*) Notwithstanding anything contained in this Act in all proceedings before a Board, it shall give priority to secured debts, and the mortgage or any lien on a debtor's property shall subsist till the whole of the amount, for which an award has been made in respect of such debt, has been duly discharged.

(*2*) All questions of priority between secured creditors shall be determined by the Board in accordance with the priority of the dates on which the instruments creating such securities were executed.

(*3*) The Board shall arrange the creditors in such order of priority as it thinks fit having regard to the date on which the debts were incurred, and other circumstances which the Board considers relevant and shall make an order for the allocation among the creditors according to their priority as determined and in proportion to the amounts shown against each and shall specify in each case the latest date upon which the instalment is to be paid commencing from the next agricultural year. The Board shall assign payment of the amount of each instalment as far as practicable to two or three creditors to avoid multiplicity of payments.

Recovery of sums due under award.

14AA. (*1*) If a debtor defaults in paying any amount due in accordance with the terms of an award registered under sub-section (*2*) of section 12, or under sub-section (*1*) of section 14, such amount shall be recoverable as a public demand on the application of the creditor made within ninety days from the date of default.

(*2*) Where the Collector fails to recover as a public demand any part of such amount, he shall certify that it is irrecoverable and thereupon the award shall cease to subsist.

(*3*) Where an award ceases to subsist, any amount which was payable under such award, but has not been paid shall be recoverable as if a decree of a Civil Court had then been passed for its payment.

List of landed properties of debtors to be circulated and published.

14AAA. (*1*) When an award has been made and registered, a list of the landed properties which are the security for the debt will be published by circulation to the landlords of the same and by affixing in the Union Board office.

Effect of sale on default.

(*2*) Notwithstanding anything contained in any enactment for the time being in force, if no objection to the title or possession of the debtor is filed before the Board within 12 months, or if an objection is filed and disallowed and no civil suit is filed against the decision within 3 months and subsequently the property is sold for default of the debtor to pay his due instalments, the property shall vest in the purchaser.

Adjustment of an insolvent's debt, and award for the same.

14B. Notwithstanding anything contained in the Provincial Insolvency Act, 1920, when a Board after consideration of a debtor's properties and income from other sources and all his debts records a finding that there is no prospect of the debtor being able to repay the whole of his debts even if instalments are spread over 20 years, the Board may reduce the debts with due regard to the value of the debtor's property and other income and fix instalments for the payment of the same according to the paying capacity of the debtor and make an award to such effect. The award shall be drawn up signed, authenticated and registered in the same manner and shall contain the same particulars as laid down in section 12. It shall have the same effect as an award under the same section.

Failure to pay instalment by an insolvent.

15. (*1*) When an award has been made under the foregoing section if the debtor fails to pay the instalments as fixed in the award and the Board does not think fit to grant extension of time for payment it shall be lawful for the Board to sell the property excluding only that area of land which is actually in use by the debtor for the purpose of his dwelling-house and owned by such debtor, in such manner and after such time as may be prescribed in this behalf by the Local Government.

(*2*) When all the assets of the debtor have been realised under sub-section (*1*), arrears of rent shall be a first charge; if there are any secured creditors the Board shall first pay to each secured creditor, the proceeds of any assets held as security up to the secured debt due to him as adjusted by the Board. Where the amount of such proceeds is insufficient to meet the total amount of such debt, the creditor shall rank in respect of the balance of such debt as an unsecured creditor. The remaining sale-proceeds will be distributed rateably.

(*3*) The Board shall then grant a certificate to the debtor discharging him from any further liabilities with respect to the debts so liquidated.

Application subject to approval of Registrar of Co-operative Credit Societies in case of a member of such societies.

16. Notwithstanding anything provided for in the preceding sections 12, 14 and 14B no application shall be entertained by the Board regarding any debtor who is a member of a Co-operative Credit Society without the previous approval in writing of the Registrar of Co-operative Societies.

Bar of civil suits.

17. (*1*) No Civil or Revenue Court shall entertain any suit or proceeding in respect of—

(*a*) any matter pending before a Board, or

(*b*) the validity of any procedure or the legality of any award under this Act, or

(*c*) the recovery of any debt dealt with in an award under section 12, 14, or 14B, unless the award has ceased to subsist, before the awarded debt has been paid, or

(*d*) any debt disallowed by the Board under section 9 (*4*).

(*2*) When an application has been made to a Board under section 4, any suit or other proceeding then pending before a Court in respect of any debt for the settlement of which application has been made shall be stayed, until the Board had dismissed the application or made an award. If an award has been made, the suit shall be struck off with permission to file a new suit, if the award ceases to subsist before the claim as adjusted by the Board is paid.

Bar to execution of a decree by Civil Court.

17A. Notwithstanding anything in the Code of Civil Procedure, no decree passed in any suit or proceeding against a debtor whose properties have been attached under section 7A, shall be executed, provided that—

(*i*) if the application under section 4 is dismissed, execution proceedings may proceed,

(*ii*) decrees for recovery of debts incurred after an award may be executed after all the claims dealt with in the award have been paid,

(*iii*) suits for recovery of arrears of rent may be executed after six months from the date of a notice of the decree being given to the Board,

(*iv*) decrees for recovery of debts incurred after an award has been made may be executed on 6 months' notice being given to the Board and on the Board giving a certificate that the loan was incurred for absolutely necessary or remunerative purposes such as the purchase of additional land.

Bar of appeal for revision.

18. The Local Government shall appoint one or more persons with judicial experience in each district where the provisions of this Act have been applied for the purpose of hearing appeals from the decisions of Boards constituted under this Act.

Power of Board to review its order.

19. A Board may, on the application from any person interested, review any order passed by it and pass such order in reference thereto as it thinks fit :

Provided that no order shall be reversed unless notice has been given to the persons interested to appear and be heard in support of such order.

Appearance of party before Board by agent, but not by legal practitioner.

20. In any proceedings under this Act any party may with the permission of the Board be represented by an agent authorised in writing, but not by a legal practitioner or by a tout declared as such by any competent Court or by the Board.

21. (Omitted.)

22. A copy of an award under section 12 or section 14 or an order under section 14C made by a Board shall be published in such manner as may be prescribed by the Local Government.

Members of Boards deemed to be public servants.

22A. The members of a Board shall be deemed to be public servants within the meaning of the Indian Penal Code.

Allowance of time for limitation.

22B. In calculating the period of limitation for any suit filed in or proceeding before a Civil Court for the recovery of a debt which was the subject of any proceedings under this Act, the time during which such proceedings had continued shall be excluded.

Transfer of the amount of debt in an award or a certificate or an order of adjustment to approved credit organisation.

23. (*1*) An award made under this Act shall be negotiable and may be transferred by a creditor to any approved credit organisation as may be prescribed by the Local Government under such terms and conditions as may be prescribed.

(*2*) Notwithstanding anything contained in an award in case of such transfer the debtor shall be liable to pay the amount as shown in the award under such terms and conditions as may be determined by such approved credit institutions and agreed to by the debtor.

Power to make rules.

24. The Local Government may make any rules consistent with this Act to carry out the purposes thereof, and in particular and without prejudice to the generality of the foregoing power may make rules—

(*a*) prescribing the maximum amount of debt which can be dealt with under the provisions of this Act ;

(*b*) prescribing the quorum for and regulating the procedure before a Board ;

(*c*) prescribing the forms of application under section 6 ;

(*d*) prescribing the charges to be made by a Board for anything done under this Act and the persons by whom and the manner in which such charges shall be paid ;

(*e*) prescribing the records to be kept and the returns to be made by a Board ;

(*f*) prescribing the allowance to be paid to members of a Board ;

(*g*) prescribing the place at which and the manner in which an award shall be registered under sub-sections (*2*) of section 12 or 14 or 14B ;

(*h*) prescribing the forms of award to be made under sub-section (*2*) of section 12, sub-section (*1*) of section 14 or of the order of adjustment under section 14B ;

(*i*) prescribing the manner of transfer of an award or for an order of adjustment and the payment of the amounts covered by such award or certificate or an order of adjustment by any approved credit organisation to a creditor transferring it ;

(*j*) prescribing the procedure for sale of properties of an insolvent declared under this Act, the manner of distribution of sale-proceeds and the form of certificate of discharge to be granted to an insolvent under sub-section (*3*) of section 16 ;

(*k*) prescribing the method of serving or publishing the notices prescribed by any section of this Act ;

(*l*) prescribing the procedure to be followed by the Appellate Courts appointed under section 18.

Penalty for breach of rules.

25. In making any rule the Local Government may direct that a breach thereof shall be punishable with fine which may extend to fifty rupees and, where the breach is a continuing one, with further fine which may extend to ten rupees for every day after the first during which the breach continues.

APPENDIX V.

Extract from Notes on Economic Enquiry in the Rangpur District by the Settlement Department.

An enquiry was made of the economic condition in 11 villages of 508 families with 3,272 persons giving an average of 6·4 persons per family.

The classification of families according to standard of living is difficult and there was no uniformity. However from the figures as they stand one-ninth of the villagers are living in starvation, *i.e.*, they have just sufficient to keep themselves alive and no more or of whom it can be said that there is definite evidence of under-feeding or real lack of clothing. This probably represents a fairly pessimistic view of the standard of the country. Against this, between one-third and one-quarter of the families representing one-third of the persons can on any view be described as in comfort.

Those who have less than 1 acre of khas land may be styled landless. They can have little land besides their homesteads. They amount to a quarter of families and a little less than one-fifth of the individuals.

The compilation of figures shows that 29 per cent. of the families are free from debt. This is a more serious condition of indebtedness than that found in Faridpur by Mr. Jack. In that district about 1906-10, 55 per cent. of families of cultivators and 59 per cent. of all families were found to be free from debt.

Debt in some measure is determined by credit. The fact that in every village except one the proportion of families free of debt exceeds the proportion of individuals show that the "free of debt" class contains more than a proportionate share of small families while although the landless class form only one-quarter of the total families they form three-eighths of the families free of debt. Only four out of the twenty-six big family groups possessing 10 or more acres of khas land are free of debt.

Any opinions as to why indebtedness is now more widespread in south-east Rangpur than it was in Faridpur 25 years ago, must necessarily be based on mere speculation. One may surmise that the present enquiry took place at a time when debt was very prevalent. A period of high prices has been followed by three or four years of low prices; prices of jute and paddy being only a third of what they were five or six years ago. Before cultivators adapted themselves to the new low level of prices they certainly took recourse to loans to maintain their expenditure and in the first two years of falling prices there was still ample cash in the hand of money-lenders, available for lending.

The total debt is really an artificial figure. Villagers were asked what loans they had taken. Then after learning the rate of interest and the amount said to have been repaid, the present value of the debt was worked out by simple arithmetic. By this method, a sum of Rs. 40 borrowed in 1928 at 48 per cent. per annum and Rs. 25 repaid, is calculated at Rs. 130, and Rs. 50 borrowed in 1928 at 37½ per cent., and Rs. 18 repaid, as Rs. 143. These rates of interest, which ordinarily vary from 3 per cent. per month to 1 anna in the rupee per month (36 per cent. to 75 per cent. per annum) can only be regarded as nominal. It is unlikely that any Court would decree such

sums as are due according to the strict letter of the bonds, and Mahajans certainly compound with their debtors for much smaller sums. The original principal of outstanding loans was Rs. 66,000; while even after deducting sums repaid the present nominal value is Rs. 1,10,000. Probably the effective debt—what the money-lenders reasonably expect to receive—is not much more than half this sum.

One small matter calls for note. When calculating the present value of debts, the outstanding value of complete usufructuary mortgages was calculated at a share of the capital sum borrowed, proportionate to the outstanding period of the mortgage. Thus if Rs. 50 was borrowed on complete usufructuary mortgage for ten years from 1336 to 1345, the present value was shown as Rs. 25, *i.e.*, $5/10 \times 50$.

Causes of debt.—Circle Officers were asked to find out the reason for borrowing each loan. It is well known that many loans, or rather acknowledgments of debts, are not new money, but only renewal of old loans. Officers were asked to discover the causes of the original loan; and this instruction was usually followed. For loans totalling about one-eight of the present value, no cause was given, or the reason was "to pay off old loans." Of the rest, more than a third is described as incurred for purchase of food, clothing or household expenses. More than a fifth is said to have been borrowed because of marriages. Purchase of land or payment of nazar, and purchase of cattle are the next largest classes of debt and these four groups together account for four-fifths of the total debt. Immediately, the query arises, "can we trust the villagers' own statements about the reason for borrowing?" It is not possible to obtain any evidence to check their statements and it can only be said that at any rate they have given consistent statements about the cause of debt to five different officers. The biggest cause of debt "food, clothing, and household expenses" calls for comment. One Circle Officer thinks that this is a reason for borrowing, which does not occasion any shame; and such debts are mentioned freely, where others may be concealed. But such borrowing is bound up with the agricultural system of the area. This is a paddy importing area. Jute is sold, and articles purchased when there is cash in hand. Paddy, however, is bought on credit throughout the year, and if the cultivator has not the cash to pay off the debt, he takes the easy course of executing a hand-note. This is another reason for believing that much of the rural debt, although expressed in cash values, is not really borrowing in cash. It is also likely that the sums so borrowed by account with mahajans include some loans taken for other purposes, such as payment for rent. But it is not suggested that all the borrowing is in kind; and for reasons given later, it seems likely that at any rate before the slump, or in the early days of falling prices, there was considerable cash borrowing. Articles such as oil, dal, and clothes have to be bought for cash down. In days of prosperity, much of the expenditure on these must have been done with borrowed money. Figures show how frequently marriage ceremonies occasion debt, and also that litigation considered in relation to the country as a whole is of no particular importance as a cause of debt, though individual families may be ruined by litigation. In all, only 38 families out of 508 which formed the subject of the enquiry, said they had ever incurred any expenditure for litigation. Seventeen of the 38 lived in the two villages which were nearest to Gaibandha.

Of the outstanding debts, the greater part was borrowed in the three years 1928, 1929 and 1930. Since then the amount of borrowing has slackened off. The villagers were asked to give their debts. They naturally described the debt as it stands after the last hand-note executed, or after the latest composition with their creditors. It is never possible to distinguish how much debt is new money and how much is in satisfaction of existing debts by execution of fresh hand-notes, but from what is known of the amount of money available in different years it is reasonable to assume that many of the loans taken between 1928 and 1931 were new money. Loans incurred before 1928 seem to have been nearly all satisfied, and since 1931 there has been little borrowing. The debt which must now be settled is that incurred in the period 1928 to 1931. This is not likely to be liquidated by fresh borrowing from the mahajans and rural banks which were the main sources of credit in the past. Leaving aside the possibility of any large scale debt relief under Government auspices, it is probable that creditors will compound the debts on terms which are fair and equitable to both parties. Signs are not wanting that this is actually being done. A fair proportion of the loans which were stated to have incurred in 1934 are known to be compoundings of previous debts,—commonly on the "Kistibandi" principle. In a "Kistibandi" settlement the debt is fixed at a certain sum which is to be paid off in so many instalments without further interest. This indeed, is not always a method of settling loans; sometimes a new loan is given on terms that it will be paid off in instalments. There is no provision for interest, but the sum mentioned in the bond is greatly in excess of the actual sum borrowed. However Rs. 3,411 out of the Rs. 4,521 said to have been borrowed in 1934, is fairly certainly settlement of old loans.

The Rent-situation.—Figures average out at 2½ years' rent in arrears at the end of 1340 (rents for 1340, if unpaid were classed as arrears). But it must not be understood that no rent has been paid for the last 2½ years. These are arrears which have accumulated gradually, and rent is still paid in part.

Again, it is certain that many cultivators are even, in the best of times, in arrears with their rent. During field work, or attestation one commonly finds receipts given in 1335 for rent due in 1333 or even earlier, and this at a time when the prices of agricultural produce were the highest ever recorded.

In mouza Manmanthapur the sum nominally payable on debts was Rs. 1,097, but only Rs. 200 were paid in 1340 B.S. In Kachua, out of Rs. 2,379 due, only Rs. 154 is reported to have been paid. This shows that if the sums payable on debts according to the stipulation in the bonds were actually paid, cultivators would pay more to mahajans in interest, than they pay to their landlords in rent. Actually, they are now paying their landlords much more than they are paying their mahajans.

Family budgets.—Figures given for family budgets must be accepted with caution. Compilation is beset with traps for the unwary, but all officers worked on the same principle. They endeavoured to find out the family consumption of rice, and then entered the value, in current prices, of the paddy equivalent. Dal, mustard oil, spices, salt, tobacco, clothing and kerosine are normally bought for cash. Here the usual, and safest method of proceeding was to find out how much was spent

at every hat, and then to multiply until the annual expenditure was found. This method lends itself to magnifying every error, but produced notably consistent results by the different officers. For fish, meat, vegetables, milk and betel nuts it was tried to proceed on the principle of asking how much was bought at every hat, and for how many months. Then it was tried to find out how much was obtained by own production, or how much fish was caught by the family, and then was assigned a value to the quantity, adopting current market prices. This may not be strictly accurate, but is the best possible. In Faridpur Mr. Jack thought it impossible to give a cash value to the fish caught and consumed by the family. The officers have done the best they could by asking what would have been the price of the fish if bought; or for how many months in the year fish was bought and then giving a proportionate value to the fish caught.

The importance of rice in the cultivators' diet is apparent. The cash value of rice consumed is everywhere (except one mouza) given at from two-thirds to three quarters of the cash value of the total food stuffs consumed.

Excepting rice, the expenditure on other items of recurring expenditure, clothing is evidently the biggest item. Tax has been shown as a recurring charge as even now unlike rent and interest it is paid regularly. If in any village there is much unpaid or irregular payment the cause will certainly be not economic difficulty, but slackness among the collecting authorities. At an average of 4 annas per head per year, the Union Board rate only amounts to about "1/64" to "1/80" of the expenditure on food.

The article which shows the most consistent level of consumption is salt. The consumption works out at 9 or 10 kutcha seers per head per year (including salt for cattle). The demand is completely inelastic.

No figures have been given for item of "spasmodic" expenditure, such as cost of births, marriages and deaths, and cost of house building and repairs. The Faridpur method was followed, when averaging these costs to one year. It was assumed that one birth, one marriage and one death would occur to every member of the family in 30 years, and the aggregate cost of one of each class of ceremony for each member was divided by 30 to give an annual figure. The method cannot be vouchsafed to be actuarially sound; but it was peculiarly liable to error in the circumstances of the present, when standards of expenditure have fallen heavily in the last 5 years. People are at best vague when giving the cost of a wedding. Some may give the amount which they would like to spend or think ought to be spent, and others are guided by their ideas of what was spent in the last wedding in the family. This may have been 5 years ago, when there was much more money available.

Similarly no total of "income" or expenditure has been given. Figures show a consistent excess of expenditure over income; even if allowance be made for non-payment of the rent and interest which is due according to the record-of-rights and the terms of bonds.

It is believed that villagers consistently tend to underestimate their income and some of the richer may for "prestige" exaggerate their expenditure.

Note for the Statistical Sub-Committee by the Secretary to the Board of Economic Enquiry.

Regarding the problem of rural indebtedness, Government have referred under paragraph 4 (*i*) of Resolution No. 6159-Com., dated the 1st December 1933, concrete suggestions in broad outlines for conducting enquiries by the Board of Economic Enquiry in the Note for the Board, which has been circulated.

These are—

(1) Prevention of extravagance in new borrowing.

(2) The liquidation of existing debt by—

(*a*) Debt conciliation on voluntary basis of debts up to Rs. 1,000.

(*b*) Compulsory adjustment of accumulated interest.

(*c*) Rural Insolvency Act.

(3) Reorganisation and expansion of co-operative societies including land mortgage banks on paper lines, and setting up of other approved credit institutions to take over adjusted debts.

It has been pointed out that the schemes suggested above will depend entirely on two essential features, viz.,—

(*a*) Existence of sufficient surplus to pay off the adjusted debt.

(*b*) Existence of co-operative banks, or other approved credit institutions to take over the adjusted debt.

The Sub-Committee is concerned with enquiry under (*a*).

Statistical Registers, Reports and Lists containing general information.

There are registers in each district office based on the Revenue Survey in the middle of the last century showing the villages under each pargana and the area appertaining to each separate estate within the village as also the villages or portions of them appertaining to each estate, the area of each estate lying within each village, the land revenue for each estate. In the Land Revenue Administration Reports published annually by the Government the total number of estates permanently and temporarily settled and also under direct management in each district, the land revenue and road and public works cess payable, the amounts paid, the amount of arrears, the prices fetched at public auction and various other information is given. The reports on the management of the Court of Wards also published annually give the rentals, collections and arrears, debts and repayment of each estate under its management. The Annual Report of the working of Co-operative Societies in Bengal gives information regarding (1) number of societies, (2) number of members, (3) amount of loans, (4) loans due by individuals, (5) overdues and (6) repayment by members and other details.

Various laws have been passed for codifying the rights and status of cultivators, the latest amendment of the Bengal Tenancy Act gives them right to transfer their lands without the consent of landlords. The provisions for enhancements of rents of cultivators are mainly on the basis of higher rates prevailing for similar lands in the neighbourhood

and in consideration of the rise in prices of the staple food during the currency of the present rent. For the investigation of the latter by Courts a Statutory Price List of Staple Food-crops in the Local Areas of Bengal is published quarterly and an annual compilation made therefrom by Government in the Revenue Department under section 39 of the Bengal Tenancy Act. This is only for "rice" which is the staple food-crop of Bengal.

The Director of Agriculture publishes weekly with the Weather and Crop Reports the price of common rice for the subdivisional stations of districts. He also publishes a fortnightly Prices Current (retail) of common rice and salt in some specified marts of every district. A fortnightly Prices Current (wholesale) is also published by him of some important marts in the Presidency of the prices of paddy (unhusked rice)—best and common, rice—best and common, wheat, raw cotton, coal, raw jute, and gur (sugarcane). All these prices are published in the Government *Calcutta Gazette*. The Season and Crop Report gives the harvest prices of the following crops for each district, viz., winter and autumn rice, wheat, barley, gram, gur (unrefined), cotton, linseed, rope and mustard, jute and tobacco leaf.

The agency employed for the collection of statistics is the same for both departments, who are responsible local officers. Their duty requires them to visit every mart personally and ascertain the information from respectable shopkeepers.

To safeguard the interests especially of cultivators, who generally hold no leases for their lands, a record-of-rights, district by district, was undertaken to be prepared by Government since 1900 and these will be completed within the next 3 or 4 years. The record-of-rights involves a survey and enquiry of each plot of land, preparation of a record showing the fields appertaining to each tenancy, the classification of land of each plot, the rent paid to the landlord, the rights under which the tenancy is held and other details of the tenancy. Similar record is prepared for every tenure-holder under a proprietor and for the proprietor as well, thus giving a comprehensive record of all interested in land. During the course of preparation of record-of-rights of a district various items of statistical information have been collected, for the district as a whole.

These are mainly (1) the different classifications of lands and the area under each, (2) the area under different crops, (3) the statistics of land tenure, i.e., the distribution of land under different classes of owners, the incidence of rent and cess, (4) Agricultural stock statement showing the number of ploughs, carts, boats, etc., and the live-stock.

Report and Enquiries regarding economic position with special reference to indebtedness.

In some of the earlier operations, detailed statistics have been collected regarding the economic condition of the people of the districts —the most detailed of these is that of Faridpur the main results of which have been collected in Major Jack's book "Economic Life of a Bengal District." Most of the original statistical forms and the detailed tabulation from which the tables in the book have been compiled covering over one hundred volumes are in the Record-room of the Faridpur Collectorate. Detailed enquiries regarding indebtedness were

also made in Dacca and Jessore districts. Settlement Reports of Dacca, Mymensingh, Midnapore and Jessore of the three districts of East, West and Central Bengal will show the estimate of the economic position by the Settlement Officers. Crop-cutting experiments were conducted by officers for ascertaining the yield and the results further verified by reliable enquiries from cultivators themselves. Typical family budgets of cultivators were also prepared in course of preparation of record-of-rights. All these informations have been incorporated in the Final Reports of Settlement Operations of districts. It is not possible to enumerate the different heads of subjects dealt with in these reports, which are all printed. At present the Final Reports of following districts with years of operation are available:—

(1) Bakarganj (1900-08),
(2) Faridpur (1904-14),
(3) Dacca (1910-17),
(4) Mymensingh (1908-19),
(5) Midnapur (1911-17),
(6) Bankura (1917-24),
(7) Noakhali (1914-19),
(8) Tippera (1915-19),
(9) Jalpaiguri (1906-16),
(10) Rajshahi (1912-22),
(11) Pabna (1920-29),
(12) Bogra (1920-29),
(13) Nadia (1918-26),
(14) Jessore (1920-24) and
(15) Khulna (1920-26).

The Settlement Reports of Murshidabad, Birbhum and Chittagong are under preparation and that of the 24-Parganas has not yet been published. Settlement Operations are in progress in the districts of Burdwan, Malda, Hooghly and Rangpur and Dinajpur and Howrah will be taken up next year.

Information regarding economic position has been collected from time to time.

In 1926, Mr. Burrows, the then Collector of Faridpur, made an intensive enquiry of a village in Faridpur district at the instance of the Royal Commission on Agriculture. An extract from his report regarding indebtedness is appended to the Report of the Commission.

The Bengal Banking Enquiry Committee had an intensive enquiry in 1929 through non-official and official agencies about the economic position of agriculturists, in selected areas of certain districts. The forms filled in by the enquirers are available. Apparently the Committee did not make much use of the results as they "suffered somewhat in precision and thoroughness." The results of the intensive enquiry in one village Karimpur of the Bogra district have been utilised in the Report of the Committee.

An enquiry was made by the Collectors in November of 1933 and March of 1934 regarding the stocks of crops held by cultivators and generally into their economic position.

The latest enquiry on a detailed basis have been called for in Form No. 1 and No. 2 which were circulated to all the members of the Board at the first meeting. It has been arranged that for the 25 plains districts in Bengal, there will be enquiries made in about 200 villages. The enquiry will be limited to the families of persons paying fixed rents or having rights of occupancy in land as these classes of people form the major portion of the agricultural population and also they have good security to offer on which mortgaged loans may be given.

It will be for the Sub-Committee to consider which of the information contained in statistical Registers, Reports, Lists and Forms may be utilised directly or indirectly for the purposes of their enquiries regarding the proportion of cultivators with the requisite margin. The Sub-Committee may indicate the lines on which any of these should be tabulated and collated and devise the form for such tabulation and collation. If, however, the available materials are found to be insufficient to form an estimate of the proportion referred to in the Government Note, the Sub-Committee may indicate if further investigations are necessary. Also if the materials available will not serve the purpose of arriving at the required estimate, it may suggest in what other form information should be collected and the agency for conducting the enquiry.

Note for the Sub-Committee to investigate the possibility of debt conciliation and liquidation amongst agricultural population (by the Secretary, Board of Economic Enquiry).

The object of this note is to summarise the legislations and the administrative measures introduced from time to time for dealing with indebtedness in general, and of agriculturists in particular. The executive measures undertaken have also been dealt with. Their defects and shortcomings have been prominently brought forward in paragraphs 12 to 19 with a view that the Sub-Committee may, in devising legislative and executive measures for dealing with the question, advise as to the means by which they can be avoided or rectified.

(A) General Legislations.

I.—*History and legislation regarding Money-lending.*

2. *Rule of Damdupat.*—According to Hindu Law, the rule of damdupat is that the interest exceeding the amount of the principal cannot be recovered *at a time*, though the total amount paid from time to time may far exceed the capital. This rule of law is not now applied to the whole of India. It is applied to the Presidency of Bombay, the Provinces of Berar and Sindh, Santal Parganas and the portion of the City of Calcutta within the jurisdiction of the Original Side of the High Court. But it does not apply to the Presidency of Bengal outside the area mentioned above. This rule is not applicable in Madras.

The rule of damdupat only exists so long as the relationship of debtor and creditor exists but not when the contractual relation has come to an end by reason of a decree.

The principle of damdupat is not applicable to a decree for puisne mortgage nor to interest accruing after the institution of the suit. The interest on arrears may be capitalised by subsequent agreement, but prospective interest cannot be capitalised. The rule of damdupat is not affected by the Transfer of Property Act and the Indian Contract Act or the Acts relating to interests.

But it is so restricted that there is no limit to the amount of interest if the interest be paid in smaller sum than the principal. In this view, a judicial officer urged before the Provincial Banking Enquiry Committee that the rule to be really effective a creditor shall never be able to receive more than double the amount advanced and it should be made a Statutory Act (*vide* Replies to Special Questionnaires at page 27 of the Bengal Provincial Banking Enquiry Committee's Report, Volume III—Evidence).

The rule of damdupat was accepted in principle in enacting the Bengal Money-lenders' Act, 1933. In section 4 it is enacted that in case of loan prior to the commencement of the Act, the Court shall limit the amount of arrears of interest to the amount of principal unless there be satisfactory reasons for not enforcing the claim earlier. Section 6 of the Act, which comes into force throughout the Presidency from the first of July 1934, enacts that no Court shall, in respect of any loan made after the commencement of the Act decree on account of arrears of interest a sum greater than the principal of the loan and an amendment to insert "together with interest already paid" was rejected.

3. *Rule for adjustment of debt in 1772.*—Even at the beginning of the British Rule we find that prevalent usury in the province caused concern to the administrators. On taking over the administration of the province, Warren Hastings saw its evil effects and in 1772 the Committee of Circuit framed the following rule regarding adjustment of debts and rates of interest:—

"That in adjusting the claims of old debts it shall be observed as a rule that they bear no further interest after such adjustment but that the amount shall be payable by *kistibundee* (instalment) according to the circumstances of the party, and as the rates of interest hitherto authorised by custom have amounted to the most exorbitant usury, the following rates are now established to be received and paid as well for past debts as on future loans of money, viz., on sums not exceeding 100 rupees principal, an interest of 3 rupees 2 annas per cent. per mensem or ½ anna in the rupee. On sums above 100 rupees principal, an interest of 2 rupees per cent. per mensem. The principal and interest to be discharged according to the conditions of the bond and all compound interest arising from an intermediate adjustment of accounts to be deemed unlawful and prohibited; when a debt is sued for upon a bond which shall be found to specify a higher rate of interest than the established rates, the interest shall be wholly forfeited to the debtor and the principal only recoverable; and that all attempts to elude the law by deductions from the original loan under whatever denomination shall be punished by a forfeiture of one moity of the amount of the bond to the Government and the other half to the debtor."

4. *Regulating Act of 1774.*—By a Regulating Act of 1774 (13 Geo. Ch. 63), the maximum rate of interest as applicable to European British subjects in India was fixed at 12 per cent.

5. *Bengal Regulation of 1780.*—The rates of interest were reduced to twelve per cent. and twenty-four per cent. by a regulation of 1780. The regulation fixed the rate of interest irrespective of stipulation of higher or lesser rates of interest. The full advantage of the regulation for the purpose of adjustment of debts was, however, only taken by land-owners who prayed for adjustment and we find British officers deputed in the district of Mymensingh to adjust debts between zemindars and money-lending Sannyasis. One noticeable point in these adjustments is the simplicity of procedure by which they were arrived at. The officers called for accounts from both parties and after hearing them and examining the papers produced, recorded their decisions in a tabular statement showing the claims of the creditor and debtors and the decision which was a decree.

The compulsory adjustments were, however, only of the interest in cases where it exceeded the rate laid down in the Regulation. The Regulation was embodied in one of the series of Regulations passed in 1793.

6. *Act XXVIII of 1855.*—The laws against usury were repealed in England in the middle of the nineteenth century and following its wake the usury laws in India were repealed in 1855 by Act XXVIII of 1855. The law of damdupat remained in force in the localities mentioned before.

7. *Indian Contract (Amendment) Act of 1879.*—Subsequently, however, the unrestricted usury attracted the attention of Government. By the Indian Contract (Amendment) Act of 1899, the courts could give relief to debtors in cases of unconscionable bargains on proof of undue influence or where the bargain was by way of penalty.

8. *Usurious Loans Act of 1918.*—The Usurious Loans Act of 1918 empowered a court, where there is reasonable ground to believe that the rate of interest was excessive and the transaction was substantially unfair, to reopen the transaction and relieve the debtor of excessive interest even though there is an agreement to close previous dealings and open a new account.

9. *Usurious Loans (Amendment) Act of 1926.*—The Usurious Loans (Amendment) Act of 1926 empowered suits by debtors and for redemption of securities. The period of limitation was extended to twelve years. These are the all-India legislations directed against usury.

(B) Provincial Legislation.

10. Provincial Legislations against usury and regularisation of money-lending are summarised below:—

(1) *The Punjab Regulation of Accounts Act, 1930.*—It prescribes the keeping of accounts by creditors and the supply of statements of these accounts every six months to individual debtors.

(2) *The Bengal Money-lenders' Act, 1933.*—The Act applies the rule of damdupat as stated before. It lays down that rates of interest above 15 per cent. in case of secured loans and 25 per cent. in case of unsecured loans or where there is a stipulation of rest at intervals of less than six months are to be presumed to be excessive under Usurious Loans Act. It prohibits the recovery of compound interest at rate of more than 10 per cent. This Act enables the debtor to obtain full particulars of his debt from his creditor.

(3) *The Usurious Loans Central Provinces (Amendment) Act, 1931.*—It follows the Bengal Act.—It lays down that where the rate of interest is more than 18 per cent. in cases of unsecured loan or more than 12 per cent. in case of secured loans or where there is a stipulation for rests at intervals of less than six months the rate of interest may be deemed to be excessive. The rate for future loans has been put at 10 per cent.

(4) *The Assam Money-lenders' Act of 1934.*—The Assam Money-lenders' Act of 1934 has been recently passed. It is on the lines of the Bengal Act but the rates of interest have been reduced.

Similar provincial legislations are in contemplation in the Central Provinces, Bombay and the Punjab.

(C) Special Legislation for Agriculturists.

11. Special Legislations have also been undertaken from time to time in other provinces to protect agriculturists. The most important of these are the Deccan Agriculturists' Relief Act of 1879 and the Punjab Land Alienation Act of 1900.

The Deccan Agriculturists' Relief Act of 1879.—As to the working and amendments of the former, a reference is invited to Enclosure A which contains extracts from the Report of the Royal Commission on Agriculture.

The following extract from the report of the Committee appointed by the Bombay Government in 1920, to consider the repeal of the Deccan Agriculturists' Relief Act is interesting:—

"It must be acknowledged that since 1912 the economic condition of agriculturists as a class has much improved and it promises to improve still more as the country advances in industrial development. We think, therefore, that the time has come for bringing agriculturists under the provisions of the law which apply to other classes."

12. *The Punjab Land Alienation Act of 1900.*—The Punjab Land Alienation Act of 1900 came into force in 1901. Its main object was to prevent the small peasant proprietor being expropriated by the village money-lender. By it the non-agriculturists classes have been greatly restricted in the acquisition of land, they are not allowed to buy land from a member of the agriculturist tribe nor may they take it in mortgage from the latter for more than twenty years. At the end of the period the mortgage automatically lapses without payment and so the nominal value of a debt secured by mortgage varies with the age of the mortgage. Mr. Darling remarks that there is general agreement that this form of mortgage is disliked by all but the idler cultivators as it involves parting with land for a long period and debars an owner from taking advantage of the rising value of land to redeem a portion of it in a year or two. But it has given opportunity to agriculturist money-lender. The *Sahukar* deprived by the Act of the security of the land can only lend up to the limit of what can be repaid from the produce; but the agriculturist money-lender to whom the Act does not apply can afford to lend up to the value of the land. The latter is therefore in a stronger position of the two; and ultimately he is the more formidable for his object is the land and to obtain it he will press his client till he is compelled to sell. On the other hand the *Sahukar* depending solely on the produce hesitates to drive a client to extremes lest he should give up producing. At first after the passing of the Act, there was restriction of loan and consequent decrease of debt (from

Rs. 16 crores to Rs. 9 crores decades 1893-1902 to 1903-12) but with advance in prices and owing to the growth of agriculturist money-lenders the situation adjusted itself and the debt rose to Rs. 30 crores in the decade 1913-22. Thus "with the tendency of all protective legislations to defeat its own object, the Act fostered the growth of the agriculturists money-lender and borrowing soon became easy as ever."

13. *Restriction of transfer of land under Chapter VIIA of the Bengal Tenancy Act.*—Restriction against lease or transfer of land by aboriginal tribes as contemplated in Chapter VIIA of the Bengal Tenancy Act was enacted in 1918 but it affords no real protection. The evasion is effected by the aboriginal leaving the land under pressure of the money-lender and executing a deed of relinquishment in favour of the landlord and then the money-lender or the intending purchaser gets settlement from the landlords. So in the end the value which could have been secured by open sale is not obtained. In Malda, the application of the Chapter amongst the Santals and the Oraons has failed because to save distraint of their crops on account of debts, the Collector had to agree to usufructuary mortgages.

14. *The United Provinces Agriculturists' Relief Act, 1934.*—The United Provinces Agriculturists' Relief Bill, 1934, has been passed by the Legislative Council but has not yet received the assent of His Excellency the Governor. Its main provisions are:—

(*i*) To empower courts when passing decrees against agriculturists to fix instalments payable on fixed dates which may extend over a period of four years in the case of small agriculturists and over twenty years in other cases

(*ii*) To limit the rate of interest admissible after a decree has been passed to 2 per cent. in certain cases and 3 per cent. in other cases.

(*iii*) To empower courts to fix instalments even in cases in which decrees have been passed before the passage of the Bill.

(*iv*) To restrict mortgages with possession made after the passage of the Bill to mortgages which give possession with the right to all the profits of the land for a fixed period not exceeding twenty years on the condition that that period of possession will satisfy the debt.

(*v*) To facilitate the redemption of mortgages.

(*vi*) To limit the rates of interest on loans taken after the passage of the Bill to rates notified by the local Government as the prevailing rates. The rates to be so notified will be based on, though they will exceed, the rate at which of the local Government of India.

(*vii*) To limit the rates of interest recoverable on loans taken since 1st January 1917.

(*viii*) To prescribe rates of interest recoverable on loans after a sum equal to 100 per cent. of the principal in the case of secured loans and 150 per cent. in the case of unsecured loans has been realised or has accrued as interest.

(*ix*) To empower courts to reopen decrees passed on loans incurred since 1st January 1917, and to pass amended decrees for the amount payable if the interest were limited as in (*viii*) above.

(*x*) To require creditors to maintain a correct account for each agriculturist debtor for each loan separately and to supply the debtor annually with a statement of such account.

15. As has been stated in paragraph 2 of the Government Note, these legislations cannot afford a complete solution of the problem of rural indebtedness, although they should relieve some of the worst evils of uncontrolled usury.

Paragraph 4 of the Government Note regarding prevention of extravagance in new borrowing is for prohibition by legislation, recovery of any charges in regard to new debts by the legal process of the sale of the land and crops belonging to the debtor. But the provisions of such restrictions are not to apply to new loans granted by Co-operative Credit Societies, Land Mortgage Banks and other approved organisations. It is presumed that the principle underlying the suggestion is that while restrictions are to be imposed on new loans from outsiders, the credit of cultivators which has been enlarged greatly by the transferability of holdings is not to be decreased in any way and they will be able to take loans for legitimate and necessary purposes from approved credit organisations at fair rates of interest. It is the restriction of improvident borrowing from unscrupulous money-lenders which is to be aimed at by legislation.

16. Inculcation of the principles of thrift by co-operative organisations had not any marked effect on the members of the Rural Co-operative Societies as will be seen from the following summary of replies of some of the Central Co-operative Banks regarding their constituent rural societies.

In the case of Khulna Central Co-operative Bank, 'as regards the total amount of indebtedness of the members of the rural societies whereas the outside debt had been reduced, the total indebtedness has not been reduced.' This is said to be due to the fact that 'the landed properties on the whole have been increased.' But at the same it is remarked that although the Central Bank does not allow members of affiliated societies to raise loans from outside they do it surreptitiously.

The Nalhati Central Bank reported that all debts of 41 rural societies were paid off by Central Bank in different periods, but a regrettable feature was that all of these societies had incurred debt again.

The Dacca Central Bank reported to have reduced the debts of 6,685 individual members of rural societies to outside creditors from Rs. 7,65,299 to Rs. 4,91,894. The Comilla Central Bank reported to have minimised borrowing by members.

It is for the Sub-Committee to consider on what lines legislation should be undertaken—either by the amendment of present legislation or by new legislation—for restriction of new borrowing generally or supplementary to any legislation for debt adjustment.

II.—*Debt Conciliation on a voluntary basis.*

17. In paragraph 6 of the Government Note, debt conciliation on voluntary basis has been dealt with. The operation hitherto undertaken in the different provinces has been like ordinary arbitration except that it is carried on by Government officials; the proceedings have no support or authority from any legislative enactment. An account of such operations in the Central Provinces is given in the Indian Banking Enquiry Committee's Report. It will be seen that creditors often repented of their generosity but probably owing to Government officers making the settlement did not resile from the settlement.

18. *Settlement with money-lenders by the Co-operative Department.*—An interesting note on "Settlement with Mahajans" in the Pabna district is given in the Bengal Co-operative Journal, 1919. The principal was Rs. 13,406-5-9, interest Rs. 12,152-11-9, total Rs. 25,559-1-6. By settlement the creditors accepted Rs. 10,136 in cash, Rs. 5,658-15-6 to be paid by instalment. The writer remarked:— "The co-operative worker finds the Mahajan quite content sometimes to accept the original principal in cash either in one sum or by the instalment system, because it gives him fresh ready money for investment."

19. *Redemption of morgages amongst the Mundas.*—Redemption of mortgages was once undertaken by the Bengal Government for the Mundas. An account of this from the Bihar and Orissa Banking Enquiry Committee's Report is summarised below:—

In 1904, an enquiry was undertaken by Government of Bengal regarding usufructuary mortgages by Mundas in the Ranchi district. They were classified under two heads—

(*a*) mortgages, the amounts of which are less than the value of the lands mortgaged;
(*b*) mortgages the amounts of which exceed the value of lands mortgaged.

No action was proposed to be taken against (*b*), as regards (*a*), Government proposed to distribute loans under the Agriculturists' Relief Act. The Deputy Commissioner did not recommend the scrutiny of debts with a view to reducing those which were found to be exaggerated on the ground that legislation would be required and the general result would be unsatisfactory. In actual working the cases in which debt exceeded the value of land and in which the term of mortgages expired or was about to expire were taken up. The lands were mortgaged to Government and the recovery was by annual instalment, the period of repayment varying with the proportion that the debt bears to the value of the holding.

It was found that for an area 1,250 square miles, the total amount of the mortgages was Rs. 4,73,580. In cases involving Rs. 85,505 the estimated value of land exceeded the amount of the mortgage.

During the first year (1906) Rs. 70,191 was distributed as loans. During the next year Rs. 36,000 was distributed. During the third year Rs. 17,178 was advanced. In 1910, only Rs. 4,112 was actually distributed. In 1910, the Deputy Commissioner doubted the value of the scheme. He pointed out that Rs. 1,48,368 had been advanced. Out of the total amount due in repayment and interest over 41 per cent. stood unrecovered. The collection was mostly by certificate procedure. The Subdivisional Officer of Khunti reported that the loans have entirely failed in their object.

20. *The Central Provinces Debt Conciliation Act, 1933.*—Copy of the Central Provinces Debt Conciliation Act is given in Enclosure.

21. *The Madras Debt Conciliation Bill.*—The Madras Debt Conciliation Bill is intended to apply to agriculturists whose debts exceed Rs. 150 and is to be restricted in the first instance to debtors whose debts aggregate to below Rs. 25,000. Leave to introduce this Bill was granted by the Legislative Council on the 18th March 1934. It follows generally the lines of the Central Provinces Debt Conciliation Act.

22. Several points have been suggested in the Government Note in this connection for the consideration of the Board. These are:—

(1) The desirability of such legislation.

It may be stated that necessity for legislation is to give powers to the agency employed for the purpose of debt conciliation to bring together the parties, to have their statements as also of witnesses and lastly to record the agreement arrived at and register it so as to give it validity.

(2) The agency for such conciliation.

The agency in the Central Provinces is a debt Conciliation Board set up by Government. Some competent authorities in this province are, of opinion, that instead of a Board the work can be done more expeditiously by itinerant Revenue Officers of the status of Sub-Deputy Collectors conversant with local conditions.

(3) The amount of debt that should be taken up by the conciliation authority.

The proposal is to restrict conciliation of debt up to Rs. 1,000.

(4) The area that should be selected for the operation of the Act.

III.—*Compulsory Reduction of Interest.*

23. In paragraph 7 of the Note, Government have referred the question of compulsory reduction of interest. The scheme set forth provides for legislation under items (*c*) and (*d*). It is for the Sub-Committee to consider the lines on which legislation shall be undertaken. The Central Provinces Debt Conciliation Act provides for certification of debt in case there be no voluntary agreement between the parties, and the amount of debt so certified is to be recovered like voluntarily adjusted debts through Civil Courts. The Government scheme, however, contemplates under (*a*) the taking over of such debts by Co-operative Credit Societies, Land Mortgage Banks or other approved credit institutions, and so consequently the necessity of enquiry about surplus income as in (*b*) arises. In the circumstances, it is perhaps necessary for the Sub-Committee to consider on what lines legislation under (*c*) and (*d*) should be based to safeguard the institutions under (*a*). In view of the fact that the creditors will get back the amount of adjusted debt either in cash or its equivalent in good securities, it may be contemplated that the adjustment should be on liberal basis from the debtor's standpoint.

IV.—*Rural Insolvency Act.*

24. In paragraph 8 of the Government Note, the Board has been asked for opinion as to legislation for a Rural Insolvency Act. In the Reports of the Royal Commission on Labour and the Civil Justices

Committee there are references to insolvency regulations. It will be for the Sub-Committee to decide the form of Rural Insolvency Act suitable for the province.

The points for consideration and decision of the Sub-Committee may be summarised as follows:—

1. What class or classes of agriculturists (according to the definition of the Bengal Tenancy Act) may be considered as having good security to offer or whose credit is reasonably good?

2. Taking the classification under 1, what is the proportion of such class of agriculturists in debt who (*a*) cannot meet their existing debt obligations given the present level of prices of agricultural produce or (*b*) are unable through existing ordinary credit organisations to raise money on reasonable terms. (The decision will be mainly based on the report of the statistical Sub-Committee.)

3. Are any measures desirable and practicable:—

(*a*) For the reduction of debt of such class of agriculturists in the first instance?

(*b*) For restraining them from borrowing from outsiders in the future, if their present debts are reduced and transferred to a recognised credit society.

4. Is legislation of an emergency or a permanent character necessary to create statutory powers—

(*a*) For the carrying out of debt conciliation schemes on a voluntary basis?

(*b*) For the compulsory reduction of interest?

(*c*) For the compulsory recording of debts or licensing of money-lenders.

(*d*) In the form of a Special Rural Insolvency Act?

(*e*) For restraining fresh borrowing except for valid reasons?

5. If legislation is decided on, is it desirable to have a Special Sub-Committee from the member of the Sub-Committee to frame the scheme of such legislation?

6. If so, what should be the personnel of such Special Committee and the terms of reference and the time by which it should report? (The terms of reference may be for drafting in the form of Bills on the different items as in 4.)

Enclosure.

THE CENTRAL PROVINCES DEBT CONCILIATION ACT, 1932.

An Act to make provision for the setting up of Debt Conciliation Boards to relieve agriculturists from indebtedness.

TABLE OF CONTENTS.

PREAMBLE.

SECTIONS.

1. Short title, extent and commencement.
2. Definitions.
3. Establishment of Debt Conciliation Board.
4. Application for settlement between debtor and his creditors.
5. Verification of application.
6. Particulars to be stated in application.
7. Procedure on application.
8. Notice calling upon creditors to submit statement of debts.
9. Procedure on submission of statement of debts.
10. Board to endeavour amicable settlement.
11. Power of Board to require attendance of persons and productions of documents and to receive evidence.
12. Agreement of amicable settlement, its registration and effect.
13. Recovery of sums due under agreement.
14. Power of Board to dismiss application.
15. Grant of certificate by Board in respect of certain debts.
16. Bar of civil suits.
17. Avoidance of certain transfers of debtor's property.
18. Bar of appeal or revision.
19. Power of Board to review its order.
20. Appearance of party before Board by agent but not by legal practitioner.
21. Suspension of pending application or suit.
22. Submission of report by Boards regarding sums due to Government.
23. Allowance of time for limitation.
24. Members of Board deemed to be public servants.
25. Power to make rules.
26. General provisions regarding rules.

The Central Provinces Debt Conciliation Act, 1933.

An Act to make provision for the setting up of Debt Conciliation Boards to relieve agriculturists from indebtedness.

Preamble.—Whereas it is expedient to relieve agriculturists from indebtedness by amicable settlement between them and their creditors;

And whereas the previous sanction of the Governor-General required by sub-section (*3*) of section 80-A of the Government of India Act has been obtained to the passing of this Act;

It is hereby enacted as follows:—

1. (1) *Short title, extent and commencement.*—This Act may be called the Central Provinces Debt Conciliation Act, 1933.

(2) It extends to the whole of the Central Provinces.

(3) It shall come into force on such date, as the Local Government may, by notification, direct.

2. *Definitions.*—In this Act, unless there is anything repugnant in the subject or context—

(*a*) the expressions "malik-makbuza", "proprietor", "raiyat", "raiyat-malik" and "village" shall have the meanings assigned to them in the Central Provinces Land Revenue Act, 1917 (C. P. Act II of 1917);

(*b*) the expressions "agriculture", "holding", "land", "occupancy tenant" and "absolute occupancy tenant" shall have the meanings assigned to them in the Central Provinces Tenancy Act, 1920 (C. P. Act I of 1920);

(*c*) "Board" means a Debt Conciliation Board established under sub-section (*1*) of section 3;

(*d*) "creditor" means a person to whom a debt is owing and includes a co-operative society;

(*e*) "debt" includes all liabilities owing to a creditor, in cash or kind, secured or unsecured, payable under a decree or order of a civil court or otherwise, whether due or not due, but shall not include arrears of wages, land revenue or anything recoverable as an arrear of land revenue, or any money for the recovery of which a suit is barred by limitation;

(*f*) "debtor" means a person who earns his livelihood mainly by agriculture and who is an occupancy tenant or absolute-occupancy tenant or raiyat or raiyat-malik or a malik-makbuza or a proprietor, whose debts exceed Rs. 150;

(*g*) "prescribed" means prescribed by rules made under this Act.

3. (1) *Establishment of Debt Conciliation Board.*—The local Government may establish a Debt Conciliation Board for any district or part of a district. Such Board shall consist of a Chairman and two or more members, not exceeding five, including the Chairman, to be appointed by the local Government which may, for reasons to be recorded in writing, cancel any appointment and dissolve any Board.

(2) The Chairman and every member of a Board so established shall be appointed for a term not exceeding one year. Such Chairman or member may, on the expiration of the period for which he has been appointed, be again appointed for a further term not exceeding one year.

(3) A Board shall have such quorum as may be prescribed.

(4) Where the Chairman and members of a Board are unable to agree, the opinion of the majority shall prevail. Where the Board is equally divided the Chairman shall have a casting vote.

4. (1) *Application for settlement between debtor and his creditors.*—A debtor or any of his creditors may apply to the Board appointed for the area in which any holding, land or village of the debtor or any part thereof, is situate, to effect a settlement between the debtor and his creditors:

Provided that no application shall be made if the debtor's debts exceed twenty-five thousand rupees or such larger amount as may be prescribed for each area.

(2) No debtor or creditor shall simultaneously make more than one application, and where applications have been made by the debtor and any of his creditors, the applications made by the creditors shall be merged in the application made by the debtor.

5. *Verification of applications.*—Every application to a Board shall be in writing and shall be signed and verified in the manner prescribed by the Code of Civil Procedure, 1908 (V of 1908), for signing and verifying plaints.

6. (1) *Particulars to be stated in application.*—Every application presented by a debtor to a Board shall contain the following particulars, namely:—

(*a*) a statement that the debtor is unable to pay his debts;

(*b*) the place where he resides;

(*c*) the amount and particulars of all claims, against him, together with the names and residences of his creditors so far as they are known to, or can by the exercise of reasonable care and diligence be ascertained by him; and

(*d*) the amount and particulars of all his property, including claims due to him, together with a specification of the value of such property not consisting of money, and the place or places at which any such property is to be found.

(2) Every application presented by a creditor shall contain the following particulars, namely:—

(*a*) the place where the debtor resides; and

(*b*) the amount and particulars of his claim against such debtor.

7. (1) *Procedure on application.*—On receipt of an application under section 4, the Board shall pass an order fixing a date and place for hearing the application:

Provided that the Board may at any time dismiss the application if, for reasons to be stated in writing, it does not consider it desirable to attempt to effect a settlement between the debtor and his creditors.

(2) Notice of the order under sub-section (*1*) shall be sent by registered post to the debtor or creditors, as the case may be.

8. (1) *Notice calling upon creditors to submit statement of debts.*—If, after examining the debtor, it is in the opinion of the Board desirable to attempt to effect a settlement between him and his creditors, a notice shall be issued and served or published in the manner prescribed calling upon every creditor of the debtor to submit a statement of debts owed to such creditor by the debtor. Such statement shall be submitted to the Board in writing within two months from the date of service or publication of the notice, as the case may be:

Provided that, if the Board is satisfied that any creditor was, for good and sufficient cause, unable to comply with such directions, it may extend the period for the submission of his statement of the debt owed to him.

(2) Every debt of which a statement is not submitted to the Board in compliance with the provisions of sub-section (*1*) shall be deemed for all purposes and all occasions to have been duly discharged:

Provided that, if a creditor proves to the satisfaction of the Board or a civil court that the notice was not served on him and that he had no knowledge of its publication, the Board or Court may revive the debt.

9. (1) *Procedure on submission of statement of debts.*—Every creditor submitting a statement of the debts owed to him in compliance with a notice issued under sub-section (*1*) of section 8 shall furnish, along with such statement, full particulars of all such debts and shall at the same time produce all documents, including entries in books of account, on which he relies to support his claims, together with a true copy of every such document.

(2) The Board shall, after marking for the purpose of identification every original document so produced and verifying the correctness of the copy, retain the copy and return the original to the creditor.

(3) If any document which is in the possession or under the control of the creditor is not produced by him as required by sub-section (*1*), the document shall not be admissible in evidence against the debtor in any suit brought by the creditor or by any person claiming under him.

10. *Board to endeavour amicable settlement.*—The Board shall call upon the debtor and each creditor, respectively, to explain his case regarding each debt and shall endeavour to induce them to arrive at an amicable settlement.

11. (1) *Power of Board to require attendance of persons and production of documents and receive evidence.*—Subject to the provisions of sections 132 and 133 of the Code of Civil Procedure, 1908 (V of 1908), and to rules made under section 25 a Board shall have power to summon any person whose attendance it considers necessary either to be examined as a party or to give evidence as a witness or to produce any document for the purposes of any inquiry under this Act.

11. (2) Any person present may be required by a Board to give evidence or to produce any document then and there in his possession or power.

12. (1) *Agreement of amicable settlement, its registration and effect.*—If the creditors to whom not less than forty per cent. of the total amount of the debtor's debts are owing come to an amicable settlement with the debtor, such settlement shall forthwith be reduced to writing in the form of an agreement recording the amounts payable to such creditors and the manner in which and the times at which they are to be paid. Such agreement shall be read out and explained to the parties concerned, and shall be signed or otherwise authenticated by the Board and the parties:

Provided that, when a co-operative society is one of such creditors, no settlement, in so far as it affects the debts owing to such society, shall be valid without the previous approval in writing of the Registrar of Co-operative Societies.

(2) An agreement thus made shall, within fourteen days from the date of its making, be registered under the Indian Registration Act, 1908 (XVI of 1908), by the Chairman of the Board in such manner as may be prescribed and it shall then take effect as if it were a decree of a civil court.

(3) For the purpose of the registration of an agreement under sub-section (*2*), the Chairman of the Board shall be deemed to be an officer of Government empowered to execute such agreement within the meaning of section 88 of the Indian Registration Act, 1908 (XVI of 1908).

13. (1) *Recovery of sums due under agreement.*—If a debtor defaults in paying any amount due in accordance with the terms of an agreement registered under sub-section (*2*) of section 12, such amount shall be recoverable as an arrear of land revenue on the application of the creditor made within ninety days from the date of default.

(2) Where the Deputy Commissioner fails to recover as an arrear of land revenue any part of such amount, he shall certify that it is irrecoverable and thereupon the agreement shall cease to subsist.

(3) Where an agreement ceases to subsist, any amount which was payable under such agreement but has not been paid shall be recoverable as if a decree of a civil court had then been passed for its payment.

14. *Power of Board to dismiss application.*—If no amicable settlement is arrived at under sub-section (*1*) of section 12, the Board shall dismiss the application.

15. (1) *Grant of certificate by Board in respect of certain debts.*—Where, during the hearing of any application made under section 4, any creditor refuses to agree to an amicable settlement, the Board may, if it is of opinion that the debtor has made such creditor a fair offer which the creditor ought reasonably to accept, grant the debtor a certificate, in such form as may be prescribed, in respect of the debts owed by him to such creditor.

(2) *Power of Court to disallow costs or interest.*—Where any creditor sues in a civil court for the recovery of a debt in respect of which a certificate has been granted under sub-section (*1*), the Court shall, notwithstanding the provisions of any law for the time being in force, not allow the plaintiff any costs in such suit, or any interest on the debt after the date of such certificate in excess of simple interest at six per cent. per annum on the amount due on the date of such certificate.

(3) Where, after the registration of an agreement under sub-section (2) of section 12, any unsecured creditor sues for the recovery of a debt, other than a debt incurred subsequent to such agreement, in respect of which a certificate has been granted under sub-section (1) or any creditor sues for the recovery of a debt incurred after the date of such registration, any decree passed in such suit shall, notwithstanding anything contained in the Code of Civil Procedure, 1908 (V of 1908), not be executed until all amounts recorded as payable under such agreement have been paid or such agreement has ceased to subsist.

16 *Bar of civil suits.*—No civil court shall entertain—

(*a*) any suit in respect of—

(*i*) any matter pending before a Board, or

(*ii*) the validity of any procedure or the legality of any agreement made under this Act, or

(*iii*) the recovery of any debt recovered as wholly or partly payable under an agreement registered under sub-section (2) of section 12 from any person who, as a debtor, was party to such agreement, whether such agreement is subsisting or not, or

(*iv*) the recovery of any debt which has been deemed to have been duly discharged under sub-section (2) of section 8, except a debt which is revived under the proviso to that sub-section;

(*b*) any application to execute a decree, the execution of which is suspended under sub-section (3) of section 15.

17. *Avoidance of certain transfers of debtor's property.*—Every transfer of property made, with intent to defeat or delay the creditors of the debtor, after an application has been made to a Board under section 4 and until the agreement registered in respect of such application has ceased to subsist, shall be voidable at the option of any creditor so defeated or delayed.

18. *Bar of appeal or revision.*—No appeal or application for revision shall lie against any order passed by a Board.

19. *Power of Board to review its order.*—A Board may, on the application from any person interested made within ninety days of the passing of an order, review any order passed by it and pass such order in reference thereto as it thinks fit:

Provided that no order shall be varied or reversed unless notice has been given to the persons interested to appear and be heard in support of such order.

20. *Appearance of party before Board by agent but not by legal practitioner.*—In any proceedings before a Board any party may be permitted to appear by an agent authorized in writing, but not by a legal practitioner.

21. *Suspension of pending application or suit.*—When an application has been made to a Board under section 4, any suit or other proceedings then pending before a civil court in respect of any debt for the settlement of which application has been made shall be suspended until the Board has dismissed the application or an agreement registered under sub-section (2) of section 12 has ceased to subsist.

22. *Submission of reports by Boards regarding sums due to Government.*—Where in the course of an inquiry into an application made under section 4 a Board finds that there is any sum owing to Government on account of loans advanced under the Agriculturists' Loans Act, 1884 (XII of 1884), or the Land Improvement Loans Act, 1883 (XIX of 1883), or otherwise, the Board shall report this fact through the Deputy Commissioner to the Commissioner.

23. *Allowance of time for limitation.*—In calculating the period of limitation for any suit filed in, or proceeding before, a civil court for the recovery of a debt which was the subject of any proceedings under this Act, the time during which such proceedings had continued shall be excluded.

24. *Members of Board deemed to be public servants.*—The members of a Board shall be deemed to be public servants within the meaning of the Indian Penal Code (XLV of 1860).

25. *Power to make rules.*—In addition to any power specially conferred by this Act, the local Government may make rules—

(*a*) prescribing the quorum for, and regulating the procedure before, a Board;

(*b*) prescribing the manner in which notices shall be issued and served or published under sub-section (*1*) of section 8;

(*c*) prescribing the charges to be made by a Board for anything done under this Act and the persons by whom and the manner in which such charges shall be paid;

(*d*) prescribing the records to be kept and the returns to be made by a Board;

(*e*) prescribing the allowances, if any, to be paid to the Chairman and members of a Board;

(*f*) regulating the power of a Board to summon parties and witnesses under section 11 and the grant of expenses to witnesses;

(*g*) prescribing the place at which and the manner in which an agreement shall be registered under sub-section (*2*) of section 12;

(*h*) prescribing the form of certificate to be granted under sub-section (*2*) of section 13 or sub-section (*1*) of section 15; and

(*i*) generally, for the purpose of carrying into effect the provisions of this Act.

26. (1) *General provision regarding rules.*—All rules for which provision is made in this Act shall be made by the Local Government and shall be consistent with this Act.

(2) All rules shall be subject to the condition of previous publication.

(3) In making any rule the Local Government may direct that a breach thereof shall be punishable with fine which may extend to fifty rupees, and, where the breach is a continuing one, with further fine which may extend to ten rupees for every day after the first during which the breach has been persisted in.

Note for the Sub-Committee on the organisation and provision of financial machinery for the purpose of liquidating agricultural debt (by Secretary, Board of Economic Enquiry).

This note is a rough attempt to review the respective tasks before the Statistical Sub-Committee and the Financial Sub-Committee. To a great extent it appears their work will overlap.

The Statistical Sub-Committee will examine all the information bearing on the extent of the indebtedness of the agricultural population and the resources at their command for paying interest and their prospects of clearing it. The intensive enquiries of over 7,000 families are being analysed and figures of income, expenditure and debt, will be supplied separately for those families whose debts (a) exceed 2 years' income, (b) are between one and two years' income, and (c) are below one year's income. It is hoped that the Statisticians will be able to advise how far these figures can be taken as representative of different parts of the province by comparing and testing items of information which have been previously collected for the whole province, e.g., the average number of persons in a family, the average amount of land held, the average amount of rent paid, the average produce of different crops. The Sub-Committee as a whole may then be in a position to recommend that the Government scheme of reducing the debt by conciliation and transferring the balance to Land Mortgage Banks, Co-operative Banks, or any other similar institution should be tried in respect of say 40 per cent. of the agricultural families in the province or in certain districts or subdivisions.

2. *Control.*—It has been pointed out in the Government Note that the co-operative movement in Bengal has suffered from inadequate control and guidance. It may, perhaps, be mentioned that Mr. Wolff has often emphasised the need of a considerable measure of Government control in view of the special circumstances of India. The word control represents in all—three different processes, supervision, audit and inspection. Although audit and inspection are provided for in the Co-operative Societies Act of 1912, there is no specific provision dealing with supervision.

The foremost point of importance for decision of the Sub-Committee would, perhaps, be as to the form and nature of control, viz., administrative and financial, that should be exercised by Government with regard to the suggested machineries for taking over the adjusted loans. Because on it will depend the whole structure of the organisation.

If the Sub-Committee decides on a close control and supervision by the Government the nature of control and the approximate strength and cost of the supervising and audit staff required would have to be considered by the Sub-Committee to judge of the feasibility of the proposal.

3. *Finance.*—The next point that may be considered by the Sub-Committee is regarding the financing of the suggested organisations. The defect in the present type of Co-operative Societies, as has been stated in the Government Note, is that they are financed by short-term deposits which is unsuitable to supply the long-term loans required by agriculturists for redemption of debts. The Central Banking Enquiry Committee has suggested that in such cases financing should be by means of debentures as will appear from the scheme of the Committee

in the Statement. The Sub-Committee will be in a position to form an idea of the indebtedness of the different main areas of the province on the estimate of the statistical Sub-Committee.

It may be stated for the consideration of the Sub-Committee that under a properly organised system controlled and regulated by Government, the necessary finances can be raised on more favourable terms. In this connection the possibilities of securing help and advice from the agricultural credit department of the Reserve Bank may be considered coupled with the question of what security can be offered.

After dealing with the two main common points regarding the credit organisation, the Sub-Committee may, perhaps, consider the types of the different organisations that would be suitable to meet the needs of different areas or different classes of debtors.

4. (1) *Co-operative Societies.*—The defects in the present type of Co-operative Societies have been dealt with in the Government Note. It will be for the Sub-Committee to suggest a suitable type of Co-operative Credit Society that can be organised under the existing Act or an amended Act to meet the purpose.

(2) *Land Mortgage Banks.*—In the Statement the schemes for organisation of the Land Mortgage Banks as suggested by the Central Banking Enquiry Committee and that for the experimental banks referred to in paragraph 9 of the Government Note have been shown.

It will be for the Sub-Committee to consider the type that will be suitable in the special conditions prevailing in the province, and if any modifications are necessary.

5. *Approved Credit Organisation.*—Approved credit organisation is a very wide term. It is presumed by some competent observers that they may be institutions financed through Government, e.g., by debentures with interest guaranteed by Government as in case of land mortgage banks or from funds under the control and management of Government or they may be quite independent of the financial help from Government, subject, however, to the close supervision and audit of Government as contemplated before. It has been stated in paragraph 4 of the Government Note that the proposed organisations would be exempt from any restrictions contemplated to be imposed on private money-lenders and in the scheme suggested in paragraph 7, it has been stated that the adjusted debt would be transferred to the credit organisations. It has, however, been strongly emphasised that the credit organisation would require careful supervision, it would not be just to the original creditor to compel him to accept a smaller amount that was due unless it were possible to give him the assurance that his new debtor (the creditor organisation) would not default.

In the case of the first type of approved credit organisations, there is no danger of the assurance being wanting. But considering the vastness of rural indebtedness, which has been estimated by the Provincial Banking Enquiry Committee at rupees one hundred crores, some think it to be worth while to consider the possibilities of utilising the existing credit organisations of individual money-lenders and joint stock companies carrying on loan business. Some restriction has been imposed regarding the keeping of proper accounts and furnishing of the same to a debtor and penalty for non-compliance under sections 7 and 8 of the

Bengal Money-lenders' Act. But if the existing organisations are to take a share in the responsibilities and privileges of the suggested approved credit institutions, they must subject themselves to far greater and closer restriction and supervision.

6. If any scheme for the transference of debt to Government controlled banks is approved, it may be necessary to suggest legislative measures not only for preventing the debtors borrowing outside their own re-organised banks, but to ensure that if the debtors default in payment of interest without very good cause their lands should pass to the Bank without expensive and protracted litigation—the apprehension of which might prevent the bank from being able to sell the lands or settle them with other persons, in which case the banks would be bankrupt in a few years.

Consideration of this difficulty may not be primarily the duty of the Finance Sub-Committee but its ideas on the subject will certainly be welcomed.

7. A statement comparing the schemes for Land Mortgage Banks as suggested by the Indian Central Banking Enquiry Committee and the one adopted by the Co-operative Department, Bengal, is attached.

8. The points for decision of the Sub-Committee may be summarised as below:—

(1) To what extent is it desirable or practicable that adjusted debts should be taken over:

(*a*) by Co-operative Credit Societies;

(*b*) by Land Mortgage Banks; and

(*c*) by approved credit organisations.

(2) In case of 1(a), (i) what should be the scheme of these societies and (ii) what kinds of loans should be financed by them.

(3) In case of 1(b), (i) should these Land Mortgage Banks be formed with direct Government support or through Co-operative Organisations; (ii) what kinds of loans should be financed by them, and (iii) what should be the general scheme of these Banks.

(4) In case of 1 (c), what shall be the scheme of approved credit organisations managed directly by Government.

(5) In case of 1 (*c*), if other Credit Organisations managed by private individuals or by joint stock companies are to be approved, (i) what should be the scheme of control and supervision of the organisations by Government, and (ii) what should be the scheme of their management.

(6) In the schemes of different organisations recommended in what cases legislation would be necessary and the frame of such legislation.

(7) In case of legislation should any provision be made in particular for enforcement of mortgage security by any summary procedure for foreclosure and sale.

(Schemes of Land Mortgage Banks Co-operative Type).

Items.	According to Indian Central Banking Enquiry Committee's Recommendations. (References are to Recommendations.)	Scheme by Co-operative Department. (References to paragraphs of the scheme and the by-laws.)	Remarks and notes.
1	2	3	4
1. Object ..	Redemption of land and houses of agriculturists and liquidation of old debt. (49).	Same as in column 2. (1) Includes further objects :— (*a*) Improvement of method of cultivation. (*b*) Purchase of land in special cases. (4).	
2. Restrictions	No money should be advanced which is not economically profitable to the borrower and loans should be devoted to principal object of the loan. (49)	Same as in column 2. (4).	
3. Structure ..	1. Provincial Land Mortgage Corporation (provisionally Provincial Bank). (59). 2. District Mortgage Banks over fairly large area. (57). 3. Primary Land Mortgage Banks 4. Members of Primary Land Mortgage Banks, small agriculturists and owners of small holdings.	1. Provincial Co-operative Bank, Limited (tentative). (4). 3. Primary Land Mortgage Banks ; jurisdiction conterminous with subdivisions. (2). 4. Members—Members of Co-operative Societies and other cultivators, small land-owners and rent receivers, i.e., persons of limited means who are competent to contract legally. (2).	
4. Control and management.	Not laid down	Board of Directors by election—Registrar, Co-operative Societies, to nominate one-third. (6).	
5. Finance ..	1. Provincial Land Mortgage Corporation— (*i*) Share capital (52). (*ii*) Debentures to be trustee securities interest to be guaranteed. 2. District Mortgage Banks— (*i*) Share capital. (*ii*) Loans from Provincial Land Mortgage Corporation against transfer of the mortgage securities. (58). 3. Provincial Land Mortgage Banks— (*i*) Share capital to be raised by subscription or deduction of 5 per cent. of the amount borrowed by members. (*ii*) Loans from District Mortgage Bank on the mortgage of mortgaged properties. 4. Members—Loans— (*i*) maximum Rs. 5,000. (58). (*ii*) 50 per cent. of the mortgage security. (50). (*iii*) according to paying capacity (50).	1. Provincial Co-operative Bank Limited— (*i*) Existing share capital. (*ii*) Debentures of Rs. 12½ lakhs to be floated by Provincial Co-operative Bank. (8). Reassignment of the mortgage by Provincial Co-operative Bank to trustees. Registrar, Co-operative Societies to be a trustee. (4). 2. Primary Land Mortgage Bank— (*i*) Share capital—Rs. 20 each share—Rs. 10 to be paid on allotment. (*ii*) assignment of the mortgages to the Provincial Bank. (4). (*iii*) twenty times the paid-up share capital *plus* reserve fund—provided not to exceed 50 per cent. the value of property mortgaged to it (bye-law 21). 4. Members—Loans— (*i*) 20 times the paid-up value of shares in the Bank with maximum of Rs. 2,500 (5 and 6A). (*ii*) 50 per cent. of the total value of land mortgaged. (*iii*) 75 per cent. of the total income derived from land during the period of the loan. [Regarding (*i*) Government rules 10(4) and 25(3) limiting to 10 times to be relaxed.] (*iv*) Two collateral securities by two other members. (6A). (*v*) No loan without previous sanction of the financing Bank (bye-law 37).	

Items.	According to Indian Central Banking Enquiry Committee's Recommendations. (References are to Recommendations)	Scheme by Co-operative Department. (References to paragraphs of the scheme and the by-laws.)	Remarks and notes.
1	2	3	4
4. Period ..	1. Debentures—Period of currency (not stated).	....	
	2. Loans by District Mortgage Banks from Provincial Land Mortgage Corporation (not stated).	....	
	3 Loans by Provincial Land Mortgage Bank (not stated).	....	
	4. Members—5, 10, 15 or 20 years—20 years being the maximum. (50).	4. Not to exceed 20 years (bye-law 44)	
5. Method of payment.	1. Debenture—adequate provision for redemption at regular intervals. Bombay and the Punjab have funds without Reserve Fund or Dividends. Madras—Reserve Fund.	1. Debenture—No procedure stated.	
	4. Loans by members to be repaid—	4. (i) Instalment. (8).	
	(a) by equated payments thereby amortising the loan after a period of years.	(ii) Annuity. (9).	
	(b) by graduated payments in special cases. (51).		
6. Rates of interest.	Not stated ..	1. Debentures at 5 per cent. (4).	
		2. Loans to Primary Land Mortgage Banks—6½ to 7 per cent. (4).	
		4. Loans to Members 10½ per cent. (6A).	
7. Reinvestment of Principal.	Debentures—	Debentures—Not stated. Principal repaid to be reinvested to existing members or new members with the sanction of the financing bank and Registrar. (8).	
	(i) Sinking Fund.		
	(ii) Reserve Fund.		
7A. Reserve Fund.	....	Primary Land Mortgage Bank—	
		(i) Reserve Fund—75 per cent. of the profit. (9).	
8. Profits ..	....	25 per cent.—Reserve Fund up to 25 per cent. Dividend and Bonus.	
		Balance—to Reserve Fund. (8).	
		Reserve Fund to be separately invested. (8).	
9. Debt conciliation and adjustment.	Vigorous policy of debt conciliation by Government by equated payments on—	(i) To be limited to outside debt only but not to debt of Co-operative Credit Societies.	
	(i) Voluntary basis.	(ii) No scheme.	
	(ii) On compulsory basis by special legislation		
10. Foreclosure and Sale.	Land Mortgage Banks shall have power of foreclosure and sale without recourse to Civil Courts. (62).	In case of default the Board of Directors shall call in the loan (by-law 45).	
	This to be secured by legislation.		
11. Insolvency Procedure.	Amendment of the Insolvency law so as to give greater protection to land mortgage bank against avoidance of mortgage by the unsecured creditors of insolvents (63).		

Note on the Punjab Bill on relief of indebtednesss as modified by Select Committee.

The Punjab Bill on relief of indebtedness as modified by the Select Committee is divided into 8 parts, viz.—

(1) Preliminary.

(2) Insolvency Procedure.

(3) Usurious Loans.

(4) Debt Conciliation Board.

(5) Damdupat.

(6) Deposit in Courts.

(7) Amendment of the Punjab Redemption Mortgages Act.

(8) Miscellaneous amendments of the civil law.

This note summarises the main points on which the Punjab Bill differs from the Bill for the relief of indebtedness drafted for the Board of Economic Enquiry, which is referred to here as "Bengal Bill" for the purpose of brevity.

2. The definition of "Loan" in part I of the Punjab Bill does not differ much from that in the Bengal Bill as they now stand.

3. Part II of the Punjab Bill amends the Provincial Insolvency Act (*a*) by adding a clause in section 10(*1*), which has the effect of reducing the minimum assets of an insolvent to Rs. 250 from Rs. 500 and (*b*) by substituting in section 74 "Rs. 15,000" for "Rs. 5,000" and thus raising the jurisdiction for summary administration of a debtor's property.

It may be noted that there is no minimum proposed in the Bengal Bill which provides in clause 14B for the reduction of an insolvent's debt to his paying capacity by an order of adjustment and for the fixing of instalments for payment accordingly: if there is default in an instalment it provides (in clause 15) for the sale of the insolvent's property excluding his homestead for the rateable distribution of sale proceeds and for granting of a discharge certificate.

4. In part III of the Punjab Bill several amendments of the Usurious Loans Act are contemplated. The main amendment is to the effect that all compound interest shall be deemed to be excessive except on loans from and deposits with Government, local bodies, joint stock companies and co-operative societies and in mortgages by any person other than an agriculturist.

The provisions are to have retrospective effect. There is nothing similar in the Bengal Bill as the Bengal Money Lenders' Act covers them.

5. It is in part IV of the Punjab Bill that the comparison with the Bengal Bill is most interesting.

The definition of "Debt" in the clause 7(*1*) of the Punjab Bill excludes—

(*a*) "Land Revenue" just as "rent" was excluded in the original draft of Bengal Bill. (The Board is now of opinion that "rent" should not be excluded but should be the subject of conciliation just like other debts);
(*b*) Debts barred by limitation. This is not of much importance as a time-barred debt is *ipso facto* legally in effective;
(*c*) Debts due to co-operative banks and societies, and
(*d*) to commercial banks.

There is much controversy as regards exclusion of debts to co-operative societies. The Bengal Bill does not exclude such debts but provides that proceedings which affect them are to be initiated subject to the approval of the Registrar of Co-operative Societies (clause 16). The minority of the Punjab Select Committee notes that the wisdom of excluding co-operative banks is open to question particularly as the Directors of these banks are of the borrowing class: and they hold that these banks require no special protection particularly if as is represented, their dealings are such as to show the utmost consideration for the borrowers.

The Punjab Bill defines "Agriculture" in clause 7(*3*) as in the English Small Holdings' Act, 1892, 55 and 56 V.C. 31. The Bengal Bill [clause 2(*1*)] would give it the same meaning as in the Bengal Tenancy Act, where, although it is not defined, it has been interpreted by judicial decisions to include horticulture, etc., "Creditor" and "supplementary income" are defined in the Bengal Bill but not in the Punjab Bill.

The Punjab Bill clause 8(*3*) provides for fixing the pecuniary limit of a Board's jurisdiction. The Bengal Bill does not fix any limit.

The Punjab Bill (clause 12) does not include a proviso empowering the Board to dismiss an application such as appears in the Bengal Bill (clause 11A).

Consequently the Punjab Bill clause 13(*1*) makes it obligatory on the Board to issue notices on creditors which the Bengal Bill clause 8(*1*) provides for issue of notices only if it is thought necessary after examination of the applicant.

The Punjab Bill lays down that if a creditor does not submit a statement of debt after receiving notice, the debt shall be deemed duly discharged [clause 13(*2*)], but the Bengal Bill [clause 8(*2*)] provides only that, in such a case, the debt shall be deemed to be the amount stated by the debtor in his application, subject to reduction under debt conciliation.

The Bengal Bill [clause 12(*1*)] provides for making an award when 60 per cent. of the debtor's debt is amicably settled between him and his creditors, whereas the Punjab Bill [clause 17(*1*)] provides for an authenticating agreement if "all or any of the creditors" agree (The minority of the Select Committee opposes this on the ground that it is fatal to the whole idea of conciliation. It would be open under the modified provision for a single creditor to effect the rights of other creditors.)

The Punjab Bill clause 17(*3*) omits provision of registration of an agreement or award such as appears in the Bengal Bill [clause 12(*2*)], as the Select Committee decided unanimously that the procedure for registration was complex and unnecessary.

Clause 19 of the Punjab Bill deals with the procedure when a creditor refuses a reasonable offer by a debtor: this corresponds to clause 14 of the Bengal Bill but differs fundamentally from it. Both Bills provide for the issue of a certificate or award by the Board in respect of the debts covered by the offer: but in the Punjab Bill the result is merely that a civil court will allow no costs in a suit for these debts and will not allow interest at more than 6 per cent. from the date of the certificate; while the award proposed by the Bengal Bill would have the effect of a decree and would actually reduce the debt though not to a figure below the original principal.

6. There is nothing in the Punjab Bill corresponding to the following clauses of the Bengal Bill:—

(*a*) realisation of an amount settled amicably or awarded under clause 14 under the Public Demands Recovery Act, in case of failure to pay instalments as fixed in the award;

(*b*) clause 17A(*ii*) barring execution of a decree for a loan incurred after an award till the amounts covered by them have been paid;

(*c*) clause 14A which provides that secured debts should have priority and that the mortgage or lien on the property will subsist till the awarded or certificated debts are paid; and

(*d*) clause 23 which provides that an award shall be negotiable and may be transferred to an approved credit organisation.

7. Part V (Damdupat) of the Punjab Bill is not necessary for Bengal in view of the Bengal Money-Lenders' Act.

8. There is nothing in the Bengal Bill to correspond with the following items in the Punjab Bill:—

(*a*) Part VI— Deposit in Court.

(*b*) Part VII—Amendment of the Punjab Redemption of Mortgages Act.

(*c*) Part VIII—Miscellaneous amendments of the civil law. The important provision is clause 33, prohibiting arrest of a debtor except under certain circumstances, one of which is refusing or neglecting to pay the amount of a decree in spite of having the means of paying it.

Clause 34 of the Punjab Bill restricts the prohibition contained in section 60(*1*) of the Civil Procedure Code against attachment of house or other buildings belonging to and occupied by an agriculturist, by adding the words "not let out on rent or let to others or left vacant for a period of a year or more."

Clause 35 omits rule 2(*3*) in Order XXI of the Civil Procedure Code, which is to the effect that no payment out of court will be recognised if not certified by a court.

Clause 36 amends section 48 of Civil Procedure Code by making the period of limitation for recovery under a decree six years instead of twelve.

DEPARTMENT OF AGRICULTURE, BENGAL.

Dacca, the 17th January 1935.

First Forecast of the Wheat Crop of Bengal, 1934-35.

(*Note.*—On an average of the five years ending 1932-33, the area under wheat in Bengal has represented some 0·4 per cent. of the total area under wheat in India. The ratio of the irrigated wheat acreage to total wheat acreage in (*a*) British India and (*b*) in the territory now reported on has, in the five years ending 1932-33, averaged (*a*) 41·4 and (*b*) 10·8 per cent., respectively.)

Explanatory.—Four forecasts of wheat crop are published. The present forecast deals only with the estimated area sown and the general condition of the crop in the early stages.

Acreage.—According to the estimates of the District Officers, the total area sown amounts to 151,600 acres this year as against 145,400 and 145,500 acres, respectively, in the corresponding and final forecasts of last year.

Character of the season.—Rainfall in October and November was sufficient for the preparatory tillage and for the sowings of the crop which generally took place at the usual time. Subsequent weather was helpful for germination and growth. The present outlook is promising, on the whole.

K. McLEAN,
Director of Agriculture, Bengal (offg.)

APPENDIX.

First Forecast of the Wheat Crop of Bengal, 1934-35.

District.	Estimated normal area under wheat crop.	Estimated area under wheat.		Date on which the sowing of the crop was begun this year and whether that date was early, normal or late.	Remarks by District Officers.
		Last year.	This year.		
	Acres.	Acres.	Acres.		
Nadia ..	23,100	12,600	13,200	Beginning of November. Late	The weather has been favourable. The condition of the crop is fair.
Murshidabad ..	47,100	27,200	34,100	Second week of October to middle of November. Early in Sadar and Kandi subdivisions, elsewhere. Normal.	The weather has been favourable. The condition of the crop is fair in Sadar and Kandi subdivisions and good in Lalbagh and Jangipur subdivisions.
Jessore ..	700	300	200	November. Normal ..	The weather has been favourable. The condition of the crop is fair.
Burdwan ..	1,500	1,100	1,400	First week of November. Normal.	The weather has been favourable. The condition of the crop is good.
Birbhum ..	4,700	4,200	4,400	End of October. Normal ..	The weather has been favourable.
Bankura ..	6,500	6,500	6,300	Middle of November. Normal	The weather has been fairly favourable. The condition of the the crop is fair.
Midnapore ..	800	900	800	November. Normal ..	The weather has not been favourable on the whole.
Hooghly ..	200*	300	200	Middle of November. Normal	The weather has been favourable. The condition of the crop is fair.
Rajshahi ..	7,800	10,500	10,500	December. Normal ..	Ditto.
Dinajpur ..	1,300	2,300	2,400	Middle of November. Normal	The weather has been favourable. The condition of the crop is good.
Jalpaiguri ..	800	700	700	First week of November. Normal.	The weather has been favourable. The condition of the crop is fair.
Darjeeling ..	2,900	3,400	3,300	November. Normal ..	The weather has been favourable.
Rangpur ..	3,700	3,900	3,900	Ditto ..	The weather has been favourable. The condition of the crop is good.
Bogra ..	700	1,500	1,500	Ditto ..	The weather has been fair.
Pabna ..	8,800	8,600	6,100	First week of November. Normal.	The weather has been favourable on the whole. The condition of the crop is fair in Sadar subdivision and good in Serajganj subdivision.
Malda ..	43,000	50,000	50,000	Ditto ..	The weather has been favourable. The condition of the crop is good.
Dacca ..	8,300	8,400	9,400	November. Normal ..	The weather has been favourable. The condition of the crop is fair.
Mymensingh ..	600	500	500	Ditto ..	Ditto.
Faridpur ..	2,800	2,600	2,700	End of November. A little late	The weather has been favourable. The condition of the crop is good.
Total Bengal ..	160,300	145,500	151,600		

*Revised.

Statement of weekly gauge readings on the river Ganges at Rampur Boalia for the week ending the 12th January 1935.

Date.	Hour.	Height of surface above P. W. D. datum.	Height of surface above P. W. D. datum on the same date last year.	Remarks.
1935.				Zero of gauge referred to B. M. on Rajshahi College step ; value 64·73.
6th January	7 a.m.	39·54	38·21	
7th „	7 „	39·49	38·16	
8th „	7 „	39·44	38·11	
9th „	7 „	39·39	38·06	Value of 0=36·84P. W. D.
10th „	7 „	39·34	37·96	
11th „	7 „	39·29	37·86	
12th „	7 „	39·24	37·76	

Highest recorded level on 26-8-1879=64·24.
Lowest recorded level on 24-4-1931=32·05.

S. M. Hossain, for *Subdivisional Officer*,
Irrigation Department, Rajshahi.

Rampur Boalia, the 12th January 1935.

Statement showing the gauge readings at Dacca Waterworks Station on the river Buriganga for the week ending 12th January 1935.

Date.	At highest water.		At lowest water.		Commencement of—		Remarks.	
	Time.	Reading.	Time.	Reading.	Ebb tide.	Flow tide.	At 7 a.m.	At 5 p.m.
1935.								
6th January ..	12-25	5·4	6-30	3·85	12-35	6-38	3·95	4·35
7th ,, ..	13-15	5·3	7-20	3·7	13-25	7-30	3·8	4·5
8th ,, ..	14-10	5·25	8-15	3·7	14-18	8-22	3·9	4·6
9th ,, .	15-0	5·2	9-5	3·6	15-10	9-15	4·0	4·7
10th ,, ..	15-45	5·1	9-55	3·5	15-52	10-5	4·0	4·7
11th ,, ..	16-30	5·0	10-45	3·4	16-43	10-55	4·1	4·9
12th ,, ..	17-20	4·85	11-35	3·25	17-30	11-45	4·05	4·8

B. M. on settling tank 39·49 O. M. S. L. Zero is at O. M. S. L.

Notable high and low water-levels of previous years.

		Taken at high tide.				Taken at low tide.
27th August	1906 ..	70·5		23rd February	1907 ..	51 06
5th September	1909 ..	66·86		13th ,,	1908 ..	51·06
10th August	1910 ..	69·86		12th March	1912 ..	51·06
1st ,,	1911 ..	68·46		6th ,,	1914 ..	50 60
13th ,,	1912 ..	67·16		22nd February	1915 ..	50·30
31st ,,	1915 ..	69·7		15th ,,	1916 ..	50·60
8th ,,	1916 ..	68·1		3rd March	1917 ..	51·0
12th ,,	1917 ..	67·1		21st February	1918 ..	51·40
13th ,,	1918 ..	69·12		26th ,,	1919 ..	50·4
2nd ,,	1919 ..	66·8		18th ,,	1920 ..	50·9
8th September	1920 ..	66·9		19th ,,	1921 ..	50·9
28th July	1921 ..	68·4		8th March	1922 ..	51·05
10th August	1922 ..	68·00		14th ,,	1923 ..	50·8
31st July	1923 ..	66·15		16th February	1924 ..	50·50
29th August	1924 ..	68·82		5th March	1925 ..	50·9
8th September	1925 ..	68·52		9th February	1926 ..	2·2
15th August	1926 ..	19·6		27th ,,	1927 ..	2·10
17th September	1927 ..	18·70		16th ,,	1928 ..	2·2
22nd August	1928 ..	20·0		21st ,,	1929 ..	2·0
13th July	1929 ..	17·8		24th ,,	1930 ..	2·3
12th September	1930 ..	18·65		28th ,,	1931 ..	2·2
16th August	1931 ..	21·7		18th ,,	1932 ..	1·8
6th September	1932 ..	18·5		6th ,,	1933 ..	2·10
7th ,,	1933 ..	17·80				

N. B.—Zero of the gauge at Dacca Waterworks prior to 11 a.m on the 8th January 1926 = —48·51 with reference to P. W. D. datum.

Zero of the gauge at Dacca Waterworks since 11 a.m. of the 8th January 1926 = 0·00 with reference to P. W. D. datum.

[ILLEGIBLE], *Executive Engineer,*
Khulna Division.

Khulna, the 18th January 1935.

Statement showing the gauge readings at Dacca Waterworks Station on the river Buriganga for the week ending 5th January 1935.

Date.	At highest water.		At lowest water.		Commencement of—		Remarks.	
	Time.	Reading.	Time.	Reading.	Ebb tide.	Flow tide.	At 7 a.m.	At 5 p.m.
1934.								
30th December ..	6-35	4·7	13-15	3·2	6-42	13-22	4·6	4·0
31st „ ..	7-20	4·4	14-0	2·9	7-30	14-10	4·35	3·6
1935.								
1st January ..	8-10	4·5	14-45	3·0	8-20	14-55	4·3	3·5
2nd „ ..	9-5	4·6	15-30	3·1	9-10	15-43	4·15	3·45
3rd „ ..	10-0	4·75	16-15	3·25	10-8	16-30	4·2	3·5
4th „ ..	10 50	5·0	17-0	3·5	11-0	17-10	4·3	3·5
5th „ ..	11-40	5·35	..	..	11-52	..	4·45	4·35

B. M. on settling tank 39·49 O. M. S. L. Zero is at O. M. S. L.

Notable high and low water levels of previous years.

		Taken at high tide.				Taken at low tide.
27th August	1906 ..	70·5	23rd February	1907 ..	51·06
5th September	1909 ..	66·86	13th „	1908 ..	51·06
10th August	1910 ..	69·86	12th March	1912 ..	51·06
1st „	1911 ..	68·46	6th „	1914 ..	50·60
13th „	1912 ..	67·16	22nd February	1915 ..	50·30
31st „	1915 ..	69·7	15th „	1916 ..	50·60
8th „	1916 ..	68·1	3rd March	1917 ..	51·0
12th „	1917 ..	67·1	21st February	1918 ..	51·40
13th „	1918 ..	69·12	26th „	1919 ..	50·4
2nd „	1919 ..	66·8	18th „	1920 ..	50·9
8th September	1920 ..	66·9	19th „	1921 ..	50·9
28th July	1921 ..	68·4	8th March	1922 ..	51·05
10th August	1922 ..	68·00	14th „	1923 ..	50·8
31st July	1923 ..	66·15	16th February	1924 ..	50·50
29th August	1924 ..	68·82	5th March	1925 ..	50·9
8th September	1925 ..	68·52	9th February	1926 ..	2·2
15th August	1926 ..	19·6	27th „	1927 ..	2·10
17th September	1927 ..	18·70	16th „	1928 ..	2·2
22nd August	1928 ..	20·0	21st „	1929 ..	2·0
13th July	1929 ..	17·8	24th „	1930 ..	2·3
12th September	1930 ..	18·65	28th „	1931 ..	2·2
16th August	1931 ..	21·7	18th „	1932 ..	1·8
6th September	1932 ..	18·5	6th „	1933 ..	2·10
7th „	1933 ..	17·80			

N.B.—Zero of the gauge at Dacca Waterworks prior to 11 a.m. on the 8th January 1926 = — 48·51 with reference to P. W. D. datum.

Zero of the gauge at Dacca Waterworks since 11 a.m. of the 8th January 1926 = 0·00 with reference to P. W. D. datum.

[ILLEGIBLE], for *Executive Engineer,*
Khulna Division.

Khulna, the 12th January 1935.

DISTRICT REPORTS ON WEATHER AND CROPS.

For the week ending on the 16th January 1935.

Summary.—Excepting light showers in places the weather was dry. Harvesting of winter paddy is almost over; threshing is in brisk progress. Prospects of standing crops are generally satisfactory. During the week ending Saturday, the 12th January 1935, 4,117 persons attended different relief centres and 865 persons received gratuitous relief in the distressed areas of Murshidabad. In Birbhum, 3,991 men were employed on test relief works on Saturday, the 12th January 1935. The average price of common rice for the province has fallen by about 0·18 per cent. as compared with that of the previous week.

Serial No.	District and sub-division.	Rainfall.	Price of common rice, in seers, per rupee.		Character of the weather, condition of crops, etc.
			This week.	Previous week.	
1	2	3	4	5	6
		Inches.			
1	24-Parganas ..	Nil	11½	10 $\frac{13}{16}$	Weather seasonable. No damage to crops is reported. Fodder and water are sufficient. Export and import normal. Cattle-disease exists in places.
	Diamond Harbour	Nil	14	14	
	Barrackpore ..	Nil	10½	10	
	Baraset ..	Nil	10	10	
	Basirhat ..	Nil	12½	13	
2	Nadia ..	0·15	11½	11	Weather cloudy. Export and import normal. Harvesting of sugarcane has begun. Fodder and water are sufficient. Cattle-disease exists in places.
	Kushtia ..	Nil	11½	11½	
	Meherpur ..	Nil	11	11	
	Chuadanga ..	0·20	11	11	
	Ranaghat ..	0·25	10	10	
3	Murshidabad ..	0·06	12	11½	Weather cold and cloudy. Prospects of standing crops are not favourable in Kandi subdivision. No large export or import. Stock of rice, fodder and water are sufficient. Cattle-disease is reported from Jangipur subdivision. Test relief works continue. 3,753 men, 299 women and 65 children attended relief centres during the week ending Saturday, the 12th January 1935. Number of persons receiving gratuitous relief in the distressed areas was 176, 385 and 304 in Lalbagh, Kandi and Jangipur subdivisions, respectively.
	Lalbagh ..	Nil	12	13	
	Jangipur ..	Nil	13	13	
	Kandi ..	0·09	13	13	
4	Jessore ..	0·36	11	11	Weather seasonable. Prospects of standing crops are fair. No large export or import. Fodder and water are sufficient.
	Jhenidah ..	0·04	13	13	
	Magura ..	Nil	12	12	
	Narail ..	Nil	14	14	
	Bongaon ..	0·05	10	10	
5	Khulna ..	0·10	13	13	Weather seasonable. Its effects on crops are good. Fodder and water are sufficient.
	Satkhira ..	Nil	15	15	
	Bagerhat ..	Nil	11	11	

Serial No.	District and sub-division.	Rainfall.	Price of common rice, in seers, per rupee.		Character of the weather, condition of crops, etc.
			This week.	Previous week.	
1	2	3	4	5	6
		Inches.			
6	Burdwan ..	0·10	11	11	Weather cold and cloudy. Condition of crop is not satisfactory. Fodder and water are sufficient.
	Asansol ..	1·35	10	10½	
	Katwa ..	Nil	11	12	
	Kalna ..	0·30	10	10½	
7	Birbhum ..	0·03	13	13	Weather seasonable and occasionally cloudy. Prospects of *rabi* crops are fair. Fodder and water are sufficient. 3,991 men were employed on test relief works on Saturday, the 12th January 1935.
	Rampurhat ..	Nil	11	10	
8	Bankura ..	0·00	12	12½	Weather cloudy. Threshing of winter paddy continues in some places. Stock of rice is sufficient. No large export or import. Prospects of standing crops are fair. Cattle-disease is reported from Khatra and Ranibundh police-stations.
	Vishnupur ..	0·00	11½	12½	
9	Midnapore ..	Nil	13	14	Weather seasonable. Harvesting of winter paddy is almost complete. Prospects of standing crops are fair. Fodder and water are sufficient.
	Contai ..	Nil	16	15	
	Tamluk ..	Nil	10½	10	
	Ghatal ..	Nil	12½	12½	
	Jhargram ..	Nil	13	(*n*)	
10	Hooghly ..	0·02	10½	11	Weather seasonable. Fodder and water are sufficient.
	Serampore ..	Nil	10	10	
	Arambagh ..	0·02	13	13	
11	Howrah ..	Nil	10	10	Weather seasonable; its effects are good. Harvesting of winter paddy is almost over. Fodder and water are sufficient.
	Uluberia ..	Nil	11½	11	
12	Rajshahi (Rampur Boalia).	Nil	12½	12	Weather seasonable. Harvesting of sugarcane and winter rice continues. Fodder and water are sufficient.
	Naogaon ..	Nil	13	(*n*)	
	Nator ..	Nil	12	12	
13	Dinajpur ..	Nil	15	15½	Weather seasonable. Its effects on agricultural operations are favourable. Fodder and water are sufficient.
	Thakurgaon ..	Nil	15	15	
	Balurghat ..	Nil	13 4/16	13 4/16	
14	Jalpaiguri ..	Nil	14	14	Weather not seasonable. No export or import. Fodder and water are sufficient.
	Alipur ..	Nil	14	14	

(*n*) Not reported.

Serial No.	District and sub-division.	Rainfall.	Price of common rice, in seers, per rupee.		Character of the weather, condition of crops, etc.
			This week.	Previous week.	
1	2	3	4	5	6
		Inches.			
15	Darjeeling ..	Nil	8	8	Weather favourable. Fodder and water are sufficient. Cattle-disease exists at places. Harvesting of paddy is finished in Kalimpong subdivision.
	Kurseong ..	Nil	8	8	
	Siliguri ..	Nil	13	13	
	Kalimpong ..	Nil	8	7½	
16	Rangpur ..	Nil	13	13	Weather seasonable. Prospects of standing crops are fair. Harvesting of *rabi* crops has begun. No large export or import. Fodder and water are sufficient.
	Nilphamari ..	Nil	13	13	
	Kurigram ..	Nil	13	13	
	Gaibandha ..	Nil	12	12	
17	Bogra ..	Nil	14	14	The effect of weather on agricultural operation is fair. Condition of standing crops is fair. Fodder and water are sufficient.
18	Pabna ..	0·03	10½	10½	Weather seasonable. Condition of standing crops is satisfactory. Harvesting of mustard has commenced. Fodder and water are sufficient.
	Serajganj ..	Nil	10	10	
19	Malda ..	Nil	13½	14	Weather partly seasonable and partly cloudy. Prospects of standing crops are fair. Fodder and water are available.
20	Cooch-Behar ..	Nil	15½	16	Weather seasonable. Transplantation of tobacco seedlings is finished and harvesting of winter paddy continues. Preparation of lands for jute and autumn paddy is in progress in Mecklignanj subdivision. Prospects and condition of standing crops are fair. Fodder and water are sufficient.
21	Dacca ..	Nil	12	12	Rainfall at North Sadar (Kapasia) nil. Weather seasonable. Prospects of crops are good. Fodder and water are available.
	Manikganj ..	Nil	11½	11½	
	Narayanganj ..	Nil	10½	10½	
	Munshiganj ..	Nil	12½	12½	

Serial No.	District and sub-division.	Rainfall.	Price of common rice, in seers, per rupee.		Character of the weather, condition of crops, etc.
			This week.	Previous week.	
1	2	3	4	5	6
		Inches.			
22	Mymensingh ..	Nil	11	11	Weather seasonable. Condition of crops is good. Fodder and water are available.
	Jamalpur ..	Nil	12½	13½	
	Tangail ..	Nil	10½	10½	
	Netrakona ..	Nil	12	11	
	Kishorganj ..	Nil	11	11	
23	Faridpur ..	0·34	13	13	Weather seasonable. Condition of standing crops is fair. Fodder and water are sufficient.
	Goalundo (Rajbari).	0·00	10	9½	
	Madaripur ..	0·00	13	13½	
	Gopalganj (a) ..	0·00	14	15	
24	Bakarganj (Barisal).	Nil	13	13	Weather seasonable. Prospects of standing crops are good. Fodder and water are sufficient.
	Pirojpur ..	Nil	10½	10½	
	Patuakhali ..	Nil	12	(n)	
	Dakshin Shabazpur (Bhola).	Nil	13	13	
25	Chittagong ..	Nil	12 13*	12 13*	Weather seasonable. Transplantation of *rabi* crops is in progress. Prospects are fair. Fodder and water are sufficient. Panga salt sells at 13 seers per rupee at Sadar and 12 seers per rupee at Cox's Bazar.
	Cox's Bazar ..	Nil	13	12½	
26	Tippera (Comilla)	Nil	12½	12½	Prospects of crops are fair.
	Brahmanbaria ..	Nil	11½	11½	
	Chandpur ..	Nil	13½	13½	
27	Noakhali ..	Nil	13½	13	Weather seasonable. Condition of standing *rabi* crops is fair. Fodder and water are sufficient.
	Feni ..	(n)	(n)	14	
28	Chittagong Hill Tracts.	Nil	16	14	Weather seasonable. Its effects on agricultural operations are favourable. Fodder and water are sufficient.
29	Tripura State ..	Nil	13	13½	Weather seasonable. Condition of cattle is good. Fodder and water are sufficient. Cotton sells at Rs. 11 to Rs. 15 and jute at Rs. 2-8 to Rs. 3-12 per maund.

(n) Not reported.

(a) The rainfall at Haridaspur, which is very near to Gopalganj, is shown here.

* Burma rice.

J. C. BASU, for *Director of Agriculture, Bengal.*

Dacca, the 21st January 1935.

CALCUTTA IMPROVEMENT TRUST.

Calcutta, the 16th January 1935.

Notice under section 43 of Bengal Act V of 1911 (the Calcutta Improvement Act, 1911) as amended up to 1931.

Scheme No. XLV (Howrah Bridge Approach —Dalhousie Square North to Canning Street).

The Board of Trustees for the Improvement of Calcutta hereby give notice that a Street Scheme (for the construction of a main 100′ road and subsidiary roads), namely, Scheme No. XLV, has been framed for the area bounded as follows:—

On the North—From a point on the centre line of Canning Street where it meets the northward prolongation of the eastern edge of Clive Row, running eastwards along the centre line of Canning Street to a point opposite Ezra Street.

On the East—From this point in a straight line southwards along the western edge of Ezra Street to a point opposite Parsi Church Street. Thence eastwards across Ezra Street and along the southern edge of Parsi Church Street to a point where it meets the centre line of Lower Chitpore Road. Thence southwards along the centre line of Lower Chitpore Road to the centre point of the junction of Lower Chitpore Road and Lal Bazar Street.

On the South—From this point running westwards along the centre line of Lal Bazar Street to a point opposite Lyons Range.

On the West—From this point running northwards along the western and southern edges of Lyons Range to a point opposite Royal Exchange Place. Thence northwards along the western and the southern edges of Royal Exchange Place to its junction with the eastern edge of Clive Street. From this point across Royal Exchange Place straight northwards along the eastern edge of Clive Street, thence along the eastern edge of Clive Row to the starting point.

Particulars of the scheme, map of the area comprised in the scheme and a statement of land which it is proposed to acquire and on which a betterment fee is proposed to be levied may be inspected at the offices of the Trust at No. 5, Clive Street, on week days between the hours of 11 a.m. and 4 p.m. and on Saturdays between the hours of 11 a.m. and 2 p.m.

Copies of the above documents will be delivered to the applicants on payment of following fees:—

Particulars of the scheme—As. 4.

Map of the area comprised in the scheme—Re. 1.

Statement of land proposed to be acquired and also land on which a betterment fee is proposed to be levied—As. 4.

Objections to the scheme will be received up to 30th April 1935.

C. W. Gurner, *Chairman (offg.).*

CORPORATION OF CALCUTTA.

NOTICES.

Central Municipal Office, the 16th January 1935.

It is hereby notified for general information that the Corporation of Calcutta under powers vested in them in this behalf have by a resolution, dated the 21st December 1934, prescribed the alignment of the public street running by the west and north sides of premises No. 124, Cornwallis Street in Ward 1 to a width of 12 feet.

A copy of the plan prepared in this behalf may be seen in the office of the Surveyor and Valuer of the Corporation any working day during office hours on payment of usual fees.

It is hereby notified for general information that the Corporation of Calcutta under powers vested in them in this behalf have by a resolution, dated the 21st December 1934, cancelled the alignment of the portion of Lake Road (Old Dhakuria Road) in Ward 27 between the limit of the Calcutta Improvement Trust Scheme No. XXXIII and the point where Lake Road meets the 150 feet Calcutta Improvement Trust Road, which was originally sanctioned on the 11th December 1908 by the General Committee of the Corporation as constituted under Act III (B.C.) of 1899.

It is hereby notified for general information that the Corporation of Calcutta under powers vested in them in this behalf have by a resolution, dated the 21st December 1934, modified the alignment of the portion of Hazra Lane in Ward 27 running north to south between premises Nos. 2/1, Hazra Lane and 25/B and 25/C, Hazra Lane to a width of 40 feet in place of 30 feet as sanctioned on the 9th August 1923 by the General Committee of the Corporation as constituted under Act III (B.C.) of 1899.

A copy of the plan prepared in this behalf may be seen in the office of the Chief Valuer and Surveyor of the Corporation any working day during office hours on payment of usual fees.

It is hereby notified for general information that the Corporation of Calcutta under powers vested in them in this behalf have by a resolution, dated the 21st December 1934, prescribed the alignment of Ananda Neogy Lane in Ward 1 to a width of 20 feet.

A copy of the plan prepared in this behalf may be seen in the office of the Surveyor and Valuer of the Corporation any working day during office hours on payment of usual fees.

J. C. Mukerjea,

Chief Executive Officer.

FORM C—BENGAL.

STATEMENT OF COTTON PRESSED IN THE BENGAL PRESIDENCY FOR THE WEEK ENDING THE 11th JANUARY 1935.

[Section 5(2) of the Cotton Ginning and Pressing Factories Act, 1925.]

Name of Division or block.	Number of bales pressed.				District included in the block.
	During the week.	During the corresponding week last year.	Since 1st September 1934 (the date prescribed by the Local Government as the commencement of the season).	During the corresponding period last year.	
The Bengal Presidency	217 or 216·22 bales of 400 lbs. each.	591	2,668	3,673	All districts in the Presidency.

J. B. McBRIDE,

Chief Inspector of Factories, Bengal.

Vital statistics of towns with a population of 50,000 and over of the Bengal Presidency for the week ending Saturday, the 12th January 1935.

Districts.	Nos.	Towns.	Population under registration according to Census of 1931.			Births registered		Deaths registered.																							
			Male.	Female.	Total.	Number registered (excluding still-births).	Still-births registered.	Cholera.	Small-pox.	Plague.	Cerebro-spinal meningitis.	Malaria.	Enteric fever.	Measles.	Relapsing fever.	Kala-azar.	Influenza.	Other fevers.	Dysentery.	Diarrhœa.	Pneumonia.	Phthisis.	Other respiratory diseases.	Injuries including suicide.	Deaths from child-birth.	Other causes.	Total of all causes.			Total of corresponding week of the previous year.		
																										Male.	Female.	Total.	Male.	Female.	Total.
Calcutta ..	1	Calcutta ..	814,948	381,786	1,196,734	561	44	17	9	..	14	9	14	..	..	2	17	21	39	12	90	67	103	12	3	400	463	366	829	403	301	704
Burdwan ..	2	Asansol Mining Settlement.	209,544	173,136	382,680	67	1	..	..	..	..	3	..	..	..	..	..	8	5	..	6	..	4	..	..	17	25	18	43	78	70	148
Howrah ..	3	Howrah ..	145,120	79,753	224,873	115	7	6	3	..	..	4	4	..	..	..	..	6	15	17	27	2	11	8	2	65	93	77	170	82	68	150
Dacca ..	4	Dacca ..	79,365	59,153	138,518	99	5	2	..	..	..	2	1	..	..	4	..	3	5	5	5	3	14	2	1	25	36	36	72	43	24	67
24-Parganas ..	5	Bhatpara ..	60,134	24,841	84,975	23	..	..	..	..	..	1	..	..	..	..	..	7	..	..	4	1	..	1	..	5	10	9	19	9	11	20
Chittagong ..	6	Chittagong ..	35,049	18,107	53,156	59	..	..	..	..	..	..	2	..	..	..	..	6	1	..	1	..	..	..	..	6	9	7	16	10	12	22

R. B. KHAMBATA, M.R.C.S. (ENG.), L.R.C.P. (LOND.), D.P.H. (CAMB.), *Director of Public Health, Bengal.*

Calcutta, the 18th January 1935.

Printed and published by the Superintendent, Government Printing, Bengal, at the Bengal Government Press, Alipore, Bengal, on the 24th January 1935.

Registered No. C207

The Calcutta Gazette

Extraordinary

Published by Authority

MONDAY, JANUARY 28, 1935.

GOVERNMENT OF BENGAL.

Legislative Department.

NOTIFICATION.

No. 79L.—25th January, 1935.—His Excellency the Governor having been pleased to order, under rule 18 of the Bengal Legislative Council Rules, 1920, the publication of the following five Bills, together with the Statements of Objects and Reasons which accompany them, in the *Calcutta Gazette*, the Bills with the Statements of Objects and Reasons are accordingly hereby published for general information.

THE BENGAL ELECTRICITY DUTY BILL, 1935.

A

BILL

to levy a duty on electrical energy consumed for lights and fans in Bengal.

WHEREAS it is expedient to levy a duty on electrical energy consumed for lights and fans in Bengal ;

AND WHEREAS the previous sanction of the Governor General has been obtained under sub-section (*3*) of section 80A of the Government of India Act to the passing of this Act ; 5 & 6 Geo. V, c. 61 ; 6 & 7 Geo. V, c. 37 ; 9 & 10 Geo. V, c. 101.

It is hereby enacted as follows :—

Short title, extent and commencement.

1. (*1*) This Act may be called the Bengal Electricity Duty Act, 1935.

(*2*) It extends to the whole of Bengal.

(*3*) It shall come into force on such date as the Local Government may by notification in the *Calcutta Gazette* appoint.

Definitions.

2. In this Act, unless there is anything repugnant in the subject or context, — [*Cf.* Bom. Act II of 1932, s. 4.]

(*1*) "consumer" means any person who is supplied with energy by a licensee ;

(*2*) "energy" means electrical energy when generated, transmitted, supplied or used for any purpose except the transmission of a message ;

(*3*) "licensee" means any person licensed under Part II of the Indian Electricity Act, 1910, to supply energy and includes any person who has obtained the sanction of the Local Government under section 28 of that Act ; and IX of 1910.

(*4*) "prescribed" means prescribed by rules made under this Act.

Duty on units of energy consumed.

3. There shall be charged, levied and paid to the Government of Bengal, on the units of energy consumed for the purpose of lights and fans excluding losses of energy in transmission and transformation, a duty (hereinafter referred to as "electricity duty") at the rates specified in the First Schedule : [*Cf.* Bom. Act II of 1932, s. 5.]

Provided that electricity duty shall not be leviable on the units of energy consumed by Government or by or in respect of any local authority, railway administration, tramway company, industrial undertaking, institution or class of persons specified in the Second Schedule, except to the extent specified therein.

Payment of electricity duty.

4. (*1*) Every licensee shall collect and pay to the Local Government, at the prescribed time and in the prescribed manner, the electricity duty payable under this Act on the units of energy supplied by him to consumers for the purpose of lights and fans. The duty so payable shall be a first charge on the amount recoverable by the licensee for the energy supplied by him and shall be a debt due by him to the Local Government : [*Cf.* Bom. Act II of 1932, s. 6.]

Provided that the licensee shall not be liable to pay the duty in respect of any energy supplied by him for which he has been unable to recover his dues.

The Bengal Electricity Duty Bill, 1935.

(*Clauses 5—9.*)

(*2*) Where any person fails or neglects to pay, at the prescribed time and in the prescribed manner the amount of electricity duty due from him, the licensee may, without prejudice to the right of the Local Government to recover the amount under section 7, and after giving not less than seven clear days' notice in writing to such person, cut off the supply of energy to such person ; and he may, for that purpose, exercise the power conferred on a licensee by sub-section (*1*) of section 24 of the Indian Electricity Act, 1910, for recovery of any charge or sum due in respect of energy supplied by him. IX of 1910.

(*3*) The licensee shall be entitled, for his cost of collection of the duty, to a rebate of such percentage as may be determined by the Local Government on the amount of the duty collected and paid by him under sub-section (*1*).

Licensee to keep books of account and submit returns.

5. Every licensee shall, unless he is exempt from payment of electricity duty under the proviso to section 3, keep books of account in the prescribed form and submit to the Local Government or to the prescribed officer returns in the prescribed form at the prescribed times, showing the units of energy supplied by him to each consumer or consumed by him, as the case may be, for the purpose of lights and fans and the amount of the duty payable thereon and recovered or paid by him under section 4. [*Cf.* Bom. Act II of 1932, s. 7.]

Inspecting Officers.

6. (*1*) The Local Government may, by notification in the *Calcutta Gazette*, appoint inspecting officers to inspect the books of account required by section 5 to be kept by licensees. Such officer shall perform such duties and exercise such powers as may be prescribed for the purpose of carrying into effect the provisions of this Act and the rules made thereunder. [*Cf.* Bom. Act II of 1932, s. 8.]

(*2*) Every officer appointed under this section shall be deemed to be a public servant within the meaning of section 21 of the Indian Penal Code. [*Cf.* Bom. Act V of 1922, s. 11(*3*).] XLV of 1860.

Recoveries.

7. Any sum due on account of electricity duty, if not paid at the prescribed time and in the prescribed manner, shall be recoverable, at the discretion of the Local Government, either from the consumer, or, subject to the proviso to sub-section (*1*) of section 4, from the licensee, as a public demand. [*Cf.* Bom. Act II of 1932, s. 9.]

Penalties.

8. If any person required by section 5 to keep books of account or to submit returns fails to keep such books in the prescribed form, or to submit such returns in the prescribed form at the prescribed times or obstructs an inspector appointed under section 6 in the exercise of his powers and duties under this Act and the rules made thereunder or contravenes any rule made under section 9, he shall be liable, on conviction before a Magistrate, to a fine not exceeding fifty rupees. [*Cf.* Bom. Act II of 1932, s. 10.]

Power to make rules.

9. (*1*) The Local Government may make rules to carry out the purposes of this Act. [*Cf.* Bom. Act II of 1932, s. 11.]

(*2*) In particular, and without prejudice to the generality of the foregoing power, such rules may provide for all or any of the following matters, namely :—

(*a*) the time and manner of payment of the electricity duty under section 4 ;

(*b*) the form of the books of account to be kept and the times at which, the form in which and the officer to whom the returns required by section 5 shall be submitted ;

(*c*) the duties and powers of inspecting officers ; and

(*d*) any other matter for which there is no provision or insufficient provision in this Act and for which provision is, in the opinion of the Local Government, necessary for giving effect to the provisions of this Act.

The Bengal Electricity Duty Bill, 1935.

(The First and Second Schedules.)

THE FIRST SCHEDULE.

(See section 3.)

[*Cf.* Bom. Act II of 1932, First Schedule.

RATES OF DUTY.

(*1*) In respect of all premises not falling under article (*2*).	Six pies for each unit of energy consumed.
(*2*) In respect of all premises where the supply of electricity is unmetered, for—	
	Annas per mensem.
every lamp of less than 30 watts ..	2
every lamp of 30 watts or more but less than 40	3
every lamp of 40 watts or more but less than 60	4
every lamp of 60 watts or more but not exceeding 100	6
and for every additional 15 watts or fraction thereof in excess of 100 in any lamp	1

THE SECOND SCHEDULE.

(See proviso to section 3.)

[*Cf.* Bom. Act II of 1932, Second Schedule.]

EXEMPTIONS.

(*1*) The Government, save in respect of premises used for residential purposes ;

(*2*) a railway administration as defined in clause (*6*) of section 3 of the Indian Railways Act, 1890, save in respect of premises used for residential purposes ; IX of 1890.

(*3*) a local authority, save in respect of premises used for residential purposes ;

(*4*) a tramway company, save in respect of premises used for residential and office purposes ;

(*5*) an industrial undertaking, save in respect of premises used for residential and office purposes ;

(*6*) a hospital or dispensary which is not maintained for private gain ;

(*7*) any consumer using not more than twelve units in any one month.

Explanation (*1*).—For the purposes of exemption (*5*), "industrial undertaking" means all buildings or premises wherein or within the precincts of which any manufacturing process (as defined in clause (*g*) of section 2 of the Indian Factories Act, 1934) is carried on. XXV of 1934.

The Bengal Electricity Duty Bill, 1935.

(*The Second Schedule.*)

Explanation (2).—For the purposes of exemption (7)—

(*a*) "consumer" shall be deemed to include a landlord or a person who supplies electrical energy to one or two-roomed tenements in any one building in respect of any one of which tenements not more than twelve units of energy have been used in any one month ;

(*b*) whether more than twelve units have been used in respect of any one tenement in any one month shall be determined by dividing the total number of units used in any one building by the number of tenements in that building ; and

(c) in the premises referred to in Article (2) of the First Schedule every 10 watts shall be deemed to consume one and a half units in a month.

STATEMENT OF OBJECTS AND REASONS.

The object of this Bill is to provide additional revenues for the province of Bengal in order to remove part of the existing deficit in the provincial revenues. It is proposed, subject to certain exemptions, to levy a small surcharge on electricity which is used for the purpose of lights and fans. The rates of surcharge are specified in the First Schedule. The exemptions are specified in the Second Schedule and include the exemption of persons who do not use more than 12 units of electricity in any one month. The rates of duty and the exemptions are so fixed that they will, it is believed, neither adversely affect the development of electrical facilities nor handicap the users of electricity.

Legislation on the same lines, passed in 1932, is in force in the Presidency of Bombay.

J. A. WOODHEAD,

Member-in-charge.

CALCUTTA;

The 11th January, 1935.

NOTES ON CLAUSES.

Clause 3 provides for the levy of electricity duty on the units of energy consumed for lights and fans.

Clause 4, sub-clause (1) requires in respect of energy supplied by licensee the licensee to collect and to pay to the Government electricity duty payable under this Act. Such duty shall be treated as a debt due from the licensee and shall be a first charge on the rates recoverable from consumers. A licensee is exempted from the payment of such duty, if he fails to recover his rates from the consumers.

Sub-clause (2) empowers licensees to cut off the supply of energy to any person for non-payment of electricity duty.

Sub-clause (3) enables Government to grant rebate to a licensee to meet his collection charges.

Clause 5 requires licensees to keep books of account and to submit returns to Local Government or to the prescribed officer.

Clause 6 empowers the Local Government to appoint inspecting officers to inspect books of account to be kept by licensees.

Clause 7 provides for the recovery of electricity duty as a public demand.

THE BENGAL TOBACCO (SALES LICENSING) BILL, 1935.

A

BILL

to provide for the imposition of a fee for license to sell tobacco in Bengal.

WHEREAS it is expedient to impose a fee for license to sell tobacco in Bengal;

AND WHEREAS the previous sanction of the Governor General has been obtained under sub-section (*3*) of section 80A of the Government of India Act to the passing of this Act; 5 & 6 Geo, V. c. 61; 6 & 7 Geo, V. c. 37; 9 & 10 Geo, V. c. 101.

It is hereby enacted as follows:—

Short title, extent and commencement.

1. (*1*) This Act may be called the Bengal Tobacco (Sales Licensing) Act, 1935.

(*2*) It extends to the whole of Bengal.

(*3*) It shall come into force in such areas on such dates as the Local Government may, by notification in the *Calcutta Gazette*, direct.

Definitions.

2. In this Act, unless there is anything repugnant in the subject or context,— [*Cf.* Ben. Act V of 1909, s. 2(*5*).]

(*1*) "Collector" means—

(*i*) in the Calcutta District, as defined in clause (*4*) of section 2 of the Bengal Excise Act, 1909, the person appointed under clause (*b*) of sub-section (*2*) of section 7 of that Act to exercise all the powers and to perform all the duties of the Collector in that district, and Ben. Act V of 1909.

(*ii*) elsewhere, the chief officer in charge of the revenue administration of the district;

(*2*) "Excise Commissioner" means the officer appointed under clause (*a*) of sub-section (*2*) of section 7 of the Bengal Excise Act, 1909; [*Cf.* Ben. Act V of 1909, s. 2(*8*).]

(*3*) "Excise Officer" means the Collector or any officer or other person appointed or invested with powers under section 7 of the Bengal Excise Act, 1909; [*Cf.* Ben. Act V of 1909, s. 2(*9*).]

(*4*) "prescribed" means prescribed by rules made under this Act;

(*5*) "sale," with its grammatical variations and cognate expressions, includes the supply of tobacco by clubs, societies or other similar institutions to their members or constituents on payment of any subscription, fee, price or other valuable consideration;

(*6*) "tobacco" means the leaves and stalks of the tobacco plant and includes any preparation or admixture thereof which is intended for the purpose of smoking or chewing or for use as snuff.

Wholesale and retail sale of tobacco.

3. (*1*) A person shall be deemed to sell tobacco wholesale when he sells to any one person, at any one transaction, or within the prescribed period of time, a quantity of any of the articles mentioned in the first column of the Schedule which is in excess of the quantity mentioned in the corresponding item in the second column of the said schedule.

The Bengal Tobacco (Sales Licensing) Bill, 1935.

(*Clauses 4—8.*)

(*2*) The Local Government may, by notification in the *Calcutta Gazette*, alter, delete or add to all or any of the items in the second column of the schedule, and any such alteration, deletion or addition shall take effect as if it had been made by this Act ; [*Cf.* Act XIX of 1925, s. 8(*3*).]

(*3*) A person shall be deemed to sell tobacco retail when he sells tobacco otherwise than wholesale.

Prohibition of wholesale and retail sale of tobacco or exposing or keeping of tobacco for sale without license.

4. No person shall sell wholesale or retail, or for the purpose of sale, expose or keep, any tobacco except under a license granted under section 5 and in conformity with the conditions of such license :

Provided that a person who grows tobacco himself or with the aid of members of his family or by hired labour may, without such a license, sell wholesale or retail, or, for the purpose of sale, expose or keep, any tobacco so grown by him :

Provided further that the Local Government or the prescribed authority may, subject to the prescribed conditions, exempt any person from taking out such a license.

License to sell and to expose or keep for sale.

5. (*1*) The prescribed authority may, on the application of any person, and on payment of the prescribed fee, grant to such person a license for all or any of the purposes referred to in section 4.

(*2*) Every such license shall be in the prescribed form and contain the prescribed particulars and shall be granted for the prescribed period and subject to the prescribed conditions.

Penalty for contravention of section 4.

6. (*1*) Whoever sells, or, for the purpose of sale, exposes or keeps, tobacco in contravention of section 4 shall be punished with fine which may extend to one hundred rupees.

(*2*) When any person is convicted under this section, the Court may direct that he shall pay, in addition to the fine imposed on him, the fee payable for the license which he should have obtained under this Act and such sum shall be recoverable as if it were a fine imposed on him under sub-section (*1*).

Penalty for breach of condition of license.

7. Whoever, being the holder of a license under this Act commits a breach of any of the conditions subject to which the license was granted shall be punished with fine which may extend to one hundred rupees.

Power to compound offence.

8. (*1*) The Collector, or any Excise Officer not below the rank of Superintendent of Excise specially empowered by the Local Government in this behalf, may accept from any person who is reasonably suspected of having committed any offence punishable under this Act, payment of a sum of money not exceeding one hundred rupees by way of composition for such offence and in all cases in which any tobacco has been seized as being liable to confiscation under this Act may release the same on payment of any sum not exceeding the value thereof as estimated by the Collector or such Excise Officer, as the case may be.

(*2*) If the payment by way of composition is accepted under sub-section (*1*), the accused person, if in custody, shall be discharged and no further proceedings shall be taken against him. If tobacco seized is released on payment under sub-section (*1*), it shall not be liable to confiscation for the offence on account of which it was seized.

The Bengal Tobacco (Sales Licensing) Bill, 1935.

(Clauses 9—14.)

Power to issue search-warrant.

9. If any Collector, or any Magistrate, empowered under section 19 to try offences punishable under this Act or the Excise Commissioner, or any Excise Officer not below the rank of Superintendent of Excise specially empowered by the Local Government in this behalf, upon information received, and after such inquiry (if any) as he thinks necessary, has reason to believe that any offence punishable under this Act has been or is likely to be committed, he may issue a warrant to search for and to seize any tobacco in respect of which such offence may have been, or is likely to be, committed together with any receptacle, package or covering in which such tobacco may be found and any document which throws or is likely to throw any light on the alleged offence. [*Cf.* Ben. Act V of 1909, s. 69.]

Information and aid to Excise Officer.

10. (*1*) Every police officer who is aware of any contravention of any provision of this Act shall be bound to give immediate information of such contravention to the prescribed Excise Officer in the prescribed manner. [*Cf.* Ben. Act V of 1909, s. 71.]

(*2*) Every police officer and every village *chaukidar* and *dafadar*, shall, upon request made by any Excise Officer, be bound to give reasonable aid to such Excise Officer in giving effect to the provisions of this Act or of any rule, notification or order made, issued, or given thereunder.

Powers of entry and inspection.

11. Any of the following officers, namely :—

(*a*) the Excise Commissioner, or

(*b*) the Collector, or

(*c*) any Excise Officer not below the prescribed rank,

may, subject to the prescribed restrictions enter at any time during which the same may be open, any place in which any tobacco is exposed or kept for the purpose of sale by a person holding a license under this Act, and examine any accounts or registers maintained in such place.

Power to arrest without warrant, to seize tobacco and to make searches.

12. The Collector, or any Magistrate, or the Excise Commissioner, or any Excise Officer specially empowered by the Local Government in this behalf, may, subject to the prescribed restrictions, [*Cf.* Ben. Act V of 1909, s. 67.]

(*a*) arrest without warrant any person whom he has reason to believe to have committed any offence punishable under section 6 ; and

(*b*) seize and detain any article which he has reason to believe to be liable to confiscation under this Act.

Power to issue warrant of arrest.

13. The Collector, or any Magistrate empowered under section 19 to try offences punishable under this Act or the Excise Commissioner, or any Excise Officer not below the rank of Superintendent of Excise specially empowered by the Local Government in this behalf may issue a warrant for the arrest of any person whom he has reason to believe to have committed any offence punishable under this Act. [*Cf.* Ben. Act V of 1909, s. 68.]

Things liable to confiscation.

14. Subject to the provisions of sub-section (*2*) of section 8, any tobacco in respect of which any offence punishable under this Act has been committed, and any receptacle, package or covering in which such tobacco is found, shall be liable to confiscation. [*Cf.* Ben. Act V of 1909, s. 63.]

The Bengal Tobacco (Sales Licensing) Bill, 1935.

(Clauses 15—17.)

Confiscation by Magistrate or Collector.

15. (*1*) When, in any case tried by him, a Magistrate decides that any article is liable to confiscation under section 14, he may either order confiscation or give the owner of such tobacco an option to pay, in lieu of confiscation, such fine as the Magistrate thinks fit. [*Cf.* Ben. Act V of 1909, s. 64.]

(*2*) Whenever any article is liable to confiscation under section 14, and the offender or the person entitled to possession is not known or cannot be found, the Collector shall either himself inquire into the case or cause an inquiry to be made into it by a person authorized by him in this behalf. The case shall thereafter be determined by the Collector who may order confiscation :

Provided that no such order shall be made until the expiration of two months from the date of seizing the article intended to be confiscated, or without hearing any person who may claim any right thereto and the evidence (if any) which he produces, in support of his claim :

Provided further that, if the article in question is liable to speedy and natural decay, or if the Collector is of opinion that its sale would be for the benefit of its owner, the Collector may, at any time, direct it to be sold and the provisions of this sub-section shall, as nearly as may be practicable, apply to the net proceeds of the sale.

Power to Collector and certain Excise Officers to investigate offences.

16. The Collector, or the Excise Commissioner, or any Excise Officer specially empowered by the Local Government in this behalf may, without the order of a Magistrate, investigate any offence punishable under this Act which a Court having jurisdiction over the local area within the limits of the Collector's jurisdiction, or over the local area to which such Excise Officer is appointed, as the case may be, would have power to inquire into or try under the provisions of Chapter XV of the Code of Criminal Procedure, 1898, relating to the place of inquiry or trial. [*Cf.* Ben. Act V of 1909, s. 73.] V of 1898.

Powers and duties of Collector and certain Excise Officers investigating offences.

17. (*1*) The Collector, or the Excise Commissioner, or any Excise Officer empowered under section 16, may, after recording in writing his reason for suspecting the commission of an offence which he is empowered to investigate, exercise any of the powers conferred upon a police officer making an investigation, or upon an officer in charge of a police-station by sections 160 to 171 of the Code of Criminal Procedure, 1898, and the said provisions of the said Code shall, subject to the prescribed restrictions or modifications, apply accordingly. [*Cf.* Ben. Act V of 1909, s. 74.]

(*2*) Subject to the prescribed restrictions, the Collector, or the Excise Commissioner, or any Excise Officer empowered under section 16, may, without reference to a Magistrate, and for reasons to be recorded by him in writing, stop further proceedings against any person concerned, or supposed to be concerned, in any offence which he or any Excise Officer subordinate to him has investigated.

(*3*) For the purposes of section 156 of the Code of Criminal Procedure, 1898, the area to which an Excise Officer empowered under section 16, is appointed shall be deemed to be a police-station, and such officer shall be deemed to be the officer in charge of such station.

(*4*) As soon as an investigation by the Collector, or the Excise Commissioner, or by an Excise Officer empowered under section 16, has been completed, if it appears that there is sufficient evidence to justify the forwarding of the accused to a magistrate, the investigating officer, unless he proceeds under sub-section (*2*), or under section 8, shall submit a report (which shall, for the purpose of section 190 of the Code of Criminal Procedure, 1898, be deemed to be a police report) to a Magistrate having jurisdiction to inquire into or try the case and empowered to take cognizance of offences on police reports.

The Bengal Tobacco (Sales Licensing) Bill, 1935.

(Clauses 18—22.)

Security and bail.

18. (*1*) Whenever any person arrested under this Act is prepared to furnish bail he shall be released on furnishing bail to the satisfaction of the officer releasing him, or, at the discretion of such officer, on his own bond. [*Cf.* Ben. Act V of 1909, s. 75(*4*) and (*5*).]

(*2*) Any Excise Officer not below the prescribed rank may release persons on bail or on their own bond.

(*3*) The provisions of sections 498 to 502, 513, 514, 514A, 514B and 515 of the Code of Criminal Procedure, 1898, shall apply, so far as may be, in every case in which bail is accepted or a bond taken under this section. V of 1898.

Magistrates having jurisdiction to try offences.

19. No Magistrate other than— [*Cf.* Ben. Act V of 1909, s. 82.]

(*a*) a Presidency Magistrate, or

(*b*) a Magistrate whose powers are not less than those of a Magistrate of the second class, or

(*c*) a Magistrate of the third class specially empowered by the District Magistrate in this behalf,

shall try any offence punishable under this Act.

Initiation of proceedings.

20. No Magistrate shall take cognizance of an offence punishable under this Act except on his own knowledge or suspicion, or on the complaint or report of an Excise Officer or an officer empowered by the Local Government in this behalf. [*Cf.* Ben. Act V of 1909, s. 83.]

Production of articles seized and persons arrested.

21. (*1*) Articles seized under the warrant of the Collector, and, unless security for their appearance before the Collector be taken, persons arrested under such a warrant, shall be produced before the Collector. [*Cf.* Ben. Act V of 1909, s. 76.]

(*2*) Articles seized, and persons arrested, under this Act by persons or officers not having authority to release arrested persons on bail or on their own bond shall be produced before or forwarded to—

(*a*) the Collector or an Excise Officer empowered under section 16 to investigate the case, or

(*b*) the nearest Excise Officer who has authority to release arrested persons on bail or on their own bond.

(*3*) When a person arrested is produced before an Excise Officer who has authority to release arrested persons on bail or on their own bond, such officer shall forward such person to, or take security for his appearance before, the Collector or an Excise Officer empowered under section 16 to investigate the case.

(*4*) When any article seized cannot conveniently be conveyed before an officer referred to in sub-section (*1*) or sub-section (*2*), as the case may be, the person making the seizure shall place the said article in some place of safety and shall forthwith report the seizure to such an officer.

Custody by Police of articles seized.

22. All officers in charge of police-stations shall take charge of and keep in safe custody, pending the orders of a Magistrate, or of the Collector, or of the Excise Commissioner, or of an Excise Officer empowered under section 16 to investigate the case, all articles seized under this Act which may be delivered to them ; and shall allow any Excise Officer who may accompany such articles to the police-station, or who may be deputed for the purpose by an official superior, to affix his seal to such articles. [*Cf.* Ben. Act V of 1909, s. 77.]

The Bengal Tobacco (Sales Licensing) Bill, 1935.

(Clauses 23—28.)

Reports of arrests, seizures and searches.

23. When any Excise Officer below the rank of Collector makes, or receives information of, any arrest, seizure or search under this Act, he shall, within twenty-four hours thereafter, make a full report of all the particulars of the arrest, seizure or search, or of the information received, to the Collector, and to the Excise Officer (if any) empowered under section 16 to investigate the case within the local limits of whose jurisdiction the arrest, seizure or search was made. [*Cf.* Ben. Act V of 1909, s. 78.]

Execution of Collector's warrants.

24. Any warrant issued by the Collector may be executed by any officer selected by the Collector for the purpose : [*Cf.* Ben. Act V of 1909, s. 79.]

Provided that no warrant issued by the Collector for execution in any area in which the administration of the Police is vested in the Commissioner of Police shall be executed by any police officer who is subordinate to the said Commissioner, unless it is endorsed by a police officer empowered by the Local Government in this behalf.

Maximum period of detention.

25. (*1*) No person arrested under this Act shall be detained in custody for a longer period than in all the circumstances of the case is reasonable ; and such period shall not exceed twenty-four hours, exclusive of the time necessary for the journey from the place of arrest to the place where a Collector or an Excise Officer empowered under section 16 to investigate the case may be, and thence to the Court of a Magistrate having jurisdiction to inquire into or try the case. [*Cf.* Ben. Act V of 1909, s. 80.]

(*2*) A Magistrate to whom an accused person is forwarded under section 167 of the Code of Criminal Procedure, 1898, by a Collector or an Excise Officer empowered under section 16 to investigate the case may exercise the powers conferred upon a Magistrate by the said section 167. V of 1898.

Application of certain provisions of the Code of Criminal Procedure, 1898.

26. (*1*) Save as otherwise expressly provided in this Act, the provisions of the Code of Criminal Procedure, 1898, relating to arrests, detentions in custody, searches, summonses, warrants of arrests, search-warrants and production of persons arrested shall apply, so far as may be, to arrests, detentions and searches made, summonses and warrants issued, and the production of persons arrested under this Act. [*Cf.* Ben. Act V of 1909, s 81.]

(*2*) For the purposes of the said provisions of the said Code, both the Collector and any Excise Officer not below the rank of Superintendent of Excise specially empowered by the Local Government in this behalf shall be deemed to be a Court.

(*3*) Officers to whom a Collector's warrant is directed or endorsed, and officers (other than Collectors), making arrests, detentions, searches or seizures under this Act shall, for the purposes of the said provisions of the said Code, be deemed to be police officers.

Indemnity.

27. No suit, prosecution or legal proceeding whatever shall lie against any person in respect of anything in good faith done or intended to be done under this Act.

Control, appeal and revision.

28. (*1*) The Collector shall, in all proceedings under this Act, be subject to the control of the Excise Commissioner, and shall, in such matters as the Local Government may direct, be subject also to the control of the Commissioner of the Division. [*Cf.* Ben. Act V of 1909, s. 8.]

(*2*) Orders passed under this Act or under any rule made hereunder shall be appealable in prescribed cases to the prescribed authorities under the prescribed procedure.

(*3*) The Local Government may revise any order passed by the Collector, the Commissioner of the Division or the Excise Commissioner.

The Bengal Tobacco (Sales Licensing) Bill, 1935.

(Clause 29, the Schedule.)

Power to make rules.

29. (*1*) The Local Government may, subject to the condition of previous publication, make rules for carrying out the purposes of this Act.

(*2*) In particular and without prejudice to the generality of the foregoing power the Local Government may make rules prescribing—

(*a*) the period of time referred to in sub-section (*1*) of section 3 ;

(*b*) the authority by which, and the conditions subject to which, persons may be exempted from taking out a license ;

(*c*) the authority which may grant, and the fees payable in respect of, licenses ;

(*d*) the form of licenses, the particulars to be contained therein, and the conditions subject to which, and the period for which, licenses may be granted ;

(*e*) the Excise Officers to whom, and the manner in which, information shall be given under section 10 ;

(*f*) the rank of Excise Officers referred to in clause (*c*) of section 4 and sub-section (*2*) of section 18 ;

(*g*) the restrictions subject to which the powers conferred by sections 11 and 12 and sub-section (*2*) of section 17 shall be exercised ;

(*h*) the restrictions and modifications referred to in sub-section (*1*) of section 17 ;

(*i*) the cases in which and the authority to whom appeals shall lie under sub-section (*2*) of section 28 and the procedure for such appeals ; and

(*j*) the quantity of tobacco referred to in item (*n*) of the second column of the Schedule.

THE SCHEDULE.

[*See section 3(1)*.]

1	2
(*a*) Tobacco leaves or stalks ..	.. Twenty seers.
(*b*) Ball tobacco ..	.. One maund.
(*c*) Cigarettes ..	.. One thousand.
(*d*) *Biris* ..	.. One thousand.
(*e*) Cigars or cheroots ..	.. Two hundred and fifty.
(*f*) Pipe tobacco ..	.. Six pounds.
(*g*) Cigarette tobacco ..	.. Six pounds.
(*h*) *Jarda* ..	.. One seer.
(*i*) *Dokta* ..	.. One seer.
(*j*) *Surti* ..	.. One seer.
(*k*) *Gul* ..	.. One seer.
(*l*) *Gundi* ..	.. One seer.
(*m*) Snuff ..	.. One seer.
(*n*) Any other kind of tobacco	.. The prescribed quantity.

STATEMENT OF OBJECTS AND REASONS.

The object of this Bill is to provide additional revenues for the province of Bengal in order to remove part of the existing deficit in the provincial revenues.

The Bill requires licenses to be taken out for the sale of tobacco and enables Government to levy fees for such licenses, but expressly provides that cultivators of tobacco may sell the produce of their cultivation without taking out a license.

The fees which it is proposed to levy are as follows :—

(*a*) Wholesale licenses—Rs. 6 per annum.

(*b*) Retail licenses—Rs. 3 per annum.

(*c*) Hawkers' licenses—Re. 1 per annum.

Laws are already in force in the provinces of Bombay and the Punjab for the levy of license fees on the sale of tobacco.

J. A. WOODHEAD,

Member-in-charge.

CALCUTTA ;

The 11th January, 1935.

NOTES ON CLAUSES.

Clause 3 defines persons who shall be deemed to sell tobacco wholesale and retail.

Clause 4 requires that every person who is a wholesale or retail dealer in tobacco shall take out a license, but it permits cultivators of tobacco to sell their own produce without license. It also provides that the Local Government may exempt any person from taking out a license.

Clause 5 provides for the grant of licenses for the sale of tobacco.

Clause 8 provides for the composition of offences under the Act.

Clauses 9, 10 and 12 to 20 and 28 provide the procedure for dealing with offences under the Act. They are based on the provisions of the Bengal Excise Act, 1909.

Clause 11 empowers certain officers, subject to prescribed restrictions, to enter any place in which tobacco is exposed or kept for sale.

THE COURT-FEES (BENGAL AMENDMENT) BILL, 1935.

A

BILL

further to amend the Court-Fees Act, 1870.

WHEREAS it is expedient to amend the Court-fees Act, 1870, in its application to Bengal in the manner hereinafter appearing ; VII of 1870.

AND WHEREAS the previous sanction of the Governor General has been obtained under sub-section (*3*) of section 80A of the Government of India Act to the passing of this Act ; 5 & 6 Geo. V, c. 61 ; 6 & 7 Geo. V, c. 37 ; 9 & 10 Geo. V, c. 101.

It is hereby enacted as follows :—

Short title, extent and commencement.

1. (*1*) This Act may be called the Court-fees (Bengal Amendment) Act, 1935.

(*2*) It extends to the whole of Bengal.

(*3*) It shall come into force on such date as the Local Government may, by notification in the *Calcutta Gazette*, appoint.

Application of Act.

2. The Court-fees Act, 1870, hereinafter referred to as the said Act, shall, in its application to Bengal, be amended in the manner hereinafter provided.

Amendment of Schedule I, Article 8.

3. In Article 8 of the first schedule to the said Act, for the figures "1879" in the first column the figures "1899" shall be substituted.

Amendment of Schedule I, Article 11.

4. In Article 11 of the first schedule to the said Act,—

(*a*) after the words "in excess of a lakh of rupees" in the second column the words "up to two lakhs and fifty thousand rupees" shall be inserted ;

(*b*) in the second and third columns, before the proviso in the second column, the following shall be inserted, namely :—

"and

when such amount or value exceeds two lakhs and fifty thousand rupees, on the portion of such amount or value which is in excess of two lakhs and fifty thousand rupees up to three lakhs of rupees,	Five and a half per centum.
and	
when such amount or value exceeds three lakhs of rupees, on the portion of such amount or value which is in excess of three lakhs of rupees up to four lakhs of rupees,	Six per centum.
and	
when such amount or value exceeds four lakhs of rupees, on the portion of such amount or value which is in excess of four lakhs of rupees up to five lakhs of rupees,	Six and a half per centum.
and	
when such amount or value exceeds five lakhs of rupees on the portion of such amount or value which is in excess of five lakhs of rupees ; "	Seven per centum.

and

(*c*) in the proviso for the words and figures "the Succession Certificate Act, 1889" the words and figures "the Indian Succession Act, 1925" shall be substituted.

The Court-Fees (Bengal Amendment) Bill, 1935.

(*Clause 5.*)

Substitution in Schedule I of new Article 12.

5. For Article 12 of the first schedule to the said Act the following article shall be substituted, namely :—

"12. Certificate under the Indian Succession Act, 1925.	When the amount or value of any debt or security specified in the certificate under section 374 of the Act exceeds one thousand rupees,	Two per centum on the first ten thousand rupees, three per centum on the next forty thousand rupees, four per centum on the next fifty thousand rupees, five per centum on the next one lakh and fifty thousand rupees, five and a half per centum on the next fifty thousand rupees, six per centum on the next one lakh of rupees, six and a half per centum on the next one lakh of rupees,
	and	and
		seven per centum on the remainder of such amount or value.
	When the aggregate amount or value of any debts or securities specified in the certificate and of any debts or securities to which the certificate has been extended under section 376 of the Act exceeds one thousand rupees.	In respect of such portion of the aggregate amount or value as consists of the amount or value of debts or securities so specified, the fee hereinbefore provided in that behalf in this article
		and
		three per centum on such portion of the first ten thousand rupees, four and a half per centum on such portion of the next forty thousand rupees, six per centum on such portion of the next fifty thousand rupees, seven and a half per centum on such portion of the next one lakh and fifty thousand rupees, eight and a quarter per centum on such portion of the next fifty thousand rupees, nine per centum on such portion of the next one lakh of rupees, nine and three-quarters per centum on such portion of the next one lakh of rupees, and ten and a half per centum on such portion of the remainder of such aggregate amount or value as consists of the amount or value of debts or securities to which the certificate has been extended. *Note.*—(*1*) The amount of a debt is its amount, including interest on the day on which the inclusion of the debt in the certificate is applied for, so far as such amount can be ascertained. (*2*) Whether or not any power with respect to a security specified in a certificate has been conferred under the Act and where such a power has been so conferred, whether the power is for the receiving of interest or dividends on, or for the negotiation or transfer of the security, or for both purposes, the value of the

The Court-Fees (Bengal Amendment) Bill, 1935.

(*Clause 6.*)

security is its market-value on the day on which the inclusion of the security in the certificate is applied for, so far as such value can be ascertained."

Amendment of Schedule II, Article 18.

6. In Article 18 of the second schedule to the said Act, for the words and figures "section 326 of the Code of Civil Procedure" the words and figures "paragraph 17 of the second schedule to the Code of Civil Procedure, 1908" shall be substituted.

STATEMENT OF OBJECTS AND REASONS.

The object of this Bill is to provide additional revenues for the province of Bengal in order to remove part of the existing deficit in the provincial revenues. It is proposed to effect this by raising the court-fees payable on—

(*a*) Probates of a Will or Letters of Administration with or without a Will annexed, and

(*b*) Certificates under Part X of the Indian Succession Act, 1925,

when the amount or value of the property in case (*a*) or of the debt or security specified in the certificate in case (*b*) exceeds rupees two lakhs and fifty thousand.

2. The opportunity is taken at the same time to amend certain references to other enactments in the First and Second Schedules to the Act which are now out of date.

J. A. WOODHEAD,

Member-in-charge.

CALCUTTA,

The 11th January, 1935.

THE BENGAL AMUSEMENTS TAX (AMENDMENT) BILL, 1935.

A

BILL

to amend the Bengal Amusements Tax Act, 1922.

WHEREAS it is expedient to amend the Bengal Amusements Tax Act, 1922, in the manner hereinafter appearing ; Ben. Act V of 1922.

It is hereby enacted as follows :—

Short title and commencement.

1. (*1*) This Act may be called the Bengal Amusements Tax (Amendment) Act, 1935.

(*2*) It shall come into force on such date as the Local Government may, by notification in the *Calcutta Gazette*, appoint.

Amendment of section 3 of Bengal Act V of 1922.

2. In section 3 of the Bengal Amusements Tax Act, 1922—

(*1*) in sub-section (*1*) the words and figures "as from the first day of April, 1922" shall be omitted ;

(*2*) in sub-section (*2*) for the words "eight annas" the words "three annas" shall be substituted ;

(*3*) in sub-section (*3*) for item (*i*) the following items shall be substituted, namely :—

"(*i*) is more than three annas but is not more than four annas.....half an anna,

(*ia*) is more than four annas but is less than twelve annas.....one anna"; and

(*4*) sub-section (*5*) shall be omitted.

STATEMENT OF OBJECTS AND REASONS.

The object of this Bill is to provide additional revenues for the province of Bengal in order to remove part of the existing deficit in the provincial revenues. It is proposed to effect this by placing an amusements tax on certain low-priced tickets of admission that are at present exempt from the amusements tax, namely—

(*a*) by extending the tax of 1 anna (which at present applies to tickets of admission whose cost exceeds 8 annas but does not exceed 12 annas) so that it is payable also on tickets whose cost exceeds 4 annas, and

(*b*) by imposing an amusements tax of half-an-anna on tickets of admission whose cost exceeds 3 annas but does not exceed 4 annas.

J. A. WOODHEAD,

Member-in-charge.

CALCUTTA:

The 6th January, 1935.

THE INDIAN STAMP (BENGAL AMENDMENT) BILL, 1935.

A

BILL

further to amend the Indian Stamp Act, 1899.

WHEREAS it is expedient to increase the revenues of Bengal and for that purpose further to amend the Indian Stamp Act, 1899, in its application to Bengal, in the manner hereinafter appearing ; II of 1899.

AND WHEREAS the previous sanction of the Governor General has been obtained under sub-section (*3*) of section 80A of the Government of India Act, to the passing of this Act ; 5 & 6 Geo. V, c. 61 ; 6 & 7 Geo. V, c. 37 ; 9 & 10 Geo. V, c. 101.

It is hereby enacted as follows :—

Short title, extent and commencement.

1. (*1*) This Act may be called the Indian Stamp (Bengal Amendment) Act, 1935.

(*2*) It extends to the whole of Bengal.

(*3*) It shall come into force on such date as the Local Government may, by notification in the *Calcutta Gazette*, appoint.

Application of Act.

2. The Indian Stamp Act, 1899, hereinafter referred to as the said Act, shall, in its application to Bengal, be amended in the manner hereinafter provided.

Amendment of section 4.

3. In sub-section (*1*) of section 4 of the said Act, for the words " one rupee eight annas " the words " two rupees " shall be substituted.

Amendment of section 6.

4. In the proviso to section 6 of the said Act, for the words " one rupee eight annas " the words " two rupees " shall be substituted.

Amendment of sections 6A, 29A, 48A and the heading of Schedule 1A.

5. In sections 6A, 29A, 48A and the heading of Schedule 1A of the said Act, after the figures " 1922 " wherever they occur, the words, brackets and figures " or the Indian Stamp (Bengal Amendment) Act, 1934 " shall be inserted.

Amendment of section 28.

6. In the proviso to sub-section (*4*) of section 28 of the said Act, for the words " one rupee " the words " two rupees " shall be substituted.

Amendment of Schedule 1A.

7. In Schedule 1A of the said Act, the following amendments shall be made, namely :—

(*1*) in Article No. 2 for the words and figures " under section 256 of the Indian Succession Act, 1865, section 6 of the Government Savings Banks Act, 1873, section 78 of the Probate and Administration Act, 1881, or section 9 or section 10 of the Succession Certificate Act, 1889 " in the first column, the words and figures " under section 6 of the Government Savings Banks Act, 1873, or section 291 or section 375 or section 376 of the Indian Succession Act, 1925 " shall be substituted,

The Indian Stamp (Bngal Amendment) Bill, 1935.

(Clause 7.)

(*2*) in Article No. 5,—

(*a*) for the entry " Three annas " in the second column opposite clause (*a*), the entry " Four annas " shall be substituted,

(*b*) for clause (*b*) the following clause shall be substituted, namely :—

"(*b*)—

(*i*) if relating to the sale of a Government security ; ..	Subject to a maximum of twenty rupees, two annas for every Rs. 10,000 or part thereof, of the value of the security.
(*ii*) if relating to the sale of a share in an incorporated company or other body corporate ;	Two annas for every Rs. 5,000 or part thereof, of the value of the share", and

(*c*) for the entry " Twelve annas " in the second column opposite clause (*c*), the entry " One rupee " shall be substituted ;

(*3*) in Article No. 8, for the entry "Seven rupees eight annas" in the second column opposite clause (*b*) the entry "Ten rupees" shall be substituted ;

(*4*) in Article No. 9, for the entry "Seven rupees eight annas" in the second column the entry "Ten rupees" shall be substituted ;

(*5*) for Article No. 10 the following Article shall be substituted, namely :—

"10. ARTICLES OF ASSOCIATION OF A COMPANY—

(*a*) where the nominal share capital does not exceed one lakh of rupees	Fifty rupees.
(*b*) where the nominal share capital exceeds one lakh of rupees ..	One hundred rupees.

Exemption.

Articles of any association not formed for profit and registered under section 26 of the Indian Companies Act, 1913. *See also* Memorandum of Association of a Company (No. 39)" ; VII of 1913.

(*6*) in Article No. 12, for the entry "Seven rupees eight annas" in the second column opposite clause (*b*) the entry "Ten rupees" shall be substituted ;

(*7*) in Article No. 14, for the entry "Six annas" in the second column the entry "Eight annas" shall be substituted ;

(*8*) in Article No. 15, in the second column—

(*a*) for the entry "One rupee fourteen annas" the entry "Two rupees four annas",

(*b*) for the entry "Two rupees eight annas" the entry "Three rupees", and

(*c*) for the entry "Three rupees two annas" the entry "Three rupees twelve annas",

shall be substituted ;

The Indian Stamp (Bengal Amendment) Bill, 1935.

(Clause 7.)

(*9*) in Article No. 18,—

(*i*) for the entry " Three annas " in the second column opposite clause (*a*) the entry " Four annas ", and

(*ii*) for the entry " Six annas " in the second column opposite clause (*b*) the entry " Eight annas ",

shall be substituted ;

(*10*) in Article No. 22, for the entry "Twelve rupees eight annas" in the second column the entry " Twenty rupees " shall be substituted ;

(*11*) in Article No. 24,—

(*i*) for the entry " Twelve annas " in the second column opposite clause (*i*) the entry " One rupee", and

(*ii*) for the entry " One rupee eight annas " in the second column opposite clause (*ii*) the entry " Two rupees",

shall be substituted ;

(*12*) in Article No. 25,—

(*i*) in clause (*a*) for the words " one rupee eight annas " in the first column, the words " two rupees ", and

(*ii*) for the entry " One rupee eight annas " in the second column opposite clause (*b*) the entry " Two rupees",

shall be substituted ;

(*13*) in Article No. 29, for the entry "Two rupees" in the second column the entry "Five rupees" shall be substituted ;

(*14*) in Article No. 38, for the entry " Twelve rupees eight annas " in the second column the entry " Fifteen rupees " shall be substituted ;

(*15*) in Article No. 39, for clause (*b*) the following clause shall be substituted, namely :—

" (*b*) if not so accompanied—

(*i*) where the nominal share capital does not exceed one lakh of rupees	..	Eighty rupees.
(*ii*) where the nominal share capital exceeds one lakh of rupees	..	One hundred and thirty rupees " ;

(*16*) in Article No. 40, for the entry " Twelve annas " in the second place where it occurs in the second column opposite clause (*c*) the entry " One rupee " shall be substituted ;

(*17*) in Article No. 41,—

(*i*) for the entry "One and a half annas" in both places where it occurs in the second column opposite clause (*a*) the entry "Two annas", and

(*ii*) for the entry "Three annas" in both places where it occurs in the second column opposite clause (*b*) the entry "Four annas",

shall be substituted ;

The Indian Stamp (Bengal Amendment) Bill, 1935.

(*Clause 7.*)

(*18*) in Article No. 43,—

(*i*) for the entry " Three annas " in the second column opposite clause (*a*) the entry " Four annas " shall be substituted, and

(*ii*) for clause (*b*) the following clauses shall be substituted, namely :—

" (*b*) of any stock or marketable security exceeding in value twenty rupees but not being a Government security ;	Two annas for every Rs. 5,000 or part thereof of the value of the stock or security.
'(*c*) of a Government security	Subject to a maximum of twenty rupees, two annas for every Rs. 10,000 or part thereof of the value of the security" ;

(*19*) in Article No. 45, in provisos (*a*) and (*c*) in the second column for the words " twelve annas " the words " one rupee " shall be substituted ;

(*20*) in Article No. 48,—

(*i*) for the entry " Twelve annas " in the second column opposite clause (*a*) the entry " One rupee ",

(*ii*) for the entry " One rupee eight annas " in the second column opposite clause (*c*) the entry " Two rupees ",

(*iii*) for the entry " Seven rupees eight annas " in the second column opposite clause (*d*) the entry " Ten rupees",

(*iv*) for the entry " Fifteen rupees " in the second column opposite clause (*e*) the entry " Twenty rupees ", and

(*v*) for the words " One rupee eight annas " in the second column opposite clause (*g*) the words " Two rupees ",

shall be substituted ;

(*21*) in Article No. 55, for the entry " Seven rupees eight annas " in the second column opposite clause (*b*) the entry " Ten rupees " shall be substituted ;

(*22*) in Article No. 57, for the entry " Seven rupees eight annas " in the second column opposite clause (*b*) the entry " Ten rupees " shall be substituted ;

(*23*) in Article No. 58, for the words, brackets and figures " Bottomry Bond (No. 16)" in both places where they occur in the second column opposite clauses A and B, the words, brackets and figures " Conveyance (No. 23)" shall be substituted ;

(*24*) in Article No. 62, for the entry " Seven rupees eight annas " in the second column opposite clause (*c*) (*ii*) the entry " Ten rupees " shall be substituted ; and

(*25*) in Article No. 65, for the entry " Six annas " in the second column the entry " Eight annas " shall be substituted.

STATEMENT OF OBJECTS AND REASONS.

The object of this Bill is to provide additional revenues for the province of Bengal in order to remove part of the existing deficit in the provincial revenues. It is proposed to effect this by varying the rates of stamp duties as in the Bill.

2. Opportunity is taken at the same time to amend certain references to other enactments in Schedule IA of the Act which are now out of date.

J. A. WOODHEAD,
Member-in-charge.

CALCUTTA ;
The 11th January, 1935.

A. deC. WILLIAMS,
Secy. to the Govt. of Bengal.

PRESS COMMUNIQUE.

1. In order to supplement the revenues of Bengal, whose budgets since 1930-31 have shown large deficits, the Central Legislature voted in March last a grant to this province equal to half the net proceeds of the export duty on jute grown within her boundaries. The grant voted last year was for the year 1934-35, and its renewal for the ensuing year remains within the discretion of the Central Government and Legislature.

2. In connection with this grant the Hon'ble the Finance Member of the Government of India in his budget speech and in his speech during the general debate on the budget in the Legislative Assembly made the following statements:—

"While our financial position has been maintained in the sound manner which I have described, we have to recognise that the financial position in India is not merely a question of the Central Government budget, but that provincial finances also closely concern us. Not only does the Central Government at present act as the banker to the provinces, holding their balances and providing funds to meet their capital expenditure and deficits, but we have also in these days to consider our policy with some regard to the various proposals for Federal finance which are such an important part in the constitutional plan. I am not suggesting that we can in any way anticipate the new constitutional proposals, the form of which is still subject to consideration by the British Parliament, nor that we can attempt to take upon our shoulders the responsibility for dealing with the problems of Provincial Governments. There is, however, one case which has stood out in all the enquiries and proposals as requiring some special action, and that is the case of Bengal. The need for some special help has been recognised in the White Paper, and the Government of India is also prepared to accept a similar conclusion. At the same time if any action is to be taken, it is right that something should be done without delay, because Bengal has been since 1930 incurring deficits at the rate of about two crores per annum, and its debt on this account is piling up to figures which may become really unmanageable. If we are prepared to take account of this, and ask the Central Legislature to support us in raising funds to help Bengal, we can only fairly claim to be satisfied that the Bengal Government and Legislature are doing all that is possible to help themselves. Everything which I have to propose is subject to this condition."

* * * * *

"I must add a few words as to the significance in relation to Bengal of the proposal to render it possible to surrender part of the jute duty. I have already stated that it is necessary to stipulate, and indeed we feel sure that we shall be supported in this view by the Legislature and particularly by those who represent other provinces, that if the special assistance, out of what are under the present constitution Central funds, is to be given, it is fair that we should satisfy ourselves that the Government of Bengal is taking every possible measure on its own account to restore financial equilibrium. On the other hand the present proposal is, as I have already stated on several occasions, only intended as a provisional proposal. It is not intended to be a permanent commitment, nor do we intend to take the line that it is to be regarded as a full and final settlement of the Bengal Government's financial position. Further enquiries will have to be made before any such settlement could be reached, nor can it be reached until the constitutional plan is determined by the British Parliament. There are several difficult points involved, amongst which I must mention the treatment of the debt which has already accrued against Bengal as a result of budget deficits which have been incurred since 1930."

* * * *

"But the position is this, and I want the House to be very clear about this, because this is the issue which is before the House. We, as the Government of India, having given a very careful consideration to the position, had come to the conclusion that the position of the Bengal Government was such that it could not be expected, by its own efforts, to be able to restore financial equilibrium. That is the whole basis of our proposals and we feel that, in their position, the Bengal Government is in a special position, and that there is no province in India to-day which is in a comparable position. Now, that being our conclusion, the position was this. The Bengal Government was incurring deficits at the rate of almost 2 crores a year. They were piling up a debt which, as I said in my budget speech, would soon have reached unmanageable figures. Our position as the banker of that Government must have been this. We ought to have said to them either 'We cannot go on advancing you money to meet your deficits, you must put your house in order,' or 'we must recognise the fact that you yourselves are unable to put your house in order, and, therefore, we must try and devise some means to help you.' We felt that in any case the position, as it was, could not be allowed to continue: and as we had been convinced that they were unable to restore their own position in present conditions, we felt that the time had come when we must put forward some proposal which would enable us to bring it within the bounds of possibility that they could help themselves to fill up the remainder of the gap."

3. The condition laid down by the Hon'ble the Finance Member was endorsed by the Central Legislature, and the grant of an amount equivalent to one-half of the jute export duty was voted (for the year 1934-35) on the understanding that it would not be paid unless the Government of India were satisfied that the Bengal Government and the

Bengal Legislature were doing all that was possible to help themselves. The position at that time was as follows:—

	Rs.
Deficit on revenue account in the Bengal Estimates for the year 1934-35	2,09,22,000
Estimated amount of half the net proceeds of the jute Export duty	1,67,00,000
Reduced deficit	42,22,000

Final figures for the Budget Estimates for the year 1935-36 are not yet available; but the preliminary figures disclose no improvement in the revenue position, and the problem of balancing the budget in the year 1935-36 is very much the same as it was in the year 1934-35.

4. When a Government's expenditure exceeds its revenue, in order to effect adjustment, it must either retrench its expenditure or increase its taxation, or do both. Assisted by a Retrenchment Committee which they appointed in 1932, the Bengal Government have exhaustively considered the possibilities of retrenchment and measures for the reduction of expenditure have been adopted wherever retrenchment was considered feasible without seriously affecting the efficiency of the administration. The effect of those measures was analysed in the speech given by the Hon'ble the Finance Member when introducing the budget estimates for 1934-35 in the Legislative Council. His analysis showed that on a true comparison of the expenditure on revenue account in 1929-30 with that in 1933-34 the aggregate reduction in expenditure effected was no less than Rs. 94¾ lakhs. Since then, rules have issued revising the scales of pay for the large majority of the services and posts under the rule-making power of the local Government, and their effect will be a saving eventually of approximately Rs. 45 lakhs per annum.

5. Apart from (*a*) an enhancement in registration fees, and (*b*) the introduction of a provincial tax on motor vehicles the proceeds of which, being earmarked for additional expenditure on communications, do not however relieve the revenue position, no additional taxation has been imposed in Bengal since the year 1922. The position as regards taxation has accordingly been examined, both generally and with particular reference to measures taken in other provinces, and the local Government have decided to introduce certain taxation Bills at the ensuing session of the Legislative Council. The additional revenues expected from these Bills will not completely fill the gap between revenue and expenditure that will remain after receipt of one-half of the jute export duty, but they will considerably reduce it.

This decision does not mean that the Government of Bengal have abandoned either their claim that the jute export duty should be a provincial source of revenue or their claim for an adjustment to cover the excess of expenditure over receipts on revenue account that has accumulated since 1930-31. On the contrary, they will continue to press those claims, and they are satisfied that the case which they intend to put forward will certainly not be weakened by the adoption of the measures now proposed.

6. The taxation measures which it has been decided to place before the legislature have been published in the Gazette. They are—

	Estimated yield in a full year. Rs.
(*a*) The Bengal Electricity Duty Bill, 1935	10 lakhs.
(*b*) The Bengal Tobacco (Sales Licensing) Bill, 1935	5 ,,
(*c*) The Court Fees (Bengal Amendment) Bill, 1935	3½ ,,
(*d*) The Indian Stamp (Bengal Amendment) Bill, 1935	4 ,,
(*e*) The Bengal Amusements Tax (Amendment) Bill, 1935 ..	2 ,,
Total ..	24½ ,,

7. *The Bengal Electricity Duty Bill, 1935.*—Legislation on the lines of this Bill has been in force in the Presidency of Bombay since 1932. The Bill provides, subject to certain exemptions, for the levy of a surcharge on electricity used for the purpose of lights and fans. The surcharge proposed is 6 pies per unit of energy. This is the surcharge in force in the Presidency of Bombay. The exemptions include Government, Railway Administrations and Local authorities, save in respect of premises used for residential purposes; Tramway Companies and all places or premises wherein any manufacturing process [as defined in clause (*g*) of section 2 of the Indian Factories Act, 1934] is carried on, save in respect of premises used for residential and office purposes; hospitals and dispensaries which are not maintained for private gain; and all consumers using not more than 12 units in any one month.

8. *The Bengal Tobacco (Sales Licensing) Bill, 1935.*—This Bill requires licences to be taken out for the sale of tobacco, but expressly provides that cultivators of tobacco may sell the produce of their own cultivation without taking out a licence. The Bill places no restrictions whatsoever on the sale by the cultivator of tobacco grown by himself or with the aid of the members of his family or by hired labour.

The fees which it is proposed to levy are modest:—

	Rs.
(*a*) Wholesale licences ...	6 per annum.
(*b*) Retail licences ...	3 per annum.
(*c*) Hawker's licences ...	1 per annum.

Tobacco is subject to internal taxation in most countries of the world and in several parts of India. In the city of Bombay a system of taxation has been in force since the year 1857. Under this system all tobacco imported into the town of Bombay and intended for consumption therein is subject to a town duty of Rs. 30 a maund levied at bonded warehouses, and retail sale is permitted under licence on payment of a nominal fee of Re. 1 per annum. In French India the privilege of vend of tobacco is sold by auction, and the site of each

shop is defined in the licence. In Portuguese India a licence fee is charged for wholesale and retail vend. In the State of Travancore cultivation of tobacco is prohibited, and a duty is levied on tobacco entering the State. In the State of Cochin cultivation is prohibited, and both wholesale and retail shops are sold by auction.

In 1933 the Bombay (District) Tobacco Bill was passed into law. This law, which applies to the whole of the Presidency of Bombay except the City of Bombay, requires licences to be taken out for the sale of tobacco and provides for the levy of licence fees on both wholesale and retail vend. A similar measure was passed into law in the Punjab in 1934. The Punjab Act, which also requires licences to be taken out for the sale of tobacco, extends to municipalities, notified areas, small towns, cantonments and railway stations and not to the whole province.

9. *The Court-Fees (Bengal Amendment) Bill, 1935.*—The Bill provides for a higher court-fee than that now levied on Probates, Letters of Administration and Certificates under the Indian Succession Act, 1925, when the value of the property or the amount of the debt exceeds Rs. 2,50,000. The rates in the Bill have been in force in the Presidency of Bombay since 1932.

10. *The Indian Stamp (Bengal Amendment) Bill, 1935.*—This Bill provides for an increase in the rates of certain stamp duties. The rates proposed are, with one exception, in force in one or more of the other provinces.

11. *The Bengal Amusements Tax (Amendment) Bill, 1935.*—Under the Bengal Amusements Tax Act tickets of admission not exceeding 8 annas are not liable to the Amusements tax. The Bill provides for the imposition of a tax on tickets costing more than 3 annas. The tax proposed is half an anna on tickets above 3 annas and not exceeding 4 annas and one anna on tickets exceeding 4 annas and not exceeding 12 annas. At present tickets exceeding 8 annas and not exceeding 12 annas are liable to a tax of one anna. Amusement taxes on tickets exceeding 4 annas are in force in the Presidencies of Madras and Bombay.

12. It will be seen that throughout their proposals Government have been at pains to avoid imposing any further charge on the resources of the really poor man.

Printed and published by the Superintendent, Government Printing, Bengal Government Press, Alipore, Bengal, on the 28th January 1935.

Registered No. C207

No. 5 of 1935

The Calcutta Gazette

Published by Authority

THURSDAY, JANUARY 31, 1935.

CONTENTS:

	Page.
Part I.—Orders and Notifications by the Governor of Bengal, the Government of Bengal, the High Court, Government Treasury, etc.	163—207
Part IA.—Orders and Notifications by the Government of India republished for general information	19—20
Part IB.—Educational Notices ..	249—277
Part II.—Advertisements	107—117
Part III.—Acts of the Bengal Legislative Council	*Nil*
Part IV.—Bills introduced in the Bengal Legislative Council, Reports of Select Committees presented or to be presented to that Council, and Bills published before introduction in that Council ..	*Nil*
Part V.—Acts of the Indian Legislature assented to by the Governor-General and Ordinances promulgated under sect 72 of the Government of India Act ..	*Nil*
Part VI.—Bills introduced in the Council of State and Legislative Assembly, Reports of Select Committees presented to the Council and Assembly and Bills published under rule 18 of the Indian Legislative Rules	*Nil*
Supplement No. 5.:—	
Cotton Ginning and Pressing—Monthly Return of Vital Statistics—Daily Rainfall—Calcutta Improvement Trust Notices—Corporation of Calcutta Notice—Weekly Weather and Crop Report—Prices-current ..	177—208
Final Forecast of the Sugarcane Crop of Bengal, 1934-35	209—211
Weekly gauge readings	212—213

PART I

Orders and Notifications by the Governor of Bengal, the Government of Bengal, the High Court, Government Treasury, etc.

Orders by the Government of Bengal.

No. 759A.

Appointments and Transfers.

General.

Tippera.—No. 551A.—21st January 1935.—The orders of the 22nd December 1934, transferring Maulvi Salamatulla Chaudhuri, Sub-Deputy Collector, Tippera, to the Brahmanbaria subdivision of that district, are cancelled.

Tippera.—No. 553A.—21st January 1935.—Maulvi Abdul Qadir, Deputy Magistrate and Deputy Collector, on probation, Tippera, is transferred to the Brahmanbaria subdivision of that district.

Presidency-Chittagong Divisions.—No. 705-A.—26th January 1935.—Mr. H. J. Twynam, C.I.E., I.C.S., Commissioner of the Presidency Division, is appointed to be Commissioner of the Chittagong Division.

Police.

Murshidabad.—No. 673A.—24th January 1935.—Babu Bankim Chandra Das Gupta, Deputy Superintendent of Police, Murshidabad, is appointed to act, until further orders, as Superintendent of Police of that district.

24-Parganas.—No. 699A.—26th January 1935.—Mr. W. H. Bemrose, I.P., Assistant Superintendent of Police, was posted to the headquarters station of the 24-Parganas district from the 12th January to the 17th January 1935, inclusive.

Calcutta.—No. 713A.—26th January 1935.—Babu Bhujendra Nath Sarkar, Inspector of Police, is appointed to act as Deputy Superintendent of Police in the Intelligence Branch, C. I. D., with effect from the afternoon of the 1st December 1934.

Leave.

GENERAL.

Noakhali.—No. 590A.—22nd January 1935.—Babu Kumaresh Ray, Deputy Magistrate and Deputy Collector, Noakhali, is allowed leave on average pay for three months, under rule 81 (*b*) (*ii*) of the Fundamental Rules, with effect from the date on which he may be relieved.

Faridpur.—No. 642A.—23rd January 1935.—In modification of the orders of the 8th December 1934, Maulvi Nuruddin Ahmad, No. II, Sub-Deputy Collector, Gopalganj, Faridpur, is allowed leave on average pay, under rule 81 (*b*) (*ii*) of the Fundamental Rules, from the 3rd December 1934 to the 31st January 1935, inclusive.

Noakhali.—No. 659A.—24th January 1935.—Mr. A. Whittaker, I.C.S., officiating Magistrate and Collector, Noakhali, was allowed leave on average pay for two days, viz., the 2nd and the 3rd January 1935, under rule 81 (*b*) (*i*) of the Fundamental Rules.

No. 690A.—25th January 1935.—Babu Dhirendra Nath Khan, Sub-Deputy Collector, is allowed leave on average pay for six weeks, under rule 81 (*b*) (*ii*) of the Fundamental Rules, in extension of the leave granted to him under the orders of the 8th December 1934.

POLICE.

No. 686A.—25th January 1935.—Mr. P. E. S. Finney, I.P., was allowed leave on average pay for eight months, under rule 81(*b*)(*i*) of the Fundamental Rules, with effect from the 16th March 1934.

E. N. BLANDY,

Chief Secy. to the Govt. of Bengal (offg.).

POLICE DEPARTMENT.

NOTIFICATIONS.

Rangpur-Jalpaiguri.—No. 314Pl.—31st January 1935.—In exercise of the power conferred by section 4(*l*) (*s*) of the Code of the Criminal Procedure, 1898 (Act V of 1898), and in modification of all previous notifications published in the *Calcutta Gazette* relating to the area included in the Hatibandha police-station in the district of Rangpur and to the boundaries of that area, the Governor in Council is pleased to declare that the chit lands specified in the following schedule, which have hitherto been included in that police-station, shall be included in the Patgram police-station in the district of Jalpaiguri :—

Thak Chak No. of chit lands.	Name of village to which appertains.	General J. L. No. of thana Kaliganj.	Remarks.
3, 4, 8, 9, 10, 11, 12, 13, 14, 16, 17, 19, A and B	Bara Saradubi ..	13	All these chit lands are situated within the village "Sibram," J. L. No. 56, police-station Patgram, district Jalpaiguri.
6	Gotamari ..	24	

Rangpur-Dinajpur.—No. 315Pl.—31st January 1935.—In exercise of the power conferred by section 4(*l*) (*s*) of the Code of the Criminal Procedure, 1898 (Act V of 1898), and in modification of all previous notifications published in the *Calcutta Gazette* relating to the area included in the Saidpur police-station in the district of Rangpur and to the boundaries of that area, the Governor in Council is pleased to declare that the chit lands specified in the following schedule, which have hitherto been included in that police-station, shall be included in the Parbatipur police-station in the district of Dinajpur :—

Thak Chak No. of chit lands.	Name of village to which appertains.	General J. L. No. of thana Nilphamari.	Remarks.
8, 10, 11, 16, 17, 18, 20, 21, 22, 23, 24, 25, 26, 27, 28, 29, 35, 46, 51, 53, 54 and 55.	Lakshanpur ..	101	All these chit lands are situated within the village "Belaichandi," J. L. No. 3, police-station Parbatipur, district Dinajpur.
1, 2, 3, 4, 5 and 6 ..	Ditto ..	101	All these chit lands are situated within the village "Raghunathpur," J. L. No. 41, police-station Parbatipur, district Dinajpur.
4 ..	Ditto ..	101	This chit land is situated within the village "Harirampur," J. L. No. 6, police-station Parbatipur, district Dinajpur.
4 ..	Ditto ..	101	This chit land is situated within the village "Rampur," J. L. No. 37, police-station Parbatipur, district Dinajpur.

Rangpur-Dinajpur.—No. 316Pl.—31st January 1935.—In exercise of the power conferred by section 4(*l*) (*s*) of the Code of the Criminal Procedure, 1898 (Act V of 1898), and in modification of all previous notifications published in the *Calcutta Gazette* relating to the area included in the Saidpur police-station in the district of Rangpur and to the boundaries of that area, the Governor in Council is pleased to declare that the chit land specified in the following schedule, which has hitherto been included in that police-station shall be included in the Chirirbandar police-station, in the district of Dinajpur :—

Thak Chak No. of chit land.	Name of village to which appertains.	General J. L. No. of thana Nilphamari.	Remarks.
B* ..	Baradaha ..	87	This chit land is situated within mauza "Chak Bhola," J. L. No. 652, police-station Chirirbandar, district Dinajpur.

*Thak is not available.

Dinajpur-Rangpur.— No. 317Pl.—31st January 1935.—In exercise of the power conferred by section 4(*l*) (*s*) of the Code of Criminal Procedure, 1898 (Act V of 1898), and in modification of all previous notifications published in the *Calcutta Gazette* relating to the area included in the Parbatipur police-station in the district of Dinajpur and to the boundaries of that area, the Governor in Council is pleased to declare that the chit lands specified in the following schedule, which have hitherto been included in that police-station, shall be included in the Saidpur police-station in the district of Rangpur :—

Thak Chak No. of chit lands.	Name of village to which appertains.	General J. L. No. of thana Parbatipur.	Remarks.
A* ..	Harirampur ..	6	This chit land is situated on the south-west corner of village "Saidpur," J. L. No. 99, police-station Saidpur, district Rangpur. *Thak is not available.
1, 2, 3, 4, 5, 6, 7 and 8	Belaichandi ..	3	All these chit lands are situated within the village "Bangalipur," J. L. No. 100, police-station Saidpur, district Rangpur.
1, 2, 3, 4, 5, 6, 7, 8, 9, 10, 11, 12, 13, 14, 15, 16, 17 and 18.	Ditto ..	3	All these chit lands are situated within the village "Lakshanpur," J. L. No. 101, police-station Saidpur, district Rangpur.

Jalpaiguri-Rangpur.—No. 318Pl.—31st January 1935.—In exercise of the power conferred by section 4(*l*) (*s*) of the Code of the Criminal Procedure, 1898 (Act V of 1898), and in modification of all previous notifications published in the *Calcutta Gazette* relating to the area included in the Patgram police-station in the district of Jalpaiguri and to the boundaries of that area, the Governor in Council is pleased to declare that the chit lands specified in the following schedule, which have hitherto been included in that police-station, shall be included in the Hatibandha police-station in the district of Rangpur :—

Thak Chak No. of chit lands.	Name of village to which appertains.	General J. L. No. of thana Patgram.	Remarks.
1 ..	Sibram ..	56	This chit land is situated within village "Dalalpara," J. L. No. 11, police-station Hatibandha, district Rangpur.
2 ..	Ditto ..	56	This chit land is situated within the village "Ramaniganj," J. L. No. 10, police-station Hatibandha, district Rangpur.
5 ..	Ditto ..	56	This chit land is situated within the village "Dolapara," J. L. No. 15, police-station Hatibandha, district Rangpur.
7 and 8 ..	Ditto ..	56	These two chit lands are situated within the village "Purba Fakirpara," J. L. No. 14, police-station Hatibandha, district Rangpur.
10, 11, 12, 13 and 14	Ditto ..	56	All these chit lands are situated within the village "Bara Saradubi," J. L. No. 13, police-station Hatibandha, district Rangpur.
15, 16 and 17 ..	Sibnath ..	59	These chit lands are situated within village "Bara Saradubi," J. L. No. 13, police-station Hatibandha, district Rangpur.
18, 20 and 22 ..	Ditto ..	59	These chit lands are within village "Purba Fakirpara," J. L. No. 14, police-station Hatibandha, district Rangpur.
2 ..	Jamgram ..	57	This chit land is within village "Thengjhara," J. L. No. 1, police-station Hatibandha, district Rangpur.
1 ..	Kuchhibari ..	23	Ditto.

Jalpaiguri-Rangpur.—No. 319Pl.—31st January 1935.—In exercise of the power conferred by section 4(*l*) (*s*) of the Code of the Criminal Procedure, 1898 (Act V of 1898), and in modification of all previous notifications published in the *Calcutta Gazette* relating to the area included in the Debiganj police-station in the district of Jalpaiguri and to the boundaries of that area, the Governor in Council is pleased to declare that the chit land specified in the following schedule, which has hitherto been included in that police-station, shall be included in the Nilphamari police-station in the district of Rangpur :—

Thak Chak No. of chit land.	Name of village to which appertains.	General J. L. No. of thana Boda.	Remarks.
45 ..	Sonahar ..	327	This chit land is situated within village "Gorgram," J. L. No. 4, police-station Nilphamari, district Rangpur.

E. N. BLANDY,
Chief Secy. to the Govt. of Bengal (offg.).

No. 436Pl.—31st January 1935.—In exercise of the powers conferred by section 11 of the Indian Motor Vehicles Act, 1914 (VIII of 1914), the Governor in Council is pleased to make the following rules in supersession of the rules regulating the use of motor vehicles in places in the Bengal Presidency other than Calcutta (including suburbs) and the Municipality of Howrah, published under notification No. 12667P., dated the 3rd October 1917, as amended from time to time.

E. N. BLANDY,
Chief Secy. to the Govt. of Bengal (offg.).

Rules to regulate the use of Motor Vehicles in places in the Bengal Presidency other than Calcutta (including suburbs) and the Municipality of Howrah.

Part I.—Preliminary.

1. (*a*) *Short title.*—These rules may be called the Bengal Motor Vehicles Rules, 1935.

(*b*) *Extent.*—These rules extend to the whole of Bengal Presidency excluding Calcutta, its suburbs and the Municipality of Howrah.

(*c*) *Date of commencement.*—These rules shall come into force on the first day of April 1935.

2. *Definitions.*—In these rules—

Act.

(*1*) the "Act" means the Indian Motor Vehicles Act, 1914 (VIII of 1914);

Approved.

(*2*) "approved" means approved by the District Magistrate;

Axle-weight.

(*3*) "axle-weight" means the aggregate weight transmitted to the surface of the road or other base whereon a heavy motor car or trailer moves or rests by the several wheels attached to that axle when the car or trailer is laden;

(*4*) "registered axle-weight" means the axle-weight of the axle of a heavy motor car as registered by the District Magistrate in pursuance of the rules contained in Part III of these rules;

Conductor.

(*5*) "conductor" means every person, except the driver, authorised by the motor owner, who attends upon the passengers in a motor omnibus or motor stage carriage;

Diameter.

(*6*) the expression "diameter" when used in relation to a wheel of a heavy motor car, means the diameter measured between the two opposite points in the outer surface of the tyre which are farthest apart;

Form.

(*7*) "form" means a form appended to these rules;

Licence.

(*8*) "private licence" means a licence granted to a person who drives his own car or who drives without remuneration of any kind;

(*9*) "professional licence" means a licence granted to a person who earns his living by driving or who drives for hire, wages or remuneration;

Magistrate.

(*10*) "Magistrate of the district" and "District Magistrate" include an Additional District Magistrate, a Subdivisional Magistrate, or any other Magistrate who may be specially authorised by the District Magistrate to carry on the work under the Act and the rules thereunder;

Motor car.

(*11*) "motor car" includes all motor vehicles other than motor cycles, road-rollers and vehicles which run on rails;

(*12*) "heavy motor car" means a motor car exceeding two tons in weight when unladen and includes a motor lorry whether it exceeds two tons in weight when unladen or not;

(*13*) "light motor car" means a motor car not exceeding two tons in weight when unladen but excludes a motor lorry;

(*14*) "motor lorry" means a motor vehicle which is ordinarily used for the carriage of goods;

Motor cycle.

(*15*) "motor cycle" means a motor vehicle running on not more than three wheels and weighing not more than eight hundred-weights;

Owner.

(*16*) "owner" means the person registered as such by the District Magistrate and includes a person having the use of a motor vehicle under a hiring or hire-purchase agreement;

Public Service Vehicles.

(*17*) "public service vehicles" include—

(*a*) "motor cab" *i.e.*, a light motor car which stands or plies for hire in any public place and has seating accommodation for not more than seven persons inclusive of the driving staff;

(*b*) "motor omnibus" or "motor stage carriage", *i.e.*, a motor vehicle (not being a motor cab) which carries passengers for hire or reward, and has seating accommodation for more than seven persons inclusive of the driving staff;

Tractor.

(*18*) "tractor" means a mechanically propelled vehicle which draws but is not so constructed as to be capable of carrying or having superimposed upon it any load except such as is necessary for its propulsion and equipment;

Trailer.

(*19*) "trailer" means a vehicle drawn or intended to be drawn by a motor car;

Tyre.

(*20*) "pneumatic tyre" means a tyre—

(*i*) provided with a continuous closed chamber containing air at a pressure substantially exceeding atmospheric pressure when the tyre is in the condition in which it is normally used, but is not subjected to any load;

(*ii*) capable of being inflated by the driver of the vehicle without removal from the wheel or vehicle; and

(*iii*) such that when it is deflated and is subjected to a normal load the sides of the tyre collapse;

Weight.

(*21*) the expression "weight" when used in relation to a heavy motor car or a trailer, means—

(*a*) when the car or trailer is unladen, the weight of the vehicle, including all parts, equipments, stores, fuel, water and accumulator which are necessary for, or are ordinarily used with, the car or trailer when working, provided that where alternative parts or bodies are used, the heaviest shall be taken for the purpose of calculating the weight; and

(*b*) when the car or trailer is laden, its weight when unladen *plus* its full lawful load, including the weight of the driver;

Width.

(*22*) the expression "width" when used in relation to the tyre of a wheel of a heavy motor car, means the distance measured horizontally and in a straight line across the rim of the wheel and between the two points in the outer surface of tyre which are farthest apart.

Part IA.—General.

3. (*a*) Every applicant for a licence under these rules shall make a true statement of all particulars set forth in the appropriate prescribed application form.

(*b*) No person to whom a reference shall be made in relation to such application for a licence shall wilfully or knowingly make any misrepresentation.

Part II.—General Rules.

Registration.

4. (*1*) No motor vehicle shall be used unless it is registered by the District Magistrate under these rules in a register kept in Form A appended to these rules. Every motor vehicle registered elsewhere in British India under rules framed under the Act, or in an Indian State which has been granted reciprocity in matters of licensing and registration, shall be deemed to have been registered under these rules:

Provided that no heavy motor car or public service vehicle shall be used in any district without the permission of the District Magistrate concerned.

(*2*) Every application for registration shall be in Form B appended to these rules and shall contain a correct declaration of the particulars referred to therein.

(*3*) Every application for registration of a motor vehicle shall be made to the Magistrate of the district in which the car is to be used.

(*4*) All motor vehicles shall be produced for inspection at the time of registration and renewal of registration before the District Magistrate or any person appointed by him in this behalf:

Provided that the District Magistrate may, in his discretion, dispense with the production at the time of registration of a motor tractor used solely for agricultural purposes.

(*5*) The owner or person in charge of a motor vehicle or trailer shall cause it to be produced for registration or inspection at such time and place as the District Magistrate, or any officer duly authorised by him, may appoint.

Registration and other fees.

(*6*) The fee payable in respect of registration shall be—

(*a*) Rs. 4 for a motor cycle,

(*b*) Rs. 16 for a light motor car, a motor cab or a motor omnibus,

(*c*) Rs. 32 for a heavy motor car, a motor lorry or a motor tractor, and

(*d*) Rs. 32 for a general number.

A duplicate registration certificate may be issued on payment of Rs. 2.

Condition of registration.

5. (*1*) The District Magistrate shall not register, or renew the registration of, any motor vehicle unless he is satisfied that the requirements of these rules in respect thereof have been duly met.

(*2*) On the registration of each motor vehicle a certificate of registration in respect thereof shall be granted by the District Magistrate.

Temporary cancellation or suspension of registration.

(*3*) If the District Magistrate, at any time after a motor vehicle has been registered, has reason to believe that it has ceased in any respect to conform to these rules, or that it is not maintained in such a condition as to prevent danger to the public, he may, after notice to the owner, direct that the registration be cancelled or suspended until the defects are remedied to his satisfaction.

Registration certificate.

6. (*1*) The owner shall receive from the District Magistrate a certificate of registration in the form of a book to be called the "Registration Certificate" in respect of each motor vehicle registered. Such book shall be in Form C appended to these rules.

The owner of the motor vehicle shall keep the registration certificate and shall produce it on reasonable notice being given to him by any Officer in charge of a police-station. He shall surrender it to the District Magistrate when the registration of the motor vehicle is suspended or cancelled.

If the owner transfers the motor vehicle to another person, he shall hand over the registration certificate to the transferee.

Change of ownership.

(*2*) Where there is a change of ownership of a motor vehicle, the transferee shall, within fourteen days of such transfer, produce it for inspection and shall cause it to be registered afresh. He shall produce or cause to be produced before the District Magistrate his application for fresh registration together with the registration certificate of the previous owner and satisfactory proof of transfer.

Change of classification.

(*3*) When a motor vehicle is transferred from one class to another, it shall be produced for inspection and registered afresh, on payment of the prescribed fee for registration :

Provided that in the case of a vehicle transferred, from a class for which a lesser fee is chargeable to a class for which a greater fee is chargeable, or from a class not subject to annual renewal of registration to a class subject to such renewal, the difference in such fees, or the annual renewal fee, shall be charged in addition to the fee of Rs. 2.

Duration of registration.

7. (*1*) (*a*) The registration of public service vehicles, motor lorries and motor tractors shall remain in force, unless previously cancelled or suspended, for twelve months from the date of registration and shall be subject to annual renewal. The registration of motor vehicles other than public service vehicles, motor lorries and motor tractors

shall remain in force until cancelled, or suspended. On change of ownership or on transfer from one class to another, the registration of all vehicles is deemed to be cancelled:

Provided that the registration of motor tractors used solely for agricultural purposes shall remain in force until cancelled or suspended or until there is change of their ownership.

(*b*) An application for the renewal of the registration of a motor vehicle must be made in Form D appended to these rules.

Renewal fees.

(*2*) The fee for the renewal of registration of—

(*a*) a public service vehicle shall be Rs. 8,

(*b*) a heavy motor car, a motor lorry or a motor tractor shall be Rs. 16,

if the application for renewal is made before the expiry of the registration, a permit to be used temporarily as a registration certificate being issued during the pendency of the application and being returned on delivery of registration certificate. If the application is made after the date of expiry, the fee shall be Rs. 16 in the case of (*a*) or Rs. 32 in the case of (*b*):

Provided that no fee shall be charged for the renewal of registration of motor vehicles owned by district boards, municipalities, union boards or any other local authorities notified in this behalf by the local Government and exclusively used for the work of the aforesaid local authorities.

NOTE.—If the date of expiry falls on a Sunday or on a holiday or on a day when the office of the District Magistrate is closed, such date of expiry shall be deemed to be the next working day on which that office is open for the transaction of business.

(*3*) A fee of Rs. 32 shall be payable annually for a general number.

Ownership or possession.

8. Every transfer of ownership and every transfer of possession of a motor vehicle to—

(*i*) a mortgagee in possession,

(*ii*) a hire purchaser,

(*iii*) a hirer who hires such motor vehicle for a period exceeding 30 days at a time,

(*iv*) a person who takes a loan of such motor vehicle for a period exceeding 30 days at a time,

(*v*) a person who, for any reason, undertakes the custody of a vehicle for a period exceeding 30 days at a time;

shall be reported to the District Magistrate both by the registered owner and by the transferee within seven days of such transfer with particulars of the address of the transferee.

Change of address of owner or possessor.

9. (*1*) When the registered owner or temporary possessor of a motor vehicle changes his address within the district, he shall report the new address to the District Magistrate within fourteen days.

(*2*) Should the registered owner of a motor vehicle change his address, he shall, within fourteen days of taking up his residence at his new address, inform in writing the registering authority of the locality in which his new address is situated, of such change of address giving particulars of the registered number of the vehicle.

He shall also inform the registering authority of the locality from which he has changed his address.

This rule shall not apply to owners—

(*i*) who simply tour the country and do not change their home address, or

(*ii*) who temporarily reside elsewhere than at the address entered in the certificate of registration for a period not exceeding four months.

For the purpose of this rule, the expression "registered owner" includes any person having possession of a motor vehicle, whether temporarily or otherwise.

Alterations in motor vehicles.

10. When a motor vehicle is altered in respect of any of the particulars required in rule 4, sub-rule (*2*), such alteration shall forthwith be notified in writing to the District Magistrate by the owner and the vehicle shall be produced for inspection.

Mode of driving.

11. Every motor vehicle shall be driven from right-hand side of the vehicle:

Provided that the District Magistrate may, with respect to any vehicle or class of vehicle, for special reasons, permit such vehicle or class of vehicle to be driven from the other side.

Mode of carrying persons.

12. The driver or person in charge of a motor vehicle shall not carry any attendant or other person on the footboard or any other portion of the vehicle except within the body thereof.

Width.

13. (*1*) The width of a motor vehicle or trailer as measured between its extreme projecting points shall not exceed 7 feet 6 inches.

Springs.

(*2*) Every motor vehicle must be constructed with suitable springs between each axle and the frame. The springs must be properly hung and of sufficient strength and flexibility to meet all likely contingencies.

Brakes.

(3) (*a*) Brakes must be of sufficient strength and be capable of stopping and holding the vehicle under all conditions.

(*b*) There must be two entirely independent and efficient braking systems or one efficient braking system having two independent means of operation in each case so designed and constructed that notwithstanding the failure of any part of any braking system there shall still be available for application by the driver to not less than half the number of the wheels of the vehicle brakes sufficient under the most adverse conditions to bring the vehicle to rest within a reasonable distance.

In all cases the brakes operated by one of the means of operation shall be capable of being applied by direct mechanical action without the intervention of any hydraulic, electric or pneumatic device.

Where one braking system only is fitted—

(*i*) all the wheels of the vehicle shall be fitted with brakes all of which are operated by one of the means of operation; and

(*ii*) one at least of the means of operation shall cause brakes to be applied by direct mechanical means, and not through the transmission gear, to not less than half the number of wheels of the vehicle.

Where two independent braking systems are fitted the brakes of at least one of the braking systems shall act directly and not through the transmission gear on at least half the number of wheels of the vehicle.

For the purpose of this rule—

(*i*) not more than one front wheel shall be taken into account in reckoning half the number of the wheels of the vehicle;

(*ii*) braking systems shall not be deemed to be entirely independent if they are capable of being applied by the same means of operation;

(*iii*) any shaft, fixed or moving, to which any part of a braking system or any means of operation thereof is connected or by which it is supported shall be deemed to be part of that system.

(*c*) The brakes of one of the braking systems shall be applied by a pedal.

(*d*) The operation of either brake must not in any case declutch the engine from the transmission gear:

Provided that this clause shall not apply to motor vehicles already registered and in use nor to the motor vehicles in stock with dealers or importers on the date on which these rules come into force.

(*e*) The brake gear must be properly adjusted and nothing shall be placed on the vehicle which will prevent easy access to the brakes for adjustment.

(*f*) All brake connections secured with bolts or pins must have such bolts threaded and fitted with nuts, which latter must be locked or pinned.

Construction and maintenance.

(*4*) No motor vehicle or trailer shall be used unless it is so constructed and maintained as to admit of its being at all times under the full control and to prevent undue interference with passenger or other traffic and inconvenience or danger to the public or to any person riding on the vehicle.

Marking and lettering.

14. (*1*) The District Magistrate shall, in respect of every motor vehicle registered under these rules, assign to the vehicle a distinguishing mark which shall consist of, in the order named, (*i*) the serial number of the motor vehicle in the district in which it is registered, and (*ii*) following letters to denote the district in which it is registered, namely:—

Howrah	.. HW.	24-Parganas	.. TW.
Hooghly	.. HO.	Nadia	.. ND.
Burdwan	.. BD.	Murshidabad	.. MR.
Birbhum	.. BR.	Jessore	.. JS.
Bankura	.. BN.	Khulna	.. KH.
Midnapore	.. MD.	Rajshahi	.. RJ.
Chittagong	.. CG.	Pabna	.. PB.
Tippera	.. TP.	Bogra	.. BO.
Noakhali	.. NO.	Malda	.. MA.
Chittagong Hill Tracts	CS.	Rangpur	.. RN.
Dacca	.. DA.	Dinajpur	.. DI.
Faridpur	.. FR.	Jalpaiguri	.. JA.
Mymensingh	.. MY.	Darjeeling	.. DJ.
Bakarganj	.. BA.		

(*2*) The District Magistrate may issue a general number to any dealer in motor vehicles. Such general number may be used temporarily on any vehicle while in the possession of such dealer or his paid employee when such vehicle is—

(*a*) on test during construction or after completion, or

(*b*) on trial by an intending purchaser, or

(*c*) on its way to or from registration, or

(*d*) on its way to or from a railway station or wharf for or after trainage or shipment.

(*3*) A general number shall not be used by any person for any other purpose and may be cancelled at the discretion of the District Magistrate.

(*4*) When a general number has been assigned, the manufacturer or importer and dealer shall distinctively mark every vehicle covered by the number in the order named by (1) the letters GEN., (2) the general number, and (3) the district letters.

Numbers and letters how to be attached and maintained.

15. (*1*) No motor vehicle shall be used unless the number and letters assigned to it under rule 14 be shown on a flat plane surface perpendicular to the ground in the manner prescribed hereafter, so as to be legible at a reasonable distance. The plate must be attached to the satisfaction of the District Magistrate in an upright position to the front and back of the vehicle and to the back of a trailer drawn behind the vehicle.

(*2*) The number assigned under rule 14 (*1*) shall be painted in white on a black ground and the general number and letters assigned under sub-rules (*2*) and (*4*) of that rule, in signal red on a white ground. *Unpainted aluminium and brass numbers are forbidden.*

(*3*) The said numbers and letters must be in the case of a motor car at least 3½ inches high and five-eighths of an inch broad in every part. The space taken up by each figure contained in such number (except the figure 1) and by each such letter must be at least 2½ inches in width.

In the case of a motor cycle the above dimensions may be halved except that each number and letter must be three-eighths of an inch broad in every part.

(*4*) The space between adjoining letters and figures must be at least half an inch and there must be a margin of half an inch at the top and bottom and a side-margin of one inch of the ground on which the letters and figures are shown.

16. The numbers and letters referred to in rule 15 shall not be in any way obscured or rendered or allowed to become not easily distinguishable.

Lights.

17. (*1*) So long as a motor vehicle is in use or moving in a public place, between half an hour after sunset and half an hour before sunrise, the following lamps shall be affixed and kept lit and free from obstruction to the satisfaction of the District Magistrate:—

(*i*) two lamps each showing to the front a white light visible from a reasonable distance which shall be called "side lights".

(*ii*) one lamp showing a red light to the rear and a white light to the side or downwards fixed to the back of the vehicle in such a manner that the white light illuminates the rear identification plate and renders the letters and number easily legible from a reasonable distance. This lamp shall be called the "tail light".

Each such lamp shall, while the vehicle is in any such place during such hours as aforesaid, be kept properly trimmed, lighted and in efficient condition.

(*2*) (*a*) In addition to the side lights mentioned in clause (*i*) of sub-rule (*1*), a motor vehicle shall be provided with two powerful lamps one on each side, showing a white light and illuminating the road in front to a reasonable distance which shall be called "headlights".

(*b*) The headlights shall not be kept lit when the motor vehicle is stationary.

(*c*) The driver shall dip the headlights when he meets another approaching vehicle and shall not switch on the direct beam until the approaching motor vehicle is level with his own:

Provided that the driver of a motor vehicle which has no dipping arrangements, or of a motor vehicle the dipping arrangements of which have gone out of order, shall keep the headlights full on when approaching another motor vehicle.

Note.—No motor vehicle shall be registered from the date on which these rules come into force, unless it possesses arrangements to dip the headlights.

(*d*) No search light or spot light or other movable light other than dipping headlights shall be used in any town or when meeting vehicular traffic of any kind.

(*e*) No headlights shall be used in any public place which is brightly illuminated.

(*3*) So long as a motor vehicle is standing in a public place, except a recognised parking place or a stand or a street notified by the District Magistrate, between half an hour after sunset and half an hour before sunrise, the tail light or a "parking light" shall be kept lit, and the vehicle shall be parked on the left of the road and free from obstruction:

Provided that lights shall be switched off when a motor vehicle is filling its tank with petrol.

(*4*) Side lights shall not exceed 6 candle power.

(*5*) Side lights shall be so placed that no part of the motor vehicle or its load projects outwards more than twelve inches beyond a vertical line through the centre of such lights. They shall be of the same power and fixed at the same height from the ground:

Provided that this sub-rule shall not apply to motor vehicles already registered and in use when these rules come into force:

Provided, further, that this sub-rule shall not apply to motor vehicles in which the small front lights are embodied in the headlights.

(*6*) The tail light shall be placed on the right or off-side or in the centre of the motor vehicle.

(*7*) (*i*) A motor-cycle shall carry one headlight showing a white light in the direction in which the motor cycle is proceeding, so placed and so efficient as to illuminate and render easily distinguishable the registered number of the motor-cycle, and one red rear light showing a red light in the reverse direction or a reflector so constructed and attached to the motor-cycle as to reflect a red light from any light carried on another vehicle approaching from behind.

(*ii*) When a side-car is attached to such motor-cycle, the side-car shall also carry a white light showing to the front.

18. (*1*) No motor vehicle shall be fitted with more than five lamps showing simultaneously a light to the front and more than two lamps showing a light to the rear:

Provided that any lamp showing a light to the front may notwithstanding such limitation as aforesaid also show a red light to the rear.

(2) No motor vehicle shall carry any lamp other than a lamp showing a white light to the front or a lamp showing a red light to the rear without the sanction of the District Magistrate.

Illumination of numbers and letters.

19. During the time when lamps are required to be kept lit, the number and letters at the back of a motor vehicle or trailer and the number in front of a motor cycle shall be illuminated in an approved manner so as to be legible at a reasonable distance.

Motor vehicles to carry horns.

20. (1) Every motor vehicle shall carry a hand bulb horn capable of giving audible and sufficient warning of its approach and position.

(2) The driver of a motor vehicle shall not sound his horn for any purpose other than that of ensuring safety in traffic and shall not sound his horn continuously.

(3) No cut-outs, exhaust whistles, sirens, klaxons, electric horns or similar appliances of any description shall be used on any motor vehicles within the urban limits of any town or in the neighbourhood of any hospital.

Licensing of drivers.

21. No person shall drive a motor vehicle in a public place unless he holds a licence in force for the time being granted by a District Magistrate or other competent authority authorising him to drive such a motor vehicle:

Provided that licences to drive a motor omnibus or a motor lorry in the district of Darjeeling exclusive of Siliguri subdivision can only be obtained from the Deputy Commissioner of Darjeeling under the provisions of rule 207.

22. Every application for a driving licence shall—

(a) in the case of a person who does not drive for hire or remuneration be in Form E appended to these rules, and

(b) in the case of a person who drives for hire or remuneration be in Form F appended to these rules.

Medical certificate.

23. (1) Every applicant for a professional driving licence shall produce a medical certificate in Form F appended to these rules after being examined by the Assistant Surgeon at the headquarters of the Magistrate to whom the application is made, or by the Sub-Assistant Surgeon if no Assistant Surgeon is available at the headquarters or by a member of a board of medical practitioners in any area in which a board has been constituted by the Local Government for this purpose. A Magistrate who is authorised to issue a licence may require the holder of a professional licence in the area in which such Magistrate has jurisdiction to undergo a fresh medical examination by an Assistant or a Sub-Assistant Surgeon at the Magistrate's

headquarters if in his opinion there is reasonable doubt as to the holder's physical fitness to drive a motor vehicle. The fee chargeable for examination or re-examination shall be Rs. 4.

(*2*) A private licence shall not be issued to any person who earns his living by driving or who drives for remuneration of any kind.

Driving licence.

24. (*1*) (*a*) A licence may be granted by the District Magistrate to any person of or over 18 years of age who satisfies him that he is of good character, a competent driver and physically fit to drive by day or night. For the purpose of satisfying himself that the applicant is fit to drive, the District Magistrate may appoint such persons as he considers fit as examiners.

(*b*) A private motor driving licence shall be issued in Form G appended to these rules, and

(*c*) A professional motor driving licence shall be issued in Form H appended to these rules.

(*2*) Every licence shall contain the name and address of the licensee and shall specify the class of vehicle he is authorised to drive:

Provided that a professional licence shall also bear the photograph and identification marks of its holder.

Professional driving licence for notified districts.

25. (*1*) With a view to securing the efficiency of drivers and for the greater safety of the public, the Magistrate of a district notified in this behalf by the local Government may require that applicants for professional licences shall attend a motor training school approved and registered by him.

(*2*) If such applicant has been trained in a recognised motor or engineering workshop or has driven on a licence granted elsewhere for not less than two years, he may be exempted from attending a school, but shall be required to undergo a driving test.

Motor training school in a notified district.

26. (*1*) No motor training school shall be recognised by the District Magistrate for the purpose of the Act and the rules unless it is approved and registered by him.

(*2*) The situation of the premises of the training school must be notified to the District Magistrate and any alteration of address must also be notified.

(*3*) The premises of the training school will be open at all reasonable times to inspection by officers deputed by the District Magistrate.

(*4*) The District Magistrate may, in his discretion, withdraw his "approval" if it is proved that the firm or person concerned is unable to comply with the requirements set out herein or if the business is not carried on to his satisfaction.

(5) The District Magistrate shall fix the course and its duration, and the fees to be charged therefor.

(6) A person desirous of having a motor training school on the "approved" list must satisfy the District Magistrate—

(a) that he is of good character and of business repute and that he maintains a sufficient number of training cars fitted with duplicate controls for the instruction of students in driving;

(b) that his financial position is sound;

(c) that he maintains the apparatus specified by the District Magistrate;

(d) that he maintains an efficient staff for the instruction of students;

(e) that he is generally a fit and proper person to be in charge of a motor driving training school.

Duration of licence.

27. Every licence shall remain in force for a period of twelve months from the date on which it is granted or until it is suspended or cancelled, when it shall be surrendered to the District Magistrate.

Licence and other fees.

28. (1) The fee for a licence to drive a motor cycle shall be Rs. 4 whether the licence is private or professional.

(2) The fee for a private licence to drive a motor car shall be Rs. 10. Such private licence shall permit the licensee to drive for his own purpose and without remuneration any motor car other than a motor lorry or a motor omnibus.

(3) Professional driving licences for motor cars shall be divided into the following classes:—

(a) light motor cars, including motor cabs;

(b) heavy motor cars for the conveyance of goods including motor lorries and tractors;

(c) motor omnibuses.

No applicant shall be tested for class (b) until he has held a licence for class (a) for at least twelve months or for class (c) until he has held a licence for class (a) or class (b) for at least twelve months and is above the age of 21 years.

The District Magistrate may refuse to entertain an application for class (c) on any of the grounds laid down in rule 111 in Part IV of these rules.

The fee shall be Rs. 10 for application for each class, (a), (b) or (c).

(4) A fee of Rs. 2 shall be charged for every subsequent examination after a candidate for a licence has failed to pass the required test in the previous examination. A second or subsequent test shall only be allowed at intervals fixed at the discretion of the District Magistrate.

(5) The licence to drive an additional class of vehicle shall be endorsed on the existing licence and the combined licence to drive all vehicles in respect of which a licence has been granted shall remain in force for a period of twelve months from the date of such endorsement:

Provided that no fee shall be charged from members of the Police Force when driving licences are issued to them for the purpose of driving police motor vehicles.

(6) If a person to whom a licence has been granted reports to the District Magistrate that his or her licence has been lost or defaced, the District Magistrate may, after such investigation as he considers necessary and on payment of the full initial fee for such licence, issue to him or her a duplicate licence, including any particulars endorsed or entered upon the original licence and the duplicate so issued shall have the same effect as the original licence. But if any licence proved or represented to have been lost or mislaid is afterwards found, it must forthwith be delivered to the District Magistrate and any person in whose possession it may be shall forthwith deliver it up to the District Magistrate.

Renewal of licence.

29. Every licence shall be subject to annual renewal, to be effected on or before the date of expiry. If the renewal is effected on or before the date of expiry of the licence, a fee of Rs. 2 for a private licence and Rs. 4 for a professional licence shall be charged; if the renewal is effected after the date of expiry, the full fee shall be charged:

Provided that any licence which has not been renewed for three consecutive years shall not be re-issued.

Provided, further, that the District Magistrate renewing a licence granted in another district shall make a report to the authority who granted it:

Provided, further, that endorsements on a licence may be removed by the District Magistrate, if its holder has had a clean record during the preceding three years.

NOTE.—If the date of expiry falls on a Sunday or on a holiday or on a day when the office of the District Magistrate is closed, such date of expiry shall be deemed to be the next working day on which that office is open for the transaction of business.

30. The renewal of any driving licence, or any licence to act as a conductor of a motor omnibus, shall be refused, if in the opinion of the District Magistrate the licence cannot continue to be held without risk to the public, or if the conduct of the licensee is or has been during the currency of the licence such as to render it unadvisable, in the opinion of the District Magistrate, that the licensee should continue to hold the licence.

31. No fee shall be charged for renewal of licences issued under the proviso to rule 28 (5).

32. Professional drivers and conductors of omnibuses shall appear in person for the renewal of their licences before the District Magistrate, a Subdivisional Officer or a person appointed under rule 24 (*1*) (*a*).

Mode of payment of fees.

33. All fees payable for registration and renewal of registration of motor vehicles or for motor driving licences and their renewal may be paid by means of non-judicial stamps, or may be deposited in the local treasury or local branch of the Imperial Bank, the duplicate copy of the chalan being made over to the District Magistrate.

Licence records.

34. (*i*) All files relating to licences shall be maintained for three years since the date of their last renewal.

(*ii*) All files relating to the licences of motor drivers who have been declared to be permanently or temporarily disqualified for obtaining a licence under the Act shall be retained for thirty years.

The records referred to may, however, be destroyed, if the persons on whose account they have been preserved are known to be dead.

Change of address to be notified.

35. (*a*) Every holder of a professional driver's licence or a licence to act as conductor of an omnibus shall notify every change of his address in writing and shall personally produce his licence before the District Magistrate for necessary alteration within fourteen days of such change of address.

(*b*) Every holder of a private licence shall report the new address to the District Magistrate within fourteen days of such change of address.

Cancellation or suspension of licences.

36. Any driving licence may be cancelled or suspended for the unexpired portion of the period of validity by the District Magistrate if the holder of the licence—

(*a*) is convicted of any offence punishable under the Act, or any other Act, involving—

(*i*) danger to human life, or

(*ii*) hurt or injury to any person or animal, or

(*iii*) damage to any vehicle or property, or

(*iv*) abuse of or assault on a passenger or police-officer:

Provided that the offence was committed while the holder was driving a motor car or riding a motor cycle;

(*b*) is convicted of a breach of rule 46 or 47, *i.e.*, disobeying traffic orders or exceeding speed limit, or

(*c*) alters or defaces his licence by erasure or otherwise, or allows it to be so altered or defaced, or

(*d*) lends his licence to or allows it to be used by any other person, or

(*e*) contravenes the provisions of rule 37, or

(*f*) is found under the influence of alcohol or of any intoxicating drug while driving a motor car or riding a motor cycle, or

(*g*) fails to notify to the District Magistrate any change of address as required by rule 35, or

(*h*) has, during the currency of his licence, behaved in such a manner as to render it unadvisable in the opinion of the District Magistrate that the licensee should continue to hold the licence, or

(*i*) is, in the opinion of the District Magistrate, unable to exercise his calling without risk to the public, or

(*j*) is habitually convicted of offences under the Act, or the rules made thereunder.

Conditions of driving for purposes of instruction.

37. (*1*) No person shall drive a motor vehicle other than a motor cycle without a side car in any public place in order to receive instruction except when accompanied by a person duly licensed to drive the vehicle in question.

(*2*) Every person instructing another person to drive in a public place shall select the time and place having full regard to the convenience and safety of other road users.

(*3*) In any area prescribed by the District Magistrate in this behalf no person shall instruct an unlicensed person to drive a motor vehicle in any public place.

(*4*) No person who does not hold a licence to drive a light motor car shall drive a motor lorry or motor omnibus in any public place to receive instruction.

Driving in prohibited places.

38. No person shall drive a motor vehicle on any foot-way, or in any street or other public place where the use of motor vehicles is prohibited by the District Magistrate.

Rule of the road.

39. (*1*) The driver of a motor vehicle shall keep on the left side of the road provided as follows:—

(*a*) he shall keep to the right of any vehicle or animal proceeding in the same direction which he desires to pass; and

(*b*) he may pass any car or other vehicle running on fixed rails on whichever side thereof he may consider necessary or expedient, having due regard to the circumstances of the case and to the safety and convenience of other users of the road.

(*2*) When turning to the left, a motor vehicle shall be kept close to the corner. When turning to the right, it shall make a wide curve.

(*3*) A motor vehicle entering from a side road shall do so slowly and give way to traffic on a main road.

(*4*) When approaching cross roads or junctions, the driver shall slow down and sound his horn.

Signals when turning or stopping.

40. (*1*) When about to turn to the *right*, every driver of a motor vehicle shall extend his right arm and hand *with the palm turned to the front* and hold them *rigid* in a horizontal position straight out of and to the right of such motor vehicle (Signal No. 1, Appendix A).

(*2*) When about to *slow* down or turn to the *left*, every driver of a motor vehicle shall extend his right arm and hand *with the palm turned downwards* and move them up and down several times in such a manner that they can be seen by the driver of any vehicle which may be behind him (Signal No. 2, Appendix A).

(*3*) When about to *stop*, every driver of a motor vehicle shall hold the right forearm and hand vertical, palm turned to the front (Signal No. 3, Appendix A).

(*4*) The driver of a motor vehicle, desiring to allow a following motor vehicle to overtake him on his right, shall extend the right arm and hand below the level of the shoulder and move them backwards and forwards (Signal No. 4, Appendix A).

(*5*) Where motor vehicles are fitted with mechanical signalling devices, including the lighting of a lamp at the rear of a motor vehicle as a "stopping" signal, such mechanical signalling devices may be employed when convenient without danger to the public.

Signals to police officers directing traffic.

41. (*1*) When approaching a police officer on duty directing traffic at cross roads, every driver of a motor vehicle shall indicate the direction in which he intends to proceed, in the following manner, that is to say:—

(*i*) When intending to proceed straight ahead—by raising the hand towards the shoulder and moving the forearm well forward and then back in a vertical plane, making the movement sufficiently pronounced to be easily seen by the police officer (Signal No. 5, Appendix A).

(*ii*) When intending to turn to the right—by using the signal prescribed in rule 40 (*1*).

(*iii*) When intending to turn to the left—by pointing the hand to the left, making the movement sufficiently pronounced to be easily seen by the police officer (Signal No. 6, Appendix A).

(*2*) Where motor vehicles are fitted with mechanical signalling devices, such devices may be employed when convenient without danger to the public.

Causing obstruction.

42. No motor vehicle shall be allowed to stand in any street or other public place so as to cause obstruction. If a motor vehicle has to stop, it shall stop at the kerb or on the extreme edge of the road. A disabled motor vehicle shall at once be moved to the extreme edge of the road.

Motor vehicles not to be left unattended.

43. No motor vehicle shall be allowed to stand in any street or other public place unless it is attended by a person holding a subsisting licence granted under rule 24 except when the mechanism of such vehicle has been stopped.

Motor vehicles travelling backwards.

44. The driver of a motor car shall not cause the car to travel backwards for a greater distance or time than is consistent with the public safety.

Emission of smoke or vapour.

45. (*1*) No person shall cause or permit the emission of smoke or visible vapour from a motor vehicle in such quantity as to cause annoyance or danger to the public.

(*2*) No driver of a motor vehicle shall use any cut-out, fitting or other apparatus or device which will allow the exhaust gases from the engine of the motor car to escape into the atmosphere without first passing through a silencer, expansion chamber or other contrivance suitable and sufficient for reducing as far as may reasonably be practicable the noise which would otherwise be caused by the escape of the said gases.

Compliance with directions of police.

46. The person in charge of a motor vehicle shall obey all directions of police officers in uniform posted or stationed at crossings or other places for the regulation of traffic.

Speed limits.

47. (*1*) No motor vehicle shall be driven at a greater speed than—

(*a*) 25 miles an hour within any municipal area in the case of a motor cycle or a light motor car;

(*b*) 20 miles an hour in the case of a motor omnibus;

(*c*) 15 miles an hour in the case of a heavy motor car (not being a private motor car or a motor omnibus) if all the wheels of such vehicle are fitted with pneumatic tyres; and

(*d*) 12 miles an hour in the case of a heavy motor car if all the wheels of such vehicle are fitted with soft or elastic tyres other than pneumatic tyres:

Provided that if the axle-weight of the axle of a heavy motor car exceeds six tons in weight or if it draws a trailer the speed of such heavy motor car shall not exceed 8 miles an hour.

(*2*) The District Magistrate may, in consultation with the District Board or Municipality or other local authority concerned, restrict in any area within his jurisdiction by means of road signs the maximum speeds prescribed in sub-rule (*1*) at which motor vehicles of different classes may be driven therein, and no motor vehicle shall be driven within such area at a speed exceeding such restricted speed.

(*3*) The provisions of this rule shall not apply to such motor vehicles as may be specially exempted by the local Government in this behalf by a notification in the *Calcutta Gazette*.

Road Signs.

48. (*1*) Under section 12 of the Act, the District Magistrate may, in any public place, cause signboards or notice-boards to be exhibited or marks to be made on the surface of the road for the purpose of controlling motor vehicles, and may also cause islands or refuges of such character as he may consider appropriate, to be erected for the purpose of facilitating the crossing of the road by the public.

(*2*) The signs or notice-boards, which the District Magistrate may cause to be exhibited under the provisions of sub-rule (*1*) of this rule, shall include signs of the designs shown in Appendix B to these rules and no person shall drive any motor vehicle in contravention of any sign or notice-board which is one of the Prohibitory Signs shown in Part II of the said Appendix.

Stopping of vehicles.

49. (*1*) The person in charge of a motor vehicle shall cause the vehicle to stop and to remain stationary so long as may reasonably be necessary—

(*a*) when requested to do so by any police officer in uniform for the purpose of regulating traffic or of ascertaining the name and address of such person, or for any other reasonable purpose, or

(*b*) when requested to do so by any person having charge of a restive horse or other animal, or

(*c*) when the presence of the vehicle has caused an accident to any person or to any animal or vehicle in charge of any person.

(*2*) The request referred to in clauses (*a*) and (*b*) of sub-rule (*1*) may be made by such police officer or person putting up his hand as a signal to stop, or at night in such manner as the District Magistrate may direct.

(*3*) The person in charge of a motor vehicle, on the request of any police officer in uniform, or on the occurrence of an accident such as is referred to in clause (*c*) of sub-rule (*1*) on the reasonable request of any other person, shall produce his licence for inspection and

(*a*) truly state his name and address, and the name, place of abode and business of the owner of the vehicle, and

(*b*) give all possible immediate assistance to any person injured by any such accident and, if necessary, help in conveying him to a hospital,

(*c*) and if there is no person capable or in a position to require him to give his name and address, report the accident at the nearest police-station without unnecessary delay, and in any case, within twenty-four hours of the occurrence thereof.

Conditions of driving or using.

50. No person shall drive or have charge of, or cause or permit to be used, any motor vehicle or trailer—

(*a*) which does not in all respects conform to these rules, or

(*b*) which is so driven or used as to contravene any of these rules, or

(*c*) without the permission or consent of the owner.

Registers to be maintained by dealers or manufacturers.

51. (*1*) Every manufacturer, or dealer, shall maintain a register containing the following particulars with respect to every motor vehicle using a general number which leaves his premises, namely—

(*a*) the date and time when the vehicle goes out,

(*b*) the name and licence number of the person in charge thereof,

(*c*) the purpose for which the vehicle is sent out,

(*d*) the date and time of the return of the vehicle to the premises, and

(*e*) the distinguishing number and letters affixed to the vehicle in accordance with rule 14(4),

(*2*) The said register shall be in such form as the District Magistrate may from time to time prescribe and shall be open at all reasonable times to the inspection of the District Magistrate or any police officer not below the rank of Sub-Inspector.

Supply of information concerning drivers or conductors.

52. (*1*) Every owner, or in the case of a motor vehicle let out on hire, every person hiring such vehicle, shall give such information as may be required by a Magistrate or a police officer not below the rank of assistant sub-inspector as to the identity of the driver or conductor who is alleged to be guilty of an offence under the Act or the rules and if he fails to do so, shall be guilty of an offence, unless he shows to the satisfaction of the Court that he did not know and could not with reasonable diligence have ascertained the identity of the driver or conductor.

Responsibility of owners, hirers, drivers or conductors.

(*2*) Every owner, or in the case of a motor vehicle let out on hire every person hiring such vehicle, shall be held equally liable with the actual driver or conductor of a lorry or omnibus for the offence of overloading.

Explanation.—Any person in temporary possession of a motor vehicle under the provisions of rule 8 shall, for the purposes of this rule, be deemed to be the owner.

Supply of information regarding driving licences or registered motor vehicles.

53. A certified copy of the particulars entered in the registers of driving licences and registered motor vehicles shall be furnished to every person applying for the same on payment of a fee of eight annas in respect of each licence or registered motor vehicle.

Part III.

The provisions of this Part unless otherwise stated shall apply to all heavy motor cars inclusive of motor lorries, to all motor omnibuses unless otherwise provided for in Part IV of the rules and to all tractors.

Additional rules regarding registration.

54. (*1*) For the purpose of the registration of heavy motor cars—

(*a*) the register of such vehicles shall be maintained in Form I appended to these rules, and

(*b*) the application for the registration of such vehicles shall be made in Form J appended to these rules.

(*2*) Before a heavy motor car is registered, the weight of the car when unladen, and if the District Magistrate so directs, the axle-weight of each axle of the car, shall be ascertained to the satisfaction of the District Magistrate.

(*3*) The owner of the car shall, for the purpose of sub-rule (*2*) of this rule, cause the car to be driven or brought to any such place as the District Magistrate may appoint.

(*4*) Upon the registration of a heavy motor car—

(*a*) the weight of the car when unladen, as certified under sub-rule (*2*) of this rule,

(*b*) the axle-weight of each axle as so certified or (if not so certified) as declared by the owner of the car,

(*c*) the diameter of each wheel,

(*d*) the width and material of the tyre of each wheel, and

(*e*) the highest rate of speed at which, in conformity with rule 47, the car may be driven,

shall be entered in the register of motor vehicles.

Marking.

55. (*1*) Upon receiving from the District Magistrate a copy of the entries made in the register relating to a heavy motor car, the owner of

the car shall cause to be painted or otherwise plainly marked in a conspicuous place—

(*a*) on the right or off-side of the car—

(*i*) the registered weight of the car when unladen, and

(*ii*) the registered axle-weight of each axle, and

(*b*) on the left or near side of the car—

(*i*) the highest rate of speed at which, in conformity with rule 47, the car may be driven, and

(*ii*) the owner's name and address.

(*2*) The said marking shall be made in letters and figures not less than one inch in height and of such shape and colour as to be clearly legible and clearly distinguishable from the colour of the ground whereon the said marking is made.

(*3*) The owner of the car shall cause the said marking to be from time to time repaired or renewed, as often as may be necessary, to keep the letters and figures clearly legible and clearly distinguishable.

(*4*) This rule shall not apply to private motor cars.

Fresh registration or certification of vehicles.

56. (*1*) Notwithstanding anything contained in rule 4 (*1*) the owner of every heavy motor car registered in any other province under rules framed in that province under the Act, shall, before the vehicle is brought into use in Bengal, either—

(*a*) apply to the District Magistrate for the registration of the car under these rules, or

(*b*) cause the car to be taken to the District Magistrate, or to an officer appointed by him in this behalf, for the purpose of obtaining a certificate showing that the provisions of rules 54 and 55 have been sufficiently complied with in respect of the car.

(*2*) If the District Magistrate or the said officer is satisfied that the provisions of rules 54 and 55 have been sufficiently complied with in respect of a vehicle brought to him under either clause (*a*) or (*b*) of sub-rule (*1*), he may grant a certificate to that effect, and thereupon the car shall be deemed to have been registered under these rules, and the District Magistrate shall cause to be made in the register of motor cars such entries in respect of the car as are required by clause (*b*) of rule 54 (*1*).

Until it has been registered under these rules, or the certificate referred to in sub-rule (*2*) has been obtained, no heavy motor car shall be used, except for the purpose of being taken to be registered or examined for the purposes of sub-rule (*1*) or (*2*) of this rule.

Axle-weights.

57. (*1*) The axle-weight of a heavy motor car shall not exceed the registered axle-weight.

(2) The registered axle-weight of an axle of a heavy motor car shall not exceed eight tons, and the sum of the registered axle-weights of all the axles of a heavy motor car shall not exceed twelve tons:—

Provided that if a heavy motor car—

(*a*) draws a trailer which is so partially superimposed upon and attached to the heavy motor car that at all times the weight upon the rear axle of the heavy motor car shall exceed the weight upon the axle of the trailer or

(*b*) is provided with six road wheels mounted on three separate axles under a rigid frame and that the distance between the middle axle and the rear axle is not greater than 4 feet 6 inches and is not less than the exterior diameter of the tyre of the largest wheel,

the sum of the registered axle-weights shall not exceed sixteen tons, or

(*c*) is provided with six road wheels of which two are mounted on the front axle and four on the rear axle, the latter wheels on each side being mounted one in front of and one behind the axle, the registered axle-weight on the rear axle shall not exceed twelve tons and the sum of the registered axle-weights shall not exceed sixteen tons.

Tyres.

58. No heavy motor car shall be registered unless the car is fitted with pneumatic tyres on all wheels:

Provided that this rule shall not apply to tractors nor to any heavy motor cars which are in use or in stock with dealers or importers on the date on which these rules come into force:

Provided also that the Government may prohibit the driving of a heavy motor vehicle in any public place when in the opinion of the Government the driving of such vehicle would be likely to cause damage to the roadway or danger or inconvenience to the public.

Length.

59. The maximum overall length of a heavy motor car measured from the dumb irons, or, if there are no dumb irons, from the foremost part of the vehicle exclusive of the starting handle must not exceed twenty-seven feet six inches in the case of a four-wheeled vehicle and thirty feet in the case of a rigid frame six-wheeled vehicle:

Provided that if a heavy motor car draws a trailer which is so partially imposed upon and attached to the heavy motor car that at all times the weight upon the rear axle of the heavy motor car shall exceed the weight upon the axle of the trailer, the maximum overall length of the heavy motor car and the trailer so attached shall not exceed thirty-three feet.

Overhang of a heavy motor car.

60. The overhang of a heavy motor car shall not exceed—

(*a*) in the case of a heavy motor car not being a tractor, seven twenty-fourths of the overall length of the heavy motor car, and

(*b*) in the case of a heavy motor car being a tractor, six feet.

For the purposes of this rule, the expression "overhang" means the distance measured horizontally and parallel to the longitudinal axis of the heavy motor car between two vertical planes at right angles to such axis the one passing through that point of the heavy motor car (exclusive of any hood when down) which projects furthest to the rear and the other passing—

(*i*) in the case of a heavy motor car having two axles, one of which is not a steering axle, through the centre point of that axle, and

(*ii*) in the case of a heavy motor car having three axles—

(*a*) where the front axle is the only steering axle, through a point four inches in rear of the centre of a straight line joining the centre points of the rear and middle axles, and

(*b*) where the rear axle is the only steering axle, through the centre point of the middle axle, and

(*c*) where all the axles but one are steering axles, through the centre point of the rearmost axle which is not a steering axle, and

(*iii*) in the case of a heavy motor car (whether having two axles or having three axles) where all the axles are steering axles, through a point situated on the longitudinal axis of the vehicle and such that a line drawn from it at right angles to that axis will pass through the centre of the minimum turning circle of the vehicle.

Brakes of heavy motor cars.

61. (*a*) Brakes must be of sufficient strength and be capable of stopping and holding the vehicle under all conditions.

(*b*) There must be two entirely independent and efficient braking systems or one efficient braking system having two independent means of operation in each case so designed and constructed that notwithstanding the failure of any part of any braking system there shall still be available for application by the driver to not less than half the number of the wheels of the vehicle brakes sufficient under the most adverse conditions to bring the vehicle to rest within a reasonable distance.

In all cases the brakes operated by one of the means of operation shall be capable of being applied by direct mechanical action without the intervention of any hydraulic, electric or pneumatic device.

Where one braking system only is fitted—

(*i*) all the wheels of the vehicle shall be fitted with brakes all of which are operated by one of the means of operation; and

(*ii*) one at least of the means of operation shall cause brakes to be applied by direct mechanical means, and not through the transmission gear, to not less than half the number of wheels of the vehicle.

Where two independent braking systems are fitted the brakes of at least one of the braking systems shall act directly and not through the transmission gear on at least half the number of wheels of the vehicle.

For the purpose of this rule—

(*i*) not more than one front wheel shall be taken into account in reckoning half the number of the wheels of the vehicle;

(*ii*) braking systems shall not be deemed to be entirely independent if they are capable of being applied by the same means of operation;

(*iii*) any shaft, fixed or moving, to which any part of a braking system or any means of operation thereof is connected or by which it is supported shall be deemed to be part of that system.

(*c*) The brakes of one of the braking systems shall be applied by a pedal.

(*d*) The operation of either brake must not in any case declutch the engine from the transmission gear:

Provided that this clause shall not apply to motor vehicles already registered and in use nor to the motor vehicles in stock with dealers or importers on the date on which these rules come into force.

(*e*) The brake gear must be properly adjusted and nothing shall be placed on the vehicle which will prevent easy access to the brakes for adjustment.

(*f*) All brake connections secured with bolts or pins must have such bolts threaded and fitted with nuts, which latter must be locked or pinned.

Mechanical signalling device.

62. Every heavy motor vehicle including a motor lorry or a motor omnibus shall be fitted with a mechanical signalling device. Such device must fulfil the following conditions, that is to say—

(*a*) It shall signal a stop or change of direction in sufficient time to prevent danger to other traffic and in a clear and unmistakable manner by day and night.

(*b*) When it signals a change of direction, such signal shall be visible both from the front and the rear on the side to which the vehicle is about to turn, that is to say, on the inner side of the turn.

(*c*) It shall be such that the driver can at all times operate and control it from his seat.

Use of heavy motor cars upon bridges.

63. (*1*) When any authority which is liable for the repair of a bridge affixes or sets up in suitable and conspicuous positions on the bridge and on each approach to the bridge notices stating that the bridge is insufficient to carry a heavy motor car, the registered axle-weight of any axle of which exceeds such weight as may be specified in such notices, the owner of any such car shall not cause or suffer the car to be driven and the person driving or in charge of any such car shall not drive the car upon the bridge.

(*2*) No owner of a heavy motor car, the axle-weight of any axle of which exceeds six tons, shall cause or suffer the car to be driven, and no person driving or in charge of any such car shall drive the car upon any bridge at any time while another heavy motor car is on the bridge.

Trailers.

64. (*1*) No trailer shall be used unless it is fitted with pneumatic or resilient tyres of a soft and elastic material:

Provided that the District Magistrate may, for special reasons to be recorded in writing, permit non-resilient tyres if he is satisfied that their width and diameter is such that the vehicle will not damage road surfaces.

(*2*) The maximum length of a trailer excluding the coupling shall be 14 feet:

Provided that the District Magistrate may by order for special reasons to be recorded by him permit a trailer to be used whose length is in excess of 14 feet upon such conditions as may be specified in the order.

(*3*) The coupling shall not be more than 4 feet in length; it must be rigid and so constructed as to bear the strain put on it.

(*4*) Every trailer must be provided with suitable springs between each axle and the frame:

Provided that the District Magistrate may by order for special reasons to be recorded by him permit a trailer to be used without springs between the axle and the frame upon such conditions as may be specified in the order.

(*5*) No heavy motor car which is used either as a motor omnibus or otherwise for the conveyance of passengers for remuneration or hire shall draw a trailer.

(*6*) Not more than one trailer shall be drawn by any motor car:

Provided that the District Magistrate may by order for special reasons to be recorded by him permit more than one trailer to be drawn by any such car upon such conditions as may be specified in such order.

(*7*) A heavy motor car which exceeds twenty-six feet in overall length or which has more than four road wheels shall not draw a trailer.

Marking of trailers.

65. The owner of every trailer shall cause to be painted or otherwise plainly marked on a conspicuous part of the right or off-side of the trailer in letters and figures not less than one inch in height and of such

shape and colour as to be clearly legible and clearly distinguishable from the colour of the ground whereon the said marking is made—

(*a*) the weight of the trailer when unladen, and

(*b*) the axle-weight of each axle of the trailer and shall cause the said marking to be from time to time repaired or renewed, as often as may be necessary, to keep the said letters and figures clearly legible and clearly distinguishable.

Axle-weight of trailers.

66. The axle-weight of an axle of a trailer shall not exceed four tons:

Provided that if a heavy motor car draws a trailer which is so partially super-imposed upon and attached to the heavy motor car that at all times the weight upon the rear axle of the heavy motor car shall exceed the weight upon the axle of the trailer, the axle-weight of the axle of the trailer shall not exceed 6½ tons.

Determination of axle-weights.

67. (*1*) Whenever the District Magistrate, or any other officer duly authorised by him in this behalf, has reasonable grounds for suspecting that the axle-weight for the time being of any axle of any heavy motor car or trailer drawn thereby exceeds the registered or marked axle-weight of that axle, he may—

(*a*) require the person driving or in charge of the car to drive the car or cause it to be drawn with or without the trailer to a weighing machine, and

(*b*) cause the axle-weight for the time being of any such axle to be ascertained.

(*2*) The person driving or in charge of such car shall comply with any such requirements and shall to the best of his ability afford all such facilities as may reasonably be necessary for the purpose of ascertaining the axle-weight as aforesaid.

Height of load.

68. The load of a heavy motor car or trailer shall not exceed 10 feet from the roadway in height, or overlap the extreme width of the vehicle:

Provided that the District Magistrate may by order for special reasons to be recorded permit the height of a load to exceed 10 feet and/or to overlap the width of the vehicle upon such conditions as may be specified in the order.

Part IV.—Special rules governing Public Service Vehicles.

Limit of Public Service Vehicles.

69. The District Magistrate shall not sanction an application for the registration of a public service vehicle if he is satisfied—

(*a*) that there are already an adequate number of public service vehicles in the district; or

(*b*) that the plying of a public service vehicle on the route or any addition to the number of public service vehicles on the route on which the applicant intends that the public service vehicle shall ply would involve danger, injury or annoyance to the public.

70. There shall be one appeal to the Divisional Commissioner against an order of the District Magistrate refusing to sanction an application for registration of a public service vehicle. The orders of the Divisional Commissioner shall be final:

Provided that no such appeal shall be entertained unless it is presented within one month from the date of the order appealed against.

Routes.

71. The District Magistrate may, with the view to securing the public safety and the convenience of traffic, define, by reference to terminal points and to the course to be followed between those points, the routes upon which regular services of omnibuses may be established. Any person who proposes to establish a regular service of omnibuses upon a route which is not an approved route may apply to the District Magistrate to define that route as an approved route.

72. When licensing an omnibus to ply for hire, the District Magistrate may attach to any such licence, the following conditions:—

(*a*) a condition that the omnibus shall maintain a regular public service on the approved route or routes.

(*b*) a condition that the omnibus shall not ply for hire other than on the approval rpute or routes for which it is licensed,

(*c*) a condition that the omnibus shall not be withdrawn from public hire except with the permission of the District Magistrate.

73. (*1*) The District Magistrate may call on all persons to whom a public service vehicle licence for an omnibus has been granted to deposit, within 14 days of such order, with the District Magistrate, a schedule in such form and identified in such manner as he may require showing—

(*a*) the approved routes upon which a regular service of omnibus is maintained,

(*b*) the time at which the service on each route is to commence and end on each day,

(*c*) the service to be maintained on each such route, distinguishing, if the service to be maintained on different days or at different hours is to vary, the service to be maintained on the several days or at the several hours,

(*d*) the maximum number of omnibuses to be used to maintain such service on each such route distinguishing, if the service is to vary on different days, the maximum number to be so used on the several days,

(*e*) the stages into which he intends to divide each route and the fares which he intends to charge in respect of such stages, distinguishing, if the stages and fares are to vary on different days or at different hours, the stages and fares on the several days and at the several hours and shall supply to the District Magistrate such number of copies of the deposited schedule as the District Magistrate may require.

(*2*) With a view to public convenience the District Magistrate may direct that such schedule shall be amended in such respect as he thinks fit.

(3) On the order of the District Magistrate such schedule or amended schedule shall come into force.

74. The holder of such a licence may, at any time but only at intervals of not less than four weeks, amend any such schedule or substitute a new schedule therefor by depositing with the District Magistrate the proposed amended or new schedule in such form and identified in such manner as the District Magistrate may require, and after the deposit of the amended or new schedule with the concurrence of the District Magistrate, the amended schedule or new schedule, as the case may be, shall come into force.

75. A person to whom a licence for an omnibus has been granted subject to the condition that it shall not ply for hire except in maintaining a regular service, shall, except when prevented by accident or other unavoidable cause, or when otherwise authorised by the District Magistrate establish and maintain a service in accordance with the schedule for the time being in force with respect to his omnibus and shall not use for the maintenance of any service omnibuses other than those specified in such schedule, and shall not charge different fare or fares with respect to different stages from those specified in the schedule.

76. Where, as respects any route or part of a route, the Governor in Council is of opinion that by reason—

(*a*) of the width of the road or part of the road or the density of traffic thereon, or

(*b*) of the existence of alternative facilities for the conveyance of passengers along that route or part of the route or in proximity thereto, or of the omnibus accommodation on the route or part of the route being excessive,

it is desirable that an order under this rule shall be made, he may by order declare the route or part of the route to be a route in which the plying for hire by omnibuses and motor cabs shall be prohibited or restricted either generally or during particular hours, and a route or part of a route with respect to which such an order is made is hereinafter referred to as a "restricted route".

77. Where the Governor in Council has so declared any route or part of a route to be a "restricted route" the District Magistrate may prohibit or restrict the plying for hire by omnibuses and motor cabs on that route either generally or during particular hours and limit the aggregate number of journeys which may be made in either direction along the route during particular hours by omnibuses plying for hire.

78. All routes which are approved routes shall be numbered and classified in such a manner as may be directed by the District Magistrate and a list of all such approved routes shall be maintained at the office of the District Magistrate. In any case where it is necessary to refer to any routes in connection with any licence granted in respect of a motor omnibus, it shall for the purpose of identification be sufficient to refer to the classification or numbers of the routes.

79. An omnibus shall not ply for hire except on approved routes, provided that the District Magistrate may grant permission which may be either of special or of general application and may be either absolute or subject to any conditions, for an omnibus to ply for hire on other than an approved route.

80. The District Magistrate may allot places along approved routes for omnibuses to stop for picking up or setting down passengers. These places shall be called "Bus Stops" and no omnibus shall stop to pick up or set down passengers at any places other than such "Bus Stops."

Public Service Vehicle Licence.

81. No person shall cause or permit a motor vehicle to be used as a public service vehicle unless he has obtained for it from the District Magistrate a public service vehicle licence of the appropriate class.

The public service vehicle licence shall be in Form L appended to these rules. It shall consist of two parts. One part shall be kept in the custody of the District Magistrate. The other part, hereinafter called the licence card, shall be attached to and carried on the vehicle in a holder at all times when the motor vehicle is standing or plying for hire in a public place or street. The holder must be of metal and of weather-proof construction. It must be circular and conform to the following specifications:—

Card Tray—The licence card should fit neatly into a sheet metal tray of suitable thickness having a turned-up edge of sufficient depth to hold the card and a stout cover of transparent white glass.

Ring Cover—A circular ring of sheet metal shaped to fit down closely on the tray and adapted for fixing by screws, bolts or otherwise to the vehicle in the prescribed position. A rubber packing ring should be arranged to fit between the ring cover and cover glass and tray so as to render the whole carrier weather-proof.

Dimensions—The aperture within the ring cover should clearly exhibit the whole of the licence card and should have a diameter of 2·5/8 inches.

82. The licence shall be fitted on the vehicle in such a position that it shall be clearly visible in day light to a person standing beside the vehicle.

83. (*a*) An applicant (which expression shall mean an individual, firm or corporate body as the case may be) desirous of obtaining a public service vehicle licence for either a motor cab or a motor omnibus shall apply in Form K appended to these rules to such place as the District Magistrate may appoint.

(*b*) An application for a licence on behalf of a co-partnership or company shall be made by, and the licence if granted shall be issued to, the senior partner or the Secretary or Manager or other responsible official of the company as the case may be.

84. (*1*) A public service vehicle licence shall not be granted to any person under the age of 21 years and if granted to any such person it shall be void.

(*2*) The District Magistrate may, in his discretion, refuse to grant a public service vehicle licence if the applicant has previously obtained a licence for a public service vehicle and such licence has been revoked or suspended.

(3) The District Magistrate shall not grant a public service vehicle licence, if the applicant fails to satisfy him—

(a) that the public service vehicle conforms to the conditions of fitness from time to time laid down;

(b) that suitable and sufficient garage accommodation is provided with proper facilities for the maintenance and cleanliness of the vehicle;

(c) that he is of good character, that his financial position is such that he is a fit and proper person to hold a licence and that he is otherwise in a position to carry out his responsibilities as licensee of a public service vehicle, and

(d) where the application is made on behalf of a firm or a company that the applicant is of good character and that the firm or company is of good business repute and its financial position is such that a licence may properly be granted.

(4) If the application is approved by the District Magistrate, the applicant shall bring the vehicle, to which he desires the licence shall attach, to such place as the District Magistrate shall direct for examination together with a current registration certificate for the vehicle in the name of the applicant granted under Part II of these rules.

(5) If, however, after the District Magistrate has approved of the application, anything comes to his knowledge or circumstances arise which satisfy him that it is undesirable that such licence should be granted, he may withdraw or suspend such approval and if such approval is finally withdrawn, a licence shall not be issued. The District Magistrate shall record in writing the reasons for the withdrawal or suspension of such approval.

(6) A public service vehicle licence shall, unless suspended or revoked or rendered null and void in the meantime, continue in force up to the date on which the registration of the vehicle expires but not for a longer period than one year.

(7) The person to whom a licence has been issued whether individually or on behalf of a co-partnership or company, shall be responsible for the observance of the conditions under which the licence is granted as if he were the person solely interested in the licence.

(8) The licensee—

(i) shall not knowingly permit his public service vehicle to be used for an illegal or immoral purpose, or

(ii) shall not deface or mutilate his licence, or

(iii) shall at all times when required produce his licence to the District Magistrate or to such person as the District Magistrate may appoint, or

(iv) shall at all reasonable times for the purpose of inspection, examination or testing of the vehicle to which the licence relates—

(a) produce the vehicle at a time and place to be notified.

(b) afford to any officer, appointed by the District Magistrate, full facilities for such inspection, examination or testing, including access to his premises for the purpose;

(*v*) shall within three days after notice shall have been delivered to him personally or left at the address mentioned in or last endorsed upon his licence, deliver up his licence card to the District Magistrate or any officer appointed by him unless the licence card has previously been removed from the vehicle under the provisions of rule 85.

(*vi*) shall cause the public service vehicle and all its fittings and furniture to be maintained and kept in good order and repair and shall take all practicable means to secure that all parts of the mechanism, including the brakes and steering gear are free from defects and in efficient working order, that the inside and outside of the body and all other parts of the vehicle are kept clean and the whole ready and efficient for the purpose of hire, and shall not suffer any printed, written or other matter to appear on the outside or inside of the vehicle except such as shall be approved by the District Magistrate;

(*vii*) shall on the happening to the vehicle of any failure or accident of a nature calculated to affect the safety of the passengers or of persons using the road, or on any alteration, otherwise than by way of replacement of parts, being made in the structure or equipment of the vehicle, forthwith give notice to the District Magistrate;

(*viii*) shall not employ or permit or suffer any person to be employed as a driver of a public service vehicle of a class not mentioned in or endorsed upon the said driver's licence;

(*ix*) shall not permit or suffer the public service vehicle to be sublet;

(*x*) shall maintain a register containing the following particulars with respect to each public service vehicle standing or plying for hire:—

(*a*) the date and time when the vehicle leaves the owner's premises,

(*b*) the name and licence numbers of the drivers and in the case of an omnibus, of the conductors,

(*c*) the date and time of the return of the vehicle.

Such register shall be available for inspection by the District Magistrate or any other officer appointed by him at all reasonable times.

(*9*) The licensee shall, if during the currency of his licence he changes his address, within fourteen days of such change, produce or cause to be produced his licence to the office of the District Magistrate in order to have the new address endorsed thereon. The address mentioned in or last endorsed upon the licence shall for all purposes connected with the licence be deemed to be the address of the licensee of the vehicle to which the licence refers.

(*10*) Any licence defaced or on which there is an erasure shall be void.

85. (*1*) A public service vehicle licence shall be liable to revocation by the District Magistrate or suspension for such period as he thinks fit in any of the following events:—

(*a*) if the licence has been obtained by any misrepresentation, or

(*b*) if the licensed person fails to comply with any of the conditions upon which the licence issued to him has been granted, or

(*c*) if the licensee has been convicted of an offence under the Act, or the rules made thereunder, or

(*d*) if, in the opinion of the District Magistrate, the licence cannot continue to be held without risk to the public, or if the conduct of the licensee is or has been during the currency of the licence such as to render it unadvisable, in the opinion of the District Magistrate, that the licensee should continue to hold the licence.

(*2*) Against an order of revocation there shall be one appeal to the Commissioner of the Division whose orders shall be final:

Provided that no such appeal shall be entertained unless it is presented within one month from the date of the order appealed against.

(*3*) In the case of the death of a licensee during the currency of his licence, the licence shall be brought to the office of the District Magistrate and the District Magistrate may (if he thinks fit) by endorsement thereon transfer the licence to the personal representative of the deceased person if such representative satisfies the District Magistrate as hereinbefore required of his fitness to hold the licence. In the case of a partnership or company, the licence may in like manner or like conditions be transferred from the licensee to his successor.

(*4*) The District Magistrate, or such officer as he may empower in this behalf, may suspend the public service vehicle licence of any such vehicle when on inspection it appears to him that the vehicle owing to defects therein is or is likely to become unfit for service or that it is not maintained in such a condition as to prevent danger to the public, and may remove the licence card from the vehicle until the defects have been remedied to the satisfaction of the District Magistrate. A notice of such suspension shall be sent to the holder of the licence.

86. A duplicate licence card shall be issued on payment of Rs. 5 on production of satisfactory proof of loss of the original.

87. The carrying capacity of each public service vehicle shall be fixed by the District Magistrate in the manner hereinafter provided and shall be entered in the public service vehicle licence—

(*a*) where separate seats are provided for each passenger one person shall be counted for each separate seat excluding the driver's seat, and, where no platform is provided for the conductor to stand on, excluding the conductor's seat,

(*b*) where the vehicle is fitted with continuous seats one person shall be counted for each complete length of 15 inches in a straight line along the length of the front of each seat but shall not include the driver's seat, or the seat of the conductor where no platform is provided for the conductor to stand on.

NOTE.—If a cleaner or any other assistant is carried, he should be treated as a passenger for the purpose of seating in the vehicle.

88. Whenever a vehicle for which a public service vehicle licence has been granted is sold by the licensee or otherwise ceases to be his property, the licence shall lapse and become null and void.

89. The person to whom a licence for a motor cab has been granted under these rules shall not, except when prevented by accident or other unavoidable cause, wilfully withdraw his motor cab from hire unless he has previously obtained the permission of the District Magistrate.

89A. No motor vehicle licensed as a public service vehicle under these rules shall be used in Calcutta including its suburbs and the Municipality of Howrah, except in conformity with the rules in force in those areas.

Conduct of Drivers, Conductors and Passengers.

90. When a public service vehicle is standing, plying or carrying passengers for hire—

(*a*) A person shall not—

(*i*) enter or alight from the vehicle otherwise than by the door or opening provided for that purpose, or

(*ii*) when entering or attempting to enter the vehicle wilfully impede passengers seeking to alight there from, or

(*iii*) spit upon or wilfully soil or defile the inside or outside of the vehicle, or

(*iv*) unreasonably interfere with the comfort of any passenger.

(*b*) (*1*) No person other than the registered owner or such person duly authorised by the registered owner shall—

(*i*) wilfully remove or displace any route indicator or destination board, or any printed or other notice or advertisement in or on the vehicle, or

(*ii*) wilfully obstruct or interfere with any conductor, driver or other servant of the owner acting in the performance of his duty upon or in connection with the vehicle, or

(*iii*) enter a public service vehicle when the said vehicle is already occupied by the full complement of passengers which it is licensed to carry and any person who has so entered shall alight from the vehicle when requested to do so by the conductor, or

(*iv*) interfere with or damage any part of the vehicle or its equipment.

(*2*) No person shall—

(*i*) enter or mount the vehicle, or hold or hang on by or to any part of the vehicle except with the intention of becoming a passenger thereon, or

(*ii*) enter, mount, or leave or attempt to enter, mount or leave the vehicle while it is in motion.

(*c*) No person shall travel upon the upper deck of the vehicle unless he occupies a seat provided for that purpose, or upon any part of the vehicle which is not provided for the conveyance of passengers.

(*d*) The conductor of a public service vehicle shall not permit any breach of this rule.

91. When an omnibus is standing, plying or carrying passengers for hire—

(*a*) Every person shall—

(*i*) before leaving the vehicle, or immediately upon demand, declare the journey he has taken or intends to take and pay the conductor the fare for such journey and obtain the ticket supplied therefor;

(*ii*) if requested by the conductor, leave the vehicle on completion of the journey for which he has paid, unless he tenders the fare for a further journey:

(*iii*) show his ticket, if any, when required to do so, to the conductor or any other authorised officer of the owner.

(*b*) A person shall not—

(*i*) wilfully alter or deface his ticket, or

(*ii*) bring any luggage in excess of 15 seers in or upon the vehicle except with the consent of the conductor, or place any such luggage or article elsewhere in or on the vehicle than as the conductor may direct, or,

(*iii*) speak to the driver of the vehicle, or

(*iv*) smoke or carry a lighted pipe, cigar or cigarette in any part of the vehicle in which a notice is exhibited that smoking is prohibited, or

(*v*) when in or on the vehicle sell or offer for sale or distribute goods or printed matter of any description or collect money for any purpose.

92. The owner or the conductor of a motor omnibus standing or plying for hire shall not suffer or permit any article, material or substance which may be dangerous to any passenger or which may be inflammable to be carried on the vehicle.

93. The conductor or the driver of any public service vehicle shall not, while there are any passengers in the vehicle or while the engine is running, permit any petrol to be filled into the tank thereof.

94. The conductor of a motor omnibus shall not—

(*i*) permit any obstruction of any kind in any gangway or passage of the vehicle;

(*ii*) permit any luggage, parcel or other article to be carried on the outside of the vehicle except on the luggage grid provided for the purpose;

(*iii*) permit any luggage or article to be placed on the luggage grid on the roof or elsewhere on the vehicle in such a manner as to project beyond the ordinary limits of the vehicle;

(*iv*) permit the load on the luggage grid to exceed a height of two feet above the roof of the omnibus;

(*v*) permit any dangerous or cumbersome luggage or other article to be carried in the omnibus to the inconvenience of other passengers;

(*vi*) permit any luggage in excess of 15 seers for each passenger for which the vehicle is licensed.

95. The conductor and the driver of a public service vehicle shall not knowingly permit any person suffering from a contagious or infectious disease to travel in the vehicle.

96. The proprietor of every motor omnibus shall cause to be placed inside such omnibus a lamp or lamps in such a position and manner as shall be directed by the District Magistrate and the conductor shall keep the said lamp or lamps properly lighted whenever such omnibus shall be used to ply for hire or carry passengers at any time after sunset or before sunrise.

97. The driver or the conductor of an omnibus—

(*a*) shall, as regards the manner of taking up or setting down passengers desirous of entering or leaving such omnibus, comply with the directions of every police officer authorised to keep order, regulate the traffic or prevent obstruction of the streets;

(*b*) shall, consistent with any traffic rules which may exist prohibiting the stopping of omnibuses in restricted areas otherwise than at appointed stopping places, bring the omnibus or cause it to be brought to a standstill at the extreme left edge of the road, whenever to his knowledge any passenger shall be desirous of leaving such omnibus, and also whenever any passenger shall be desirous of entering it, provided such omnibus is not already occupied by the full number of persons authorised to be carried therein, but he shall not bring it or cause it to be brought to a standstill at a cross-road, top of a bridge or any other place where it is likely to be a source of danger or inconvenience to other persons using the road;

(*c*) shall not, when any person shall be entering or leaving such omnibus, wilfully start it or cause it to be started before such person shall be safely in or upon such omnibus or shall have alighted from and be clear of the same as the case may be.

98. (*1*) Immediately after the termination of any journey, the conductor of a motor omnibus or the driver of a motor cab shall carefully search the vehicle for any property which may have been accidentally left therein and shall within 24 hours deposit such property if not sooner claimed by the owner, in the state in which he finds it, at the nearest police-station and truly state particulars of such finding.

(*2*) Any passenger who finds property accidentally left in a public service vehicle shall immediately hand the same to the conductor, who

shall, within the period before stated, if it is not sooner claimed by the owner, deposit the property in the state in which it was found at the nearest police-station and truly state the particulars of such finding.

99. The driver or the conductor of a public service vehicle shall at all times during his employment or when appearing before a Court, have in his possession the licence issued to him under these rules and shall produce the same on demand by any police officer.

100. No driver of a motor cab and no driver or conductor of a motor omnibus shall—

(*a*) be drunk during his employment;

(*b*) make use of insulting or abusive language or gesture;

(*c*) shout or sound horn in order to attract the attention of the public or of a possible passenger or for any other reason act in such a way as to cause inconvenience or annoyance to the public.

101. No driver of a motor cab or a motor omnibus shall—

(*a*) permit the vehicle to stand (elsewhere than at some stand or other place appointed for the purpose) or loiter in or upon any public street or road or place;

(*b*) refuse to give way (when he reasonably and conveniently may do so) to any other vehicle.

102. No driver or conductor shall—

(*a*) demand more than the legal fare;

(*b*) permit the vehicle to ply for hire with a greater number of passengers than the vehicle is licensed to carry;

(*c*) wilfully obstruct or hinder the driver of any other public service vehicle in taking up or setting down any person into or from such public service vehicle;

(*d*) wrongfully prevent or attempt to prevent the driver of any other public service vehicle from being hired;

(*e*) before he has been discharged by the hirer, desert from his hiring;

(*f*) ply for hire with any public service vehicle which is at the time unfit for public use;

(*g*) without reasonable cause refuse to accept an intending passenger;

(*h*) in the absence of reasonable cause to the contrary fail or neglect to proceed to the destination named by the hirer by the shortest and quickest route;

(*i*) permit the public service vehicle to be used for an illegal or immoral purpose.

103. No driver or conductor of a motor omnibus shall wilfully deceive any person in respect of the route or the destination thereof.

104. The driver of a motor omnibus having started from one terminal point shall complete the journey along the approved route to the other terminal point, except when prevented by accident, mechanical derangement or tyre failure, in which case he will park his vehicle on the extreme left of the roadway in such a manner as not to cause

obstruction or danger to other users of the road. If a disabled vehicle is so parked during the period from half an hour after sunset to half an hour before sunrise, its position shall be clearly indicated by a red lamp affixed to the front and rear of the vehicle.

105. No hirer of a motor cab shall refuse or omit to pay the legal fare for the hire of such cab.

106. No omnibus shall stand or ply for hire or carry passengers for hire unless a conductor is employed thereon.

107. The owner of a motor cab or motor omnibus shall cause the vehicle always to be provided with a proper and satisfactory motor car repair outfit with a tyre fully inflated on a spare rim or spare wheel.

Drivers' and Conductors' Licences.

108. No person shall act as a driver of a motor cab or motor omnibus, or as a conductor unless he holds a current licence for that particular class of vehicle.

109. No person under the age of 21 years shall be granted a licence to drive a public service vehicle and no person under the age of 18 years shall be granted a licence to act as a conductor of a motor omnibus:

Provided that no such licence shall be granted or renewed unless the person possesses a fair knowledge of the provisions of the rules under the Act.

110. An application for a licence—

(*a*) to drive a motor cab or a motor omnibus shall be made in Form M appended to these rules;

(*b*) to act as conductor of a motor omnibus shall be made in Form F appended to these rules.

111. The District Magistrate may, in his discretion, refuse to grant or renew and may suspend for such period as he thinks fit any licence issued to drive a motor omnibus or a motor cab or to act as a conductor—

(*a*) if the applicant fails to satisfy him that he is of good character and fit to act as such driver or conductor as the case may be;

(*b*) if the applicant having held a licence has habitually contravened the provisions of the Act, or the rules made thereunder, or if in the opinion of the District Magistrate the applicant has been guilty of misconduct in the exercise of his calling or is unable to exercise his calling without risk to the public.

112. A fee of Rs. 5 shall be charged for a licence to act as a conductor of a motor omnibus. Every such licence shall be in Form N appended to these rules and shall remain in force for a period of 12 months with effect from the date on which it is granted or until it is suspended or cancelled when it shall be surrendered to the District Magistrate.

Every such licence shall be subject to annual renewal to be effected on or before the date of expiry. If the renewal is effected on or

before the date of expiry, a fee of Rs. 2 shall be charged. If the renewal is effected after the date of expiry, the full fee shall be charged.

NOTE.—If the date of expiry falls on a Sunday or on a holiday or on a day when the office of the District Magistrate is closed, such date of expiry shall be deemed to be the next working day on which that office is open for the transaction of business.

113. (*a*) The provisions of rule 23 (*1*) about medical examination shall also apply to persons applying for licences to act as conductors of motor omnibuses.

(*b*) A licence to act as conductor may be granted by the District Magistrate to any person who satisfies him that he is of good character and physically fit for the work.

(*c*) A licence to act as conductor shall contain the name and address of its holder and bear his photograph and identification marks.

(*d*) If a person to whom a licence to act as conductor has been granted reports to the District Magistrate that his licence has been lost, mislaid or defaced, the District Magistrate may, after such investigation as he considers necessary and on payment of the full initial fee for such licence, issue to him a duplicate licence including any particulars endorsed or entered upon his original licence, and the duplicate licence so issued shall have the same effect as the original licence. If, however, any licence proved or represented to have been lost or mislaid is afterwards found it must forthwith be delivered to the District Magistrate or any person in whose possession it may be, shall forthwith deliver it up to the District Magistrate.

(*e*) Any licence to act as conductor may be cancelled or suspended by the District Magistrate for any period not exceeding the period of validity, if its holder—

(*1*) is convicted of any offence punishable under the Act, or any other Act, involving damage or loss of any passenger's property or abuse of or assault on a passenger or police officer:

Provided that the offence was committed while the holder was acting as conductor of a motor bus; or

(*2*) alters or defaces his licence by erasure or otherwise or allows it to be so altered or defaced; or

(*3*) lends his licence to or allows it to be used by any other person; or

(*4*) is found under the influence of alcohol or of any intoxicating drug while acting as conductor of a motor bus; or

(*5*) fails to notify to the District Magistrate any change of address as required by rule 35 (*a*); or

(*6*) is, in the opinion of the District Magistrate, unable to exercise his calling without risk to the passengers; or

(*7*) is habitually convicted of offences under the Act or the rules made thereunder.

Rates of fare for motor cabs.

114. The District Magistrate may, after consulting the interests concerned, fix the rates of fare for the hire of motor cabs. He may also fix charges for detention of a motor cab. A list of such rates and fares shall be exhibited in a conspicuous part of the motor cab. Persons hiring a motor cab shall be required to pay any toll or ferry charge in connection with a journey unless such toll is included specifically in the rates fixed by the District Magistrate.

115. The District Magistrate may make local rules for the conduct of motor cabs on appointed motor stands.

Conditions of fitness of motor cabs.

116. Every motor vehicle intended for registration or renewal of registration as a motor cab shall be produced before the District Magistrate or such other officer appointed by him for inspection.

Such inspecting officer shall satisfy himself that the following requirements are complied with.

117. *Springs*—Must be properly hung, of sufficient strength and flexibility to meet all purposes which may be required of them. The rear springs must be attached to, or bear upon, the back axle or axle casing as near to the road wheels as possible, and the distance between the outsides must not be less than 40 inches. Where a cross spring is used, it must be so applied that it shall not cause or increase side-sway. The front springs must be as wide apart as possible and not less than 26 inches from outside to outside:

Provided that the District Magistrate may allow necessary modifications of the above to meet local conditions in his district.

118. *Tyres.*—The material of which each tyre is made must be soft and elastic, *e.g.*, pneumatic rubber tyres.

119. *Brakes.*—(*a*) Brakes must be of sufficient strength and be capable of stopping and holding the vehicle under all conditions.

(*b*) There must be two entirely independent and efficient braking systems or one efficient braking system having two independent means of operation in each case so designed and constructed that notwithstanding the failure of any part of any braking system there shall still be available for application by the driver to not less than half the number of the wheels of the vehicle brakes sufficient under the most adverse conditions to bring the vehicle to rest within a reasonable distance.

In all cases the brakes operated by one of the means of operation shall be capable of being applied by direct mechanical action without the intervention of any hydraulic, electric or pneumatic device.

Where one braking system only is fitted—

(*i*) all the wheels of the vehicle shall be fitted with brakes all of which are operated by one of the means of operation; and

(*ii*) one at least of the means of operation shall cause brakes to be applied by direct mechanical means, and not through the transmission gear, to not less than half the number of wheels of the vehicle.

Where two independent braking systems are fitted the brakes of at least one of the braking systems shall act directly and not through the transmission gear on at least half the number of wheels of the vehicle.

For the purpose of this rule—

(*i*) not more than one front wheel shall be taken into account in reckoning half the number of the wheels of the vehicle;

(*ii*) braking systems shall not be deemed to be entirely independent if they are capable of being applied by the same means of operation;

(*iii*) any shaft, fixed or moving, to which any part of a braking system or any means of operation thereof is connected or by which it is supported shall be deemed to be part of that system.

(*c*) The brakes of one of the braking systems shall be applied by a pedal.

(*d*) The operation of either brake must not in any case declutch the engine from the transmission gear:

Provided that this clause shall not apply to motor vehicles already registered and in use nor to the motor vehicles in stock with dealers or importers on the date on which these rules come into force.

(*e*) The brake gear must be properly adjusted and nothing shall be placed on the vehicle which will prevent easy access to the brakes for adjustment.

(*f*) All brake connections secured with bolts or pins must have such bolts threaded and fitted with nuts, which latter must be locked or pinned.

120. *Horn.*—An approved pattern hand bulb horn having a single deep toned note for giving audible warning of approach of the vehicle must be provided.

121. *Steering arms and connections.*—(*a*) The steering mechanism must be so constructed or arranged as to avoid the possibility of overlock.

(*b*) The ball and socket joints of steering connections, when such are used, should not be pendant, but the longitudinal or transverse rods must be carried upon the ball.

(*c*) All steering connections secured with bolts or pins must have such bolts threaded and fitted with nuts, which latter must be locked or pinned.

(*d*) The steering gear, including the arms and other connections thereof, must be of ample strength and as far as possible protected from damage by collision.

122. *Lock nuts.*—All moving parts and all parts subject to severe vibration connected by bolts or studs and nuts must be fastened by lock nuts, or by nuts and efficient spring or lock-nut washers or by castellated nuts and split pins so as to prevent their working or coming loose.

123. *Vibration or noise.*—Any vehicle with lamp brackets or other fittings loose, and likely to cause unnecessary noise, will be regarded as unfit for public service.

The machinery and all parts of the vehicle must be so constructed that no undue noise or vibration arises from its use. Exhaust silencer "cut outs" are not to be fitted.

124. *Emission of smoke from exhaust.*—The lubrication of the engine and the carburation must be so controlled that smoke shall not be emitted with the exhaust or from any other part.

125. *Carburettors.*—Carburettors or other petrol receptacles, unless they are suitably encased or screened, must not be placed in close proximity to magnetos, connections of wires carrying electric current or to engine exhaust pipe.

126. *Undershield.*—When a guard tray or undershield is fixed beneath the engine and adjacent machinery, it shall be so constructed that any overflow of petrol will not be retained in the tray.

127. *Fuel tanks.*—(*a*) Fuel tanks must be so placed that they are not liable to be readily damaged by collision and that any overflow shall not fall upon any wood-work or accumulate where it can be readily ignited.

(*b*) In cases of gravity feed, the petrol supply pipe must be so led that a cock can be provided which shall be visible and readily accessible at all times from outside the vehicle to shut off the main supply.

(*c*) Special care must be taken that the filler caps of all petrol tanks are tightly fixed in position. The vent hole (if any) must be protected from fire penetration and must be designed to prevent petrol being splashed over.

128. *Exhaust pipe.*—The exhaust pipe must not be fixed in such a position that oil, or any vaporisable or inflammable material is likely to be dropped upon it.

Effective means shall be adopted to prevent the heat of the motor, generator or the exhaust pipe and its connections from injuriously affecting any parts of the vehicle or the comfort of the passengers.

129. *Fire extinguishers.*—Suitable and approved appliances for extinguishing fire must be carried in such a position and condition as to be readily available for use.

130. *Grease dropping.*—The chassis must be so constructed as to prevent oil or grease from the bearings or other parts dropping on to the roadway.

131. *Insulation.*—All electric leads must be adequately insulated and protected against injury and so placed as not to be a cause of danger. Uninsulated wiring will not be allowed.

132. *Body dimensions.*—(*a*) *Height* (*inside*)—From the top of seat cushions to the hood at the lowest part must not be less than 38 inches.

NOTE.—The measurement will be taken when the seat spring is depressed.

(*b*) *Width* (*inside*).—Minimum must not be less than 45 inches.

(*c*) *Width of doorway.*—Must not be less than 20 inches, and the door must be so constructed that it opens to the fullest extent and causes no inconvenience to passengers provided that in a touring car

type of body where the entrances inside the door are partially obstructed by the back of the front seats a minimum width of 18 inches must be maintained for the entrances.

(*d*) *Width between seats.*—Where the cab is provided with front and back seats, the measurement between the front edges of the cushions must not be less than 19 inches.

(*e*) *Dimensions of seats.*—The back seat shall not be less than 45 inches in length or 16 inches in width. A folding seat of approved pattern for one passenger not less than 15 inches in length or 14 inches in width will be allowed in the front of the passenger compartment provided there is a minimum space of 33 inches between the back of the driver's seat and front of the back seat.

This rule shall not apply to "Baby" cars allowed to ply for hire in the district of Darjeeling.

133. *Cushions.*—Where cushions are provided such cushions shall be stuffed and covered with suitable material.

134. *General condition.*—All the appointments and furniture of a motor cab shall be maintained in good order and repair, the paint and varnish in good condition and the inside perfectly clean. The floor shall be covered with a suitable mat.

135. *Luggage.*—Every motor cab shall be provided with adequate means for the conveyance of 10 seers of luggage for each passenger for which the cab is licenced to carry.

136. *Carrying capacity.*—The carrying capacity of all motor cabs shall be fixed by the District Magistrate in the manner hereinafter provided and shall be shown legibly on the inside of the cab and outside at the front and at the rear:—

(*a*) Where separate seats are provided for each passenger, one person shall be counted for each separate seat, excluding the driver's seat,

(*b*) Where the vehicle is fitted with continuous seats, one person shall be counted for each complete length of 15 inches in a straight line along the length of the front of each seat, but shall not include the driver's seat.

Provided that children under twelve years of age shall be counted as half-passengers for the purpose of this rule. Infants in arms shall not be taken into account as passengers.

137. *Accumulators.*—When accumulators, or other electrical appliances, are used for the purpose of providing the means of illumination, they must be so placed that they cannot be a source of danger and must be of approved type and capacity.

138. *Inflammable fittings.*—No celluloid or xylonite fitting shall be placed inside or outside any motor cab:

Provided that this rule shall not apply to the side curtains and hood and the accumulators contained in such cab if suitably boxed.

139. *Advertisements.*—No printed, written or other such matter, except particulars required by these rules, shall appear on the outside or inside of a motor cab or be carried by way of advertisement.

140. *Fittings.*—No fittings, except such as have been approved by the District Magistrate, shall be attached to or carried either upon the inside or outside of the cab.

141. *Lighting.*—The lamps required by the rules relating to motor vehicles must be thoroughly effective for the purpose for which supplied and the proprietor will be held responsible for the maintenance of the lamps in this condition.

A lamp or lamps must be fixed to comply with the rules relating to motor vehicles. An approved form of lamp must also be provided to illuminate the back number.

Side or rear lamps other than electric must not be fixed in close proximity to petrol tank.

142. *Registered number of motor cab.*—The registered number of motor cab shall be shown clearly on the inside of the cab in an approved manner.

143. *Spare wheel.*—Every motor cab shall carry at least one spare inflated tyre and wheel or rim or other approved device which can if necessary be quickly fitted to any wheel.

144. Every motor cab, if an open car, shall be provided with a hood and side curtains in serviceable and water-tight condition, or, if a closed car, the roof shall be water-tight and the windows shall be in good order.

Conditions of fitness of motor omnibuses.

145. Every motor vehicle intended for registration or renewal of registration as a motor omnibus shall be produced before the District Magistrate or such other officer appointed by him for inspection.

Such inspecting officer shall satisfy himself that the following requirements are complied with.

146. *Conveyance of goods or merchandise.*—No motor omnibus registered for the conveyance of passengers on hire shall be used on hire for the transport of merchandise or goods other than the personal effects of passengers.

147. *Luggage grid.*—A luggage grid of a pattern approved by the District Magistrate shall be fixed on the roof of every single decked motor omnibus.

148. *Weight.*—The total weight laden and complete for service must not exceed 9 tons and the weight on any one axle must not exceed 5½ tons. In the case of approved types of rigid frame six wheelers the laden weight must not exceed 12 tons and the weight on any one axle must not exceed 4½ tons.

NOTE.—112 lbs. to be allowed for each passenger as well as the driver and conductor in calculating the total laden weight.

149. *Length.*—The maximum overall length, exclusive of the starting handle, measured from the dumb irons must not exceed 26 feet:

Provided that the District Magistrate may at his discretion permit for certain selected routes a maximum overall length of 30 feet.

150. *Width.*—The overall width must not exceed 7 feet 6 inches.

151. *Overhang behind rear wheels.*—The overhang behind the rear wheels measured from the centre of the rear axle shall not exceed 7/24ths of the overall length of the vehicle.

NOTE.—In the case of rigid frame six-wheelers, the overhang is measured from a point 4 inches in rear of a straight line joining the centre points of rear and middle axles.

152. *Wheel track.*—The distance between the centre lines of the track of the front wheels and of the rear wheels must be as nearly as possible the same, and must not be less than 72 per cent. of the overall width for a double deck vehicle and 69 per cent. of the overall width for a single deck vehicle. In no case may the distance between the centre lines of the tracks of the front wheels be less than the distance between the centre lines of the tracks of the rear wheels, nor shall the excess be more than five inches. In all cases wheel track measurements shall be taken horizontally in line with the axles.

153. *Road wheels.*—When the axle-weight of any axle exceeds 4 tons, the diameter of the tyres on the wheels of such axle, unless they are pneumatic, shall not be less than 1,010 m.m. Where pneumatic tyres are used, they shall not be less than 950 m.m. All omnibuses must be provided with pneumatic tyres.

154. *Brakes.*—(*a*) Brakes must be of sufficient strength and be capable of stopping and holding the vehicle under all conditions.

(*b*) There must be two entirely independent and efficient braking systems or one efficient braking system having two independent means of operation in each case so designed and constructed that notwithstanding the failure of any part of any braking system there shall still be available for application by the driver to not less than half the number of the wheels of the vehicle brakes sufficient under the most adverse conditions to bring the vehicle to rest within a reasonable distance.

In all cases the brakes operated by one of the means of operation shall be capable of being applied by direct mechanical action without the intervention of any hydraulic, electric or pneumatic device.

Where one braking system only is fitted—

(*i*) all the wheels of the vehicle shall be fitted with brakes all of which are operated by one of the means of operation; and

(*ii*) one at least of the means of operation shall cause brakes to be applied by direct mechanical means, and not through the transmission gear, to not less than half the number of wheels of the vehicle.

Where two independent braking systems are fitted the brakes of at least one of the braking systems shall act directly and not through the transmission gear on at least half the number of wheels of the vehicle.

For the purpose of this rule—

(*i*) not more than one front wheel shall be taken into account in reckoning half the number of the wheels of the vehicle;

(*ii*) braking systems shall not be deemed to be entirely independent if they are capable of being applied by the same means of operation;

(*iii*) any shaft, fixed or moving, to which any part of a braking system or any means of operation thereof is connected or by which it is supported shall be deemed to be part of that system.

(*c*) The brakes of one of the braking systems shall be applied by a pedal.

(*d*) The operation of either brake must not in any case declutch the engine from the transmission gear:

Provided that this clause shall not apply to motor vehicles already registered and in use nor to the motor vehicles in stock with dealers or importers on the date on which these rules come into force.

(*e*) The brake gear must be properly adjusted and nothing shall be placed on the vehicle which will prevent easy access to the brakes for adjustment.

(*f*) All brake connections secured with bolts or pins must have such bolts threaded and fitted with nuts, which latter must be locked or pinned.

155. *Springs.*—(*a*) *Rear.*—The rear springs must be attached to, or bear upon, the back axle or axle casing as near to the road wheels as possible, and the distance from outside to outside must not be less than 50 per cent. of the overall width of the vehicle.

(*b*) *Front.*—The front springs must be as wide apart as possible, and not less than 42 per cent. of the overall width of double deck vehicles and 37 per cent. of the overall width of single deck vehicles from outside to outside, provided that if the width of the rear springs from outside to outside is 53 per cent. of the overall width of the vehicle or more, the minimum width between the front springs as provided above may be reduced by 1 inch.

156. *Steering arms and connections.*—(*a*) The steering mechanism must be so constructed or arranged as to avoid the possibility of overlock.

(*b*) The ball and socket joints of steering connections, when such are used, should not be pendant, but the longitudinal or transverse rods must be carried upon the ball.

(*c*) All steering connections secured with bolts or pins must have such bolts threaded and fitted with nuts, which latter must be locked or pinned.

(*d*) The steering gear, including the arms and other connections thereof must be of ample strength and so far as possible protected from damage by collision.

157. *Clearance.*—The omnibus shall be so constructed that no portion of it within the limits hereinafter specified shall be nearer to the ground than ten inches, allowance being made for the wear of tyres, set of springs and other causes likely to reduce the clearance, so that a minimum clearance of ten inches shall at all times be maintained. The specified limits extend in length rearwards from the foremost part of the omnibus (excluding the starting handle and the body work) for a distance of fourteen feet six inches or, in the case of an omnibus whose back axle is less than fourteen feet six inches in rear

of the foremost part as aforesaid of the omnibus up to but not including the back axle, and in width for a distance on either side of the centre line of the omnibus of not less than one-third of the front wheel track.

158. *Lock nuts.*—All moving parts and all parts subject to severe vibration connected by bolts or studs and nuts must be fastened by lock nuts, or by nuts and efficient spring or lock nut washers or by castellated nuts and split pins so as to prevent their working or coming loose.

159. *Guard for sprockets.*—Driving chains and sprockets must be protected by a suitable guard.

160. *Fuel tanks.*—(*a*) Fuel tanks must be so placed that they are not liable to be readily damaged by collision and that any overflow shall not fall upon any woodwork or accumulate where it can be readily ignited.

(*b*) In cases of gravity feed, the petrol supply pipe must be so led that a cock can be provided which shall be visible and readily accessible at all times from outside the vehicle to shut off the main supply.

(*c*) The filling point must be outside the passenger compartment and special care must be taken that the filler caps of all petrol tanks are tightly fixed in position. The vent hole (if any) must be protected from danger of fire penetration, and must be designed to prevent petrol being splashed over.

161. *Rattling of windows, etc.*—Effective means must be provided to prevent the rattling of venetians, window frames and glasses.

162. *Exhaust pipe.*—The exhaust pipe must not be fixed in such a position that oil, or any vaporisable or inflammable material, is likely to be dropped upon it.

Effective means shall be adopted to prevent the heat of the motor, generator, or the exhaust pipe and its connections from injuriously affecting any parts of the vehicle or the comfort of the passengers.

163. *Carburettors.*—Carburettors or other petrol receptacles must be suitably encased or screened, or so placed that no leakage from them shall fall upon any magneto, or on any connections or wires carrying electric current.

164. *Turning circle.*—Each vehicle must be able to turn in either direction in a circle not exceeding 60 feet in diameter as determined by the extreme wheel track. In turning the wheels must not foul other parts of the vehicle.

165. *Hub caps.*—Hub caps must not project more than 3½ inches beyond the rim of the wheel.

166. (*a*) *Driver.*—No person, except a learner, fitter or other official when specially authorised by the proprietor (such person to carry a special pass or badge) or a person authorised by the District Magistrate shall be allowed to ride beside the driver at any time.

(*b*) Nothing shall be so placed or permitted on the vehicle which will interfere with free signalling by the driver either by hand signals or by a mechanical contrivance or which obstructs a free view of the driver to the left.

167. *Wind screens.*—Front glass wind screens (if any) must be securely fastened to the body of the vehicle and be of such a size

and construction that the view of the driver shall at all times and under all conditions be clear and unobstructed. Adjustable sections (if any) must be provided with adequate locking or fixing devices.

168. *Machinery, body and fittings.*—(*a*) The body must be securely affixed to the chassis.

(*b*) The machinery body and fittings shall be in a good state of repair, so that no undue noise or vibration arises from them.

169. *Floor boards.*—(*a*) Floor boards must be strong and well fitted.

(*b*) Holes may be bored in floor boards for drainage purposes, but are prohibited for any other purpose.

170. *Pillars.*—All body pillars must be of sufficient strength, the joints properly made, and all parts liable to severe stress properly ironed and stayed.

171. *Window rails.*—When the side lights or venetians are made to be lowered, provision must be made (by means of guard rails or otherwise) to protect the arms of seated passengers from being thrust through and injured by passing vehicles, or the extent to which the side lights can be lowered must be limited so that such protection may not be needed.

172. *Entrances and exits.*—(*a*) Where the entrance is not at the rear end, an emergency door opening outwards shall be provided behind and clear of the rear wheels. This door must be easily accessible to the passengers and so fastened as to be readily opened in case of need both from the inside and from the outside.

(*b*) A grab handle must be fitted to each doorway to assist passengers in mounting or alighting from the vehicle.

(*c*) No doorway shall be less than 21 inches in width.

173. *Height (inside of body).*—The height inside measured at the centre line of the vehicle from the top of the floor battens of the lower deck to the lower edge of the hoop sticks or other such projections must not be less than 5 feet 8 inches.

174. *Breadth (inside of body).*—When the seats are placed lengthwise, the surface of any portion of the seat against which the back of the passenger is to rest shall be at least 54 inches from the surface of the corresponding portion of the seat facing it.

175. *Seats.*—At least 15 inches, measured in a straight line along the length of the front of each seat, must be allowed for each passenger on every seat, which seat must be fit and convenient for sitting on. Cross or "garden" seats must be so fitted that—

(*1*) when facing in the same direction a clear space of a minimum width of 25 inches must be provided in front of the back of each seat at all points measured along the top of the seat back; and

(*2*) when facing each other there must be a clear space between the surface of any portion of the seat against which the back of the passenger is to rest and the surface of the corresponding portion of the seat facing it of a minimum width of 3 feet and 11 inches and a clear space between all parts of the front of each seat of a minimum width of 1 foot 7 inches:

Provided that children under twelve years of age shall be counted as half-passengers for the purpose of this rule. Infants in arms shall not be taken into account as passengers.

176. *Seats at wheel arch.*—Where seats are placed over the wheel arch, they must be placed in such a position as not to cause discomfort to passengers using them.

177. *Seat back.*—The backs of all seats must be so closed or otherwise constructed as to prevent, as far as possible, the pockets of passengers being picked.

178. *Gangways and access to seats.*—(*a*) No form of seating accommodation across or in the gangways will be permitted.

(*b*) The width of the gangways must not be less than 14 inches up to seat level. Above seat level, the width of the gangways must not be less than 16 inches.

(*c*) Nothing will be placed or permitted to be placed on a vehicle which will obstruct the gangways or which will impede the free ingress or egress of passengers.

179. *Steps.*—(*a*) The lowest step for entering into the vehicle when empty must not be more than 17 inches or less than 10 inches above the ground.

(*b*) The risers of all steps must be closed and the treads of each fitted with an approved form of tread-plate.

180. *Wing guards.*—Suitable wings must be provided above each wheel to prevent mud-splashing as far as practicable.

181. *Insulation.*—All electric leads must be adequately insulated and protected against injury and so placed as not to be a cause of danger. Uninsulated wiring will not be allowed.

182. *Fire extinguishers.*—Suitable and approved appliances for extinguishing fire must be carried in such a position and condition as to be readily available for use.

183. *Ventilation.*—There must be adequate ventilation without the necessity of opening the main windows.

184. *Signal apparatus.*—Efficient means must be provided to enable passengers, both inside and outside, to signal to the driver or conductor when required.

185. *Grease dropping.*—The chassis must be so constructed as to prevent oil or grease from the bearings or other parts dropping on to the roadway.

186. *Undershield.*—When a guard tray or undershield is fixed beneath the engine and adjacent machinery, it shall be so constructed that any overflow of petrol will not be retained in the tray.

187. *Inflammable fittings.*—Celluliod, xylonite or other inflammable fittings shall not be used inside or outside the vehicle, but this shall not apply to accumulator cells.

188. *Cushions.*—Where cushions are provided for seats, they must be covered with leather, cloth of good quality, rattan or other suitable material.

189. *Lighting.*—An omnibus shall be suitably lighted as far as the interior is concerned and at every other necessary point in a manner sufficient to provide for the safety of the passengers. Such lighting shall be masked so as not to interfere with the vision of the driver. Only electric lighting will be allowed.

190. *Horn.*—An approved pattern of hand bulb horn having a single deep toned note for giving audible warning of approach and position of the vehicle must be provided.

191. *Destination board.*—Route board of a pattern approved by the District Magistrate shall be fitted to the front of each vehicle and shall clearly show in letters painted in black on white ground of not less than 4½ inches high the description of the route, the terminal points and main points of the route.

Where the District Magistrate so directs, such route board shall be illuminated by night in the manner approved by the District Magistrate for the guidance of intending passengers.

Destination board showing the terminal points of the route and the course to be followed between such points may be fitted to the side of the vehicle.

192. Particulars to be painted on omnibus—

(*a*) the weight and speed limit;

(*b*) the full name and surname of the proprietor, to be painted on each side clear of the wheels;

(*c*) the words "Bengal Motor Omnibus" and the number on the number plate, to be painted inside the omnibus and also outside at the back on the near side;

(*d*) the fares, to be legibly painted inside the omnibus; and

(*e*) the number of passengers which the vehicle is licensed to carry, to be legibly painted inside and outside the vehicle.

The above particulars shall be legibly painted in black or white letters not less than 1 inch in height and of proportionate thickness.

193. *Advertisements.*—(*1*) No advertisement in black and white will be allowed on the front of the vehicle nor will any writing or lettering be permitted when its form or position is such as to hide, or in the opinion of the District Magistrate, to interfere with the easy legibility of the destination indicator or route-boards.

(*2*) No printed, written or other matter shall appear on the outside or inside of the vehicle or be carried by way of advertisement, except such, if any, as may be approved by the District Magistrate.

(*3*) Advertisements approved by the District Magistrate may be placed on the vehicle in the following positions:—

(*a*) *Single deck vehicles*—

Outside.—(*i*) *Rear*—Rear panels under window.

(*ii*) *Sides*—On roof not more than 12 inches in depth.

(*iii*) *Inside*—Roof boards above ventilating windows.

(*b*) *Double deck vehicles*—

Outside.—(*i*) *Front*—From the roof to top of guard rails on either side, leaving a space of 3 feet in the centre for the routes, etc.

(*ii*) *Rear*—From the canopy to top of guard rail upon that part not required for the destinations and routes. Step treads in corrugated plates, etc.

(*iii*) *Sides*—From the roof to the top of guard rails the whole length.

(*iv*) *Inside*—Roof boards, above ventilating windows.

(*c*) *Top deck—Outside*—Seat backs.

194. *Protection of passengers against the weather.*—(*1*) The side lights of motor omnibuses shall consist of either glass windows capable of being partly or completely opened or venetians capable of being lowered.

(*2*) The portion of the passenger compartment of motor omnibuses which is open to the weather and is not protected by glass windows or venetians shall be supplied with screens of suitable canvas capable of being unrolled and fixed in position with suitable fastenings.

Additional requirements for double deck vehicles.

195. *Distribution of seats.*—The ratio of the passenger seating capacity of the top deck to that of the lower deck must not exceed eight to seven, except in the case of approved types of rigid frame six-wheelers, where four additional top-deck seats may be permitted.

196. *Guard rail.*—The top of the side guard rails must be at least 3 feet from the top of the roof battens at the side, and 18 inches above the highest part of the seat. The front and back rails must follow the camber of the roof and be at least 3 feet 3 inches high when measured from the top of the roof battens.

197. *Aperture at landing board.*—No aperture must be left at the top landing board through which a passenger might inadvertently step.

198. *Height.*—From the ground to the highest point of the roof of the lower deck the height must not be greater than 9 feet 3 inches.

199. *Platforms.*—The length of the platform, if at the rear, must in no case be less than 36 inches. If the platform is not at the rear, then the length must in no case be less than 30 inches.

200. *Staircase screens.*—The outer stringer of the staircase should be so constructed, or a band should be so placed, as to act as a screen to person ascending or descending.

201. The top of every double deck motor vehicle to be used for the conveyance of passengers shall be provided with proper roof.

Part V.

I.—Additional Rules Applicable to the Darjeeling District.

202. Unless provided with pneumatic tyres and except as provided in this part of the rules, no motor vehicle shall be driven on any road in the district of Darjeeling.

203. Motor trucks for removing refuse may ply between 4 and 7 a.m., and motor trucks for watering roads may ply between 2 and 3 p.m., on the roads round the Observatory Hill and on Auckland Road (from Chowrasta to Tonga Road). Conservancy trucks may ply on Robertson and Mount Pleasant Roads.

204. (*i*) Motor cars not exceeding 30 hundred-weights in weight, when loaded, may be driven on the following roads:—

(*1*) The Sukna-Adilpur Road.

(*2*) The Matigara-Kurseong Road from 9th mile to Pankhabari.

(*ii*) Motor cars not exceeding 35 hundred-weights in weight, when loaded, may be driven on the following roads:—

(*1*) The Teesta Valley Road from Sevoke to Kalijhora.

(*2*) The Teesta Valley Road from Sevoke to Giellikhola, provided that passengers shall disembark and cross the Rungli Bridge on foot.

(*3*) Lachen Road from Teesta to Rangpo.

NOTE.—Motor omnibuses and motor lorries shall not be driven on the roads named in (*2*) and (*3*).

(*iii*) Motor cars not exceeding 40 hundred-weights in weight, when loaded, may be driven on the following roads:—

(*1*) All roads in the Terai with the exception of the Sukna-Adilpur Road.

(*2*) The Hill-Cart Road from Sukna to Darjeeling.

(*3*) The Cart Road from Siliguri to Sevoke.

(*4*) The Teesta Valley Road from Giellikhola to the Teesta Bridge.

(*5*) The Rishi Road from Teesta Bridge to Kalimpong including the new Teesta Bridge, provided that no motor omnibus or motor lorry shall be driven on Rishi Road.

(*6*) The Pankhabari Road from Kurseong Railway Station to the entrance to Constantia.

(*7*) Rinkingpong Road.*

(*8*) Upper Cart Road.*

(*9*) Lower Bridle Road.*

(*10*) West Rickshaw Road.*

(*11*) Burdwan Road.

(*12*) Bank Road from Kurseong Railway Station to the gate of the residence of the Maharajadhiraja of Burdwan.

*In Kalimpong subdivision of the district of Darjeeling.

(*13*) The Lebong Cart Road.

(*14*) The Cart Road from Jorebungalow to Takdah Cantonment.

(*15*) The Cart Road from Jorebungalow to Jalapahar.

(*16*) Mackenzie Road.

(*17*) Tonga Road.

(*18*) Greer Road.

(*19*) Robertson Road from Mackenzie Road to the Municipal Motor Stand.

(*20*) Tukvar Road from its junction with Lebong Cart Road to Fernhill Gate.

(*21*) Ferndale Road from Bazar to Lewis Jubilee Sanitarium.

(*22*) Pyari Talukdar Lane (formerly known as Dharamsala Road) from Ferndale Road to the Ropeway Upper terminal.

(*23*) Hiralal Ghosh Road (formerly known as Babuganj Road) between Pyari Talukdar Lane and Jail Road.

(*24*) Jail Road from its junction with Hiralal Ghosh Road to the bazar.

(*25*) Road from Bazar Post Office to Eden Sanitarium.

(*26*) Lebong Circular Road (formerly known as Western Lebong Road) from the Lebong Cart Road to Rangeet Road.

(*27*) Laldighi Road from Cart Road to its junction with Bollen Villa Road.

(*28*) Ghum-Simana Road:

Provided that motor cars licensed to carry goods, or passengers exceeding five in number including the driver, shall not be driven on this road from Sukiapokhari to Simana without special permission of the Deputy Commissioner to be previously obtained in each case.

(*29*) Waddell Road from Bazar to Cart Road.

(*30*) Ghum Pahar Road from the Cart Road up to Ghum Monastery.

(*31*) The Sukhiapokhari-Nagri Spur Road.

(*32*) The Western Lebong Road (portion below the Cart Road).

Provided that the Deputy Commisisoner, Darjeeling, having regard to the safety of the road and the condition of the vehicle, may, by written order,

(*a*) permit any motor car licensed to carry passengers for hire, which was duly registered and plying on the Hill Cart Road on or before the 14th January 1933, to continue to ply thereon at any laden weight to be fixed by him for the vehicle and not exceeding 45 cwts.:

(*b*) exempt from the laden weight limit—

(*i*) any motor car which does not ply for hire nor is licensed to carry goods and which is principally kept in the district of Darjeeling, provided that the car was actually in use in the district on or before the 14th January 1933, and

(*ii*) any motor car, which does not ply for hire nor is licensed to carry goods and which is not principally kept or used in the district of Darjeeling, and

(*c*) at any time modify or withdraw such permission or exemption.

(*iv*) Motor cars of the following specifications may be driven on the following roads in the Terai of the district, namely:—

(*1*) Siliguri-Naxalbari Road.

(*2*) Tirihana-Bagdogra Road.

(*3*) Darjeeling Hill Cart Road—from Siliguri to Sukna.

(*4*) Panighatta-Kudma Road.

(*5*) Kudma-Tirihana Road.

(*6*) Matigara-Kurseong Road—up to the 9th mile post only:—

Specifications.

Motor cars the sum of the axle-weights of which does not exceed five tons, provided that if the motor car is provided with six road wheels—

(*a*) mounted on three separate axles, the sum of the axle-weights shall not exceed seven tons and the axle-weight on any one axle shall not exceed four tons, or

(*b*) of which two are mounted on the front axle and four on the rear axle, the two rear wheels on each side being mounted one in front of and one behind the axle, the axle-weight on the rear axle shall not exceed five tons and the sum of the axle-weights shall not exceed seven tons.

(*v*) Light motor cars of the following specifications, namely, (*a*) weight unladen, up to 15 cwts., (*b*) wheel-base, up to 7 feet 9 inches, (*c*) overall length, up to 11 feet, and (*d*) overall width, up to 4 feet 7 inches, may be used for passenger traffic only on the following roads, namely:—

(*1*) D. B. Road No. 18C (from 4th mile on Takdah Cantonment Road to Takdah Club).

(*2*) D. B. Road No. 6 (from 6th mile on P. W. D. Road to Glenburn Factory).

(*3*) D. B. Road No. 1 (from Singamari to Singla Tea Estate).

(*4*) D. B. Road No. 12 (from Sonada to Balasun river).

(*5*) D. B. Road No. 21 (from Sonada Brewery to Nahore Tea Estate).

(*6*) D. B. Road No. 10 (from Rungbul to Dhooteria Tea Estate).

(*7*) The D. B. Road from Takdah Cantonment to Riyang.

(*8*) The Peshoke Road from the 6th mile to the Teesta Bridge.

(*9*) Singtam Road to Factory.

205. Light motor cars of the specifications mentioned in sub-rule (*v*) of rule 204 may use the road from Jorebungalow to a point 90 yards

beyond the 2½ mile post at Senchal subject to compliance with the following conditions, namely:—

(*i*) that every down car shall proceed on indirect gear the whole way from Senchal to Jorebungalow;

(*ii*) that every down car shall stop on the approach of an up car and shall make way by reversing up the hill if necessary;

(*iii*) that every car shall stop if so requested by a person riding or in charge of a horse or pony, and, if necessary, stop the engine; and

(*iv*) that every car shall obey road signs and notices erected by the Public Works Department.

206. Except in the Siliguri subdivision of the district of Darjeeling, no motor vehicle shall be driven in that district with the engine free, that is, with the gear lever in neutral, the clutch depressed or with any other device put into operation which frees the engine from the driving wheels so that the engine does not act as a brake when the motor vehicle is going downhill.

207. (*1*) (*i*) Notwithstanding anything contained in rule 24, no person shall drive a motor omnibus or motor lorry in the district of Darjeeling, exclusive of the Siliguri subdivision, unless he is above the age of 21 years, has previously obtained a licence to drive a light motor car and has passed the special driving test prescribed in Appendix C to these rules.

(*ii*) No fee shall be charged for the special driving test.

(*2*) The following endorsement shall be made on the licence of a driver who has passed the special driving test:—

"Permitted under rule 207 to drive a motor omnibus/lorry in the district of Darjeeling, exclusive of the Siliguri subdivision."

Licensing Officer.....

Date.....

208. Notwithstanding anything contained in any other rule, no person shall drive a motor vehicle in the hill portion of the district of Darjeeling at a speed exceeding 20 miles per hour or at a speed exceeding 10 miles per hour within the limits of any municipality or in any bazar or round blind projecting corners within the said district.

NOTE.—The following areas, roads and portions of roads shall, among other places, be deemed to be bazars for the purpose of this rule, namely:—

(*1*) From the railway engine shed, Kurseong, to the Clarendon Hotel.

(*2*) From the railway engine shed, Kurseong, to the entrace to Constantia.

(*3*) From the Peshok Road turning (Jorebungalow) to the Ghum Post Office.

(*4*) The Cart Road between Darjeeling railway station and the Hospital Jhora.

(*5*) The whole of the Cart Road within the limits of the Jalapahar and Katapahar Cantonments.

(*6*) From the Mess House, Takdah, to the end of Takdah Cart Road.

(*7*) Darjeeling Chowk, Waddell Road and Mackenzie Road.

(*8*) Siliguri Union Board area.

209. The registered owner of a heavy motor vehicle kept in the district of Darjeeling, or of a motor vehicle which ordinarily plies for hire for the conveyance of passengers in that district, shall cause such vehicle to be produced before the Deputy Commissioner, or an officer designated by him in this behalf, at intervals of not more than three months.

210. When two motor vehicles meet, the down vehicle shall be brought to a standstill on the left hand side of the road on the first information of the approach of the other vehicle and shall not proceed on its journey until the up vehicle has passed:

Provided that this rule shall not apply to motor-cycles without side-cars.

211. In the hill portion of the district of Darjeeling and the Teesta Valley motor cars shall not carry luggage in excess of the following scale:—

No. of persons travelling.	Maximum amount. lbs.
7	120
6	160
5	200
4	240
3	280
2 or less	320

These restrictions are additional to the restrictions imposed as regards maximum laden weight.

II.—Rules applicable to the Darjeeling Hill Cart Road between Sukna and Ghum.

The following rules shall apply to the Darjeeling Hill Cart Road between Sukna and Ghum:—

212. All motor vehicles passing Sukna shall be liable to be weighed according to the procedure laid down below:—

(*1*) Any motor vehicle which appears to exceed 40 cwts. in weight or to have a heavy load whether of passengers or goods or both shall be stopped at Sukna and weighed on behalf of the Public Works Department by the Darjeeling-Himalayan Railway. No passenger may leave the vehicle and no article may be unloaded from the vehicle until it has been weighed.

(*2*) The station master or the assistant station master, Sukna, or any police officer on duty at Sukna, is authorised to weigh any motor vehicle or to allow it to proceed without being weighed. Vehicles shall be weighed without unnecessary delay.

(*3*) If any motor vehicle is found to have a gross weight in excess of that permitted by these rules or by any special permission or exemption granted under the proviso to rule 204 (*iii*) the weighing officer will take full particulars of the vehicle and the driver's licence and will report the matter to the Superintendent of Police, Darjeeling. The certificate of the station master shall accompany such reports. In the case of an upward vehicle no such report shall be made if the driver or person in charge reduces the weight within the permissible limit and continues his journey at the reduced weight.

(*4*) No upward vehicle which does not exceed 45 cwts. shall be refused a proceed order issuable under rule 213 on the ground of excess weight, provided that the driver or the person in charge signs the counterfoil of the proceed order and acknowledges thereon the gross weight of his vehicle.

213. (*1*) Every driver of a motor vehicle shall stop at each railway station (including Sukna and Ghum), and before proceeding to the next station shall ascertain from the station master, who shall give him the information in writing, whether any train or motor vehicle has left the said next station on its way to the station where he is stopping and shall also inform the station master whether he intends to go as far as the next station or whether he intends to halt on the way, and, in the latter event, to state the time when he expects to pass the next station. The driver of the vehicle shall acknowledge the receipt of the information in a book to be kept for the purpose. To avoid delay at Ghum downward cars should inform Darjeeling Railway Station of their departure: upward cars should inform Panchanai Railway Station to avoid delay at Sukna.

(*2*) At the starting station of a motor vehicle no proceed order shall be issued over any section until all trains and motor vehicles proceeding in the opposite direction, which have not been warned, have arrived at the starting station of the motor vehicle:

Provided that at any station a motor vehicle shall not be detained more than 25 minutes in expectation of the arrival of unwarned trains and motor vehicles proceeding in the opposite direction. After the lapse of this period, the vehicle should be allowed to proceed with the necessary warning. If no train is on its way from the next station the driver may proceed, and on his so doing the station-master shall take steps immediately to advise the next two stations ahead of having started in order that drivers of subsequent trains and motor vehicles may be made aware of the presence of a motor vehicle on the section. This rule applies to all motor vehicles and motor cycles with or without side cars:

Provided that if a train proceeding in the same direction as the car gets line-clear to a certain point, the car may also proceed to that point to await the train crossing from the opposite direction.

(*3*) The driver of every down-going motor vehicle when taking "proceed orders" at Tung Railway Station shall state whether or not he is going past Kurseong. The driver of every up-going vehicle shall give similar information at Mahanadi Railway Station.

(*4*) No proceed order is required—

(*a*) between 7-30 p.m. and 6-30 a.m., from the 1st April to the 15th October; and

(*b*) between 6 p.m. and 6-30 a.m., during the rest of the year.

111.—Rules applicable to motor lorries for use on the Darjeeling Hill Cart Road between Sukna and Ghum.

214. Until further orders, the number of motor lorries, that is to say, motor vehicles specially adapted and used for the conveyance of goods, shall be limited to forty including motor mail vans for the purpose of plying on the Darjeeling Hill Cart Road between Sukna and Ghum.

215. (*1*) The Deputy Commissioner, after consulting the General Manager, Darjeeling-Himalayan Railway, and such other interested persons as he may deem necessary to consult, may, with the approval of the Commissioner of the Rajshahi Division, regulate the times during which motor lorries may ply between Ghum and Sukna or any intermediate points on the road.

(*2*) Except in case of emergency, the nature of which shall be recorded, such timings shall not be altered without fresh consultation of the persons mentioned in sub-rule (*1*), and any such alterations shall be subject to the approval of the Commissioner of the Rajshahi Division.

(*3*) The times so fixed or altered will be published by posting notices in conspicuous places in Siliguri, Darjeeling and all intermediate railway stations.

Appendix A.

[Rules 40 and 41.]

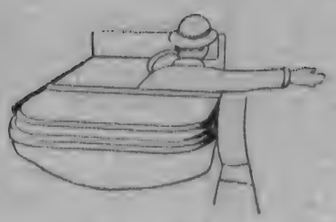

Signal No. 1.

("I am going to TURN to my RIGHT.")

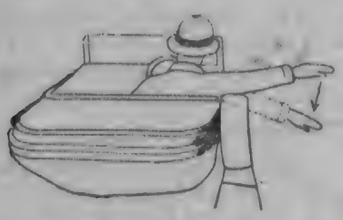

Signal No. 2.

("I am going to SLOW DOWN or TURN to my LEFT.")

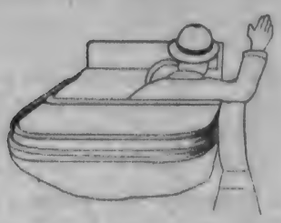

Signal No. 3.

("I am going to STOP.")

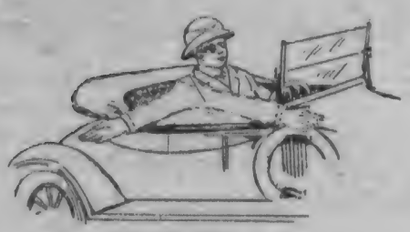

Signal No. 4.

("You may OVERTAKE me on my RIGHT.")

Signal No. 5.

("I want to GO STRAIGHT AHEAD.")

Signal No. 6.

("I want to TURN to my LEFT.")

Note regarding Road Signs.

[*See* rule 48 (*2*).]

The designs of signs in Appendix B have been prescribed by the Government of India. The designs in Part I are of warning signs, that is to say, of danger signs erected merely for the information of the public. The first design shows how these warning signs are to be erected.

The designs in Part II are prohibitory or mandatory signs drawing attention to local restrictions or limits and have force of law. Design No. 1 shows how these signs are to be erected.

The design in Part III merely indicates where parking is to be allowed.

While there is no necessity to adopt standard specifications in respect of the posts upon which road signs are to be erected, the following points should be borne in mind—

(*a*) that they should be rigid and that the height from the ground to the bottom of the triangle should not be more than 9 feet for country roads, or 8 feet if in towns and particularly if reflecting devices are to be used on the signs;

(*b*) that a space of 6 inches should be left between the bottom of the triangle and the top of the explanatory plate below it;

(*c*) that the posts should be painted in black and white bands, 9 inches deep; and

(*d*) that the road signs should always be on the left of the road approaching the object of which they give notice.

Appendix B.

PART I.

WARNING SIGNS.

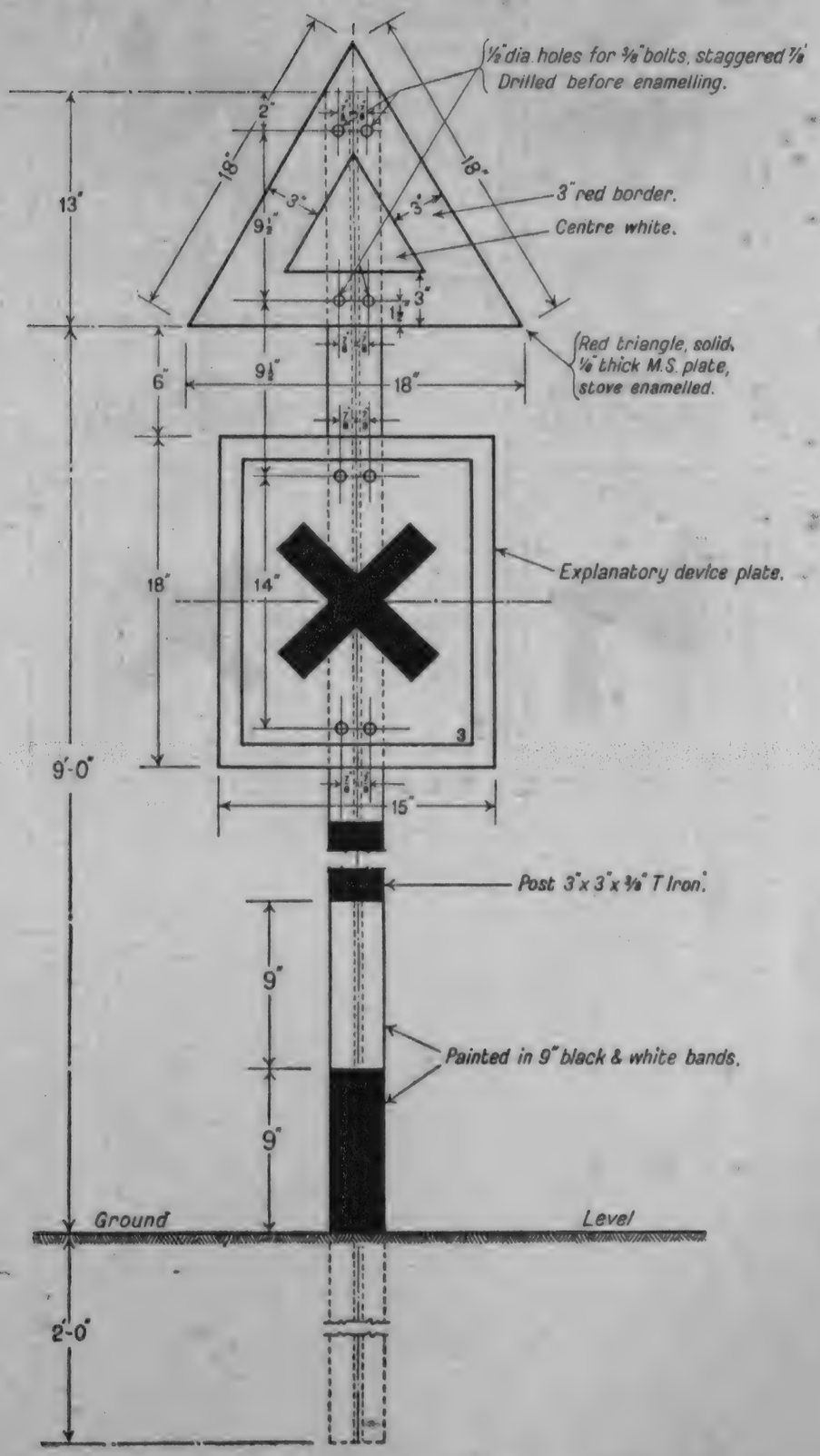

NO. 1
ROUGH ROAD

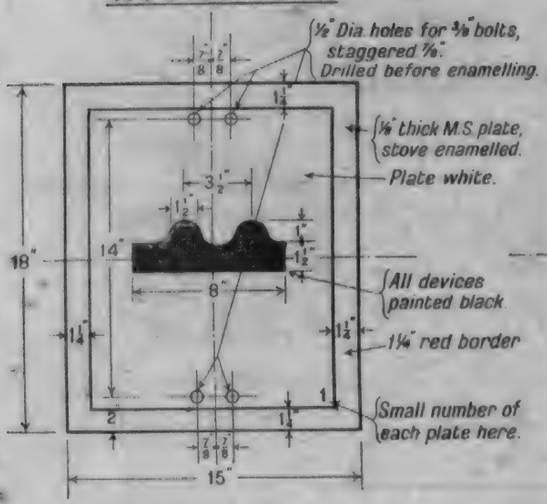

NO. 2
ZIG-ZAG (RIGHT)

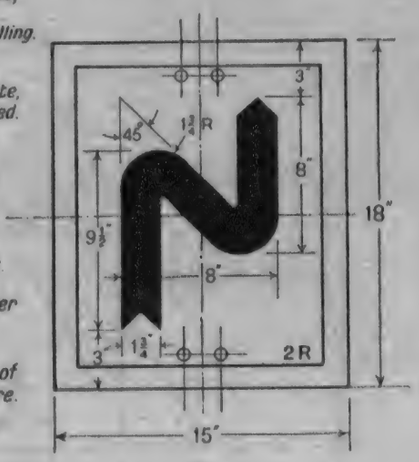

NO. 2
ZIG-ZAG (LEFT)

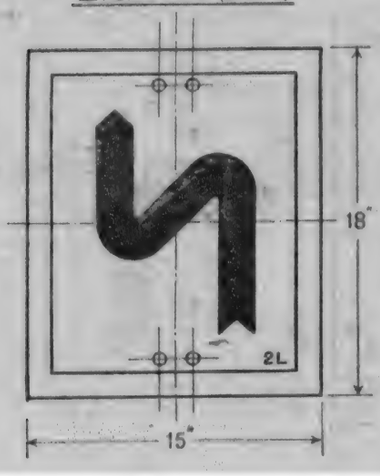

NO. 3
CROSS ROADS

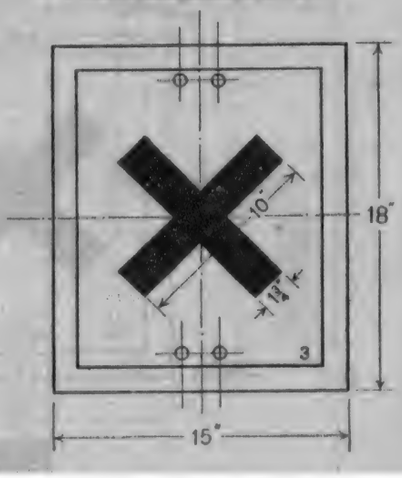

NO. 4
LEVEL CROSSING
(GUARDED)

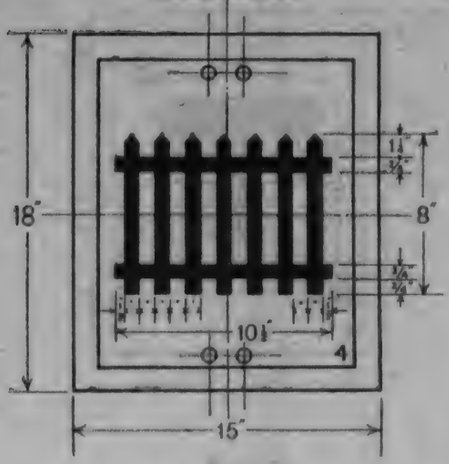

NO. 5
LEVEL CROSSING
(UNGUARDED)

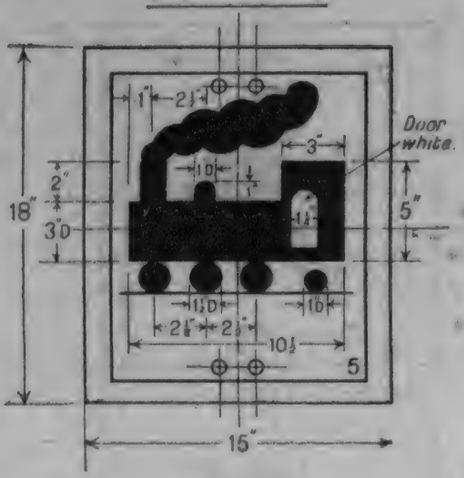

NO. 6 (RIGHT)
RIGHT TURN

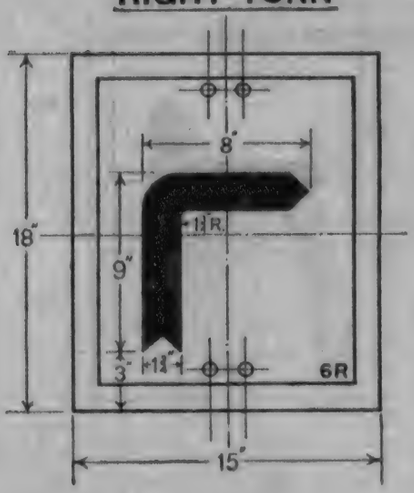

NO. 6 (LEFT)
LEFT TURN

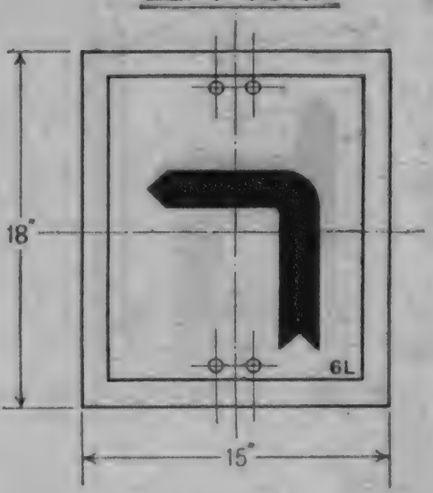

NO. 7
SCHOOL

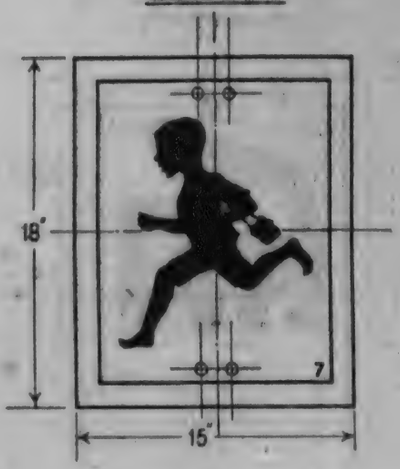

NO. 8
DEAD END CROSS ROAD

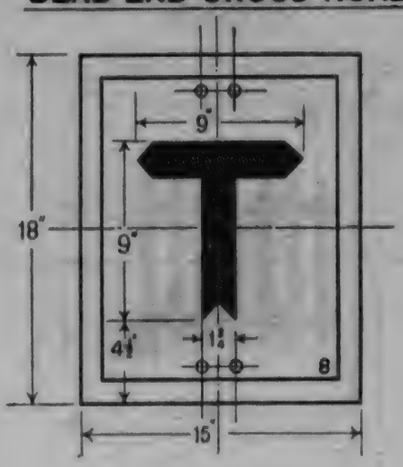

NO. 9
SIDE ROAD (RIGHT)

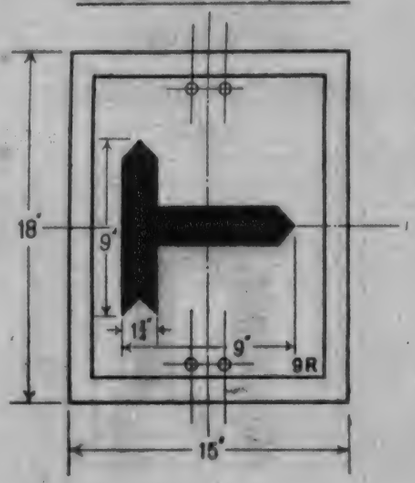

NO. 9
SIDE ROAD (LEFT)

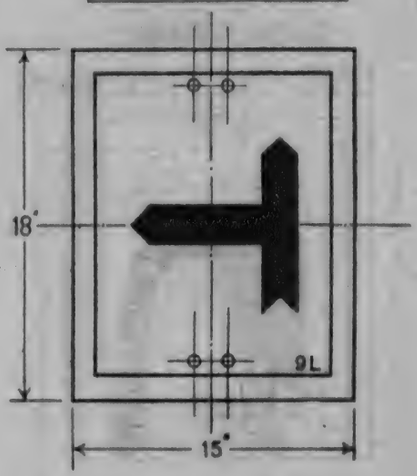

NO. 10
STEEP HILL

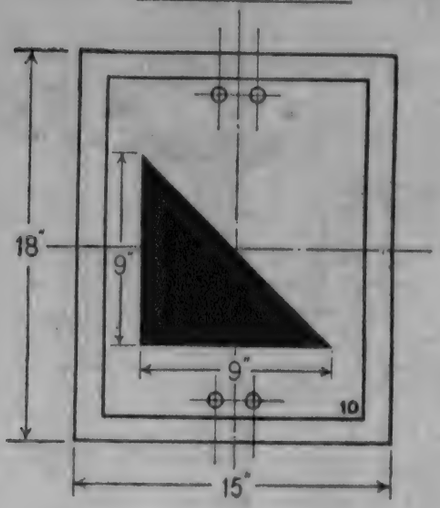

NO. 11
FERRY

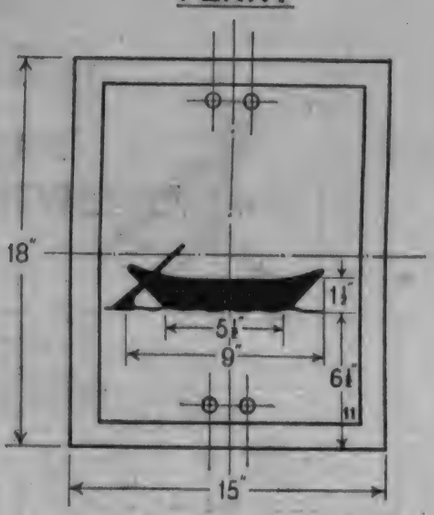

NO. 12
HAIR PIN BEND (RIGHT)

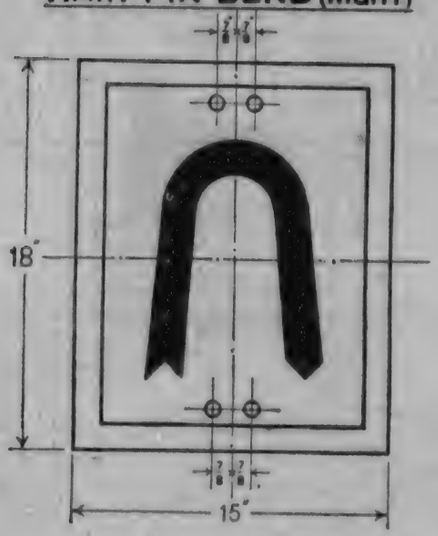

NO. 13
HAIR PIN BEND (LEFT)

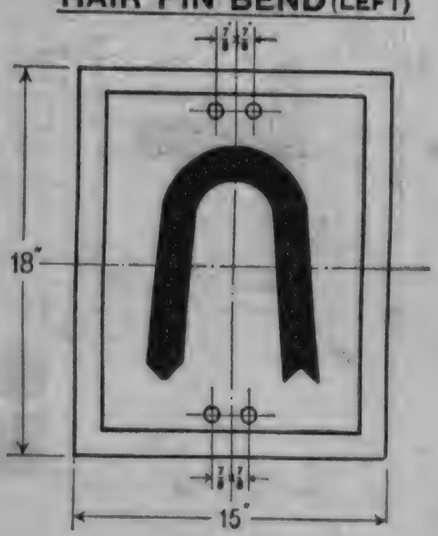

Appendix B.

PART II.

PROHIBITORY SIGNS.

NO. 1

PROHIBITORY SIGN

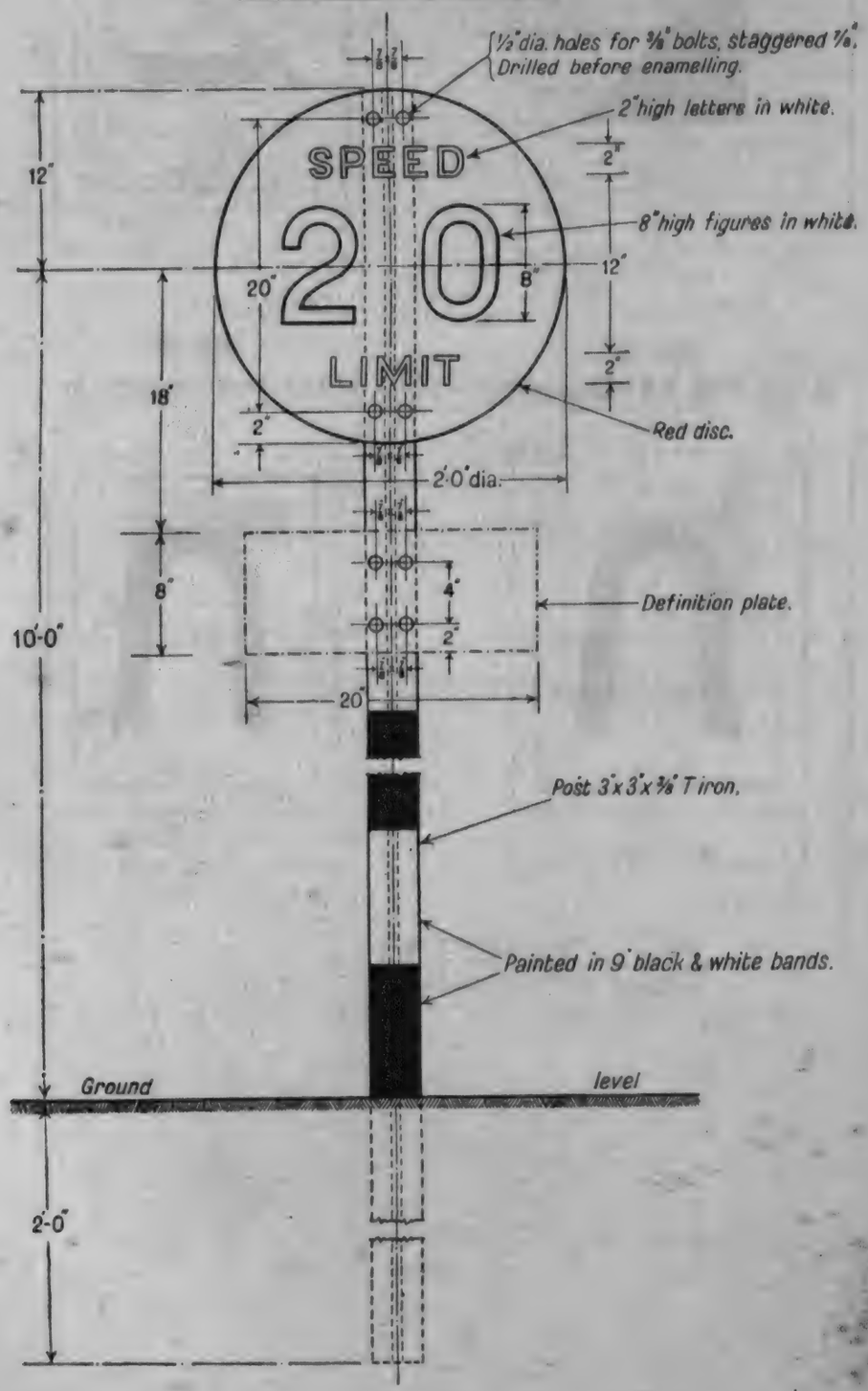

NO. 2

PROHIBITORY SIGN

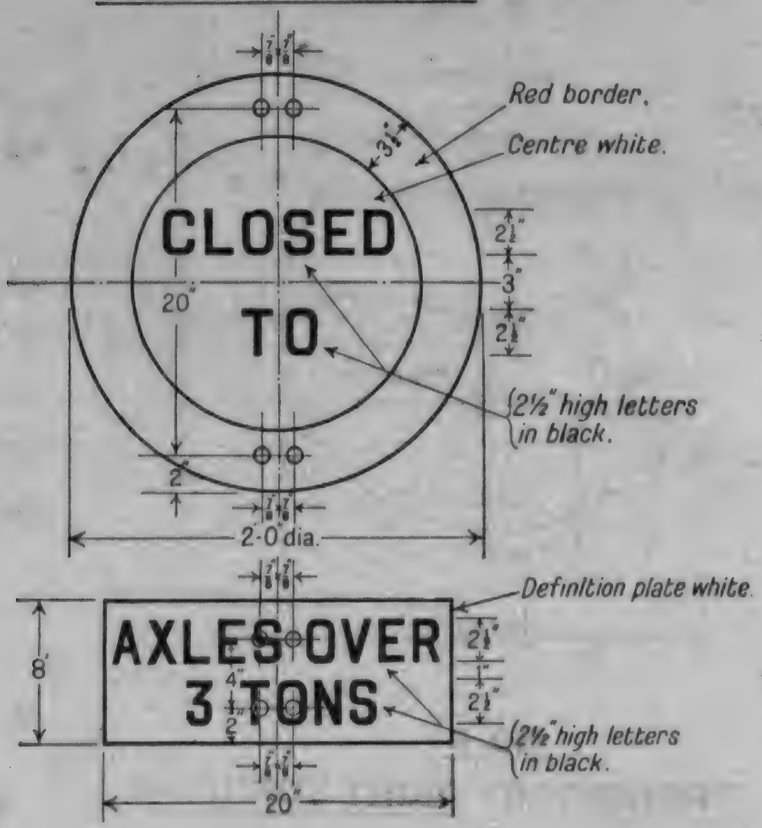

NO. 3

TOTAL PROHIBITORY SIGN

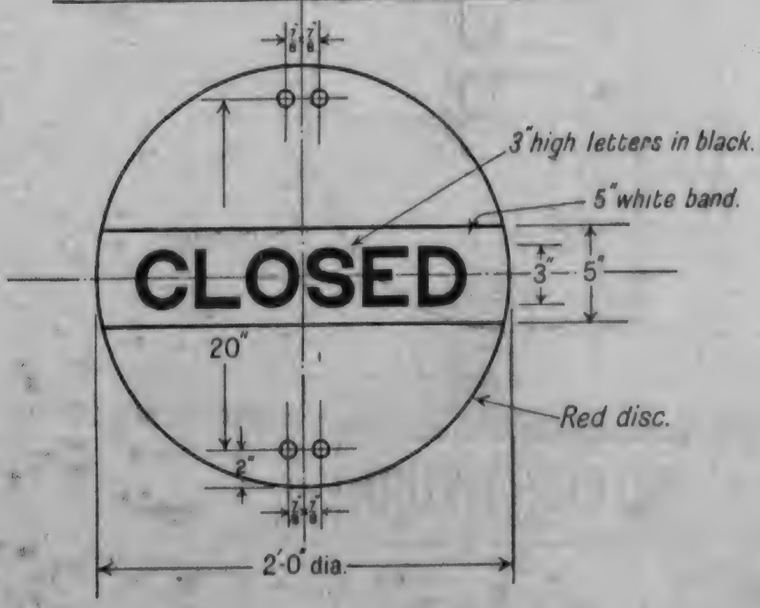

NO. 4
DIRECTION SIGN

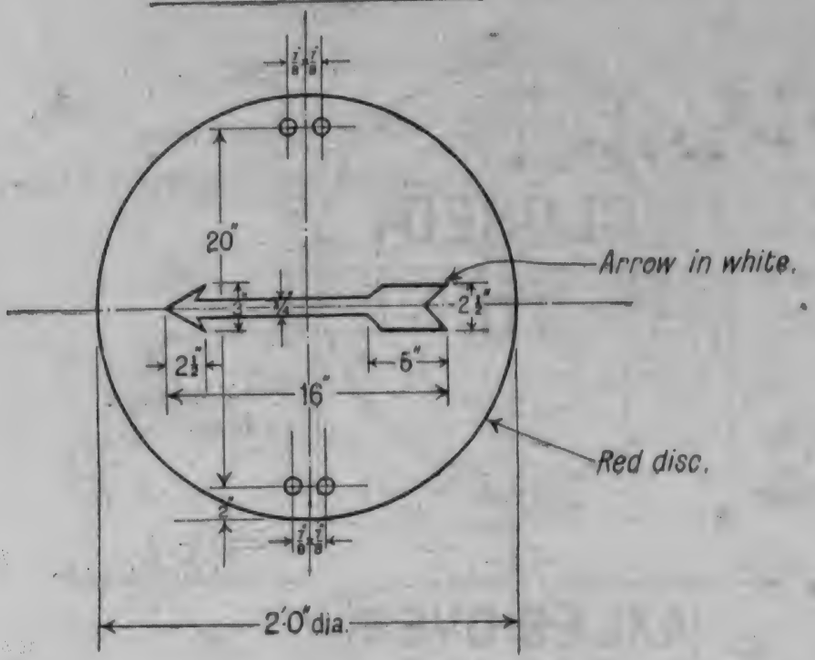

NO. 5
PROHIBITORY RIGHT TURN

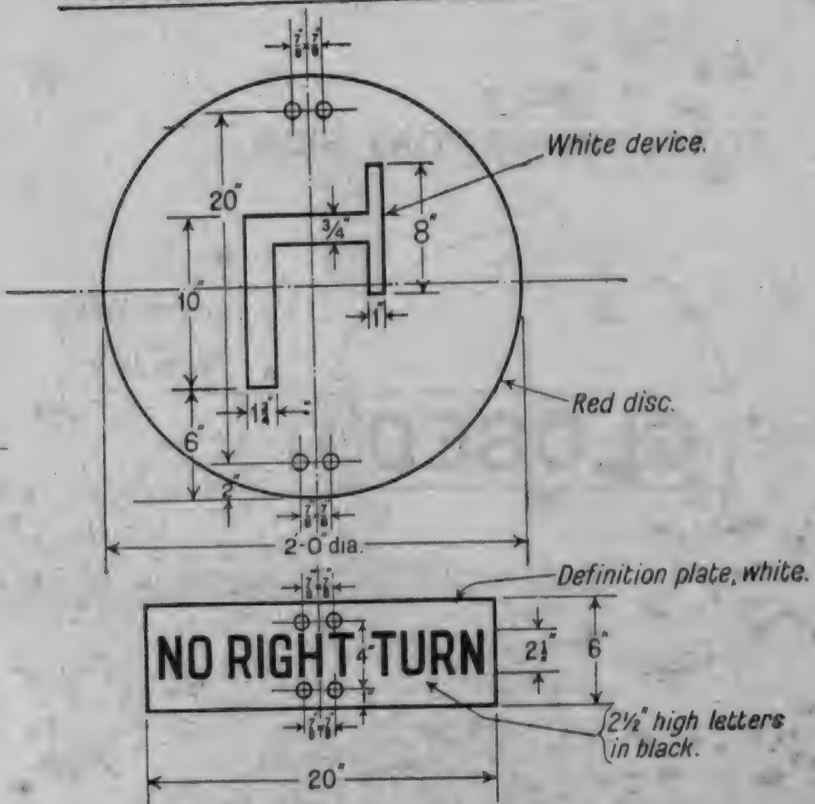

NO. 6

NO PARKING SIGN

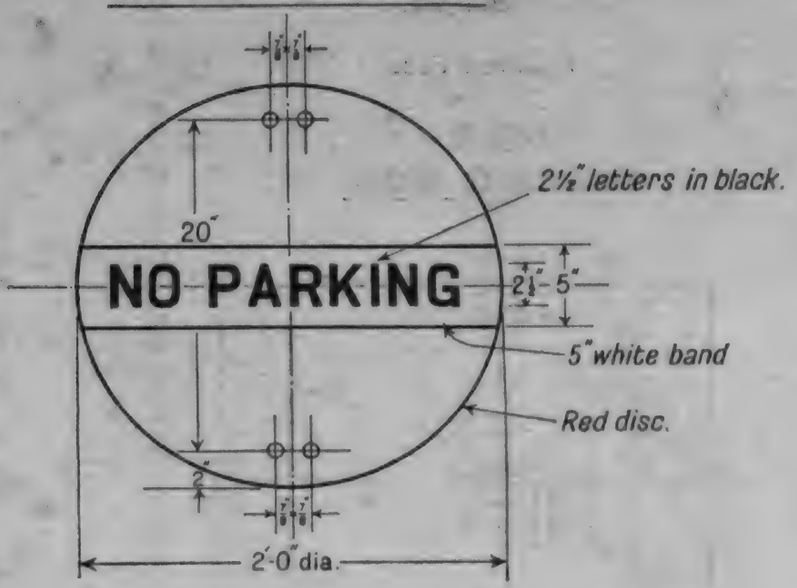

Appendix B.

PART III.

PARKING SIGN.

NO. 7

PARKING SIGN

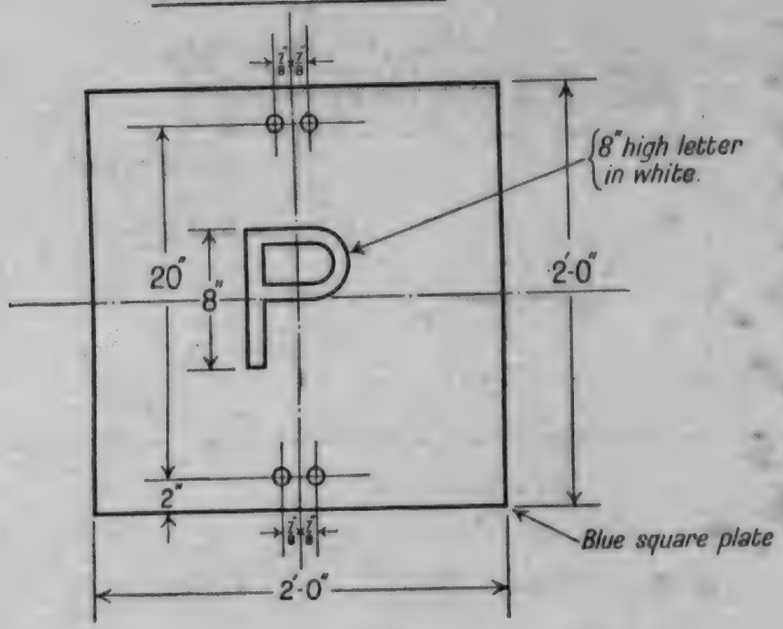

Appendix C.

[*See* rule 207.]

An applicant for a licence to drive a motor omnibus or lorry in the district of Darjeeling exclusive of the Siliguri subdivision shall—

(*i*) drive an omnibus or lorry with a full load on stiff hills and over crossings, and round corners and bends, to the satisfaction of the Deputy Commissioner, Darjeeling, for such distance as the Deputy Commissioner may consider fit;

(*ii*) turn an omnibus or lorry with a full load on railway lines and on a narrow road to the satisfaction of the Deputy Commissioner;

(*iii*) drive an omnibus or lorry in reverse for such distance as the Deputy Commissioner may consider fit;

(*iv*) satisfy the Deputy Commissioner that he has an adequate knowledge of running repairs, police traffic and driving signals and the rules governing the use of motor vehicles.

Form A.

[*See* rule 4 (*1*).]

Registered number.	When and where made, maker's name and type.	Description.								Axle-weights.	
		Engine No.	Chassis No.	Magneto No.	Cylinders.	Horse power.	Seats.	Type of body.	Colour.	Laden.	Unladen.

.....motor.....

Name and address of registered owner.	Date of registration or renewal.	Date of expiry.	Fees.				Duplicate issued on.	Initials.	Remarks.
			Amount in—		Receipt No.	Date.			
			Cash.	Non-judicial stamp.					

Form B.

[*See* rule 4 (*2*).]

Application for the registration of a light motor car, motor cycle, or motor cab, under the Indian Motor Vehicles Act, VIII of 1914, and the rules made thereunder.

Registered number, if any :—

1. When and where made, maker's name and type. 2. Date of manufacture or of import.	Description.	Colour.	Power of lights.	No. and type of meter.	Width of springs.	Overall measurement.	Turning space.	Seats. Width of	Seats. Width between.	Width of doorway.	Width of tyre.
1	2	3	4	5	6	7	8	9		10	11
	Engine No.										
	Chassis No.		Head								
	Magneto No.				Back	Length					
	No. of cylinders										
	R.A.C. Horse-power		Side								
	No. of seats				Front	Width					
	Type of body										

Columns 5 to 10 to be filled in for motor cabs.

I hereby declare that the particulars given herein are correct, and apply for a certificate of registration for the above _____ (light motor car, motor cycle or _____ motor cab to be entered above) for use as a _____ (Note whether private or public conveyance.) The statement of intended route(s) is/are herewith attached.

The required fee, Rs. ....., is presented herewith.

Owner's name in full .....

Garage address .....

.....

Local address .....

..... *Signature of owner.*

Dated the....day of.....19

N.B.—The light motor car, motor cycle, motor cab, must be presented for examination in a thoroughly efficient condition, constructed and fitted according to the full requirements of the rules, before a number will be allotted. The registration certificate will not be issued until the number plate has been properly affixed and passed.

Report whether applicant is a fit and proper person to be owner or possessor of a motor cab, and whether he maintains a suitable garage.

Dated the.....day of.....19

Signature and designation of police officer.

Certified that Rs.....is due.

Dated the.....day of.....19 .

Examining Clerk.

The fee, Rs.....mentioned above, has been duly credited, *vide* Receipt No....., dated the.....day of.....19

Cashier.

---

1. Engine .....
2. Brakes .....
3. Steering gear .....
4. Horn .....
5. Wheels .....
6. Inside measurements.....
7. Cushions and covers .....
8. Hood and side screens .....
9. Fire extinguisher .....
10. Luggage platform .....
11. Marking and paint.....
12. Clearance.....

To carry.....passengers.

I have inspected the above light motor car, motor cycle, motor cab, and found it to comply with the rules.

No.....allotted has been properly affixed.

District Magistrate.

Dated the.....day of.....19 *Examining Officer.*

Issue certificate.

Dy. Commissioner of Police,
Public Vehicles Department.

Dated the.....day of.....19 *District Magistrate.*

Certificate No.....to expire on the.....day of.....19 has been issued to-day.

Station.....

Registration Clerk,
Motor Vehicles Branch.

Dated the.....day of.....19

Form C.

[*See* rule 6 (*1*).]

Registration certificate for a motor vehicle.

Registered No. District.

Make. No. of cylinders.

Engine No. Horse power.

Chassis No. No. of seats.

Colour.

Unladen weight (lorries only).

Granted to .....

of .....

Garage address.....

subject to the rules made by the Government of Bengal, under section 11 of the Indian Motor Vehicles Act, VIII of 1914. Shall remain in force only until the day of 19 , until suspended or cancelled, when it shall be surrendered to the $\frac{\text{Commissioner}}{\text{District Magistrate}}$, or until change of ownership, when it shall be delivered endorsed to the transferee for renewal.

Regn. Clerk.

Dated

Dy. Commr. of Police.
District Magistrate.

Any transfer of possession to be entered and notified.

To be renewed before expiry, and on change of ownership or classification.

Renewed on	Expires on	Signature.

Every change of address to be entered and notified.

Form D.

[*See* rule 7 (*1*) (*b*).]

Application for renewal of registration of a motor vehicle.

(Note Make) motor (and class)
Registered No.
Engine No. Chassis No.
No. and type of taxi-meter
(If annual) date of expiry of registration
(If change of ownership) from whom purchased
Name in full
Address

I hereby declare that the registration has not been suspended or cancelled. The certificate is presented with the required fee, Rs.

Name in full
Garage address
Local address

Dated the.....day of.....19 *Signature of owner or transferee.*

Every vehicle must be produced for inspection on change of ownership.

Certified that Rs. is due.

Dated the.....day of.....19 *Examining Clerk.*

The fee, Rs. mentioned above, has been duly credited, *vide* Receipt No....., dated the.....day of.....19

Cashier.

I have inspected the above motor vehicle and found it fit for use.

Dated the.....day of.....19 *District Magistrate.* / *Examining Officer.*

Registration renewed until the day of 19

Station.....
Dated the.....day of.....19 *Registration Clerk, Motor Vehicles Branch.*

Certificate to accompany application for the registration or renewal of the registration of a heavy motor car.

I hereby declare that the materials of which all the parts of the said vehicle are constructed are good, that the machinery is safe, and that the vehicle is in every way fit for use as motor lorry/omnibus.

Dated the.....day of.....19 *Signature of Importer.*

In the case of each motor omnibus, the routes and stopping places by which and the hours between which the owner intends to use the vehicle must be noted below :—

Time—from to

Place—from to

(ROUTE.)	(STOPPING PLACES.)
by	

Form E.

[*See* rule 22 (*a*).]

Application for a private licence to drive a light motor car or motor cycle under the Indian Motor Vehicles Act (VIII of 1914).

I hereby declare that the particulars given herein are correct and apply for a licence to drive a (light motor car or motor cycle to be entered).

My age is over 18 years. I have never been disqualified for holding a licence to drive a motor car or cycle.

Particulars of any previous licence.....

The required fee, Rs.....is presented herewith.

Name in full.....

Business address.....

Local address .....

Signature of applicant.

Dated the.....day of 19

Certified that Rs.....is due.

Dated the .....day of 19

Examining Clerk.

The fee, Rs.....mentioned above, has been duly credited, *vide* Receipt No....., dated the.....day of 19

Cashier.

I have tested the applicant and found him/her fit to drive a light motor car/motor cycle.

Dated the.....day of.....19

District Magistrate.
Examining Officer.

Issue licence.

Dated the.....day of.....19

Deputy Commissioner of Police, Public Vehicles Department.
District Magistrate.

Licence No.....has been issued to-day.

Station.....

Dated the.....day of..... 19

Licence Clerk,
Motor Vehicles Branch.

Form F.

[*See* rules 22(*b*), 23(*I*) and 110(*b*).]

Application for a $\frac{\text{professional licence to drive}}{\text{licence to act as conductor of}}$ **a motor vehicle under the Indian Motor Vehicles Act, VIII of 1914, and the rules made thereunder.**

The applicant is warned that all particulars given shall be true and that any misrepresentation renders him liable to a penalty.

1. Name in full.
2. Father's name.
3. Caste or religion.
4. Home address—Village Post-office
   Police-station District
5. Local address.
6. How long have you resided in $\frac{\text{this district ?}}{\text{Calcutta or Howrah?}}$
7. Have you anywhere previously held a motor-driving/conductor's licence ? If so, give particulars of the licence and any punishments.
8. Have you at any time been disqualified for obtaining such a licence ? If so, note by whom, why and for how long disqualified.
9. Have you ever been dismissed from any employment ? If so, state from what, when and why dismissed ?
10. Have you ever been suspected in, charged with or convicted of any offence ? If so, give the time, place and nature of the offence.

I hereby declare that I have given true particulars herein and apply for a licence to drive a (state light motor car, taxi cab or heavy motor car).

conductor's licence.

The required fee, Rs. is presented with two copies of my photo.

Left thumb impression. *Signature of the applicant.*

No. *Date*

Forwarded in original to the Superintendent of Police for favour of verification of antecedents and the above particulars and early return. A brief report, *signed by the Officer-in-charge of the police-station* and *bearing the police-station seal*, should be endorsed above.

Deputy Commissioner of Police,
Public Vehicles Department.

District Magistrate

Station.....

Dated the day of 19

Certified that Rs. is due.
Dated the *day of* *19*
Examining Clerk.

The fee, Rs. mentioned above, has been duly credited, *vide* Receipt No. dated the day of 19
Cashier.

Failed or passed on a and in Mechanism, Motor and Traffic Rules.
Dated the *day of 19*
District Magistrate.
Examining Officer.

Failed or passed in knowledge of Calcutta and Howrah, of taxi-meter / the locality and rates for hire.
Dated the *day of* *19* *Examining Officer.*

Check and issue licence.
Dated the *day of* *19*
Dy. Commr. of Police.
District Magistrate.

Application in order. Licence No. issued to-day.
Dated the *day of* *19*
Licence Clerk,
Motor Vehicles Branch.

Applicant to affix a copy of his photo here.
Medical officer / practitioner to stamp or sign across it.

Medical Examination.

Special attention should be directed to distant vision, to the condition of the arms, hands and joints of the upper extremities.

1. What do you estimate to be his age ?
2. Is the applicant, to the best of your judgment, subject to epilepsy, vertigo or any mental ailment, likely to affect his efficiency ?
3. Does the applicant suffer from any heart or lung disorder which might interfere with the performance of his duties as a driver/conductor ?
4. (*a*) Is there any defect of vision ? If so, has it been corrected by suitable spectacles ?
   (*b*) Does the applicant suffer from night blindness ?
   (*c*) Is there any defect of hearing ?
5. Has the applicant any deformity or loss of members which would interfere with the efficient performance of his duties as a driver/conductor ?
6. Is he sufficiently active for the performance of his duties ?
7. Does he show any evidence of being addicted to the excessive use of alcohol, tobacco or drugs ?
8. Is he in your opinion generally fit as regards (*a*) bodily health, (*b*) temperament for the duties of a motor vehicle driver/conductor ?

Marks of identification to be noted below by the Medical Practitioner.

Certified that I have examined the applicant described herein and that the answers to the questions above are correct to the best of my knowledge and belief.
Name of Medical Practitioner— *Signature of Medical Officer. / Practitioner.*
Address *Dated the* *day of* *19*

Form G.

[*See* rule 24 (*1*) (*b*).]

Private Licence to drive a light motor car or motor cycle No....., District.....

Not transferable.

Granted to.....
of .....
subject to the rules made by the Government of Bengal under section 11 of the Indian Motor Vehicles Act, VIII of 1914. Shall remain in force only until the.....day of.....19 , until suspended or cancelled when it shall be surrendered to the undersigned.

Date *Dy. Commissioner of Police.*

Licence Clerk. *District Magistrate.*

TO BE PRESENTED WITH RENEWAL FEE BEFORE EXPIRY.

Renewed on	Expires on	Signature.

Signature of licensee.

EVERY CHANGE OF ADDRESS TO BE ENTERED AND NOTIFIED.

Punishment.	Section or Rule.	Magistrate and date.

Form H.

[*See* rule 24 (*1*) (*c*).]

Page 2.

Name of holder .....

Address .....

Copy of Holder's Photograph. Left thumb impression.

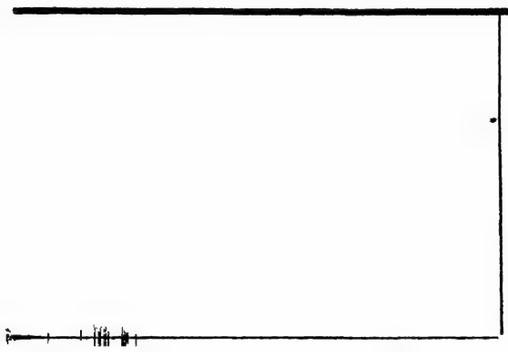

Description of Holder.

Page 3.

District .....

Licence No. .....

Licence to drive a car of the class or classes* specified on page 4 is hereby granted under sections 6 and 11 of the Indian Motor Vehicles Act, 1914, to the holder.

Licence expires on the .....

Licence not transferable. Licence fee Rs. 10 (ten) only. Renewal fee Rs. 4 if renewal is effected on or before the date of expiry. If effected after date of expiry full fee Rs. 10 will be charged.

Personal attendance is essential at the time of renewal.

Every change of address must be entered in the licence which must be produced at the office of the Licensing Authority for entry.

Clerk.

Date.....

Seal Licensing Officer.

Licensing Officer.

*For areas outside Calcutta (including suburbs) and the Municipality of Howrah the classes of vehicles are specified in rule 28(3).

Page 4.

Classes of vehicles which the holder is licensed to drive.

	Signature of licensing Officer.

Pages 5 and 6.

Renewals.

Renewed on—	Expires on—	Stamp.	Signature.

Page 7.

Every change of address to be entered.

[To be produced to the Licensing Officer in order that new address may be endorsed.]

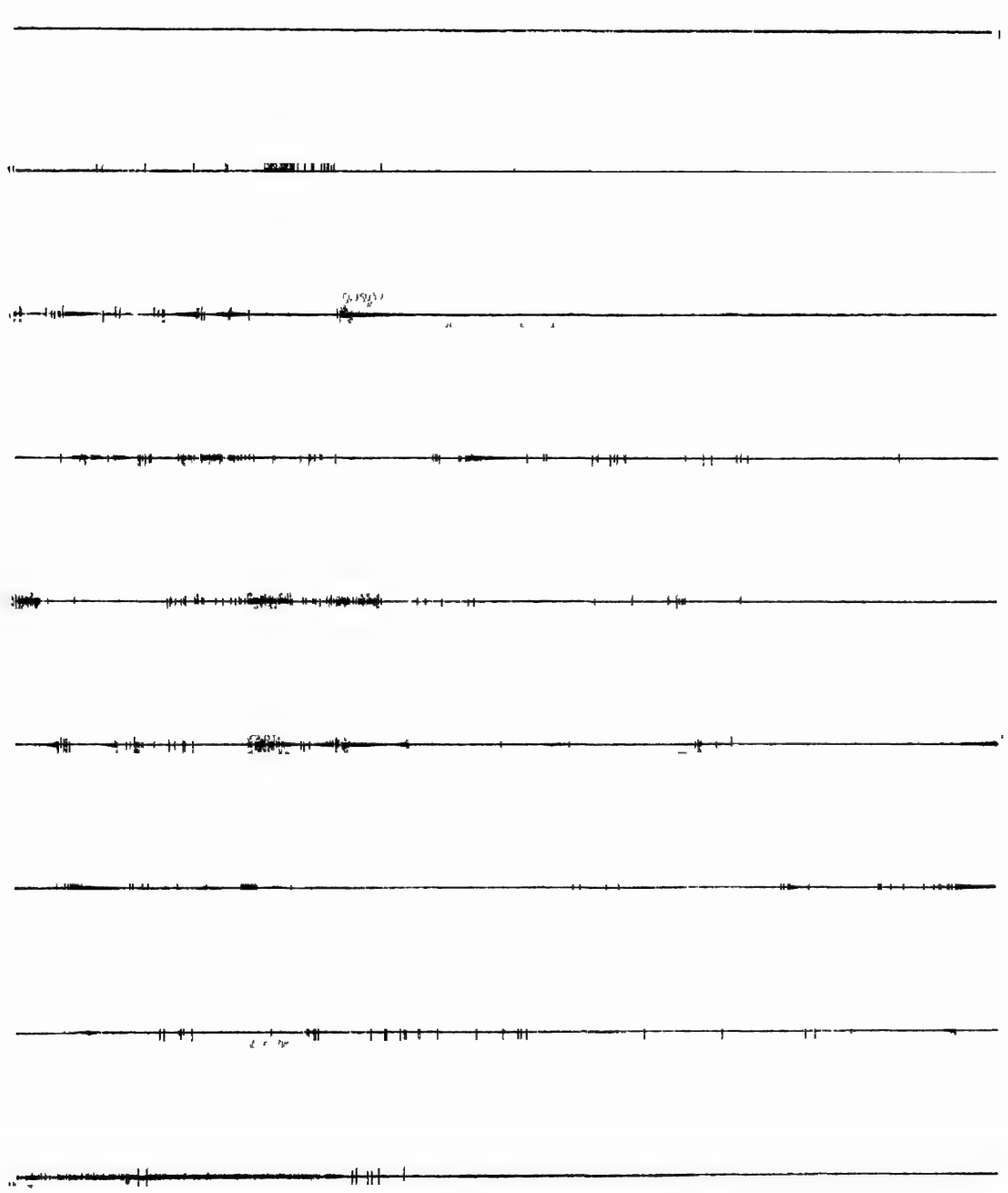

Pages 8 and 9.

Endorsements by Magistrate or Licensing Officer.

Punishment.	Section or Rule with brief statement of offence.	Magistrate or Licensing Officer and date of punishment.

Page 10.

Particulars of any endorsements of any licence previously held by the person licensed.

Form I.

[*See* rule 54 (*1*)(*a*).]

Register of heavy motor car.

No. Previous number, if any :—

When and where made, maker's name and type. Date of import.	Description.	Colour.	Unladen and axle weights, and type of tyres fitted.	Name of registered owner.
	Engine No. .. .. Chassis No. .. .. Magneto No. .. .. No. of cylinders .. .. Horse-power .. .. No. of seats .. .. Type of body			

.....motor.....

Address.	Date of registration or renewal.	Date of expiry.	Fees.				Duplicate issued on—	Initials.	Remarks.
			Amount in—		Receipt No.	Date.			
			Cash.	Non-judicial stamps.					

Form J.

[*See* rule 54(*1*)(*b*).]

Application for the registration of a heavy motor car, motor lorry or motor bus under the Indian Motor Vehicles Act, VIII of 1914, and the Rules made thereunder.

Registered number, if any :—

When and where made, maker's name and type. Date of manufacture or of import.	Description.	Colour.	Power of lights.	Width of spring.	Overall measurement.	Weight when unladen.	Axle-weight of each axle.	Wheels.			Tyres.		Seats.		Width of gangway.	Width of tyre.
								Diameter.	Base.	Track.	Width.	Material.	Width of.	Width between.		
1	2	3	4	5	6	7	8	9			10		11		12	13
	Engine No.		Head	Back	Length	Back	Inter Back	Back			Back	Back				
	Chassis No.															
	Magneto No.															
	No. of cylinders															
	R. A. C. horse-power.															
	No. of seats		Side	Front	Width	Front	Front	Front			Front	Front				
	Type of body															

COLUMNS 11 AND 12 TO BE FILLED IN FOR MOTOR BUS.

I hereby declare that the particulars given herein are correct, and apply for a certificate of registration for the above.

(heavy motor car, motor lorry or motor-bus to be entered above) for use. (Note whether for trade purposes or as a public conveyance.)

The importer's certificate and the statement of intended routes are attached.

The required fee, Rs....., is presented herewith.

Owner's name in full.....

Garage address.....

Local addresses.....

Signature of owner.

Dated the.....day of.....19 .

N.B.—The heavy motor car, motor lorry, motor bus, must be presented for examination in a thoroughly efficient condition, constructed and fitted according to the full requirements of the rules, before a number will be allotted.

The Registration certificate will not be issued until the number-plate has been properly affixed and passed.

"Axle-weight" means the aggregate weight transmitted to the surface of the road or other base whereon a heavy motor car or lorry moves or rests, by the several wheels attached to that axle, when the heavy motor car or lorry is laden.

The expression "weight" when used in relation to a heavy motor car or motor lorry means :—

"(*a*) When it is unladen the weight of the vehicle, including all parts, equipments, stores, fuel, water and accumulators which are necessary for or are ordinarily used with the lorry or motor car when working provided that where alternative parts or bodies are used the heaviest shall be taken for the purpose of calculating the weight, and

(*b*) When the lorry or heavy motor car is laden, its weight when unladen plus its full lawful load, including the weight of driver and attendant."

Certified that Rs.....is due.

Dated the.....day of.....19 .

Examining Clerk.

The fee, Rs.....mentioned above, has been duly credited, *vide* Receipt No.....dated the.....day of.....19 .

Cashier.

1. Engine .....
2. Brakes .....
3. Steering gear .....
4. Horn and bell .....
5. Wheels .....
6. Height inside and outside .....
7. Hand rails .....
8. Lifeguard .....
9. Fire extinguisher.....
10. Platform and steps.....
11. Marking and paint.....
12. Clearance.....

To carry.....passengers.

I have inspected the above heavy motor car, motor lorry, motor bus, and found it to comply with the rules.

No.....allotted has been properly affixed.

Dated the.....day of.....19 .

District Magistrate.
Examining Officer.

Issue certificate.

Dy. Commissioner of Police,
Public Vehicles Department.
District Magistrate.

Dated the.....day of.....19 .

Certificate No.....to expire on the.....day of.....19 has been issued to-day.

Registration Clerk,
Motor Vehicles Branch.

Station.....

Dated the.....day of.....19 .

Form K.

[*See* rules 3(*a*) and 83(*a*).]

Application for a Licence for a Public Service Vehicle.

.....District.

I/We.....

residing at.....

in the police-station of.....

hereby apply for permission to ply (1) a $\frac{\text{motor}}{\text{taxi}}$ cab under the rules regulating the use of motor-vehicles $\frac{\text{in}}{\text{in Calcutta (including suburbs) and the Municipality of Howrah}}$ [for places other than Calcutta (including suburbs) and the Municipality of Howrah], (2) to ply an omnibus of the following description from.....

.....in police-station .....

to.....in police-station .....

.....

(1) Strike out in case of buses.
(2) Strike out in case of taxis.

Description of vehicle.

Maker's name and year.	Horse-power and weight.	No. of seats.	Type of body.

A time table of the proposed service is attached herewith.

The vehicle will be garaged at.....

.....

I am the owner/part owner of the undermentioned public service vehicles in British India.....

.....

.....

My age is.....

I am the holder of the following driving licences in British India.....

.....

.....

Names and addresses of two referees who will certify as to applicant's fitness to own a public service vehicle.

(1) .....

.....

(2) .....

.....

Time Table of proposed service.

From	Time of departure.	To	Time of arrival.

I hereby declare that the particulars given above are true. I have never been refused permission to ply a public service vehicle. I further declare that I have never had my driving licence cancelled nor has any previous permission of mine to ply a public service vehicle been cancelled.

Dated

Signature of applicant.....

Address.....

Forwarded in original to Officer-in-charge.....

.....for

verification of the above.

(1) How long have referees known applicant ?

Are they related to applicant ?

Are they reliable ?

Are they engaged in business with applicant ?

(2) Is applicant of a good character ?

(3) Is applicant of good business repute and is his financial position such that he will be able to fully discharge his duties as an owner of a public service vehicle ?

(4) Is applicant otherwise in a position to carry out his responsibilities as licensee of a public service vehicle ?

Station.....

Dy. Commissioner of Police,
Public Vehicles Department.

Dated *District Magistrate.*

Report of the thana officer.

Orders of — **District Magistrate.**
Deputy Commissioner, Public Vehicles Department.

OFFICE NOTE.

A vehicle as described above was produced and registered as No.....

on.....

District Magistrate.

Registration Clerk. *Examining Officer.*

Date..... *Date*.....

Form L.

Licence for a Public Service Vehicle (Rule 81, Bengal Motor Vehicles Rules) and Tax Token (Bengal Act I of 1932) to ply Taxi/Bus-
Registered No.....

	Token No.	Tax Expires.	Taxing Officer.
Route			
No. of Seats			
Chassis No.			

This Licence remains in force until..... unless suspended or revoked, or until the Vehicle ceases to be the property of the Licensee, in which case it must be surrendered to the undersigned.

Taxing Officer and
District Magistrate.

Station.....

Dated.....*193*

[Front view.]

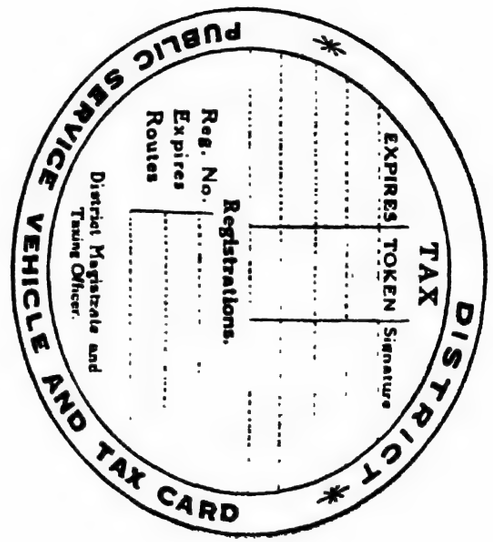

LICENCE CARD

FOR

PUBLIC SERVICE VEHICLE

AND

TAX TOKEN.

THIS PART TO BE KEPT IN THE CUSTODY OF THE DISTRICT MAGISTRATE.

This part to be exhibited in the approved manner on the vehicle.

Motor Vehicles Department.

Station.....

[Reverse.]

Form M.

[*See* rule 110(*a*).]

Application for Re-test.

Name in full.....

Local residence.....

Note class of licence wanted.....

Previous licence No.....for a.....

The required fee, Rs.....is presented herewith.

Dated the.....day of.....19 *Signature of Licensee.*

N.B.—Previous licence must be produced with this form for endorsement.

Certified that Rs.....is due.

Dated the..... day of 19

Examining Clerk.

The fee, Rs.....mentioned above, has been duly credited, *vide* Receipt No....., dated the.....19

Cashier.

Passed/failed in Topography test of (places concerned) on.... Calcutta and suburbs on.....

day of.....19

District Magistrate.
Inspector, M. V. D.

Failed or passed in knowledge, on a.....

District Magistrate.
Examining Officer.

Dated the....., day of.....19

Noted and endorsed.

Licence Clerk,
Motor Vehicles Branch.

Station.....

Dated the.....day of.....19

Form N.

[*See* rule 112.]

Conductor's Licence No.....District.....

Not transferable.

Granted to .....

of .....

to act as a Conductor of a motor omnibus.

Photo.	Identification marks :—

Subject to the rules made by the Government of Bengal under section 11 of the Indian Motor Vehicles Act, VIII of 1914. Shall remain in force until the day 19 , until suspended or cancelled, when it shall be surrendered to the undersigned. Shall become void, if altered or defaced in any way.

Licence Clerk.

Dy. Commr. of Police,
Public Vehicles Department.
District Magistrate.

Dated.....19

To be presented with renewal fee before expiry by Licensee in person.

Renewed on	Expires on	Signature.

Every change of address to be entered and notified.

Punishment.	Section or rule.	Magistrate and date.

Bengal Board of Censors.

NOTIFICATION.

No. 1-C.B.—22nd January 1935.—It is hereby notified for general information that the Bengal Board of Censors have refused to certify the synchronised versions of the following films as suitable for public exhibition in the Bengal Presidency on account of their low moral tone:—

(1) The Convention City—First National—6,356 feet.

(2) Fury of the Jungle—Columbia Films—6,454 feet.

R. HIGGINS,

Secy., Bengal Board of Censors.

POLITICAL DEPARTMENT.

Political.

NOTIFICATION.

No. 787P.—25th January 1935.—In exercise of the power conferred by section 24 of the Bengal Suppression of Terrorist Outrages Act, 1932 (Ben. Act XII of 1932), the Governor in Council is pleased to invest Mr. S. K. Chatterjee, I.C.S., Subdivisional Magistrate, Jamalpur, Mymensingh, with the powers of a Special Magistrate under the said Act.

E. N. BLANDY,

Chief Secy. to the Govt. of Bengal (offg.).

Special.

NOTIFICATIONS.

No. 1924X.—31st January 1935.—Whereas in the opinion of the Government of Bengal there are reasonable grounds for believing that Babu Manindra Chandra Das Gupta, son of the late Babu Jasoda Kumar Das Gupta, of village Nawabpur, police-station Sonagazi, in the district of Noakhali, is a person in respect of whom an order may lawfully be made under sub-section (*1*) of section 2 of the Bengal Criminal Law Amendment Act, 1930; and

Whereas the Governor in Council on the 20th November 1934 in exercise of the powers conferred by the said section 2 was pleased to order the said Babu Manindra Chandra Das Gupta to be committed to custody in the nearest District or Central Jail, and the arrest without warrant of the said Babu Manindra Chandra Das Gupta at any place where he might be found by any police officer with a view to his commitment to custody; and

Whereas the said Babu Manindra Chandra Das Gupta has not been arrested and the said order under section 2 of the said Act has not been served personally on the said person, and whereas due diligence has in the opinion of the Local Government been exercised to effect such personal service;

Now, therefore, the Governor in Council in exercise of the powers conferred by sub-section (*2*) of section 3 of the Bengal Criminal Law Amendment Act, 1930, is pleased to direct the said Babu Manindra Chandra Das Gupta, son of the late Babu Jasoda Kumar Das Gupta, of village Nawabpur, police-station Sonagazi, in the district of Noakhali, to appear before the Superintendent of Police, Noakhali, at Noakhali, within 15 days of this date for the purpose of receiving the aforesaid order.

No 2078X.—31st January 1935.—Whereas in the opinion of the Government of Bengal there are reasonable grounds for believing that Babu Narendra Chandra Ghosh *alias* Nani, son of the late Babu Durga Das Ghosh, of Balubaria, in the district of Dinajpur, and of Kedarpur, police-station Nagarpur, in the district of Mymensingh, and also of Calcutta, is a person in respect of whom an order may lawfully be made under sub-section (*1*) of section 2 of the Bengal Criminal Law Amendment Act, 1930; and

Whereas the Governor in Council on the 10th November 1934 in exercise of the powers conferred by the said section 2 was pleased to order the said Babu Narendra Chandra Ghosh *alias* Nani to be committed to custody in the nearest District or Central Jail, and the arrest without warrant of the said Babu Narendra Chandra Ghosh *alias* Nani at any place where he might be found by any police officer with a view to his commitment to custody; and

Whereas the said Babu Narendra Chandra Ghosh *alias* Nani has not been arrested and the said order under section 2 of the said Act has not been served personally on the said person, and whereas due diligence has in the opinion of the Local Government been exercised to effect such personal service;

Now, therefore, the Governor in Council in exercise of the powers conferred by sub-section (*2*) of section 3 of the Bengal Criminal Law Amendment Act, 1930, is pleased to direct the said Babu Narendra Chandra Ghosh *alias* Nani, son of the late Babu Durga Das Ghosh, of Balubaria, in the district of Dinajpur, and of Kedarpur, police-station Nagarpur, in the district of Mymensingh, and also of Calcutta, to appear before the Superintendent of Police, Dinajpur, at Dinajpur, within 15 days of this date for the purpose of receiving the aforesaid order.

No. 2142X.—31st January 1935.—Whereas in the opinion of the Government of Bengal there are reasonable grounds for believing that Babu Sudhir Adhikari, son of the late Babu Chandra Kanta Adhikari, of village Balubari, police-station Kotwali, in the district of Dinajpur, is a person in respect of whom an order may lawfully be made under sub-section (*1*) of section 2 of the Bengal Criminal Law Amendment Act, 1930; and

Whereas the Governor in Council on the 22nd December 1934 in exercise of the powers conferred by the said section 2 was pleased to order the said Babu Sudhir Adhikari to be committed to custody in the nearest District or Central Jail, and the arrest without warrant of the said Babu Sudhir Adhikari at any place where he might be found by any police officer with a view to his commitment to custody; and

Whereas the said Babu Sudhir Adhikari has not been arrested and the said order under section 2 of the said Act has not been served personally on the said person, and whereas due diligence has in the opinion of the Local Government been exercised to effect such personal service;

Now, therefore, the Governor in Council in exercise of the powers conferred by sub-section (*2*) of section 3 of the Bengal Criminal Law Amendment Act, 1930, is pleased to direct the said Babu Sudhir Adhikari, son of the late Babu Chandra Kanta Adhikari, of village Balubari, police-station Kotwali, in the district of Dinajpur, to appear before the Superintendent of Police, Dinajpur, at Dinajpur, within 15 days of this date for the purpose of receiving the aforesaid order.

S. N. Roy,

Addl. Secy. to the Govt. of Bengal.

JUDICIAL DEPARTMENT.

Appointments and Transfers.

24-Parganas.—No. 432J. — 21st January 1935.—In exercise of the powers conferred by sections 14 and 15 of the Code of Criminal Procedure, 1898 (Act V of 1898), the Governor in Council is pleased—

(*a*) to confer upon Mr. J. M. Grant the powers of a Magistrate of the third class, in the district of the 24-Parganas, for a period of three years from the 22nd January 1935, and

(*b*) to direct him to sit as a member of the Titagarh bench in the said district.

Mymensingh.—No. 511J. — 25th January 1935.—In exercise of the powers conferred by sections 14 and 15 and the proviso to section 357 of the Code of Criminal Procedure, 1898 (Act V of 1898), the Governor in Council is pleased—

(*a*) to confer upon Babu Bihari Lal Chakrabatti the powers of a Magistrate of the third class, in the district of Mymensingh, for a period of three years from the 28th January 1935, in respect to such cases as may be made over to him within the limits of the Kishoreganj subdivision of the said district,

(*b*) to direct that he shall, in addition to sitting singly, sit as a member of the Bajitpur bench in the said district, and

(*c*) to direct him to take down evidence in the English language.

24-Parganas-Bankura.—No. 530J. — 26th January 1935.—Babu Santosh Kumar Ray, officiating munsif of Baruipur, in the district of the 24-Parganas, is appointed to act as a munsif in the district of Bankura, to be ordinarily stationed at Bishnupur, during the absence, on leave, of Babu Bhupendra Nath Mukharji, or until further orders.

Chittagong.—No. 532J. — 26th January 1935.—Babu Pushpita Ranjan Mukharji, of Patiya, in the district of Chittagong, is appointed to be a munsif in the said district, to be ordinarily stationed at Cox's Bazar.

Chittagong.—No. 534J. — 26th January 1935.—Maulvi Mahtabuddin Ahmad, munsif of Cox's Bazar, in the district of Chittagong, is appointed to be a munsif in the said district, to be ordinarily stationed at Patiya.

Bakarganj - Hooghly. — No. 604J.—26th January 1935.—Babu Thakur Das Banarji, Subordinate Judge of Bakarganj, is appointed to be Subordinate Judge of Hooghly.

Chittagong - Bakarganj.—No. 606J.—26th January 1935.—Babu Srish Chandra De, officiating Additional Subordinate Judge of Chittagong, is appointed to act, until further orders, as Subordinate Judge and Assistant Sessions Judge of Bakarganj.

Chittagong. — No. 608J. — 26th January 1935.—Babu Gobinda Chandra Chakrabatti, officiating Second Additional Subordinate Judge of Chittagong, is appointed to act, until further orders, as Additional Subordinate Judge of the said district.

Pabna - Bogra - Hooghly.—No. 610J.—26th January 1935.—Babu Kshitish Chandra Chatarji, officiating Subordinate Judge and Assistant Sessions Judge, Pabna, in the district of Pabna and Bogra, is appointed to act, until further orders, as Subordinate Judge and Assistant Sessions Judge, Howrah, in the district of Hooghly.

Bakarganj-Birbhum. — No. 612J. — 26th January 1935.—Babu Gyanada Sankar Gupta, munsif of Bhola, in the district of Bakarganj, is appointed to be a munsif in the district of Birbhum, to be ordinarily stationed at Suri.

Birbhum.—No. 614J.—26th January 1935. —The services of Babu Jogendra Nath Das Gupta, munsif of Suri, in the district of Birbhum, are placed at the disposal of the Government of Assam.

Midnapore.—No. 616J.—26th January 1935. —Babu Bilash Chandra Banik, munsif, is appointed to be a munsif in the district of Midnapore, to be ordinarily stationed at the Sadar station.

Midnapore-Jessore.—No. 619J.—26th January 1935.—Babu Upendra Narayan Mazumdar, munsif of Midnapore (Sadar), is appointed to be a munsif in the district of Jessore, to be ordinarily stationed at Magura but for the present to be employed at Jhenida.

Chittagong-Rangpur. — No. 621J. — 26th January 1935.—Babu Shib Chandra Datta, munsif of Patiya, in the district of Chittagong, is appointed to be a munsif in the district of Rangpur, to be ordinarily stationed at Kurigaon.

Midnapore-24-Parganas.—No. 623J. — 26th January 1935.—Babu Shailendra Nath Chatarji, munsif of Dantan, in the district of Midnapore, on leave, is appointed to be a munsif in the district of the 24-Parganas, to be ordinarily stationed at Sealdah.

Faridpur-Midnapore. — No. 625J. — 26th January 1935.—Babu Indu Bhusan Basu, additional munsif of Madaripur, in the district of Faridpur, is appointed to be a munsif in the district of Midnapore, to be ordinarily stationed at Dantan.

Mymensingh - Faridpur.—No. 627J.—26th January 1935.—Babu Matish Chandra Banarji, munsif of Netrakona, in the district of Mymensingh, is appointed to be a munsif in the district of Faridpur, to be ordinarily stationed at Chitaudi but for the present to be employed at Madaripur.

Bakarganj - Jessore. — No. 629J. — 26th January 1935.—Maulvi Abdul Awal, munsif of Patuakhali, in the district of Bakarganj, on leave, is appointed to be a munsif in the district of Jessore, to be ordinarily stationed at the Sadar station.

24-Parganas. — No. 631J. — 26th January 1935.—Babu Prasad Chandra Banarji, munsif, is appointed to be a munsif in the district of the 24-Parganas, to be ordinarily stationed at Sealdah.

Bakarganj - Birbhum. — No. 634J.—26th January 1935.—Babu Hari Charan Ghosh, munsif of Pirojpur, in the district of Bakarganj, is appointed to be a munsif in the district of Birbhum, to be ordinarily stationed at Rampurhat.

Birbhum - Chittagong. — No. 636J.—26th January 1935.—Babu Nages Chandra Chakrabatti, munsif of Rampurhat, in the district of Birbhum, on leave, is appointed to be a munsif in the district of Chittagong, to be ordinarily stationed at Satkania.

Chittagong - Hooghly. — No. 638J.—26th January 1935.—Maulvi Velayet Hossain Molla, munsif of Satkania, in the district of Chittagong, is appointed to be a munsif in the district of Hooghly, to be ordinarily stationed at Howrah.

Nadia. — No. 640J.—26th January 1935.— Babu Jyoti Prasad Banarji, munsif, is appointed to be a munsif in the district of Nadia, to be ordinarily stationed at Kushtia.

Chittagong - Rajshahi - Malda.—No. 643J. —26th January 1935.—Babu Amulya Kumar Bhattacharji, munsif of Chittagong (Sadar), is appointed to be a munsif in the district of Rajshahi and Malda, to be ordinarily stationed at Nator.

Faridpur - Khulna. — No. 645J. — 26th January 1935.—Babu Satyagopal Mukharji, munsif of Gopalganj, in the district of Faridpur, is appointed to be a munsif in the district of Khulna, to be ordinarily stationed at Bagerhat.

Tippera-Noakhali.—No. 647J.—26th January 1935.—Babu Kali Prasanna Piplai, munsif of Chandpur, in the district of Tippera, is appointed to be a munsif in the district of Noakhali, to be ordinarily stationed at Lakshmipur.

Mymensingh-Hooghly.—No. 649J. — 26th January 1935.—Babu Amulya Kumar Guha, munsif of Tangail, in the district of Mymensingh, is appointed to be a munsif in the district of Hooghly, to be ordinarily stationed at the Sadar station.

Dinajpur-Mymensingh. — No. 651J.—26th January 1935.—Babu Gyanendra Mohan Chatarji, munsif of Dinajpur (Sadar), is appointed to be a munsif in the district of Mymensingh, to be ordinarily stationed at Tangail.

Chittagong-Dinajpur. — No. 653J. — 26th January 1935. — Babu Basanta Bihari Mukharji, munsif of Patiya, in the district of Chittagong, is appointed to be a munsif in the district of Dinajpur, to be ordinarily stationed at the Sadar station.

Noakhali-24-Parganas. — No. 655J. — 26th January 1935.—Maulvi Enayetur Rahman, munsif of Sandwip, in the district of Noakhali, is appointed to be a munsif in the district of the 24-Parganas, to be ordinarily stationed at Baruipur.

Chittagong-Noakhali.—No. 657J. — 26th January 1935.—Babu Sudhir Chandra Datta, munsif of Chittagong (Sadar), is appointed to be a munsif in the district of Noakhali, to be ordinarily stationed at Sandwip.

Mymensingh-Chittagong. — No. 659J. — 26th January 1935.—Babu Abani Bhusan Gangali, munsif of Iswarganj, in the district of Mymensingh, is appointed to be a munsif in the district of Chittagong, to be ordinarily stationed at the Sadar station.

Chittagong-Dinajpur. — No. 661J. — 26th January 1935.—Maulvi Azizal Islam, munsif of Cox's Bazar, in the district of Chittagong, is appointed to be a munsif in the district of Dinajpur, to be ordinarily stationed at the Sadar station.

Dinajpur-Chittagong. — No. 663J. — 26th January 1935.—Maulvi Mahtabuddin Ahmad, munsif of Dinajpur (Sadar), is appointed to be a munsif in the district of Chittagong, to be ordinarily stationed at Cox's Bazar.

Pabna-Bogra-Mymensingh. — No. 665J. — 26th January 1935.—Maulvi M. Altaf Ahmed, munsif of Sirajganj, in the district of Pabna and Bogra, is appointed to be a munsif in the district of Mymensingh, to be ordinarily stationed at Kishoreganj.

Mymensingh-Rajshahi-Malda. — No. 667J. —26th January 1935.—Babu Jitendra Prasad Sen, munsif of Kishoreganj, in the district of Mymensingh, is appointed to be a munsif in the district of Rajshahi and Malda, to be ordinarily stationed at Naogaon.

Rangpur-Mymensingh. — No. 669J.—26th January 1935.—Babu Achintya Kumar Sen Gupta, officiating munsif of Kurigram, in the district of Rangpur, is appointed to act, until further orders, as a munsif in the district of Mymensingh, to be ordinarily stationed at Netrakona.

Nadia-Bakarganj. — No. 671J. — 26th January 1935.—Maulvi Syed Mokarram Hussain Chaudhuri, officiating munsif of Kushtia, in the district of Nadia, is appointed to act, until further orders, as a munsif in the district of Bakarganj, to be ordinarily stationed at Pirojpur.

Hooghly-Rajshahi-Malda. — No. 673J. — 26th January 1935.—Babu Rajendra Lal Chakrabatti, Subordinate Judge and Assistant Sessions Judge, Howrah, in the district of Hooghly, is appointed to be Subordinate Judge and Assistant Sessions Judge of Rajshahi and Malda, but for the present to be employed at Malda.

Hooghly-Birbhum. — No. 675J. — 26th January 1935.—Babu Dinesh Chandra Sen, officiating Subordinate Judge of Hooghly, is appointed to act, until further orders, as Subordinate Judge and Assistant Sessions Judge of Birbhum, *vice* Babu Nalini Nath Das Gupta, transferred.

Jessore.—No. 677J. — 26th January 1935. —Maulvi Muhammad Sader Hossain, additional munsif of Jhenida, in the district of Jessore, is appointed to be a munsif in the said district, to be ordinarily stationed at Jhenida.

Jessore-Chittagong. — No. 679J. — 26th January 1935.—Babu Pushpita Ranjan Mukharji, munsif of Jhenida, in the district of Jessore, is appointed to be a munsif in the district of Chittagong, to be ordinarily stationed at Patiya.

24-Parganas-Bakarganj.—No. 681J.—26th January 1935.—Babu Jagat Nath Basu Ray, munsif of Sealdah, in the district of the 24-Parganas, is appointed to be a munsif in the district of Bakarganj, to be ordinarily stationed at Bhola.

24-Parganas-Bakarganj.—No. 683J.—26th January 1935.—Mr. Santi Priya Basu, munsif of Sealdah, in the district of the 24-Parganas, is appointed to be a munsif in the district of Bakarganj, to be ordinarily stationed at Patuakhali.

Hooghly.—No. 685J.—26th January 1935.—The services of Babu Rupamay Chatarji, munsif of Howrah, in the district of Hooghly, on leave, are placed at the disposal of the Government of Assam.

24-Parganas-Chittagong.—No. 686J.—26th January 1935.—Babu Narayan Chandra Basu, munsif of Alipore, in the district of the 24-Parganas, is appointed to be a munsif in the district of Chittagong, to be ordinarily stationed at the Sadar station.

Khulna-24-Parganas. — No. 688J. — 26th January 1935.—Babu Bijan Lal Mukharji, munsif of Bagerhat, in the district of Khulna, is appointed to be a munsif in the district of the 24-Parganas, to be ordinarily stationed at Alipore.

Noakhali-Pabna-Bogra.—No. 690J.—26th January 1935.—Babu Abinash Chandra Ghosh, munsif of Lakshmipur, in the district of Noakhali, is appointed to be a munsif in the district of Pabna and Bogra, to be ordinarily stationed at Pabna.

Khulna-Tippera.—No. 692J.—26th January 1935.—Babu Nagendra Nath Mukharji, munsif of Satkhira, in the district of Khulna, is appointed to be a munsif in the district of Tippera, to be ordinarily stationed at Chandhur.

Hooghly-Khulna.—No. 694J.—26th January 1935.—Babu Sudhir Ranjan Ray Chaudhuri, munsif of Hooghly (Sadar), is appointed to be a munsif in the district of Khulna, to be ordinarily stationed at Satkhira.

Rajshahi-Malda-Chittagong.—No. 696J.—26th January 1935.—Babu Santosh Kumar Mitra, munsif of Nator, in the district of Rajshahi and Malda, on leave, is appointed to be a munsif in the district of Chittagong, to be ordinarily stationed at Patiya.

Hooghly-Mymensingh. — No. 698J.—26th January 1935.—Babu Birendra Narayan Ray, munsif of Howrah, in the district of Hooghly, on leave, is appointed to be a munsif in the district of Mymensingh, to be ordinarily stationed at Iswarganj.

Jessore-Pabna-Bogra. — No. 700J. — 26th January 1935.—Mr. Mazheruddin Ahmad, munsif of Narail, in the district of Jessore, is appointed to be a munsif in the district of Pabna and Bogra, to be ordinarily stationed at Sirajganj.

Chittagong-Bankura. — No. 702J. — 26th January 1935. — Babu Manindra Nath Mukharji, munsif of Satkania, in the district of Chittagong, is appointed to be a munsif in the district of Bankura, to be ordinarily stationed at Khatra.

Mymensingh-Chittagong.—No. 704J.—26th January 1935.—Maulvi Muhammad Hanif Bhuya, officiating munsif, employed as Stamp Inspector, Mymensingh, is appointed to act, until further orders, as a munsif in the district of Chittagong, to be ordinarily stationed at Fatikchari.

Faridpur-Midnapore. — No. 706J. — 26th January 1935.—Babu Dhirendra Narayan Chakrabatti, officiating additional munsif of Faridpur (Sadar), is appointed to act, until further orders, as a munsif in the district of Midnapore, to be ordinarily stationed at Ghatal, *vice* Maulvi Omer Mallik, granted leave.

Hooghly-Mymensingh.—No. 708J.—26th January 1935.—Babu Sitangshu Bhusan Basu, officiating munsif of Howrah in the district of Hooghly, is appointed to act, until further orders, as a munsif in the district of Mymensingh, to be ordinarily stationed at Jamalpur

Mymensingh.—No. 710J.—26th January 1935.—Babu Gauri Sankar Chatarji, officiating munsif of Jamalpur in the district of Mymensingh, is appointed to act, until further orders, as a munsif in the said district, to be ordinarily stationed at Tangail.

24-Parganas-Hooghly.—No. 712J. — 26th January 1935.—Babu Syamadas Chatarji, officiating munsif of Baruipur, in the district of the 24-Parganas, is appointed to act, until further orders, as a munsif in the district of Hooghly, to be ordinarily stationed at Arambagh.

Faridpur-Chittagong. — No. 714J.—26th January 1935.—Babu Manmatha Nath Ray, officiating munsif of Goalundo, in the district of Faridpur, is appointed to act, until further orders, as additional munsif in the district of Chittagong, for the present to be employed at the Sadar station.

Birbhum-Mymensingh. — No. 716J.—26th January 1935.—Maulvi Amiruddin Sarkar, officiating munsif of Rampurhat, in the district of Birbhum, is appointed to act, until further orders, as Stamp Inspector, Mymensingh.

Chittagong. No. 718J. — 26th January 1935.—Babu Brajendra Lal Sarkar, officiating munsif of Fatikchari, in the district of Chittagong, is appointed to act, until further orders, as a munsif in the said district, to be ordinarily stationed at Satkania.

Jessore.—No. 720J.—26th January 1935.—Babu Ramani Ranjan Biswas, officiating munsif of Jessore (Sadar), is appointed to act, until further orders, as a munsif in the said district, to be ordinarily stationed at Narail.

Bakarganj.—No. 722J.—26th January 1935.—Babu Himangshu Bikas Basu, officiating munsif of Patuakhali, in the district of Bakarganj, is appointed to act, until further orders, as a munsif in the said district, to be ordinarily stationed at Pirojpur.

Pabna-Bogra-Faridpur.—No. 724J. — 26th January 1935.—Babu Rajani Kanta Chaudhuri, munsif of Pabna, in the district of Pabna and Bogra, is appointed to be a munsif, in the district of Faridpur, to be ordinarily stationed at Gopalganj.

Rajshahi-Malda-Chittagong.—No. 726J. — 26th January 1935.—Babu Indu Sekhar Basu, munsif of Naogaon, in the district of Rajshahi and Malda, is appointed to act, until further orders, as second additional Subordinate Judge of Chittagong, during the absence, on leave, of Babu Ram Lal Banarji, or until further orders.

Faridpur-Pabna-Bogra.—No. 728J.—26th January 1935.—Babu Tarani Kanta Nag, officiating Subordinate Judge of Faridpur, is appointed to act, until further orders, as Subordinate Judge of Pabna, in the district of Pabna and Bogra.

Dacca.—No. 730J.—26th January 1935.—Babu Mayataru Haldar, officiating Subordinate Judge, is appointed to act, until further orders, as Subordinate Judge and Assistant Sessions Judge of Dacca.

Dacca.—No. 733J.—26th January 1935.—The services of Babu Bhuban Mohan Singh, officiating Subordinate Judge of Dacca, are placed at the disposal of the Government of Assam.

Bakarganj-Noakhali. — No. 734J. — 26th January 1935.—Babu Suresh Chandra Sen, No. II, munsif of Patuakhali, in the district of Bakarganj, is appointed to act, until further orders, as Subordinate Judge of Noakhali.

Chittagong.—No. 736J.—26th January 1935.—Maulvi Saiyid Amjad Ali, munsif of Chittagong (Sadar), is appointed to act, until further orders, as Subordinate Judge of the said district.

Midnapore-Chittagong.—No. 738J.—26th January 1935.—Babu Dwijendra Nath Das Gupta, officiating munsif of Dantan, in the district of Midnapore, is appointed to act, until further orders, as a munsif in the district of Chittagong, to be ordinarily stationed at the Sadar station.

Burdwan-Bakarganj.—No. 740J. — 26th January 1935.—Maulvi Abul Quasem, officiating munsif of Katwa, in the district of Burdwan, is appointed to act, until further orders, as a munsif in the district of Bakarganj, to be ordinarily stationed at Patuakhali.

Bakarganj-Khulna.—No. 742J.—26th January 1935.—Babu Phanindra Mohan Lahiri, officiating munsif of Pirojpur, in the district of Bakarganj, is appointed to act, as a munsif, in the district of Khulna, to be ordinarily stationed at the Sadar station, during the absence, on leave, of Maulvi Shahabuddin Ahmed, or until further orders.

Leave.

Dacca.—No. 745J.—14th December 1934.—Babu Nripendra Nath Bagchi, munsif of Dacca (Sadar), is allowed leave on average pay for four days, under rules 81(*b*)(*ii*) and 82(*b*) of the Fundamental Rules, with effect from the 2nd January 1935.

Bakarganj—No. 746J.—18th December 1934.—In modication of the leave granted to him under the orders of 27th November 1934, Babu Sailendra Nath Mitra, munsif at Barisal, in the district of Bakarganj, is allowed leave on average pay for the period from the 1st to the 22nd December 1934, under rules 81(*b*)(*ii*) and 82(*b*) of the Fundamental Rules.

Midnapore.—No. 747J.—20th December 1934.—Babu Shailendra Nath Chatterji, munsif at Dantan, in the district of Midnapore, is allowed leave on average pay for thirteen days, under rules 81(*b*)(*ii*) and 82(*b*) of the Fundamental Rules, with effect from the 10th December 1934.

Jessore.—No. 748J.—20th December 1934.—Babu Manmatha Kumar Ray, munsif of Magura, in the district of Jessore, is allowed leave on average pay for the period from the 14th January to the 17th February 1935, under rules 81(*b*)(*ii*) and 82(*b*) of the Fundamental Rules.

24-Parganas.—No. 749J.—22nd December 1934.—Mr. Kiran Kumar Bhattacharji, additional munsif, Alipore, in the district of the 24-Parganas, is allowed leave on half average pay, on medical certificate, up to the 22nd December 1934 on urgent necessity, under rule, 82(*c*) of the Fundamental Rules, in extension of the leave granted to him under the orders of the 12th December 1934.

Dacca.—No. 750J.—29th December 1934.—Babu Atul Bihari Mallik, munsif of Dacca (Sadar), is allowed leave on average pay for two months, under rules 81(*b*)(*ii*) and 82(*b*) of the Fundamental Rules, with effect from the 9th January 1935.

Midnapore.—No. 751J.—3rd January 1935. —Maulvi Omer Mallik, munsif of Ghatal, in the district of Midnapore, is allowed leave for four months from the 2nd January 1935, viz., leave on average pay for one month and seventeen days, under rules 82(*b*)(*ii*) and 82(*b*) of the Fundamental Rules and leave on half average pay for the remaining period, under rule 81(*d*) of those rules.

Bankura.—No. 752J.—14th January 1935. —Babu Bhupendra Nath Mukharji, munsif of Bishnupur, in the district of Bankura, is allowed privilege leave on full pay for the period from the 19th January to the 2nd February 1935, under the amendment to Article 271, Civil Service Regulations.

No. 601J.—26th January 1935.—Babu Ram Lal Banarji, officiating Subordinate Judge, is allowed leave for the period from the 27th January 1935 to the 16th February 1935, in extension of the leave already granted to him, viz., leave on average pay for eleven days, *i.e.*, up to the 6th February 1935, under Fundamental Rules 81 (*b*) (*ii*) and 82 (*d*) and leave on half average pay for the remaining period, under Fundamental Rule 81 (*d*).

NOTIFICATIONS.

Rangpur.—No. 424J.—24th January 1935. —In exercise of the power conferred by section 65 of the Bengal Village Self-Government Act, 1919 (Bengal Act V of 1919), the Governor in Council is pleased to appoint Maulvi Syed Shah Jahan, a member of the Tamfat union board within the Kotwali police-station in the Sadar subdivision of the Rangpur district, to be, during his term of office as such member, a member of the union bench within the jurisdiction of the said union board for the purposes of that section, *vice* Maulvi Syed Yusuf Ali, deceased.

Rangpur.—No. 425J.—24th January 1935. —In exercise of the power conferred by section 73 of the Bengal Village Self-Government Act, 1919 (Bengal Act V of 1919), the Governor in Council is pleased to appoint Maulvi Syed Shah Jahan, a member of the Tamfat union board within the Kotwali police-station in the Sadar subdivision of the Rangpur district, to be, during his term of office as such member, a member of the union court within the jurisdiction of the said union board for the purposes of that section, *vice* Maulvi Syed Yusuf Ali, deceased.

Dacca.—No. 427J.—24th January 1935.—In exercise of the power conferred by section 65 of the Bengal Village Self-Government Act, 1919 (Bengal Act V of 1919), the Governor in Council is pleased to appoint the following members of the Bandhura union board within the Nawabganj police-station in the Sadar (South) subdivision of the Dacca district, to be, during their term of office as such members, a union bench within the jurisdiction of the said union board for the purposes of that section:—

Mr. Domingo Gomes.

Mr. Vincent Gomes.

Dr. Habibur Rohman.

Maulvi Abdul Hamid Dewan.

Babu Iswar Chandra Saha.

2. This notification will take effect from the date of the first meeting of the reconstituted union board at which a quorum is present.

Dacca.—No. 428J.—24th January 1935.—In exercise of the power conferred by section 73 of the Bengal Village Self-Government Act, 1919 (Bengal Act V of 1919), the Governor in Council is pleased to appoint the following members of the Bandhura union board within the Nawabganj police-station in the Sadar (South) subdivision of the Dacca district, to be, during their term of office as such members, a union court within the jurisdiction of the said union board for the purposes of that section:—

Mr. Domingo Gomes.

Mr. Vincent Gomes.

Dr. Habibur Rohman.

Maulvi Abdul Hamid Dewan.

Babu Iswar Chandra Saha.

2. This notification will take effect from the date of the first meeting of the reconstituted union board at which a quorum is present.

Bogra.—No. 480J.—24th January 1935.—In exercise of the power conferred by section 65 of the Bengal Village Self-Government Act, 1919 (Bengal Act V of 1919), the Governor in Council is pleased to appoint Babu Prafulla Chandra Ghosh, a member of the Jaipurhat union board within the Jaipurhat police-station in the Sadar subdivision of the Bogra district, to be, during his term of office as such member, a member of the union bench within the jurisdiction of the said union board for the purposes of that section.

Bogra.—No. 481J.—24th January 1935.—In exercise of the power conferred by section 73 of the Bengal Village Self-Government Act, 1919 (Bengal Act V of 1919), the Governor in Council is pleased to appoint Babu Prafulla Chandra Ghosh, a member of the Jaipurhat union board within the Jaipurhat police-station in the Sadar subdivision of the Bogra district, to be, during his term of office as such member, a member of the union court within the jurisdiction of the said union board, for the purposes of that section.

Rangpur-Jalpaiguri.—No. 439J.—24th January 1935.—In exercise of the power conferred by sub-section (*1*) of section 13 of the Bengal, Agra and Assam Civil Courts Act, 1887 (XII of 1887), the Governor in Council is pleased to declare that the chit lands specified in the following schedule, should henceforth be excluded from the local limits of the Sadar munsifi in the district of Rangpur and included within the local limits of the Jalpaiguri Sadar munsifi :—

Thak Chak No. of chit lands.	Name of village to which appertains.	General J. L. No. of thana Kaliganj.	Remarks.
3, 4, 8, 9, 10, 11, 12, 13, 14, 16, 17, 19, A and B.	Bara Saradubi ..	13	All these chit lands are situated within the village "Sibram," J. L. No. 56, district Jalpaiguri.
6 ..	Gotamari ..	24	

Rangpur-Dinajpur.—No. 440J.—24th January 1935.—In exercise of the power conferred by sub-section (*1*) of section 13 of the Bengal, Agra and Assam Civil Courts Act, 1887 (XII of 1887), the Governor in Council is pleased to declare that the chit lands specified in the following schedule, should henceforth be excluded from the local limits of the Nilphamari munsifi in the district of Rangpur and included within the local limits of the Sadar munsifi in the district of Dinajpur :—

Thak Chak No. of chit lands.	Name of village to which appertains.	General J. L. No. of thana Nilphamari.	Remarks.
8, 10, 11, 16, 17, 18, 20, 21, 22, 23, 24, 25, 26, 27, 28, 29, 35, 46, 51, 53, 54 and 55.	Lakshanpur ..	101	All these chit lands are situated within the village "Belaichandi," J. L. No. 3, police-station Parbatipur, district Dinajpur.
1, 2, 3, 4, 5 and 6 ..	Ditto ..	101	All these chit lands are situated within the village "Raghunathpur," J. L. No. 41, police-station Parbatipur, district Dinajpur.
4 ..	Ditto ..	101	This chit land is situated within the village "Harirampur," J. L. No. 6, police-station Parbatipur, district Dinajpur.
4 ..	Ditto ..	101	This chit land is situated within the village "Rampur," J. L. No. 37, police-station Parbatipur, district Dinajpur.

Rangpu -Dinajpur.—No. 441J.—24th January 1935.—In exercise of the power conferred by sub-section (*1*) of section 13 of the Bengal, Agra and Assam Civil Courts Act, 1887 (XII of 1887), the Governor in Council is pleased to declare that the chit land specified in the following schedule, should henceforth be excluded from the local limits of the Nilphamari munsifi in the district of Rangpur and included within the local limits of the Sadar munsifi in the district of Dinajpur :—

Thak Chak No. of chit land.	Name of village to which appertains.	General J. L. No. of thana Nilphamari.	Remarks.
*B ..	Baradaha ..	87	This chit land is situated within mauza "Chak Bhola," J. L. No. 652, police-station Chirirbandar, district Dinajpur. *Thak is not available.

Dinajpur-Rangpur.—No. 442J.—24th January 1935.—In exercise of the power conferred by sub-section (*1*) of section 13 of the Bengal, Agra and Assam Civil Courts Act, 1887 (XII of 1887), the Governor in Council is pleased to declare that the chit lands specified in the following schedule should henceforth be excluded from the local limits of the Sadar munsifi in the district of Dinajpur and included within the local limits of the Nilphamari munsifi in the district of Rangpur :—

Thak Chak No. of chit lands.	Name of village to which appertains.	General J. L. No. of thana Parbatipur.	Remarks.
*A ..	Harirampur ..	6	This chit land is situated on the south-west corner of village "Saidpur," J. L. No. 99, police-station Saidpur, district Rangpur. *Thak is not available.
1, 2, 3, 4, 5, 6, 7 and 8	Belaichandi ..	3	All these chit lands are situated within the village "Bangalipur," J. L. No. 100, police-station Saidpur, district Rangpur.
1, 2, 3, 4, 5, 6, 7, 8, 9, 10, 11, 12, 13, 14, 15, 16, 17 and 18.	Ditto ..	3	All these chit lands are situated within the village "Lakshanpur," J. L. No. 101, police-station Saidpur, district Rangpur.

Jalpaiguri-Rangpur.—No. 443J.—24th January 1935.—In exercise of the power conferred by sub-section (*1*) of section 13 of the Bengal, Agra and Assam Civil Courts Act, 1887 (XII of 1887), the Governor in Council is pleased to declare that the chit lands specified in the following schedule, should henceforth be excluded from the local limits of the Jalpaiguri Sadar munsifi and included within the local limits of the Rangpur Sadar munsifi :—

Thak Chak No. of chit lands.	Name of village to which appertains.	General J. L. No. of thana Patgram.	Remarks.
1 ..	Sibram ..	56	This chit land is situated within the village "Dalalpara," J. L. No. 11, police-station Hatibandha, district Rangpur.
2 ..	Ditto ..	56	This chit land is situated within the village "Ramaniganj," J. L. No. 10, police-station Hatibandha, district Rangpur.
5 ..	Ditto ..	56	This chit land is situated within the village "Dolapara," J. L. No. 15, police-station Hatibandha, district Rangpur.
7 and 8 ..	Ditto ..	56	These two chit lands are situated within the village "Purba Fakirpara," J. L. No. 14, police-station Hatibandha, district Rangpur.
10, 11, 12, 13 and 14	Ditto ..	56	All these chit lands are situated within the village "Bara Saradubi," J. L. No. 13, police-station Hatibandha, district Rangpur.
15, 16 and 17 ..	Sibnath ..	59	These chit lands are situated within the village "Bara Saradubi," J. L. No. 13, police-station Hatibandha, district Rangpur.
18, 20 and 22 ..	Ditto ..	59	These chit lands are within village "Purba Fakirpara," J. L. No. 14, police-station Hatibandha, district Rangpur.
2 ..	Jamgram ..	57	This chit land is within village "Thengjhara," J. L. No. 1, police-station Hatibandha, district Rangpur.
1 ..	Kuchhibari ..	23	Ditto.

Jalpaiguri-Rangpur.—No. 444J.—24th January 1935.—In exercise of the power conferred by sub-section (*1*) of section 13 of the Bengal, Agra and Assam Civil Courts Act, 1887 (XII of 1887), the Governor in Council is pleased to declare that the chit land specified in the following schedule, should henceforth be excluded from the local limits of the Jalpaiguri Sadar munsifi and included within the local limits of the Nilphamari munsifi in the district of Rangpur :—

Thak Chak No. of chit land.	Name of village to which appertains.	General J. L. No. of thana Boda.	Remarks.
45 ..	Sonahar ..	327	This chit land is situated within the village "Gorgram," J. L. No. 4, police-station Nilphamari, district Rangpur.

Nadia.—No. 483J.—24th January 1935.—In exercise of the power conferred by section 65 of the Bengal Village Self-Government Act, 1919 (Bengal Act V of 1919), the Governor in Council is pleased to appoint Munshi Amiruddin Biswas, a member of the Mira union board within the Kaliganj police-station in the Sadar subdivision of the Nadia district, to be, during his term of office as such member, a member of the union bench within the jurisdiction of the said union board for the purposes of that section, *vice* Sekendar Shaik, deceased.

Nadia.—No. 484J.—24th January 1935.—In exercise of the power conferred by section 73 of the Bengal Village Self-Government Act, 1919 (Bengal Act V of 1919), the Governor in Council is pleased to appoint Munshi Amiruddin Biswas, a member of the Mira union board within the Kaliganj police-station in the Sadar subdivision of the Nadia district, to be, during his term of office as such member, a member of the union court within the jurisdiction of the said union board for the purposes of that section, *vice* Sekendar Shaik, deceased.

Dacca.—No. 490J.—24th January 1935.—In exercise of the power conferred by section 65 of the Bengal Village Self-Government Act, 1919 (Bengal Act V of 1919), the Governor in Council is pleased to appoint Munshi Yasin Howladar of Kurigaon, a member of the Bajgaon union board within the Lohajung police-station in the Munshiganj subdivision of the Dacca district, to be, during his term of office as such member, a member of the union bench within the jurisdiction of the said union board for the purposes of that section, *vice* Munshi Abbas Mollah, deceased.

Dacca.—No. 491J.—24th January 1935.—In exercise of the power conferred by section 73 of the Bengal Village Self-Government Act, 1919 (Bengal Act V of 1919), the Governor in Council is pleased to appoint Munshi Yasin Howladar of Kurigaon, a member of the Bejgaon union board within the Lohajung police-station in the Munshiganj subdivision of the Dacca district, to be, during his term of office as such member, a member of the union court within the jurisdiction of the said union board for the purposes of that section, *vice* Munshi Abbas Mollah, deceased.

Dacca.—No. 517J.—26th January 1935.—In exercise of the power conferred by section 65 of the Bengal Village Self-Government Act, 1919 (Bengal Act V of 1919), the Governor in Council is pleased to appoint Babu Nagendra Chandra Gope, a member of the Sripur union board within the Sripur police-station in the Sadar (north) subdivision of the Dacca district, to be, during his term of office as such member, a member of the union bench within the jurisdiction of the said union board for the purposes of that section, *vice* Babu Nagendra Nath Mukharji, resigned.

Dacca.—No. 518J.—26th January 1935.—In exercise of the power conferred by section 73 of the Bengal Village Self-Government Act, 1919 (Bengal Act V of 1919), the Governor in Council is pleased to appoint Babu Nagendra Chandra Gope, a member of the Sripur union board within the Sripur police-station in the Sadar (north) subdivision of the Dacca district, to be, during his term of office as such member, a member of the union court within the jurisdiction of the said union board for the purposes of that section, *vice* Babu Nagendra Nath Mukharji, resigned.

Dacca.—No. 519J.—26th January 1935.—In exercise of the power conferred by section 65 of the Bengal Village Self-Government Act, 1919 (Bengal Act V of 1919), the Governor in Council is pleased to appoint the following members of the Chandhar union board within the Singair police-station in the Manikganj subdivision of the Dacca district, to be, during their term of office as such members, a union bench within the jurisdiction of the said union board for the purposes of that section:—

Babu Hari Ananda Shaha.
Munshi Sheik Palan Dewan.

Dacca.—No. 520J.—26th January 1935.—In exercise of the power conferred by section 73 of the Bengal Village Self-Government Act, 1919 (Bengal Act V of 1919), the Governor in Council is pleased to appoint the following members of the Chandhar union board within the Singair police-station in the Manikganj subdivision of the Dacca district, to be, during their term of office as such members, a union court within the jurisdiction of the said union board for the purposes of that section:—

Babu Hari Ananda Shaha.
Munshi Sheik Palan Dewan.

T. J. Y. ROXBURGH,
Secy. to the Govt. of Bengal (offg.).

LOCAL SELF-GOVERNMENT DEPARTMENT.

NOTIFICATIONS.

Minister-in-charge: The Hon'ble Sir Bijoy Prasad Singh Roy, Kt.

Khulna. — No. 706L.S.-G.—26th January 1935.—In pursuance of rule 7 of the rules made by the Governor-General in Council, under section 4 of the Local Authorities' Loans Act, 1914, and published under Government of India's notification No. 1020A., dated 10th November 1914, it is hereby notified for general information that the Government of Bengal (Ministry of Local Self-Government) intend to sanction, under rule 10 of the said rules, the following application from the Khulna district board for a loan of Rs. 10,000 from Government for the construction of a cart bridge over Sreerampur Khal bearing interest at the rate of 4 per cent. per annum and repayable in twenty half-yearly instalments of Rs. 611-9 each unless good reasons are shown to the contrary within one month from the date of publication of this notification within the area of the said district board.

Application from the Khulna District Board for a loan of Rs. 10,000 from Government.

1	2	3	4	5	6	7	8	9	10	11
Construction of a cart bridge over Sreerampur khal (between Kulia and Boyra) on Alipur-Debhatta road. The estimated cost is Rs. 22,000.	Rs. 10,000.	Khulna District Fund.	Bengal Local Self-Government Act (Act III of 1885).	Ten years.	4 per cent. simple interest.	One.	Rs. 10,000.	21st March 1935.	Twenty half-yearly instalments payable on the 21st March and 21st September every year.	Rs. 611-9.

Receipt of loan. (a)	(b)	(c)	(d)	(e)	Repayment of loan. (f)	(g)
The work or works for the construction or repairs of which the loan is required.	The amount which it is proposed to borrow.	The fund or funds on the security of which it is proposed to borrow.	The law or laws under which the said fund or funds is or are levied, received or held.	The period for which the loan is required.	The rate of interest at which it is proposed to borrow.	The number of instalments in which it is proposed that the loan should be taken.	The amount of each instalment.	The date proposed for receiving each such instalment.	The number of instalments on which the loan is repayable and the dates of payments thereof.	The amount of each instalment.

Financial position of the Khulna District Board.

Revenue (details for each of the three preceding years).

Sources from which the revenue is derived.	Amount for— 1931-32.	1932-33.	1933-34.
	Rs.	Rs.	Rs.
Land Revenue	2,337	2,278	1,785
Provincial rates	5,11,982	4,58,160	4,17,076
Interest	4,791	8,080	10,518
Law and Justice	38	59	51
Police	306	134	431
Education	62,833	67,379	74,151
Medical	93,480	93,267	92,766
Scientific and other minor departments.	552	120	120
Miscellaneous	278	301	5,588
Civil Works	51,706	69,228	53,215
Total ordinary income	7,28,300	6,99,706	6,55,651
Debts, deposits and advances	27,055	30,748	24,884
Loan from Government	..	..	..
Total	7,55,355	7,30,454	6,80,535
Opening balance	92,630	62,937	44,046
GRAND TOTAL	8,47,985	7,93,391	7,24,581

Expenditure (details for each of the three preceding years).

Objects on which the expenditure is incurred.	Amount for— 1931-32.	1932-33.	1933-34.
	Rs.	Rs.	Rs.
Refund and drawbacks	4	..	..
Land Revenue	335	314	182
Interest	8,374	8,010	7,623
General Administration	27,110	29,412	25,287
Law and Justice	216	107	79
Police	11	22	4
Education	1,42,108	1,39,997	1,37,117
Medical	1,94,657	1,94,241	1,71,477
Scientific, etc.	8,887	8,270	6,920
Superannuation allowance and pension	6,757	7,553	7,354
Stationery and Printing	1,192	1,227	992
Miscellaneous	2,766	857	553
Civil Works	3,64,851	3,24,470	2,55,075
Total expenditure from ordinary income.	7,57,298	7,14,480	6,12,863
Deposits and advances	22,432	29,183	27,659
Repayment of Loan	5,318	5,682	6,069
Total	7,85,048	7,49,345	6,46,791
Closing balance	62,937	44,046	77,790
GRAND TOTAL	8,47,985	7,93,391	7,24,581

Rs. —328.

The normal surplus which may be expected in future, i.e., difference between the average ordinary income and expenditure, calculated in figures in the columns 13 to 15 and 17 to 19, respectively.

In addition to the details required on the reverse, clear informations are given below under the following heads:—

(*a*) If the ordinary surplus is insufficient to meet the charges of the proposed loan, the particular steps which the district board has taken or has agreed to take to make good the deficiency.	(*a*) The ordinary surplus is not insufficient if the closing and opening balances of the years are taken into account.
(*b*) Possible means of income in the revenue of the district board.	(*b*) As the bridge will be a toll bar one there will be an extra income out of the same. Moreover the cess rates have been reduced for the present. There will be substantial increase in income on the re-imposition of the full rates.
(*c*) A statement of all outstanding loans as well as the annual charges involved on their account.	(*c*) (1) Loan of Rs. 40,000 taken on 20th March 1923, out of which 22 instalments of Rs. 1,873-2 each were paid up to date out of 40 instalments. (2) Loan of Rs. 30,000 taken on 14th February 1925, out of which 19 instalments of Rs. 1,404-13 each were paid up to date out of 40 instalments. (3) Loan of Rs. 30,000 taken on 11th March 1926, out of which 16 instalments of Rs. 1,404-13 each were paid up to date out of 40 instalments. (4) Loan of Rs. 30,000 taken on 1st February 1928, out of which 13 instalments of Rs. 1,297-14 each were paid up to date out of 40 instalments. (5) Loan of Rs. 20,000 taken on 16th November 1929, out of which 9 instalments of Rs. 865-4 each were paid up to date out of 40 instalments.
(*d*) Any explanation in regard to receipts and expenditure to show the financial position of the board when such is otherwise than the ordinary surplus would indicate.	(*d*) Out of current income Rs. 66,000 were spent per year on an average during the last three years for original communication. If the loan is granted there would be no difficulty in repaying it out of this allotment, besides from the income from the toll on the bridge.

Mymensingh.—No. 723M.—28th January 1935.—In exercise of the power conferred by section 20 of the Bengal Municipal Act, 1932 (Bengal Act XV of 1932), the Government of Bengal (Ministry of Local Self-Government) are pleased to direct after consideration of the views of the Commissioners of the Mymensingh Municipality at a meeting, that—

(*1*) the Mymensingh Municipality, in the district of Mymensingh, shall for the purpose of election of Commissioners be divided into six wards as shown in columns 1 and 2 of the following table ; and

(*2*) the two wards I and II of the said municipality shall be grouped into one special ward for the purpose of election to one of the five seats reserved for the minority community in this municipality and that the number of Commissioners to be elected from the different wards (including the special ward) of the municipality shall be as shown in columns 3 and 4 of the table :—

Name of ward.	Boundaries or extent of ward.	Number of seats other than the reserved seat shown in column 4 to which Commissioners are to be elected.	Number of seats reserved for the minority community.
1	2	3	4
I	North—River Brahmaputra and Begunbari Khal	2	1
	East—River Brahmaputra, Koranipara Road, Panditbari Bye-Lane, Ram Babu's Road and Radhika Naha's Road.		
	South—Boundary Road.		
	West—Boundary Road, Galganda Road and a line in continuation of Galganda Road up to the river.		
II	North—Koranipara Road	2	
	East—River Brahmaputra, Kamarpatty Road.		
	South—Kamarpatty Road, Shakheripatty Road and Ram Babu's Road.		
	West—Ram Babu's Road, Panditbari Bye-Lane.		
III	North—Ram Babu's Road, Boundary Road ..	2	1
	East—Chandrakanta Ghose's Road, South Boundary Bye-Lane.		
	South—Boundary Road, Ramkrishna Mission Road, South Boundary Road.		
	West—South Boundary Road, Dapunia Road, Railway Line, Radhika Naha's Road.		
IV	North—River Brahmaputra, Kamarpatty Road	2	1
	East—River Brahmaputra, Maharaja Road.		
	South—Maharaja Road, Station Road.		
	West—Shakheripatty Road, Kamarpatty Road.		
V	North—Maharaja Road, River Brahmaputra	2	1
	East—River Brahmaputra, a line through Assam Bengal Railway colony from the river to Eastern Bengal Railway line passing by the municipal pillar on the District Board Toke Road.		
	South—Eastern Bengal Railway line and Boundary Road.		
	West—Boundary Road, Jamir Lambari Road, Brahmapalli Road and a line through station main building joining Brahmapalli and Maharaja Roads		
VI	North—Station Road	1	1
	East—A line through station main building joining Brahmapalli Road and Maharaja Road, Brahmapalli Road, Jamir Lambari Road.		
	South—Boundary Road.		
	West—Chandrakanta Ghose's Road, Boundary Road.		

2. This cancels notification No. 165M., dated the 10th January 1935.

Burdwan.—No. 699L.S.-G.—25th January 1935.—In exercise of the power conferred by section 22 of the Bengal Local Self-Government Act, 1885 (Bengal Act III of 1885), the Government of Bengal (Ministry of Local Self-Government) are pleased to approve the election, by members of the Burdwan district board, of Raja Bahadur Maniloll Singh Roy, C.I.E., of Chakdighi, to be their Chairman.

Chittagong.—No. 765L.S.-G.—29th January 1935.—In exercise of the power conferred by section 3 of the Bengal Motor Vehicles Tax Act, 1932 (Bengal Act I of 1932), the Government of Bengal (Ministry of Local Self-Government) are pleased to appoint the Additional District Magistrate of Chittagong to be the Taxing Officer for the district of Chittagong and are pleased to specify the district as the area within which he shall exercise the powers and perform the duties imposed on the Taxing Officer by or under the said Act.

2. This cancels the notification No. 690-L.S.-G., dated the 19th February 1934.

G. S. DUTT,
Secy. to the Govt. of Bengal.

RESOLUTION—No. 754M.

Calcutta, the 28th January 1935.

Minister-in-charge: The Hon'ble Sir Bijoy Prasad Singh Roy, Kt.

The mal-administration of the South Suburban Municipality (in the district of the 24-Parganas), particularly in respect of the Collection Department, has been under the notice of Government for some time past. In the year 1933-34 a case of embezzlement by a tax collector during the previous year was brought to light. On detailed scrutiny by the auditors the amount embezzled was found to be Rs. 9,789. The defalcation appears to have gone on during 1932-33, and up to the middle of January 1934, and it appears that this was rendered possible by inadequate supervision and by non-observance of the Municipal Account Rules regarding collection on the part of those in charge of the Collection Department. Contrary to the usual practice prevailing in other municipalities in the province, the Collection Department of the municipality was not placed in charge of the Vice-Chairman, nor were any powers delegated to the Vice-Chairman, under section 52 of the Bengal Municipal Act, although the Municipal Account Rules require that some powers should be exercised by the Vice-Chairman for the proper supervision of the Collection Department. In fact the Chairman of the South Suburban Municipality chose to keep all powers to himself, with the result that important checks and verifications provided by the rules were neglected, and this greatly facilitated the defalcation referred to above.

2. The Audit Report for the year 1933-34 estimates the unrealised taxes at Rs. 61,845. The statement below* shows the percentage of current collections in the municipality during the last six years. It will be observed that the rate of collection has been falling below the standard of 95 per cent., fixed by Government, since the year 1931-32, when the present body of Municipal Commissioners came to office. No effective measures appear to have been taken to collect arrears of taxes. It is reported that as many as 637 warrants, issued during the years 1932-33 and 1933-34, were not executed at all and there was no order of the municipal executive either for the cancellation of these warrants or for further action regarding them. The Audit Report also mentions that out of 381 warrants issued during the year 1933-34 only 146 were executed, and no orders for remission could be pointed out in cases where the warrant fees were not realised. The Audit Report further reveals that very little control is exercised by the municipal executive over the proper maintenance of the stock account of the receipt books issued to the tax collectors—

*1928-29	.. 97·3	per cent.
1929-30	.. 97·2	,,
1930-31	.. 95·4	,,
1931-32	.. 80·2	,,
1932-33	.. 77·5	,,
1933-34	.. 77·5	,,

As a result of the poor collection of taxes, the financial condition of the municipality has become precarious. The actual cash position of the municipal fund at the end of the year 1933-34 was one of deficit to the extent of Rs. 17,887 as shown below:—

		Rs.
Cash-book balance	..	16,189
Unpaid bills	..	23,064
Refundable deposits and balances of subsidiary funds and unspent contributions	..	11,012
Real cash-book balance	..	17,887

The amount of unpaid bills rose from Rs. 8,161 to Rs. 23,064 during the three years ending 1933-34. In August 1934 the Subdivisional Officer of Alipore made a personal enquiry into the affairs of the municipality and his report revealed various irregularities and abuses of power in the administration of the municipality, particularly in respect of the Collection Department.

3. In view of the above state of affairs, Government called upon the Municipal Commissioners under section 550, sub-section (*1*) of the Bengal Municipal Act to show cause why steps should not be taken to appoint a suitable person to take charge of the Collection Department of the municipality. In reply, the Municipal Commissioners have stated that they have no objection to the action proposed to be taken by Government, and that they have no views to offer to the contrary.

The Government of Bengal (Ministry of Local Self-Government) have come to the conclusion that the Commissioners of the South Suburban Municipality have, in respect of the Collection Department of the municipality, abused their powers and persistently made default in the performance of duties imposed on them by the Municipal Act. In exercise of the power conferred by section 550, sub-section (*2*) of the Bengal Municipal Act, 1932, they accordingly direct that the Sadar Subdivisional Officer, 24-Parganas, will take charge of the above department for a period of one year with effect from the date of publication of this resolution in the *Calcutta Gazette*.

4. Ordered that this resolution be published in the *Calcutta Gazette*.

By order of the Govt. of Bengal
(Ministry of Local Self-Govt.),

G. S. DUTT,
Secy. to the Govt. of Bengal.

Medical.

Minister-in-charge: The Hon'ble Sir Bijoy Prasad Singh Roy, Kt.

Calcutta. — No. 181Medl.—22nd January 1935.—Temporary Assistant Surgeon Dr. Ghyas-uddin Ahmed, prior to his taking charge of his duties as House Surgeon to the Professor of Surgery, Medical College Hospitals, Calcutta, was placed on supernumerary duty at the same institution for the period from the 7th to the 12th December 1934.

Hooghly - Burdwan.—No. 193Medl.—23rd January 1935.—Dr. Rash Behari Datta of the Imambara Hospital in the district of Hooghly, is posted to the Asansol subdivision and dispensary in the district of Burdwan, *vice* Dr. Sita Nath Ghosh.

Burdwan - Hooghly.—No. 194Medl.—23rd January 1935.—Dr. Sita Nath Ghosh of the Asansol subdivision and dispensary in the district of Burdwan, is, on relief, appointed as Medical Officer-in-charge of the Imambara Hospital in the district of Hooghly, *vice* Dr. Rash Behari Datta.

Hooghly. — No. 202Medl.—24th January 1935.—Dr. Rash Behari Datta of the Imambara Hospital was appointed to act as Civil Surgeon, Hooghly, in addition to his own duties and without any extra remuneration for the period from the 11th October 1934 to the 13th October 1934.

Calcutta. — No. 214Medl.—25th January 1935.—Dr. Bande Ali Ahmed, on supernumerary duty at the Medical College Hospitals, Calcutta, is appointed to act as House Surgeon, Presidency General Hospital, *vice* Dr. C. W. E. Frederick, transferred.

Calcutta.—No. 232Medl.—26th January 1935.—Dr. Abdul Halim, Junior Demonstrator of Practical Pharmacy, Medical College Hospitals, Calcutta, is appointed to act as Senior Demonstrator of Practical Pharmacy of the same institution, in addition to his own duties and without any extra remuneration, for the period from the 15th September 1934 to the 2nd November 1934.

Calcutta.—No. 235Medl. — 26th January 1935.—Notification No. 3992Medl., dated the 19th December 1934, granting leave on full pay for two months, under Subsidiary Rule 275 (*a*) and the exception thereunder, with effect from the 2nd January 1935, to Dr. Kalipada Banerjee, Assistant Professor of Pathology, School of Tropical Medicine, Calcutta, is hereby cancelled.

NOTIFICATION.

Minister-in-charge: The Hon'ble Sir Bijoy Prasad Singh Roy, Kt.

Howrah.—No. 238Medl. — 26th January 1935.—The Government of Bengal (Ministry of Local Self-Government) are pleased to appoint Mr. Millar M. King as a non-official member of the committee for the management of the Howrah General Hospital, *vice* Mr. J. S. Young, resigned.

G. S. DUTT,
Secy. to the Govt. of Bengal.

Orders by the Surgeon-General with the Government of Bengal.

No. 1660/5P.-2-34.—24th January 1935. — The following seven Sub-Assistant Surgeons are promoted to the selection-grade on a pay of Rs. 200 a month with effect from the dates noted against their names:—

Sub-Assistant Surgeon Dr. Jagatpati Roy —28th September 1933.

Sub-Assistant Surgeon Dr. Sashi Nath Sen Gupta—9th February 1934.

Sub-Assistant Surgeon Dr. Dhirendra Nath Mitra—16th March 1934.

Sub-Assistant Surgeon Dr. Lalit Mohan Adhikari—18th April 1934.

Sub-Assistant Surgeon Dr. Radha Prosanna Chakravartty—1st May 1934.

Sub-Assistant Surgeon Dr. Mohini Mohan Bhattacherji—26th August 1934.

Sub-Assistant Surgeon Dr. Suresh Chandra Das Gupta—16th September 1934.

D. P. GOIL, MAJOR-GENERAL, I.M.S.,
Surgeon-General with the Govt. of Bengal.

EDUCATION DEPARTMENT.

NOTIFICATIONS.

No. 367Edn.—25th January 1935.—In exercise of the power conferred by section 6, subsection (*3*) of the Indian Universities Act, 1904 (VIII of 1904), as amended by the Calcutta University Act, 1921 (VII of 1921), His Excellency the Chancellor of the Calcutta University is pleased to approve of the following elections of Ordinary Fellows by the Registered Graduates of the University, with effect from the dates noted against each:—

Sir Nilratan Sircar, Kt., M.A., M.D., LL.D., D.C.L., M.L.C., with effect from 31st March 1935.

Dr. Harendracoomar Mookerjee, M.A., PH.D., with effect from 25th January 1935.

Darjeeling. — No. 378Edn.—26th January 1935.—Mr. D. H. Prins is appointed temporarily to act as History Master, Victoria Boys' School, Kurseong, with effect from the 1st April 1935, or any subsequent date on which he joins the appointment, during the absence, on leave, of Mr. V. C. Prins, or until further orders.

Minister-in-charge: The Hon'ble Khan Bahadur M. Azizul Haque.

Dacca.—No. 375Edn.—26th January 1935.—The Government of Bengal (Ministry of Education) are pleased to appoint Mr. M. H. Elliot, Assistant Executive Engineer, Dacca, to be a member of the Governing Body of the Ahsanullah School of Engineering, Dacca, for the remaining portion of its term, *vice* Mr. A. Chatterjee, transferred.

Dacca.—No. 399Edn.—26th January 1935.—Maulvi Syed Abdul Bari, Lecturer in Arabic, Islamia Intermediate College, Dacca, acted in the Bengal Educational Service as Professor of the subject at the same College for the period from 10th August 1934 to 21st December 1934.

Midnapore.—No. 347Edn. — 24th January 1935.—Babu Satish Chandra Sikdar, Subdivisional Inspector of Schools, Midnapore, is appointed to act in the Bengal Educational Service as District Inspector of Schools, Midnapore, with effect from the 2nd January 1935, or any subsequent date on which he joined the appointment, during the absence, on leave, of Mr. Manmatha Nath Kar, or until further orders.

Chittagong. — No. 356Edn.—25th January 1935.—Babu Dinesh Chandra Bhattacharjee, Lecturer in Sanskrit, Chittagong College, is appointed to act in the Bengal Educational Service as Professor on the subject at the same College, with effect from the 2nd January 1935, or any subsequent date on which he joined the appointment, during the absence, on leave, of Babu Bhabesh Chandra Banerji, or until further orders.

Dacca.—No. 364Edn.—25th January 1935.—Mr. Birendra Chandra Gupta, Principal, Ahsanullah School of Engineering, Dacca, is allowed leave on average pay for the period from 2nd January to 10th January 1935, under rules 81 (*b*) (*i*) and 82 (*b*) of the Fundamental Rules.

Registration.

NOTIFICATIONS.

Minister-in-charge: The Hon'ble Khan Bahadur M. Azizul Haque.

Dacca.—No. 112Regn.—23rd January 1935.—It is notified for general information that owing to the erosion of the river Padma the Government of Bengal (Ministry of Education) sanction the removal of the office of the Sub-Registrar of Lohajang at Dighali in the district of Dacca to Ghoordoor in the same district with effect from the 1st November 1934. The office will henceforth be styled the office of the Sub-Registrar of Lohajang at Ghoordoor.

Noakhali.—No. 114Regn. — 23rd January 1935.—Maulvi Mufazilur Rahman, District Sub-Registrar of Noakhali, is allowed leave on average pay for three days, with effect from the 8th November 1934, under rule 81 (*b*) (*ii*) of the Fundamental Rules.

Nadia.—No. 117Regn.—23rd January 1935.—In exercise of the power conferred by section 3 of the Bengal Muhammadan Marriages and Divorces Registration Act, 1876 (Bengal Act I of 1876), the Government of Bengal (Ministry of Education) are pleased to appoint Maulvi Sultan Ahmed, to be a Muhammadan Registrar within the police-station of Nakashipara, in the district of Nadia.

Nadia.—No. 118Regn.—23rd January 1935.—In exercise of the power conferred by section 2 of the Kazis' Act, 1880 (Act XII of 1880), the Government of Bengal (Ministry of Education) are pleased to appoint Maulvi Sultan Ahmed to be the Kazi for the celebration of marriages and the performance of other rites and ceremonies within the police-station of Nakashipara, in the district of Nadia.

Midnapore.—No. 129Regn.—25th January 1935.—In exercise of the power conferred by section 3 of the Bengal Muhammadan Marriages and Divorces Registration Act, 1876 (Bengal Act I of 1876), the Government of Bengal (Ministry of Education) are pleased to appoint Maulvi Shaikh Imamuddin to be a Muhammadan Registrar within the police-stations of Khajri and Bhagwanpur, in the district of Midnapore.

Midnapore.—No. 130Regn.—25th January 1935.—In exercise of the power conferred by section 2 of the Kazis' Act, 1880 (Act XII of 1880), the Government of Bengal (Ministry of Education) are pleased to appoint Maulvi Shaikh Imamuddin to be the Kazi for the celebration of marriages and the performance of other rites and ceremonies within the police-stations of Khajri and Bhagwanpur, in the district of Midnapore.

H. R. WILKINSON,
Secy. to the Govt. of Bengal.

Orders by the Inspector-General of Registration, Bengal.

Midnapore.—No. 17.—24th January 1935.—Babu Jamini Kanta Bakshi, Sub-Registrar of Anandapur, in the district of Midnapore, is allowed leave on average pay for two months and fifteen days, under rule 81 (*b*) (*ii*) of the Fundamental Rules, in extension of the leave granted to him in this department notification No. 638, dated the 19th December 1934.

Faridpur.—No. 18.—24th January 1935.—Maulvi Muhammad Yusuf, Sub-Registrar of Muksudpur, in the district of Faridpur, is allowed leave on average pay for one month, under rule 81 (*b*) (*ii*) of the Fundamental Rules, in extension of the leave granted to him in this department notification No. 622, dated the 14th December 1934.

Jalpaiguri.—No. 19.—24th January 1935.—Maulvi Saiyid Abu Zafar, Sub-Registrar of Debiganj, in the district of Jalpaiguri, is allowed leave on average pay for two months, under rule 81 (*b*) (*ii*) of the Fundamental Rules, with effect from the date on which he may be relieved.

Mymensingh - Jalpaiguri.—No. 20.—24th January 1935.—Babu Surendra Chandra Chakrabutti, Sub-Registrar attached to Mymensingh, is appointed to act as Sub-Registrar of Debiganj, in the district of Jalpaiguri, with effect from the date on which he joins the appointment, during the absence, on leave, of Maulvi Saiyid Abu Zafar, Sub-Registrar, or until further orders.

S. AHMED,
Inspector-General of Regn., Bengal.

FINANCE DEPARTMENT.

Audit.

No. 618F.—26th January 1935.—The following corrections, which have been authorised, are published for general information:—

CORRIGENDA.

Fundamental and Subsidiary Rules, 1st Edition (Reprint), 1929.

Page 20—F. R. 22.—Insert the following as item (4) of Audit Instructions below this rule, the entries inserted by Correction Slip Nos. 260, 254 and 280 being numbered (1), (2) and (3), respectively:—

"*Audit Instruction* (*4*).—A time-scale may be of recent introduction, whereas the cadre or class to which it is attached may have been in existence on a graded scale before the time-scale came into force, or it may be that one time-scale has taken the place of another. If a Government servant has held substantively, or officiated in, a post in the cadre or class prior to the introduction of a new time-scale, and has drawn during the period salary or pay equal to a stage, or intermediate between two stages, in the new time-scale, then the initial pay in the new time-scale may be fixed at the salary or pay last drawn and the period during which it was drawn may be counted for increment in the same stage, or if the salary or pay was intermediate between two stages, in the lower stage of that time-scale."

Bengal Financial Rules, First Edition (Reprint), 1930.

Pages 134-135—T. O. 16, S. R. 42, as substituted by correction slip No. 222, dated 25th July 1933.—Insert the following after the word "Sub-Assistant Surgeons" occurring in line 2 of the rule:—

"Assistant Analysts of the Bengal Public Health and the Bengal Excise Laboratories."

Miscellaneous.

NOTIFICATION.

No. 323Misc.—22nd January 1935.—The Governor in Council is pleased to make the following amendments in the notifications concerning—

(1) local holidays in Bengal;

(2) holidays not declared to be "public holidays" in Bengal during 1935.

(1) At the first page of the statement appended to resolution No. 702Misc., dated the 2nd February 1934, published at pages 202-205, Part I of the *Calcutta Gazette*, dated the 8th February 1934, regarding redistribution of "local holidays" in Bengal, etc., *read* ("except in the offices of the Registrar of Assurances, Calcutta, and the Collector of Stamp Revenue, Calcutta") *for* ("except in the office of the Collector of Stamp Revenue, Calcutta") under the heading "Presidency Division—24-Parganas district and Calcutta."

(2) In the notification concerning holidays not declared to be "public holidays" in Bengal during 1935, No. 6518Misc., dated the 3rd September 1934, published at page 1284, Part I of the *Calcutta Gazette*, dated the 6th September 1934, *add* the words "the office of the Registrar of Assurances, Calcutta, and" before the words "the office of the Collector of Stamp Revenue, Calcutta," in the first sentence.

D. GLADDING,
Secy. to the Govt. of Bengal.

COMMERCE DEPARTMENT.

NOTIFICATIONS.

No. 419Com.—22nd January 1935.—In exercise of the power conferred by sub-section (*1*) of section 20 of the Workmen's Compensation Act, 1923 (VIII of 1923), the Governor in Council is pleased to appoint Mr. B. M. Mitra, I.C.S., officiating Additional District and Sessions Judge, 24-Parganas, to be a Commissioner for Workmen's Compensation for the province of Bengal, in addition to his own duties.

No. 529Com.—24th January 1935. — Mr. C. S. Steel, Inspector of Factories, Bengal, is allowed leave for nine months, viz., leave on average pay for six months and on half average pay for three months, under rule 81 (*b*) (*i*) of the Fundamental Rules, with effect from the 1st March 1935, or any subsequent date from which he may avail himself of it.

No. 542Com.—25th January 1935.—In pursuance of rule 4 of the Bengal Boiler Rules, 1928, made under section 29 of the Indian Boilers Act (V of 1923), the Governor in Council is pleased to appoint Mr. W. Milne of the Budge Budge Jute Mills to be a member of the Boiler Commission, Bengal, *vice* Mr. W. H. W. Urquhart.

Certificate of Approval.

No. 439Com.—23rd January 1935.—With reference to rule 7 of the rules issued by the Government of India with their resolution No. 7552—7581-121, dated the 15th September 1913, for regulating the grant by Local Governments of licences to prospect for minerals and the grant of mining leases in British India, it is hereby certified that Messrs. Dalchand Bahadur Singh of 116, Lower Circular Road, Calcutta, are approved by the Government of Bengal as a fit and proper person to whom such licences or leases can be granted in the Presidency of Bengal.

2. Under rule 8 of the aforesaid rules this certificate will expire at midnight on the 31st of December 1935.

Certificate of Approval.

No. 491Com.—23rd January 1935.—With reference to rule 7 of the rules issued by the Government of India with their resolution No. 7552-75-81-121, dated the 15th September 1913, for regulating the grant by Local Governments of licences to prospect for minerals and the grant of mining leases in British India, it is hereby certified that Mr. M. K. Ray of Jainti, district Jalpaiguri, is approved by the Government of Bengal as a fit and proper person to whom such licences or leases can be granted in the Presidency of Bengal.

2. Under rule 8 of the aforesaid rules this certificate will expire at midnight on the 31st of December 1935.

Certificate of Approval.

No. 597Com.—28th January 1935.—With reference to rule 7 of the rules issued by the Government of India with their resolution No. 7552—7581-121, dated the 15th September 1913, for regulating the grant by local Governments of licences to prospect for minerals and the grant of mining leases in British India, it is hereby certified that Babu Motilal Patel of 258, Russa Road, Tollygunj, is approved by the Government of Bengal as a fit and proper person to whom such licences or leases can be granted in the Presidency of Bengal.

2. Under rule 8 of the aforesaid rules this certificate will expire at midnight on the 31st of December 1935.

D. GLADDING,

Secy. to the Govt. of Bengal.

MARINE DEPARTMENT.

NOTIFICATIONS.

No. 1Mne.—18th January 1935.—It is hereby notified under the provision of section 6 of the Calcutta Port Act, 1890, that Mr. C. H. Pratt of Messrs. Hamilton & Co., Ltd., has been re-elected by the Calcutta Trades Association to be a Commissioner for the Port of Calcutta, with effect from the 15th January 1935.

No. 2Mne.—24th January 1935.—It is hereby notified for general information that the ordinary examination of candidates for Certificate of Competency as Masters and Serangs under the Inland Steam Vessels Act, I of 1917, will be held at the Port Office, Calcutta, on the following dates during the year 1935:—

21st January.	15th July.
25th February.	19th August.
18th March.	16th September.
16th April.	28th October.
20th May.	18th November.
17th June.	16th December.

Applications for permission to appear at the examinations must be made to the Principal Officer, Mercantile Marine Department, Calcutta District, not later than three days prior to the date of the examination. All applications should be accompanied by the prescribed fees and the candidates' certificates and testimonials.

No. 3Mne.—24th January 1935.—It is hereby notified for general information that the ordinary examination of candidates for Certificate of Competency as Engine Drivers under the Inland Steam Vessels Act, I of 1917, will be held at the Port Office, Calcutta, on the following dates during the year 1935:—

28th January.	22nd July.
18th February.	26th August.
25th March.	23rd September.
23rd April.	30th October.
27th May.	25th November.
24th June.	19th December.

Applications for permission to appear at the examinations must be made to the Principal Engineer and Ship Surveyor at the Port Office, Calcutta, not later than three days prior to the date of the examination. All applications must be accompanied by the prescribed fees and the candidates' certificates and testimonials.

D. GLADDING,

Secy. to the Govt. of Bengal.

PUBLIC WORKS DEPARTMENT.

Establishment.

NOTIFICATIONS.

Minister-in-charge: The Hon'ble Nawab K. G. M. Faroqui, Khan Bahadur.

No. 133.—23rd January 1935.—In supersession of Bengal Government, Public Works Department, notification No. 117, dated the 29th November 1934, Babu Upendra Nath Mukherjee, Assistant Engineer, was, on return from leave, posted and attached from the 1st to the 8th December 1934 to the Jalpaiguri Division in the Northern Circle and appointed to officiate as Executive Engineer of that division from the 9th December 1934 until further orders, *vice* Mr. T. Mitra, Executive Engineer, transferred.

No. 134. — 24th January 1935. — Babu Bhupati Banerjee, Assistant Engineer, was allowed, under rule 81 (*d*) of the Fundamental Rules, an extension of leave on half average pay for sixteen days, with effect from the 23rd December 1934.

J. D. V. HODGE,
Secy. to the Govt. of Bengal.

IRRIGATION DEPARTMENT.

Establishment.

NOTIFICATIONS.

No. 3-C.I.E.—24th January 1935.—Babu Jogesh Chandra Dutta Gupta, Assistant Engineer, is granted leave on average pay for four months, under rule 81 (*b*) (*ii*) of the Fundamental Rules, with effect from the 4th March 1935, or any subsequent date.

No. 4-C.I.E.—26th January 1935. — Babu Bhuban Mohan Mukherji, Assistant Engineer, is granted leave on average pay for four months, under rule 81 (*b*) (*ii*) of the Fundamental Rules, with effect from the 1st February 1935, or any subsequent date.

T. A. CURRY, *Chief Engineer.*

DEPARTMENT OF AGRICULTURE AND INDUSTRIES.

Forests.

Orders by the Conservator of Forests, Bengal.

Buxa.—No. 956For.—24th January 1935. —Mr. J. C. Nath, Deputy Conservator of Forests, is granted leave on average pay for thirty days, under rule 81 (*b*) (*ii*) of the Fundamental and Subsidiary Rules, with effect from the 2nd January 1935, with permission to affix Sunday, the 23rd December 1934 and the Christmas and the New Year's Day holidays to the leave.

E. O. SHEBBEARE,
Conservator of Forests, Bengal.

Orders by the Registrar of Co-operative Societies, Bengal.

No. 45-L.—23rd January 1935.—Whereas I am of opinion, as the result of an enquiry held into the constitution, working and financial condition of the Char Nimtali Joutha Bank (registered No. 170D of 1925), in the subdivision Munshiganj in the district of Dacca, under sub-section (*1*) of section 35 of the Co-operative Societies Act, II of 1912, that the society ought to be dissolved.

Now, therefore, in exercise of the power conferred by sub-section (*1*) of section 39 of the same Act, I hereby cancel the registration of the said society.

And further, in exercise of the power conferred by sub-section (*1*) of section 42 of the same Act, I hereby appoint the Departmental Officer in charge of Co-operative Societies, Munshiganj, to be liquidator of the said society.

No. 46-L.—23rd January 1935.—Whereas I am of opinion, as the result of an enquiry held into the constitution, working and financial condition of the Balla Purbapara Tantubai Samity (registered No. 113 of 1927), in the subdivision Tangail in the district of Mymensingh under sub-section (*1*) of section 35 of the Co-operative Societies Act, II of 1912, that the society ought to be dissolved.

Now, therefore, in exercise of the power conferred by sub-section (*1*) of section 39 of the same Act, I hereby cancel the registration of the said society.

And further, in exercise of the power conferred by sub-section (*1*) of section 42 of the same Act, I hereby appoint the Inspector of Co-operative Societies, Tangail, to be liquidator of the said society.

No. 47-L.—23rd January 1935.—Whereas I am of opinion, as the result of an enquiry held into the constitution, working and financial condition of the Doukadi Co-operative Bank (registered No. 423 of 1926), in the subdivision Narayanganj in the district of Dacca, under sub-section (*1*) of section 35 of the Co-operative Societies Act, II of 1912, that the society ought to be dissolved.

Now, therefore, in exercise of the power conferred by sub-section (*1*) of section 39 of the same Act, I hereby cancel the registration of the said society.

And further, in exercise of the power conferred by sub-section (*1*) of section 42 of the same Act, I hereby appoint the Inspector of Co-operative Societies, Narayanganj, to be liquidator of the said society.

No. 48-L.—23rd January 1935.—Whereas I am of opinion, as the result of an enquiry held into the constitution, working and financial condition of the Ghatbhog Samabaya Samity (registered No. 144 of 1923), in the subdivision Sadar in the district of Khulna, under sub-section (*1*) of section 35 of the Co-operative Societies Act, II of 1912, that the society ought to be dissolved.

Now, therefore, in exercise of the power conferred by sub-section (*1*) of section 39 of the same Act, I hereby cancel the registration of the said society.

And further, in exercise of the power conferred by sub-section (*1*) of section 42 of the same Act, I hereby appoint the Departmental Officer in charge of Co-operative Societies, Khulna, to be liquidator of the said society.

No. 49-L.—23rd January 1935.—Whereas I am of opinion, as the result of an enquiry held into the constitution, working and financial condition of the Govindapur Samabaya Samity (registered No. 86 of 1926), in the subdivision Diamond Harbour in the district of 24-Parganas, under sub-section (*1*) of section 35 of the Co-operative Societies Act, II of 1912, that the society ought to be dissolved.

Now, therefore, in exercise of the power conferred by sub-section (*1*) of section 39 of the same Act, I hereby cancel the registration of the said society.

And further, in exercise of the power conferred by sub-section (*1*) of section 42 of the same Act, I hereby appoint the Departmental Officer in charge of Co-operative Societies, Diamond Harbour, to be liquidator of the said society.

No. 50-L.—23rd January 1935.—Whereas I am of opinion, as the result of an enquiry held into the constitution, working and financial condition of the Muksudpur Standard Co-operative Urban Bank, Limited (registered No. 9 of 1910), in the subdivision Gopalganj in the district of Faridpur, under sub-section (*1*) of section 35 of the Co-operative Societies Act, II of 1912, that the society ought to be dissolved.

Now, therefore, in exercise of the power conferred by sub-section (*1*) of section 39 of the same Act, I hereby cancel the registration of the said society.

And further, in exercise of the power conferred by sub-section (*1*) of section 42 of the same Act, I hereby appoint the Inspector of Co-operative Societies, Gopalganj, to be liquidator of the said society.

No. 51-L.—23rd January 1935.—Whereas I am of opinion, as the result of an enquiry held into the constitution, working and financial condition of the Kathalia Samabaya Samity (registered No. 349 of 1926), in the subdivision Sadar in the district of Bakarganj, under sub-section (*1*) of section 35 of the Co-operative Societies Act, II of 1912, that the society ought to be dissolved.

Now, therefore, in exercise of the power conferred by sub-section (*1*) of section 39 of the same Act, I hereby cancel the registration of the said society.

And further, in exercise of the power conferred by sub-section (*1*) of section 42 of the same Act, I hereby appoint the Inspector of Co-operative Societies, Barisal, to be liquidator of the said society.

No. 52-L.—23rd January 1935.—Whereas I am of opinion, as the result of an enquiry held into the constitution, working and financial condition of the Panchgaon Samabaya Samity (registered No. 186 of 1926), in the subdivision Diamond Harbour in the district of 24-Parganas, under sub-section (*1*) of section 35 of the Co-operative Societies Act, II of 1912, that the society ought to be dissolved.

Now, therefore, in exercise of the power conferred by sub-section (*1*) of section 39 of the same Act, I hereby cancel the registration of the said society.

And further, in exercise of the power conferred by sub-section (*1*) of section 42 of the same Act, I hereby appoint the Departmental Officer in charge of Co-operative Societies, Diamond Harbour, to be liquidator of the said society.

No. 53-L.—23rd January 1935.—Whereas I am of opinion, as the result of an enquiry held into the constitution, working and financial condition of the Sumardhaliakandi Joutha Bank (registered No. 108D of 1921), in the subdivision Munshiganj in the district of Dacca, under sub-section (*1*) of section 35 of the Co-operative Societies Act, II of 1912, that the society ought to be dissolved.

Now, therefore, in exercise of the power conferred by sub-section (*1*) of section 39 of the same Act, I hereby cancel the registration of the said society.

And further, in exercise of the power conferred by sub-section (*1*) of section 42 of the same Act, I hereby appoint the Departmental Officer in charge of Co-operative Societies, Munshiganj, to be liquidator of the said society.

No. 54-L.—23rd January 1935.—Whereas I am of opinion, as the result of an enquiry held into the constitution, working and financial condition of the Alinagar Moslem Bank No. III (registered No. 20 of 1912-13), in the subdivision Kishoreganj in the district of Mymensingh, under sub-section (*1*) of section 35 of the Co-operative Societies Act, II of 1912, that the society ought to be dissolved.

Now, therefore, in exercise of the power conferred by sub-section (*1*) of section 39 of the same Act, I hereby cancel the registration of the said society.

And further, in exercise of the power conferred by sub-section (*1*) of section 42 of the same Act, I hereby appoint the Departmental Officer in charge of Co-operative Societies, Kishoreganj, to be liquidator of the said society.

No. 55-L.—23rd January 1935.—Whereas I am of opinion, as the result of an enquiry held into the constitution, working and financial condition of the Enayetnagar Gramya Dharma Bhandar (registered No. 25 of 1907), in the subdivision Madaripur in the district of Faridpur, under sub-section (*1*) of section 35 of the Co-operative Societies Act, II of 1912, that the society ought to be dissolved.

Now, therefore, in exercise of the power conferred by sub-section (*1*) of section 39 of the same Act, I hereby cancel the registration of the said society.

And further, in exercise of the power conferred by sub-section (*1*) of section 42 of the same Act, I hereby appoint the Departmental Officer in charge of Co-operative Societies, Madaripur, to be liquidator of the said society.

A. M. ARSHADALI,

Regr., Co-operative Societies, Bengal (offg.).

REVENUE DEPARTMENT.

Land Revenue.

NOTIFICATIONS.

Malda.—No. 1587L.R.—25th January 1935.—Babu Purnendunath Guha, Sub-Deputy Collector and Assistant Settlement Officer, Malda, is allowed leave on average pay for four days, with effect from the 2nd January 1935, under rule 81 (*b*) (*ii*) of the Fundamental Rules.

Chittagong.—No. 1591L.R.—25th January 1935.—Maulvi Muhammad Obaidul Kader, Sub-Deputy Collector, Chittagong, is appointed as Khas Tahsildar, Sadar Circle of that district, until further orders.

CORRIGENDUM.

No. 1463L.R.—23rd January 1935.—In notifications Nos. 13031L.R. and 13033L.R., dated the 13th November 1933, *insert* the words "Non-Mokarari and non-rent-free only" after Dosra Bhagwanpur in serial 19.

Land Acquisition.

NOTIFICATIONS.

Burdwan. — No. 1376L.A.—22nd January 1935.—Whereas it appears to the Governor in Council that land is likely to be required to be taken by Government at the public expense for a public purpose, viz., for constructing the approaches of the bridge at mile 14 chainage 40 of Distributary No. 6, Main Canal, Damodar Canal Project, in the village of Bakalsa, jurisdiction list No. 128, thana Burdwan, pargana Shahabad, district Burdwan, it is hereby notified that for the above purpose two pieces of land comprising parts of cadastral survey plots Nos. 159-161 and altogether measuring, more or less, 0·28 of an acre, are likely to be required within the aforesaid village of Bakalsa.

This notification is made, under the provisions of section 4 of Act I of 1894, to all whom it may concern.

A plan of the land may be inspected in the office of the Special Land Acquisition Officer, Burdwan, as well as in that of the Executive Engineer, Damodar Canal Division, Burdwan.

In exercise of the powers conferred by the aforesaid section, the Governor in Council is pleased to authorise the officers for the time being engaged in the undertaking, with their servants and workmen, to enter upon and survey the land and do all other acts required or permitted by that section.

In exercise of the powers conferred by section 17 (*4*) of the Land Acquisition Act, I of 1894, as amended by Act XXXVIII of 1923, the Governor in Council is pleased to direct that the provisions of section 5A of the Act shall not apply in this case.

Hooghly. — No. 1457L.A.—23rd January 1935.—Whereas it appears to the Governor in Council that land is likely to be required to be taken by Government at the expense of the Calcutta Electric Supply Corporation, Limited, for the Bhadreswar Electrification Scheme, in the village of Paikpara, jurisdiction list No. 5, thana Serampore, pargana Boro, district Hooghly, it is hereby notified that for the above purpose a piece of land comprising cadastral plot No. 230 (partly) and measuring, more or less, 0·165 of an acre, bounded on the—

North and East—By land of Jitendra Nath Banerjee and Hriday Chandra Banerjee,

South—By Raj Kissen Charitable Dispensary,

West—By Grand Trunk Road,

is likely to be required within the aforesaid village of Paikpara.

This notification is made, under the provisions of section 4 of Act I of 1894, to all whom it may concern.

A plan of the land may be inspected in the office of the Land Acquisition Officer, Serampore.

In exercise of the powers conferred by the aforesaid section, the Governor in Council is pleased to authorise the officers for the time being engaged in the undertaking, with their servants and workmen, to enter upon and survey the land and do all other acts required or permitted by that section.

Any person interested in the above land, who has any objection to the acquisition thereof, may, within thirty days after the date on which public notice of the substance of this notification is given in the locality, file an objection in writing before the Collector of Hooghly.

Midnapore.—No. 1641L.A.—26th January 1935.—Mr. Alfred George Allison, Subdivisional Officer, Contai, in the district of Midnapore, is vested with the powers of a Collector under the Land Acquisition Act, I of 1894, in that subdivision.

Pabna.—No. 1670L.A. — 28th January 1935.—Whereas it appears to the Governor in Council that land is likely to be required to be taken by Government at the public expense for a public purpose, viz., for widening the Pabna-Ishurdi Road at 7th mile in the village of Majidpur, jurisdiction list No. 55, thana Pabna, pargana Bajuras Nazirpur, district Pabna, it is hereby notified that for the above purpose a piece of land comprising parts of cadastral plot Nos. 680, 901, 683, 684, 686, 688 and 689, and measuring, more or less, 0·654 of an acre, is likely to be required within the aforesaid village of Majidpur.

This notification is made, under the provisions of section 4 of Act I of 1894, to all whom it may concern.

A plan of the land may be inspected in the office of the Collector of Pabna.

In exercise of the powers conferred by the aforesaid section, the Governor in Council is pleased to authorise the officers for the time being engaged in the undertaking, with their servants and workmen, to enter upon and survey the land and do all other acts required or permitted by that section.

In exercise of the powers conferred by section 17(*4*) of the Land Acquisition Act, I of 1894, as amended by Act XXXVIII of 1923, the Governor in Council is pleased to direct, that the provisions of section 5A of the Act shall not apply in this case.

Tippera.—No. 1673L.A. — 28th January 1935.—Whereas it appears to the Governor in Council that land is likely to be required to be taken by Government at the public expense for a public purpose, viz., for the accommodation of the sub-registry office at Hajiganj, in the village of Makimabad, jurisdiction list No. 213, thana Hajiganj, pargana Tora, district Tippera, it is hereby notified that for the above purpose a piece of land comprising cadastral plot Nos. 847 and 848, and measuring, more or less, 2·95 acres, is likely to be required within the aforesaid village of Makimabad.

This notification is made, under the provisions of section 4 of Act I of 1894, to all whom it may concern.

A plan of the land may be inspected in the office of the Subdivisional Officer of Chandpur.

In exercise of the powers conferred by the aforesaid section, the Governor in Council is pleased to authorise the officers for the time being engaged in the undertaking, with their servants and workmen, to enter upon and survey the land and do all other acts required or permitted by that section.

Any person interested in the above land, who has any objection to the acquisition thereof, may, within thirty days after the date on which public notice of the substance of this notification is given in the locality, file an objection in writing before the Collector of Tippera.

ERRATA.

Tippera. — No. 1460L.A.—23rd January 1935.—In line 15 of the notification No. 9188-L.A., dated 18th August 1934, published at page 1214, Part I of the *Calcutta Gazette* of the 23rd idem, in respect of the proposed acquisition of land required by the Chandpur Municipality, for the construction of a public latrine at Nutan Bazar in the village of Bishnudi, district Tippera, *read* "·1768 of an acre" *instead* of "0·151 of an acre."

Calcutta.—No. 1664L.A. — 28th January 1935.—In line 4 of notification No. 13447L.A., dated the 17th December 1934, published at page 1972, Part I of the *Calcutta Gazette* of the 20th idem, in respect of the acquisition of land required to be taken by Government for the extension of Gopal Chandra Lane eastward to meet Chittaranjan Avenue in ward No. 8 of the Calcutta Municipality in the city of Calcutta *for* the words "public expense" *read* "expense of the Corporation of Calcutta."

DECLARATIONS.

Burdwan. — No. 1445L.A.—23rd January 1935.—Whereas it appears to the Governor in Council that land is required to be taken by Government at the public expense for a public purpose, viz., for constructing a road from Grand Trunk Road near Panagar station to the headworks at Randiha of the Damodar Canal Project, in the village of Kanksa, jurisdiction list No. 86, thana Kanksa, pargana Selampur, district Burdwan, it is hereby declared that for the above purpose two pieces of land, comprising parts of cadastral survey plot Nos. 2236, 3499 and 3500, and altogether measuring, more or less, 0·45 of an acre, are required within the aforesaid village of Kanksa.

Mines of coal, iron-stone, slate or other minerals lying under the land or any particular portion of the land, except only such parts of the mines and minerals as it may be

necessary to dig, or carry away, or use, in the construction of the work for the purpose of which the land is being acquired are not needed.

This declaration is made, under the provisions of section 6 of Act I of 1894, and section 3, clause (*l*), Act XVIII of 1885, to all whom it may concern.

A plan of the land may be inspected in the office of the Special Land Acquisition Officer, Burdwan, as well as in that of the Executive Engineer, Damodar Canal Division, Burdwan.

Howrah. — No. 1594L.A.—25th January 1935.—Whereas it appears to the Governor in Council that land is required to be taken by Government at the expense of the Howrah Municipality, for a public purpose, viz., for easing out the bad corner at the junction of Jeliapara Lane and Ramlal Mukherjee Lane, in the village of Salkia, pargana Paikan, zilla Howrah, it is hereby declared that for the above purpose a piece of land measuring, more or less, 0·0044 of an acre, bounded on the—

North—By Jeliapara Lane,

East and South—By lands of Purna Chandra Banerjee,

West—By Ram Lal Mukherjee Lane,

is required within the aforesaid village of Salkia.

This declaration is made, under the provisions of section 6 of Act I of 1894, to all whom it may concern.

A plan of the land may be inspected in the office of the Collector of Howrah.

Burdwan. — No. 1597L.A.—25th January 1935.—Whereas it appears to the Governor in Council that land is required to be taken by Government at the public expense for a public purpose, viz., for constructing Distributary No. 6L of the main canal, from its source to mile 5, chainage 13 and 59 feet, Damodar Canal Project, in the village of Mandalgram, jurisdiction list No. 7, in thana Memari and in the villages of Mulgram, Ujna, Kusumgram and Tajpur, jurisdiction list Nos. 25, 27, 71 and 31, respectively, in thana Manteswar, parganas Shahabad and Satsaika, district Burdwan, it is hereby declared that for the above purpose seven pieces of land, comprising parts of cadastral survey plots Nos. 4239, 4240, 4569, 4572, 4578, 4579, 4582, 4583, 4632, 4633, 4635, 4636, 4667, 4670-4673, 4703, 4704, 4707, 4708, 4711, 4714, 4722-4724, 4770, 4775-4777, 4784, 4785, 4796-4798, 4806, 4807, 4820, 6080, 6081, 6091-6093, 6174-6176, 6192-6194, 6201-6203, 6270, 6277-6279, 6295-6300, 6302-6307, 6320, 6324-6326, 6332-6334, 6336-6339, 6383-6388, 6401-6403, 6406-6409, 6415, 7071, 7075-7081, 7083, 7465, 7472, 8588, 8589, 8591, 8592, 9194-9196, 9235-9238, 9240-9243, 9353, 9355-9357, 9360-9363, 9368, 9369, 9371, 9474, 9481-9483, 9485-9488, 9490, 9491, 9508, 9511-9514, 9516, 9517 and 9524 in mauza Mandalgram, parts of cadastral survey plot Nos. 5118, 5119, 5128-5134, 5156, 5157, 5159-5163, 5167-5169, 5175-5177, 5223, 5224, 5231, 5232, 5234-5236, 5239, 5271, 5392-5395, 5397-5402, 5406, 5409, 5411, 5416-5418, 5421, 5530, 5549-5551, 5719, 5720, 5728-5730, 5732-5734, 5738, 5739, 5741, 5742, 5747-5750, 5892 and 5893 in mauza Mulgram, parts of cadastral survey plot Nos. 718-722, 799-803, 806, 821-823, 825, 826, 831, 833-835, 845, 846, 849, 991, 994, 995, 1002, 1010-1012, 1235, 1239, 1240, 1269, 1270, 1272, 1276, 1277, 1279-1282, 1288, 1334-1336, 1338-1340, 1345, 1355-1359, 1398-1400, 1471, 1476-1478 in mauza Ujna, parts of cadastral survey plot Nos. 369-372, 398, 400, 401, 474, 476, 477, 489, 490, 493, 494, 749, 3003, 3005, 3017, 3021, 3026-3028, 3128, 3129, 3153-3156, 3158, 3159, 3163, 3173, 3175-3177 and 3188-3191 in mauza Kusumgram and parts of cadastral survey plot Nos. 459, 461-464, 468, 1092, 1094, 1096-1098, 1140-1142, 1146, 1149, 1155, 1158, 1160 and 1164-1166 in mauza Tajpur, and altogether measuring, more or less, 28·52 acres, are required within the aforesaid villages of Mandalgram, Mulgram, Ujna, Kusumgram and Tajpur.

This declaration is made, under the provisions of section 6 of Act I of 1894, to all whom it may concern.

A plan of the land may be inspected in the office of the Special Land Acquisition Officer, Burdwan, as well as in that of the Executive Engineer, Damodar Canal Division, Burdwan.

24-Parganas.—No. 1667L.A.—28th January 1935.—Whereas it appears to the Governor in Council that land is required to be taken by Government at the expense of district board, 24-Parganas, for a public purpose, viz., for the construction of dispensary building, in the village of Malangapara, jurisdiction list No. 37, thana Swarupnagar, pargana Kalaroa-Hosseinpur, district 24-Parganas, it is hereby declared that for the above purpose a piece of land comprising cadastral plot Nos. 309 and 310, measuring, more or less, 0·6170 of an acre, is required within the aforesaid village of Malangapara.

This declaration is made, under the provisions of section 6 of Act I of 1894, to all whom it may concern.

A plan of the land may be inspected in the office of the District Engineer, 24-Parganas, as well as in that of the Collector of the 24-Parganas.

ERRATUM.

Calcutta. — No. 1454L.A.—23rd January 1935.—In line 11 of declaration No. 14875-L.A., dated the 19th December 1932, published at page 2063, Part I of the *Calcutta Gazette* of the 23rd idem, in respect of the land required by the Calcutta Improvement Trust for Alignment No. VII in Ward No. II of the Calcutta Municipality in the city of Calcutta, *for* the figure "5 cottahs" *read* "5 cottahs and 12 chittacks" and in line 12 *for* the figure "·0826 of an acre" *read* "·0950 of an acre."

Jurisdiction.

NOTIFICATIONS.

Rangpur. — No. 1372Jur. — 31st January 1935.—In exercise of the power conferred by sub-section (*1*) of section 8 of the Code of Criminal Procedure, 1898 (Act V of 1898), and in supersession of all previous notifications relating to the area included within the Sadar subdivision of the Rangpur district and to the boundaries of that area, the Governor in Council is pleased to declare that the limits of that subdivision shall include the local areas of the following police-stations:—

Police-station Rangpur—Notifications No. 11271P., dated the 7th September 1916, and No. 999P.J., dated the 7th March 1918.

Police-station Gangachara—Notification No. 705P., dated the 22nd January 1914.

Police-station Kaliganj—Notifications No. 8029P., dated the 18th November 1913, and Nos. 3215P. and 3216P., dated the 12th March 1915.

Police-station Hatibandha—Notifications No. 8030P., dated the 18th November 1913, Nos. 3215P. and 3216P., dated the 12th March 1915, Nos. 3946Pl. and 3950Pl., dated the 9th August 1928, and Nos. 314Pl. and 318-Pl., dated the 31st January 1935.

Police-station Pirgacha—Notifications No. 11272P., dated the 7th September 1916, No. 999P.J., dated the 7th March 1918, and No. 4302Pl., dated the 16th August 1934.

Police-station Kaunia—Notifications No. 11273P., dated the 7th September 1916, No. 3456Pl., dated the 13th July 1926, and No. 4302Pl., dated the 16th August 1934.

Police-station Badarganj—Notification, dated the 23rd February 1875.

Police-station Pirganj—Notification, dated the 23rd February 1875.

Police-station Mitapokhar—Notification, dated the 23rd February 1875.

Rangpur. — No. 1373Jur.—22nd January 1935.—In exercise of the power conferred by sub-section (*1*) of section 8 of the Code of Criminal Procedure, 1898 (Act V of 1898), and in supersession of all previous notifications relating to the area included within the Nilphamari subdivision of the Rangpur district and to the boundaries of that area, the Governor in Council is pleased to declare that the limits of that subdivision shall include the local areas of the following police-stations:—

Police-station Nilphamari—Notification, dated the 7th July 1884, published at page 181, Part I of the *Calcutta Gazette*, dated the 16th July 1884, notification, dated the 1st October 1884, published at page 1015, Part I of the *Calcutta Gazette*, dated the 1st October 1884, notification No. 429Pl., dated the 30th January 1924, Nos. 3947Pl. and 3948Pl., dated the 9th August 1928, No. 3033Pl., dated the 1st August 1929, and No. 319Pl., dated the 31st January 1935.

Police-station Saidpur—Notifications No. 15Pl., dated the 4th January 1922, No. 3948-Pl., dated the 9th August 1928, and Nos. 315-Pl., 316Pl. and 317Pl., dated the 31st January 1935.

Police-station Dimla—Notifications, dated the 23rd February 1875, and Nos. 3949Pl., and 3950Pl., dated the 9th August 1928.

Police-station Domar—Notification No. 16-Pl., dated the 4th January 1922.

Police-station Jaldhaka—Notifications No. 4241P., dated the 21st April 1914, and Nos. 3945Pl., 3946Pl. and 3949Pl., dated the 9th August 1928.

Police-station Kishoreganj—Notifications No. 4242P., dated the 21st April 1914, Nos. 3945Pl. and 3947Pl., dated the 9th August 1928, and No. 3033Pl., dated the 1st August 1929.

Jalpaiguri.—No. 1374Jur.—22nd January 1935.—In exercise of the power conferred by sub-section (*1*) of section 8 of the Code of Criminal Procedure, 1898 (Act V of 1898), and in supersession of all previous notifications relating to the area included within the Sadar subdivision of the Jalpaiguri district and to the boundaries of that area, the Governor in Council is pleased to declare that the limits of that subdivision shall include the local areas of the following police-stations:—

Police-station Jalpaiguri—Notification, dated the 1st September 1883 published in Part I, page 177 of the *Calcutta Gazette*, dated the 9th January 1884.

Police-station Boda—Notification No. 2805-Pl., dated the 28th July 1925.

Police-station Pachagar—Notification No. 2806Pl., dated the 28th July 1925.

Police-station Debiganj—Notifications No. 2807Pl., dated the 28th July 1925, and No. 319Pl., dated the 31st January 1935.

Police-station Rajganj—Notifications No. 1331Pl., dated the 18th April 1923, and No. 711Pl., dated the 27th February 1925.

Police-station Tetulia—Notifications No. 1330Pl., dated the 18th April 1923, and No. 711Pl., dated the 27th February 1925.

Police-station Pathgram—Notifications No. 1167Pl., dated the 2nd April 1925, and Nos. 314Pl. and 318Pl., dated the 31st January 1935.

Police-station Maynaguri—Notification, dated the 1st September 1883.

Police-station Nagrakata—Notification No. 3222J., dated the 11th July 1905.

Police-station Dhubguri—Notification No. 3222J., dated the 11th July 1905.

Police-station Mal—Notifications No. 4647-J., dated the 27th December 1909, and No. 2911Pl., dated the 21st November 1924.

Police-station Mitiali—Notification No. 3222J., dated the 11th July 1905.

Dinajpur. — No. 1375Jur.—22nd January 1935.—In exercise of the power conferred by sub-section (*1*) of section 8 of the Code of Criminal Procedure, 1898 (Act V of 1898), and in supersession of all previous notifications relating to the area included within the Sadar subdivision of the Dinajpur district and to the boundaries of that area, the Governor in Council is pleased to declare that the limits of that subdivision shall include the local areas of the following police-stations:—

Police-station Dinajpur—Notification No. 11099P., dated the 20th September 1915.
Police-station Chirirbandar—Notifications No. 11100P., dated the 29th September 1915, and No. 316Pl., dated the 31st January 1935.
Police-station Biral—Notification No. 11101-P., dated the 20th September 1915.
Police-station Parbatipur—Notifications, dated the 6th November 1874, and Nos. 315-Pl. and 317Pl., dated the 31st January 1935.
Police-station Nawabganj—Notification No. 3170P., dated the 6th March 1916.
Police-station Ghoraghat—Notifications No. 3169P., dated the 6th March 1916, and No. 3436Pl., dated the 12th December 1923.
Police-station Kaliaganj—Notifications No. 3166P., dated the 6th March 1916, and No. 4509Pl., dated the 23rd August 1934.
Police-station Itahar—Notifications No. 3165P., dated the 6th March 1916, No. 4231Pl., dated the 10th August 1933, and No. 4509Pl., dated the 23rd August 1934.
Police-station Raiganj—Notification No. 3168P., dated the 6th March 1916.
Police-station Hemtabad—Notification No. 3167P., dated the 6th March 1916.
Police-station Bangshihari—Notification No. 2809P., dated the 16th March 1914.
Police-station Kushmundi—Notification No. 2810P., dated the 16th March 1914.

O. M. MARTIN,
Secy. to the Govt. of Bengal.

BENGAL LEGISLATIVE COUNCIL DEPARTMENT.

NOTIFICATION.

No. 567L.C.—23rd January, 1935.—It is hereby notified in pursuance of rule 14 (*9*) of the Bengal Electoral Rules that Mr. G. W. Leeson has been declared under rule 14 (*2*) of the aforesaid Rules to have been duly elected by the Bengal Chamber of Commerce constituency to be a member of the Bengal Legislative Council.

J. W. McKAY,
Secy. to the Bengal Legis. Council.

TREASURY NOTICES.

Noakhali, the 22nd January 1935.

Deputy Collector Babu Praphulla Chandra Ghosh has been placed in charge of the Noakhali Treasury with effect from the afternoon of the 22nd January 1935, and authorised to draw bills on other treasuries.

A. WHITTAKER, *Collector.*

Orders by the Deputy Accountant-General, Bengal.

The Treasury, the 21st January 1935.

It is notified that the refund order No. 3886 containing 50 orders is in use by the Income Tax Office, Central Salaries Circle, Calcutta, with effect from the 12th January 1935.

The Treasury, the 25th January 1935.

It is notified that the refund order No. 845 containing 50 orders "Pink" is in use by the Income-tax Office, Railway and Miscellaneous Salaries Circle, Calcutta, with effect from the 17th January 1935.

A. R. REBELLO,
Dy. Accountant-General, Bengal.

SHERIFF'S OFFICE.

The 17th January 1935.

Notice is hereby given that the First Criminal Sessions of the year 1935 of the High Court of Judicature at Fort William in Bengal for the town of Calcutta and factory of Fort William and the places subordinate thereto, will be held at the Court House, in the town of Calcutta, on Monday, the 18th day of February next, at 11 o'clock in the forenoon, and thenceforward from day to day until the said sessions be over. And it is hereby proclaimed that all persons who are to prosecute any of the prisoners to be brought up for trial at the said sessions be present then and there to prosecute.

A. H. GHUZNAVI, *Sheriff.*

শরিফ আফিস, সন ১৯৩৫ সালের ১৭ই জানুয়ারী।

সকলকে সমাচার দেওয়া যাইতেছে যে, সুবে বাঙ্গালার ফোর্ট উইলিয়ম দুর্গের অধীনে সহর কলিকাতার ও অন্যান্য স্থানের ফৌজদারী বিচার নিষ্পত্তি জন্য আগামী সন ১৯৩৫ সালের ১৮ই ফেব্রুয়ারী সোমবার বেলা ১১ ঘটিকার সময় এবং যে পর্য্যন্ত সেসিয়নের কার্য্য সমাধা না হয়, প্রতিদিন উক্ত সময়ে কলিকাতার হাইকোর্টের আপন আদালত ঘরে সন ১৯৩৫ সালের প্রথম ক্রিমিন্যাল সেসিয়ন বসিবেক, এবং এতদ্বারা প্রচার করা যাইতেছে যে, যে সকল ব্যক্তি কোন কয়েদীর বিরুদ্ধে কোন ফৌজদারী মিছিল করিবেক, তাহারা উক্ত স্থানে উক্ত সময়ে হাজির থাকিয়া মোকদ্দমা করে। ইতি।

এ, এইচ, গজনাভি,
শরিফ।

HIGH COURT NOTICES.

Civil.

The 22nd January 1935.

No. 1385E.—The following rule amending the rules relating to qualifications, admission and certificates, etc., of pleaders and mukhtars in courts subordinate to the High Court of Judicature at Fort William in Bengal, under section 6 of the Legal Practitioners Act, 1879 (XVIII of 1879), is published for general information:—

RULE No. OF 1935.

(CIVIL.)

1. *Substitute* the words and figures "rules 26 and" for the word "rule" in line 1 of Rule 29 (slip), Chapter XI (revised), Volume I of the Court's General Rules and Circular Orders, Civil.

2. *Substitute* the words and figures "Rules 26 and 27 as they" for the words and figures "Rule 27 as it" in line 2 of the Note to Rule 29 *ibid.*

The 25th January 1935.

No. 1786A.—Babu Janardan Prasad Mukharji, munsif of Ranaghat, in the district of Nadia, is vested with the powers of a Judge of a Court of Small Causes for the trial of suits cognizable by such a Court up to the value of Rs. 100 within the local limits of the Ranaghat munsifi.

No. 1789A.—In exercise of the powers delegated to the High Court by the notification of the Government of Bengal, No. 64J.D., dated the 30th April 1915, Babu Janardan Prasad Mukharji, munsif of Ranaghat, in the district of Nadia, is vested, under article 8 of the Second Schedule of the Provincial Small Cause Courts Act, 1887 (IX of 1887), with powers to try, under the Small Cause Court procedure, suits up to the value of Rs. 100 for the recovery of rents of homestead lands arising within the municipal area within his jurisdiction.

English Department.

The 26th January 1935.

No. 1854G.—The following rules making amendments to the Rules in the First Schedule to the Code of Civil Procedure, 1908, having been framed by the High Court of Judicature at Fort William in Bengal, in exercise of the power vested in it by section 122 of the Code, and sanctioned by the Governor-General in Council under section 126 of the Code, are published for general information.

The rules will come into force with effect from the 1st March 1935:—

Rules.

Add the following after Rule 46, Order XXI:—

46 (A).—The Court may in case of a debt, other than a debt secured by a mortgage or a charge or by a negotiable instrument, which has been attached under rule 46 or 51 of this order, upon the application of the attaching creditor, issue notice to the garnishee liable to pay such debt calling upon him either to pay into Court the debt due from him to the judgment-debtor or so much thereof as may be sufficient to satisfy the decree and costs of execution, or to appear and show cause why he should not do so.

Provided that if the debt in respect of which the application aforesaid is made is in respect of a sum of money beyond the pecuniary jurisdiction of the Court, the Court shall send the execution case to the Court of the District Judge to which the said Court is subordinate, and thereupon the Court of the District Judge or any other competent Court to which it may be transferred by the District Judge will deal with it in the same manner as if the case had been originally instituted in that Court.

Such application shall be made on affidavit verifying the facts alleged and stating that in the belief of the deponent the garnishee is indebted to the judgment-debtor.

46 (B).—Where the garnishee does not forthwith pay into Court the amount due from him to the judgment-debtor or so much thereof as is sufficient to satisfy the decree and the costs of execution or does not appear and show cause in answer to the notice, the Court may order the garnishee to comply with the terms of such notice, and on such order execution may issue as though such order were a decree against him.

46 (C).—Where the garnishee disputes liability, the Court may order that any issue or question necessary for the determination of liability shall be tried as if it were an issue in a suit, and upon the determination of such issue shall make such order or orders upon the parties as may seem just.

46 (D).—Where it is suggested or appears to be probable that the debt belongs to some third person or that any third person has a lien or charge on, or other interest in, such debt, the Court may order such third person to appear and state the nature and particulars of his claim (if any) to such debt and prove the same.

46 (E).—After hearing such third person and any other person or persons who may subsequently be ordered to appear, or where such third or other person or persons do not appear when so ordered, the Court may make such order as is hereinbefore provided, or such other order or orders upon such terms, if any, with respect to the lien, charge or interest if any of such third or other person as may seem fit and proper.

46 (F).—Payment made by the garnishee on a notice under rule 46 (A) or under any such order as aforesaid shall be valid discharge to him as against the judgment-debtor and any other person ordered to appear as aforesaid for the amount paid or levied although such judgment may be set aside or reversed.

46 (G).—The costs of any application made under rule 46 (A) and of any proceeding arising therefrom or incidental thereto, shall be in the discretion of the Court.

46 (H).—An order made under rules 46 (B), 46 (C) or 46 (E) shall be appealable as a decree.

By order of the High Court,

N. L. HIMLEY, *Registrar.*

ORDERS BY COMMISSIONERS OF DIVISIONS.

Burdwan Division—Chinsura.

No. 51L.S.-G.—12th January 1935.—It is hereby notified for general information that, in exercise of the powers conferred by rule 19 of the Election Rules under the Local Self-Government Act, the undersigned determines that the number of members to be elected from the Special Constituency, and each existing thana of the General Constituency, of the Arambagh local board in the district of Hooghly will be as shown below against each :—

I.—Special Constituency.

Name of local board.	Thana.	Grouping of unions where necessary.	Number of seats reserved for the minority community.
Arambagh local board, Hooghly.	Arambagh ..	All the unions,	1
	Goghat ..	All the unions	
	Khanakul ..	All the unions	1
	Pursurah ..	All the unions	

II.—General Constituency.

Name of local board.	Thana.	Grouping of unions where necessary.	Number of seats to which members are to be elected.
Arambagh local board, Hooghly.	Arambagh ..	Tirole Batanal Moloypur	1
	Arambagh ..	Horinkhola Mayapur Arandi	1
	Arambagh ..	Madhabpur Shalepur Gourhati	1
	Goghat ..	Bengai Kumergunj Raghubati Bhadur	1
	Goghat ..	Goghat Kamarpukur Mandaran Hazipur	1
	Goghat ..	Kumursha Bali Saora Nakunda	1
	Goghat ..	Badangunje Fului Shambazar Paschimpara	1
	Khanakul ..	Kishorepur Ghoshpore Pole	1
	Khanakul ..	Atghora Balipur Chinghra	1
	Khanakul ..	Khanakul Rajhati	1
	Khanakul ..	Thakuranichak. Jogatpur	1
	Khanakul ..	Sabalsingpur Natibpur	1
	Pursurah ..	Bhangamora Dihibatpur	1
	Pursurah ..	Pursurah Shampore	1

No. 52L.S.-G.—12th January 1935.—It is hereby notified for general information that, in exercise of the powers conferred by rule 19 of the Election Rules under the Local Self-Government Act, the undersigned determines that the number of members to be elected from the Special Constituency, and each existing thana of the General Constituency, of the Serampore local board in the district of Hooghly will be as shown below against each :—

I.—Special Constituency.

Name of local board.	Thana.	Grouping of unions where necessary.	Number of seats reserved for the minority community.
Serampore local board, Hooghly.	Tarakeswar..	All the unions	1
	Jangipara ..	All the unions	
	Haripal ..	Dwarhatta Gopinathpur	
	Chanditola ..	Akuni Echapashar	
	Chanditola ..	All the unions except Akuni and Echapashar.	1
	Uttarpara ..	Makla Nawapara	
	Serampore ..	Rajyadharpur. Pearapur	
	Bhadreswar..	Bighati Khalsini	
	Singur ..	All the unions.	1
	Haripal ..	All the unions except Dwarhatta and Gopinathpur	

II.—General Constituency.

Name of local board,	Thana.	Grouping of unions where necessary.	Number of seats to which members are to be elected.
Serampore local board, Hooghly.	Tarakeswar..	Tarakeswar Talupur	1
	Tarakeswar..	Baligari Ramnagar Champadanga.	1
	Jangipara ..	Rajbalhat Rashidpur Dilakash	1
	Haripal ..	Dwarhatta-Gopinathpur.	
	Jangipara ..	Autpur-Jangipara Radhanagar	1
	Jangipara ..	Mandalika Kotalpur Phurfura	
	Chanditola ..	Akuni Echapashar	1
	Chanditola ..	Sheakhala Nababpur-Kumirmora	1
	Chanditola ..	Janai Chanditola	1

Name of local board.	Thana.	Grouping of unions where necessary.	Number of seats to which members are to be elected.
Serampore local board, Hooghly.	Chanditola ..	Begampur Monoharpur	1
	Uttarpara ..	Makla Nawpara	1
	Serampore ..	Rajyadharpur	
	Bhadreswar..	Pearapur Bighati Khalsini	
	Singur ..	Bara Nashibpur Anandanagar	1
	Singur ..	Singur Balarambati Gopalnagar	1
	Haripal ..	Faridpur Bandipur Jejur Kaikala	1
	Haripal ..	Nalikul Ellipur Haripal	1

No. 53L.S.-G.—12th January 1935.—It is hereby notified for general information that, in exercise of the powers conferred by rule 19 of the Election Rules under the Local Self-Government Act, the undersigned determines that the number of members to be elected from the Special Constituency, and each existing thana of the General Constituency, of the Sadar local board in the district of Hooghly will be as shown below against each:—

I.—Special Constituency.

Name of local board.	Thana.	Grouping of unions where necessary.	Number of seats reserved for the minority community.
Sadar local board, Hooghly.	Balagarh ..	All the unions	1
	Pandua ..	All the unions except Itachona-Khanyan.	
	Magra ..	All the unions	1
	Pandua ..	Itachona-Khanyan	
	Chinsura ..	Kodalia-Debanandapore	
	Polba ..	All the unions except Babnan and Makhalpore.	
	Polba ..	Babnan Makhalpore	1
	Dhaniakhali	All the unions	

II.—General Constituency.

Name of local board.	Thana.	Grouping of unions where necessary.	Number of seats to which members are to be elected.
Sadar local board, Hooghly.	Balagarh ..	Guptipara Bankulia Dhobapara Ektarpore Mohipalpore	1
	Balagarh ..	Somra Sripur-Balagarh Sija-Kamalpore Dumurdah-Nityanandapore	1
	Pandua ..	Jamna Batke-Boinchee Berela-Coachmali Haral-Daspore Simlagarh-Vitashin	1
	Pandua ..	Pandua Belun-Dhamashin Rameswarpur-Gopalnagore Jair-Dwarbasini	1
	Pandua ..	Toregram-Panchgora Jamgram-Mondlai Ilsoba-Daspore Sikra-Champta	1
	Mogra ..	Hoera-Dighsui Mogra	1
	Pandua ..	Itachona-Khanyan	
	Chinsura ..	Kodalia-Debanandapore	1
	Polba ..	Rajhat Sugandhya Akna	
	Polba ..	Polba Mahanad Amnan Harit	1
	Polba ..	Gossain-Malipara Satithan Dadpore	1
	Polba ..	Babnan Makhalpore	1
	Dhaniakhali	Belmuri Mandra	
	Dhaniakhali	Gopinathpore Parambua-Sahabazar Dasghara Bhanderhati	1
	Dhaniakhali	Samaspore Dhaniakhali Gurbari	1
	Dhaniakhali	Bhastara Khejurdaha-Molki Gurup	1

No. 456J.G.—26th January 1935.—Maulvi Syed Abu Nasir Muhammad Ali Akbar, Circle Officer of Garhbetta, in the district of Midnapore, now on deputation to the Asansol Municipality, on being relieved of his duties, is posted temporarily to Vishnupur in the district of Bankura for employment on general duty. The posting is made in the public interest.

No. 462J.G.—26th January 1935.—Maulvi Abu Ahmad Faizal Mohi, Sub-Deputy Collector, Vishnupur, in the district of Bankura, is granted leave on average pay, under article 81 (*b*) (*ii*) of the Fundamental Rules, for six weeks from the 15th February 1935, or any subsequent date he may be relieved.

L. B. BURROWS, *Commissioner.*

Burdwan, the 18th January 1935.

It is hereby notified for general information that, under section 13 of the Bengal Village Self-Government Act, 1919 (Bengal Act V of 1919), read with rule 35 of the rules for the election and appointment of members of union boards, etc., Babu Bhutnath Banerji has been duly elected to be a member of Ward No. I of the Paraj union board in police-station Galsi in the Sadar subdivision of Burdwan, *vice* Babu Ashutosh Dutt, resigned.

H. R. SEN, for *District Magistrate.*

Howrah, the 23rd January 1935.

It is notified for general information that, under section 6 (*3*) of the Bengal Village Self-Government Act, 1919 (Bengal Act V of 1919), read with section 13 of the Act, Maulvi Sheikh Mantaz Ali of Ghola, police-station Amta, has been appointed a member of the Dihi Bhursitta union board in police-station Amta of the Uluberia subdivision of the district of Howrah.

L. G. DURNO, *District Magistrate.*

Chittagong Division—Chittagong.

Tippera, the 23rd January 1935.

No. 630M.—It is hereby notified for general information that, under section 13 of Bengal Village Self-Government Act (Act V of 1919), read with section 6 (*2*) and rule 35 of the rules for the election and appointment of members of union boards, Maulvi Haji Hason Ali has been duly elected as a member of the Satbaria union board No. XVII of Chouddagram police-station in the Sadar (South) subdivision of the Tippera district, *vice* Babu Bepin Behari Majumdar, resigned.

Tippera, the 25th January 1935.

No. 707M.—It is hereby notified for general information that, under section 13 of the Bengal Village Self-Government Act (Act V of 1919) read with section 6 (*2*) and rule 35 of the rules for the election and appointment of members of union board, Munshi Bande Ali has been duly elected as a member of the Bayek union board No. XIII of Kasba police-station in the Brahmanbaria subdivision of the Tippera district, *vice* Munshi Yusuff Ali Bhuiya, deceased.

A. HYE, *Addl. District Magistrate.*

Dacca Division—Dacca.

No. 361J.—21st January 1935.—It is hereby notified for general information that, under rule 20 (*b*) of the manual of rules for the management of charitable hospitals and dispensaries in Bengal, published with Government notification No. 138T.Medl., dated the 7th June 1915, the following gentlemen are appointed to be members of the committee for the management of the charitable dispensary at Dattapara in the district of Faridpur:—

The Circle Officer, Shibpur Circle (*ex-officio*).

The Rector, T. N. Academy, Dattapara (*ex-officio*).

The Head Master, T. N. Academy, Dattapara (*ex-officio*).

The President, Azimnagore union board.

Babu Birendra Nath Mahalanabish.

Babu Surendra Nath Bose.

Maulvi Anisuddin Ahmed Choudhury.

Maulvi Choudhury Samsuddin Ahmed.

Maulvi Abu Md. Mazharul Hoque Choudhury.

Dr. Jogneswar Mazumdar.

Maulvi Nazimuddin Ahmed.

Maulvi Sadanuddin Ahmed.

Corrigendum. — No. 372J.—21st January 1935.—In this office notifications Nos. 6046J. and 6160J., dated the 13th and 20th November 1934, published at pages 1846 and 1878, Part I of the *Calcutta Gazette*, dated the 22nd and 29th November 1934, respectively, reconstituting the charitable dispensaries in the district of Dacca, the following corrections are made:—

Monohardi Dispensary.

For

Shah Abdul Mannan

read

Shah Abdus Sobhan.

Sabhar Charitable Dispensary.

For

Babu Narendra Lal Saha

read

Babu Parbati Charan Dutta Kaviraj.

Sripur Charitable Dispensary.

For

Ismatlai Sarkar

read

Ismat Ali Sarkar.

Nawabganj Charitable Dispensary.

For

Maulvi Syed Abedulla
Maulvi A. A. Abdur Raus *alias* Hussain Mia

read

Maulvi Syed Obedulla.
Maulvi A. A. Abdur Rais *alias* Hussain Mia.

No. 374J.—21st January 1935.—It is hereby notified for general information that, under rule 20 (*b*) of the manual of rules for the management of charitable hospitals and dispensaries in Bengal, published with Government notification No. 138T.Medl., dated the 7th June 1915, the following gentlemen are appointed to be members of the committee for the management of the charitable dispensaries at Shivalaya and Harirampur, respectively, in the district of Dacca, in addition to those published with this office notification No. 6160J., dated the 20th November 1934:—

Shivalaya Charitable Dispensary in Manikganj.

Rai Priya Nath Basu Chowdhury.

Harirampur Charitable Dispensary in Manikganj.

Maulvi Syed Bazlar Haque.

No. 379J.—21st January 1935.—It is hereby notified for general information that, under rule 20 (*b*) of the manual of rules for the management of charitable hospitals and dispensaries in Bengal, published with Government notification No. 138T.Medl., dated the 7th June 1915, the following gentlemen are appointed to be members of the committee for the management of the charitable dispensary at Kashba-Majhail in the district of Faridpur:—

The Subdivisional Officer, Goalundo (*ex-officio*).
Maulvi Motahar Hossein.
Khan Sahib Maulvi Masheref Hossein.
Dr. Mohammad Ibrahim, L.M.F.
Sj. Kishori Lal Kundu.
Sj. Mahendra Nath Biswas.
Maulvi Monzar Hossein Shikdar.
Maulvi Abdul Goni Mia.
Sj. Akshoy Kumar Das.
Maulvi Ainaddin Mia.
Maulvi Abdul Hossein Biswas.

No. 383J.—21st January 1935.—It is hereby notified for general information that at the by-election held under section 58 (*1*) of the Bengal Municipal Act, 1932, to fill up a vacancy caused by the setting aside of the general election of the Special Ward A of the Madaripur Municipality in the district of Faridpur by the Second Subordinate Judge of Faridpur, Maulvi Mochanuddin Bhuia was declared duly elected as Commissioner for that ward of the Municipality under rule 22 (*1*) (*a*) of the municipal election rules.

W. H. NELSON, *Commissioner.*

Dacca, the 24th January 1935.

No. 248-51M.—It is hereby notified for general information that, under section 13 of the Bengal Village Self-Government Act, V of 1919, Munshi Yasin Howladar of Kurigaon has been appointed to be a member of the Bejgaon union board in Lohajung police-station, in Munshiganj subdivision of the district of Dacca, *vice* Munshi Abbas Mollah, deceased.

Dacca, the 26th January 1935.

No. 12361-64M.—It is hereby notified for general information that, under section 13 of the Bengal Village Self-Government Act, V of 1919, Babu Nagendra Chandra Gope has been appointed to be a member of the Sripur union board in Sripur police-station in Sadar (North) subdivision of the district of Dacca, *vice* Babu Nagendra Nath Mukherjee, resigned.

B. C. PRANCE, *District Magistrate.*

Faridpur, the 24th January 1935.

Under rule 32A of the Election Rules under the Local Self-Government Act, it is notified for general information that the 12th February to 17th February 1935, both days inclusive, have been fixed for the general and special election of members for the Faridpur Sadar, Madaripur and Goalundo local boards in the following manner:—

Statement showing the polling centres, dates and hours of election and place, time and dates of declaration of results thereof for publication in the Calcutta Gazette, *under rule 32A of the Local Board Election Rules.*

Sadar subdivision.

Thana.	Polling centres.	Date.
	Hours—11 a.m. to 2 p.m	
Bhushna ..	Boalmari thana ..	12th Feb. 1935.
	Dhopaghata Bazar	14th Feb. 1935.
	Chandpur I. B. ..	13th Feb. 1935.
	Sasrail Bazar ..	15th Feb. 1935.
	Madhukhali I. B. ..	17th Feb. 1935.
Sadarpur ..	Souldubi School ..	12th Feb. 1935.
	Chowdhurirhat ..	14th Feb. 1935.
	Sadarpur I. B.	16th Feb. 1935.

N. B.—The election for general seats only for the above two thanas will take place. The result of these elections will be declared at the Subdivisional Headquarters on the 22nd February 1935 between 11-30 a.m. and 2-30 p.m.

Madaripur subdivision.

Thana.	Polling centres.	Date.
	Hours— 11 a.m. to 4 p.m.	
Madaripur ..	Madaripur Municipal School.	16th Feb. 1935.
	Mustafapur H. E. School.	15th Feb. 1935.
	Mithapur H. E. School.	12th Feb. 1935.
	Ditto ..	13th Feb. 1935.
	Angulkata Hat ..	12th Feb. 1935.
	Ditto ..	13th Feb. 1935.
Rajoir ..	Rajoir-Badarpasha H. E. School.	12th Feb. 1935.
	Ditto ..	13th Feb. 1935.
	Ditto ..	14th Feb. 1935.
	Kabirajpur H. E. School.	12th Feb. 1935.
	Ditto ..	13th Feb. 1935.
Kalkini ..	Char Fatebahadur K. M. M. E. School.	15th Feb. 1935.
	Ditto ..	14th Feb. 1935.
	Degreerchar Board School.	12th Feb. 1935.
	Birmohon H. E. School.	12th Feb. 1935.
	Ditto ..	13th Feb. 1935.
Palong ..	Palong H. E. School	15th Feb. 1935.
	Ditto ..	16th Feb. 1935.
	Chikandi H. E. School.	12th Feb. 1935.
	Ditto ..	13th Feb. 1935.
	Angaria H. E. School.	12th Feb. 1935.
	Ditto ..	13th Feb. 1935.
Goshairhat ..	Goshairhat H. E. School.	15th Feb. 1935.
	Ditto ..	16th Feb. 1935.
	Damodya H. E. School.	12th Feb. 1935.
	Ditto ..	13th Feb. 1935.
Bhedarganj ..	Chhoygaon H. E. School.	12th Feb. 1935.
	Ditto ..	13th Feb. 1935.
	Kaneswar H. E. School.	15th Feb. 1935.
	Sakhipur H. E. School.	12th Feb. 1935.
	Ditto ..	13th Feb. 1935.
Naria ..	Naria H. E. School	13th Feb. 1935.
	Ditto ..	14th Feb. 1935.
	Ditto ..	15th Feb. 1935.
	Panditshar H. E. School.	12th Feb. 1935.
	Ditto ..	13th Feb. 1935.
	Ditto ..	14th Feb. 1935.
Sibchar ..	Bhadrasan H. E. School.	12th Feb. 1935.
	Ditto ..	13th Feb. 1935.
	Takerhat Junior Madrasah.	15th Feb. 1935.
	Utrail Aminaddin Howladar Hatkhola.	14th Feb. 1935.
	Ditto ..	15th Feb. 1935.
	Matbarerchar H. E. School.	12th Feb. 1935.
	Sannyasirchar U. B. Office.	15th Feb. 1935.
	Sibchar H. E. School	16th Feb. 1935.
Janjira ..	Rajarchar Katchery No. I on the Noyabhangani River.	13th Feb. 1935.
	Ditto ..	14th Feb. 1935.
	Janjira thana ..	16th Feb. 1935.
	Chardhuparia Katchery.	15th Feb. 1935.

N. B.—The election for the special seat for Goshairhat-Bhedarganj-Naria thanas group will not be held. The result of the election for general seats of these thanas and for the special and general seats of the other thanas will be declared at the Subdivisional Headquarters on 19th February 1935 between 12 noon and 4 p.m.

Goalundo subdivision.

Thana.	Polling centres.	Date.
	Hours—11 a.m. to 5 p.m.	
Goalundo ..	Goalundoghat thana building.	12th Feb. 1935.
	Ditto ..	13th Feb. 1935.
Rajbari ..	Khankhanapur H. E. School.	12th Feb. 1935.
	Basantapur Primary School.	13th Feb. 1935.
	Hamdampur Katchery.	12th Feb. 1935.
	Rajbari thana building.	12th Feb. 1935.
Baliakandi ..	Baharpur M. E. School.	16th Feb. 1935.
	Padamdi Katchery (Nowab-bari).	16th Feb. 1935.
	Baliakandi H. E. School.	16th Feb. 1935.
	Ditto ..	17th Feb. 1935.
	Jamalpur Bazar ..	16th Feb. 1935.
	Karakdi H. E. School.	16th Feb. 1935.

N. B.—The result of the election of Goalundoghat and Rajbari thanas for both special and general seats will be declared at Subdivisional Headquarters, Rajbari, at 4 p.m., on 15th February 1935, and the result of the election for both special and general seats for Baliakandi thana will be declared at Rajbari on 19th February 1935 at 4 p.m.

Faridpur, the 26th January 1935.

Under rule 32A of the Election Rules under the Local Self-Government Act, it is notified for general information that 12th, 14th, 16th and 18th February 1935 have been fixed for the election of members for the general, *i.e.*, ordinary seats for Gopalganj local board in the following manner:—

Thana.	Polling centres.	Date.
	Hours—10-30 a.m. to 3-30 p.m.	
Kasiani ..	Kasiani police-station.	12th Feb. 1935.
	Orakandi H. E. School.	12th Feb. 1935.
	Fukra H. E. School	12th Feb. 1935.
Muksudpur ..	Muksudpur police-station.	14th Feb. 1935.
	Gohala ..	14th Feb. 1935.
	Batikamari School	14th Feb. 1935.
	Goalgram M. E. School.	14th Feb. 1935.
Kotwalipara ..	Kotwalipara police-station.	16th Feb. 1935.
	Pinjury M. E. School	16th Feb. 1935.
	Radhaganj Hat ..	16th Feb. 1935.
Gopalganj ..	Gopalganj police-station.	18th Feb. 1935.
	Kushli Hat ..	18th Feb. 1935.
	Gopinathpur H. E. School.	18th Feb. 1935.
	Ulpur H. E. School	18th Feb. 1935.

N. B.—There is no special seat allocated to any of the thanas. The election will take place for general seats only. The result of the election for Kasiani and Muksudpur thanas will be declared at the thanas at 8 a.m. on 13th February 1935 and 15th February 1935, respectively, and the result of election for Kotwalipara thana will be declared at the thana at 8 a.m. on 17th February 1935 and that of Gopalganj thana at the thana at 8 a.m. on 19th February 1935.

R. L. DE, for *District Magistrate.*

Orders by the Deputy Inspector-General of Police, Dacca Range.

Dacca.—No. 379.—24th January 1935.—Sub-Inspector Bankim Bihari Banarji of Mymensingh is appointed to act as Inspector to fill a temporary post sanctioned in Government order No. 195Pl.S., dated the 4th April 1934.

Maulvi Khawaja Nuruddin, Inspector, Mymensingh, is granted 30 days' leave on average pay with effect from the 5th January 1935.

R. M. WRIGHT,
Deputy Inspector-General of Police.

Presidency Division—Calcutta.

No. 130R.G.—21st January 1935.—Babu Lalit Kumar Datta, Sub-Deputy Collector, is posted temporarily to Jhenidah in the district of Jessore as Circle Officer.

No. 136R.G.—21st January 1935.—Babu Sachindra Nath Mitra, Sub-Deputy Collector, is posted temporarily to Magura in the district of Jessore as Circle Officer.

No. 154R.G.—22nd January 1935.—Maulvi A. K. M. Abdul Latif, Sub-Deputy Collector, on leave, is posted to Bongaon, Jessore.

No. 161R.G.—22nd January 1935.—Babu Phani Bhusan Ghosh, Sub-Deputy Collector, Sadar, 24-Parganas, is granted leave on average pay from the 20th to 30th November 1934, both days inclusive, under rule 81 (*b*) (*ii*) of the Fundamental Rules.

No. 129L.S.-G.—24th January 1935.—It is hereby notified for general information that, in exercise of the powers conferred on me by section 19 (2) of the Bengal Local Self-Government Act, III (B.C.) of 1885, I appoint Babu Joy Krishna Bhattacharji as a member of the Barrackpore local board in the district of the 24-Parganas, in place of Babu Surendra Nath Mukherji, deceased.

No. 181R.G.—24th January 1935.—Babu Nripendra Kumar Sen, Sub-Deputy Collector and Circle Officer, Sadar, Murshidabad, is transferred to the Kandi subdivision of that district as Second Officer.

No. 186R.G.—24th January 1935.—Babu Birendra Nath Maitra, Sub-Deputy Collector, Kandi, Murshidabad, is transferred to headquarters station of that district as Circle Officer.

H. J. TWYNAM, *Commissioner.*

Alipore, the 2nd January 1935.

No. 24/35—1-V.S.-G.—It is hereby notified for general information that, under section 13 of the Bengal Village Self-Government Act (Act V of 1919), Munshi Golam Chand Mondal has been appointed to be a member of the Sankchura union board in Basirhat police-station in the district of 24-Parganas, *vice* Munshi Asiraddin Mondal, deceased.

K. A. L. HILL, *District Magistrate.*

Berhampore, the 24th January 1935.

Under the rules for the managing committees of Government High Schools (Government order No. 1123Edn., dated the 23rd August 1918) as reproduced in section V, Chapter V, pages 198-200 of the Bengal Education Code, 1931, the following gentlemen have been appointed as members of the managing committee of the Nawab Bahadur's Institution, Murshidabad:—

1. The Subdivisional Officer, Lalbagh, President (*ex-officio*).

2. The Munsif of Lalbagh, official other than an Inspecting Officer of the Education Department (*ex-officio*).

3. The Head Master of the School, Vice-President and Secretary (*ex-officio*).

4. Maulvi Abdul Wajed Khan Choudhury, M.A., B.T., an elected representative of the teaching staff other than the Head Master.

5. Mr. K. C. De, I.C.S. (Retired), C.I.E., Manager of the estate of the Nawab Bahadur of Murshidabad (Nawab Bahadur's representative).

6. Prince Syed Kazim Ali Meerza, third son of the Nawab Bahadur of Murshidabad and Chairman, Murshidabad Municipality.

The last two non-official members (Nos. 5 and 6) are representatives of the parents and guardians of the school peoples.

The members other than the *ex-officio* members will hold office for three academic years 1935 to 1937.

O. M. REES, *District Magistrate.*

Krishnagar, the 24th January 1935.

No. 4652L.S.-G.—It is hereby notified for general information that, under section 13 of the Bengal Village Self-Government Act, 1919 (Bengal Act V of 1919), read with rule 35 of the rules for the election and appointment of members, etc., of union boards under the said Act, Munshi Amiruddin Biswas has been duly elected to be a member of the Mira union board (Ward No. II) within the Kaliganj police-station in the Sadar subdivision of the Nadia district, in place of Shekunder Shaik, deceased.

S. BANERJEE, *District Magistrate.*

Orders by the Deputy Inspector-General of Police, C. I. D.

Calcutta. — No. 1205R. — 26th January 1935.—Maulvi Saiyid Hatem Ali, Inspector, is granted 3 months' leave on average pay with effect from 16-1-1935, p.m.

Sub-Inspector Jatindra Nath Sanyal is appointed to act as Inspector in the vacancy.

Maulvi Mumtazuddin Talukdar, Inspector, is granted 1 month's leave on average pay, on medical certificate, in extension of the leave already granted to him.

C. E. S. FAIRWEATHER,
Deputy Inspector-General of Police (offg.).

Rajshahi Division—Jalpaiguri.

No. 262J. — 26th January 1935. — It is hereby notified for general information that, under rule 20(*b*) of the manual of rules for the management of charitable hospitals and dispensaries under the supervision of the Government of Bengal, the following gentlemen are appointed as members of the committee for the management of the Raja P. N. Ray Charitable Dispensary at Rampur-Boalia, Rajshahi:—

The District Magistrate, Rajshahi (*ex-officio*).
The Civil Surgeon, Rajshahi (*ex-officio*).
The Subdivisional Officer, Sadar, Rajshahi (*ex-officio*).
The Chairman, Rajshahi Municipality (*ex-officio*).
Khan Sahib Maulvi Basiruddin Ahmed, M.L.C.
Babu Saral Kumar Ghosh.
Babu Kshitish Chandra Sarker.
Dr. Sourindra Nath Sarker.
Babu Surendra Mohan Maitra.
Mr. Hemendra Kumar Roy.
Maulvi Md. Abdul Hamid.
Babu Sanat Kumar Moitra.

No. 269J.—26th January 1935.—Mr. S. G. Macdonald, Sub-Deputy Collector, Rajshahi, is allowed leave on average pay for six weeks, with effect from the 2nd January 1935, under rule 81(*b*)(*ii*) of the Fundamental Rules.

No. 265J.—26th January 1935. — Under rule 63(*2*), Chapter IV of the Bengal Jail Code, I appoint the following ladies to be non-official lady visitors of the Rajshahi Central Jail for a period of two years:—

Mrs. Amiya Bose.
Mrs. Mrinmayi Debi.

F. W. ROBERTSON, *Commissioner.*

Malda, the 22nd November 1934.

Under rule 32A of the election rules under the Local Self-Government Act, it is notified for general information that the 7th February 1935 and the 9th February 1935 have been fixed for the general election of members for the Malda local board in the following thanas:—

Name of thana.	Number of members.
English Bazar-Bholahat	... 1
Kaliachak	... 1
Manikchak-Ratua	... 1
Shibganj-Kaliachak	... 1
Shibganj	... 1
Nawabganj	... 1
Nachole-Gomastapur	... 1
Malda-Habibpur	... 1
Gazole-Bamongola	... 1
Kharba	... 1
Harischandrapur	... 1
Ratua	... 1

J. N. TALUKDAR, *District Magistrate.*

Rajshahi, the 24th January 1935.

No. 844J.—It is hereby notified for general information that, under section 13 of the Bengal Village Self-Government Act (Bengal Act V of 1919), Munshi Nasiruddin Pramanik has been duly elected as a member of the Chhatni union board No. VI in police-station Nator, *vice* Munshi Habitulla Saha, deceased, and Babu Bejoy Gobinda Goswami has been duly elected as a member of the said union board, *vice* Babu Baikuntha Nath Goswami, deceased.

A. S. LARKIN, *District Magistrate.*

Rangpur, the 24th January 1935.

No. 88J.—It is hereby notified for general information that, under section 13 of the Bengal Village Self-Government Act, 1919 (Bengal Act V of 1919), read with rule 36 of the rules for the election and appointment of members of union boards, etc., Maulvi Syed Shah Jahan of Tamfat has been appointed by me to be a member of the Tamfat union board in Kotwali police-station in the Sadar subdivision of the Rangpur district, *vice* Maulvi Syed Yusuf Ali, deceased.

N. M. AYYAR, *District Magistrate.*

Orders by the Deputy Inspector-General of Police, Rajshahi Range.

Jalpaiguri.—No. 721.—25th January 1935. —Babu Panchanan Das, Inspector, Pabna, is granted 1 month's leave on average pay, on medical certificate, under rule 81 (*b*) (*ii*) of the Fundamental Rules, in extension of the leave already granted to him.

The existing acting arrangements will continue.

Babu Debendra Mohan Bhaumik, Court Inspector, Jalpaiguri, is granted 4 months' leave on average pay, on medical certificate, under rule 81 (*b*) (*ii*) of the Fundamental Rules, in extension of the leave already granted to him.

The existing acting arrangements will continue.

F. P. WALKER,
Deputy Inspector-General of Police.

Registered No. C207

The Calcutta Gazette

THURSDAY, JANUARY 31, 1935.

PART IA

Orders and Notifications by the Government of India republished for general information.

LEGISLATIVE DEPARTMENT.

NOTIFICATION.

New Delhi, the 14th January 1935.

No. F.-434-II/34-C. & G.—For the purposes of sub-section (1) of section 63-B of the Government of India Act, and in pursuance of the provisions of sub-rule (3) of rule 27 of the Legislative Assembly Electoral Rules, the Governor General is pleased to nominate the following persons, being officials, to be members of the said Legislative Assembly:—

* * * * *

Mr. Jatindra Mohan Chatarji.
Mr. Nrisinha Ranjan Mukharji.

L. GRAHAM,
Secy. to the Govt. of India.

FINANCE DEPARTMENT (CENTRAL REVENUES).

NOTIFICATION.

CENTRAL EXCISES.

New Delhi, the 19th January 1935.

No. 3.—In exercise of the powers conferred by section 18 of the Matches (Excise Duty) Act, 1934 (XVI of 1934), the Governor-General in Council is pleased to direct that, with effect from the 1st April 1935, the following further amendment shall be made in the Matches (Excise Duty) Order, 1934, namely:—

In the said Order, after clause 44 the following clause shall be inserted, namely:—

"44A. The name of the manufactory, or a distinguishing mark by which the manufactory can be traced, shall be clearly shown on the manufactory's label affixed to packets, boxes or booklets. Where a distinguishing mark is used without the manufactory's name, specimens of the labels shall be submitted to the Collector for his approval and record. A distinguishing mark may take the form of a special design on the label."

A. J. RAISMAN,
Joint Secy. to the Govt. of India.

DEPARTMENT OF INDUSTRIES AND LABOUR.

NOTIFICATION.

New Delhi, the 14th January 1935.

No. S.-601.—In exercise of the powers conferred by section 37 of the Indian Electricity Act, 1910 (IX of 1910), the Governor-General in Council is pleased to direct that the following further amendments shall be made in the

Indian Electricity Rules, 1922, the same having been previously published as required by section 38 of the said Act, namely:—

1. In rule 2 of the said Rules,—

(*a*) in clause (*r*), for the figures "1901" the figures "1923" and for the marginal reference "VIII of 1901" the marginal reference "IV of 1923" shall be substituted;

(*b*) for clause (*u*) the following clause shall be substituted, namely:—

"(*u*) 'neutral conductor' means that conductor of a multi-wire system, the pressure of which is normally intermediate between the pressures of the other conductors of the system."

(*c*) in clause (*y*),—

(*i*) for the brackets and letter "(*e*)" the brackets and letter "(*y*)" shall be substituted;

(*ii*) for the figures and brackets "13(*1*)" the figures and brackets "15(*1*)" shall be substituted;

(*iii*) for the figures "1901" the figures "1923" and for the marginal reference "VIII of 1901" the marginal reference "IV of 1923" shall be substituted.

2. For sub-rule (*3*) of rule 13 of the said Rules the following sub-rule shall be substituted, namely:—

"(*3*) The advertisement shall be inserted by the applicant in at least three successive issues of such newspaper as the Local Government, having regard to its circulation among persons likely to be interested, may direct, and, in the absence of any such direction, in at least three successive issues of any newspaper published within the proposed area of supply or if there is no such newspaper, of any newspaper, published within the province."

3. In rule 16 of the said Rules for the marginal subject "Grant of licence" the marginal subject "Approval of draft licence" shall be substituted.

4. In rule 17 of the said Rules for the word "proposed" the word "approved" shall be substituted.

5. After rule 29 of the said Rules the following rules shall be inserted, namely:—

"29A. *Limits of errors in meters.*—The limits of error permissible in a meter placed upon a consumer's premises in accordance with section 26 of the Act are for the purposes of that section the following, namely:—

(*a*) where the meter is of a type included in the "British Standard Specification for Electricity Meters; No. 37" dated 1930, the limits of error laid down in that Specification;

(*b*) where the meter is of any other type, it shall not register more than 3 per cent. above or below absolute accuracy at all loads in excess of one-tenth of full load and up to full load;

(*c*) no meter shall register at no load.

29B. *Conditions for maximum demand indicators.*—The conditions with which a maximum demand indicator or other apparatus placed upon a consumer's premises in accordance with section 26 of the Act shall comply are for the purposes of that section the following, namely:—

(*a*) it shall not register more than 3 per cent. above or below absolute accuracy at all loads in excess of one-tenth of full load and up to full load;

(*b*) it shall not register at no load."

6. Rule 50 of the said Rules shall be renumbered 50(*1*) and to the said rule as so renumbered, the following sub-rule shall be added, namely:—

"(*2*) When the external conductor is bare and uninsulated, it shall be connected with earth by the person to whom it belongs, and no switch, cut-out or circuit breaker shall be inserted in that conductor or in any conductor connected thereto.

Exception.—Switches, cut-outs or circuit breakers may be used to break the connection with the generators or transformers supplying energy; provided that in no case of bare external conductor the connection of the conductor with the earth is thereby broken."

7. In rule 87 of the said Rules for the figures "1901" the figures "1923" and for the marginal reference "VIII of 1901" the marginal reference "IV of 1923" shall be substituted.

A. G. CLOW,

Joint Secy. to the Govt. of India.

FOREIGN AND POLITICAL DEPARTMENT.

NOTIFICATION.

New Delhi, the 16th January 1935.

No. 62-G.—*Corrigendum.*—The following should be substituted for the notification of the Government of India in the Foreign and Political Department, No. 620-G., dated the 28th November 1934:—

"With the sanction of His Majesty's Government, the Governor-General in Council is pleased to recognise provisionally the appointment of Monsieur P. Dubois as Consul for France at Calcutta in charge of the Consulate-General."

H. A. F. METCALFE,

Foreign Secy. to the Govt. of India.

Registered No. C207

The Calcutta Gazette

THURSDAY, JANUARY 31, 1935.

PART IB

Educational Notices.

Rajshahi Division.

Jalpaiguri, the 21st January 1935.

The following candidates have been awarded the Lower Primary Scholarships reserved for backward classes on the results of the Primary Preliminary Scholarship Examination of 1934. Each scholarship is of the value of Rs. 2 a month tenable for two years with effect from the 1st January 1935 :—

(Ten Government Lower Primary Scholarships reserved for backward classes.)

	Name of scholars.	Name of schools from which the scholars appeared.	Name of schools where the scholarship is tenable.
1	Birendra Nath Sarkar ..	Kajla U. P. School (Rajshahi) ..	Kajla U. P. School (Rajshahi).
2	Madan Gopal Sarkar ..	Baya Board Primary School (Rajshahi)	Baya Board Primary School (Rajshahi).
3	Jamini Kanta Das ..	Paraharipur Board Primary School (Dinajpur).	Raiganj H. E. School (Dinajpur).
4	Kanai Lal Roy ..	Chakoakhuti Board Primary School (Jalpaiguri).	Alipur Duar H. E. School (Jalpaiguri).
5	Mahendra Nath Barman ..	Rupsi Napithpara Primary School (Rangpur).	Ranipukur Board Primary (Rangpur).
6	Bichitra Kumar Roy Chowdhury	Yakubia Maktab (Bogra) ..	Zilla School (Bogra).
7	Kartick Chandra Mali ..	Koladi Maktab (Pabna) ..	Koladi Maktab (Pabna).
8	Upendra Nath Das ..	Pukurpar Primary School (Pabna) ..	Dariapur M. E. School (Pabna).
9	Mahendra Rajbangshi ..	Kharibari Santhal Primary School (Malda).	Kharibari Santhal Primary School (Malda).
10	Award of this scholarship will be made later on.		

K. AHMED,

Inspector of Schools, Rajshahi Division.

Orders by the Principal, Eden High School for Girls, Dacca.

Dacca, the 16th January 1935.

The under-mentioned pupils of the Eden High School for Girls, Dacca, are awarded special Middle English Scholarships, with effect from the 1st January 1935, on the usual condition of good conduct and satisfactory progress. The value of each scholarship is Rs. 5 a month and is tenable for four years in the Eden High School for Girls, Dacca:—

(1) Karuna Gupta.

(2) Sachirani Ghosh.

The under-mentioned pupils of the Eden High School for Girls, Dacca, are awarded special Middle Vernacular Scholarships, with effect from 1st January 1935, on the usual condition of good conduct and satisfactory progress. The value of each scholarship is Rs. 4 a month and is tenable for two years in the Eden High School for Girls, Dacca:—

(1) Ramala Ghosh.

(2) Sibani Sen.

The under-mentioned pupils of the Eden High School for Girls, Dacca, are awarded special Lower Primary Scholarships, with effect from the 1st January 1935, on the usual condition of good conduct and satisfactory progress. The value of each scholarship is Rs. 3 a month and is tenable for three years in the Eden High School for Girls, Dacca:—

(1) Sandhyarani Ghosh.

(2) Annapurna Sarcar.

(3) Nirmala Pal.

V. ALPHONSO, *Principal,*

Eden High School for Girls, Dacca.

Presidency Division.

Calcutta, the 21st January 1935.

Addendum to the Results of the Primary (Maktab) Final Examination, 1934, Khulna district, published in the Calcutta Gazette of 10th January 1935.

The following candidate is declared to have passed the Primary (Maktab) Final Examination, 1934:—

"E" indicates that the candidate has passed in English.

Roll No.	Name.	Division.
	Khulna District.	
	Bagerhat Centre.	
	Bagmara U. P.	
19	Susil Ranjan Das (E) ..	I

J. G. SEN, for *Inspector of Schools.*

The Elliott Prize for Scientific Research for 1935—39.

Calcutta, the 15th January 1935.

In accordance with the Government of Bengal, General Department, revised notification No. 112T.Edn., dated the 5th May 1917, published in Part I, page 667 of the *Calcutta Gazette*, 1917, the Elliott Prize for Scientific Research for 1935 will be awarded to the author of the best original essays giving the results of original research or investigation made by the candidate in Geology and Biology (including Pathology and Physiology) and published during the years 1931—34, inclusive.

In accordance with the notification cited above, the Elliott Prize for Scientific Research for 1936 will be awarded to the author of the best original essays, giving the results of original research or investigation made by the candidate in Mathematics and published during the years 1932—35, inclusive.

Any native of Bengal, or Bihar and Orissa, or any Anglo-Indian or domiciled European, residing in Bengal, or Bihar and Orissa, may compete for the prize.

The essays of competitors must be sent in so as to reach the President of the Asiatic Society of Bengal, c/o the General Secretary, 1, Park Street, Calcutta, by the end of June of this year. Author's reprints must be submitted and not manuscripts. The prize will be awarded to the best competitor and be conferred publicly at the Annual General Meeting of the Asiatic Society of Bengal in February 1936.

Preference will be given to researches leading to discoveries likely to develop the industrial resources of Bengal, or Bihar and Orissa.

The value of the prize will not be less than Rs. 210. In the event of no essay being deemed of sufficient merit, no prize will be awarded.

The prizes for the next four years will be allotted as follows:—

1936—Mathematics.

1937—Chemistry.

1938—Physics.

1939—Geology and Biology (including Pathology and Physiology).

All essays submitted must have been published during the four calendar years immediately preceding that for which the prize is given.

L. L. FERMOR,

President, Asiatic Society of Bengal.

SYAMAPRASAD MOOKERJEE,

Vice-Chancellor, Calcutta University.

J. M. BOTTOMLEY,

Director of Public Instruction, Bengal.

NOTIFICATION.

Chittagong, the 15th January 1935.

An Examination in the Art and Practice of Teaching for teachers of English subjects in Boys' Secondary Schools (aided and unaided) including Madrasahs in the Chittagong Division will be held at the Chittagong Normal School on the 8th March 1935, at 11 a.m., and on the following date, if necessary. The examination of teachers of vernacular subjects and oriental classical languages of the same schools will also be held on the same date and at the same place and hour.

2. The following teachers are eligible for the examination:—

(*a*) Teachers of English subjects who have passed (*i*) the Matriculation or some higher University examination, or (*ii*) the Middle English Scholarship Examination or the terminal examination at the end of the middle stage of instruction. The examination of these teachers will be conducted in English.

(*b*) Teachers of vernacular subjects who have passed the University examinations named in (*a*) above or the Middle Vernacular Scholarship Examination, or the terminal examination at the end of the middle stage of instruction. The examination of these teachers will be conducted in vernacular.

(*c*) Pandits and Maulvis employed in teaching oriental classical languages other than pandits in Sanskrit *tôls* and Maulvis in Madrasahs. They must have passed the Sanskrit Title Examination or the Final Examination of a senior grade Madrasah. The examination in the case of these classes of teachers will be conducted either in English or vernacular at the option of the candidate.

3. The examination will consist of—

(*a*) A practical examination in class control, the candidate being required to keep a class of, at least, a dozen boys attentive and fully occupied throughout a lesson.

(*b*) A practical test of teaching ability, the candidate being required to give two lessons on any two of the subjects—English, Bengali, Sanskrit, Arabic, Persian, Urdu, History, Geography, Arithmetic, Algebra, Geometry, etc.

(*c*) An oral examination, in which the Inspector of Schools or other examiner will ask questions on the art of teaching object lessons, class management, organisation and discipline.

The following books are recommended for study by the candidate:—

(*i*) For teachers of English subjects—

(1) Indian Teachers' Guide, by P. Wren.

(2) Indian School Organisation, by P. Wren.

(3) Suggestions for the Consideration of Teachers (Board of Education, Whitehall).

(4) Talk to Teachers (James).

(*ii*) For teachers of vernacular subjects—

(1) বিবিধ বিধান, by A. N. Adhikari.

(2) Teachers' Manual, by Khan Bahadur Ahsanullah.

(3) পাঠ টীকা লিখিবার পদ্ধতি, by Jagannath Dey.

(4) মনোবিজ্ঞান, by S. C. Brahmachary.

(5) শিক্ষাবিজ্ঞান, by Khan Sahib Abdur Rahaman Khan, M.A., B.L.

(*iii*) Teachers of oriental classical languages may study any of the above sets of books.

4. Intending candidates from high schools and senior Madrasahs should submit their applications through the Head Masters or Superintendents, as the case may be, and teachers of middle schools and junior Madrasahs through the Subdivisional Inspectors of Schools, so as to reach this office not later than the 28th February 1935. Every candidate will produce at the time of the examination the certificate of his having passed the University or other examination, which admits him to the present examination. The following information should accompany the application:—

(1) Name (in full).

(2) Name of father (in full).

(3) Names of native village and district.

(4) Last examination passed.

(5) Year of passing.

(6) Period of service as a teacher.

(7) Present appointment with date (mention whether he is a teacher of English subjects or vernacular subjects or of oriental language).

(8) Two class subjects in which he wishes to be examined.

(9) Signature of applicant with full address.

5. Every candidate must bring with him at the time of the examination two lesson notes on the subjects in which he wishes to give lessons. These notes should be made over to the examiner at the time of the practical examination.

M. A. JAAFAR,

Inspector of Schools, Chittagong Division.

Education Department, Bengal.

NOTIFICATION.

Calcutta, the 23rd January 1935.

Subject to the usual conditions of good conduct and satisfactory progress, the Barton Scholarship of Rs. 7 a month for the year 1934 is awarded to Prabodh Kumar Chattopadhyay, who passed the Matriculation Examination held in 1934 from the Jessore Zilla School.

The scholarship is tenable at the Narail Victoria College for two years with effect from the 1st June 1934.

J. M. BOTTOMLEY,
Director of Public Instrn., Bengal.

Education Department, Bengal.

NOTIFICATION.

Calcutta, the 18th January 1935.

The Durga Charan Laha Graduate Scholarship of Rs. 40 a month for the year 1934 tenable by a graduate preparing for the M.A. or M.Sc. Examination in Physical Science is awarded to Bishnucharan Bagchi, who passed the B.A. Examination in 1934 from the Scottish Church College, Calcutta.

The scholarship is tenable in Calcutta University for a period of two years with effect from 1st June 1934.

J. M. BOTTOMLEY,
Director of Public Instrn., Bengal.

Education Department, Bengal.

NOTIFICATION.

Calcutta, the 28th January 1935.

In the list of students who were awarded Mohsin stipends on the results of the Junior Madrasah Examination held in October and November 1934, published under this office notification, dated the 3rd January 1935, at page 180 in Part IB of the *Calcutta Gazette* of the 17th January 1935—

For

"4. Ali Ahmad, Hingula Hossamia Junior Madrasah, district Tippera"

please *read*

"4. Ali Ahmad, Duaria Junior Madrasah, district Tippera."

J. M. BOTTOMLEY,
Director of Public Instrn., Bengal.

Education Department, Bengal.

NOTIFICATION.

Calcutta, the 28th January 1935.

In the list of successful students at the Junior Madrasah Examination held in October and November 1934, published under this office notification, dated the 29th December 1934, at page 189 in Part IB of the *Calcutta Gazette* of the 17th January 1935—

For

"Hingula Hossamia Junior Madrasah"

please *read*

"Duaria Junior Madrasah."

J. M. BOTTOMLEY,
Director of Public Instrn., Bengal.

Calcutta University.

NOTIFICATION No. R. 100.

Senate House, the 17th January 1935.

It is notified for general information that the Government of Bengal (Ministry of Education) are pleased to sanction the following changes in Chapter XIII of the Calcutta University Regulations relating to election of Fellows by Graduates:—

"That the last sentence of section 3, beginning with the words 'The Registrar shall cause, etc.' (page 77 of the edition of 1932) be replaced by the following:—

'It shall also be accompanied by a declaration signed by the candidate himself as assenting to the nomination.

Any candidate may withdraw his candidature by notice in writing subscribed by him which must reach the Registrar seventeen clear days before the date fixed for election.

If the number of candidates who are duly nominated and who have not withdrawn their candidature in the manner and within the time specified above exceeds that of the vacancies, the Registrar shall cause a list of the nominees and of the statements to be printed and forwarded to the Registered Graduates fifteen clear days before the date fixed for election.

If the number of candidates is equal to the number of vacancies, the candidates shall be declared duly elected subject to the approval of the Chancellor.' "

The changes will be given effect to from the election of 1935.

J. CHAKRAVORTI, *Registrar.*

Chittagong Division.

Chittagong, the 17th January 1935.

The following candidates have passed the Primary (Maktab) Final Examination, 1934 :—

(E indicates that the candidate has passed in English.)

	Name of candidate.	Division.
	Tippera District.	
	Gredhari Free Primary School.	
1	Abdul Ghafur (E) ..	I
2	Siddique Mian (E) ..	I
3	Azizur Rahman (E) ..	II
4	Tarapada Ray (E) ..	I
5	Shafiqur Rahman (E) ..	II
6	Md. Saiyadur Rahman (E) ..	I
7	Noor Mian (E) ..	II
8	Md. Ziauddin (E) ..	II
9	Md. Sultan Ahmad (E) ..	II
10	Abdur Rauf (E) ..	II
11	Bipin Chandra Majumdar (E) ..	II
12	Siraj Ahmad (E) ..	II
13	Mustaqali Khan (E) ..	II
14	Sirajul Islam (E) ..	II
15	Bazlul Rahman Bhuiyan (E) ..	II
	Balarampur Board School.	
1	Rangalal De (E) ..	II
2	Ali Mian (E) ..	II
	Bhatpara Board School.	
1	Ibrahim Mian ..	II
2	Md. Yunus ..	II
	Kalirbazar Board School.	
1	Harendra Kumar Sarma ..	I
2	Bidhu Bhusan Bakshi ..	II
3	Chandra Mohan Sarma ..	II
4	Kshitindra Kumar Sarkar ..	II
	Rajmangalpur Board School.	
1	Dhirendra Chandra Datta (E) ..	I
2	Jogendra Chandra Datta ..	II
3	Ramesh Chandra Datta ..	II
4	Monoharan Acharjee ..	II
5	Birendra Chandra Chakrabarti (E) ..	I
6	Hemalata Saha (E) ..	I
	Jhaknipara Primary School.	
1	Sultan Ahmad ..	II
	Krishnanagar Primary School.	
1	Abdur Rashid (E) ..	I
2	Manada Mohan Chaudhury (E) ..	II
3	Makhanlal Sinha Biswas (E) ..	II
	Jangalia Primary School.	
1	Manirul Islam ..	II
2	Swadesh Chandra Bhowmik ..	II
	Kamalapur Primary School.	
1	Ali Ahmad ..	II
	Amratali Primary School.	
1	Ananga Mohan Datta (E) ..	I
2	Suresh Chandra Chakravarti (E) ..	I
3	Suresh Chandra Sutradhar ..	II
	Monohar Primary School.	
1	Usharanjan Deb ..	I
2	Kalidas Bhattacharjee (E) ..	I
3	Sukesh Chandra Lodh (E) ..	II

	Name of candidate.	Division.
	Chandpur Subhapur Primary School.	
1	Muzaffar Ahmad *alias* Tunnu Mian ..	I
2	Syed Md. Yunus (E) ..	II
3	Abdul Wahed (E) ..	II
4	Abdul Latif Chaudhury ..	II
5	Md. Abul Kashem ..	II
6	Tamizul Husain ..	II
7	Afzalur Rahman ..	II
8	Abdul Aziz (E) ..	I
	Bamail Board School.	
1	Amanuddin (E) ..	II
2	Md. Yusuf (E) ..	II
3	Upendra Chandra Sil ..	II
4	Umarali ..	II
	Haripur Maktab.	
1	Abdul Aziz ..	II
2	Abul Bashr (E) ..	II
3	Jainul Abedin Majumdar (E) ..	II
4	Mir Ahmad Chaudhury (E) ..	II
	Kashkhamar Maktab.	
1	Korbanali (E) ..	I
	Dhanuakhola Maktab.	
1	Raushanali ..	II
	Mogaltooly Primary School.	
1	Abdul Matin (E) ..	II
2	Shafiq Ahmad (E) ..	II
	Mainamati Free Primary School.	
1	Upendra Chandra Nath (E) ..	I
2	Nagendra Chandra Nath ..	I
3	Harendra Chandra Saha (E) ..	II
4	Monoranjan Saha ..	II
5	Suresh Chandra Saha ..	II
	Chandsar Free Primary School.	
1	Dhirendra Mohan De (E) ..	I
2	Promoderanjan Das (E) ..	I
3	Abdul Quader ..	II
4	Prangopal Sarma ..	I
5	Md. Ibrahim ..	II
6	Syedali ..	II
	Harindhara Free Primary School.	
1	Idris Mian (E) ..	I
2	Prasanna Kumar Das (E) ..	II
3	Ramesh Chandra Namadas (E) ..	II
	Shaha Daulatpur Free Primary School.	
1	Ayubali (E) ..	I
2	Shaha Alam ..	I
3	Anwarullah Majumdar (E) ..	I
4	Kalimohan Nath ..	I
	Bagilara Free Primary School.	
1	Madanmohan Sarma ..	I
2	Ali Ahmad ..	I
	Kharera Board Primary School.	
1	Kamini Kumar Nath (E) ..	I
2	Lalmohan Datta (E) ..	I
3	Manindra Kumar Saha (E) ..	I
4	Suresh Chandra Chakravarti (E) ..	I
5	Aminali (E) ..	I
6	Sultan Ahmad (E) ..	II
	Baladkuria Board School.	
1	Diki Mian ..	

	Name of candidate	Division.
	Mithilapur Board School.	
1	Neazuddin Ahmad (E) ..	II
	Payat Primary School.	
1	Sachindra Mohan Chakravarti (E) ..	II
	Malapara Board Primary School.	
1	Akamatali (E) ..	II
2	Abdus Samad ..	II
3	Sanatan Chandra Sutradhar ..	II
	Nagaish Board Primary School.	
1	Ali Akbar ..	II
2	Benimadhab De (E) ..	I
	Ghoshnagar Free Primary School.	
1	Birendra Kishore Das (E) ..	I
2	Debendra Mohan Nath ..	II
	Dakshingram Primary School.	
1	Kabir Ahmad (E) ..	I
2	Krishna Chandra Malladas (E) ..	I
3	Abdul Hakim (E) ..	I
	Rajapur Board Primary School.	
1	Ashit Chandra De (E) ..	I
	North Syampur Maktab.	
1	Muhammad Ali ..	II
2	Abdul Wahab ..	II
3	Dudhu Mian ..	II
4	Shamsul Haq (E) ..	II
	Mahasmara Maktab.	
1	Abdul Haq (E) ..	II
2	Akhtaruzzaman (E) ..	II
	Balikhara Maktab.	
1	Dudhu Mian (E) ..	II
2	Serajul Islam (E) ..	II
3	Hafizur Rahman (E) ..	II
	Ramchandrapur Maktab.	
1	Sayedali ..	II
2	Abdul Hafez ..	II
3	Shamsuddin (E) ..	II
4	Serajuddin ..	II
	Ajnapur Maktab.	
1	Abdul Ghani (E) ..	II
2	Abdul Hakim (E) ..	I
3	Abidali ..	II
4	Abdul Hafez ..	II
	Sifutia Maktab.	
1	Taiyabali ..	II
	Mashora Maktab.	
1	Kazi Daulat Ahmad (E) ..	II
2	Ali Akbar (E) ..	II
3	Abdul Aziz ..	II
	Chhatiani Maktab.	
1	Syedali (E) ..	II
	Sajghar Maktab.	
1	Raqibuddin (E) ..	II
	Chobbash Maktab.	
1	Abdul Latif	II
2	Habibullah	II

	Name of candidate.	Division.
	Panchora Maktab.	
1	Muhammadali (E) ..	I
2	Sekandarali (E) ..	II
3	Satbandhu Chakravarti (E) ..	I
4	Prafulla Kumar Chakravarti (E) ..	II
	Kedarpur Maktab.	
1	Serajul Haq Bhuiyan ..	II
2	Nurul Islam Bhuiyan ..	II
	Harimangal Maktab.	
1	Asmatali (E) ..	I
2	Gopal Chandra De (E) ..	II
3	Abdul Ghafur ..	II
4	Sharafatali (E) ..	II
5	Anwar Husain (E) ..	II
	Sankhuchail Maktab.	
1	Md. Idris ..	II
2	Ramani Mohan Datta (E) ..	I
3	Gopal Chandra Brahma (E) ..	II
	Laribag Maktab.	
1	Ali Ahmad (E) ..	II
2	Talebali (E) ..	II
	Jirain Maktab.	
1	Abdul Khaleq (E) ..	I
	Nala Maktab.	
1	Abdus Subhan (E) ..	II
	Gobindapur Maktab.	
1	Elahi Baksha ..	II
2	Abdul Jabbar Mir (E) ..	I
3	Abdur Razzaq ..	II
4	Abdul Wahab ..	II
	Salukia Primary School.	
1	Upendra Chandra Bhaumik ..	II
2	Gobinda Chandra Bhaumik ..	II
3	Md. Serajul Islam ..	I
4	Md. Ala Bakhsh (E) ..	I
5	Hasan Ahmad ..	II
6	Jatish Chandra Majumdar ..	II
	Bara Hatua Maktab.	
1	Satish Chandra Nama ..	I
	Chilora Maktab.	
1	Sekandra Ali Molla ..	II
	Panchpukuria Board School.	
1	Suratali ..	II
2	Muslemur Rahman Bhuiyan (E) ..	II
3	Harendra Chandra Nath ..	II
4	Tafazul Ahmad Bhuiyan ..	II
5	Syed Shamsul Haq ..	II
	Mahichail Board School.	
1	Lalit Mohan Das ..	II
2	Anil Chandra Bear ..	II
3	Dud Mian Majumdar ..	II
	Pihar Board School.	
1	Nepal Chandra De Sarkar ..	I
2	Monoranjan Nath Bhaumik ..	II
3	Dhirendra Chandra Sil ..	I
4	Nagendra Chandra Nath Bhaumik ..	I
5	Baradakanta Debnath ..	I

	Name of candidate.	Division.
	Shahapur Board Primary School.	
1	Nagendra Chandra Datta Majumdar	I
2	Jnanendra Chandra Sarkar	I
3	Upendra Chandra Sil	I
4	Abdur Rahman	II
5	Kadimali	II
6	Serajuddin	II
7	Reshanali	II
	Kartalla Primary School.	
1	Chinta Haran Chakravarti	II
2	Faizuddin	II
3	Abdul Qauder	II
	Jeruaish Maktab.	
1	Serajul Haq Mian	II
	Tulatali Primary School.	
1	Abbasali	II
	Naotala Maktab.	
1	Md. Sekandarali (E)	I
	Kaduti Primary School.	
1	Sital Chandra De (E)	I
2	Jajneswari Nandi	II
3	Ramani Mohan Bhawal	II
	Deora Board Primary School.	
1	Md. Jinnatali (E)	I
2	Md. Sona Mian (E)	II
	Dherara Board Primary School.	
1	Haripada Chakravarti	I
	Chhota Tulagaon Board Primary School.	
1	Atul Chandra Das	II
	Sasaya Maktab.	
1	Md. Yasin	II
2	Sekandarali Mollah	II
	Chhota Sakpur Primary School.	
1	Surabala Gope	II
	Bar Hatua Maktab.	
1	Amina Khatoon	I
	Arai Maktab.	
1	Moharamali	I
2	Mokaramali	II
3	Panchananda Bhaumik	II
	Barkanta Primary School.	
1	Ashutosh Chakravarti (E)	II
2	Sashi Bhusan Datta	II
3	Sudhir Chandra Datta (E)	II
	Songchail Primary School.	
1	Atindra Mohan Chakravarti	II
	Tebaria Maktab.	
1	Asmatullah	II
	Chhota Dalghar Board School.	
1	Abdul Wahab Chaudhuri	II
2	Abdul Latif Chaudhuri	I
	Esafpur Maktab.	
1	Keramatali (E)	II

	Name of candidate.	Division.
	Saiyadpur Maktab.	
1	Sayedali (E)	I
2	Sekandarali (E)	II
3	Ashrafali (E)	II
	Alipur Primary School.	
1	Mafizur Rahman (E)	I
2	Abdul Jalil (E)	I
3	Abdur Rahman, I (E)	I
4	Krishna Kumar Das (E)	II
5	Mafizul Haq Pathan (E)	II
6	Nazir Ahmad Khan (E)	I
7	Abdur Rahman, II (E)	II
	Aliganj Practising Primary School.	
1	A. Y. M. Habibur Rahman (E)	I
2	Haripada De (E)	I
3	Ali Ahmad (E)	I
	Barkul Board Primary School.	
1	Prafulla Chandra Saha (E)	II
2	Muslem Mian (E)	II
3	Makhanlal Saha (E)	II
4	Nikunjalal Saha (E)	II
5	Kshitish Chandra Chakravarti (E)	II
6	Krishna Kishore Saha (E)	II
7	Amritalal Poddar (E)	II
8	Nityananda Saha (E)	II
	Belghar Primary School.	
1	Dinesh Chandra Pal	II
2	Sekandarali	II
	Debipur Primary School.	
1	Jainul Abedin	II
2	Salamatullah	II
	Khilabazar Primary School.	
1	Nibaran Chandra Das	II
2	Monomohan Kapali	II
	Maishamura Primary School.	
1	Somesh Ranjan Das	II
2	Hedayetullah	II
3	Elahi Bakhsh	II
	Nohata Board Primary School.	
1	Sachindra Das	II
	Nahari Board Primary School.	
1	Abdul Matin (E)	I
2	Ahmadullah (E)	I
3	Abdul Majid	I
4	Lutful Haq	II
	Ramchandrapur Primary School.	
1	Abdul Wadud (E)	II
2	Habibullah Khondkar (E)	II
3	Mahabbatali	II
	Belcho Maktab.	
1	Wazebul Haq (E)	II
2	Jainul Abedin (E)	I
3	Sorajul Haq	II
4	Maqbul Huda (E)	II
5	Abdul Mannan (E)	II
6	Abdul Mannan (E)	II
7	Moherullah	II
8	Ershadali	II
	Beliapara Maktab.	
1	Muhammadali	I

	Name of candidate.	Division.
	Befuia Maktab.	
1	Abdul Majid (E)	I
2	Abdul Latif (E)	I
3	Abdul Ghafur (E)	II
4	Shamsul Haq (E)	I
5	Iman Husain (E)	I
6	Imanali (E)	I
	Chengachal Maktab.	
1	Ali Ahmad	I
2	Shamsul Haq	I
	Dhadda Maktab.	
1	Abdul Waheb (E)	I
2	Ali Ahmad (E)	I
3	Ramzanali	II
	Debkara Maktab.	
1	Muhammad Nur Ahmad	II
2	Muhammad Adamali	II
3	Muhammad Tarikullah	II
4	Muhammad Ali Ahmad	II
5	Muhammad Sujatali	II
6	Muhammad Jinu Mian	II
	Hatila Maktab.	
1	Muhammad Loqman	II
2	Satindra Chandra Nath	II
	Suhilpur Maktab.	
1	Abdus Subhan Khan (E)	I
	Kherihar Maktab.	
1	Abdul Hai (E)	II
2	Abdul Karim (E)	II
3	Muhammad Mian	II
4	Muhammad Yunus Mian (E)	II
5	Jainul Abedin (E)	II
6	Nuruzzaman	II
	Kapaikap Maktab.	
1	Muhammad Idris (E)	I
2	Muhammad Yunus Khan	II
3	Muhammad Serajul Haq	II
4	Abdul Hamid	II
	Lankara Maktab.	
1	Muslehuddin (E)	II
	Maligaon Maktab.	
1	Abdul Latif (E)	II
	Muninag Maktab.	
1	Abdur Rab (E)	II
	Matain Maktab.	
1	Lutfur Rahman (E)	II
2	Abdul Jabbar (E)	II
3	Din Islam (E)	II
	Menapur Maktab.	
1	Muhammad Salimuddin (E)	I
2	Mujibul Haq	II
3	Hasanali	II
4	Shahazuddin (E)	I
5	Muhammad Elis	II
	Nischintapur Maktab.	
1	Rajmohan Nath	II
	Nizmeher Maktab.	
1	Muhammad Khalilur Rahman	II
2	Md. Nurul Haq	II

	Name of candidate.	Division.
	Panchai Maktab.	
1	Muhammad Abu Bakr Siddiqur Rahman	II
	Rajargaon Maktab.	
1	Upendra Chandra Pal (E)	I
2	Kunja Mohan Sil (E)	I
3	Indra Mohan Sil	II
4	Abdul Majid (E)	II
5	Nawabali (E)	II
6	Rangalal Basak (E)	II
7	Santosh Kumar Sur (E)	II
	Suapara Maktab.	
1	Muhammad Ramzanali	I
2	Abdul Ghani	II
	Tamta Maktab.	
1	Alimuddin Majumdar	II
2	Chand Mian Bhuiyan	II
3	Ramjanali	II
	Barkul Board Primary School.	
1	Gaurkishore Saha (E)	II
	Bemaia Maktab.	
1	Munsurali	I
	Lodhpara Maktab.	
1	Elahi Baksh	II
	Kakairtala Maktab.	
1	Muhammadullah (E)	I
2	Abdur Rahman	II
	Naringpur Maktab.	
1	Shamsul Haq (E)	II
2	Abdul Karim	II
3	Abdul Khaleq	II
4	Muhammad Ismail	II
5	Ayubali	II
6	Ali Azam (E)	II
7	Shishu Ranjan Datta (E)	II
	Khilpara Maktab.	
1	Prangopal Debnath	I
2	Jogendra Chandra Debnath	II
	Nohata Board Primary School.	
1	Kulsum Bhanu	I
	Noagaon Board Primary School.	
1	Golap Jehan (E)	I
	Shuapara Maktab.	
1	Jaigun (E)	I
	Naringpur Maktab.	
1	Rahima Khatoon (E)	I
2	Faizunnessa	I
	Majhigacha Maktab.	
1	Kutu Mian Sarkar	II
2	Abdul Hakim Patwari	I
	Bitara School.	
1	Arjun Chandra Nama	I
2	Abinash Chandra De	II
	Manpura Board Maktab.	
1	Hafizuddin	II
2	Delwar Husain	II

	Name of candidate.		Division.
	Kadla Maktab.		
1	Habibullah	..	I
2	Shukatali	..	II
3	Abdul Hashem	..	II
4	Abdul Hakim	..	II
	Bhuiyara Board L. P. School.		
1	Ali Abkar		II
	Palakhal School.		
1	Abdus Sattar Mian	..	II
	South Aliara School.		
1	Abdus Subbhan	..	II
2	Debendra Chandra Saha	..	II
	Dowti School.		
1	Jatindra Mohan Sarkar	..	I
	Gohat Maktab.		
1	Habibullah (E)	..	II
	Fatehpur School.		
1	Manindra Chandra Bhattacharjee (E)	..	II
	East Ujani Maktab.		
1	Muhammad Muslem Kazi (E)	..	II
2	Muhammad Siddiqur Rahman (E)	..	II
	West Ujani School.		
1	Sanatan Chandra Dhar	..	II
	Tetaia Maktab.		
1	Abdul Ghani	..	II
	Kachua Maktab.		
1	Afzalur Rahman (E)	..	I
2	Mustauddin (E)	..	II
3	Abdul Ghani	..	II
	Komarkata Maktab.		
1	Maniruddin Mian	..	I
	Monoharpur Maktab.		
1	Afizuddin Sarkar (E)	..	I
2	Jamila Khatoon (E)	..	I
	Kadirkhil Maktab.		
1	Janabali Majumdar	..	I
2	Yaqubali Patwari	..	II
	Baichara Maktab.		
1	Afizuddin (E)	..	II
	Noakandi Maktab.		
1	Muhammad Abdul Jalil	..	II
2	Muhammad Tayebali	..	II
	Bhararua Maktab.		
1	Muhammad Sujatali Sarkar (E)	..	I
2	Muhammad Abdul Majid Sarkar (E)	..	II
3	Muhammad Tafazzul Husain (E)	..	II
4	Muhammad Abdul Majid Mian (E)	..	II
	Aligi Panchgaon Maktab.		
1	Nur Muhammad (E)	..	I
2	Abdur Rashid (E)	..	I
	Ketua Maktab.		
1	Upendra Chandra De (E)	..	II
2	Abdul Hamid	..	II

	Name of candidate.		Division.
	Bharangarchar Maktab.		
1	Kutub Haq Mian (E)	..	II
	Rajapur Panchgaon Maktab.		
1	Abdul Latif (E)	..	II
	East Hanarchar Primary School.		
1	Hafizuddin	..	II
2	Abdul Halim Patwari (E)	..	I
3	Abdus Sattar Khan	..	II
4	Ali Ashraf	..	II
	Hanarchar Board Primary School.		
1	Gopalchandra De (E)	..	I
2	Purnachandra De (E)	..	II
3	Ajit Ranjan Dutta Gupta (E)		II
	Sadullahpur Maktab.		
1	Saiyedali Khan (E)	..	I
	Char Korawa Maktab I.		
1	Waliullah (E)	..	II
2	Nur Mohammad Sarkar (E)	..	II
	Harina Primary School.		
1	Nitya Gopal Majumdar	..	II
	Bishnupur Primary School.		
1	Abdul Aziz (E)	..	II
2	Yaqubali (E)	..	II
	Bishnudi Primary School.		
1	Kunja Behari Das	..	I
2	Radhika Mohan Saha	..	II
3	Madhusudhan Saha	..	I
	Chandpur Brajanath Pathsala.		
1	Naresh Chandra Basu (E)	..	I
2	Mujiruddin Ahmad (E)	..	I
3	Manindra Chandra Deb (E)	..	I
4	Manindra Kumar Das (E)	..	I
5	Satish Chandra Majumdar (E)	..	I
6	Jajneswar Kapali (E)	..	I
7	Khagendra Chandra Das (E)	..	I
	Jafarabad Primary School.		
1	Madhusudan Gope (E)	..	II
2	Chintaharan Gope (E)	..	II
3	Amiyabala Nandi (E)	..	II
	Khalishaduli Primary School.		
1	Kedareswar Adhikari	..	II
2	Bireswar Adhikari	..	II
3	Harendra Kumar Pal	..	II
	Gharua Maktab.		
1	Abdul Ghani (E)	..	II
	Charkrishnapur Primary School.		
1	Jogesh Chandra Sil (E)	..	II
2	Ayubali (E)	..	II
	East Kamalapur Maktab.		
1	Abdur Rashid Khan	..	II
	North Algi Maktab.		
1	Umarali (E)	..	II
2	Abdul Ghafur (E)	..	II
3	Nityananda Debnath (E)	..	II

	Name of candidate.		Division.
	South Algi Maktab.		
1	Muhammad Ershad Mian	..	II
2	Manu Mian	..	II
	Charpura Mukh Maktab.		
1	Ali Ahmad (E)	..	II
	East Dashadi Primary School.		
1	Nitya Gopal Acharjee (E)	..	II
2	Azizur Rahman Talukdar	..	II
3	Abdul Latif Talukdar (E)	..	II
4	Idrisali Talukdar (E)	..	II
	Paikastha Maktab.		
1	Khalilur Rahman Patwari	..	II
	Baburhat Primary School.		
1	Abdur Rauf Mian (E)	..	I
2	Nazul Haq Mian	..	II
	Nishikanta Primary School, Chandpur.		
1	Saha Muhammad Amirali (E)	..	II
2	Muhammad Alauddin Chaudhury (E)	..	II
	Shekherhat Primary School.		
1	Upendralal Saha (E)	..	I
2	Ahmadali Gazi	..	II
	Sreerandi Primary School.		
1	Nityagopal Das (E)	..	II
	Shakhdi Primary School.		
1	Upendramohan Ray	..	II
	Sahebganj Maktab.		
1	Muhammad Abdul Latif (E)	..	I
2	Syed Ahmad	..	II
	Daichara Maktab.		
1	Nawabali (E)	..	II
2	Zobaidali (E)	..	II
3	Shamsul Haq Khan (E)	..	I
4	Anwarali (E)	..	II
5	Khorshed Husain Chaudhury (E)	..	II
6	Rahimuddin Sheikh (E)	..	II
7	Abdul Matin (E)	..	II
	Goatoba Maktab.		
1	Maniruddin	..	II
2	Ayubali, I	..	II
3	Mamtazuddin	..	II
4	Muhammad Idris	..	II
5	Shasheruddin	..	II
6	Abdul Khaleq	..	II
7	Shafiullah	..	II
8	Altafali	..	II
9	Khalilur Rahman	..	II
	Phanishair Maktab.		
1	Ahmad Mian (E)	..	I
2	Nurul Haq Sardar	..	II
3	Jinnatun-Nesa (E)	..	II
4	Imam Husain	..	II
5	Mukhlesur Rahman Patwari	..	II
	Balithuba Maktab.		
1	Muhammad Sorajul Haq (E)	..	II
2	Muhammad Muslim (E)	..	II
3	Kobbadali Bhuiyan (E)	..	II
4	Anwarullah (E)	..	II
5	Abdul Jalil Ukil (E)	..	II
6	Mobarakali Talukdar (E)	..	II
7	Abdul Mannan (E)	..	II

	Name of candidate		Division.
	Sharkhal Maktab.		
1	Abu Horra (E)	..	II
2	Ahmadullah (E)	..	II
3	Muhammad Musa (E)	..	II
	Mulapara Maktab.		
1	Muhammad Idris Khan (E)	..	I
2	Tafazzul Husain Tapadar (E)	..	I
3	Abdul Ghani Khan (E)	..	II
	Shashichar Maktab.		
1	Shamsul Islam Chaudhury (E)	..	I
2	Mafiuddin Chaudhury (E)	..	II
3	Shamsul Islam (E)	..	II
4	Syedali	..	II
5	Shamsul Haq	..	II
6	Saira Khatoon (E)	..	II
	Debipur Maktab.		
1	Serajul Haq	..	II
2	Abul Qasem	..	II
	Tora Munshirhat Maktab.		
1	Abdul Matin Patwari	..	II
	Chandpur Maktab.		
1	Abdul Malek (E)	..	I
2	Abdul Ghafur (E)	..	II
	Ekhlaspur Maktab.		
1	Asadullah	..	II
2	Ali Ahmad (E)	..	II
	Middle Bishkatali Maktab.		
1	Muhammad Yunus (E)	..	I
2	Abdul Halim Bhuiyan (E)	..	II
3	Akkas Mian	..	II
4	Jagadish Chandra Das (E)	..	II
	Chardhukhia Maktab.		
1	Abdul Karim Patwari (E)	..	II
	Char Rampur Maktab.		
1	Rustamali (E)	..	II
2	Nawabali (E)	..	II
3	Muhammad Hazel (E)	..	II
	North Char Barali Maktab.		
1	Abdur Rauf Mian	..	II
	Rupsha Free Maktab.		
1	Abdus Subhan (E)	..	II
2	Idris Mollah (E)	..	II
	Govindapur Maktab.		
1	Azizur Rahman	..	II
2	Lutfur Rahman	..	II
3	Hamidur Rahman	..	II
	Domoria Maktab.		
1	Nana Mian	..	II
2	Kala Mian	..	II
	Gabdargaon Board Primary School.		
1	Kalipada Chakravarti (E)	..	II
2	Robindra Chandra Majumdar (E)	..	II
3	Ramesh Chandra Shil (E)	..	I
4	Syedali	..	II
	Larirchar School.		
1	Sachindra Mohan Das (E)	..	I
2	Krishna Gopal Das (E)	..	II

	Name of candidate.	Division.
	West Alwania School.	
1	Sekandar Mian	.. II
2	Tarini Kumar Das	.. II
	East Alwania School.	
1	Nitya Gopal Majumdar (E)	.. II
	Barali Free School.	
1	Kalimullah (E)	.. I
2	Alfazuddin (E)	.. II
3	Hasanali (E)	.. II
4	Abdul Latif (E)	.. II
5	Mokramali (E)	.. II
6	Mahiuddin Patwari (E)	.. II
7	Abdul Khaleq (E)	.. II
8	Sona Mian	.. II
	Sinhergaon Primary School.	
1	Abdur Rashid (E)	.. I
2	Abdur Rahman (E)	.. I
3	Salamatullah (E)	.. II
4	Abdul Jalil (E)	.. II
	Rampur Primary School.	
1	Mani Bhusan Basu (E)	.. II
	Ghania School.	
1	Nur Muhammad	.. I
2	Muhammad Ismail	.. I
3	Kashemali	.. I
4	Bisweswar Rudra Pal	.. I
5	Mohan Banshi Rudra Pal	.. II
6	Arjuneswar Rudra Pal	.. II
7	Nitai Chandra Rudra Pal	.. II
8	Abdus Subhan	.. II
9	Abdul Halim	.. II
	Paikpara Board School.	
1	Subodh Chandra Majumdar (E)	.. I
2	Nani Gopal Datta (E)	.. I
3	Binay Bhusan Chakravarti (E)	.. I
4	Chitta Ranjan De (E)	.. I
5	Abdur Rashid Bhuiyan (E)	.. I
6	Karuna Kumar Pal (E)	.. I
	Sachawmog Primary School.	
1	Yusufali (E)	.. II
2	Nitya Gopal Saha (E)	.. II
	Lakshmipur Primary School.	
1	Rajendra Chandra Acharjee	.. I
2	Sayedur Rahman	.. I
3	Chinta Haran Acharjee	.. II
4	Rasharanj Acharjee	.. II
5	Raiharan Acharjee	.. II
	Kashara Primary School.	
1	Salamatullah (E)	.. I
2	Abdul Jalil (E)	.. II
3	Abdul Khaleq (E)	.. I
4	Ali Akabbar (E)	.. I
5	Abdul Ghafur (E)	.. I
6	Lami Mian (E)	.. I
7	Shamsul Haq (E)	.. I
8	Judhisthir Kumar Das	.. I
9	Rajmohan Das (E)	.. II
10	Khalilur Rahman	.. II
11	Mahabbatali Mollah	.. II
12	Abdur Rashid Pathan	.. II
	Digaldi Primary School.	
1	Nani Gopal Pal (E)	.. II
2	Chandra Sagar Debnath (E)	.. II

	Name of candidate.	Division.
	Sreekalia Primary School.	
1	Faziluddin Shaikh (E)	.. II
2	Abdur Rashid (E)	.. I
	Pratashi Harina Primary.	
1	Haripada Ghosh (E)	.. I
2	Abdul Wadud	.. II
	Hasha Board School.	
1	Chand Mian	.. I
2	Rafizuddin Khan	.. II
3	Jamshed Khan	.. I
4	Khalilur Rahman Meer	.. II
5	Habibullah Patwari	.. I
	Jatrapur Board School.	
1	Satish Chandra Sutradhar (E)	.. I
2	Abdul Aziz (E)	.. II
3	Abdur Rahim (E)	.. II
4	Abdul Qader (E)	.. II
	Paharpur Board School.	
1	Harimohan Kapali	.. II
	Chinair Board School.	
1	Fazlul Bari Chaudhury (E)	.. II
	Fatehpur Board School.	
1	Murtezali Kakur	.. II
	Singerbil Primary School.	
1	Manindra Mohan Karmakar (E)	.. I
	Madhyapara Primary School.	
1	Haridhan Kar (E)	.. II
2	Sachindra De (E)	.. II
3	Krishnadhan Pal (E)	.. II
4	Sankar Chandra Pal (E)	.. II
5	Amarchand Saha (E)	.. II
	Merura Primary School.	
1	Hiralal Bhattacharjee (E)	.. I
	Ulchapara Primary School.	
1	Haricharan Debnath (E)	.. I
2	Rajmohan Debnath (E)	.. II
	Badeharia Primary School.	
1	Monomohan Chaudhury (E)	.. I
2	Kamalkanta Sarma (E)	.. II
	Narsingsar Maktab.	
1	Abdur Rashid (E)	.. I
2	Ali Husain (E)	.. I
3	Ibrahimali (E)	.. I
4	Muhammad Rafiqul Islam (E)	.. II
5	Matiur Rahman (E)	.. II
6	Soleiman Ahmad (E)	.. II
	Kenduai Maktab.	
1	Akramali (E)	.. II
2	Bahadurali (E)	.. II
	Araishida Maktab.	
1	Abdul Hakim (E)	.. II
2	Abdul Mataleb (E)	.. II
3	Abdur Rashid (E)	.. II

	Name of candidate.	Division.
	Charchartala Maktab.	
1	Nurul Islam (E)	II
2	Serajuddin Ahmad (E)	II
3	Abdul Mataleb (E)	II
	Baraharan Maktab.	
1	Muslim Mian (E)	II
	Gangihata Maktab.	
1	Rahima Khatoon (E)	I
	Kalikutcha Board Primary School.	
1	Harendra Chandra Saha (E)	I
2	Brajendra Kishore Saha (E)	I
3	Kazi Mukhlesur Rahman (E)	II
4	Anil Chandra Debnath (E)	I
	Sahabazpur Primary School.	
1	Dhirendra Chandra De (E)	I
2	Kartik Kumar De (E)	II
3	Shakhi Charan Saha (E)	II
4	Jatindra Chandra Bhaumik (E)	II
5	Abdul Latif (E)	II
	Goalnagar Primary School.	
1	Aftabuddin	I
2	Aminul Haq	II
	Haripur Primary School.	
1	Jaygopal Saha	I
	Sholabari Maktab.	
1	Abu Muhammad (E)	I
2	Habibur Rahman (E)	II
	Chhatipara Primary School.	
1	Satish Chandra Bardhan (E)	II
2	Benodebehari Bardhan (E)	II
3	Shakhi Charan Bhaumik (E)	II
4	Jogesh Chandra Ray (E)	II
	Noorpur Board Primary School.	
1	Maju Mian	I
2	Indubhusan Bhattacharjee	I
	Tonki Board School.	
1	Abdus Samad	II
	Taltala Maktab.	
1	Abdur Rahman (E)	II
2	Tajul Islam (E)	I
3	Abdur Rauf Bhuiyan (E)	II
	Nayanpur Board School.	
1	Muhammad Idris (E)	II
2	Monomohan Debnath (E)	II
	Manionda U. P. School.	
1	Sachindra Chandra Sil (E)	II
2	Dhirendra Chandra Chakravarti (E)	II
3	Kamini Kumar Das (E)	II
4	Debatosh Das Neogi (E)	II
5	Mayamaya Rudra Pal (E)	II
	Mogra U. P. School.	
1	Harendra Chandra Datta (E)	II
2	Manindra Chandra Acharjee (E)	II
	Badair U. P. School.	
1	Prangopal Debnath (E)	I
2	Radhakanta Chaudhuri (E)	I
3	Ameer Husain (E)	I

	Name of candidate.	Division.
	Amodabad U. P. School.	
1	Nanigopal Saha (E)	II
	Bayek Board School.	
1	Narendranath Chakravarti (E)	II
	Chandipur Board School.	
1	Abdus Samad (E)	I
2	Sachindra Chandra Chakravarti (E)	II
3	Amulya Ratan Banik (E)	II
4	Jogesh Chandra Banik (E)	II
	Dharmapur U. P. School.	
1	Rabindra Kumar Chakravarti (E)	II
2	Jamini Kumar Sen (E)	II
	Austajangal Maktab.	
1	Md. Fazlur Rahman Bhuiyan (E)	II
2	Md. Abdul Ghafur (E)	II
	South Ramdhannagar Maktab.	
1	Md. Ali Husain (E)	II
	Jamuna Board Maktab.	
1	Mamtazali	II
2	Md. Yusuf	II
3	Abdul Latif	II
	Kharampur Maktab.	
1	Salauddin Chaudhury (E)	I
2	Kazi Reazuddin Khadem (E)	II
3	Syed Abdur Rashid (E)	II
4	Afzal Husain Bhuiyan (E)	II
5	Abu Jahar (E)	II
6	Muhammadali Khadem (E)	II
	Satparia Board School.	
1	Shamsul Haq (E)	II
2	Abdul Jalil (E)	II
	Ekhlashpur Board School.	
1	Emdadullah (E)	I
	Fatehpur Board School	
1	Muhammad Abdul Qader Dewan (E)	II
2	Muhammad Safiuddin Chaudhury (E)	II
3	Muhammad Abdul Jalil Chaudhury (E)	II
	Razurkandi Board School.	
1	Shamsul Haq Bhuiyan	I
2	Abdul Qader	II
3	Shamsul Haq	II
	Naogaon Board School.	
1	Abdul Majid	II
2	Meherali	II
3	Monohar Chandra Sil	II
	Uddhamdi Board School.	
1	Ramesh Chandra Sarkar	II
2	Maharaj Barhai	II
	Hanirpar Primary School.	
1	Md. Fazlul Karim (E)	II
2	Md. Abul Bashr (E)	II
3	Aminuddin (E)	II
	Nabipur Primary School.	
1	Md. Abdul Mannaf (E)	II
2	Md. Abdul Manaf Fakhir (E)	II
3	Ambia Khatoon	II
4	Amena Khatoon	I

	Name of candidate.	Division.
	Nandurkandi Primary School.	
1	Raiharan Sarkar (E)	I
2	Mangal Chandra Sarkar (E)	I
	Bakra Primary School.	
1	Radhaballav Sutradhar (E)	I
2	Rajendra Chandra Sutradhar (E)	II
	Satakibazar Primary School.	
1	Dil Muhammad Mian (E)	I
2	Baikuntha Chandra Barman	II
	Upadhi Free Primary School.	
1	Md. Ali Akbar (E)	I
2	Abdul Hamid (E)	II
3	Muminali (E)	II
4	Yunusali (E)	II
5	Wazirali	II
6	Roshanali	II
7	Ali Abbas (E)	II
	Baishpur Primary School.	
1	Jagadish Chandra Majumdar (E)	I
2	Ramesh Chandra Sukladas (E)	I
3	Haripada Das (E)	I
4	Narayan Chandra Das (E)	II
5	Jnanendra Chandra Pal (E)	I
6	Prankumar Sarkar (E)	I
7	Purna Chandra Gope (E)	I
8	Milandas Sarkar (E)	II
9	Basanta Kumar Das (E)	II
10	Biyakrishna Pal (E)	I
11	Saadat Husain (E)	I
12	Dud Mian (E)	II
13	Keramatali (E)	II
14	Jinnatali (E)	I
15	Noor Bakhsh Sarkar (E)	II
16	Lal Miyan (E)	I
17	Noor Mian (E)	II
18	Salimuddin Sarkar (E)	I
19	Nawabali Patwari (E)	I
20	Abdul Mannan (E)	I
21	Ali Ahmad (E)	II
22	Braja Mohan Saha (E)	I
23	Satish Chandra Saha (E)	II
24	Biswapati Poddar (E)	I
25	Premananda Saha (E)	I
	Matupi Primary School.	
1	Md. Nazirullah (E)	II
2	Abdul Majid Bhuiyan (E)	II
	Char Pathalia Primary School.	
1	Kshirode Mohan Das	I
2	Rai Haran Sarkar	I
3	Chinta Haran Biswas	I
4	Prafulla Chandra Bhaumik	I
	Ghilatali Primary School.	
1	Rajani Kanta Bal	I
2	Prafulla Kumar Bal	II
3	Gopal Chandra Sutradhar	II
	Achalshila Primary School.	
1	Ramani Mohan Mahattam (E)	II
	Shatnal Primary School.	
1	Abdur Rab	II
	Shatnal Bazar Primary School.	
1	Purna Chandra Barman (E)	II
	Khidirpur Primary School.	
1	Nikhil Chandra Pal	I
	Nayergaon Primary School.	
1	Manindra Chandra Das	I

	Name of candidate.	Division.
	Nasirarkandi Primary School.	
1	Hazaratali (E)	I
2	Dalilur Rahman (E)	II
	Shikairkandi Primary School.	
1	Keramatali Mian	II
	Lamchari Primary School.	
1	Sukumar Adhikari	I
2	Lalchand Kirtania	II
3	Prahllad Chandra Bepari	II
4	Monohar Sarkar	II
5	Navadwip Chandra Sarkar	II
	Dashpara Primary School.	
1	Upendra Chandra De	I
2	Fazarali Sarkar (E)	I
3	Girish Chandra Sutradhar (E)	I
4	Amritalal Das	II
5	Krishna Chandra Saha (E)	I
6	Sudhir Chandra Saha (E)	I
7	Atindralal Saha (E)	I
8	Nitya Gopal Saha (E)	II
9	Chunilal Saha (E)	I
10	Makhanlal Saha (E)	II
	Dhalaitali Maktab.	
1	Md. Omarali	II
2	Abdul Latif Bakaul, I	II
3	Abdul Latif Bakaul, II	II
	Naogaon Maktab.	
1	Md. Sujaatali	II
2	Md. Abdul Jalil	II
3	Hasan Banu	I
4	Abdul Mataleb Patwari	II
	Kalipura Maktab.	
1	Abdul Haq Ghazi (E)	II
2	Abdul Hakim Dewan (E)	II
3	Abdul Ali Dewan (E)	II
	Sopaikandi Maktab.	
1	Imanali (E)	II
	Jahirabad Maktab.	
1	Md. Aftabuddin	II
2	Md. Abdus Sattar (E)	II
3	Md. Sarbatali	II
	Kalashbhanga Maktab.	
1	Abdul Latif (E)	I
2	Abdul Karim (E)	I
3	Muzaffarali (E)	II
4	Afizuddin (E)	II
5	Md. Wali Bakhsh	II
	North Ramdaspur Maktab.	
1	Taherali (E)	II
2	Ahmadali Mian (E)	II
	Mandartali Maktab.	
1	Abdul Hamid Hawladar (E)	I
2	Meer Abdur Rab (E)	II
3	Abdul Hamid (E)	II
4	Abdul Jalil Dowan (E)	II
5	Sultan Ahmad (E)	II
	Pathanchak Maktab.	
1	Md. Sultan (E)	II
	Khaguria Maktab.	
1	Rajabali	II
2	Abdul Aziz	II

	Name of candidate.		Division.
	Char Kalia Mollakandi Maktab.		
1	Abdul Wadud	..	II
2	Tamizuddin Mollah	..	II
3	Samirunnesa	..	II
	Jorkhali Maktab.		
1	Serajul Islam (E)	..	II
2	Jalaluddin (E)	..	II
3	Sultan Baksha (E)	..	II
4	Muksudali (E)	..	II
	Durgapur Maktab.		
1	Md. Tamizuddi (E)	..	I
2	Md. Abdus Samad (E)	..	II
3	Taherali (E)	..	I
	Dhakirgaon Maktab.		
1	Chand Mian	..	II
2	Kafiluddin	..	I
3	Arabennesa	..	I
4	Abdul Mannan	..	I
	Payali Maktab.		
1	Asmatunnesa	..	I
	Charmashua Maktab.		
1	Md. Muzaffarali (E)	..	I
2	Md. Abdur Rab (E)	..	II
	Nichintapur Maktab.		
1	Abdul Latif (E)	..	I
2	Yaqubali	..	II
	Telimashuakhal Maktab.		
1	Md. Fariduddin	..	II
	Baragaon Maktab.		
1	Sekandarali (E)	..	II
2	Ali Arshad Patwari (E)	..	I
3	Jaharali Miji (E)	..	I
4	Abidali Pradhania (E)	..	II
5	Haidarali Pradhania (E)	..	II
	Otarchar Maktab.		
1	Sadekali	..	II
2	Salamatullah	..	I
3	Abdul Ghani	..	I
	Khadergaon Maktab.		
1	Lalitmohan Goldar (E)	..	II
2	Monohar Goldar	..	II
3	Afizuddin	..	II
4	Maqbul Ahmad	..	II
5	Md. Marfatali (E)	..	II
6	Abdur Razzaq (E)	..	II
7	Sahazuddin (E)	..	II
	Shyamnagar Maktab.		
1	Joharali (E)	..	II
2	Chunu Mian (E)	..	II
	Majleshpur Maktab.		
1	Abdus Samad	..	II
	Aswinpur Maktab.		
1	Abdul Ghafur (E)	..	II
2	Abdus Samad, I	..	II
3	Abdul Jalil (E)	..	I
4	Abdus Samad, II (E)	..	II
5	Abdur Rahman (E)	..	II
6	Dud Mian	..	II
	East Islamabad Maktab.		
1	Md. Serajul Islam (E)	..	II

	Name of candidate.		Division.
	Nandikhala Maktab.		
1	Md. Ruhul Amin	..	I
2	Abdul Hamid	..	I
3	Abdul Mannan	..	I
4	Charu Mian	..	I
5	Md. Seraj Mian	..	I
6	Matiur Rahman	..	II
7	Siddiqur Rahman	..	II
8	Abdul Hamid Miayan	..	II
	Saadullahpur Maktab.		
1	Aftabuddin Mollah	..	II
	Lakshimpur Maktab.		
1	Md. Sayedali	..	II
2	Md. Ali Akbar	..	II
	Naujan Maktab.		
1	Abdul Aziz	..	I
2	Mamtazuddin Sarkar	..	II
	Baburpara Maktab.		
1	Md. Abdul Qader Mian (E)	..	II
2	Md. Ali Akbar (E)	..	II
3	Md. Bakshali (E)	..	II
	Binandapur Maktab.		
1	Bazlur Rahman (E)	..	II
2	Sokatali (E)	..	II
	Sreebardi U. B. School.		
1	Md. Ibrahim	..	I
2	Hedayetullah	..	I
	Latardi Maktab.		
1	Abdul Mannan Khan	..	II
	Narayanpur Maktab.		
1	Abdul Hakim (E)	..	II
2	Noor Bakhsha Dhali (E)	..	II
	Andhara Maktab.		
1	Md. Hafizuddin	..	I
	North Naori Maktab.		
1	Saleha Khatoon (E)	..	I
	Ghorhadhari Maktab.		
1	Abdul Mannan Pradhania	..	I
2	Fazlur Rahman Patwari	..	I
3	Md. Jalaluddin	..	II
4	Abdur Razzaq	..	II
5	Hashmatun-nesa	..	I
	Kasiara Khidirpur Maktab.		
1	Md. Sekandarali Patwari	..	I
2	Abdur Rahman Patwari (E)	..	I
3	Md. Yasin Patwari (E)	..	II
	Badarpur Maktab.		
1	Abdul Ghafur Patwari	..	II
2	Faizuddin Pradhania (E)	..	II
	South Barachar Maktab.		
1	Md. Fazlur Rahman (E)	..	I
2	Jahirul Haq (E)	..	II
3	Afsaruddin Ahmad (E)	..	II
4	Md. Serajul Haq (E)	..	I
5	Amjuman Ara (E)	..	I
6	Omatunnesa (E)	..	I
7	Halima Khatoon (E)	..	I
8	Md. Maqsudali (E)	..	I

	Name of candidate.		Division.
	Mukhteerkandi Maktab.		
1	Lakshman Chandra Debnath (E)	..	II
2	Ali Mian (E)	..	II
3	Akramali Khan (E)	..	II
4	Hazaratali (E)	..	II
	Mathabhanga Maktab.		
1	Gol Baksha (E)	..	I
2	Qudrutullah (E)	..	I
	Kallarchar Maktab.		
1	Abdul Karim	..	I
2	Abdul Majid	..	II
3	Kifatali	..	I
4	Baksha Ali	..	II
5	Abdus Sattar	..	II
6	Samena Khatoon	..	I
	Char Webster Maktab.		
1	Md. Abdul Qader	..	II
	Nasirarkandi Maktab.		
1	Annada Kumari Sarkar (E)	..	I
2	Aswini Kumar Sarkar (E)	..	II
	Imampur Maktab.		
1	Abdul Jalil Khan (E)	..	II
2	Md. Amir Husain	..	II
	Dighaldi Maktab.		
1	Md. Sabidali (E)	..	I
2	Md. Tarafali (E)	..	II
3	Md. Khalilur Rahman	..	II
	Panchani Maktab.		
1	Badarunnesa (E)	..	I
2	Abdul Wazed (E)	..	II
	Uttar Hawla Maktab.		
1	Durganath Rakshit (E)	..	I
2	Khalilur Rahman	..	II
3	Katu Mian (E)	..	II
4	Abdul Gaffar (E)	..	II
	Shanichoe Maktab.		
1	Saleha Khatoon	..	II
	Betagaon Maktab.		
1	Md. Shaukatali (E)	..	II
	Baratula Maktab.		
1	Mahabbatali	..	II
	Kachi Primary School.		
1	Idris Mian	..	II
	Bhuschi Maktab.		
1	Satish Chandra Sutradhar	..	II
	Sohurain Maktab.		
1	Ashrafali (E)	..	I
2	Minnatali	..	II
	Lakshmipur Maktab.		
1	Abdul Hamid	..	II
	Elaish Board Primary School.		
1	Abdul Ghani	..	II
	Koar Board Primary School.		
1	Aswini Kumar Singha (E)	..	II
2	Jatish Chandra Singha	..	II

	Name of candidate.		Division.
	Aswadia Maktab.		
1	Md. Korbanali	..	II
	Mella Maktab.		
1	Abdul Wadud	..	II
2	Abdus Subhan	..	II
	Goaliara Maktab.		
1	Mafizur Rahman (E)	..	II
2	Abul Bashr (E)	..	II
3	Shafazuddin (E)	..	II
4	Mukhlesur Rahman	..	II
5	Siidiqur Rahman (E)	..	II
6	Wajhiullah (E)	..	II
	Durgapur Maktab.		
1	Ameer Husain	..	II
	Hatirpar Maktab.		
1	Abdur Rashid (E)	..	II
2	Ali Husain	..	II
	Kandirpar Primary School.		
1	Afzal Mian (E)	..	I
2	Anu Mian (E)	..	I
3	Kamini Kumar Das (E)	..	I
4	Rajchandra Das	..	II
5	Suryya Kumar Sil (E)	..	I
6	Mukhlesur Rahman (E)	..	II
7	Serajul Islam	..	II
8	Jogendra Kumar Das (E)	..	I
9	Ali Ahmad (E)	..	I
	Laksam Mission Primary School.		
1	Abdul Hadi (E)	..	II
	Mandirgaon Maktab.		
1	Tauhidur Rahman (E)	..	II
2	Nurul Husain (E)	..	II
3	Abdul Mannan (E)	..	I
	Elaich Board Primary School.		
1	Abdul Majid	..	II
2	Jalaluddin Majumdar	..	II
3	Ali Ahmad	..	II
	Kadaba Primary School.		
1	Subal Chandra De (E)	..	I
2	Satish Chandra Kar (E)	..	I
3	Govinda Chandra Das (E)	..	I
4	Idris Mian (E)	..	II
5	Monoranjan Naha (E)	..	II
6	Hemanta Kumar Sukladas (E)	..	II
7	Basanta Kumar Sukladas	..	II
8	Sultan Mian	..	II
	Shangirsar Board Primary School.		
1	Md. Ullah	..	II
2	Jainabun Nesa	..	II
	Narpati Maktab.		
1	Md. Ibrahim Bhuiyan	..	II
2	Md. Roushan Khan	..	II
3	Md. Idris Bhuiyan	..	II
4	Dar Baksha Majumdar	..	II
	Shakra Maktab.		
1	Abdul Bari Majumdar	..	II
2	Siddiqur Rahman	..	II
	Japua Maktab.		
1	Abdul Majid (E)	..	I
	Fulmuri Board School.		
1	Husainali (E)	..	II

	Name of candidate.		Division.
	Dhalua Board School.		
1	Suresh Chandra Sil	..	II
	Madanpur U. P. School.		
1	Mamtazuddin Ahmad (E)	..	II
	Moukara U. P. School.		
1	Manu Mian (E)	..	I
2	Ali Husain Kazi (E)	..	I
3	Surendra Kumar Majumdar (E)	..	I
4	Harimohan Saha (E)	..	II
	Goharua Board School.		
1	Chand Mian (E)	..	II
	Baiara Maktab.		
1	Araber Rahman	..	II
	Sundail U. P. School.		
1	Maqsuder Rahman (E)	..	II
2	Jagadish Chandra Datta (E)	..	II
	Raikot U. P. School.		
1	Dwarika Mohan Nath (E)	..	II
2	Robati Mohan Saha (E)	..	II
3	Sachindra Kumar Saha (E)	..	II
	Birchandranagar U. P. School.		
1	A. K. M. Mahiuddin Ahmad (E)	..	I
	Barikandi Maktab.		
1	Abdul Majid (E)	..	I
2	Abdul Hashem (E)	..	I
3	Ali Ahmad (E)	..	II
4	Md. Yunus (E)	..	II
	Thollakandi Maktab.		
1	Abdur Rauf (E)	..	II
2	Abdul Malek (E)	..	II
	Kadair Maktab.		
1	Md. Yunusali (E)	..	I
	Saharpar Maktab.		
1	Abdul Qader (E)	..	II
2	Matiur Rahman (E)	..	II
	Ahmadpur Maktab.		
1	Bhuban Mohan Debnath (E)	..	I
2	Jogesh Chandra Debnath	..	II
3	Shamsul Ghani (E)	..	I
4	Ramani Mohan Mandal (E)	..	I
5	Harendra Chandra Biswas (E)	..	I
	Sadakpur Board Primary School.		
1	Priyanath Chakravarti (E)	..	II
	Thollakandi Primary School.		
1	Jogesh Chandra Debnath (E)	..	II
	Kathalia Primary School.		
1	Prafulla Kumar Pal (E)	..	II
2	Matilal Pal (E)	..	II
	Gopalpur Board Primary School.		
1	Md. Yunus	..	I

	Name of candidate.		Division.
	Nasirabad Primary School.		
1	Faizur Rahman Khan (E)	..	I
2	Gholam Mawla Khan (E)	..	II
3	Abani Kumar Ray (E)	..	II
4	Shishir Kumar Nandi (E)	..	II
5	Kalipada Bhaumik (E)	..	II
6	Abdul Wadud (E)	..	II
7	Syed Abdul Hamid (E)	..	II
8	Ramchandra Kaibartadas (E)	..	I
	Bholachandi Primary School.		
1	Mukunda Chandra Biswas (E)	..	II
2	Altafali (E)	..	II
	Nabinagar Primary School.		
1	Upendra Chandra Chakravarti (E)	..	II
2	Jitendra Chandra Chakravarti (E)	..	II
3	Paresh Chandra Ray (E)	..	II
4	Wali Mian (E)	..	II
5	Abdul Hakim (E)	..	II
6	Nripendra Chandra Banik (E)	..	II
7	Abdul Malek (E)	..	II
8	Abdul Latif (E)	..	II
	Suhata Board Primary School.		
1	Amulya Charan Das (E)	..	I
2	Kshitish Chandra Saha (E)	..	II
	Rasullabad Board Primary School.		
1	Ali Afzal	..	II
2	Surendra Chandra Kaibartadas	..	II
	Hajipur Primary School.		
1	Md. Husain (E)	..	I
2	Abu Taher (E)	..	I
	Brahmanbata Maktab.		
1	Morfiz Ali	..	II
2	Khorshedali	..	II
	Baghaura Primary School.		
1	Kashinath Bhattacharjee (E)	..	I
	Pahartali Maktab.		
1	Zulfuqur Haidar (E)	..	I
2	Helaluddin Ahmad (E)	..	I
	Darikandi Maktab.		
1	Abdul Malek (E)	..	II
	Hasannagar Maktab.		
1	Abdul Ghani	..	II
2	Kazemuddin Ahmad	..	II
	Mahaddinagar Kadamtali Board School.		
1	Md. Nurul Islam (E)	..	II
2	Abdul Latif (E)	..	I
3	Abu Husain (E)	..	II
4	Abdus Samad	..	II
5	Abdus Subhan (E)	..	I
	Dharmapur East Maktab.		
1	Rahamali	..	II
	Radhanagar Board School.		
1	Md. Wahiduzzaman (E)	..	I
2	Md. Hafizuddin (E)	..	II
	Kanainagar Maktab.		
1	Md. Sanaullah	..	II
	Dashdona Board School.		
1	Nurul Islam Mian (E)	..	II
2	Abdul Awal Mian (E)	..	I
3	Raiharan Sarma (E)	..	I
4	Tarini Charan Debnath (E)	..	I

	Name of candidate.	Division.
	Salimabad Maktab.	
1	Abdur Rauf (E)	I
2	Abdus Sattar (E)	II
3	Abdul Ghafur (E)	II
	Baherchar Board School.	
1	Mulluk Husain	II
	Pahariakandi Board School.	
1	Muzaffar Husain	I
	Kanchanpur Maktab.	
1	Serajul Islam Khan (E)	II
	Charkumaria Board School.	
1	Abdus Subhan (E)	II
2	Solaiman Ali (E)	II
	Jagatpur Primary School.	
1	Dharanidhar Nath Bhaumik	II
2	Brajendra Chandra Nath Bhaumik	II
3	Nayebali (E)	II
4	Haidarali Sarkar (E)	I
	Bhauria Maktab.	
1	Abdul Matin	II
2	Hafizuddin Bhuiyan	II
3	Kazimuddin (E)	II
4	Akramali	II
	Jamalkandi Maktab.	
1	Md. Shahidullah (E)	II
	Chandgam Maktab.	
1	Abdul Quader	II
	Outbag Board School.	
1	Azizul Haq (E)	II
2	Santosh Kumar Sarkar (E)	II
	North Nasaraddi Maktab.	
1	Ali Amjad	II
2	Abdul Barik	II
	Bhatshala Maktab.	
1	Jainul Abedin	II
2	Niranjan Chandra Sukladas	II
3	Ambia Khatoon (E)	II
	West Kaodi Maktab.	
1	Abdul Aziz Bhuiyan (E)	II
	Baluchar Maktab.	
1	Abdur Rahman (E)	II
2	Md. Sadek (E)	II
3	Md. Yaqub (E)	II
	Sadardia Primary School.	
1	Amir Husain	II
2	Md. Ali	II
3	Abdul Qadir	II
	Khalilabad Maktab.	
1	Anwaruddin (E)	II
2	Nayebali (E)	II
	Kadamtali Maktab.	
1	Md. Shamsul Haq	II
	Rajapur Primary School.	
1	Manindra Chandra Barman (E)	II

	Name of candidate.	Division.
	Mollakandi Maktab.	
1	Abdul Jalil Sarkar (E)	II
2	Abdul Wahab (E)	II
	Jiurkandi Board School.	
1	Radharaman Saha	II
2	Santosh Chandra Bhumadas (E)	II
3	Devendra Chandra Saha (E)	I
4	Md. Sona Mian (E)	II
5	Chaitanya Chandra Saha (E)	II
	Baherchar Primary School.	
1	Matiur Rahman	II
	South Muhammadpur Primary School.	
1	Umesh Chandra Das	II
2	Ramani Mohan Das	II
3	Anil Chandra Das	II
	Baniapara Primary School.	
1	Nihar Ranjan Sur	II
	Nagerkandi Maktab.	
1	Sadatali (E)	II
2	Maqbul Ahmad	I
3	Shamsul Haq	II
4	Tabod Husain (E)	II
	Jagatpur Primary School.	
1	Feroza Khatoon (E)	I
2	Rabea Khatoon (E)	I
	West Kaodi Maktab.	
1	Jamila Khatoon (E)	II
	Baluchar Maktab.	
1	Asia Khatoon (E)	II
2	Aklima Khatoon (E)	I
	Sadardia Primary School.	
1	Shaharbhanu	II
	Tinpara Maktab.	
1	Lutfunnesa	I
	Bandarampur Board School.	
1	Fatima Khatoon	I
2	Ful Meher	I
	Lamchari Maktab.	
1	Ambia Khatoon (E)	II
2	Lutfunnesa (E)	II
3	Shamsunnesa (E)	II
	Hashanpur Maktab.	
1	Md. Serajul Haq	II
2	Yunus Mian (E)	II
3	Serajul Islam (E)	II
4	Azgharali (E)	II
5	Chandra Mohan Kuri (E)	II
	Talerchu Maktab.	
1	Shamsur Rahman (E)	II
2	Serajul Haq (E)	II
	Brahmanchar Maktab.	
1	Abdus Salam (E)	II
2	Abdul Hamid (E)	II
3	Elemjan (E)	II

	Name of candidate.		Division.
	Manikarchar Maktab.		
1	Shamsuddin Ahmad (E)	..	II
2	Md. Ilias (E)	..	II
3	Karpulbahar (E)	..	II
	Baghaiyakandi Maktab.		
1	Amjadali (E)	..	II
2	Abdul Ghafur (E)	..	II
3	Abdul Hakim (E)	..	II
	Shikhirgaon Maktab.		
1	Mujibur Rahman	..	II
	Anarpura Maktab.		
1	Md. Sanaullah Sikdar	..	II
2	Marfatali	..	II
3	Almasali	..	I
4	Sekandarali	..	II
	Ramnagar Maktab.		
1	Aftabuddin	..	II
2	Ali Husain	..	II
3	Abdul Jalil	..	II
	Chanderchar Maktab.		
1	Md. Abul Qasem (E)	..	II
2	Md. Asmatali (E)	..	II
3	Abdul Hamid (E)	..	II
	Pathaliakandi Maktab.		
1	Md. Khalilur Rahman (E)	..	II
2	Md. Abdul Mannan (E)	..	II
	Baidyanathpur Maktab.		
1	Alfazuddin	..	II
	Guagashia Maktab.		
1	Mizanur Rahman Khan (E)	..	II
	Nilokhi Board School.		
1	Suruj Mian (E)	..	II
	Munshi Mathabhanga Maktab.		
1	Meherun Nesa (E)	..	I
2	Amena Khatoon (E)	..	I
	Paikkarpar Maktab.		
1	Wali Mian	..	II
2	Amjad Husain	..	II
	Muhammadpur Board School.		
1	Abdul Qader (E)	..	II
2	Abdus Salam (E)	..	II
	Goshairchar Maktab.		
1	Kasimali Sikdar (E)	..	II
	Bhangarchar Primary School.		
1	Abidali (E)	..	II
2	Basudhakanta Mallik (E)	..	II
	Daulatpur Primary School.		
1	Mizanur Rahman (E)	..	I
2	Upendra Chandra Debnath (E)	..	I
3	Sachindra Chandra Gope (E)	..	II
	Dhanapatikhola Board School.		
1	Abdul Awal (E)	..	II
	Dhanjhara U.B. School.		
1	Nityananda Datta (E)	..	II
2	Makhanlal Datta (E)	..	II
3	Nibaran Chandra Nama (E)	..	II
4	Abdul Aziz (E)	..	II
	Bailghar Board School.		
1	Abdul Karim Sarkar	..	II
2	Abdur Rahim	..	II
	Bangora School.		
1	Harimohan Sutradhar (E)	..	II
2	Muazzemali (E)	..	I
	Pushkarnirpar Maktab.		
1	Abdul Awal (E)	..	II
	Saliakandi Primary School.		
1	Suruj Mian (E)	..	II
	Touki Board School.		
1	Abdul Ghani Mollah (E)	..	II
2	Jonabali Sarkar (E)	..	II
3	Yusufali	..	II
	Muradnagar Primary School.		
1	Fazlur Rahman (E)	..	II
	Nagerkandi Primary School.		
1	Upendra Chandra Majumdar (E)	..	I
	Noakhali District.		
	Khajuria Maktab.		
1	Muhammad Kamel	..	I
2	Muhammad Sulaiman	..	II
3	Ali Azam	..	II
4	Meherali	..	II
	Shibpur School.		
1	Azizullah (E)	..	II
2	Habibullah (E)	..	II
	Chhatrasamshad.		
1	Satyendra Kumar Chattopadhyaya (E)		II
2	Dwijendra Kumar Majumdar (E)	..	II
	Halahari Board School.		
1	Muzaffar Ahmad (E)	..	II
2	Mukhlesur Rahman	..	II
3	Muhammad Chaudhury	..	II
	Kalitara School.		
1	Mujibul Haq (E)	..	I
2	Syedul Haq (E)	..	II
3	Abdur Rahman (E)	..	I
	Maninagar School.		
1	Abdur Rashid (E)	..	II
	South Char Jabbar Maktab.		
1	Abdus Sattar (E)	..	I
2	Din Muhammad (E)	..	I
3	Mujibullah (E)	..	I
	Munipur U. P. School.		
1	Muhammad Sultan Mian (E)	..	I
2	Brajakishore Nath Adhikari (E)	..	I
3	Radha Roman Nath (E)	..	II
4	Rasharaj Nath (E)	..	II
5	Monmohan Gope (E)	..	II
6	Muhammad Aminullah (E)	..	II
7	Krishna Sundar Nath (E)	..	II
8	Satish Chandra Gope (E)	..	II

	Name of candidate.	Division.
	Neyamatpur School.	
1	Amritalal Nath (E)	I
2	Chandra Sagar Bhaumik (E)	II
3	Badsha Mian (E)	I
4	Bhajamohan Nath	II
5	Krishnahari Pal (E)	II
	Neajpur U. P. School.	
1	Lokman Mian	II
	Madla Maktab.	
1	Muhammad Jainul Abedin (E)	I
2	Md. Nurul Alam (E)	I
3	Hashmatullah (E)	II
4	Abdul Khaleq (E)	II
5	Badiul Alam	II
	Nalpur Free Primary School.	
1	Ali Ahmad (E)	I
2	Azizur Rahman (E)	I
3	Haridas Saha (E)	I
4	Nurul Haq (E)	I
5	Abdus Subhan (E)	II
6	Gaurmohan Nath (E)	II
	Fakirtala Primary School.	
1	Abul Bashr Siddiq Kasir Ahmad (E)	I
2	Md. Shafiullah (E)	I
3	Md. Kabir Ahmad (E)	II
4	Abdul Halim (E)	II
	Batagram Primary School.	
1	Muhammadullah, I (E)	I
2	Muhammad Rafiqullah (E)	I
3	Afzal Husain (E)	I
4	Maqbul Ahmad (E)	II
5	Shamsul Haq, I (E)	II
6	Md. Sultan Mian (E)	II
7	Shamsul Haq, II	II
8	Potash Chandra De (E)	II
9	Manindra Kumar Sil (E)	II
10	Md. Aminullah (E)	II
11	Md. Zobaidullah (E)	II
	Narattampur Maktab.	
1	Abdul Ghafur (E)	I
2	Abdul Hakim (E)	I
3	Fazarali (E)	II
4	Abu Bakr Siddiq (E)	II
5	Lutfe Ahmad (E)	II
6	Yaqubali (E)	II
7	Lutfur Rahman (E)	II
8	Chintaharan Bhuiyan (E)	II
9	Md. Mustafa (E)	II
10	Abdul Mannan (E)	II
11	Md. Jani Alam (E)	II
	Aichapara Kesharkhil Maktab.	
1	Tofail Ahmad (E)	II
2	Md. Muslim (E)	II
3	Mafizullah (E)	II
4	Rajabali (E)	II
5	Md. Imanali (E)	II
	Rafiqpur Maktab.	
1	Md. Noor Mian (E)	II
	Kashipur Primary School.	
1	Syed Bazlul Karim (E)	II
2	Nagendra Kumar Shil (E)	I
3	Haralal Saha	I
	Nityanandapur Primary School.	
1	Birendra Mohan Majumdar (E)	I

	Name of candidate.	Division.
	Karimpur Maktab.	
1	Md. Ali Karim (E)	II
2	Md. Nazir	II
3	Md. Nurul Haq	II
	Rafiqpur Primary School.	
1	Husain Ahmad (E)	I
2	Sachindra Kumar Bakshi (E)	I
3	Rabindra Kumar Bhaumik (E)	II
	Kashipur Maktab.	
1	Mansur Ali (E)	II
2	Aminaullah (E)	II
	Razullahpur Maktab.	
1	Muminullah (E)	I
2	Mamtazuddin Ahmad (E)	I
3	Md. Israil (E)	II
4	Kafiluddin Ahmad (E)	I
5	Abdus Subhan (E)	I
	Bholabadsha Primary School.	
1	Anwarali (E)	I
2	Gobinda Chandra Ghosh (E)	I
3	Kamala Kanta De (E)	I
4	Habibullah (E)	I
	Baraichatal Maktab.	
1	Ali Ahmad (E)	I
	Narattampur Primary School.	
1	Govinda Gopal Nath (E)	I
2	Harikrishna Gope (E)	I
3	Mujibul Haq(E)	II
4	Amulya Kumar Saha (E)	II
5	Dhirendra Kumar Saha (E)	II
6	Monmohan Saha (E)	II
7	Sitaharan Shaha (E)	I
8	Khagendra Kumar Saha (E)	II
9	Satyendra Kumar Acharjee (E)	II
10	Bhagirath Chandra Chakravarti (E)	II
11	Md. Sayeed (E)	II
12	Aswini Kumar Bhuiyan (E)	I
	Basikpur Primary School.	
1	Paresh Chandra Majumdar (E)	II
2	Sultan Ahmad (E)	II
3	Rustamali	II
	Majupur Primary School.	
1	Jatindra Kumar Das	II
2	Homanta Kumar Das	II
	Madanpur Primary School.	
1	Kamalakanta Patwari	II
	Charmandal Kaibarta Primary School.	
1	Achinta Kumar Baidya (E)	II
2	Mahendra Kumar Bain (E)	I
	Sukchar Primary School.	
1	Haripran Das	II
	Alladinagar Primary School.	
1	Nanigopal Sarma	II
	Bamni Board Primary School.	
1	Abu Nasr Waheeduzzaman (E)	I
2	Ali Ullah (E)	II
3	Suresh Chandra Chaudhury(E)	I
4	Nirode Ranjan Pal (E)	II
5	Bibhuranjan Bhaumik (E)	II

	Name of candidates.		Division.
	Golakpur Primary School.		
1	Jogesh Chandra Karmakar (E)	..	I
2	Harikumar Mali (E)	..	II
3	Gopal Chandra Majumdar (E)	..	II
	Char Ruhita Primary School.		
1	Md. Mafizul Islam (E)	..	II
2	Tajul Islam (E)	..	II
3	Nurul Islam	..	II
4	Habibullah (E)	..	II
	Charashai Primary School.		
1	Tanu Mian	..	II
2	Abid Mian	..	II
3	Sharafatullah	..	II
	Charchamita Primary School.		
1	Syamsundar Debnath (E)	..	II
2	Jogendra Kumar Namadas (E)	..	I
	Nadivpur Primary School.		
1	Ayubullah	..	II
2	Serajul Haq	..	II
3	Anwarullah (E)	..	I
	Gandharbapur Primary School.		
1	Durjaylal Bhatta (E)	..	I
2	Harimohan Pal (E)	..	II
	Nandanpur Maktab.		
1	Md. Ishaq Mian, I	..	I
2	Md. Hedayetullah (E)	..	I
3	Muhammad Muzaffar Ahmad (E)	..	I
4	Muhammad Ishaq Mian, II	..	II
5	Muhammad Hashmatullah	..	II
6	Muhammad Sultan Ahmad, I (E)	..	I
7	Muhammad Anwarul Haq	..	II
8	Muhammad Sultan Ahmad, II	..	II
9	Musammat Sufia Khatoon (E)	..	I
	Aburnagar Maktab.		
1	Muhammad Ziaul Haq	..	II
2	Muhammad Aminullah	..	II
	Neyamatpur Maktab.		
1	Muhammad Idris (E)	..	II
2	Abdur Rab (E)	..	II
	Ludhua Maktab.		
1	Abdur Rashid (E)	..	II
	South Denathpur Maktab.		
1	Abdul Haq (E)	..	II
2	Nur Muhammad	..	II
	Sonapur Maktab.		
1	Akhtaruzzaman (E)	..	II
2	Safiullah (E)	..	II
3	Muhammad Mian (E)	..	II
4	Sahadullah (E)	..	II
5	Azizullah (E)	..	II
	Shayestanagar Maktab.		
1	Sonaullah Khan (E)	..	II
	Keroa Maktab.		
1	Serajul Haq (E)	..	I
	North Rakhalia Maktab.		
1	Muhammad Mafazzul Husain	..	II
2	Mukhlesur Rahman	..	II

	Name of candidates.		Division.
	North Keroa Maktab.		
1	Harinarayan Nath (E)	..	II
2	Abdur Rashid	..	II
	Kuchiakhali Maktab.		
1	Rahamali Sikdar	..	II
	Kafilatali Maktab.		
1	Habibullah	..	I
	Masimnagar Maktab.		
1	Nabiullah (E)	..	II
2	Abidullah	..	II
	North Hamsadi Maktab.		
1	Madanmohan Nath (E)	..	II
	Shyamganj Maktab.		
1	Muhammad Taher (E)	..	I
2	Muminul Haq	..	II
	Char Ruhita Maktab.		
1	Korbanali	..	II
	Nandanpur U. P. School.		
1	Monmohan Bhaumik (E)	..	II
2	Atarer Rahman Patwari (E)	..	II
3	Sekandarali Pal (E)	..	II
	Masimpur Primary School.		
1	Abu Taiyab Md. Basirul Haq (E)	..	I
2	Harendra Kumar Nath (E)	..	II
3	Abdul Latif (E)	..	II
4	Birendra Kumar Pal (E)	..	I
5	Jatindra Kumar Das (E)	..	II
	Kachuri Primary School.		
1	Chittaranjan Chakravarti	..	II
2	Durga Prasanna Chakravarti (E)	..	II
3	Usharanjan Chakravarti	..	II
	Sonapur Primary School.		
1	Ramesh Chandra Chakravarti (E)	..	II
2	Hiralal Saha	..	II
3	Rajendra Kumar Banik	..	II
	Bhatialpur Primary School.		
1	Raimohan Majumdar	..	I
2	Birendra Kishore Bhaumik (E)	..	II
	Paniala Primary School.		
1	Aslam Mian (E)	..	II
	Kalchuma Maktab.		
1	Abdul Mannan (E)	..	II
2	Jainul Abedin (E)	..	II
3	Safiullah (E)	..	II
	Tobga Chhaiyani Maktab.		
1	Muhammad Ruhul Amin (E)	..	II
2	Muhammad Husain (E)	..	II
	Sonapur Maktab.		
1	Jainul Abedin (E)	..	II
2	Abdul Hai (E)	..	II
3	Abdul Majid (E)	..	II
	West Masimpur Maktab.		
1	Maqbul Ahmad (E)	..	II
2	Md. Yasin (E)	..	II
3	Hashmatullah (E)	..	II
4	Syed Ahmad (E)	..	II
5	Abdur Rab Zamadar (E)	..	II

	Name of candidate.	Division.
	Nagmud I Maktab.	
1	Fazlul Haq, I (E)	.. II
2	Habibullah (E)	.. II
3	Badrul Islam (E)	.. II
4	Fazlul Haq, II(E)	.. II
5	Mazharul Islam (E)	.. II
6	Abdul Matin (E)	.. II
	Noapara Maktab.	
1	Kalimullah (E)	.. II
2	Shamsul Haq (E)	.. II
3	Abdur Razzak (E)	.. II
4	Abdul Latif (E)	.. II
5	Afizuddin (E)	.. II
6	Abdul Aziz	.. II
7	Sudhanya Kumar Majumdar	.. II
	Bigha Primary School.	
1	Noor Ahmad Khan (E)	.. II
	Fatehpur Maktab.	
1	Yaqubali (E)	.. II
2	Serajul Haq (E)	.. II
3	Nurul Haq (E)	.. II
4	Mujibullah (E)	.. II
	Azharkalu Maktab.	
1	Mafizur Rahman (E)	.. II
2	Ghulam Rahman	.. II
	North Darbeshpur Maktab.	
1	Arshad Husain (E)	.. II
2	Mafizul Haq (E)	.. II
3	Noor Bakhsha Kazi (E)	.. II
4	Shafiqul Haq (E)	.. II
5	Abu Saiyad (E)	.. II
6	Badsha Mian (E)	.. II
	Muminpur Maktab.	
1	Md. Sultanali (E)	.. II
	Mogha Maktab.	
1	Md. Saiyadali (E)	.. II
2	Md. Ishaq (E)	.. II
	Shyampur Jakin Maktab.	
1	Badiul Alam Chaudhury (E)	.. I
	Harikrishnapur Maktab.	
1	Ibrahim Khalil (E)	.. II
2	Muhammad Yunus Mian (E)	.. II
	M. Songhua I Maktab.	
1	Md. Ahsanullah (E)	.. I
2	Md. Abdul Khair (E)	.. I
3	Md. Hedayetullah (E)	.. I
4	Md. Abdul Hashem (E)	.. II
	Fatehpur Maktab.	
1	Abdul Hashem (E)	.. II
	Sahazadpur Maktab.	
1	Munir Ahmad (E)	.. II
2	Azizur Rahman	.. II
	Parikole Maktab.	
1	Serajul Haq, I (E)	.. II
	North Jaynagar Maktab.	
1	Hashmatullah	.. I
2	Ali Akbar (E)	.. II
3	Rahim Baksha (E)	.. II

	Name of candidate.	Division.
	Chandpur Maktab.	
1	Maqbul Husain (E)	.. I
	South Arjuntala Maktab.	
1	Ataur Rahman (E)	.. I
2	Abdul Ghafur (E)	.. I
3	Serajul Islam (E)	.. I
	Bijbag Maktab.	
1	Abdul Haq (E)	.. I
2	Abu Bakr Siddiq (E)	.. I
3	Abdul Khaleq Chaudhury (E)	.. II
4	Mujibul Haq (E)	.. II
5	Dhanaranjan Dhupi	.. II
	Idilpur Maktab.	
1	Afzalur Rahman (E)	.. II
2	Ruhul Amin (E)	.. II
	Rajapur Primary School.	
1	Abdur Rashid (E)	.. II
2	Syed Abdul Haq (E)	.. II
3	Tofail Ahmad	.. II
4	Ali Ahmad (E)	.. II
	Charhazari Jagannath Primary School.	
1	Hemalata Majumdar (E)	.. I
	Chatarpaiya Board School.	
1	Chand Mian (E)	.. I
2	Md. Karimul Haq (E)	.. II
3	Priyalal Saha (E)	.. II
	Sahapur Primary School.	
1	Digendra Narayan Chakravarti (E)	.. I
2	Ali Azam (E)	.. I
3	Jitendra Kumar Nath (E)	.. I
4	Prafulla Kumar Guha (E)	.. I
5	Md. Fazel (E)	.. II
	Azizpur Primary School.	
1	Abdul Qader (E)	.. II
	Muhammadpur Primary School.	
1	Harinarayan Nath (E)	.. II
2	Habibullah (E)	.. II
3	Ruhini Kumar Das (E)	.. II
4	Bhuban Chandra Das (E)	.. II
5	Harihar Sarma (E)	.. II
	Kazirbag Board School.	
1	Narendra Kumar Acharjee (E)	.. II
2	Shaukatali Khan (E)	.. II
3	Shamsuddin Ahmad (E)	.. II
	Kalidaha U. P. School.	
1	Jnananda Sarma (E)	.. II
2	Priyanath Chakravarti	.. II
3	Sudhir Chandra Sarma	.. II
4	Labanya Latika Das (E)	.. I
	Dhalia Board School.	
1	Haripada Lodh (E)	.. II
2	Benode Behari Lodh	.. II
3	Sudhansu Bimal Datta (E)	.. II
4	Atul Chandra Datta (E)	.. II
5	Nirmal Chandra Majumdar (E)	.. II
	Dadpur Maktab.	
1	Forkanda Akhtar Khatoon (E)	.. II

	Name of candidate.	Division.
	Krishnarampur School.	
1	Abul Hashem (E)	I
2	Ali Azam	II
3	Rama Prasanna Dasgupta (E)	I
4	Abdur Rab	II
5	Abdul Mannan (E)	II
6	Abdul Haq	II
7	Ali Neaz (E)	II
	Govindapur U. P. School.	
1	Farid Ahmad (E)	I
2	Kazi A. M. Nurul Huda (E)	II
3	Nurul Islam (E)	II
4	Bazlur Rahman (E)	II
5	Raushonara Begam (E)	I
	Sultanpur U. P. School.	
1	Serajul Haq	I
2	Nuruzzaman (E)	II
3	Matiur Rahman	II
4	Habibullah	II
5	Mujibal Haq	II
	Bairagir Bazar U. P. School.	
1	Lalit Mohan Rudra Pal	II
2	Mafazzul Mian	II
3	Bhuban Chandra Nama (E)	II
	Ramnagar U. P. School.	
1	Lalit Mohan Pal	II
2	Bhabaranjan Shom	II
	Maheshdia Board School.	
1	Monoranjan Chakravarti (E)	II
2	Serajul Haq	II
3	Adhu Mian	II
	Karamullahpur U. P. School.	
1	Mujibur Rahman Chaudhury (E)	II
2	Haripada Nath (E)	I
	Bishnupur U. P. School.	
1	Haralal Sen	II
	North Char Sadhikari U. P. School.	
1	Jogendra Kumar Das (E)	II
2	Girindra Kumar Bhupal	II
3	Jatindra Kumar Das	II
	Kalimuddin Bhuiyanar Hat Maktab.	
1	Abdur Rab	II
2	Abdul Jabbar (E)	II
3	Abdur Rashid (E)	II
4	Azizul Haq Chaudhury (E)	I
5	Nur Muhammad (E)	II
6	Sheikh Ahmad	II
	Udrajpur Maktab.	
1	Md. Sekandarali	II
2	Sreehari Saha	II
	Dewanganj Maktab.	
1	Jatindra Kumar Majumdar	II
2	Sekandar Mian	II
	Chandpur Maktab.	
1	Abdul Aziz	II
2	Nur Muhammad	II
	Jagatpur U. P. School.	
1	Altafali, I (E)	II
2	Altafali, II	II
3	Jadu Gopal Nath	II
4	Gauranga Chandra Pal	II
5	Shamsuddin Ahmad	II
6	Anath Bandhu De	II

	Name of candidate.	Division.
	Purba Ramnagar Maktab.	
1	Bidhubhusan Majumdar	II
2	Devendra Kumar Sil	II
	Ghopal Maktab.	
1	Karimul Haq (E)	I
2	Mahmudul Haq (E)	II
3	Delwar Husain (E)	II
	Nijkuzra Maktab.	
1	Md. Nurul Islam	II
2	Khaje Ahmad	II
3	Muhammad Husain	II
	Ballavpur Maktab.	
1	Amir Husain	II
2	Abdul Hamid	II
3	Khodakar Shafiuddin Ahmad	II
4	Sultan Ahmad	II
	South Barua Primary School.	
1	Rabindra Kumar Sen	II
2	Pranata Chandra Chakravarti (E)	II
3	Samarendra Majumdar (E)	II
4	Nirmal Chandra Ray (E)	II
5	Amulya Kumar Baidya (E)	II
	Hichachhara Board School.	
1	Altafali (E)	I
2	Halimullah (E)	I
3	Sajul Ali	II
	Haripur Board School.	
1	Rafiq Ahmad (E)	II
2	Abul Faiz (E)	II
	Charbadu Board School.	
1	Bhuban Mohan Das	II
2	Rajani Kanta Das	II
3	Rajendralal Chakravarti (E)	I
4	Brajalal Nama	II
5	Sachindra Kumar Nama	II
6	Dhirendra Kumar Das	II
7	Akshay Kumar Das	II
	Bawa Board School.	
1	Md. Abdul Hai (E)	II
2	Jnanendra Kumar Shom (E)	II
3	Manalata Shom	I
4	Md. Muzammel Husain	II
5	Md. Nurul Haq	II
6	Md. Ansarul Haq (E)	II
7	Md. Shafiullah (E)	I
8	Md. Sufian (E)	II
	Rahmatpur Board School.	
1	Md. Abdullah (E)	I
2	Md. Reazuddin (E)	I
3	Md. Safiullah	II
4	Chitta Ranjan Banik (E)	II
5	Anwarul Haq (E)	II
	Bauria Board School.	
1	Serajul Mawla (E)	II
2	Muzammel Husain (E)	II
	Satgharia Board School.	
1	A. B. M. Mafazzul Husain (E)	I
2	Forrokh Ahmad (E)	II
3	Karunamay Karmakar	II
	Char Rahim Primary School.	
1	Manindra Kumar Nath	II
2	Banshi Badan Sutradhar	II

	Name of candidate.	Division.
	Noapara Primary School.	
1	Md. Ismail (E)	I
2	Ruhul Amin (E)	II
	Dighapar Primary School.	
1	Md. Serajul Mawla (E)	I
2	Md. Salamat Islam	II
	Musapur No. I Maktab.	
1	Md. Omar Mian (E)	I
2	Mobasshar Ahmad (E)	II
3	Md. Nakibullah	II
4	Azizul Islam	II
	Musapur Kamalin Maktab.	
1	Sultan Mahmood (E)	I
2	Muhammad Husain (E)	I
3	Abdul Mannan (E)	II
	Charlakshmi C. T. Maktab.	
1	Abdur Rahim (E)	I
2	Abdul Matin	II
3	Aminul Haq	II
4	Mafizullah	II
5	Ali Ahmad (E)	II
	Katghar No. I Maktab.	
1	Sultan Ahmad (E)	II
	Hatiya Town Primary School.	
1	Abdul Wahed (E)	II
2	Abdur Rashid	II
	Mir Muhammadali Board School.	
1	Abdul Alim (E)	II
2	Osmanali (E)	II
	Mir Muhammadali Maktab.	
1	Abdur Rashid	II
	Sukchar Board School.	
1	Sayakanta Banik	II
2	Wahidur Rahman	II
	Char Iswar Board School.	
1	Rajendra Kumar Das (E)	II
	Raghunathpur Board School.	
1	Mobasshar Ahmad (E)	I
2	Faiz Ahmad (E)	II
	Char Lathia Primary School.	
1	Bhabranjan Das (E)	II
2	Kumud Bandhu Das (E)	I
	Char Mehar Board School.	
1	Rafiqul Haq (E)	I
2	Habibur Rahman (E)	I
3	Jalal Ahmad (E)	I
4	Badsha Alam (E)	I
5	Maqbul Ahmad	II
6	Lutfur Rahman (E)	I
7	Asadul Haq	II
	Nalchira Board School.	
1	Lutfur Rahman	II
	Char Ghazi Board School.	
1	Ajit Lal Das (E)	II
	Afazerhat Maktab.	
1	Tafazzul Husain	II
2	Mujibur Rahman	II

	Name of candidate.	Division.
	Char Mehar Maktab.	
1	Md. Siddiqullah	II
2	Tafsir Ahmad	II
	Char Ramiz Maktab.	
1	Mamtazul Karim	I
	Renu Mianar Hat Primary School.	
1	Biranga Kumar Das (E)	II
	Char Alexandar Maktab.	
1	Md. Solaiman (E)	I
2	Abdur Rashid	II
3	Muhammadullah	II
4	Shamsul Haq (E)	II
	Char Kalakopa Maktab.	
1	Lutfur Rahman	II
2	Muzaffar Ahmad	II
	Chittagong District.	
	South Halishahar II Maktab.	
1	Abdul Matleb (E)	I
2	Mafzul Ahmad (E)	II
	East Solashahar Maktab.	
1	Bazal Ahmad (E)	II
	Ha zarbag Maktab.	
1	Md. Amin Sharif	II
	Katakhali Board Maktab.	
1	Badiul Alam	II
	South Halishahar Maktab.	
1	Saha Jamal (E)	I
2	Abu Hanifa (E)	II
3	Siddiq Ahmad (E)	I
	Katalganj Free School.	
1	Nazir Ahmad (E)	I
2	Saber Ahmad Khan (E)	II
3	Abu Saleh Md. Shafiqur Rahman	II
4	Md. Shafi (E)	II
5	Eyar Muhammad (E)	I
6	A. T. M. Siddiq (E)	II
7	Jahir Ahmad	I
8	Rashid Ahmad	II
	Goshaildenga Free School.	
1	Md. Nasar (E)	I
2	Anu Mian (E)	I
3	Mafzul Ahmad (E)	II
4	Abul Qasem (E)	II
5	Abdul Matleb (E)	II
	Enayetbazar Free School.	
1	Md. Hafizullah (E)	II
2	Abdul Qader (E)	II
3	Md. Serajul Haq	II
4	Md. Yaqubali (E)	II
	Patharghat Free School.	
1	Abdul Hakim	I
2	Ghulam Kibria	II
	West Madarbari Maktab.	
1	Nur Ahmad	I
2	Muhammad Mian (E)	II
3	Muhammad Khairullah (E)	II

	Name of candidate.	Division.
	Alkaran Maktab.	
1	Abdul Mannan (E)	II
2	Syed Ahmad	II
3	Abdul Malek	II
	Pathantooly Khan Sahib Maktab.	
1	Md. Islam (E)	II
2	Shamsul Husain (E)	II
	Municipal Free Primary School.	
1	Upendra Chandra Datta (E)	I
2	Abani Kanta Chakravarti (E)	II
3	Amulya Charan Sukladas (E)	I
4	Dinesh Chandra Das (E)	II
5	Babul Haq (E)	II
6	Ghanashyam Jaladas	II
7	Raja Mian	II
8	Manindra Chandra Mahajan (E)	II
9	Jiban Krishna Jaladas	II
10	Manirul Huda (E)	II
	Patenga Board School.	
1	Chandra Bhusan Chaudhury (E)	II
2	Hirendralal De (E)	II
3	Gopendra Ratan Deb (E)	II
4	Gopal Krishna Deb	II
	Saraipara Primary School.	
1	Sonaram Sil (E)	II
	Idgaon Primary School.	
1	Ahmadullah (E)	I
2	Jalal Ahmad (E)	I
	Agrabad Primary School.	
1	Wali Ahmad (E)	I
2	Serajul Haq (E)	I
3	Abdul Majid Khan (E)	II
4	Md. Sulaiman (E)	II
5	Sumanta Kumar Sil (E)	II
6	Md. Ishaq (E)	II
7	Md. Sekandar Mian (E)	II
8	Nural Haq (E)	II
	Hawla Primary School.	
1	Brajendralal Dhar (E)	II
	Alha Jaikali Primary School.	
1	Nanigopal De (E)	II
2	Krishna Chandra De (E)	II
3	Bhupati Ranjan Kanango (E)	II
4	Devendralal De (E)	II
5	Santi Ranjan Debanandi (E)	II
	Gomdandi Primary School.	
1	Jyotsnabala De (E)	I
2	Sudhir Krishna Biswas (E)	II
3	Sukumar Chandra Chaudhury (E)	II
4	Tejendralal De (E)	II
5	Parashuram Guha (E)	II
6	Jajneswar Ghosh (E)	II
7	Manindralal De	II
	Betagi Maktab.	
1	Sunil Kanti Barua (E)	II
	Syedpur Primary School.	
1	Masudul Haq (E)	I
2	Abdus Subhan (E)	II
3	Nurul Islam	II
	Shilak Dawling Primary School.	
1	Rashid Ahmad (E)	II
2	Shaha Alam (E)	II
3	Hriday Ranjan Barua (E)	II

	Name of candidate.	Division.
	West Gomdandi Board Maktab.	
1	Abdul Khaleq (E)	II
2	Ahmad Safa (E)	II
3	Arjun Kumar Sil (E)	II
	Amauchia Primary School.	
1	Sukhamayee Datta (E)	I
2	Chinta Haran Chaudhury (E)	II
	Kanangopara Akhil Primary School.	
1	Gopal Krishna Chakravarti (E)	II
2	Bepin Behari Chakravarti (E)	II
3	Govindadas Kanango (E)	I
4	Satyendranath Datta (E)	II
5	Dwijendralal Datta (E)	II
	Kadhurkhil Primary School.	
1	Jalal Ahmad (E)	I
2	Prafulla Ranjan Chaudhury (E)	II
	Saroatali Primary School.	
1	Chandra Shekhar Sen (E)	II
	Jaisthapura Madhab Primary School.	
1	Mohini Mohan Barua	II
2	Bijay Krishna Chakravarti (E)	II
	Hajeekhan Khil Maktab.	
1	Wali Ahmad (E)	II
2	Nurul Islam	II
	Kadamtali Maktab.	
1	Himansu Bimal Bhatta (E)	II
	Alla Maktab.	
1	Tejendralal Das (E)	II
2	Manindralal Das (E)	II
3	Abdul Majid	II
4	Birendralal Das	II
	Shakpura Board School.	
1	Ramani Mohan Chaudhury	II
2	Ruhini Ranjan Chaudhury (E)	I
3	Birendralal Chaudhury (E)	I
4	Chittaranjan Chaudhury	II
	Hawla Primary School.	
1	Matilal Chaudhury (E)	II
	West Sarafbhata Maktab.	
1	Ali Ahmad (E)	II
2	Ghulam Ahmad (E)	II
3	Ezharul Haq (E)	II
	West Andhar Manik Primary School.	
1	Dhanamani Barua (E)	II
2	Boni Madhab Barua (E)	II
3	Bhupati Mohan Barua	II
4	Nikunja Behari Barua (E)	II
5	Panchan Barua (E)	II
	North Guzra Primary School.	
1	Mansab Mian (E)	II
2	Ananta Kumar Sil	II
3	Wali Ahmad	II
	West Noapara Primary School.	
1	Narayan Chandra Raha (E)	II
2	Sailendra Lal Sen (E)	II
	Abourkhil Primary School.	
1	Lalendra Lal Barua	II

	Name of candidate.	Division.
	Guzra Ramkrishna Primary School.	
1	Haripada Nandi ..	II
	West Lelangara Maktab.	
1	Danu Mian (E) ..	I
2	Abdus Salam (E) ..	II
3	Ahmad Mian (E) ..	II
4	Ali Miayan (E) ..	I
5	Nur Mian (E) ..	II
6	Sultan Ahmad (E) ..	II
7	Abdul Wahab (E) ..	II
	South Halishar Maktab.	
1	Abul Hashem (E) ..	II
	Kaliganj Primary School.	
1	Sukhendu Bikash Dasgupta (E) ..	II
2	Hariram Das (E) ..	II
3	Ganesh Chandra Chaudhury (E) ..	II
4	Nanigopal Datta (E) ..	I
5	Nalini Ranjan Bardhan (E) ..	II
6	Suresh Chandra Kharanja (E) ..	II
7	Sudhansu Bimal De (E) ..	I
8	Bibhuti Bhusan Mitra (E) ..	II
9	Prafulla Ranjan Kharanja (E) ..	II
	Bandar Board School.	
1	Ahmad Kasem Chaudhury (E) ..	II
	Kokdandi No. II Primary School.	
1	Sudarshan Dobadas (E) ..	I
2	Subimal Datta ..	II
	South Burumchara Primary School.	
1	Md. Nasiruddin Ahmad (E) ..	II
2	Md. Fariduddin Ahmad (E) ..	II
3	Siddiq Ahmad (E) ..	I
4	Premhari De ..	II
	Jaldi Darogabari Primary School.	
1	Bimal Krishna Chatterjee (E) ..	I
2	Rabindranath Chakravarti (E) ..	II
3	Jogamaya Karan ..	I
4	Brajendralal De ..	II
	Kokdandi No. I Primary School.	
1	Jatindralal De (E) ..	I
2	Narayan Chandra Guha (E) ..	I
	North Premashia Maktab.	
1	Muhammadali (E) ..	I
2	Muhammad Yusuf ..	II
	Kadamrasul Maktab.	
1	Forrokh Ahmad (E) ..	I
2	Yaqubali ..	II
	Dantmara Board School.	
1	Bakshu Mian (E) ..	II
2	Munshi Mian (E) ..	II
	South Daulatpur Maktab.	
1	Abdul Bari ..	II
2	Raimohan Sukladas (E) ..	II
3	Fakir Ahmad (E) ..	II
4	Shamsul Huda Chaudhury (E) ..	II
	Charamba Primary School.	
1	Apurbalal Barua (E) ..	II
2	Basanta Kumar Chaudhury (E) ..	II
	Amilaish Primary School.	
1	Ajodhyabashi Kaibartadas (E) ..	I
2	Birangamohan Kaibartadas (E) ..	II

	Name of candidate.	Division.
	Amirabad Primary School.	
1	Sasanka Shekhar Banik (E) ..	II
2	Sudhir Chandra Chakravarti (E) ..	II
3	Harikrishna Bhattacharjee (E) ..	II
4	Niradbandhu Pal ..	I
5	Chittaranjan Das (E) ..	II
	Dhemsha Maktab.	
1	Md. Ibrahim ..	II
2	Abul Husain ..	II
	Ambaria Maktab.	
1	Md. Noor Subhan ..	I
2	Shamsul Haq (E) ..	II
	Fauzdarhat Maktab.	
1	Nurul Alam ..	I
	Mirzabazar Maktab.	
1	Nurul Islam ..	I
	Raghabpur Maktab.	
1	Md. Ishaq (E) ..	I
	Bamansundar Maktab.	
1	Kobbad Ahmad (E) ..	I
2	Abul Kasem (E) ..	I
	Abutorab Maktab.	
1	Maqsud Ahmad (E) ..	I
2	Md. Yaqubali (E) ..	I
	Madanhat Primary School.	
1	Amarchand Chaudhury (E) ..	I
	Wahedpur Primary School.	
1	Satish Chandra Sil (E) ..	I
2	Md. Obaidul Haq ..	II
3	Harimohan Sil (E) ..	II
4	Atindra Kumar De (E) ..	II
	Rajapur Primary School.	
1	Faiz Ahmad ..	II
	West Joar Primary School.	
1	Baradkumar Nath ..	II
2	Lalmohan Nath ..	II
	Masajidha Primary School.	
1	Suryyakanta Sengupta ..	II
	Maghadia Board School.	
1	Nagendra Kumar Nath ..	I
2	Abdul Latif ..	II
3	Din Muhammad ..	I
	Mahadevpur Primary School.	
1	Kshitish Chandra Sil (E) ..	II
2	Subal Chandra Sil (E) ..	II
3	Monoranjan Chakravarti (E) ..	II
4	Manindra Kumar Kulal (E) ..	II
5	Rabindra Kumar Sen (E) ..	II
6	Noor Islam (E) ..	II
	Chakrashala Primary School.	
1	Anil Baran Biswas (E) ..	I
2	Ashakiran Chaudhury (E) ..	I
	Bailtali Primary School.	
1	Alir Nabi ..	II
2	Ayubali (E) ..	I
3	Abdul Jabbar (E) ..	II
4	Mohanta Ram Nath (E) ..	II

	Name of candidate.	Division.
	Dengapara Primary School.	
1	Krishna Kumar Datta (E) ..	II
	Jiri Board School.	
1	Mir Jalaluddin Ahmad (E) ..	II
2	Kazi Sheikhul Islam (E) ..	II
	Pancharia Primary School.	
1	Mahima Ranjan Barua (E) ..	I
2	Premananda Nath (E) ..	II
	Uanainpura Primary School.	
1	Netra Ranjan Barua (E) ..	I
2	Sugata Sebak Barua (E) ..	II
3	Bhusan Barua (E) ..	II
4	Nirod Behari Barua (E) ..	II
5	Fazul Haq (E) ..	II
	Joara Bani Primary School.	
1	Santosh Kumar Chaudhury (E) ..	II
	Fatehnagar Primary School.	
1	Abdur Rashid (E) ..	II
2	Abdul Hashem (E) ..	I
3	Bandhudas Barua (E) ..	II
	South Azimpur Primary School.	
1	Manmohan Bhattacharjee (E) ..	I
2	Samarendralal Biswas (E) ..	II
3	Phanidhar Bhattacharjee (E) ..	II
4	Sitanath Chakravarti (E) ..	II
5	Jogesh Chandra Bhattacharjee (E) ..	II
6	Abdul Wadud (E) ..	II
	Habilasdvip Primary School.	
1	Rebarani Devi (E) ..	II
	Hulain Board School.	
1	Raimohan Nath (E) ..	I
2	Niranjan Prasad Chaudhury (E) ..	I
3	Manindralal Sukladas (E) ..	II
4	Ambikacharan Nath (E) ..	I
5	Shamsul Huda (E) ..	II
6	Md. Nurul Haq (E) ..	II
7	Abul Bashar (E) ..	I
	East Muzaffarabad Primary School.	
1	Ruhul Amin (E) ..	I
2	Badhsha Mian (E) ..	II
3	Kshetra Mohan Sen (E) ..	II
	North Deang Maktab.	
1	Yusuf Ahmad (E) ..	I
2	Sadaquatullah ..	II
	Uttar Deang Maktab.	
1	Muhammad Shafiqul Islam ..	II
2	Imdadali (E) ..	I
3	Md. Nurul Haq, I (E) ..	I
4	Amir Ahmad (E) ..	I
5	Abul Hashem (E) ..	II
	Paikpara Board Maktab.	
1	Abdul Hakim (E) ..	II
2	Fazlul Qader (E) ..	I
3	Abu Saiyad (E) ..	II
4	Abul Qasem (E) ..	I
5	Abdul Ghafur (E) ..	I
	East Pingala Maktab.	
1	Ahmad Mian ..	II
	Belmuri Maktab.	
1	Nurus-safa (E) ..	II

	Name of candidate.	Division.
	North Jiri Maktab.	
1	Khair Ahmad (E) ..	I
	East Jiri Maktab.	
1	Ahmad Safa (E) ..	I
2	Abdul Mataleb (E) ..	II
	Ramdasherhat Maktab.	
1	Ali Ahmad Mian (E) ..	I
	South Madarsha Akbaria Maktab.	
1	Bolal Ahmad (E) ..	I
	North Mekhal Maktab.	
1	M. Nurul Haq (E) ..	I
2	Md. Ghulam Subhan (E) ..	I
	Khandakia Samadia Maktab.	
1	Abdul Majid (E) ..	II
2	Kabir Ahmad (E) ..	II
	South Madarsha Abdun Nabi Maktab.	
1	Saheb Mian (E) ..	II
	Mandakini Maktab.	
1	Munshi Mian (E) ..	I
2	Muhammad Husain (E) ..	II
	Madarsha Primary School.	
1	Harendralal Nath ..	II
	Mekhal Primary School.	
1	Noor Mian (E) ..	II
	Rajarhat Board School.	
1	Md. Faiz Ahmad (E) ..	II
2	Razzaq Ali (E) ..	II
3	Abdur Rahman (E) ..	II
	South Fatehabad Primary School.	
1	Alimullah ..	I
	Nandirhat Primary School.	
1	Mahendralal Gupta (E) ..	II
2	Gopal Krishna Gupta (E) ..	II
	Fulchari Primary School.	
1	Islam Ahmad ..	II
2	Abdus Salam ..	II
3	Maniruzzaman ..	I
	Dolahazara Primary School.	
1	Ananta Kumar Acharjee ..	II
2	Manindralal De ..	II
	Chakmarkul Primary School.	
1	Abdul Hai (E) ..	II
2	Yusufali ..	II
	Fatehkhanrkul Board School.	
1	Muhammad Husain (E) ..	II
	Khuruskul School.	
1	Ratnasen De ..	II
	Lorarbag Maktab.	
1	Abdus Sukur (E) ..	I
2	Syed Ahmad (E) ..	II
	Bailtali U. P. School.	
1	Ambia Khatoon (E) ..	I

M. A. JAAFAR,
Inspector of Schools, Chittagong Division.

University of Dacca.

NOTIFICATION.

Ramna, Dacca, the 18th January 1935.

Orders by the Executive Council, dated the 18th January 1935.

The Degree of Doctor of Science has been conferred on Kamakhyaranjan Sen for a thesis entitled "Studies of Variation in the Physical Properties of Cotton."

N. AHMAD, *Registrar.*

University of Dacca.

NOTIFICATION No. 3152/Ex.

Ramna, Dacca, the 17th January 1935.

In partial modification of the dates for the (1) B.Sc. Honours Examination in Chemistry, (2) Examination of the Combined Honours in Mathematics and Physics and (3) B.Com. Examination, of March 1935, published in the Time-table for the Examinations on the 30th July 1934, it is hereby notified for the information of the candidates for these examinations that in view of the holidays on the 14th and 16th March 1935, on account of Id-uz-zuha, their examination in the following papers will be held on the dates and time as given below:—

B.Sc. Honours Examination in Chemistry, 1935.

Time—11 a.m. to 3 p.m.

1935.

Saturday, 23rd March	..	Chemistry Honours, Paper I.
Monday, 25th March	..	Chemistry Honours, Paper II.

Honours Examination of the Combined Course in Mathematics and Physics, 1935.

Time—11 a.m. to 3 p.m.

1935.

Saturday, 23rd March	..	Combined Honours in Mathematics and Physics, Paper VIII.
Monday, 25th March	..	Combined Honours in Mathematics and Physics, Paper IX.

B.Com. Examination, 1935.

Time—11 a.m. to 2 p.m.

1935.

Saturday, 23rd March	..	Economic Geography.
Monday, 25th March	..	Business Organisation (including Commercial Correspondence).

N. AHMAD, *Registrar.*

Orders by the Inspector of Schools, Chittagong Division.

Chittagong, the 24th January 1935.

The following candidates are declared to have passed the Guru and Muallim Training School Final Examinations for the year 1934 held in the Chittagong Division. Those marked with asterisks passed also in the optional subject of English :—

Comilla Guru Training School.

1 Haradhan Sarkar.
2 Fazlur Rahman*.
3 Md. Sanaul Haq.
4 Md. Altafali.
5 Sujatali.
6 Jatindra Mohan De.
7 Kazi Abdur Rahman.
8 Bidhubhusan Chakravarti*.
9 Kailash Chandra Nath Bhaumik.
10 Abdul Ghani Miyan.
11 Mokkarramali.
12 Jaychandra Debnath.
13 Probodh Chandra Datta*.
14 Mobarak Husain.
15 Md. Nawabali.
16 Md. Yunus Miyan.
17 Adhar Chandra Debnath.
18 Md. Ali Akbar.
19 Habibur Rahman*.
20 Rajani Kumar Gope*.
21 Abdur Rashid.
22 Mahbubali*.
23 Satish Chandra Barua.
24 Belayetali.
25 Keramatali.
26 Suresh Chandra Sarkar.
27 Sumanta Kumar Das.
28 Dalilur Rahman.
29 Abdul Jabbar.
30 Mir Abdul Ghani.
31 Kazi Abdul Monem*.
32 Md. Ibrahim Husain Chaudhury.
33 Jatindra Mohan Datta*.
34 Md. Aslam.
35 Dewanali.
36 Nagendra Chandra Sengupta.
37 Kazi Ramizuddin*.
38 Md. Yaqubali.
39 Barindra Kumar Bardhan*.
40 Md. Sandu Miyan*.
41 Md. Hafizullah.
42 Abdul Ali.
43 Annada Charan De.
44 Abdul Bari.
45 Abidali.
46 A. M. Sirajul Islam Chaudhury*.
47 Mahabbatali.
48 Siddiqullah.

Private.

1 Lal Miyan.

Aliganj Guru Training School.

1 Md. Habibullah*.
2 Abdur Rahman*.
3 Mafizur Rahman.
4 Belayet Husain Khan*.
5 Husain Ahmad.
6 Md. Waliullah.
7 Md. Rajjabali.
8 Abdul Halim.
9 Debendra Kumar De*.
10 Nur Ahmad.
11 Kamini Kumar Majumdar*.
12 Rohini Kumar Chanda*.
13 Aminuddin Ahmad.
14 Jajneswar Das*.
15 Radhika Ranjan Guha*.
16 Syed Syedali Patwari.
17 Birendra Chandra Ankur*.

18 Abani Mohan Das*.
19 Ramani Mohan Saha*.
20 Gopal Chandra Chakravarti*.
21 Abdul Jalil Khan.
22 Abdul Ghani Miyan*.
23 Md. Ismail Miyan*.
24 Md. Sanaullah*.
25 Sudhansu Bikash Bose*.
26 Mahendra Kumar Datta*.
27 Kudratali.
28 Md. Siddiqullah*.
29 Rafiquddin Ahmad*.
30 Md. Abdul Halim.
31 Md. Sekandarali*.
32 Mathura Mohan Nath*.
33 Md. Abdul Hamid*.
34 Mobarakali Patwari*.
35 Nurul Haq.
36 Abdur Rashid.
37 Md. Anwarullah*.
38 Jagadish Chandra Biswas*.
39 Abdul Majid Miyan*.
40 Md. Muslim*.

Noakhali Guru Training School.

1 Dwarakanath Ghose.
2 Nikunja Behari Pal*.
3 Satish Chandra Majumdar.
4 Rafiquddin Ahmad*.
5 Abdur Rashid*.
6 Praneswar De*.
7 Kamini Kumar Rakshit.
8 Habibur Rahman*.
9 Md. Idris.
10 Nuru Haq*.
11 Raisuddin Ahmad*.
12 Laqiutullah.
13 Azizullah Miyan*.
14 Jaychandra Nath*.
15 Abdur Rahman*.
16 Md. Mustafa*.
17 Gauranga Chandra Das*.
18 Maqbul Ahmad Chaudhury.
19 Syed Ahmad.
20 Md. Jamaluddin.

Non-stipendiary.

1 Harendra Kumar Das.
2 Nibaran Chandra Sil.
3 Krishna Bandhu Nath.
4 Emdadullah Khan.
5 Md. Fariduddin.
6 Fazlur Rahman.
7 Manindra Kumar Datta.
8 Kshetranath Bhaumik*.
9 Syedullah Bhuiyan*.
10 Fazlul Haq*.
11 Md. Atawar Rahman Khan*.

Private.

1 Imam Hussain.
2 Jamini Kanta Barua.
3 Narendra Kumar Bhaumik.

Feni Muallim Training School.

1 Md. Khalilur Rahman*.
2 Abdul Ghani*.
3 Arifur Rahman.
4 Ali Azam.
5 Ali Nawab.
6 Nasiruddin*.
7 Md. Altafali Patwari*.
8 Abdul Hamid.
9 Abdur Rauf.
10 Abdur Rahman.
11 Md. Muniruzzaman Chaudhury.
12 Syed Mukhtar Ahmad.
13 Mumtazuddin*.
14 Abdul Bari.
15 Salamatullah*.
16 Mushtaq Ahmad*.
17 Abdur Rab.
18 Md. Abdur Rab.
19 Md. Abdur Rashid*.
20 Abdul Majid Chaudhury*.
21 Md. Mujibul Haq*.
22 A. K. M. Shamsuz-zuha.
23 Fazlul Haq.
24 Md. Muminul Haq.
25 Md. Hasanuzzaman*.
26 Gholam Rahman.
27 Md. Nurul Haq*.
28 Md. Shamsuddin*.
29 Md. Shafiqul Alam*.
30 Mukhlesur Rahman.
31 Kazi Md. Ali Akbar.
32 Sirajul Islam.
33 Ghulam Mawla.
34 Md. Haidarullah*.
35 Sirajul Haq.
36 Mujibul Haq*.
37 Saadat Husain*.
38 Abdur Razzaq*.

Private.

1 Darweshali *alias* Md. Mehdi.
2 Abdus Shukur.

Chittagong Guru Training School.

1 Nikunja Behari Biswas*.
2 Tejendralal Nath*.
3 Jogendralal Gupta*.
4 Jnanada Ranjan Datta*.
5 Md. Hashmatullah, I*.
6 Nalini Ranjan Datta*.
7 Manindra Chandra Majumdar*.
8 Abinash Chandra Biswas*.
9 Sirajul Haq*.
10 Birendra Krishna Deb Sarma*.
11 Delwar Husain*.
12 Md. Muharamali*.
13 Husanuzzaman.
14 Md. Mafzul*.
15 Kamini Mohan Taluqdar*.
16 Md. Hashmatullah, II*.
17 Nazir Ahmad Chaudhury*.
18 Rajani Ranjan Sikdar.
19 Siddiq Ahmad.
20 Nirendra Kumar Rakshit*.
21 Beharilal Barua*.
22 Mustafizur Rahman*.
23 Kabir Ahmad*.
24 Hafizur Rahman.
25 Shamsul Haq.
26 Jainul Abedin*.
27 Syedur Rahman Chaudhury*.
28 Mahbubullah.
29 Mafizur Rahman.
30 Aswini Kumar Pariyal.
31 Jatindra Bimal Mahajan*.
32 Md. Abdul Khaleq Bhuiyan.
33 Kazi Amin Sharif*.
34 Abdul Latif Patwari.
35 Kazi Abdul Hadi*.
36 Obaidur Rahman.
37 Elahi Baksh.
38 Md. Matiur Rahman.
39 Abdul Baset.
40 Rashid Ahmad.

Non-stipendiary.

1 Wali Ahmad*.
2 Jnanadalal De.
3 Kabir Ahmad*.
4 Mujibul Haq.

Rangamati Guru Training School.

1 Madan Mohan Chakma.
2 Chandranath Chakma.
3 Sarada Kumar Chakma.
4 Jayanta Mohan Chakma.
5 Birbahu Chakma.

M. A. JAAFAR, *Inspector of Schools.*

Orders by the Inspector of Schools, Dacca Division.

The 23rd January 1935.

ERRATUM.

In this office notification, dated the 2nd October 1934, published in pages 1353 and 1357 of the *Calcutta Gazette*, dated 18th October 1934 and 25th October 1934, respectively, *for* "Niloj Kumar Ghosh" please *read* "Niloj Kumar Ghosh Dastidar."

A. H. KHAN CHAUDHURY,
Inspector of Schools, Dacca Division.

Presidency Division.

40-1A, Free School Street, Calcutta, the 25th January 1935.

Results of the Final Examinations of the Guru Training and Muallim Training Schools held in December 1934 :—

24-Parganas.

Jadavpur Guru Training School.

1 Birendranath Banerjee.
2 Tulsicharan Mondal.
3 Ajitkumar Sardar.
4 Anath Nath Mookerjee.
5 Radhasyam Sadhukhan.
6 Taraknath Mukerjee.
7 Bibhuti Bhusan Das.
8 Md. Nurul Haque.
9 Md. Afzal Ali.
10 Kartikchandra Ghosal
11 Hrishikesh Pal.
12 Prahlad Ch. Bhandari.
13 Md. Furrokh Hussain.
14 Md. Basiruddin.

Diamond Harbour Guru Training School.

15 Amulya Charan Koyal.
16 Md. Mokarram Ali.
17 Munshi Daud Ali.
18 Radhanath Paik
19 Kshitish Ch. Purkait.
20 Md. Rowson Ali.
21 Sudhanwa Bhusan Das.
22 Harendranath Sardar.
23 Bharat Ch. Haldar.
24 Sushil Chandra Das.
25 Rodaneswar Pal.
26 Md. Abu Baker.
27 Bishnupada Middey.
28 Kaliprasad Saha.
29 Dhirendranath Dey.
30 Kanailal Samanta.

Baraset Guru Training School.

31 Sanyasi Mohan Das.
32 Manik Lal Das.
33 Ashutosh Biswas.
34 Amritalal Sardar.
35 Ashutosh Haldar.
36 Sudhir Kumar Nath.
37 Charu Chandra Biswas.
38 Azizar Rahman Mullick.
39 Md. Golam Rasul.
40 Md. Sekendar Ali Choudhury.
41 Md. Raihanuddin Sheik.
42 Md. Jaha Buksh.

Basirhat Guru Training School.

43 Iswar Chandra Mistri.
44 Md. Hamizuddin.
45 Mohan Lal Biswa.
46 Narendranath Mondal.
47 Sarat Chandra Mondal.
48 Md. Asubar Rahman.
49 Balai Krishna Haldar.
50 Jagannath Mondal.
51 Md. Abdul Khaleque.
52 Sheikh Yeakub Ali.
53 Kanai Lal Chakravarti.
54 Md. Belal Rahman.

Iswarigachha Guru Training School.

55 Gadadhar Kabashi.
56 Ashutosh Mondal.
57 Mrinalkanta Mondal.
58 Parbati Charan Sardar.
59 Md. Abdul Gani.
60 Krishnadas Mondal.
61 Nishiprovat Chakravarti.
62 Mahatabuddin Ahmed.
63 Girindranath Ghosh.
64 Srinibas Chandra De.
65 Subodh Krishna Biswas.
66 Surendranath Mondal.
67 Md. Rahamat Ali.
68 Shahar Ali Mondal.
69 Krishnakumar Maitra.

Kulpi Guru Training School.

70 Tarinipada Haldar.
71 Ramkrishna Kar.
72 Bhupendra Nath Moyra.
73 Bishnupada Nabhai.
74 Anukul Chandra Mondal.
75 Syed Golam Mohammad.
76 Chintamoni Haldar.
77 Babhrubahan Das.
78 Jhareswar Jana.
79 Nripendra Nath Baidya.
80 Srish Chandra Pramani.
81 Joykrishna Purkait.
82 Bhusan Chandra Mondal.
83 Radhagovinda Bhunia.

Jaynagar Guru Training School.

84 Chunilal Mondal.
85 Mahendranath Haldar.
86 Md. Habibulla Laskar.
87 Pulinbehari Purkait.
88 Srinibas Purkait.
89 Gour Chandra Sapui.
90 Khagendranath Koyal.
91 Amulya Charan Sardar.
92 Sarat Chandra Haldar.
93 Rajendra Lal Das.
94 Kalimuddin Ahmed.
95 Indubhusan Purkait.
96 Sanatan Mondal.
97 Hongeswar Naiya.
98 Dhirendra Nath Mondal.
99 Dhirendra Nath Gharami.

Private.

100 Rajendra Nath Mistri.
101 Mahim Chandra Haldar.
102 Kalipada Baidya.
103 Md. Yusuf Ali.
104 Taraknath Adhikari.
105 Sudhir Chandra Mondal.
106 Dad Ali Haldar.

Banspole Muallim Training School.

1 Md. Abdul Malek.
2 Md. Meher Ali.
3 Md. Reasatullah.
4 Kalimuddin Ahmed.
5 Md. Syed Ali.
6 Wajed Ali Molla.
7 Md. Abdul Wahhab Khan.

Private.

8 Abbas Ali Haldar.

J. M. SEN,
Inspector of Schools, Presidency Division.

Registered No. C207

The Calcutta Gazette

THURSDAY, JANUARY 31, 1935.

PART II

Advertisements.

Notices.

Advertisements, Notices, etc., intended for insertion in this part of the Gazette cannot be received after noon on Saturday. All manuscripts and postal remittances must be addressed to Superintendent, Government Printing, Bengal Government Press, Alipore. For the convenience, however, of parties or firms located in Calcutta cash payments of Advertisement charges may be made at Publication Sales Office, Room No. 2, Ground Floor, Writers' Buildings, Calcutta.

Land Sale Notices.

Certificate Department, Jessore Collectorate, Jessore District.

Place of sale—In the Court of the Certificate Officer, Jessore.

Date and hour of sale—20th February 1935, at 12 noon.

Statement of Certificate Sales.

No. and year of certificate.	Name of the certificate-holder.	Name of certificate-debtors.	Demand.	Particulars of property to be sold.
			Rs. a. p.	
628(x) of 31-32	Secretary of State for India in Council.	(1) Giribala Debi, wife of Hara Chandra Mazoomdar, of Pangsa, police-station Pangsa, district Faridpur, c-o Babu Aswini K. Mitra, Deputy Magistrate, Midnapore. (2) Hemanta Bala Debi, wife of Abhoy Charan Mazoomdar, of Pangsa, police-station Pangsa, district Faridpur. (3) Pramila Bala Debi, wife of Satish Chandra Das, of Bishoi Showrail, police-station Pangsa, district Faridpur. (4) Rai Purna Chandra Lahiri Bahadur and Hem Chandra Lahiri of Narail, police-station Narail, at present, 52, Police Hospital Road, Calcutta. (5) Secretary, Faridpur Loan Office, Limited, Faridpur town.	6,192 4 9	T. No. 5578/0, Zamindari Bhar-Fatejangpur, pargana Bhar-Fatejangpur, police-station Sailkupa, land revenue Rs. 3,294-11-8.

Jessore, the 9th January 1935. [ILLEGIBLE], Certificate-Officer.

Advertisement of Sale.

NOTICE is hereby given that the under-mentioned plots of land, no longer required by Government, situated along the Minto Coal Co.'s Sheikpur Siding of the Baraboni Loop of the East Indian Railway, in the district of Burdwan, will be put up to sale at 12 noon on the 30th day of March 1935, Saturday, corresponding to the 16th Chaitra, 1341 B.S. Fusli, at the Asansol Subdivisional Office.

The purchasers of the several plots of land will be subject to the following conditions :—

1st.—The purchasers will have no power to make any excavations on the land nearer than fifteen feet from the railway boundary or to plough the land nearer than three feet from the same.

2nd.—If the amount of purchase-money does not exceed Rs. 100, the whole amount must be paid at once.

3rd.—If the amount of purchase-money exceeds Rs. 100, one-fourth of the amount must be immediately deposited. If the balance be not paid by noon of the fifteenth day after the sale, reckoning the day of sale as one, or if that day be a close holiday, then by noon of the first succeeding office day, the sale shall be cancelled, the sum deposited being forfeited to Government and the lot again put up for sale at the risk of the defaulting purchaser, after issue of advertisement, as in the case of original sale.

4th.—The plots of land will be sold subject to an annual assessment of Rs. 7-8 (which will be subject to revision at the next general settlement of the temporarily-settled estates of the district) to the highest bidders.

5th.—The sale will become final on receipt by the Collector of the orders of the Commissioner confirming it, and a regular conveyance will then be granted to the purchaser.

Consecutive lot No.	Name of district.	Pargana and mauza.	Number of miles in which lands are situated.	Situated on which side of the railway.	Approximate area of lot in acres and decimals.	Land excluded from sale from each lot—		Commencement and termination of lot.	Boundary.
						Reasons for exclusion.	Acres and decimals.		
1	2	3	4	5	6	7	8	9	10—13.
1	Burdwan	Pargana Shergarh, mauzas Nandee and Damudarpur.	2 and 3 of the Baraboni Loop of the East Indian Railway. (125 7/8 from Howrah.)	Both sides (North and South).	2·98 acres .. Revenue Rs. 7-8.	Nil ..	Nil ..	The plans may be inspected at the Subdivisional Office at Asansol.	(10) North by cadastral survey plot Nos. 3522, 3394, 3393, 3392, 3391, 3385 and 3384 of mauza Nandee, and 537, 536, 544 and 543 of mauza Damudarpur. (11) East by cadastral survey plot No. 3524 (part). (Railway line.) (12) South by cadastral survey plot Nos. 470, 545, 476, 472, 473 and 489 of mauza Damudarpur and 3525 of mauza Nandee. (13) West by cadastral survey plot No. 453 of mauza Damudarpur.

Asansol, the 14th January 1935.

J. L. LLEWELLYN, Subdivisional Officer.

NOTICE OF SALE.

In the Court of the Sub-Judge of Nadia.

T. EX. CASE No. 116 OF 1933.

Sibendranath Singha Ray, decree-holder,

versus

Kanailal Singha Ray and others, judgment-debtors.

THAT the tauzi No. 470 of the Nadia Collectorate comprising the mauzas Dhubi Nagadi, Senpur, Dhobadanga and Belpukuria, under the Nakashipara thana, is advertised for sale for the decretal amount of Rs. 51,564-7. The revenue payable for the said tauzi is Rs. 1,262-10-4 per year. The judgment-debtors have sixteen annas zamindary interest in the said tauzi mahals.

Proclamation has been issued fixing 9th February 1935 for sale but that date having subsequently been declared a holiday the sale is to be held on 11th February 1935 at noon.

K. N. MITRA, Sub-Judge.

Krishnagar, the 12th January 1935. (124 - 1)

In the 3rd Court of the Sub-Judge, 24-Parganas, at Alipore.

RENT EXECUTION CASE No. 228 OF 1934.

Rai Satindra Nath Chowdhury, decree-holder,

versus

Gouri Sanker Biswas and others, judgment-debtors.

IT is hereby notified that on the 4th December 1934 it was ordered that the properties mentioned in the accompanying schedule will be sold in auction on the 13th day of February 1935 at 12 noon by the Nazir of the Court :—

Schedule.

Immovable properties to be sold at auction for arrears of rent mentioned below :—

Mauzas Kanaikati and Kantalberia, Lot No. 163 (1st portion), J. L. Nos. 112 and 113 in pargana Sunderbans lying within the police-station of Hasnabad in the district of 24-Parganas and bearing tauzi No. 1392 of the said Collectorate and being Ganti tenures as comprised in khatian No. 3 with lands in khas possession and other lands and tenures enclosed in khatians of tenants and cutchery houses, tanks, etc.

Mauza Kanaikati—800 acres. 01 decimal.
Mauza Kantalberia—434 acres. 78 decimal.

Total 1,234 acres. 79 decimal.

Of which annual rent of Rs. 5,862 and cesses payable to the landlord, decree-holder. Decretal dues Rs. 32,456-5-6 p. Value Rs. 20,000.

B. P. BASU, Sub-Judge.

Alipore, the 11th January 1935. (195—2)

In the 2nd Court of the Munsif, Nilphamari.

RENT EXN. No. 1902 OF 1934.

Claim—Rs. 82-7-6 p.

Date of sale—5th February 1935.

Satyendra Mohon Ray Choudhury and others, decree-holders,

versus

Tofail Hossein Mea and others, judgment-debtors.

THE following property to be sold in public auction on 5th February 1935 at 12 noon :—

Schedule No. 1.

2 as. 8 pies share of judgment-debtors 3, 4, 5 and 6 in the zemindary interest in mahal Chengmari, tauzi No. 146, Rangpur Collectorate, pargana Tepa, station Jaldhaka, district Rangpur. Annual 16 annas revenue Rs. 402-2-10 gandas in said judgment-debtors' share Rs. 67-0-1-2-2 krantis. Value Rs. 200.

Schedule No. 2.

2 as. 8 pies Patni interest in the above mahal owned by said judgment-debtors. Annual rent Rs. 166 or Rs. 176-5 as. including cess. Value Rs. 100.

K. DAS GUPTA, Munsif.

Nilphamari, the 23rd January 1935. (292—1)

In the 2nd Court of the Munsif, Nilphamari.

RENT EXN. No. 1899 OF 1934.

Claim—Rs. 82-7-6 p.

Date of sale—5th February 1935.

Satyendra Mohon Ray Choudhury and others, decree-holders,

versus

Tofail Hossein Mea and others, judgment-debtors.

THE following property to be sold in public auction on 5th February 1935 at 12 noon :—

Schedule No. 1.

2 as. 8 pies share of judgment-debtors 3, 4, 5 and 6 in the zemindary interest in mahal Chengmari, tauzi No. 146, Rangpur Collectorate, pargana Tepa, station Jaldhaka, district Rangpur. Annual 16 annas revenue Rs. 402-2-10 gandas in said judgment-debtors' share Rs. 67-0-1-2-2 krantis. Value Rs. 200.

Schedule No. 2.

2 as. 8 pies Patni interest in the above mahal owned by said judgment-debtors. Annual rent Rs. 166 or Rs. 176-5 as. including cess. Value Rs. 100.

K. DAS GUPTA, Munsif.

Nilphamari, the 23rd January 1935. (293—1)

In the High Court of Judicature at Fort William in Bengal, in insolvency.

NOTICE OF ADJUDICATION ORDER.

No. 3 of 1935.

Re Mordecai Samuel Toster, residing at No. 25, Marquis Street, in the town of Calcutta, formerly working as an assistant of F. Engster of No. 5, South Tangra Road, at present of no occupation, *ex parte* the debtor.

T. C. Dutt, debtor's solicitor.

ON the 21st day of January 1935 an order was made by the High Court of Judicature at Fort William in Bengal in its insolvency jurisdiction adjudging the above named as an insolvent.

Note.—All debts due to the estate should be paid to me.

Dated this 24th day of January 1935.

G. M. FALKNER, Official Assignee.

In the High Court of Judicature at Fort William in Bengal, in insolvency.

NOTICE OF ADJUDICATION ORDER.

No. 4 of 1935.

Re Jacob Benjamin Jacobs, an assistant in the office of Messrs. B. N. Elias & Co., Ltd., of No. 19/D, Bow Bazar Street, in the town of Calcutta, residing at No. 40, Metcalfe Street, in Calcutta aforesaid, *ex parte* the debtor.

Victor E. Moses, debtor's solicitor.

ON the 23rd day of January 1935 an order was made by the High Court of Judicature at Fort William in Bengal in its insolvency jurisdiction adjudging the above-named as an insolvent.

Note—All debts due to the estate should be paid to me.

Dated this 26th day of January 1935.

G. M. FALKNER, Official Assignee.

In the High Court of Judicature at Fort William in Bengal, In Insolvency.

NOTICE OF ADJUDICATION ORDER.

No. 5 of 1935.

Re Alfred Bryan, residing at No. 25, Ripon Lane, in the town of Calcutta, employed as a Marine Engineer, Bengal Nagpur Railway, Garden Reach, Calcutta, *ex parte* the debtor in person.

ON the 23rd day of January 1935 an order was made by the High Court of Judicature at Fort William in Bengal in its insolvency jurisdiction adjudging the abovenamed as an insolvent.

Note.—All debts due to the estate should be paid to me.

Dated this 26th day of January 1935.

G. M. FALKNER, Official Assignee.

In the High Court of Judicature at Fort William in Bengal, In Insolvency.

No. 38 of 1933.

Re Estate Jnanendra Nath Pramanick.

NOTICE is hereby given that a dividend is intended to be declared in the above estate.

Persons claiming to be creditors of the above estate are hereby required to lodge their claims with the undersigned by the 15th proximo, supported by affidavit and necessary vouchers, no claims received by the undersigned after the 15th proximo will be considered.

Persons who have already filed their claims need not file any fresh claim.

A form of proof of debt may be had on application to the undersigned.

G. M. FALKNER, Official Assignee.

10, Old Post Office Street, Calcutta, 25th January 1935.

(314—1)

In the Court of the District Judge of Dacca.

INSOLVENCY CASE No. 32 OF 1934.

Firm Jagannath Revati Mohan Saha, petitioning creditor,

versus

Bhuban Mohan Saha, debtor, opposite party.

WHEREAS Pushparaj Saha, son of late Jagannath Saha, having place of business at Chowk Barakatra police-station Lalbagh, district Dacca, a partner on behalf of the firm Jagannath Revati Mohan Saha, has applied to this Court to adjudge Bhuban Mohan Saha, son of late Biswambar Saha, resident of Rup Chand Das Lane, police-station Sutrapur, district Dacca, an insolvent, the 11th February 1935 next has been fixed for the hearing of the application, examination of the debtor and the creditors.

E. B. H. BAKER, District Judge.

Dacca, the 5th January 1935. (111—1)

NOTICE TO CREDITORS OF APPLICATION FOR DISCHARGE.

Section 41(*f*) of the Provincial Insolvency Act, V of 1920.

In the Court of the District Judge of Dacca.

INSOLVENCY CASE No. 19 OF 1933.

Manuraddin Bepari, son of late Sheik Meher Bepari, resident of Depasai, police-station Dhamrai, district Dacca, insolvent.

TAKE notice that the abovenamed insolvent has applied at the Court for his discharge, and that the Court has fixed the 12th day of February 1935, at 10 o'clock, or hearing the application.

Dated this 12th day of January 1935.

E. B. H. BAKER, District Judge.

(178—1)

In the Court of the District Judge of Dacca.

INSOLVENCY CASES Nos. 1, 2 AND 3 OF 1935.

Ganesh Narayan Todi, petitioning creditor in all the three cases,

versus,

Firm in the name of Dinabandhu Rajendra Chandra Shaha, debtor in insolvency Case No. 1 of 1935,

Rajendra Chandra Shaha, debtor in insolvency Case No. 2 of 1935, and

Benode Behari Shaha, debtor in insolvency Case No. 3 of 1935.

WHEREAS Ganesh Narayan Todi, son of late Hardeo Todi, residing at present and carrying on business at Bhagabanganj, police-station Narayanganj, district Dacca, creditor, has filed three separate applications to adjudge (1) the firm in the name of Dinabandhu Rajendra Chandra Shaha having its place of business at Katakhali (Munshirhat), (2) Rajendra Chandra Shaha and (3) Benode Behari Shaha, sons of late Gurucharan Shaha, residing at Katakhali (Munshirhat), police-station Munshiganj, district Dacca, debtors, insolvents, the Court has fixed the 13th February 1935 next for the hearing of the aforesaid applications, examination of the debtors and the creditor.

Dated Dacca, the 23rd January 1935.

E. B. H. BAKER, District Judge.

(288—1)

In the Court of the District Judge of Faridpur.

INSOLVENCY CASE No. 176 OF 1934.

Abbas Molla, son of late Nazem Molla, of Dadpur, police-station Bhusna, district Faridpur, debtor-petitioner.

NOTICE is hereby given that the abovenamed debtor has applied to this Court to be adjudged insolvent and the 7th February 1935 has been fixed for the hearing of the application.

K. C. BASAK, District Judge.

Faridpur, the 18th January 1935. (221—1)

In the Court of the District Judge of Faridpur.

INSOLVENCY CASE No. 185 OF 1934.

Gopi Nath Chakravarty, son of late Rajendra Chandra Chakravarty, of Gayghar Nayakandi, police-station Palong, district Faridpur, creditor, petitioner,

versus

(1) Jogendra Chandra Saha, (2) Mahendra Chandra Saha *alias* Mahindra Chandra Saha, (3) Devendra Chandra Saha *alias* Debindra Chandra Saha, sons of late Girish Chandra Saha, of Gayghar Nayakandi, police-station Palong, district Faridpur, debtors, opposite party.

NOTICE is hereby given that the abovenamed creditor has applied to this Court to have the debtors, opposite party adjudged insolvents and the 11th February 1935 has been fixed for the hearing of the application.

K. C. BASAK, District Judge.

Faridpur, the 21st January 1935. (246—1)

In the Court of the District Judge of Faridpur.

INSOLVENCY CASE No. 178 OF 1934.

Taju Fakir, son of late Nabu Fakir, of Char Tepakhola, police-station Kotwali, district Faridpur, debtor, petitioner.

NOTICE is hereby given that the abovenamed petitioner has applied to this Court to be adjudged insolvent, and the 13th February 1935 has been fixed for the hearing of the application.

K. C. BASAK, District Judge.

Faridpur, the 22nd January 1935. (247—1)

In the Court of the District Judge of Hooghly.

NOTICE is hereby given under clause (2) of section 12 of the Provincial Insolvency Act, V of 1920, to his creditors that the insolvency petition of Hari Sadhan Hazra, son of Lal Chand Hazra, of Husainpore, thana Jangipara, district Hooghly, has been admitted by this Court as No. 98 of 1934 and that the 6th February 1935 has been fixed for the hearing thereof.

S. SEN, District Judge.

Chinsura, the 9th January 1935. (187—1)

In the Court of the District Judge of Hooghly.

INSOLVENCY PETITION No. 20 OF 1934.

NOTICE is hereby given that Siva Kristo Ghosh and Gopi Krishto Ghosh, sons of late Rash Behari Ghosh, of Goghat, thana Goghat, district Hooghly, was on the 14th July 1934, adjudged an insolvent. The 7th February 1935 has been fixed for framing a schedule and creditors are required to prove their claims on that day.

S. SEN, District Judge.

Chinsura, the 15th January 1935. (205—1)

In the Court of the District Judge of Hooghly.

NOTICE is hereby given under clause (2) of section 12 of the Provincial Insolvency Act, V of 1920, to his creditors that the insolvency petition of Nandalal Paramanik, son of late Hatu Paramanik, of Peyarapur, thana Serampore, district Hooghly, has been admitted by this Court as No. 1 of 1935 and that the 14th February 1935 has been fixed for the hearing thereof.

S. SEN, District Judge.

Chinsura, the 15th January 1935. (206—1)

In the Court of the District Judge of Pabna and Bogra.

INSOLVENCY CASE No. 31 OF 1934.

NOTICE is hereby given that insolvent Nasiruddin Sheikh, son of late Nisu Sheikh, of Mahendrapur, police-station and district Pabna, has applied for his final discharge and the 18th February 1935 has been set down for hearing of the application.

B. K BASU, District Judge.

Pabna, the 17th January 1935. (219—1)

In the Court of the District Judge of Pabna and Bogra.

INSOLVENCY CASE No. 2 OF 1935.

WHEREAS Bejoy Govinda Saha, son of late Krishna Lal Saha, of Nischintapur, police-station Sujanagar and district Pabna, has applied to this Court, by a petition, dated 10th January 1935, to be declared an insolvent, this is to give notice to all his creditors that the Court has fixed the 12th February 1935 for hearing of the aforesaid application and for examination of the debtor.

B. K. BASU, District Judge.

Pabna, the 17th January 1935. (220—1)

In the Court of the District Judge of 24-Parganas.

INSOLVENCY CASE No. 1 OF 1935.

Chaitanaya Chandra Saha of 119, New Circular Road, Karaya, 24-Parganas, applicant.

To Raja Bala Saha and Purna Soshi Saha, of 42, Dhurumtolla Street, Calcutta, and others, creditors.

ON the 15th day of January 1935 it was ordered that the matter of the petition of the applicant be heard on the 11th day of February 1935, and that the said applicant do attend to be examined by this Court on that date.

T. H. ELLIS, District Judge.

Alipore, the 16th January 1935. (203—1)

In the Court of the District Judge of 24-Parganas.

INSOLVENCY CASE No. 2 OF 1935.

Khundker Aminullah of Baduly, Noakhali, at present of Khiddirpur, 24-Parganas, applicant.

To Md. Afazuddin *alias* M. A. Din of Manara, police-station Laksam, Tippera, and others, creditors.

ON the 14th day of January 1935 it was ordered that the matter of the petition of the applicant be heard on the 11th day of February 1935, and that the said applicant do attend to be examined by this Court on that date.

T. H. ELLIS, District Judge.

Alipore, the 16th January 1935. (204—1)

In the 4th Court of the Sub-Judge of 24-Parganas.

INSOLVENCY CASE No. 440 OF 1934.

Jatindra Nath Sen of 18, Sultan Alam Road, police-station Tollygunge, applicant.

To Narshingdas Agarwalla of 23, Garanhata Street, Calcutta, and others, creditors.

ON the 11th day of December 1934 it was ordered that the matter of the petition of the applicant be heard on the 11th day of February 1935, and that the said applicant do attend to be examined by this Court on that date.

J. N. SEN, Sub-Judge.

Alipore, the 14th December 1934. (4—1)

In the 4th Court of the Sub-Judge of 24-Parganas.

INSOLVENCY CASE No. 468 OF 1934.

Kasem Ali Shaw of Titagarh, police-station Titagarh, applicant.

To Sabadar Shaw of Titagarh Kuli line, Titagarh, creditor.

ON the 14th day of December 1934 it was ordered that the matter of the petition of the applicant be heard on the 11th day of February 1935, and that the said applicant do attend to be examined by this Court on that date.

J. N. SEN, Sub-Judge.

Alipore, the 15th December 1934. (6—1)

In the 4th Court of the Sub-Judge of 24-Parganas.

INSOLVENCY CASE No. 477 OF 1934.

Shewbaran Goala of Company Bazar, Khidderpore, police-station Watgunge, applicant.

To Ali Mahammad Kabuli of 34, Diamond Harbour Road, police-station Watgunge, and others, creditors.

ON the 14th day of December 1934 it was ordered that the matter of the petition of the applicant be heard on the 11th day of February 1935, and that the said applicant do attend to be examined by this Court on that date.

J. N. SEN, Sub-Judge.

Alipore, the 15th December 1934. (7—1)

In the 4th Court of the Sub-Judge of 24-Parganas.

INSOLVENCY CASE No. 485 OF 1934.

Abdul Huq of 47, Nazir Lane, Kiddorpore police-station Watgunge, applicant.

To Ajiban Nessa Bibi of 88, Garden Reach Road, Janbazar, Khidderpore, and others, creditors.

ON the 12th day of December 1934 it was ordered that the matter of the petition of the applicant be heard on the 11th day of February 1935, and that the said applicant do attend to be examined by this Court on that date.

J. N. SEN, Sub-Judge.

Alipore, the 14th December 1934. (8—1)

In the 4th Court of the Sub-Judge of 24-Parganas.

INSOLVENCY CASE No. 493 OF 1934.

A Varahulu of P. 26, Circular Garden Reach Road, Khidderpore, police-station Watgunge, applicant.

To Shaeb Ram of 26P., Circular Garden Reach Road, Khidderpore, and others, creditors.

ON the 14th day of December 1934 it was ordered that the matter of the petition of the applicant be heard on the 11th day of February 1935, and that the said applicant do attend to be examined by this Court on that date.

J. N. SEN, Sub-Judge.

Alipore, the 18th December 1934. (9- 1)

In the 4th Court of the Sub-Judge of 24-Parganas.

INSOLVENCY CASE No. 506 OF 1934.

Kali Charan Bhattacharjee of Ujirpore, police-station Narial, district Jessore, applicant.

To Khulna Loan Company, Ltd., Khulna, and others, creditors.

ON the 11th day of December 1934 it was ordered that the matter of the petition of the applicant be heard on the 11th day of February 1935, and that the said applicant do attend to be examined by this Court on that date.

J. N. SEN, Sub-Judge

Alipore, the 14th December 1934. (12—1)

In the 4th Court of the Sub-Judge of 24-Parganas.

INSOLVENCY CASE No. 509 OF 1934.

Torap Mondal of Dampati, police-station Sarupnagar, applicant.

To Secretary, Taki Co-operative Bank and others, creditors.

ON the 12th day of December 1934 it was ordered that the matter of the petition of the applicant be heard on the 11th day of February 1935, and that the said applicant do attend to be examined by this Court on that date.

J. N. SEN, Sub-Judge.

Alipore, the 14th December 1934. (13—1)

In the 4th Court of the Sub-Judge of 24-Parganas.

INSOLVENCY CASE No. 511 OF 1934.

Shaikh Baftu of 40, Beltala Road, police-station Ballygunge, applicant.

To Mathura Tewary of 2-B, Puddopuker Road, police-station Bhowanipore, and others, creditors.

ON the 14th day of December 1934 it was ordered that the matter of the petition of the applicant be heard on the 11th day of February 1935, and that the said applicant do attend to be examined by this Court on that date.

J. N. SEN, Sub-Judge.

Alipore, the 15th December 1934. (14—1)

In the 4th Court of the Sub-Judge of 24-Parganas.

INSOLVENCY CASE No. 513 OF 1934.

Nakul Chandra Mondal of No. 116, Lot, police-station Mathurapore, applicant.

To Jogomohon Koyal of Mathurapore, and others, creditors.

ON the 14th day of December 1934 it was ordered that the matter of the petition of the applicant be heard on the 11th day of February 1935, and that the said applicant do attend to be examined by this Court on that date.

J. N. SEN, Sub-Judge.

Alipore, the 18th December 1934. (15- 1)

NOTICE TO CREDITORS OF APPLICATION FOR DISCHARGE.

Section 41 (*1*) of the Provincial Insolvency Act, V of 1920.

In the 4th Court of the Sub-Judge at Alipore.

INSOLVENCY CASE NO. 47 OF 1934.

A. Middleton of 22C, Traffic Quarters, Belgachia, 24-Parganas, applicant.

TAKE notice that the abovenamed insolvent has applied at the Court for his discharge, and that the Court has fixed the 11th day of February 1935 at 11 o'clock for hearing the application.

Dated this 14th day of December 1934.

J. N. SEN, Sub-Judge.

(33—1)

NOTICE TO CREDITORS OF APPLICATION FOR DISCHARGE.

Section 41 (*1*) of the Provincial Insolvency Act, V of 1920.

In the 4th Court of the Sub-Judge at Alipore.

INSOLVENCY CASE NO. 91 OF 1934.

G. L. Smith of 79, Traffic Quarters, Sealdah, applicant.

TAKE notice that the abovenamed insolvent has applied at the Court for his discharge, and that the Court has fixed the 11th day of February 1935 at 11 o'clock for hearing the application.

Dated this 14th day of December 1934.

J. N. SEN, Sub-Judge.

(36—1)

NOTICE TO CREDITORS OF APPLICATION FOR DISCHARGE.

Section 41 (*1*) of the Provincial Insolvency Act, V of 1920.

In the 4th Court of the Sub-Judge at Alipore.

INSOLVENCY CASE NO 92 OF 1934.

E. C. Fulton of Sealdah Station, 24-Parganas, applicant.

TAKE notice that the abovenamed insolvent has applied at the Court for his discharge, and that the Court has fixed the 11th day of February 1935 at 11 o'clock for hearing the application.

Dated this 14th day of December 1934.

J. N. SEN, Sub-Judge.

(37—1)

NOTICE TO CREDITORS OF APPLICATION FOR DISCHARGE.

Section 41 (*1*) of the Provincial Insolvency Act, V of 1920.

In the 4th Court of the Sub-Judge at Alipore.

INSOLVENCY CASE NO. 467 OF 1933.

Shaikh Babujan of Fingepara, Bhatpara, police-station Jagaddul, applicant.

TAKE notice that the abovenamed insolvent has applied at the Court for his discharge, and that the Court has fixed the 11th day of February 1935 at 11 o'clock for hearing the application.

Dated this 14th day of December 1934.

J. N. SEN, Sub-Judge.

(38—1)

In the 4th Court of the Sub-Judge of 24-Parganas.

INSOLVENCY CASE No. 515 OF 1934.

W. R. Smith of Jhool Road, Cossipore, Calcutta, applicant.

To Mahadeolal and Bros. of 1, Tikiapara Road, Howrah, and others, creditors.

ON the 13th day of December 1934 it was ordered that the matter of the petition of the applicant be heard on the 11th day of February 1935, and that the said applicant do attend to be examined by this Court on that date.

J. N. SEN, Sub-Judge.

Alipore, the 21st December 1934. (134—1)

In the 4th Court of the Sub-Judge of 24-Parganas.

INSOLVENCY CASE No. 517 OF 1934.

Panchu Gopal Gupta of 12A, Lansdowne Road, police, station Ballygunge, applicant.

To Ganendra Nath Mukherjee of 77B, Monsatolla Lane, Khiddirpore, Calcutta, and others, creditors.

ON the 15th day of December 1934 it was ordered that the matter of the petition of the applicant be heard on the 11th day of February 1935, and that the said applicant do attend to be examined by this Court on that date.

J. N. SEN, Sub-Judge.

Alipore, the 20th December 1934. (135—1)

ORDER ANNULLING ADJUDICATION.

Section 43 of the Provincial Insolvency Act, V of 1920.

In the 4th Court of the Sub-Judge at Alipore.

INSOLVENCY APPLICATION No. 518 of 1933.

Thakur Shaw, applicant.

WHEREAS Thakur Shaw of No. 7, Guripara Road, police-station Intally, does neither appear nor apply for discharge within the specified time fixed, it is ordered that the order of adjudication, dated 14th July 1934, against the debtor, be and the same is hereby annulled.

Dated this 15th day of January 1935.

J. N. SEN, Sub-Judge.

ORDER ANNULLING ADJUDICATION.

Section 43 of the Provincial Insolvency Act, V of 1920.

In the 4th Court of the Sub-Judge at Alipore.

INSOLVENCY APPLICATION No. 78 OF 1934.

Ajodhya Singh, applicant.

WHEREAS Ajodhya Singh of 103, Beliaghata Railway quarters, police-station Beliaghata, does neither appear nor apply for discharge within the specified time fixed, it is ordered that the order of adjudication, dated 7th July 1934, against the debtor be and the same is hereby annulled.

Dated this 9th day of January 1935.

J. N. SEN, Sub-Judge.

ORDER ANNULLING ADJUDICATION.

Section 43 of the Provincial Insolvency Act, V of 1920.

In the 4th Court of the Sub-Judge at Alipore.

INSOLVENCY APPLICATION No. 107 OF 1934.

Mukanda Chandra Paul, applicant.

WHEREAS Mukanda Chandra Paul does neither appear nor apply for discharge within the specified time fixed, it is ordered that the order of adjudication, dated 14th July 1934, against the debtor be and the same is hereby annulled.

Dated this 15th day of January 1935.

J. N. SEN, Sub-Judge.

ORDER ANNULLING ADJUDICATION.

Section 43 of the Provincial Insolvency Act, V of 1920.

In the 4th Court of the Sub-Judge at Alipore.

INSOLVENCY APPLICATION No. 112 OF 1934.

Jagdas Tamta, applicant.

WHEREAS Jagdas Tamta of Gauripore, police-station Naihati, does neither appear nor apply for discharge within the specified time fixed, it is ordered that the order of adjudication, dated 7th July 1934, against the debtor be and the same is hereby annulled.

Dated this 9th day of January 1935.

J. N. SEN, Sub-Judge.

ORDER ANNULLING ADJUDICATION.

Section 43 of the Provincial Insolvency Act, V of 1920.

In the 4th Court of the Sub-Judge at Alipore.

INSOLVENCY APPLICATION No. 135 OF 1934.

Lagan Muchi, applicant.

WHEREAS Lagan Muchi of Bijpore, Kanchrapara, 24-Parganas, does neither appear nor apply for discharge within the specified time fixed, it is ordered that the order of adjudication, dated 14th July 1934, against the debtor be and the same is hereby annulled.

Dated this 15th day of January 1935.

J. N. SEN, Sub-Judge.

ORDER ANNULLING ADJUDICATION.

Section 43 of the Provincial Insolvency Act, V of 1920.

In the 4th Court of the Sub-Judge at Alipore.

INSOLVENCY APPLICATION No. 139 OF 1934.

Rangai Pashi, applicant.

WHEREAS Rangai Pashi of Ichhapore, post office Nawpara, 24-Parganas, does neither appear nor apply for discharge within the specified time fixed, it is ordered that the order of adjudication, dated 14th July 1934, against the debtor be and the same is hereby annulled.

Dated this 15th day of January 1935.

J. N. SEN, Sub-Judge.

ORDER ANNULLING ADJUDICATION.

Section 43 of the Provincial Insolvency Act, V of 1920.

In the 4th Court of the Sub-Judge at Alipore.

INSOLVENCY APPLICATION No. 189 OF 1934.

Purna Sashi Bose, applicant.

WHEREAS Purna Sashi Bose of Panihati, police station Khardah, does neither appear nor apply for discharge within the specified time fixed, it is ordered that the order of adjudication, dated 14th July 1934, against the debtor be and the same is hereby annulled.

Dated this 15th day of January 1935.

J. N. SEN, Sub-Judge.

WANTED an Assistant Master to teach general subjects for Victoria School, Kurseong, for the term commencing in March 1935. The appointment will be temporary and the pay offered is Rs. 250 (Rupees two hundred and fifty only) fixed. The selected candidate will be provided with free quarters.

Candidates, who should be British subjects, either European or Anglo-Indian, and not above 35 years of age, must possess a good degree of a recognised University and have had some teaching experience.

Applications together with copies of not more than 3 recent testimonials should reach the Head Master, Victoria School, Kurseong (Darjeeling district) not later than 31st January 1935.

WANTED a Muhammadan teacher for the Karaya Moslem Boys' Middle English School, Calcutta, on a monthly salary of Rs. 50 *less* 5 per cent. emergency cut in the scale of Rs. 50—4/2—90—5/2—100. Preference will be given to a B.Sc., with experience in teaching and competent to teach Geography and Science in Classes V and VI.

The application containing the following information should be submitted to this office on or before the 15th February 1935 :—

(1) Name of father.
(2) Native place—
(*a*) Village.
(*b*) Post Office.
(*c*) Thana.
(*d*) District.

(3) Age on 1st March 1935 (calculated according to the Matriculation Certificate).
(4) Whether competent to impart instruction through the medium of Urdu.
(5) Athletic qualification.
(6) Teaching experiences.

J. M. SEN,
Inspector of Schools, Presidency Division.

40/1A, Free School Street, Calcutta, the 24th January 1935.

WANTED an experienced Head Clerk and Accountant for the District Engineer's office, Dinajpur, on a salary of Rs. 100—5—150 per month. None need apply who is not a passed Accountant and qualified under the rules. Applications stating age, qualifications, past services, native village and district and place of residence of the candidate with copies of certificates and testimonials, will be received by the undersigned up to the 7th February next. The selected candidate will be on probation for one year and will not be allowed joining travelling allowance. He will have to join by the 1st March next.

JATINDRA MOHAN SEN, Chairman, District Board.

Dinajpur, the 23rd January 1935. (257—1)

Road Cess Notification.

THE District Board of Chittagong has fixed the rate of road cess for the year 1935-36 at 6 pies in a rupee as in the year 1934-35 as per resolution No.1, dated 11th January 1935.

M. A. AZIM, Chairman.

Chittagong, the 23rd January 1935. (294—3)

Road Cess Notification.

THE District Board of Bakarganj at their special meeting on the 15th January 1935, resolved, under section 46 of the Bengal Local Self-Government Act, to levy road cess during the ensuing cess year 1935-36, at the maximum rate, viz., one-half anna per rupee of the value of land, etc.

S. N. GHOSH, Secretary.

Barisal, the 25th January 1935.

(302—1)

Road Cess Notification.

THE District Board of Jalpaiguri at their special meeting held on the 17th January 1935, resolved to levy road cess in the Jalpaiguri district during the year 1935-36 at the maximum rate of six pies in the rupee on the annual value of lands, etc.

J. G. GUHA, Chairman.

Jalpaiguri, the 25th January 1935.

(303—1)

THE Bengal and Madras Service Family Pension Fund which is provisionally managed and assisted by Government has for its object the provision of monthly pensions for the maintenance of the widows and children of subscribers and is open, with certain exceptions, to all active and pensioned members of the Uncovenanted service of Government (except those serving under the Government of Bombay), and to Local Fund servants earning pensions from Government. Some of the special features of the fund are (1) that widowed daughters incapable of re-marriage or children labouring under such mental or bodily infirmities as incapacitate them from earning their livelihood or preclude the possibility of marriage (in case of a daughter) are admitted to its benefits ; and (2) that subscribers to the Widows and Daughters' branches are entitled to a refund of 30 per cent. of the premia paid, should the nominee predecease them after five years of admission. The second quinquennial valuation of the Fund has been completed by the Actuary to the Government of India, and his report discloses very favourable results. For forms of application and rules of the Fund apply to the Accountant-General, Bengal, Imperial Secretariat Buildings, Calcutta.

NOTICE is hereby given that all exhibits filed in cases disposed of in this Court during the year 1932 will be destroyed if not taken back before 31st March 1935 by the parties who filed them.

N. N. GUPTA, Municipal Magistrate, Calcutta.

Town Hall, Calcutta, the 9th January 1935.

NOTICE is hereby given that all exhibits filed in cases disposed of in this Court during the year 1932 will be destroyed if not taken back before 31st March 1935 by the parties who filed them.

A. MAJID, Municipal Magistrate, Calcutta.

Town Hall, Calcutta, the 9th January 1935.

Custom House Notice.

NOTICE is hereby given that whereas Messrs. J. F. Madan have failed to pay duty on the undermentioned cases of Whisky, Brandy and Gin, the said goods will be sold by auction on the 13th February 1935, at noon at Messrs. Mackenzie Lyall & Co.'s Sale Room under the provisions of section 119 of the Sea Customs Act :—

50 cases Whisky marked (T) under W. R. No. 115 of 22-10-31.
Calcutta
out of No. 1/60

5 cases Gin marked J. F. M. Calcutta 1/25 W. R. No. 114 of 22-10-31.

30 cases Gin marked J. F. M. Calcutta W. R. No. 89 of 15-10-31.

49 cases Brandy marked J. F. M. Calcutta W. R. No. 58 of 16-11-31.
out of No. 1555/1604

W. J. WARD, Collector of Customs (offg.).

Custom House, Calcutta, the 22nd January 1935.

(281—2)

Irrigation Department, Bengal.

IN accordance with rule 26 of the Navigation Rules of the Hijli Tidal Canal and portion of Orissa Coast Canal issued under section 11 of the Canals Act (Bengal Act V of 1864) and published under Irrigation Department notification No. 8, dated the 25th May 1915, notice is hereby given for general information that the Balughye Main Drain of the Orissa Coast Canal from 0 mile at Surpai to 11¼ mile at Kharika Patna (11¼ miles in length) will remain closed to traffic for two months from 1st March 1935 to 30th April 1935, both days inclusive, for the purpose of silt clearance.

S. C. MAJUMDAR,

Superintending Engineer, South-Western Circle (offg.).

Calcutta, the 29th January 1935.

Spicer Pegler & Co.

NOTICE is hereby given that the partnership heretofore subsisting between Ernest Evan Spicer, Ernest Charles Pegler, James Rutherford, Henry Ernest Spry, Charles Hughes, Adriaan Evan Spicer, Frederick Graham Roberts and Geoffrey Charles Moffatt Spry carrying on business as Accountants at No. 5, Fairlie Place, Calcutta, under the style or rm of Spicer Pegler and Company has been dissolved by mutual consent as from the 1st day of December 1934.

All debts due to and owing by the said late firm will be received and paid respectively by Frederick Graham Roberts who will continue to carry on the said business under the style or firm of Graham Roberts & Co.

Dated the 22nd day of January 1935.

ERNEST EVAN SPICER.
F. G. ROBERTS.

(256—1)

Lost.

THE Government Promissory Note No. 099539 of the 3 per cent. loan of 1896-97 for Rs. 500 originally standing in the name of Nuffar Chandra Ghoshal, the proprietor, by whom it was never endorsed to any other person, having been lost, notice is hereby given that payment of the above note and the interest thereupon have been stopped at the Public Debt Office, Imperial Bank of India, Calcutta, and that application is about to be made for the issue of duplicate in favour of the proprietor. The public are cautioned against purchasing or otherwise dealing with the above-mentioned security.

Signature of the advertiser—Nuffar Chandra Ghoshal.

Residence—Village Joynagar, post office Gangadharpur, district Howrah.

(312—3)

Lost, Stolen or Destroyed.

THE Government Promissory Note No. 075328 of the 3½ per cent. loan of 1854-55 for Rs. 500, originally standing in the name of Prosad Das Boral and Brothers, and last endorsed to Tulsi Das Dey (since deceased), the proprietor, by whom it was never endorsed to any other person, having been lost, stolen or destroyed, notice is hereby given that payment of the above note and the interest thereupon have been stopped at the Public Debt Office, Imperial Bank of India, Calcutta, and that application is about to be made for the issue of duplicate in favour of Lalit Mohan Dey. The public are cautioned against purchasing or otherwise dealing with the abovementioned security.

Signature of the advertiser—Lalit Mohan Dey.

Residence—13, Kailash Bose Street, Calcutta.

(100—3)

IN THE HIGH COURT OF JUDICATURE AT FORT WILLIAM IN BENGAL.

Ordinary Original Civil Jurisdiction.

In the matter of the Indian Companies Act, and

In the matter of Standard Sanitary Agency, Limited.

NOTICE is hereby given that a petition for the winding up of the abovenamed Company by the High Court of Judicature at Fort William in Bengal was on the 21st day of January 1935 presented to the said Court by Narendra Nath Banerjee, Sarat Chandra Bhattacharyya, Hem Chandra Chakravarty and Basanta Kumar Das, the shareholders of the said Company, and that the said petition is directed to be heard before the Court on the 18th day of February 1935; and that any creditor or contributory of the said Company desirous of opposing an order for the winding up of the said Company under the above Act should appear at the time of hearing by himself or his Attorney or Advocate for that purpose; and a copy of the petition will be furnished to any creditor or contributory of the said Company requiring the same, by the undersigned, on payment of the prescribed charge for the same.

Dated the 21st day of January 1935.

M. H. HUQ, Attorney for the petitioners,
9, Old Post Office Street, Calcutta.

Note.—Rule 41 provides that any person who intends to appear on the hearing of the said petition must serve on or send by post to the abovenamed notice in writing of his intention so to do. The notice must state the name and address of the person, or, if a firm, the name and address of the firm and must be signed by the person or firm or his or their attorney (if any) and must be served, or if posted, must be sent by post in sufficient time to reach the abovenamed not later than two clear days before the 18th day of February 1935.

(280—1)

In the matter of the Indian Companies Act, 1913, and

In the matter of the Comilla Popular Provident Insurance Society.

AT an extraordinary general meeting of the members of the abovenamed Society, duly convened, and held at its registered office at Comilla on the 6th day of January 1935, the following extraordinary resolution was duly passed :—

"That it has been proved to the entire satisfaction of this meeting that the Society cannot by reason of its liabilities continue its business, and that it is advisable to wind up the same, and at the same meeting Sj. Susil Chandra Das, c-o late Nabin Chandra Das, Lamapara, Comilla, was appointed liquidator for the purposes of such winding up."

Dated this 6th day of January 1935.

UMESH CH. DATTA, Chairman.

(223—1)

In the matter of the Indian Companies Act, 1913, and

In the matter of the Comilla Popular Provident Insurance Society.

NOTICE is hereby given that a meeting of the creditors of the abovenamed Society will be held on the 6th February 1935 at 4-30 p.m. at the office of the Society (Talpukurpar), Comilla.

SUSIL CHANDRA DAS, Liquidator.

Comilla, the 6th January 1935. (250—1)

In the matter of Indian Companies Act, 1913, and

In the matter of the Ramkrishna Insurance Society.

AT an extraordinary general meeting of the abovenamed Society duly convened and held at Bankura on the 21st October 1934, the following resolution, and at a subsequent extraordinary general meeting of the members of the said Society, also duly convened and held at the same place on the 7th November 1934, the following resolution was duly confirmed as a special resolution :—

" Resolved unanimously that the Ramkrishna Insurance Society be wound up voluntarily and that Mr. H. C. Das, Incorporated Accountant, be appointed liquidator of the Society."

R. P. CHOUDHURY, Chairman.

Calcutta, the 22nd January 1935. (249—1)

In the matter of the Indian Companies Act, VII of 1913, and

In the matter of the Kasbeswari Insurance Company (in liquidation).

NOTICE is hereby given, pursuant to section 209, that a meeting of the creditors of the abovenamed Company in voluntary winding up shall be held on the 22nd day of February 1935, at the liquidator's office at Kamalasagar, Tippera, at 10-30, a.m.

JAGAT HARI ROY, Liquidator.

Kamalasagar, the 25th January 1935. (289—1)

In the matter of the Indian Companies Act, and

In the matter of the Bengal Oriental Insurance Co., Ltd.

NOTICE is hereby given that the Bengal Oriental Insurance Co., Ltd., has, by an extraordinary resolution passed in an extraordinary general meeting of the said Company held on 20th January 1935, been put into voluntary liquidation and Sj. Charu Chandra Choudhury, c-o Sj. Rashamoy Choudhury, Gangchar, Comilla, has been appointed liquidator.

CHARU CH. CHAUDHURY, Liquidator.

Comilla, the 24th January 1935. (297—1)

In the matter of the Indian Companies Act, and

In the matter of the Bengal Oriental Insurance Co., Ltd.

NOTICE is hereby given that a meeting of the creditors of the Bengal Oriental Insurance Co., Ltd., will be held on 13th February 1935, at 4-30 p.m., in the house of Sj. Rashamoy Choudhury, Gangchar, Comilla.

CHARU CH. CHAUDHURY, Liquidator.

Comilla, the 24th January 1935. (298—1)

In the matter of the Indian Companies Act, 1913 (VII of 1913), and

In the matter of Great India Transport and Engineering, Ld.

NOTICE is hereby given that the name of Great India Transport and Engineering, Ld., has, this day in pursuance of section 247 of the Act, been struck off the register and that the Company is dissolved.

N. K. MAJUMDER, Registrar,
Joint Stock Companies, Bengal.

Calcutta, the 22nd January 1935.

In the matter of the Indian Companies Act, 1913 (VII of 1913), and

In the matter of Bharat Films, Ld.

NOTICE is hereby given that the name of Bharat Films, Ld., has, this day in pursuance of section 247 of the Act, been struck off the register and that the Company is dissolved.

N. K. MAJUMDER, Registrar,
Joint Stock Companies, Bengal.

Calcutta, the 22nd January 1935.

In the matter of the Indian Companies Act, 1913 (VII of 1913), and

In the matter of Kalikanagar Tea Co., Ld.

NOTICE is hereby given that the name of Kalikanagar Tea Co., Ld., has, this day in pursuance of section 247 of the Act, been struck off the register and that the Company is dissolved.

N. K. MAJUMDER, Registrar,
Joint Stock Companies, Bengal.

Calcutta, the 22nd January 1935.

In the matter of the Indian Companies Act, 1913 (VII of 1913), and

In the matter of International Engineering and Commercial, Ld.

NOTICE is hereby given that, on the expiration of three months from date, the name of International Engineering and Commercial, Ld., will, unless cause is shown to the contrary, be struck off the register, and the Company will be dissolved.

N. K. MAJUMDER, Registrar of Companies
under Act VII of 1913.

Calcutta, the 22nd January 1935.

In the matter of the Indian Companies Act, 1913 (VII of 1913), and

In the matter of L. N. Agarwalla, Ld.

NOTICE is hereby given that, on the expiration of three months from date, the name of L. N. Agarwalla, Ld., will, unless cause is shown to the contrary, be struck off the register, and the Company will be dissolved.

N. K. MAJUMDER, Registrar of Companies
under Act VII of 1913.

Calcutta, the 22nd January 1935.

In the matter of the Indian Companies Act, 1913 (VII of 1913), and

In the matter of the General Industrial Agency, Ld.

NOTICE is hereby given that, on the expiration of three months from date, the name of the General Industrial Agency, Ld., will, unless cause is shown to the contrary, be struck off the register, and the Company will be dissolved.

N. K. MAJUMDER, Registrar of Companies
under Act VII of 1913.

Calcutta, the 22nd January 1935.

In the matter of the Indian Companies Act, 1913 (VII of 1913), and

In the matter of Paul and Co., Jewellers, Ld.

NOTICE is hereby given that, on the expiration of three months from date, the name of Paul and Co., Jewellers, Ld., will, unless cause is shown to the contrary, be struck off the register, and the Company will be dissolved.

N. K. MAJUMDER, Registrar of Companies
under Act VII of 1913.

Calcutta, the 22nd January 1935.

In the matter of the Indian Companies Act, 1913 (VII of 1913), and

In the matter of the Small Industries Development Co., Ld.

NOTICE is hereby given that, on the expiration of three months from date, the name of the Small Industries Development Co., Ld., will, unless cause is shown to the contrary, be struck off the register, and the Company will be dissolved.

N. K. MAJUMDER, Registrar of Companies
under Act VII of 1913.

Calcutta, the 22nd January 1935.

In the matter of the Indian Companies Act, 1913 (VII of 1913), and

In the matter of Railways, Limited.

NOTICE is hereby given that, on the expiration of three months from date, the name of Railways, Limited, will, unless cause is shown to the contrary, be struck off the register, and the Company will be dissolved.

N. K. MAJUMDER, Registrar of Companies
under Act VII of 1913.

Calcutta, the 22nd January 1935.

In the matter of the Indian Companies Act, 1913 (VII of 1913), and

In the matter of Paris Collapsible Gate and Co., Ld.

NOTICE is hereby given that, on the expiration of three months from date, the name of Paris Collapsible Gate and Co., Ld., will, unless cause is shown to the contrary, be struck off the register, and the Company will be dissolved.

N. K. MAJUMDER, Registrar of Companies
under Act VII of 1913.

Calcutta, the 22nd January 1935.

Imperial Library.

(Secretariat Buildings, 6, Esplanade East, Calcutta.)
Open on—

Week days and Saturdays from 10 a.m. to 7 p.m
Sundays and Gazetted holidays from 2 p.m. to 5 p.m.

THE Imperial Library is also a Lending Library. It is free to all except children. There is no subscription to pay.

K. M. ASADULLAH, Librarian.

CINCHONA FACTORY PRODUCTS.

By order of the Government of Bengal Cinchona Factory Products as manufactured and packed at the Cinchona Factory, Mungpoo, Darjeeling district, will be sold and distributed by the Superintendent of the **Presidency Jail**, *in original packages* as received from the Mungpoo Factory, at the rates herein noted **from the 1st May 1926**:—

Quinine Sulphate.

For 60 lbs. and upwards at a time .. Rs. 18 per lb.
For 6 lbs. and over but less than 60 lbs. at a time .. .. .. „ 19 „
For any quantity less than 6 lbs. .. „ 20 „

Quinine Bisulphate.

Irrespective of quantity .. Rs. 20 per lb.

Quinine Hydrobromide.

Irrespective of quantity .. Rs. 25 per lb.

Quinine Salicylate.

Irrespective of quantity .. Rs. 26 per lb.

Quinine Bihydrobromide.

Irrespective of quantity .. Rs. 28 per lb.

Totaquina.

Irrespective of quantity .. Rs. 13-8 per lb.

Quinine Hydrochloride.

For 60 lbs. and upwards at a time .. Rs. 23 per lb.
For 6 lbs. and over but less than 60 lbs. at a time .. .. .. „ 24 „
For any quantity less than 6 lbs. .. „ 25 „

Quinine Di-Hydrochloride.

For 60 lbs. and upwards at a time .. Rs. 25 per lb.
For 6 lbs. and over but less than 60 lbs. at a time .. .. .. „ 26 „
For any quantity less than 6 lbs. .. „ 27 „

Quinidine Sulphate.

For 60 lbs. and upwards at a time .. Rs. 20 per lb.
For 6 lbs. and over but less than 60 lbs. at a time .. .. .. „ 21 „
For any quantity less than 6 lbs. .. „ 22 „

Cinchonidine Sulphate.

For 60 lbs. and upwards at a time .. Rs. 25 per lb.
For 6 lbs. and over but less than 60 lbs. at a time .. .. .. „ 26 „
For any quantity less than 6 lbs. .. „ 27 „

Cinchonine Sulphate.

For 60 lbs. and upwards at a time .. Rs. 12 per lb.
For 6 lbs. and over but less than 60 lbs. at a time .. .. .. „ 13 „
For any quantity less than 6 lbs. .. „ 14 „

Cinchona Febrifuge (Powder).

For 60 lbs. and upwards at a time .. Rs. 9 per lb.
For 6 lbs. and over but less than 60 lbs. at a time .. .. .. „ 9 „
For any quantity less than 6 lbs. .. „ 10 „

Cinchona Febrifuge (Tablets).

For 60 lbs. and upwards at a time .. Rs. 10 per lb.
For 6 lbs. and over but less than 60 lbs. at a time .. .. .. „ 10 „
For any quantity less than 6 lbs. .. „ 11 „

Quinoidine (Tablets).

For 60 lbs. and upwards at a time .. Rs. 5 per lb.
For 6 lbs. and over but less than 60 lbs. at a time .. .. .. „ 5 „
For any quantity less than 6 lbs. .. „ 6 „

Quinoidine (in Mass).

For 60 lbs. and upwards at a time .. Rs. 4 per lb.
For 6 lbs. and over but less than 60 lbs. at a time .. .. .. „ 4 „
For any quantity less than 6 lbs. .. „ 5 „

Cinchona Bark (in 50 pound original bags).

Per bag .. .. .. Rs. 25.

per box of 200 tablets each.

Quinine Tablets—

Rs. 2-8 (Bengal), Rs. 3 (outside Bengal)

Rs. 15-8-0 per lb.

Transit charges extra in every case.

Quinine Sulphate is for sale to Government Institutions and Missionaries only. It is not for sale to Private Firms or the General Public.

Cinchona Febrifuge in Powder and Tablet form (when in stock) is for sale to Government Institutions, Missionaries and the General Public.

Quinine Sulphate will be supplied to Hospitals and Dispensaries of this Presidency only at the wholesale rate of Rs. 18 per lb., irrespective of quantities. For all other purchasers the rates given above will apply.

Five and ten boxes of Quinine Tablets are sold to the public at the concession rates which will be intimated on application.

Provinces other than Bengal, Bihar and Orissa and Assam will get their supplies of Sulph. Quinine from the Director, Botanical Survey of India, Sibpur, Howrah.

Local sale at the jail gate from 10 to 12 noon.

The system of payment is by—*Cash in advance*—by "*Treasury Challans*," which should accompany the order or indent.

In cases where this is not possible, payment should be made by "*Remittance Transfer Receipts*" or crossed "*Cheques*."

Indents unaccompanied by cash in advance will be sent Value Payable Post. Credit sale is not allowed except under special circumstances.

In the case of *Government officers* payments will be recovered by *Book Transfer, i.e., Countersigned Invoices*, in the event of *Cash* not accompanying the indent by "*Treasury Challans*," *Remittance Transfer Receipt or Cheque*.

2. Price and postage must accompany the price of the drug (when the drug is required by post).

The name of the Railway and Steamer Station or Post Office must be written distinctly when the parcels are required by Rail, Steamer or by Post. Railway parcels are sent by passenger train only.

A scale of postage is given below.

	1 oz.	2 ozs.	4 ozs.	¼ lb.	½ lb.	1 lb.
	As.	As.	As.	As.	As.	Rs. A.
Quinine Sulph. ..	..	..	7	7	11	0 11
Cinchona Feb. ..	..	..	7	7	11	0 11
Cinchona Feb. Tablets	..	..	7	7	11	0 11
Quinoidine Tablets ..	..	..	..	..	..	1 13
Quinine Hydrochlor. ..	5	5	7	7	..	0 11
Quinine Di-hydrochlor.	5	5	7	7	..	0 11
Quinine Tablets ..	..	..	7	7	11	0 11

	1½ lb.	2 lb.	3 lb.	4 lb.	5 lb.	6 lb.
	Rs. A.	Rs. A.	Rs. A.	Rs. A.	Rs. A.	Rs. A.
Quinine Sulph. ..	0 15	1 3	1 7	1 15	2 7	2 15
Cinchona Feb. ..	0 15	0 15	1 7	1 11	1 15	2 7
Cinchona Feb. Tablets	1 3	1 3	1 11	1 15	2 7	2 15
Quinoidine Tablets ..	..	2 3	3 3	..	..	..
Quinine Hydrochlor. ..	1 1	0 15	1 7	1 11	..	..
Quinine Di-hydrochlor.	1 1	0 15	1 13	2 5	..	..
Quinine Tablets ..	0 15	0 14	1 7	1 11	1 15	2 3

Two different drugs are not packed in the same parcel and postage must be paid separately for each kind.

N.B.—Postage stamps are not accepted as revenue.

Government reserve the right to alter the price without notice.

Registered No. C207

No. 5 of 1935

The Calcutta Gazette

THURSDAY, JANUARY 31, 1935.

CONTENTS:

	Page.		Page.
Statement under the Cotton Ginning and Pressing Factories Act, 1925 ..	177	Weather and Crop Report for the week ending 23rd January 1935	201—204
Return of Vital Statistics for the month of June 1934	178—183	Prices-current (wholesale and retail) of food-grains, salt, etc., in the districts of Bengal for the first half of January 1935	205—208
Daily Rainfall recorded in Bengal for the month of December 1934	184—199	Final Forecast of the Sugarcane Crop of Bengal, 1934-35	209—211
Calcutta Improvement Trust Notices ..	200	Statements of weekly gauge readings on certain rivers in Bengal	212—213
Corporation of Calcutta Notice ..	200		

SUPPLEMENT.

Official Papers.

FORM C—BENGAL.

STATEMENT OF COTTON PRESSED IN THE BENGAL PRESIDENCY FOR THE WEEK ENDING THE 18th JANUARY 1935.

[Section 5(2) of the Cotton Ginning and Pressing Factories Act, 1925.]

Name of Division or block.	Number of bales pressed.				Districts included in the block.
	During the week.	During the corresponding week last year.	Since 1st September 1934 (the date prescribed by the Local Government as the commencement of the season).	During the corresponding period last year.	
The Bengal Presidency	352 or 350·86 bales of 400 lbs. each.	632	3,020	4,305	All districts in the Presidency.

J. B. McBride,

Chief Inspector of Factories, Bengal.

Vital Statistics for the month of June 1934 of the

Districts.	No.	Towns.	Population under registration according to census of 1931.			Births registered.		Deaths							
			Male.	Female.	Total.	Number registered (excluding still-births).	Still-born number registered.	Cholera.	Small-pox.	Plague.	Malaria.	Enteric fever.	Measles.	Relapsing fever.	Kala-azar.
Burdwan ..	1	Burdwan	23,485	16,133	39,618	30	..	1	2	..	3	1	..	..	2
	2	Raniganj	9,162	7,211	16,373	35	1	1	1	..	..	1	1	..	..
	3	Asansol ..	18,710	12,576	31,286	39	1	1	1	..	..	..	..	..	..
Birbhum ..	4	Suri ..	6,089	4,819	10,908	4	..	..	..	..	..	..	..	..	..
Bankura ..	5	Bankura	17,280	14,423	31,703	29	..	..	..	..	..	..	1	..	..
	6	Vishnupur	9,767	9,929	19,696	14	..	..	..	..	1	..	..	..	..
	7	Sonamukhi	5,337	5,652	10,989	18	..	..	..	..	..	..	..	..	..
Midnapore ..	8	Midnapur	17,807	14,214	32,021	29	..	..	1	..	..	..	..	..	..
	9	Ghatal ..	6,422	5,978	12,400	16	..	..	..	..	..	..	..	..	..
Hooghly ..	10	Hooghly-Chinsura.	18,799	13,835	32,634	56	4	..	1	..	1	4	..	..	..
	11	Bansberia	9,797	4,424	14,221	9	1	..	1	..	5	..	1	..	..
	12	Serampur	23,985	15,071	39,056	50	..	3	1	..	..	1	..	..	..
	13	Rishra-Konnagar.	17,528	9,340	26,868	25	..	1	..	..	..	1	..	..	..
	14	Baidyabati	10,369	8,117	18,486	13	..	..	..	..	..	..	..	..	..
	15	Bhadreswar	14,938	8,054	22,992	16	..	..	2	..	..	..	1	..	..
	16	Champdani	17,497	7,868	25,365	32	..	..	..	..	1	..	2	..	..
Howrah ..	17	Howrah ..	145,120	79,753	224,873	402	27	61	..	..	5	20	..	..	..
	18	Bally ..	20,044	9,403	30,347	26	2	3	..	..	..	..	..	..	..
24-Parganas ..	19	South Suburban.	22,183	17,316	39,499	46	..	8	3	..	6	4	..	..	..
	20	Tollyganj	14,800	9,676	24,476	35	..	1	..	..	3	..	..	..	..
	21	Budge-Budge.	15,514	8,669	24,183	16	..	1	3	..	1	1	..	..	..
	22	Baranagar	23,116	13,934	37,050	47	..	2	2	..	..	1	..	..	..
	23	Kamarhati	20,107	10,247	30,354	35	..	3	1	..	..	..	..	..	..
	24	Rajpur ..	5,788	5,645	11,433	16	..	..	..	..	..	1	..	..	..
	25	South Dum-Dum.	11,983	6,488	18,471	28	..	1	..	..	..	4	..	..	..
	26	Barrackpur	16,320	9,075	25,395	16	..	..	..	..	..	..	..	..	..
	27	Panihati	6,738	4,961	11,699	16	1	..	..	..	..	..	..	..	..
	28	North Barrackpur.	9,751	6,507	16,258	22	..	..	1	..	..	3	..	..	..
	29	Titagarh	34,252	15,332	49,584	47	1	..	..	..	..	..	..	..	..
	30	Garulia ..	9,282	4,751	14,033	10	..	..	..	..	2	..	..	..	..
	31	Naihati ..	20,123	10,785	30,908	13	..	..	..	..	..	..	..	..	..
	32	Halisahar	12,188	4,582	16,770	6	..	1	1	..	..	..	..	..	..
	33	Kanchrapara.	10,113	4,892	15,005	16	..	..	1	..	..	..	..	..	..
	34	Bhatpara	60,134	24,841	84,975	90	2	1	1	..	2	..	3	..	..
	35	Basirhat ..	11,106	10,181	21,287	25	..	..	2	..	3	..	..	..	..
	36	Baduria ..	7,169	6,508	13,677	17	..	..	..	..	..	..	..	..	..
Calcutta ..	37	Calcutta ..	814,948	381,786	1,196,734	1,788	152	157	51	..	43	58	16	..	13
Nadia ..	38	Krishnagar	12,807	11,477	24,284	17	..	..	..	..	..	..	..	..	..
	39	Nabadwip	8,912	9,949	18,861	17	1	..	..	..	..	1	..	..	1
	40	Ranaghat	6,334	5,061	11,395	8	..	..	..	..	3	..	..	..	..
	41	Santipur	12,016	12,976	24,992	52	..	..	..	..	1	..	..	..	..

towns with a population of 10,000 and over in Bengal.

registered.

Other fevers.	Dysentery.	Diarrhœa.	Influenza.	Pneumonia.	Phthisis.	Other respiratory diseases.	Injuries including suicide.	Deaths from child-birth.	Other causes.	Total of all causes.			Total of corresponding month of previous year.			No.	Towns.
										Male.	Female.	Total.	Male.	Female.	Total.		
..	3	2	..	4	1	1	..	..	5	13	12	25	34	23	57	1	Burdwan.
1	..	..	..	6	2	3	..	..	11	13	14	27	17	17	34	2	Raniganj.
12	2	..	..	1	5	1	2	..	18	29	14	43	11	5	16	3	Asansol.
5	..	..	..	..	..	1	1	..	..	4	3	7	3	3	6	4	Suri.
8	..	2	..	1	1	4	2	..	11	19	11	30	10	5	15	5	Bankura.
3	..	2	..	1	..	1	..	..	6	6	8	14	2	10	12	6	Vishnupur.
5	..	..	..	3	..	..	..	..	2	2	8	10	7	3	10	7	Sonamukhi.
3	..	1	..	8	..	..	..	..	15	23	5	28	21	12	33	8	Midnapur.
3	..	5	..	1	..	..	1	..	1	8	3	11	15	10	25	9	Ghatal.
5	1	1	..	2	1	..	2	..	18	22	14	36	31	24	55	10	Hooghly-Chinsura.
..	..	..	..	..	..	..	..	..	1	2	6	8	8	7	15	11	Bansberia.
4	2	..	..	1	1	1	2	..	8	12	12	24	21	13	34	12	Serampur.
3	..	..	..	1	1	1	..	..	1	6	3	9	4	7	11	13	Rishra-Konnagar.
..	..	..	..	..	..	..	..	..	11	6	5	11	11	8	19	14	Baidyabati.
6	..	..	..	1	1	2	..	..	6	12	7	19	6	13	19	15	Bhadreswar
3	..	2	..	6	..	..	1	..	12	15	12	27	12	10	22	16	Champdani.
5	38	44	..	42	31	89	4	2	152	283	210	493	236	234	470	17	Howrah.
2	..	1	..	..	..	2	..	..	7	5	10	15	7	10	17	18	Bally.
..	..	7	..	2	1	4	3	1	13	27	25	52	18	12	30	19	South Suburban.
4	1	1	..	..	..	..	..	..	8	9	9	18	10	6	16	20	Tollyganj.
5	5	..	..	1	2	2	2	..	7	20	10	30	17	13	30	21	Budge-Budge.
3	5	2	..	3	2	3	1	..	15	23	16	39	26	14	40	22	Baranagar.
7	5	3	..	2	1	2	..	..	5	15	14	29	21	17	38	23	Kamarhati.
5	..	..	..	..	..	..	..	..	5	7	4	11	4	4	8	24	Rajpur.
..	1	..	..	2	..	..	..	..	6	10	4	14	9	9	18	25	South Dum-Dum.
2	..	..	..	..	..	1	1	..	2	4	2	6	1	3	4	26	Barrackpur.
..	..	..	..	1	2	..	..	..	7	5	5	10	6	9	15	27	Panihati.
4	1	..	..	2	..	1	..	..	1	8	5	13	7	3	10	28	North Barrackpur.
45	..	..	..	2	..	..	..	1	2	33	17	50	30	25	55	29	Titagarh.
2	..	..	..	1	..	1	..	..	1	5	2	7	1	4	5	30	Garulia.
3	1	1	..	..	1	4	2	..	10	10	12	22	13	10	23	31	Naihati.
..	..	..	..	..	..	..	..	..	3	4	1	5	3	3	6	32	Halisahar.
3	2	..	1	1	..	..	1	..	3	6	6	12	7	6	13	33	Kanchrapara.
23	..	3	..	5	2	1	1	1	9	35	17	52	31	27	58	34	Bhatpara.
1	..	..	..	5	1	..	3	..	4	10	9	19	12	11	23	35	Basirhat.
5	..	1	..	3	..	..	1	..	..	8	2	10	6	9	15	36	Baduria.
149	83	96	33	121	208	265	57	5	799	1,205	949	2,154	1,191	977	2,168	37	Calcutta.
1	1	..	..	..	..	2	..	..	1	3	2	5	5	3	8	38	Krishnagar.
15	2	1	..	..	2	..	1	..	8	10	21	31	16	24	40	39	Nabadwip.
..	..	..	..	3	..	..	..	..	..	4	2	6	3	3	6	40	Ranaghat.
10	1	1	..	3	3	2	..	..	9	18	17	30	19	23	42	41	Santipur.

Vital Statistics for the month of June 1934 of the

Districts.	No.	Towns.	Population under registration according to census of 1931.			Births registered.		Deaths							
			Male.	Female.	Total.	Number registered (excluding still births).	Still-born number registered.	Cholera.	Small-pox.	Plague.	Malaria.	Enteric fever.	Measles.	Relapsing fever.	Kala-azar.
Murshidabad	42	Berhampur	15,106	12,297	27,403	33	2	..	..	..	4	1	..	..	1
	43	Jiaganj-Azimganj.	5,774	5,224	10,998	13	..	..	..	..	..	3	..	..	..
	44	Kandi ..	6,403	6,213	12,616	12	1	..	..	..	..	..	..	..	..
	45	Jangipur	6,283	6,513	12,796	19	..	..	..	..	..	..	2	..	..
Jessore ..	46	Jessore ..	7,084	4,272	11,356	9	..	..	..	..	2	..	..	..	..
Khulna ..	47	Khulna ..	11,968	7,152	19,120	3	..	2		..	1	..	..	..	1
	48	Satkhira ..	6,071	5,170	11,241	11	..	2	..	..	..	..	..	..	..
Rajshahi ..	49	Rajshahi	15,178	11,886	27,064	44	1	..	..	..	1	1	..	..	2
Dinajpur ..	50	Dinajpur	11,763	7,393	19,156	2	..	..	..	..	..	..	..	..	..
Jalpaiguri ..	51	Jalpaiguri	11,995	6,967	18,962	17	..	..	..	..	7	1	..	..	1
Darjeeling..	52	Darjeeling	12,101	9,084	21,185	89	5	..	..	..	4	..	..	..	2
Rangpur ..	53	Rangpur	12,808	7,941	20,749	16	2	1	..	..	1	..	..	..	..
Bogra ..	54	Bogra ..	8,678	6,141	14,819	25	1	..	..	..	..	..	..	..	..
Pabna ..	55	Pabna ..	11,970	9,934	21,904	18	..	..	..	..	2	..	..	..	..
	56	Sirajganj	17,981	14,486	32,467	14	..	..	1	..	11	..	..	..	1
Malda ..	57	English Bazar.	9,387	7,520	16,907	8	..	1	..	..	3	..	..	..	..
	58	Nawabganj	7,497	8,329	15,826	42	1	..	..	..	..	..	..	..	2
Dacca ..	59	Dacca ..	79,365	59,153	138,518	239	13	..	2	..	2	4	..	..	8
	60	Narayanganj	21,526	12,663	34,189	57	1	..	..	..	..	..	..	..	..
Mymensingh	61	Mymensingh	19,733	10,747	30,480	30	2	..	..	..	..	..	1	..	1
	62	Netrakona	6,848	4,132	10,980	13	3	..	..	..	1	..	..	..	..
	63	Jamalpur	12,629	10,448	23,077	19	..	..	..	..	8	..	..	..	..
	64	Sherpur ..	10,545	9,002	19,547	25	1	..	..	..	1	..	..	..	1
	65	Kishorganj	8,624	6,813	15,437	21	..	..	..	..	2	..	..	..	..
	66	Bajitpur ..	5,632	6,018	11,650	2	..	..	..	..	9	..	..	..	..
	67	Tangail ..	8,739	7,343	16,082	18	..	..	..	..	2	..	..	..	..
Faridpur ..	68	Faridpur	9,427	6,089	15,516	9	..	..	..	..	6	..	..	..	..
	69	Madaripur	15,204	11,690	26,894	9	..	..	..	..	..	1	..	..	..
Bakarganj ..	70	Barisal ..	23,588	12,128	35,716	30	..	5	..	..	..	..	..	..	1
	71	Pirojpur ..	6,062	4,897	10,959	13	..	1	..	..	..	..	..	..	..
Chittagong	72	Chittagong	35,049	18,107	53,156	61	2	2	..	..	1	4	..	..	..
Noakhali ..	73	Noakhali	7,808	5,255	13,063	15	..	..	..	..	..	..	..	..	..
Tippera ..	74	Comilla ..	18,530	12,835	31,365	15	1	..	..	..	..	..	..	..	..
	75	Brahmanbaria.	13,973	12,689	26,662	47	..	..	..	..	..	..	..	..	..
	76	Chandpur	11,443	5,395	16,838	12	..	..	..	..	..	..	..	..	..
		Total of month.	2,051,552	1,194,305	3,245,857	4,242	229	260	79	..	143	116	28	..	37
		Total of corresponding month of previous year ..	..	..	..	4,191	218	117	198	..	128	170	49	..	40
		Increase + or decrease—	..	..	..	+51	+11	+143	−119	..	+15	−54	−21	..	−3

Remarks.—1. The above table is compiled from returns collected by the municipalities and submitted to the Director of Public Health by the approximate to the actual in a proportion of cases and in a few instances are obviously incomplete.

2. The vital statistics of municipalities with a population of less than 10,000 have been excluded from this statement and 1918.

3. The birth and death ratios per mille per annum have been omitted from this statement according to Government of India,

Calcutta, the 19th January 1935.

towns with a population of 10,000 and over in Bengal.

registered.

Other fevers.	Dysentery.	Diarrhœa.	Influenza.	Pneumonia.	Phthisis.	Other respiratory diseases.	Injuries including suicide.	Deaths from child-birth.	Other causes.	Total of all causes.			Total of corresponding month of previous year.			No.	Towns.
										Male.	Female.	Total.	Male.	Female.	Total.		
12	2	..	..	1	3	2	3	..	14	24	19	43	18	27	45	42	Berhampur.
2	..	1	..	2	..	..	..	..	2	6	4	10	10	10	20	43	Jiaganj-Azimganj.
1	1	..	..	1	..	..	..	..	5	5	3	8	5	9	14	44	Kandi.
2	..	..	..	2	2	..	1	..	..	7	2	9	6	4	10	45	Jangipur.
2	1	..	..	1	..	1	..	..	4	6	5	11	8	1	9	46	Jessore.
1	3	1	..	1	..	1	2	..	5	12	6	18	8	9	17	47	Khulna.
2	..	..	..	2	1	..	3	..	1	9	2	11	3	4	7	48	Satkhira.
5	3	1	..	2	3	..	2	..	7	14	13	27	15	18	33	49	Rajshahi.
..	..	..	..	..	..	..	2	..	1	2	1	3	11	10	21	50	Dinajpur.
..	1	1	..	..	7	1	1	..	8	20	8	28	11	9	20	51	Jalpaiguri.
21	3	7	..	5	3	..	..	3	20	37	31	68	21	16	37	52	Darjeeling.
..	3	..	..	1	..	2	2	1	5	12	4	16	15	2	17	53	Rangpur.
5	1	..	..	2	..	..	1	..	3	7	5	12	10	5	15	54	Bogra.
..	..	1	..	1	1	..	1	..	5	7	4	11	7	4	11	55	Pabna.
1	..	..	..	..	..	1	..	..	5	9	11	20	13	8	21	56	Sirajganj.
1	..	..	..	3	1	1	..	..	4	7	7	14	9	5	14	57	English Bazar.
5	11	..	..	..	..	..	..	..	9	17	10	27	8	8	16	58	Nawabganj.
3	11	6	..	30	14	20	9	..	75	105	79	184	121	105	226	59	Dacca.
11	3	..	..	1	..	..	3	1	24	23	20	43	31	17	48	60	Narayanganj.
17	3	2	..	1	2	1	..	..	8	20	16	36	23	16	39	61	Mymensingh.
9	..	2	..	1	..	1	..	..	3	11	6	17	7	11	18	62	Netrakona.
7	4	..	..	1	..	..	3	..	2	7	13	20	21	18	39	63	Jamalpur.
5	4	..	..	2	1	..	..	..	3	11	6	17	28	16	44	64	Sherpur.
5	..	..	..	..	1	..	..	..	7	9	6	15	7	9	16	65	Kishorganj.
..	..	..	..	..	..	..	..	..	1	4	6	10	2	4	6	66	Bajitpur.
6	..	1	..	3	1	1	..	..	2	8	8	16	12	4	16	67	Tangail.
..	..	..	..	..	..	..	2	..	3	8	3	11	..	1	1	68	Faridpur.
2	2	..	..	1	1	..	..	..	2	6	3	9	2	6	8	69	Madaripur.
26	5	..	..	3	..	..	..	..	15	38	17	55	30	15	45	70	Barisal.
4	1	..	..	..	..	..	2	..	4	6	6	12	4	5	9	71	Pirojpur.
16	2	..	..	3	1	2	..	..	19	27	23	50	37	36	73	72	Chittagong.
8	2	..	..	..	..	..	..	..	4	7	7	14	5	7	12	73	Noakhali.
3	4	2	1	1	..	..	1	..	3	8	7	15	8	6	14	74	Comilla.
6	4	1	..	..	..	1	1	..	5	12	9	21	20	16	36	75	Brahmanbaria.
2	..	2	..	..	..	..	1	..	5	7	3	10	2	1	3	76	Chandpur.
545	228	204	35	306	311	429	128	15	1,489	2,472	1,881	4,353	..	..	..		
601	233	204	30	349	300	440	134	24	1,504	2,450	2,071	4,521	..	..	..		
−56	−5	equal	+5	−43	+11	−11	−6	−9	−15	+22	−190	−168	..	..	..		

District Health Officers. Taken as a whole, the statement possesses a relative value, although the figures for individual town probably only incorporated in the returns for districts as ordered in Government of Bengal, Municipal Department letter No. 118 San., dated the 8th February Education Department letter No. 98, dated the 26th March 1918.

R. B. KHAMBATA, M.R.C.S. (ENG.), L.R.C.P. (LOND.), D.P.H. (CAMB.), *Director of Public Health, Bengal.*

Vital Statistics for the month of June 1934 of the districts

Division.	No.	Districts.	Population under registration according to census of 1931.			Births registered.		Deaths							
			Male.	Female.	Total.	Number registered (excluding stillbirths).	Stillborn number registered.	Cholera.	Small-pox.	Plague.	Malaria.	Enteric fever.	Measles.	Relapsing fever.	Kala-azar.
Burdwan	1	Burdwan	763,534	724,888	1,488,422	2,875	24	16	25	..	653	10	5	2	2
	2	Birbhum	466,598	470,048	936,646	2,255	52	8	8	..	635	20	4	3	..
	3	Bankura	524,690	524,643	1,049,333	2,852	3	19	3	..	402	8	16	5	7
	4	Midnapore	1,392,796	1,361,876	2,754,672	5,040	114	267	36	..	1,078	1	3	..	1
	5	Hooghly	479,217	455,416	934,633	1,493	4	39	56	..	411	32	3	..	8
	6	Howrah ..	433,011	410,636	843,647	1,280	7	149	46	..	60	6	..	..	4
Presidency	7	24-Parganas	1,154,286	1,074,531	2,228,817	4,489	27	404	28	..	130	..	1	..	19
	8	Nadia ..	720,894	678,608	1,399,502	2,416	53	5	3	..	1,166	11	4	..	13
	9	Murshidabad.	649,857	657,007	1,306,864	2,707	86	14	7	..	1,074	34	12	10	20
	10	Jessore	864,362	795,446	1,659,808	2,541	45	6	5	..	1,275	5	..	2	14
	11	Khulna ..	833,612	762,175	1,595,787	2,198	87	67	6	..	462	25	..	..	13
Rajshahi	12	Rajshahi	726,117	675,837	1,401,954	2,300	85	15	10	..	1,499	3	12	1	6
	13	Dinajpur	912,329	823,947	1,736,276	3,716	17	4	29	..	1,487	16	4	4	121
	14	Jalpaiguri	521,824	442,571	964,395	2,079	87	3	7	..	834	11	28	4	7
	15	Darjeeling	158,030	140,420	298,450	799	47	..	..	..	209	..	..	..	12
	16	Rangpur	1,343,786	1,230,250	2,574,036	3,664	192	5	112	..	2,286	27	34	6	90
	17	Bogra ..	548,496	523,104	1,071,600	1,263	55	..	72	..	388	104	70	88	56
	18	Pabna .	709,076	682,207	1,391,283	2,336	90	15	148	..	978	3	..	2	6
	19	Malda ..	510,421	510,612	1,021,033	1,806	10	53	7	..	1,145	2	3	..	15
Dacca ..	20	Dacca ..	1,642,626	1,617,244	3,259,870	4,035	70	32	59	..	739	2	6	..	23
	21	Mymensingh	2,594,444	2,408,565	5,003,009	6,938	357	28	56	..	1,943	23	12	6	47
	22	Faridpur	1,181,717	1,138,088	2,319,805	3,525	113	54	6	..	1,384	10	7	..	34
	23	Bakarganj	1,475 688	1,416,687	2,892,375	4,267	24	630	..	..	252	20	11	6	56
Chittagong	24	Chittagong	837,839	906,043	1,743,882	3,783	161	108	..	..	314	68	9	13	38
	25	Noakhali	851,010	842,646	1,693,656	2,093	145	264	18	..	332	21	1	8	85
	26	Tippera ..	1,551,694	1,483,176	3,034,870	4,015	227	73	11	..	785	34	18	1	121
	27	Chittagong Hill Tracts.													Not
		Total of month for Bengal.	23,875,876	22,779,347	46,655,223	78,655	2,182	2,287	758	..	21,981	501	263	161	824
		Total of corresponding month of previous year.	..	..	..	91,683	2,297	1,324	1,478	..	26,405	708	371	362	860
		Increase+ or decrease−.	..	..	..	−13,028	−115	+963	−720	..	−4,424	−207	−108	−201	−45

Remarks.—1. The above table is compiled from returns collected by the Sul divisional Officers and submitted to the Director of individual district probably only approximate to the actual.
2. The vital statistics of municipalities with a population of less than 10,000 have been included in this statement with
3. Divisional totals and the birth and death ratios per mille per annum have been omitted from this statement according to

Calcutta, the 19th January 1935.

excluding towns with a population of 10,000 and over in Bengal.

registered.

Other fevers.	Dysentery.	Diarrhœa.	Influenza.	Pneumonia.	Phthisis.	Other respiratory diseases.	Injuries including suicide.	Deaths from child-birth.	Other causes.	Total of all causes.			Total of corresponding month of previous year.			No.	Districts.
										Male.	Female.	Total.	Male.	Female.	Total.		
685	37	58	10	109	35	51	62	14	369	1,088	1,055	2,143	1,272	1,177	2,449	1	Burdwan.
658	26	17	3	30	14	64	40	11	159	852	848	1,700	928	838	1,766	2	Birbhum.
545	37	94	9	93	54	50	56	14	448	987	933	1,920	859	688	1,547	3	Bankura.
1,295	121	100	10	165	57	55	117	35	683	2,153	1,940	4,093	1,771	1,606	3,377	4	Midnapore.
228	10	72	4	143	29	27	69	9	137	659	618	1,277	689	580	1,269	5	Hooghly.
128	20	63	2	51	33	42	36	3	132	429	406	835	485	430	915	6	Howrah.
1,180	38	45	..	74	49	36	124	9	481	1,388	1,230	2,618	1,458	1,265	2,723	7	24-Parganas
318	9	20	2	49	31	19	141	16	263	1,160	910	2,070	1,423	1,300	2,723	8	Nadia.
461	16	7	1	29	15	16	121	6	304	1,120	1,027	2,147	1,303	1,169	2,472	9	Murshidabad.
200	7	14	1	67	24	20	103	19	173	1,045	896	1,941	1,413	1,201	2,614	10	Jessore.
408	16	23	3	39	19	14	96	1	390	876	772	1,648	970	964	1,934	11	Khulna.
494	10	16	1	23	12	20	68	12	207	1,317	1,092	2,409	1,710	1,438	3,148	12	Rajshahi.
1,001	54	55	16	188	41	40	91	35	120	1,782	1,524	3,306	1,838	1,680	3,518	13	Dinajpur.
621	70	107	11	245	34	34	35	43	202	1,229	1,067	2,296	1,223	980	2,203	14	Jalpaiguri.
286	257	34	9	35	44	1	5	3	122	495	522	1,017	438	423	861	15	Darjeeling.
1,716	72	67	..	88	34	45	78	50	173	2,617	2,272	4,889	3,148	2,927	6,075	16	Rangpur.
134	132	86	38	55	29	21	41	54	33	708	693	1,401	911	974	1,885	17	Bogra.
596	24	19	..	50	22	18	69	9	179	1,207	936	2,143	1,491	1,346	2,837	18	Pabna.
160	5	2	1	14	5	2	45	1	118	880	698	1,578	1,149	920	2,069	19	Malda.
1,346	106	35	12	35	27	46	69	17	622	1,652	1,524	3,176	2,250	2,064	4,314	20	Dacca.
2,607	251	62	2	37	59	84	190	38	909	3,468	2,976	6,444	4,555	4,293	8,848	21	Mymensingh.
983	85	40	..	110	29	56	86	12	386	1,739	1,493	3,232	1,909	1,683	3,682	22	Faridpur.
1,829	144	26	5	203	81	104	99	10	596	2,150	1,881	4,031	1,857	1,572	3,429	23	Bakarganj.
2,116	34	34	1	65	8	12	68	22	143	1,585	1,468	3,053	1,660	1,671	3,331	24	Chittagong.
1,489	150	50	12	70	8	61	105	28	347	1,551	1,498	3,049	2,075	1,952	4,027	25	Noakhali.
1,354	306	88	3	83	43	30	96	29	710	2,049	1,736	3,785	2,367	2,033	4,400	26	Tippera.
																27	Chittagong Hill Tracts.
under registration																	
23,004	2,037	1,303	156	2,150	786	968	2,110	500	8,412	36,186	32,015	68,201	..	..	..		
27,299	1,912	1,331	297	2,137	813	1,164	2,137	584	9,225	41,242	37,174	78,416	..	..	..		
−4,295	+125	−28	−141	+13	−27	−196	−27	−84	−813	−5,056	−5,159	−10,215	..	..	..		

Public Health by the District Health Officers. Taken as a whole, the statement possesses a relative value, although the figures for those of the respective districts as ordered in Government of Bengal, Municipal Department, letter No. 118 San., dated the 8th February 1918. Government of India, Education Department, letter No. 93, dated the 26th March 1918.

R. B. KHAMBATA, M.R.C.S. (ENG.), L.R.C.P. (LOND.), D.P.H. (CAMB.), *Director of Public Health, Bengal.*

DAILY RAINFALL RECORDED IN BENGAL

Note—The total and the average rainfall for all districts have been

Division and district.	Station.	1	2	3	4	5	6	7
Presidency.								
24-Parganas ..	Saugar Island (Obsy.) ..	..	..	..	..	..	..	..
	Diamond Harbour ..	..	..	..	..	..	..	..
	Budge-Budge ..	..	..	..	..	..	..	..
	Canning Town ..	..	..	..	..	..	..	..
	Alipore (Obsy.) ..	..	..	..	..	..	..	..
	Barrackpore ..	..	..	..	..	..	..	..
	Dum-Dum ..	..	..	..	..	..	..	..
	Baraset ..	..	..	..	..	..	..	..
	Basirhat ..	..	..	..	..	..	..	..
	Gosaba ..	..	..	..	..	..	..	0·17
Nadia ..	Ranaghat ..	..	..	..	..	..	..	..
	Krishnagar (Obsy.) ..	..	..	..	..	..	..	..
	Chuadanga ..	..	..	..	..	..	..	..
	Meherpore ..	..	..	..	..	..	0·17	0·13
	Kushtia ..	..	..	..	..	..	..	0·14
	Haringhata ..	..	..	..	..	..	..	..
Murshidabad ..	Kandi ..	..	..	..	..	..	..	0·76
	Berhampore (Obsy.) ..	..	..	..	..	..	..	0·49
	Lalbagh ..	..	..	..	..	..	..	2·50
	Azimgunj ..	..	..	..	..	..	..	1·90
	Jangipur ..	..	..	..	..	..	..	0·81
	Lalgola ..	..	..	..	..	..	..	2·30
	Akriganj ..	..	..	..	..	..	..	2·75
	Patkabari ..	..	..	..	..	..	1·16	0·41
	Dumkal ..	..	..	..	..	..	..	..
	Kallyangunj (Ishanpur) ..	..	..	..	..	..	..	1·61
	Khargram* ..	..						
	Bharatpore ..	..	..	..	..	..	..	0·25
Jessore ..	Narail ..	..	..	..	..	..	..	0·20
	Jessore (Obsy.) ..	..	..	..	..	..	..	..
	Jhenida ..	..	..	..	..	..	0·06	0·23
	Magura ..	..	..	..	..	..	..	0·95
	Bongaon ..	..	..	..	..	..	..	..
Khulna ..	Satkhira (Obsy.) ..	..	..	..	..	..	..	..
	Bagerhat ..	..	..	..	..	..	..	..
	Khulna (Obsy.) ..	..	..	..	..	..	..	..
	Kaliganj ..	..	..	..	..	..	..	0·38
	Nakipur ..	..	..	..	..	..	..	..
	Dumuria ..	..	..	..	..	..	..	..
	Rampal ..	..	..	..	..	..	..	..
	Kalaroa ..	..	..	..	..	..	..	0·19
	Paikgachha (Raruli) ..	..	..	..	..	..	..	..
	Mullahat ..	..	..	..	..	..	..	..
	Morelganj* ..	..						
	Islamkati ..	..	..	..	..	..	..	..
Burdwan.								
Burdwan ..	Kalna ..	..	..	..	..	..	..	..
	Burdwan (Obsy.) ..	..	..	..	..	..	..	0·05
	Katwa ..	..	..	..	..	..	..	0·15
	Asansol (Obsy.) ..	..	..	..	..	..	..	0·07
	Mankar ..	..	..	..	..	..	..	1·21
	Mangalkot* ..	..						
	Royna ..	..	..	..	..	..	..	..
	Monteswar* ..	..						
Birbhum ..	Suri ..	..	..	..	..	..	..	0·06
	Hetampur ..	..	..	..	..	..	..	0·42
	Rampurhat ..	..	..	..	..	..	..	1·25
	Bolpur ..	..	..	..	..	..	..	..
	Murarai* ..	..						
	Labpur ..	..	..	..	..	..	..	..
	Nalhati ..	..	..	..	..	..	..	1·00
	Mayureswar ..	..	..	..	..	..	..	0·06

*Not reported.

FOR THE MONTH OF DECEMBER 1934.

calculated using the data of only those stations for which normals are available.

8	9	10	11	12	13	14	15	16	17	18	19	20
0·73	..	0·35	..	..	..	..	..	..	..	..	..	..
0·13	..	..	..	..	..	..	..	..	..	..	..	..
0·47	..	0·06	..	..	..	..	..	..	..	..	..	..
0·50	..	..	..	..	..	..	..	..	..	..	..	..
0·19	..	0·12	..	..	..	..	..	..	..	..	..	..
0·25	..	..	..	..	..	..	..	..	..	..	..	..
..	..	..	..	..	..	..	..	..	..	..	..	..
..	..	0·10	..	..	..	..	..	..	..	..	..	..
0·22	..	..	..	..	..	..	..	..	..	..	..	..
..	..	..	..	..	..	..	..	..	..	..	..	..
0·50	0·30	..	..	..	..	..	..	..	..	..	..	..
0·27	..	0·01	..	..	..	..	..	..	..	..	..	..
0·35	0·03	0·05	..	..	..	..	..	..	..	..	..	..
0·15	0·02	..	..	..	..	..	..	..	..	..	..	..
0·24	..	0·12	..	..	..	..	..	..	..	..	..	..
0·20	..	..	..	..	..	..	..	..	..	..	..	..
1·04	0·50	0·03	..	..	..	..	..	..	..	..	..	..
0·87	0·47	0·60	..	..	..	..	..	..	..	..	..	..
0·22	0·06	..	..	..	..	..	..	..	..	..	..	..
..	0·42	0·32	..	..	..	..	..	..	..	..	..	..
0·27	..	..	..	..	..	..	..	..	..	..	..	..
0·08	0·36	..	..	..	..	..	..	..	..	..	..	..
0·60	0·80	..	..	..	..	..	..	..	..	..	..	..
0·15	..	..	..	..	..	..	..	..	..	..	..	..
0·87	0·22	..	..	..	..	..	..	..	..	..	..	..
0·53	0·30	0·60	..	..	..	..	..	..	..	..	..	..
0·15	..	0·51	..	..	..	..	..	..	..	..	..	..
..	0·90	..	..	..	..	..	..	..	..	..	..	..
0·18	..	0·51	..	..	..	..	..	..	..	..	..	..
..	..	..	..	..	..	..	..	..	..	..	..	..
..	..	..	..	..	..	..	..	..	..	..	..	..
0·03	..	0·14	..	..	..	..	..	..	..	..	..	..
0·13	..	0·23	..	..	..	..	..	..	..	..	..	..
1·00	..	..	..	..	..	..	..	..	..	..	..	..
..	..	0·64	..	..	..	..	..	..	..	..	..	..
0·02	0·60	..	..	..	..	..	..	..	..	..	..	..
0·10	..	0·93	..	..	..	..	..	..	..	..	..	..
..	..	0·59	..	..	..	..	..	..	..	..	..	..
..	..	..	..	..	..	..	..	..	..	..	..	..
0·05	..	..	..	..	..	..	..	..	..	..	..	..
..	..	..	..	..	..	..	..	..	..	..	..	..
..	..	3·33	..	..	..	..	..	..	..	..	..	..
..	..	..	..	..	..	..	..	..	..	..	..	..
0·74	..	0·54	..	..	..	..	..	..	..	..	..	..
2·74	..	..	..	..	..	..	..	..	..	..	..	..
0·32	0·10	..	..	..	..	..	..	..	..	..	..	..
..	..	..	..	..	..	..	..	..	..	..	..	..
0·11	0·25	..	..	..	..	..	..	..	..	..	..	..
2·08	..	..	..	..	..	..	..	..	..	..	..	..
..	..	0·02	..	..	..	..	..	..	..	..	..	..
..	..	..	..	..	..	..	..	..	..	..	..	..
0·25	0·75	..	..	..	..	..	..	..	..	..	..	..
0·24	..	0·92	..	..	..	..	..	..	..	..	..	..
..	0·30	0·40	..	..	..	..	..	..	..	..	..	..
0·22	0·03	..	..	..	..	..	..	..	..	..	..	..
0·06	..	..	..	..	..	..	..	..	..	..	..	..

DAILY RAINFALL RECORDED IN BENGAL

Division and district.	Station.	21	22	23	24	25	26	27
Presidency.								
24-Parganas ..	Saugar Island (Obsy.) ..	..	..	..	..	..	..	..
	Diamond Harbour ..	..	..	..	..	..	..	..
	Budge-Budge	..	..	..	..	..	..	..
	Canning Town	..	..	..	..	..	..	..
	Alipore (Obsy.)	..	..	..	..	..	..	..
	Barrackpore	..	..	..	..	..	..	..
	Dum-Dum	..	..	..	..	..	..	..
	Baraset	..	..	..	..	..	..	..
	Basirhat	..	..	..	..	..	..	..
	Gosaba	..	..	..	..	..	..	..
Nadia ..	Ranaghat	..	..	..	..	..	..	..
	Krishnagar (Obsy.) ..	..	..	..	..	..	..	..
	Chuadanga	..	..	..	..	..	..	..
	Meherpore	..	..	..	..	..	..	..
	Kushtia	..	..	..	..	..	..	..
	Haringhata	..	..	..	..	..	..	..
Murshidabad ..	Kandi	..	..	..	..	..	..	..
	Berhampore (Obsy.) ..	..	..	..	..	..	..	..
	Lalbagh	..	..	..	..	..	..	..
	Azimgunj	..	..	..	..	..	..	..
	Jangipur	..	..	..	..	..	..	..
	Lalgola	..	..	..	..	..	..	..
	Akriganj	..	..	..	..	..	..	..
	Patkabari	..	..	..	..	..	..	..
	Dumkal	..	..	..	..	..	..	..
	Kallyangunj (Ishanpur) ..	..	..	..	..	..	..	..
	Khargram*							
	Bharatpore	..	..	..	..	..	..	..
Jessore ..	Narail	..	..	..	..	..	..	..
	Jessore (Obsy.)	..	..	..	..	..	..	..
	Jhenida	..	..	..	..	..	..	..
	Magura	..	..	..	..	..	..	..
	Bongaon	..	..	..	..	..	..	..
Khulna ..	Satkhira (Obsy.)	..	..	..	..	..	..	..
	Bagerhat	..	..	..	..	..	..	..
	Khulna (Obsy.)	..	..	..	..	..	..	..
	Kaliganj	..	..	..	..	..	..	..
	Nakipur	..	..	..	..	..	..	..
	Dumuria	..	..	..	..	..	..	..
	Rampal	..	..	..	..	..	..	..
	Kalaroa	..	..	..	..	..	..	..
	Paikgachha (Raruli) ..	..	..	..	..	..	..	..
	Mullahat	..	..	..	..	..	..	..
	Morelganj*							
	Islamkati	..	..	..	..	..	..	..
Burdwan.								
Burdwan ..	Kalna	..	..	..	..	..	..	..
	Burdwan (Obsy.)	..	..	..	..	..	..	..
	Katwa	..	..	..	..	..	..	..
	Asansol (Obsy.)	..	..	..	..	..	..	..
	Mankar	..	..	..	..	..	..	..
	Mangalkot*							
	Royna	..	..	..	..	..	..	..
	Monteswar*							
Birbhum ..	Suri	..	..	..	..	..	..	..
	Hetampur	..	..	..	..	..	..	..
	Rampurhat	..	..	..	..	..	..	..
	Bolpur	..	..	..	..	..	..	..
	Murarai*							
	Labpur	..	..	..	..	..	..	..
	Nalhati	..	..	..	..	..	..	..
	Mayureswar	..	..	..	..	..	..	..

*Not reported.

FOR THE MONTH OF DECEMBER 1934.

28	29	30	31	Number of rainy days.	Average number of rainy days.	Total rainfall for the month.	Normal rainfall for the month.	Heaviest rainfall during the month.	Total rainfall from 1st to 31st December 1934.	Normal rainfall from 1st to 31st December 1934.
..	..	..	..	2	0·5	1·08	0·27	0·73	1·08	0·27
..	..	..	..	1	0·3	0·13	0·18	0·13	0·13	0·18
..	..	..	..	1	0·4	0·53	0·21	0·47	0·53	0·21
..	..	..	..	1	0·2	0·50	0·08	0·50	0·50	0·08
..	..	..	..	2	0·4	0·31	0·20	0·19	0·31	0·20
..	..	..	..	1	0·4	0·25	0·31	0·25	0·25	0·31
..	..	..	..	Nil	0·4	Nil	0·18	Nil	Nil	0·18
..	..	..	..	1	0·3	0·10	0·19	0·10	0·10	0·19
..	..	..	..	1	0·3	0·22	0·24	0·22	0·22	0·24
..	..	..	..	1	(*n*)	0·17	(*n*)	0·17	0·17	(*n*)
..	..	..	..	2	0·3	0·80	0·16	0·50	0·80	0·16
..	..	..	..	1	0·2	0·28	0·09	0·27	0·28	0·09
..	..	..	..	1	0·3	0·43	0·13	0·35	0·43	0·13
..	..	..	..	3	0·3	0·47	0·14	0·17	0·47	0·14
..	..	..	..	3	0·2	0·50	0·13	0·24	0·50	0·13
..	..	..	..	1	0·3	0·20	0·16	0·20	0·20	0·16
..	..	..	..	3	0·2	2·33	0·12	1·04	2·33	0·12
..	..	..	..	4	0·3	2·43	0·12	0·87	2·43	0·12
..	..	..	..	2	0·2	2·78	0·10	2·50	2·78	0·10
..	..	..	..	3	0·2	2·64	0·09	1·90	2·64	0·09
..	..	..	..	2	0·2	1·08	0·09	0·81	1·08	0·09
..	..	..	..	2	0·2	2·74	0·09	2·30	2·74	0·09
..	..	..	..	3	0·1	4·15	0·06	2·75	4·15	0·06
..	..	..	..	3	0·1	1·72	0·07	1·16	1·72	0·07
..	..	..	..	2	0·2	1·09	0·14	0·87	1·09	0·14
..	..	..	..	4	0·3	3·04	0·13	1·61	3·04	0·13
..	..	..	..	3	(*n*) (*n*)	0·91	(*n*) (*n*)	0·51	0·91	(*n*) (*n*)
..	..	..	..	2	0·3	1·10	0·17	0·90	1·10	0·17
..	..	..	..	2	0·5	0·69	0·20	0·51	0·69	0·20
..	..	..	..	1	0·2	0·29	0·14	0·23	0·29	0·14
..	..	..	..	1	0·3	0·95	0·14	0·95	0·95	0·14
..	..	..	..	1	0·3	0·17	0·24	0·14	0·17	0·24
..	..	..	..	2	0·3	0·36	0·27	0·23	0·36	0·27
..	..	..	..	1	0·4	1·00	0·16	1·00	1·00	0·16
..	..	..	..	1	0·3	0·64	0·43	0·64	0·64	0·43
..	..	..	..	2	0·2	1·00	0·11	0·60	1·00	0·11
..	..	..	..	2	0·3	1·03	0·09	0·93	1·03	0·09
..	..	..	..	1	0·3	0·59	0·12	0·59	0·59	0·12
..	..	.	..	Nil	0·3	Nil	0·13	Nil	Nil	0·13
..	..	..	..	1	0·4	0·24	0·14	0·19	0·24	0·14
..	..	..	..	Nil	0·4	Nil	0·14	Nil	Nil	0·14
..	..	..	..	1	0·5 0·3	3·33	0·19 0·16	3·33	3·33	0·19 0·16
..	..	..	..	Nil	0·4	Nil	0·14	Nil	Nil	0·14
..	..	..	..	2	0·3	1·28	0·15	0·74	1·28	0·15
..	..	..	..	1	0·3	2·79	0·15	2·74	2·79	0·15
..	..	..	..	3	0·2	0·57	0·12	0·32	0·57	0·12
..	..	..	..	Nil	0·4	0·07	0·24	0·07	0·07	0·24
..	..	..	..	3	0·2 0·1	1·57	0·12 0·01	1·21	1·57	0·12 0·01
..	..	..	..	1	0·2 0·0	2·08	0·16 0·00	2 08	2·08	0·16 0·00
..	..	..	..	Nil	0·2	0·08	0·07	0·06	0·08	0·07
..	..	..	..	1	0·3	0·42	0·08	0·42	0·42	0·08
..	..	..	..	3	0·3	2·25	0·10	1·25	2·25	0·10
..	..	..	..	2	0·2 0·1	1·16	0·05 0·05	0·92	1·16	0·05 0·05
..	..	..	..	2	0·2	0·70	0·04	0·40	0·70	0·04
..	..	..	..	2	(*n*)	1·25	(*n*)	1·00	1·25	(*n*)
..	..	..	..	Nil	(*n*)	0·11	(*n*)	0·06	0·11	(*n*)

(*n*) Not ascertained.

DAILY RAINFALL RECORDED IN BENGAL

Division and district.	Station.	1	2	3	4	5	6	7
Burdwan - *concld.*								
Bankura ..	Bankura (Obsy.)	..	..	..	..	..	..	..
	Vishnupur	..	..	..	..	..	..	0·50
	Maliara	..	..	..	..	..	..	0·32
	Khatra	..	..	..	..	..	..	..
	Indas	..	..	..	..	..	..	..
	Kotalpur	..	..	..	..	..	..	..
	Onda	..	..	..	..	..	..	..
	Gangajalghati	..	..	..	..	..	..	..
	Raipur	..	..	..	..	..	..	..
	Sonamukhi	..	..	..	..	..	..	..
	Taldangra	..	..	..	..	..	..	..
	Saranga	..	..	..	..	..	..	..
	Indpur	..	..	..	..	..	..	..
	Arhara	..	..	..	..	..	..	..
	Barjora	..	..	..	..	..	..	..
	Simlapal	..	..	..	..	..	..	..
	Mejia	..	..	..	..	..	..	..
	Siromanipur	..	..	..	..	..	..	..
	Palasdanga*							
	Chatna	..	..	..	..	..	..	..
	Ranibandh	..	..	..	..	..	..	..
	Saltora	..	..	..	..	..	..	..
	Joypur*							
	Ambikanagar*							
	Joyrampur*							
Midnapore ..	Contai	..	..	..	..	..	..	..
	Tamluk	..	..	..	..	..	..	..
	Midnapore (Obsy.) ..	..	..	..	..	..	..	..
	Ghatal	..	..	..	..	..	..	0·01
	Kukrahati	..	..	..	..	..	..	..
	Amlagura	..	..	..	..	..	..	..
	Panskura	..	..	..	..	..	..	..
	Dantan	..	..	..	..	..	..	..
	Chandrakona	..	..	..	..	..	..	..
	Pachet	..	..	..	..	..	..	..
	Bhagwanpur	..	..	..	..	..	0·40	0·11
	Kashiary	..	..	..	..	..	..	..
	Nayabasan	..	..	..	..	..	..	..
	Silda (Belpabari) ..	..	..	..	..	..	..	0·02
	Goaltore	..	..	..	..	..	..	..
	Salboni	..	..	..	..	..	..	..
	Narayangarh	..	..	..	..	..	0·92	0·12
	Ramnagar	..	..	..	..	..	..	0·02
	Mohanpur	..	..	..	..	..	..	..
	Jenka (Khajri)	..	..	..	..	..	..	..
	Nandigram	..	..	..	..	..	..	..
	Moyna	..	..	..	..	..	..	..
	Pingla*							
	Narajole*							
	Kolaghat (Dainan) ..	..	..	..	..	..	..	..
	Balichak	..	..	..	..	..	..	..
	Jhargram	..	..	..	..	..	..	0·05
	Kharagpur	..	..	..	..	..	..	..
Hooghly ..	Serampore	..	..	..	..	..	..	0·05
	Hooghly	..	..	..	..	..	..	..
	Arambagh	..	..	..	..	..	..	..
	Chanditala*							
	Tentulia	..	..	..	..	..	..	..
	Boinchee*							
	Khanakul	..	..	..	..	..	..	..
	Tarakeswar*							
Howrah ..	Howrah	..	..	..	..	..	..	..
	Uluberia	..	..	..	..	..	..	..
	Amta	..	..	..	..	..	..	..
Rajshahi.								
Rajshahi ..	Boalia (Obsy.)	..	..	..	..	..	..	1·30
	Nator	..	..	..	..	..	..	0·07
	Naogaon	..	..	..	..	..	..	..
	Lalpur	..	..	..	..	..	..	0·50
	Manda	..	..	..	..	..	..	..
	Mahadebpur	..	..	..	..	..	..	..
	Tanor	..	..	..	..	..	..	..
	Chaugram*							
	Joari	..	..	..	..	..	0·11	0·12
	Badalgachi	..	..	..	..	..	..	..

*Not reported.

FOR THE MONTH OF DECEMBER 1934.

8	9	10	11	12	13	14	15	16	17	18	19	20
0·12	..	..	..	..	..	..	..	..	..	..	..	..
..	..	..	..	..	..	..	..	..	..	..	..	..
1·60	..	..	..	..	..	..	..	..	..	..	..	..
0·30	..	..	..	..	..	..	..	..	..	..	..	..
0·95	..	..	..	..	..	..	..	..	..	..	..	..
0·73	..	0·20	..	..	..	..	..	..	..	..	..	..
0·40	..	..	..	..	..	..	..	..	..	..	..	..
0·54	..	..	..	..	..	..	..	..	..	..	..	..
0·10	..	..	..	..	..	..	..	..	..	..	..	..
..	..	..	..	..	..	..	..	..	..	..	..	..
..	..	..	..	..	..	..	..	..	..	..	..	..
0·01	..	..	..	..	..	..	..	..	..	..	..	..
0·40	..	..	..	..	..	..	..	..	..	..	..	..
0·24	..	..	..	..	..	..	..	..	..	..	..	..
0·60	..	1·04	..	..	..	..	..	..	..	..	..	..
..	..	..	..	..	..	..	..	..	..	..	..	..
..	..	..	..	..	..	..	..	..	..	..	..	..
0·12	0·04	..	..	..	..	..	..	..	..	..	..	..
..	..	..	..	..	..	..	..	..	..	..	..	..
0·02	..	..	..	..	..	..	..	..	..	..	..	..
..	..	..	..	..	..	..	..	..	..	..	..	..
0·02	..	0·11	..	..	..	..	..	..	..	..	..	..
..	..	..	..	..	..	..	..	..	..	..	..	..
0·10	..	..	..	..	..	..	..	..	..	..	..	..
0·02	..	..	..	..	..	..	..	..	..	..	..	..
..	..	..	..	..	..	..	..	..	..	..	..	..
0·04	..	..	..	..	..	..	..	..	..	..	..	..
0·20	..	..	..	..	..	..	..	..	..	..	..	..
0·27	0·45	..	..	..	..	..	..	..	..	..	..	..
..	..	..	..	..	..	..	..	..	..	..	..	..
..	..	..	..	..	..	..	..	..	..	..	..	..
..	..	..	..	..	..	..	..	..	..	..	..	..
1·60	0·03	..	..	..	..	..	..	..	..	..	..	..
1·45	..	..	..	..	..	..	..	..	..	..	..	..
0·02	..	..	..	..	..	..	..	..	..	..	..	..
0·33	0·07	..	..	..	..	..	..	..	..	..	..	..
..	..	..	..	..	..	..	..	..	..	..	..	..
..	..	..	..	..	..	..	..	..	..	..	..	..
..	0·20	..	..	..	..	..	..	..	..	..	..	..
0·21	..	..	..	..	..	..	..	..	..	..	..	..
0·40	..	..	..	..	..	..	..	..	..	..	..	..
..	..	..	..	..	..	..	..	..	..	..	..	..
..	..	..	..	..	..	..	..	..	..	..	..	..
..	0·26	0·06	..	..	..	..	..	..	..	..	..	..
0·52	..	..	..	..	..	..	..	..	..	..	..	..
..	..	..	..	..	..	..	..	..	..	..	..	..
0·58	..	..	..	..	..	..	..	..	..	..	..	..
..	0·01	..	..	..	..	..	..	..	..	..	..	..
1·50	..	..	..	..	..	..	..	..	..	..	..	..
1·04	..	..	..	..	..	..	..	..	..	..	..	..
..	..	..	..	..	..	..	..	..	..	..	..	..
..	..	..	..	..	..	..	..	..	..	..	..	..
..	0·02	..	..	..	..	..	..	..	..	..	..	..
0·38	..	..	..	..	..	..	..	..	..	..	..	..
..	..	..	..	..	..	..	..	..	..	..	..	..
0·47	0·26	..	..	..	..	..	..	..	..	..	..	..
0·70	..	..	..	..	..	..	..	..	..	..	..	..
..	..	..	..	..	..	..	..	..	..	..	..	..
0·12	0·08	..	..	..	..	..	..	..	..	..	..	..
..	..	..	..	..	..	..	..	..	..	..	..	..
..	..	..	..	..	..	..	..	..	..	..	..	..
..	..	..	..	..	..	..	..	..	..	..	..	..
0·43	..	..	..	..	..	..	..	..	..	..	..	..
..	0·20	..	..	..	..	..	..	..	..	..	..	..

DAILY RAINFALL RECORDED IN BENGAL

Division and district.	Station.	21	22	23	24	25	26	27
Burdwan—*concld.*								
Bankura ..	Bankura (Obsy.)	..	..	..	..	..	..	..
	Vishnupur	..	..	..	..	..	..	..
	Maliara	..	..	..	..	..	..	..
	Khatra	..	..	..	..	..	..	..
	Indas	..	..	..	..	..	..	..
	Kotalpur	..	..	..	..	..	..	..
	Onda	..	..	..	..	..	..	..
	Gangajalghati	..	..	..	..	..	..	..
	Raipur	..	..	..	..	..	..	..
	Sonamukhi	..	..	..	..	..	..	..
	Taldangra	..	..	..	..	..	..	..
	Saranga	..	..	..	..	..	..	..
	Indpur	..	..	..	..	..	..	..
	Arhara	..	..	..	..	..	..	..
	Barjora	..	..	..	..	..	..	..
	Simlapal	..	..	..	..	..	..	..
	Mejia	..	..	..	..	..	..	..
	Siromanipur	..	..	..	..	..	..	..
	Palasdanga*							
	Chatna	..	..	..	..	..	..	..
	Ranibandh	..	..	..	..	..	..	..
	Saltora	..	..	..	..	..	..	..
	Joypur*							
	Ambikanagar*							
	Joyrampur*							
Midnapore ..	Contai	..	..	..	..	..	..	..
	Tamluk	..	..	..	..	..	..	..
	Midnapore (Obsy.) ..	..	..	..	..	..	..	..
	Ghatal	..	..	..	..	..	..	..
	Kukrahati	..	..	..	..	..	..	..
	Amlagura	..	..	..	..	..	..	..
	Panskura	..	..	..	..	..	..	..
	Dantan	..	..	..	..	..	..	..
	Chandrakona	..	..	..	..	..	..	..
	Pachet							
	Bhagwanpur	..	..	..	..	..	..	..
	Kashiary	..	..	..	..	..	..	..
	Nayabasan	..	..	..	..	..	..	..
	Silda (Belpabari) ..	..	..	..	..	..	..	..
	Goaltore	..	..	..	..	..	..	..
	Salboni	..	..	..	..	..	..	..
	Narayangarh							
	Ramnagar	..	..	..	..	..	..	..
	Mohanpur	..	..	..	..	..	..	..
	Jenka (Khajri)	..	..	..	..	..	..	..
	Nandigram	..	..	..	..	..	..	..
	Moyna	..	..	..	..	..	..	..
	Pingla*							
	Narajole*							
	Kolaghat (Dainan) ..	..	..	..	..	..	..	..
	Balichak	..	..	..	..	..	..	..
	Jhargram	..	..	..	..	..	..	..
	Kharagpur	..	..	..	..	..	..	..
Hooghly ..	Serampore	..	..	..	..	..	..	..
	Hooghly	..	..	..	..	..	..	..
	Arambagh	..	..	..	..	..	..	..
	Chanditala*							
	Tentulia	..	..	..	..	..	..	..
	Boinchee*							
	Khanakul	..	..	..	..	..	..	..
	Tarakeswar*							
Howrah ..	Howrah	..	..	..	..	..	..	..
	Uluberia	..	..	..	..	..	..	..
	Amta	..	..	..	..	..	..	..
Rajshahi.								
Rajshahi ..	Boalia (Obsy.)	..	..	..	..	..	..	..
	Nator	..	..	..	..	..	..	..
	Naogaon	..	..	..	..	..	..	..
	Lalpur	..	..	..	..	..	..	..
	Manda	..	..	..	..	..	..	..
	Mahadebpur	..	..	..	..	..	..	..
	Tanor	..	..	..	..	..	..	..
	Chaugram*							
	Joari	..	..	..	..	..	..	..
	Badalgachi	..	..	..	..	..	..	..

*Not reported.

FOR THE MONTH OF DECEMBER 1934.

28	29	30	31	Number of rainy days.	Average number of rainy days.	Total rainfall for the month.	Normal rainfall for the month.	Heaviest rainfall during month.	Total rainfall from 1st to 31st December 1934.	Normal rainfall from 1st to 31st December 1934.
..	..	..	..	1	0·2	0·12	0·08	0·12	0·12	0·08
..	..	..	..	1	0·3	0·50	0·13	0·50	0·50	0·13
..	..	..	..	2	0·2	1·92	0·11	1·60	1·92	0·11
..	..	..	..	1	0·2	0·30	0·17	0·30	0·30	0·17
..	..	..	..	1	0·2	0·95	0·10	0·95	0·95	0·10
..	..	..	..	2	0·1	0·93	0·10	0·73	0·93	0·10
..	..	..	..	1	0·2	0·40	0·08	0·40	0·40	0·08
..	..	..	..	1	0·2	0·54	0·08	0·54	0·54	0·08
..	0·01	..	..	1	0·2	0·11	0·15	0·10	0·11	0·15
..	..	..	..	Nil	0·2	Nil	0·10	Nil	Nil	0·10
..	..	..	..	Nil	0·0	Nil	0·00	Nil	Nil	0·00
..	..	..	..	Nil	0·0	0·01	0·00	0·01	0·01	0·00
..	..	..	..	1	0·0	0·40	0·00	0·40	0·40	0·00
..	..	..	..	1	(*n*)	0·24	(*n*)	0·24	0·24	(*n*)
..	..	..	..	2	(*n*)	1·64	(*n*)	1·04	1·64	(*n*)
..	..	..	..	Nil	(*n*)	Nil	(*n*)	Nil	Nil	(*n*)
..	..	..	..	Nil	(*n*)	Nil	(*n*)	Nil	Nil	(*n*)
..	..	..	..	1	(*n*)	0·16	(*n*)	0·12	0·16	(*n*)
					(*n*)		(*n*)			(*n*)
..	..	..	..	Nil	(*n*)	Nil	(*n*)	Nil	Nil	(*n*)
..	..	..	..	Nil	(*n*)	0·02	(*n*)	0·02	0·02	(*n*)
..	..	..	..	Nil	(*n*)	Nil	(*n*)	Nil	Nil	(*n*)
					(*n*)		(*n*)			(*n*)
					(*n*)		(*n*)			(*n*)
					(*n*)		(*n*)			(*n*)
..	..	..	..	1	0·4	0·13	0·23	0·11	0·13	0·23
..	..	..	..	Nil	0·3	Nil	0·18	Nil	Nil	0·18
..	..	..	..	1	0·3	0·10	0·25	0·10	0·10	0·25
..	..	..	..	Nil	0·3	0·03	0·19	0·02	0·03	0·19
..	..	..	..	Nil	0·2	Nil	0·08	Nil	Nil	0·08
..	..	..	..	Nil	0·3	0·04	0·16	0·04	0·04	0·16
..	..	..	..	1	0·3	0·20	0·16	0·20	0·20	0·16
..	..	..	..	2	0·2	0·72	0·13	0·45	0·72	0·13
..	..	..	..	Nil	0·4	Nil	0·34	Nil	Nil	0·34
..	..	..	..	Nil	0·2	Nil	0·05	Nil	Nil	0·05
..	..	..	..	2	0·3	0·51	0·14	0·40	0·51	0·14
..	..	..	..	1	0·2	1·63	0·05	1·60	1·63	0·05
..	..	..	..	1	0·1	1·45	0·33	1·45	1·45	0·33
0·07	..	..	..	Nil	0·1	0·11	0·10	0·07	0·11	0·10
..	..	..	..	1	0·3	0·40	0·18	0·33	0·40	0·18
..	..	..	..	Nil	0·3	Nil	0·21	Nil	Nil	0·21
..	..	..	..	2	0·3	1·04	0·23	0·92	1·04	0·23
..	..	..	..	1	0·1	0·22	0·03	0·20	0·22	0·03
..	..	..	..	1	0·1	0·21	0·01	0·21	0·21	0·01
..	..	..	..	1	0·1	0·40	0·06	0·40	0·40	0·06
..	..	..	..	Nil	0·3	Nil	0·03	Nil	Nil	0·03
..	..	..	..	Nil	0·1	Nil	0·02	Nil	Nil	0·02
					0·0		0·01			0·01
					0·1		0·15			0·15
..	..	..	..	1	(*n*)	0·32	(*n*)	0·26	0·32	(*n*)
..	..	..	..	1	(*n*)	0·52	(*n*)	0·52	0·52	(*n*)
..	..	..	..	Nil	(*n*)	0·05	(*n*)	0·05	0·05	(*n*)
..	..	..	..	1	(*n*)	0·58	(*n*)	0·58	0·58	(*n*)
..	..	..	..	Nil	0·4	0·06	0·20	0·05	0·06	0·20
..	..	..	..	1	0·4	1·50	0·27	1·50	1·50	0·27
..	..	..	..	1	0·3	1·04	0·15	1·04	1·04	0·15
					(*n*)		(*n*)			(*n*)
..	..	..	..	Nil	(*n*)	Nil	(*n*)	Nil	Nil	(*n*)
					(*n*)		(*n*)			(*n*)
..	..	..	..	Nil	(*n*)	Nil	(*n*)	Nil	Nil	(*n*)
					(*n*)		(*n*)			(*n*)
..	..	..	..	Nil	0·4	0·02	0·19	0·02	0·02	0·19
..	..	..	..	1	0·3	0·38	0·15	0·38	0·38	0·15
..	..	..	..	Nil	0·3	Nil	0·24	Nil	Nil	0·24
..	..	..	..	3	0·1	2·03	0·06	1·30	2·03	0·06
..	..	..	..	1	0·2	0·77	0·08	0·70	0·77	0·08
..	..	..	..	Nil	0·2	Nil	0·09	Nil	Nil	0·09
..	..	..	..	2	0·3	0·70	0·10	0·50	0·70	0·10
..	..	..	..	Nil	0·1	Nil	0·02	Nil	Nil	0·02
..	..	..	..	Nil	0·2	Nil	0·09	Nil	Nil	0·09
..	..	..	..	Nil	0·2	Nil	0·08	Nil	Nil	0·08
					(*n*)		(*n*)			(*n*)
..	..	..	..	3	(*n*)	0·66	(*n*)	0·43	0·66	(*n*)
..	..	..	..	1	(*n*)	0·20	(*n*)	0·20	0·20	(*n*)

(*n*) Not ascertained.

DAILY RAINFALL RECORDED IN BENGAL

Division and district.	Station.	1	2	3	4	5	6	7
Rajshahi —*concld.*								
Dinajpur ..	Nithpur	..	..	..	..	..	..	..
	Nawabganj	..	..	..	..	..	..	..
	Gangarampur	..	..	..	..	..	..	..
	Itahar	..	..	..	..	..	..	..
	Raiganj	..	..	..	..	..	..	..
	Dinajpur (Obsy.)	..	..	..	..	..	..	..
	Balurghat	..	..	..	..	..	..	..
	Thakurgaon	..	..	..	..	..	..	..
	Setabganj	..	..	..	..	..	..	..
	Ramganj	..	..	..	..	..	..	..
	Atwari*							
	Birganj	..	..	..	..	..	..	..
	Parbatipur	..	..	..	..	..	..	..
	Patnitola	..	..	..	..	..	..	..
	Sapahar*							
Jalpaiguri ..	Jalpaiguri (Obsy.)	..	..	..	..	..	..	..
	Alipur Duars	0·02	..	..	..	..	..	..
	Falakata	..	..	..	..	..	..	..
	Debiganj	..	..	..	..	..	..	..
	Buxa	..	..	..	..	..	..	..
	Kalchini	..	..	..	..	..	..	..
	Kumargram	..	..	..	..	..	..	..
Darjeeling ..	Siliguri	..	..	..	..	..	..	..
	Darjeeling (Obsy.) ..	..	..	..	..	..	..	..
	Kalimpong (Obsy.) ..	..	..	..	..	..	..	..
	Mongpoo	..	..	..	..	..	..	..
	Kurseong	..	..	..	..	..	..	..
	Pedong	..	..	..	..	..	..	..
Rangpur ..	Bhawaniganj (Gaibandha) ..	..	..	..	..	..	..	..
	Rangpur (Obsy.)	..	..	..	..	..	..	..
	Pirganj	..	..	..	..	..	..	..
	Kurigaon	..	..	..	..	..	..	..
	Gobindganj*							
	Bagdogra (Nilphamari) ..	..	..	..	..	..	..	..
	Ulipur	..	..	..	..	..	..	..
	Sunderganj	..	..	..	..	..	..	..
	Saidpur	..	..	..	..	..	..	..
Bogra ..	Sherpur	..	..	..	..	..	..	..
	Nowkhilla	..	..	..	..	..	..	..
	Bogra (Obsy.)	..	..	..	..	..	..	..
	Panchbibi	..	..	..	..	..	..	..
	Khetlal	..	..	..	..	..	..	..
	Adamdighi	..	..	..	..	..	..	..
	Dubchanchia	..	..	..	..	..	..	..
Pabna ..	Shazadpur	..	..	..	..	..	0·48	0·15
	Pabna	..	..	..	..	..	..	0·05
	Sirajganj (Obsy.)	..	..	..	..	..	..	..
	Iswardi	..	..	..	..	..	..	0·41
Malda ..	Malda (Obsy.)	..	..	..	..	..	..	..
	Chanchal	..	..	..	..	..	..	..
	Gazol	..	..	..	..	..	..	..
	Sibganj	..	..	..	..	..	..	..
	Gomastapur	..	..	..	..	..	..	..
	Nawabganj	..	..	..	..	..	..	0·19
Dacca.								
Dacca ..	Munshiganj	..	..	..	..	..	..	..
	Dacca	..	..	..	..	..	..	..
	Nawabganj	..	..	..	..	..	..	..
	Narayanganj (Obsy.) ..	..	..	..	..	..	..	..
	Narsingdi	..	..	..	..	..	..	..
	Manickganj	..	..	..	..	..	..	0·27
	Joydebpur	..	..	..	..	..	..	0·08
	Kapasia	..	..	..	..	..	..	..

*Not reported.

FOR THE MONTH OF DECEMBER 1934.

8	9	10	11	12	13	14	15	16	17	18	19	20
..	0·75	..	..	..	..	..	..	..	..	..	..	..
..	..	..	..	..	..	..	..	..	..	..	..	..
0·08	0·02	..	..	..	..	..	..	..	..	..	..	..
..	..	..	..	..	..	..	..	..	..	..	..	..
..	..	..	..	..	..	..	..	..	..	..	..	..
..	0·15	..	..	..	..	..	..	..	..	..	..	..
..	..	..	..	..	..	..	..	..	..	..	..	..
..	1·10	0·07	..	..	..	..	..	..	..	..	..	..
..	1·25	..	..	..	..	..	..	..	..	..	..	..
..	..	..	..	..	..	..	..	..	..	..	..	..
0·48	..	..	..	..	..	..	..	..	..	..	..	..
..	..	1·35	..	..	..	..	..	..	..	..	..	..
..	0·02	..	..	..	..	..	..	..	..	..	..	..
..	0·22	0·38	..	..	..	..	..	..	..	..	..	..
..	..	0·03	..	..	..	..	..	..	..	..	..	..
..	..	0·41	..	..	..	..	..	..	..	..	..	..
..	0·05	0·09	..	..	..	..	..	..	..	..	..	..
0·46	0·18	..	..	..	..	..	..	..	..	..	..	..
..	..	0·22	..	..	..	..	..	..	..	..	..	..
..	0·46	..	..	..	..	..	..	..	..	..	..	..
..	0·64	0·94	..	..	..	..	..	..	..	..	..	..
..	..	0·69	..	..	..	..	..	..	..	..	..	..
..	..	1·14	..	..	..	..	..	..	..	..	..	..
..	0·01	0·12	..	..	..	..	..	..	..	..	..	..
..	..	0·75	..	..	..	..	..	..	..	..	..	..
..	0·01	1·27	..	0·01	..	..	..	..	..	..	..	..
..	0·20	..	..	..	..	..	..	..	..	..	..	..
..	0·96	..	..	..	..	..	..	..	..	..	..	..
..	..	..	..	..	..	..	..	..	..	..	..	..
..	..	..	..	..	..	..	..	..	..	..	..	..
..	..	..	..	..	..	..	..	..	..	..	..	..
..	..	..	..	..	..	..	..	..	..	..	..	..
..	..	0·21	..	..	..	..	..	..	..	..	..	..
0·06	..	..	..	..	..	..	..	..	..	..	..	..
..	..	1·01	..	..	..	..	..	..	..	..	..	..
0·35	0·02	..	..	..	..	..	..	..	..	..	..	..
..	1·52	..	..	..	..	..	..	..	..	..	..	..
..	..	..	..	..	..	..	..	..	..	..	..	..
0·25	..	..	..	..	..	..	..	..	..	..	..	..
..	0·95	..	..	..	..	..	..	..	..	..	..	..
..	0·36	..	..	..	..	..	..	..	..	..	..	..
0·58	0·08	..	..	..	..	..	..	..	..	..	..	..
0·26	0·02	0·18	..	..	..	..	..	..	..	..	..	..
..	0·24	..	..	..	..	..	..	..	..	..	..	..
0·40	0·20	0·04	..	..	..	..	..	..	..	..	..	..
..	0·04	0·30	..	..	..	..	..	..	..	..	..	..
..	0·05	..	..	..	..	..	..	..	..	..	..	..
..	..	..	..	..	..	..	..	..	..	..	..	..
1·13	..	..	..	..	..	..	..	..	..	..	..	..
..	..	..	..	..	..	..	..	..	..	..	..	..
0·03	..	..	..	..	..	..	..	..	..	..	..	..
..	0·16	1·12	..	..	..	..	..	..	..	..	..	..
0·02	0·09	0·38	..	..	..	..	..	..	..	..	..	..
..	..	0·05	0·20	1·70	0·42	..	..	..	..	..	..	..
0·09	0·08	0·38	..	..	..	..	..	..	..	..	..	..
..	..	0·33	..	..	..	..	..	..	..	..	..	..
0·11	0·25	0·08	..	..	..	..	..	..	..	..	..	..
0·35	0·40	..	..	..	..	..	..	..	..	..	..	..
..	0·48	0·18	..	..	..	..	..	..	..	..	..	..

DAILY RAINFALL RECORDED IN BENGAL

Division and district.	Station.	21	22	23	24	25	26	27
Rajshahi—*concld.*								
Dinajpur ..	Nithpur	..	..	..	..	..	..	..
	Nawabganj	..	..	..	..	..	..	..
	Gangarampur	..	..	..	..	..	..	..
	Itahar	..	..	..	..	..	..	..
	Raiganj	..	..	..	..	..	..	..
	Dinajpur (Obsy.)	..	..	..	..	..	..	..
	Balurghat	..	..	..	..	..	..	..
	Thakurgaon	..	..	..	..	..	..	..
	Setabganj	..	..	..	..	..	..	..
	Ramganj	..	..	..	..	..	..	..
	Atwari*							
	Birganj	..	..	..	..	..	..	..
	Parbatipur	..	..	..	..	..	..	..
	Patnitola	..	..	..	..	..	..	..
	Sapahar*							
Jalpaiguri ..	Jalpaiguri (Obsy.)	..	..	..	..	..	..	..
	Alipur Duars	..	..	..	..	..	..	..
	Falakata	..	..	..	..	..	..	..
	Debiganj	..	..	..	..	..	..	..
	Buxa	..	..	..	..	..	..	..
	Kalchini	..	..	..	..	..	..	..
	Kumargram	..	..	..	..	..	..	..
Darjeeling ..	Siliguri	..	..	..	..	..	..	..
	Darjeeling (Obsy.)	..	0·03	..	..	..	..	..
	Kalimpong (Obsy.) ..	..	..	..	..	..	..	..
	Mongpoo	..	0·02	..	..	..	..	..
	Kurseong	..	..	..	..	..	..	..
	Pedong	..	0·01	..	..	..	..	..
Rangpur ..	Bhawaniganj (Gaibandha)	..	..	..	..	..	..	..
	Rangpur (Obsy.)	..	..	..	..	..	..	..
	Pirganj	..	..	..	..	..	..	..
	Kurigaon	..	..	..	..	..	..	..
	Gobindganj*							
	Bagdogra (Nilphamari)	..	..	..	..	..	..	..
	Ulipur	..	..	..	..	..	..	..
	Sunderganj	..	..	..	..	..	..	..
	Saidpur	..	..	..	..	..	..	..
Bogra ..	Sherpur	..	..	..	..	..	..	..
	Nowkhilla	..	..	..	..	..	..	..
	Bogra (Obsy.)	..	..	..	..	..	..	..
	Panchbibi	..	..	..	..	..	..	..
	Khetlal	..	..	..	..	..	..	..
	Adamdighi	..	..	..	..	..	..	..
	Dubchanchia	..	..	..	..	..	..	..
Pabna ..	Shazadpur	..	..	..	..	..	..	..
	Pabna	..	..	..	..	..	..	..
	Sirajganj (Obsy.)	..	..	..	..	..	..	..
	Iswardi	..	..	..	..	..	..	..
Malda ..	Malda (Obsy.)	..	..	..	..	..	..	..
	Chanchal	..	..	..	..	..	..	..
	Gazol	..	..	..	..	..	..	..
	Sibganj	..	..	..	..	..	..	..
	Gomastapur	..	..	..	..	..	..	..
	Nawabganj	..	..	..	..	..	..	..
Dacca.								
Dacca ..	Munshiganj	..	..	..	..	..	..	..
	Dacca	..	..	..	..	..	..	..
	Nawabganj	..	..	..	..	..	..	..
	Narayanganj (Obsy.)	..	..	..	..	..	..	..
	Narsingdi	..	..	..	..	..	..	..
	Manickganj	..	..	..	..	..	..	..
	Joydebpur	..	..	..	..	..	..	..
	Kapasia	..	..	..	..	..	..	..

* Not reported.

FOR THE MONTH OF DECEMBER 1934.

28	29	30	31	Number of rainy days.	Average number of rainy days.	Total rainfall for the month.	Normal rainfall for the month.	Heaviest rainfall during the month.	Total rainfall from 1st to 31st December 1934.	Normal rainfall from 1st to 31st December 1934.
..	..	..	..	1	0·0	0·75	0·00	0·75	0·75	0·00
..	..	..	..	Nil	0·0	Nil	0·00	Nil	Nil	0·00
..	..	..	..	Nil	0·0	0·10	0·15	0·08	0·10	0·15
..	..	..	..	Nil	0·2	Nil	0·09	Nil	Nil	0·09
..	..	..	..	Nil	0·2	Nil	0·11	Nil	Nil	0·11
..	..	..	..	1	0·1	0·15	0·06	0·15	0·15	0·06
..	..	..	..	Nil	0·1	Nil	0·08	Nil	Nil	0·08
..	..	..	..	1	0·0	1·17	0·05	1·10	1·17	0·05
..	..	..	..	1	0·1	1·25	0·06	1·25	1·25	0·06
..	..	..	..	Nil	0·0	Nil	0·01	Nil	Nil	0·01
					0·1		0·02			0·02
..	..	..	..	1	0·1	0·48	0·07	0·48	0·48	0·07
..	..	..	..	1	0·1	1·35	0·03	1·35	1·35	0·03
..	..	..	..	Nil	(*n*)	0·02	(*n*)	0·02	0·02	(*n*)
					(*n*)		(*n*)			(*n*)
..	..	..	..	2	0·3	0·60	0·11	0·38	0·60	0·11
..	..	..	..	Nil	0·4	0·05	0·14	0·03	0·05	0·14
..	..	..	..	1	0·3	0·41	0·11	0·41	0·41	0·11
..	..	..	..	Nil	0·1	0·14	0·05	0·09	0·14	0·05
0·03	..	..	..	2	1·5	0·67	0·61	0·46	0·67	0·61
..	..	..	..	1	0·4	0·22	0·15	0·22	0·22	0·15
..	..	..	..	1	0·1	0·46	0·22	0·46	0·46	0·22
..	..	..	..	2	0·3	1·58	0·10	0·94	1·58	0·10
..	..	..	..	1	0·6	0·72	0·24	0·69	0·72	0·24
..	..	..	..	1	0·7	1·14	0·27	1·14	1·14	0·27
..	0·01	..	..	1	0·8	0·16	0·31	0·12	0·16	0·31
..	..	..	..	1	0·7	0·75	0·26	0·75	0·75	0·26
..	..	..	..	1	1·1	1·30	0·44	1·27	1·30	0·44
..	..	..	..	1	0·2	0·20	0·09	0·20	0·20	0·09
..	..	..	..	1	0·2	0·96	0·04	0·96	0·96	0·04
..	..	..	..	Nil	0·2	Nil	0·10	Nil	Nil	0·10
..	..	..	..	Nil	0·2	Nil	0·10	Nil	Nil	0·10
					0·1		0·06			0·06
..	..	..	..	Nil	0·2	Nil	0·08	Nil	Nil	0·08
..	..	..	..	Nil	0·2	Nil	0·06	Nil	Nil	0·06
..	..	..	..	1	0·2	0·21	0·07	0·21	0·21	0·07
..	..	..	..	Nil	0·0	0·06	0·05	0·06	0·06	0·05
..	..	..	..	1	0·3	1·01	0·12	1·01	1·01	0·12
..	..	..	..	1	0·2	0·37	0·11	0·35	0·37	0·11
..	..	..	..	1	0·1	1·52	0·05	1·52	1·52	0·05
..	..	..	..	Nil	0·2	Nil	0·09	Nil	Nil	0·09
..	..	..	..	1	0·0	0·25	0·00	0·25	0·25	0·00
..	..	..	..	1	(*n*)	0·95	(*n*)	0·95	0·95	(*n*)
..	..	..	..	1	(*n*)	0·36	(*n*)	0·36	0·36	(*n*)
..	..	..	..	3	0·2	1·29	0·13	0·58	1·29	0·13
..	..	..	..	2	0·2	0·51	0·11	0·26	0·51	0·11
..	..	..	..	1	0·3	0·24	0·11	0·24	0·24	0·11
..	..	..	..	3	0·2	1·05	0·18	0·41	1·05	0·18
..	..	..	..	1	0·1	0·34	0·05	0·30	0·34	0·05
..	..	..	..	Nil	0·1	0·05	0·05	0·05	0·05	0·05
..	..	..	..	Nil	0·1	Nil	0·05	Nil	Nil	0·05
..	..	..	..	1	0·2	1·13	0·08	1·13	1·13	0·08
..	..	..	..	Nil	0·1	Nil	0·10	Nil	Nil	0·10
..	..	..	..	1	0·2	0·22	0·10	0·19	0·22	0·10
..	..	..	..	2	0·5	1·28	0·21	1·12	1·28	0·21
..	..	..	..	1	0·4	0·49	0·17	0·38	0·49	0·17
..	..	..	..	3	0·3	2·37	0·21	1·70	2·37	0·21
..	..	..	..	1	0·5	0·55	0·19	0·38	0·55	0·19
..	..	..	..	1	0·5	0·33	0·27	0·33	0·33	0·27
..	..	..	..	3	0·3	0·71	0·15	0·27	0·71	0·15
..	..	..	..	2	0·4	0·83	0·13	0·40	0·83	0·13
..	..	..	..	2	0·4	0·66	0·14	0·48	0·66	0·14

(*n*) Not ascertained.

DAILY RAINFALL RECORDED IN BENGAL

Division and district.	Station.	1	2	3	4	5	6	7
Dacca—*concld.*								
Mymensingh ..	Kishoreganj	..	..	..	..	..	..	..
	Atia (Tangail)	..	..	..	..	..	..	0·08
	Sarisabari	..	..	..	..	..	..	..
	Mymensingh (Obsy.) ..	..	..	..	..	..	..	..
	Jamalpur	..	..	..	..	..	..	..
	Netrokona	..	..	..	..	..	..	..
	Pingna	..	..	..	..	..	..	..
	Durgapur*							
	Sherpur (Town)	..	..	..	..	..	..	..
	Dewanganj	..	..	..	..	..	..	..
	Nalitabari	..	..	..	..	..	..	..
Faridpur ..	Madaripur	..	..	..	..	..	..	..
	Faridpur (Obsy.) ..	..	..	..	..	..	..	0·01
	Rajbari (Goalundo) ..	..	..	..	..	..	..	0·04
	Haridaspur	..	..	..	..	..	..	..
	Takerhat	..	..	..	..	..	..	0·11
	Bhanga	..	..	..	..	..	..	0·15
	Pangsa	..	..	..	..	..	0·20	0·12
	Baliakandi	..	..	..	..	..	..	0·07
	Bhusna	..	..	..	..	..	..	..
	Palong	..	..	..	..	..	..	..
Bakarganj ..	Patuakhali	..	..	..	..	..	..	..
	Barguna	..	..	..	..	..	..	..
	Pirojpur	..	..	..	..	..	..	0·02
	Barisal (Obsy.) ..	..	..	..	..	..	..	..
	Gaurnadi	..	..	..	..	..	..	..
	Bhola	..	..	..	..	..	..	..
	Daulatkhan	..	..	..	..	..	..	..
	Bauphal	..	..	..	..	..	..	..
Chittagong.								
Chittagong ..	Cox's Bazar (Obsy.) ..	..	..	..	..	..	..	..
	Chittagong (Obsy.) ..	..	..	..	..	..	..	..
	Kutubdia	..	..	..	..	..	..	..
	Satkania	..	..	..	..	..	..	..
	Mirsarai	..	..	..	..	..	..	..
	Rangunia	..	..	..	..	..	..	..
Tippera ..	Comilla (Obsy.)	..	..	..	..	..	..	..
	Chandpur	..	..	..	..	..	..	..
	Brahmanbaria	..	..	..	..	..	..	..
	Ramchandrapur	..	..	..	..	..	..	..
	Nasirnagar*							
	Daudkandi*							
	Kasba	..	..	..	..	..	..	..
	Laksam	..	..	..	..	..	..	..
Noakhali ..	Noakhali (Obsy.)	..	..	..	..	..	..	..
	Feni	..	..	..	..	..	..	..
	Harishpur	..	..	..	..	..	..	..
	Ramganj	..	..	..	..	..	..	..
	Chhagalnaya	..	..	..	..	..	..	..
	Hatiya	..	..	..	..	..	..	..
	Lakhimpur	..	..	..	..	..	..	..
Chittagong Hill Tracts	Rangamati	..	..	..	..	..	..	..
	Bandarban	..	..	..	..	..	..	..
	Barkal	..	..	..	..	..	..	..
	Mahalchari	..	..	..	..	..	..	..
	Lama	..	..	..	..	..	..	..
	Ramgarh	..	..	..	..	..	..	..
	Manikseri	..	..	..	..	..	..	..
	Dighinala	..	..	..	..	..	..	..
	Mainmukh	..	..	..	..	..	..	..
	Kaptai*							
	Panchhari	..	..	..	..	..	..	..
	Nakhyongchhari ..	..	..	..	..	..	..	..
Tripura State ..	Agartala	..		..	..	..	0·44	..
Cooch Behar ..	Dinhata	..	..	..	..	..	..	..
	Cooch Behar (Obsy.) ..	..	..	..	..	..	..	..
	Mickliganj	..	..	..	..	..	..	..
	Mathabhanga	..	..	..	..	..	..	..
	Fulbaria (Tufanganj) ..	..	..	..	..	..	..	..

*Not reported.

FOR THE MONTH OF DECEMBER 1934.

8	9	10	11	12	13	14	15	16	17	18	19	20
..	0·60	0·21	..	..	..	..	..	..	..	..	..	..
0·67	..	..	..	..	..	..	..	..	..	..	..	..
..	..	..	..	..	..	..	..	..	..	..	..	..
..	0·99	0·08	0·02	..	..	..	..	..	..	..	..	..
..	0·46	..	..	..	..	..	..	..	..	..	..	..
..	..	0·02	..	..	..	..	..	..	..	..	..	..
..	0·20	0·05	..	..	..	..	..	..	..	..	..	..
..	0·35	0·10	..	..	..	..	..	..	..	..	..	..
..	0·40	..	..	..	..	..	..	..	..	..	..	..
..	0·18	..	..	..	..	..	..	..	..	..	..	..
0·07	..	3·06	..	..	..	..	..	..	..	..	..	..
0·10	0·05	0·40	..	..	..	..	..	..	..	..	..	
0·06	0·03	0·37	..	..	..	..	..	..	..	..	..	..
0·04	..	1·36	..	..	..	..	..	..	..	..	..	..
..	1·85	..	..	..	..	..	..	..	..	..	..	..
0·83	1·15	..	..	..	..	..	..	..	..	..	..	..
..	..	0·48	..	..	..	..	..	..	..	..	..	..
..	..	0·50	..	..	..	..	..	..	..	..	..	..
0·58	..	0·15	..	..	..	..	..	..	..	..	..	..
..	..	..	..	..	..	..	..	..	..	..	..	..
..	..	..	..	..	..	..	..	..	..	..	..	..
..	..	..	..	..	..	..	..	..	..	..	..	..
..	0·27	..	..	..	..	..	..	..	.	..	..	..
..	0·15	0·65	..	..	..	..	..	..	..	..	..	..
..	..	..	..	..	..	..	..	..	..	..	..	..
..	0·11	0·83	..	..	..	..	..	..	..	..	..	..
..	0·08	0·82	..	..	..	..	..	..	..	..	..	..
0·41	0·37	..	..	..	..	..	..	..	..	..	..	..
..	..	..	0·04	..	..	..	..	..	..	..	..	..
..	..	..	0·33	..	..	..	..	..	..	..	..	..
..	..	..	..	..	..	..	..	..	..	..	..	..
..	..	..	..	..	..	..	..	..	..	..	..	..
..	..	0·42	..	..	..	..	..	..	..	..	..	..
..	..	0·12	..	..	..	..	..	..	..	..	..	..
.	..	0·31	..	..	..	..	..	..	..	..	..	..
..	..	2·31	..	..	..	..	..	..	..	..	..	..
..	0·09	1·05	..	..	..	..	..	..	..	..	..	..
..	..	0·60	..	..	..	..	..	..	..	..	..	..
..	0·68	0·42	..	..	..	..	..	..	..	..	..	..
..	..	..	..	..	..	..	..	..	..	..	..	..
..	..	0·87	0·12	..	..	..	..	..	..	..	..	..
..	..	1·02	..	..	..	..	..	..	..	..	..	..
..	..	..	..	..	..	..	..	..	..	.	..	..
..	..	1·25	..	..	..	..	..	..	..	..	..	..
..	..	..	..	..	..	..	..	..	..	..	..	..
..	0·90	..	..	..	..	..	..	..	..	..	..	..
..	..	1·20	..	..	..	..	..	..	..	..	..	..
..	..	..	..	..	..	..	..	..	..	..	..	..
..	..	..	..	..	..	..	..	..	..	..	..	..
..	..	..	..	..	..	..	..	..	..	..	..	..
..	..	0·20	0·30	..	..	..	..	..	..	..	..	..
..	..	..	..	..	..	..	..	..	..	..	..	..
..	..	0·41	..	..	..	..	..	..	..	..	..	..
..	0·12	0·45	..	..	..	..	..	..	..	..	..	..
..	..	..	0·12	..	..	..	..	..	..	..	..	..
..	..	0·06	0·18	..	..	..	..	..	..	..	..	..
..	..	0·11	0·24	..	..	..	..	..	..	..	..	..
..	..	..	0·37	..	..	..	..	..	..	..	..	..
..	..	..	..	..	..	..	..	..	..	..	..	..
..	..	..	..	..	..	..	..	..	..	..	..	..
..	..	0·28	..	..	..	..	..	..	..	..	..	..
..	..	0·04	..	..	..	..	..	..	..	..	..	..
..	..	..	..	..	..	..	..	..	..	..	..	..
..	..	0·03	..	..	..	..	..	..	..	..	..	..

DAILY RAINFALL RECORDED IN BENGAL

Division and district.	Station.	21	22	23	24	25	26	27
Dacca—*concld.*								
Mymensingh ..	Kishoreganj ..	..	..	..	..	..	..	..
	Atia (Tangail) ..	..	..	..	..	..	..	..
	Sarisabari ..	..	..	..	..	..	..	..
	Mymensingh (Obsy.)	..	..	..	..	..	..	..
	Jamalpur ..	..	..	..	..	..	..	..
	Netrokona ..	..	..	..	..	..	..	..
	Pingna ..	..	..	..	..	..	..	..
	Durgapur* ..	..						
	Sherpur (Town) ..	..	..	..	..	..	..	..
	Dewanganj ..	..	..	..	..	..	..	..
	Nalitabari ..	..	..	..	..	..	..	..
Faridpur ..	Madaripur ..	..	..	..	..	..	..	..
	Faridpur (Obsy.) ..	..	..	..	..	..	..	..
	Rajbari (Goalundo)	..	..	..	..	..	..	..
	Haridaspur ..	..	..	..	..	..	..	..
	Takerhat ..	..	..	..	..	..	..	..
	Bhanga ..	..	..	..	..	..	..	..
	Pangsa ..	..	..	..	..	..	..	..
	Baliakandi ..	..	..	..	..	..	..	..
	Bhusna ..	..	..	..	..	..	..	..
	Palong ..	..	..	..	..	..	..	..
Bakarganj ..	Patuakhali ..	..	..	..	..	..	..	..
	Barguna ..	..	..	..	..	..	..	..
	Pirojpur ..	..	..	..	..	..	..	..
	Barisal (Obsy.) ..	..	..	..	..	..	..	..
	Gaurnadi ..	..	..	..	..	..	..	..
	Bhola ..	..	..	..	..	..	..	..
	Daulatkhan ..	..	..	..	..	..	..	..
	Bauphal ..	..	..	..	..	..	..	..
Chittagong.								
Chittagong ..	Cox's Bazar (Obsy.)	..	..	..	..	..	..	..
	Chittagong (Obsy.)	..	..	..	..	..	..	..
	Kutubdia ..	..	..	..	..	..	..	..
	Satkania ..	..	..	..	..	..	..	..
	Mirsarai ..	..	..	..	..	..	..	..
	Rangunia ..	..	..	..	..	..	..	..
Tippera ..	Comilla (Obsy.) ..	..	..	..	..	..	..	..
	Chandpur ..	..	..	..	..	..	..	..
	Brahmanbaria ..	..	..	..	..	..	..	..
	Ramchandrapur ..	..	..	..	..	..	..	..
	Nasirnagar* ..	..						
	Daudkandi* ..	..						
	Kasba ..	..	..	..	..	..	..	..
	Laksam ..	..	..	..	..	..	..	..
Noakhali ..	Noakhali (Obsy.) ..	..	..	..	..	..	..	..
	Feni ..	..	..	..	..	..	..	..
	Harishpur ..	..	..	..	..	..	..	..
	Ramganj ..	..	..	..	..	..	..	..
	Chhagalnaya ..	..	..	..	..	..	..	..
	Hatiya ..	..	..	..	..	..	..	..
	Lakhimpur ..	..	..	..	..	..	..	..
Chittagong Hill Tracts	Rangamati ..	..	..	..	..	..	..	..
	Bandarban ..	..	..	..	..	..	..	..
	Barkal ..	..	..	..	..	..	..	..
	Mahalchari ..	..	..	..	..	..	..	..
	Lama ..	..	..	..	..	..	..	..
	Ramgarh ..	..	..	..	..	..	..	..
	Manikseri ..	..	..	..	..	..	..	..
	Dighinala ..	..	..	..	..	..	..	..
	Mainmukh ..	..	..	..	..	..	..	..
	Kaptai* ..	..						
	Panchhari ..	..	..	..	..	..	..	..
	Nakhyongchhari ..	..	..	..	..	..	..	..
Tripura State ..	Agartala ..	..	..	..	..	..	..	..
Cooch Behar ..	Dinhata ..	..	..	..	..	..	..	..
	Cooch Behar (Obsy.)	..	..	..	..	..	..	..
	Mikliganj ..	..	..	..	..	..	..	..
	Mathabhanga ..	..	..	..	..	..	..	..
	Fulbaria (Tufanganj)	..	..	..	..	..	..	..

*Not reported.

Dacca, the 23rd January 1935.

FOR THE MONTH OF DECEMBER 1934.

28	29	30	31	Number of rainy days.	Average number of rainy days.	Total rainfall for the month.	Normal rainfall for the month.	Heaviest rainfall during the month.	Total rainfall from 1st to 31st December 1934.	Normal rainfall from 1st to 31st December 1934.
..	..	..	..	2	0·4	0·81	0·19	0·60	0·81	0·19
..	..	..	..	1	0·3	0·75	0·10	0·67	0·75	0·10
..	..	..	..	Nil	0·2	Nil	0·26	Nil	Nil	0·26
..	..	..	..	1	0·3	1·09	0·07	0·99	1·09	0·07
..	..	..	..	1	0·3	0·46	0·13	0·46	0·46	0·13
..	..	..	..	Nil	0·4	0·02	0·12	0·02	0·02	0·12
..	..	..	..	1	0·1	0·25	0·05	0·20	0·25	0·05
					0·1		0·04			0·04
..	..	..	..	2	0·1	0·45	0·04	0·35	0·45	0·04
..	..	..	..	1	0·1	0·40	0·03	0·40	0·40	0·03
..	..	..	..	1	0·2	0·18	0·04	0·18	0·18	0·04
..	..	..	..	1	0·3	3·13	0·17	3·06	3·13	0·17
..	..	..	..	2	0·3	0·56	0·12	0·40	0·56	0·12
..	..	..	..	1	0·3	0·50	0·12	0·37	0·50	0·12
..	..	..	..	1	0·5	1·40	0·22	1·36	1·40	0·22
..	..	..	..	2	0·5	1·96	0·28	1·85	1·96	0·28
..	..	..	..	3	0·4	2·13	0·17	1·15	2·13	0·17
..	..	..	..	3	0·3	0·80	0·22	0·48	0·80	0·22
..	..	..	..	1	0·4	0·57	0·43	0·50	0·57	0·43
..	..	..	..	2	0·5	0·73	0·22	0·58	0·73	0·22
..	..	..	..	Nil	0·5	Nil	0·28	Nil	Nil	0·28
..	..	..	..	Nil	0·5	Nil	0·42	Nil	Nil	0·42
..	..	..	..	Nil	0·4	Nil	0·20	Nil	Nil	0·20
..	..	..	..	1	0·4	0·29	0·22	0·27	0·29	0·22
..	..	..	..	2	0·7	0·80	0·39	0·65	0·80	0·39
..	..	..	..	Nil	0·2	Nil	0·16	Nil	Nil	0·16
..	..	..	..	2	0·5	0·94	0·33	0·83	0·94	0·33
..	..	..	..	1	0·5	0·90	0·25	0·82	0·90	0·25
..	..	..	..	2	0·4	0·78	0·39	0·41	0·78	0·39
..	..	(*a*)	..	Nil	0·6	0·04	0·51	0·04	0·04	0·51
..	..	..	..	1	0·8	0·33	0·70	0·33	0·33	0·70
..	..	..	..	Nil	0·4	Nil	0·52	Nil	Nil	0·52
..	..	..	..	Nil	0·4	Nil	0·38	Nil	Nil	0·38
..	..	..	..	1	0·4	0·42	0·46	0·42	0·42	0·46
..	..	..	..	1	(*n*)	0·12	(*n*)	0·12	0·12	(*n*)
..	..	..	..	1	0·3	0·31	0·23	0·31	0·31	0·23
..	..	..	..	1	0·5	2·31	0·25	2·31	2·31	0·25
..	..	..	..	1	0·5	1·14	0·23	1·05	1·14	0·23
..	..	..	..	1	0·2	0·60	0·10	0·60	0·60	0·10
					0·3		0·16			0·16
					0·3		0·11			0·11
..	..	..	..	2	0·4	1·10	0·23	0·68	1·10	0·23
..	..	..	..	Nil	0·3	Nil	0·22	Nil	Nil	0·22
..	..	..	..	2	0·4	0·99	0·28	0·87	0·99	0·28
..	..	..	..	1	0·6	1·02	0·52	1·02	1·02	0·52
..	..	..	..	Nil	0·4	Nil	0·45	Nil	Nil	0·45
..	..	..	..	1	0·3	1·25	0·22	1·25	1·25	0·22
..	..	..	..	Nil	0·6	Nil	0·35	Nil	Nil	0·35
..	..	..	..	1	0·5	0·90	0·39	0·90	0·90	0·39
..	..	..	..	1	0·4	1·20	0·23	1·20	1·20	0·23
..	..	..	..	Nil	0·7	Nil	0·56	Nil	Nil	0·56
..	..	..	..	Nil	0·7	Nil	0·49	Nil	Nil	0·49
..	..	..	..	Nil	0·7	Nil	0·64	Nil	Nil	0·64
..	..	..	..	2	0·0	0·50	0·01	0·20	0·50	0·01
..	..	..	..	Nil	0·4	Nil	0·09	Nil	Nil	0·09
..	..	..	..	1	0·0	0·41	0·00	0·41	0·41	0·00
..	..	..	..	2	(*n*)	0·57	(*n*)	0·45	0·57	(*n*)
..	..	..	..	1	(*n*)	0·12	(*n*)	0·12	0·12	(*n*)
..	..	..	..	1	(*n*)	0·24	(*n*)	0·18	0·24	(*n*)
					(*n*)		(*n*)			(*n*)
..	..	..	..	2	(*n*)	0·35	(*n*)	0·24	0·35	(*n*)
..	..	..	..	1	(*n*)	0·37	(*n*)	0·37	0·37	(*n*)
..	..	..	..	1	0·4	0·44	0·30	0·44	0·44	0·30
..	..	..	..	Nil	0·2	Nil	0·09	Nil	Nil	0·09
..	..	..	..	1	0·3	0·28	0·10	0·28	0·28	0·10
..	..	..	..	Nil	0·2	0·04	0·12	0·04	0·04	0·12
..	..	..	..	Nil	0·2	Nil	0·08	Nil	Nil	0·08
..	..	..	..	Nil	0·3	0·03	0·15	0·03	0·03	0·15

(*a*) Not reported.

(*n*) Not ascertained.

J. C. BASU, for *Director of Agriculture, Bengal.*

CALCUTTA IMPROVEMENT TRUST.

Calcutta, the 16th January 1935.

Notice under section 43 of Bengal Act V of 1911 (the Calcutta Improvement Act, 1911) as amended up to 1931.

Scheme No. XLV (Howrah Bridge Approach —Dalhousie Square North to Canning Street).

The Board of Trustees for the Improvement of Calcutta hereby give notice that a Street Scheme (for the construction of a main 100′ road and subsidiary roads), namely, Scheme No. XLV, has been framed for the area bounded as follows:—

On the North—From a point on the centre line of Canning Street where it meets the northward prolongation of the eastern edge of Clive Row, running eastwards along the centre line of Canning Street to a point opposite Ezra Street.

On the East—From this point in a straight line southwards along the western edge of Ezra Street to a point opposite Parsi Church Street. Thence eastwards across Ezra Street and along the southern edge of Parsi Church Street to a point where it meets the centre line of Lower Chitpore Road. Thence southwards along the centre line of Lower Chitpore Road to the centre point of the junction of Lower Chitpore Road and Lal Bazar Street.

On the South—From this point running westwards along the centre line of Lal Bazar Street to a point opposite Lyons Range.

On the West—From this point running northwards along the western and southern edges of Lyons Range to a point opposite Royal Exchange Place. Thence northwards along the western and the southern edges of Royal Exchange Place to its junction with the eastern edge of Clive Street. From this point across Royal Exchange Place straight northwards along the eastern edge of Clive Street, thence along the eastern edge of Clive Row to the starting point.

Particulars of the scheme, map of the area comprised in the scheme and a statement of land which it is proposed to acquire and on which a betterment fee is proposed to be levied may be inspected at the offices of the Trust at No. 5, Clive Street, on week days between the hours of 11 a.m. and 4 p.m. and on Saturdays between the hours of 11 a.m. and 2 p.m.

Copies of the above documents will be delivered to the applicants on payment of following fees:—

Particulars of the scheme—As. 4.

Map of the area comprised in the scheme—Re. 1.

Statement of land proposed to be acquired and also land on which a betterment fee is proposed to be levied—As. 4.

Objections to the scheme will be received up to 30th April 1935.

C. W. GURNER, *Chairman* (*offg.*).

NOTICE.

5, Clive Street, Calcutta, the 23rd January 1935.

Notice is hereby given under section 47 (*3*) of the Calcutta Improvement Act, 1911, as amended up to 1931, that the Board of Trustees for the Improvement of Calcutta have applied to the Local Government for sanction to Improvement Scheme No. XLI (Chandni Chak Street Widening), which was first published in the *Calcutta Gazette* and in local newspapers on 8th March 1934.

C. W. GURNER, *Chairman* (*offg.*).

CORPORATION OF CALCUTTA.

NOTICE.

Central Municipal Office, the 31st January 1935.

Notice is hereby given for the information of the public that in exercise of the powers conferred by section 24 of the Calcutta Tramways Act, I of 1880 (B.C.), the following regulation has been made by the Calcutta Tramways Co., Ltd., and confirmed by the Government of Bengal (Ministry of Local Self-Government) in their order No. 5463M., dated the 1st December 1934:—

"6A. (*1*) No male person above the age of five years shall occupy in any car any seat marked "For Ladies" or any portion of such seat, except when—

(*a*) there is no lady present in the car, or

(*b*) no lady present in the car desires to occupy the said seat or any portion of the said seat.

(*2*) Notwithstanding anything contained in clause (*1*), any male person above the age of five years occupying any such seat shall vacate the same when called upon to do so by the conductor or other authorised officer of the Company being in uniform.

In this regulation "Lady" means a female passenger over five years of age, and "seat" includes a complete bench whether containing one or more than one seat.

The penalty for infringement of this regulation shall be a fine not exceeding Rs. 20."

J. C. MUKERJEA,

Chief Executive Officer.

DISTRICT REPORTS ON WEATHER AND CROPS.

For the week ending on the 23rd January 1935.

Summary.—During the week light and scattered showers fell over the greater part of the Presidency. Preparatory tillage for autumn crops continues in places. Harvesting of winter paddy is over; threshing is going on briskly. Prospects of standing crops are generally satisfactory. During the week ending Saturday, the 19th January 1935, 6,379 persons attended different relief centres and 855 persons received gratuitous relief in the distressed areas of Murshidabad. In Birbhum 4,900 men were employed on test relief works on Saturday, the 19th January 1935. Test relief works have also been opened in parts of Bankura where the attendance was 1,423 during the period from the 15th to 19th January 1935. The average price of common rice for the province has risen by about 0·56 per cent. as compared with that of the previous week.

Serial No.	District and subdivision.	Rainfall.	Price of common rice, in seers, per rupee.		Character of the weather, condition of crops, etc.
			This week.	Previous week.	
1	2	3	4	5	6
		Inches.			
1	24-Parganas ..	Nil	10 11/16	11½	Weather seasonable. No damage to crops is reported. Fodder and water are sufficient. Export and import normal.
	Diamond Harbour	Nil	14	14	
	Barrackpore ..	Nil	10½	10½	
	Baraset ..	Nil	10	10	
	Basirhat ..	Nil	12½	12½	
2	Nadia ..	0·39	11½	11½	Weather seasonable. No export and import. Harvesting of sugarcane continues. Prospects of standing crops are fair. Fodder and water are sufficient.
	Kushtia ..	0·22	11½	11½	
	Meherpur ..	0·17	11	11	
	Chuadanga ..	0·31	11	11	
	Ranaghat ..	0·50	10	10	
3	Murshidabad ..	0·27	12	12	Weather seasonable. Prospects of standing crops are not good in Kandi subdivision. Stock of rice, fodder and water are sufficient. No large export or import. Cattle-disease is reported from Jangipur and Kandi subdivisions. Test relief works continue. 5,666 men, 545 women and 168 children attended relief centres during the week ending Saturday, the 19th January 1935. Number of persons receiving gratuitous relief in the distressed areas was 176, 385 and 294 in Lalbagh, Kandi and Jangipur subdivisions, respectively.
	Lalbagh ..	0·70	12	12	
	Jangipur ..	0·29	12½	13	
	Kandi ..	1·57	13	13	
4	Jessore ..	0·75	11	11	Weather seasonable. Prospects of standing crops are fair. No large export or import. Fodder and water are sufficient. Cattle-disease is reported from Kalia police-station.
	Jhenidah ..	0·30	13	13	
	Magura ..	Nil	12	12	
	Narail ..	0·10	13	14	
	Bongaon ..	Nil	10	10	
5	Khulna ..	Nil	12	13	Weather seasonable. Its effects on crops are good. Fodder and water are sufficient.
	Satkhira ..	2·07	13	15	
	Bagerhat ..	Nil	12	11	

Serial No.	District and sub-division.	Rainfall.	Price of common rice, in seers, per rupee.		Character of the weather, condition of crops, etc.
			This week.	Previous week.	
1	2	3	4	5	6
		Inches.			
6	Burdwan ..	0·21	11	11	Weather cold. Condition of crop is not satisfactory. Fodder and water are sufficient.
	Asansol ..	0·44	10½	10	
	Katwa ..	0·75	12	11	
	Kalna ..	0·55	10	10	
7	Birbhum ..	1·15	13	13	Weather seasonable. Prospects of standing crops are fair. Fodder and water are sufficient. 4,900 men were employed on test relief works on Saturday, the 19th January 1935.
	Rampurhat ..	0·80	11	11	
8	Bankura ..	0·44	12	12	Weather seasonable. Threshing of winter paddy continues. Stock of rice is sufficient. No large export or import. Prospects of standing crops are fair. Cattle-disease is reported from Bankura police-station. Test works have been opened by the District Board on 15th January 1935 in parts of thana Raipur. 1,423 persons worked during the period from 15th January 1935 to 19th January 1935.
	Vishnupur ..	0·42	11½	11½	
9	Midnapore ..	0·67	13	13	Weather seasonable. Harvesting of winter paddy is complete. Fodder and water are sufficient.
	Contai ..	0·13	14	16	
	Tamluk ..	Nil	11	10½	
	Ghatal ..	0·50	11½	12½	
	Jhargram ..	0·98	12	13	
10	Hooghly ..	0·24	11	10½	Weather seasonable. Fodder and water are sufficient.
	Serampore ..	0·34	10	10	
	Arambagh ..	0·44	13	13	
11	Howrah ..	1·32	10	10	Weather cold; its effects are good. Fodder and water are sufficient.
	Uluberia ..	Nil	11	11½	
12	Rajshahi (Rampur Boalia).	Nil	12	12½	Weather seasonable and favourable to the crops. Harvesting of sugarcane continues. Fodder and water are sufficient.
	Naogaon ..	0·12	13	13	
	Nator ..	0·04	11½	12	
13	Dinajpur ..	Nil	15	15	Weather seasonable. Its effects on agricultural operations are favourable. Fodder and water are sufficient.
	Thakurgaon ..	Nil	15	15	
	Balurghat ..	Nil	13 4/15	13 4/15	
14	Jalpaiguri ..	Nil	14	14	Weather seasonable. Fodder and water are sufficient.
	Alipur ..	Nil	14	14	

Serial No.	District and subdivision.	Rainfall.	Price of common rice, in seers, per rupee.		Character of the weather, condition of crops, etc.
			This week.	Previous week.	
1	2	3	4	5	6
		Inches.			
15	Darjeeling ..	Nil	8	8	Weather favourable. Fodder and water are sufficient. Cattle-disease exists at places in Sadar subdivision.
	Kurseong ..	Nil	10	8	
	Siliguri ..	Nil	13	13	
	Kalimpong ..	0·10	7½	8	
16	Rangpur ..	Nil	13	13	Weather seasonable. Prospects of standing crops are fair. Harvesting of *rabi* crops continues. Fodder and water are sufficient.
	Nilphamari ..	(*n*)	(*n*)	13	
	Kurigram ..	Nil	12½	13	
	Gaibandha ..	0·06	12	12	
17	Bogra ..	0·14	14	14	The effect of weather on agricultural operation is fair. Condition of standing crops is fair. Fodder and water are sufficient.
18	Pabna ..	0·15	10½	10½	Weather cold. Condition of standing crops is satisfactory. Harvesting of mustard continues. Fodder and water are sufficient.
	Serajganj ..	0·08	10	10	
19	Malda ..	0·19	12½	13½	Weather seasonable. Prospects of standing crops are fair. Harvesting of mustard has commenced. Fodder and water are available.
20	Cooch-Behar ..	Nil	13 4/16	15½	Weather seasonable. Harvesting of winter paddy continues. Preparation of lands for jute and autumn paddy is in progress in places. Prospects and condition of standing crops are fair. Fodder and water are sufficient. Cattle-disease is reported from Mathabhanga police-station.
21	Dacca ..	0·04	11	12	Rainfall at North Sadar (Kapasia) 0·32. Weather cloudy for two days. Preparation of land for jute and paddy is going on. No large export or import. Prospects of crops are fair. Fodder and water are available.
	Manikganj ..	0·15	11½	11½	
	Narayanganj ..	0·05	11	10½	
	Munshiganj ..	Nil	12½	12½	

(*n*) Not reported.

Serial No.	District and sub-division.	Rainfall.	Price of common rice, in seers, per rupee.		Character of the weather, condition of crops, etc.
			This week.	Previous week.	
1	2	3	4	5	6
		Inches.			
22	Mymensingh ..	Nil	10½	11	Weather seasonable. Condition of crops is fair. Fodder and water are available.
	Jamalpur ..	Nil	12½	12½	
	Tangail ..	Nil	10½	10½	
	Netrakona ..	Nil	12	12	
	Kishorganj ..	Nil	11	11	
23	Faridpur ..	0·00	13	13	Weather seasonable. Condition of standing crops is fair. Fodder and water are sufficient.
	Goalundo (Rajbari).	0·25	10	10	
	Madaripur ..	0·00	13	13	
	Gopalganj (*a*) ..	0·00	14	14	
24	Bakarganj (Barisal).	Nil	13	13	Weather seasonable. Prospects of standing crops are good. Fodder and water are sufficient.
	Pirojpur ..	Nil	10½	10½	
	Patuakhali ..	Nil	12	12	
	Dakshin Shabazpur (Bhola).	Nil	13	13	
25	Chittagong ..	Nil	12 13*	12 13*	Weather seasonable. Transplantation of *rabi* crops is in progress. Prospects are fair. Fodder and water are sufficient. Panga salt sells at 13 seers per rupee at Sadar and 12 seers per rupee at Cox's Bazar.
	Cox's Bazar ..	Nil	13	13	
26	Tippera (Comilla)	Nil	13	12½	Prospects of crops are fair. Cattle-disease exists in places.
	Brahmanbaria ..	Nil	11	11½	
	Chandpur ..	Nil	13 1/16	13½	
27	Noakhali ..	Nil	14	13½	Weather seasonable. Condition of standing crops is fair. Fodder and water are sufficient.
	Feni ..	Nil	14	(*n*)	
28	Chittagong Hill Tracts.	Nil	17	16	Weather seasonable. Its effects on agricultural operations are favourable. Fodder and water are sufficient.
29	Tripura State ..	Nil	12½	13	Weather seasonable. Condition of cattle is good. Fodder and water are sufficient. Cotton sells at Rs. 8 to Rs. 15 and jute at Rs. 2-8 to Rs. 3-12 per maund.

(*n*) Not reported.

*(*a*) The rainfall at Haridaspur, which is very near to Gopalganj, is shown here.

* Burma rice.

J. C. BASU, for *Director of Agriculture, Bengal.*

Dacca, the 28th January 1935.

Wholesale prices-current of food grains, gur, etc., in the undermentioned marts of Bengal for the first half of January 1935.

Marts.	Paddy local (best quality).			Paddy local (common quality).			Rice local (best quality).		
	Present return.	Next preceding return.	Corresponding return of last year.	Present return.	Next preceding return.	Corresponding return of last year.	Present return.	Next preceding return.	Corresponding return of last year.
1	2	3	4	5	6	7	8	9	10
	Rs. a. p.	Rs. a. p.	Rs. a. p.	Rs. a. p.	Rs. a. p.	Rs. a. p.	Rs. a. p.	Rs. a. p.	Rs. a. p.
Calcutta	2 4 0	2 8 0	2 4 0	2 2 0	2 6 0	2 0 0	5 8 0	5 8 0	5 8 0
Burdwan	2 0 0	1 14 0	1 12 0	1 14 0	1 12 0	1 9 0	4 8 0	4 6 0	3 12 0
Midnapore	1 15 0	1 15 0	1 10 0	1 10 0	1 10 0	1 8 0	4 4 0	4 4 0	3 8 0
Chittagong	1 10 0	1 12 0	1 8 0	1 6 0	1 8 0	1 4 0	4 8 0	4 10 0	4 8 0
Dacca	2 4 0	2 6 0	2 0 0	2 0 0	2 0 0	1 12 0	3 12 0	3 12 0	3 8 0
Pabna	2 0 0	2 0 0	1 13 0	1 14 0	1 14 0	1 8 0	4 8 0	4 8 0	2 14 0
Rangpur	1 14 0	2 0 0	2 4 0	1 10 0	1 12 0	1 14 0	4 0 0	5 0 0	5 0 0
Serajganj (Pabna)	..	..	..	..	..	..	..	..	..
Sarisabari (Mymensingh)	..	..	..	..	..	..	..	..	..
Narayanganj (Dacca)	..	..	..	..	..	..	..	..	..

Marts.	Rice local (common quality).			Wheat.			Raw cotton.		
	Present return.	Next preceding return.	Corresponding return of last year.	Present return.	Next preceding return.	Corresponding return of last year.	Present return.	Next preceding return.	Corresponding return of last year.
	11	12	13	14	15	16	17	18	19
	Rs. a. p.	Rs. a. p.	Rs. a. p.	Rs. a. p.	Rs. a. p.	Rs. a. p.	Rs. a. p.	Rs. a. p.	Rs. a. p.
Calcutta	4 12 0	4 12 0	4 0 0	3 7 0	(n)	2 13 0	17 12 0	(n)	16 0 0
Burdwan	3 8 0	3 6 0	2 14 0	..	..	..	..	..	..
Midnapore	3 2 0	3 2 0	2 6 0	..	..	..	..	..	..
Chittagong	3 7 0	3 7 0	3 4 0	..	..	..	..	..	..
Dacca	3 2 0	3 0 0	3 2 0	..	..	..	..	..	..
Pabna	3 2 0	3 2 0	2 10 0	..	..	..	..	..	..
Rangpur	3 8 0	4 6 0	3 12 0	..	..	..	..	..	..
Serajganj (Pabna)	..	..	..	..	..	..	..	..	..
Sarisabari (Mymensingh)	..	..	..	..	..	..	..	..	..
Narayanganj (Dacca)	..	..	..	..	..	..	..	..	..

Marts.	Coal.			Raw jute (weighted average).			*Gur* (sugarcane).		
	Present return.	Next preceding return.	Corresponding return of last year.	Present return.	Next preceding return.	Corresponding return of last year.	Present return.	Next preceding return.	Corresponding return of last year.
	20	21	22	23	24	25	26	27	28
	Rs. a. p.	Rs. a. p.	Rs. a. p.	Rs. a. p.	Rs. a. p.	Rs. a. p.	Rs a. p.	Rs. p. a.	Rs. a. p.
Calcutta	0 6 6	0 6 6	0 6 6	5 0 0	4 9 0	4 9 3	4 12 0	4 0 0	4 8 0
Burdwan	..	..	..	..	..	..	4 8 0	4 8 0	5 8 0
Midnapore	..	..	..	..	..	..	4 8 0	4 8 0	3 6 0
Chittagong	..	..	..	..	..	..	7 12 0	8 0 0	5 8 0
Dacca	..	..	..	..	..	..	5 0 0	5 0 0	5 0 0
Pabna	..	..	..	..	..	..	4 0 0	4 0 0	3 4 0
Rangpur	..	..	..	..	..	..	4 0 0 to 5 4 0	4 0 0 to 5 4 0	4 0 0 to 4 8 0
Serajganj (Pabna)	..	..	..	4 0 0	3 13 0	3 7 6	..	..	..
Sarisabari (Mymensingh)	..	..	..	3 14 0 to 5 4 0	3 8 0 to 5 4 0	3 0 0 to 4 12 0	..	..	..
Narayanganj (Dacca)	..	..	..	4 0 0 to 5 0 0	3 10 0 to 4 12 0	3 0 0 to 4 8 0	..	..	..

(n) Not reported.

Dacca, the 24th January 1935.

J. C. BASU, for *Director of Agriculture, Bengal.*

Prices-current (retail) of common rice and salt in the districts of Bengal for the first half of January 1935.

Districts and Marts.	Quantity per rupee in seers of eighty tolas.								
	Common rice.						Salt.		
	Average.			Cheapest.					
	Present return.	Next preceding return.	Corresponding return of last year.	Present return.	Next preceding return.	Corresponding return of last year.	Present return.	Next preceding return.	Corresponding return of last year.
	S. Ch.	S. Ch.	S. Ch.	S. Ch.	S. Ch.	S. Ch.	S. Ch.	S. Ch.	S. Ch.
Presidency Division.									
24-Parganas—									
1 Chetla Hat ..	11 2	10 13	13 6	12 5	11 13	14 6	16 0	16 0	17 9
2 Mogra Hat ..	13 5	10 11 / (a) 14 9	(a) 13 14	(a) 15 4	11 13	(a) 16 0	16 0	16 0	16 0
3 Calcutta-Beliaghata	8 8	8 8	9 10	12 4	12 4	11 7	16 0	16 0	13 0
Nadia—									
4 Goari	11 0	10 10	13 0	13 0	13 4	(n)	14 0†	13 0†	13 0†
5 Ranaghat ..	10 0	10 0	11 8	13 0	13 0	(n)	14 0†	14 0†	13 0†
Murshidabad—									
6 Berhampore ..	11 8	11 0	15 0	12 0	12 0	16 8	14 0*	14 0*	14 0*
7 Kandi	12 8	11 8	16 0	13 0	12 0	16 8	14 0	14 0	14 8
8 Jangipur ..	11 12	11 8	16 0	12 4	12 8	17 0	15 0	15 0	16 0
Jessore—									
9 Sadar	13 0	11 0	13 0	14 0	12 0	14 8	15 0 / 14 8*	14 0†	14 0* / 15 0
10 Bongaon ..	10 0	10 0	11 0	12 8	12 8	13 0	14 8 / 13 0*	14 8 / 13 0*	13 8 / 12 8*
Khulna—									
11 Sadar	13 0	(a) 13 0	13 0	14 0	16 0	16 0	14 0†	13 0 / 12 0*	13 0†
12 Bagerhat ..	12 0	(a) 16 0	10 0	13 0	(a) 18 0	11 0	13 8	13 8	13 8
Burdwan Division.									—
Burdwan—									
13 Sadar	11 0	10 8	14 0	12 0	11 8	13 0	14 0†	14 0†	13 8 / 16 0*
14 Kalna	10 8	9 6	10 12	11 0	10 10	(a) 13 8	15 0†	16 0†	16 0
Birbhum—									
15 Suri	12 0	12 0	16 0	13 0	13 0	17 0	14 0	14 0	13 0
16 Rampurhat ..	10 0	10 0	(a) 17 0	13 0	11 0	(a) 18 0	16 0	16 0	16 0
Bankura—									
17 Sadar	12 0	12 8	15 0	12 8	14 0	16 0	14 0	14 0	14 0†
18 Vishnupur ..	10 8	10 0	(a) 15 0	11 8	11 0	(a) 18 0	13 0	13 0	13 0

* Karkach. (a) New. (n) Not reported.

N.B.—The prices of Karkach and Liverpool salt tally with each other in marts marked †.

Prices-current (retail) of common rice and salt in the districts of Bengal for the first half of January 1935.

Districts and Marts.	Quantity per rupee in seers of eighty tolas.								
	Common rice.						Salt.		
	Average.			Cheapest.					
	Present return.	Next preceding return.	Corresponding return of last year.	Present return.	Next preceding return.	Corresponding return of last year.	Present return.	Next preceding return.	Corresponding return of last year.
	S. Ch.	S. Ch.	S. Ch.	S. Ch.	S. Ch.	S. Ch.	S. Ch.	S. Ch.	S. Ch.
BURDWAN DIVISION—*concld.*									
Midnapore—									
19 Sadar	12 8	12 8	15 0	13 0	13 0	16 4	14 0	14 0	16 0
20 Contai	16 0	(a) 16 0	16 0	18 0	(a) 18 0	18 0	12 0	(b) 10 8	32 0
Hooghly—									
21 Sadar	11 0	11 0	13 8	13 0	13 0	16 0	15 0	14 0	15 0
22 Arambagh ..	13 0	11 8	(a) 16 12	13 8	12 8	(a) 17 0	14 8 14 0*	15 4 14 10*	14 8 14 0*
Howrah—									
23 Sadar	11 0	10 0	12 8	12 0	12 0	14 8	16 0	16 0	16 0
24 Uluberia ..	11 8	11 0	12 8	13 8	12 8	14 0	16 0	16 0	16 0
RAJSHAHI DIVISION.									
Rajshahi—									
25 Rampur-Boalia ..	12 12	12 0	12 8	13 0	13 0	16 0	13 4†	13 4†	13 8 13 0*
26 Nator	12 0	(a) 12 0	(n)	14 4	(a) 14 4	13 8	12 0†	12 0†	12 0†
27 Dinajpur—Railbazar Hat.	15 0	(a) 14 4	(n)	15 8	(a) 15 8	(n)	13 0†	13 0†	(n)
28 Jalpaiguri—Sadar ..	12 0	13 0	12 0	14 0	(a) 14 0	14 0	13 0	13 0	13 0
Darjeeling—									
29 Sadar	9 8	9 8	9 0	11 0	10 0	11 0	10 8 10 *	10 0 9 8*	10 0 8 0*
30 Siliguri ..	12 0	12 0	12 0	13 0	13 0	13 0	12 0†	12 0†	12 0†
Rangpur—									
31 Sadar	11 13	10 2	14 0	11 13	10 2	14 0	13 0	13 0	12 8
32 Nilphamari ..	10 0	10 0	(n)	12 0	12 0	13 0	12 8*	12 8*	12 8*
33 Bogra—Sadar ..	13 6	(a) 14 4	13 8	14 4	15 0	(a) 15 4	14 2	14 2	12 0
Pabna—									
34 Sadar	10 0	10 0	14 8	13 4	13 4	15 0	14 8†	14 8†	13 12†
35 Serajganj ..	11 4	10 0	11 12	11 12	11 8	13 0	16 0 15 0*	16 0 15 0*	16 0 15 0*
Malda—									
36 Sadar	13 0	(a) 13 0	16 0	14 0	(a) 14 8	16 8	14 8 14 0*	14 8 14 0*	14 8 13 8*
37 Balia—Nawabganj	14 8	(a) 14 5	17 4	15 0	(a) 15 0	18 0	14 8 14 0*	14 8 14 0*	15 0 14 0*

*Karkach. (n) Not reported.

N. B.—The prices of Karkach and Liverpool salt tally with each other in marts marked †.

(a) (New). (b) Owing to non-manufacture of country salt.

Prices-current (retail) of common rice and salt in the districts of Bengal for the first half of January 1935.

Districts and Marts.	Quantity per rupee in seers of eighty tolas.								
	Common rice.						Salt.		
	Average.			Cheapest.					
	Present return.	Next preceding return.	Corresponding return of last year.	Present return.	Next preceding return.	Corresponding return of last year.	Present return.	Next preceding return.	Corresponding return of last year.
	S. Ch.	S. Ch.	S. Ch.	S. Ch.	S. Ch.	S. Ch.	S. Ch.	S. Ch.	S. Ch.
Dacca Division.									
Dacca—									
38 Sadar	12 0	13 0	(a) 12 12	13 0	14 8	(a) 14 0	13 8†	12 8 13 0*	13 5 14 0*
39 Mirkadim ..	12 4	12 8	(a) 14 0	13 0	13 0	(n)	16 0*	15 0*	13 4*
Mymensingh—									
40 Nasirabad ..	12 0	11 8	10 0	13 4	13 4	12 0	12 12*	11 0*	12 8*
41 Netrakona ..	12 0	11 6	(n)	12 8	13 2	11 0	13 4 11 8*	13 5 11 6*	14 8 12 8*
Faridpur—									
42 Sadar ..	13 0	13 0	12 0	16 0	16 0	13 0	12 0	12 0	12 8
43 Rajbari ..	10 0	9 8	11 0	12 0	10 0	13 0	12 0	13 8	12 0
Bakarganj—									
44 Barisal ..	10 0	10 0	(a) 13 0	12 0	12 0	(a) 15 0	15 0†	15 0†	16 0 14 8*
45 Pirojpur ..	10 8	10 0	12 0	10 10	10 2	12 4	11 0†	11 0†	11 0†
Chittagong Division.									
Tippera—									
46 Comilla ..	10 0	10 11	(a) 12 5	12 5	14 9	(a) 13 5	12 13 10 10*	12 13 10 10*	12 13 10 10*
47 Chandpur ..	13 14	13 5	12 4	15 8	14 8	13 5	13 5	13 5	13 5
Noakhali—									
48 Kalitara Hat ..	10 0	10 0	11 8	13 0	13 8	14 0	13 0 11 0*	13 0 10 8*	13 0 10 0*
49 Feni Hat ..	(a) 13 12	10 12	13 0	14 0	12 13	14 0	13 0 10 0*	14 0 10 0*	14 0 10 0*
Chittagong—									
50 Sadar	11 8	11 0	10 0	13 0	12 8	14 0	13 0	13 0	16 0
51 Cox's Bazar ..	12 8	12 8	14 0	13 8	13 8	15 0	13 0	13 0	13 0
52 Chittagong Hill Tracts —Rangamati ..	14 0	12 0	14 0	15 0	13 0	18 0	13 0 8 0*	8 0* 13 0	6 8* 13 0

* Karkach. (a) New. (n) Not reported.

N, B.—The prices of Karkach and Liverpool salt tally with each other in marts marked †.

Dacca, the 24th January 1935. J. C. Basu, for *Director of Agriculture, Bengal.*

DEPARTMENT OF AGRICULTURE, BENGAL.

Dacca, the 24th January 1935.

Final Forecast of the Sugarcane Crop of Bengal, 1934-35.

(*Note.*—On an average of the five years ending 1932-33, the area under sugarcane in Bengal has represented some 7·2 per cent. of the total area under sugarcane in India.)

Character of the season.—The period covered by this forecast is that of the harvest during which pressing operation is being carried on favourably and a satisfactory outturn is anticipated for the province.

Acreage.—The total area planted is estimated at 276,200 acres this year as against 256,600 acres last year.

Outturn.—According to the estimates of the District Officers the average outturn of the crop for the province works out at 86 per cent. of the normal this year as against the same estimate last year.

Taking 56 2/5ths maunds as the normal yield of cane gur per acre, the gross outturn for the province is estimated at 492,100 tons this year as against 457,200 tons last year.

Other sources of gur.—The total quantity of gur likely to be obtained from datepalm juice and other sources is estimated at 99,800 tons this year as against 99,900 tons last year.

The quantity of gur for the province from all sources is thus estimated at 591,900 tons this year as against 557,100 tons last year.

K. McLEAN,

Director of Agriculture, Bengal (offg.).

APPENDIX I.

Final Forecast of the Sugarcane Crop of Bengal, 1934-35.

District.	Estimated normal area under sugarcane.	Estimated area under sugarcane.		Estimated outturn as a percentage of the normal yield per unit of area		Date by which the harvesting of the crop generally commenced this year, and whether that date was early, normal or late.	Remarks by District Officers.
		Last year.	This year.	Last year.	This year.		
1	2	3	4	5	6	7	8
	Acres.	Acres.	Acres.				
24-Parganas ..	3,300	2,500	2,700	83	75	December. Normal ..	The weather was fairly favourable on the whole.
Nadia ..	10,000	9,200	9,800	83	83	Will commence in 1st part of January.	The weather was favourable. Some damage was caused to the crop by flood. Hence the outturn is anticipated to fall below the normal.
Murshidabad ..	4,300	2,900	5,500	92	83	Lalbagh and Sadar—1st to 3rd week of December. Jangipur—Middle of November. Will commence from the beginning of February at Kandi.	The weather was favourable. Some damage was done to the crop by flood in Lalbagh and Jangipur subdivisions. Hence the outturn is expected to fall below the normal.
Jessore ..	2,500	3,200	3,200	75	70	November and December. Normal.	The weather was fair. Some damage was caused to the crop by flood. Hence the outturn is anticipated to fall below the normal.
Khulna ..	500	500	1,100	92	92	....	The weather was favourable.
Burdwan ..	11,600	7,200	7,500	100	92	....	Ditto.
Birbhum ..	9,100	8,600	8,800	92	83	January ..	Ditto.
Bankura ..	3,100	3,100	3,400	100	100	Not yet commenced ..	Ditto.
Midnapore ..	8,000	5,400	5,200	92	92	Between December and January.	Ditto
Hooghly ..	3,000	3,100	2,700	92	83	Not yet commenced ..	The weather was favourable but two annas damage was done in Arambagh due to drought and insects.
Howrah ..	3,800	4,000	2,500	83	83	End of January. Normal.	The weather was favourable.
Rajshahi ..	7,500	12,000	15,700	83	83	December. Normal ..	Some damage was caused by drought and insects. Hence the outturn is anticipated to fall below the normal.
Dinajpur ..	29,500	37,700	40,000	83	83	End of November ..	The weather since the submission of the second forecast was satisfactory.
Jalpaiguri ..	5,000	5,200	5,200	100	100	January. Normal ..	The weather was favourable.
Darjeeling ..	300	300	200	92	92	End of January. Normal	Ditto.
Rangpur ..	21,900	26,000	27,000	100	100	Middle of December. Normal.	The weather and its effects were favourable.
Bogra ..	4,000	6,000	7,000	90	90	....	The weather was favourable.
Pabna ..	4,000	4,400	4,300	75	100	Last week of December. Normal.	Ditto.
Malda ..	300	1,800	2,500	83	67	Middle of October. Normal.	The weather was fair. Much damage was done to the crop by flood.
Dacca ..	19,000	24,600	30,800	74	80	November. Normal ..	The weather was fairly favourable. Damage was done by flood.
Mymensingh ..	16,400	24,600	27,200	80	80	December. Normal ..	The weather was fairly favourable.
Faridpur ..	6,700	12,300	14,000	92	83	First week of October. Normal.	The outturn fell below the normal owing to damage caused by borer.
Bakarganj ..	18,200	42,000	40,000	83	92	September. Normal ..	Ditto.
Chittagong ..	6,000	6,000	6,000	100	80	October to February. Normal.	The weather was fairly favourable.
Tippera ..	900	1,300	1,300	92	83	November. Normal ..	The weather was favourable on the whole.
Noakhali ..	800	1,600	1,500	60	70	Ditto ..	The weather was fair.
Chittagong Hill Tracts.	1,100	1,100	1,100	70	70	Middle of December. Early.	Ditto.
Total Bengal	200,800	256,600	276,200	86	86		

APPENDIX II.

Abstract statement of estimated acreage and outturn of the Sugarcane Crop of Bengal, 1934-35.

Province.	Area (in acres).							Yield (in tons).						
	Of current year's crop.	Of previous year's crop.	Average of preceding—		Percentage by which column 2 exceeds (+), or is less than (−) area in—			Estimated yield of current year, i.e., of area in column 2.	Yield of previous year, i.e., of area in column 3.	Average of preceding—		Percentage by which column 7 exceeds (+), or is less than (−) yield in—		
					Column 3.	Column 4.						Column 8.	Column 9.	
1	2	3	4		5	6		7	8	9		10	11	
			Five years.	*Ten years.*		*Five years.*	*Ten years.*			*Five years.*	*Ten years.*		*Five years.*	*Ten years.*
Bengal	276,200	256,600	211,700	200,100	+8	+31	+32	492,100	457,200	282,200	253,400	+8	+74	+94

Statement of weekly gauge readings on the river Ganges at Rampur Boalia for the week ending the 19th January 1935.

Date.	Hour.	Height of surface above P. W. D. datum.	Height of surface above P. W. D. datum on the same date last year.	Remakrs.
1935.				Zero of gauge referred to B. M. on Rajshahi College step ; value 64·73.
13th January	7 a.m.	39·19	37·71	
14th „	7 „	39·14	37·61	
15th „	7 „	39·14	37·53	
16th „	7 „	39·09	37·68	Value of 0 of the gauge= 36·84 P. W. D.
17th „	7 „	39·09	37·63	
18th „	7 „	39·09	38·43	
19th „	7 „	39·04	38·63	

Highest recorded level on 26-8-1879=64·24.
Lowest recorded level on 24-4-1931=32·05.

S. M. HOSSAIN, for *Subdivisional Officer,*
Irrigation Department, Rajshahi.

Rampur Boalia, the 19th January 1935.

Statement showing the gauge readings at Dacca Waterworks Station on the river Buriganga for the week ending 19th January 1935.

Date.	At highest water.		At lowest water.		Commencement of—		Remarks.	
	Time.	Reading.	Time.	Reading.	Ebb tide.	Flow tide.	7 a.m.	5 p.m.
1935.								
13th January ..	..	..	12-25	3·2	..	12-35	4·2	4·0
14th ,, ..	7-10	4·5	13-15	2·9	7-17	13-27	4·45	3·7
15th ,, ..	8-0	4·4	14-5	2·8	8-10	14-15	4·2	3·4
16th ,, ..	8-50	4·3	14-55	2·7	9-0	15-6	3·95	3·25
17th ,, ..	9-40	4·45	15-45	2·85	9-50	15-55	4·0	3·1
18th ,, ..	10-30	4·2	16-35	2·6	10-40	16-45	3·6	3·7
19th ,, ..	11-20	4·0	17-25	2·4	11-30	17-33	3·0	2·5

B. M. on settling tank 39·49 O. M. S. L. Zero is at O. M. S. L.

Notable high and low water levels of previous years.

		Taken at high tide.			Taken at low tide.
27th August	1906 ..	70·5	23rd February	1907 ..	51·06
5th September	1909 ..	66·86	13th ,,	1908 ..	51·06
10th August	1910 ..	69·86	12th March	1912 ..	51·06
1st ,,	1911 ..	68·46	6th ,,	1914 ..	50·60
13th ,,	1912 ..	67·16	22nd February	1915 ..	50·30
31st ,,	1915 ..	69·7	15th ,,	1916 ..	50·60
8th ,,	1916 ..	68·1	3rd March	1917 ..	51·0
12th ,,	1917 ..	67·1	21st February	1918 ..	51·40
13th ,,	1918 ..	69·12	26th ,,	1919 ..	50·4
2nd ,,	1919 ..	66·8	18th ,,	1920 ..	50·9
8th September	1920 ..	66·9	19th ,,	1921 ..	50·9
28th July	1921 ..	68·4	8th March	1922 ..	51·05
10th August	1922 ..	68·00	14th ,,	1923 ..	50·8
31st July	1923 ..	66·15	16th February	1924 ..	50·50
29th August	1924 ..	68·82	5th March	1925 ..	50·9
8th September	1925 ..	68·52	9th February	1926 ..	2·2
15th August	1926 ..	19·6	27th ,,	1927 ..	2·10
17th September	1927 ..	18·70	16th ,,	1928 ..	2·2
22nd August	1928 ..	20·0	21st ,,	1929 ..	2·0
13th July	1929 ..	17·8	24th ,,	1930 ..	2·3
12th September	1930 ..	18·65	28th ,,	1931 ..	2·2
16th August	1931 ..	21·7	18th ,,	1932 ..	1·8
6th September	1932 ..	18·5	6th ,,	1933 ..	2·10
7th ,,	1933 ..	17·80	26th March	1934 ..	2·40
23rd August	1934 ..	19·35			

N.B.—Zero of the gauge at Dacca Waterworks prior to 11 a.m. on the 8th January 1926= −48·51 with reference to P. W. D. datum.

Zero of the gauge at Dacca Waterworks since 11 a.m. of the 8th January 1926=0·00 with reference to P. W. D. datum.

[ILLEGIBLE], *Executive Engineer,*
Khulna Division.

Khulna, the 26th January 1935.

Printed and published by the Superintendent, Government Printing, Bengal Government Press, Alipore, Bengal, on the 31st January 1935.

Registered No. C207

No. 6 of 1935

The Calcutta Gazette

Published by Authority

THURSDAY, FEBRUARY 7, 1935.

CONTENTS:

	PAGE.
PART I.—Orders and Notifications by the Governor of Bengal, the Government of Bengal, the High Court, Government Treasury, etc.	299—322
PART IA.—Orders and Notifications by the Government of India republished for general information	21—22
PART IB.—Educational Notices ..	279—305
PART II.—Advertisements	119—128
PART III.—Acts of the Bengal Legislative Council	*Nil*
PART IV.—Bills introduced in the Bengal Legislative Council, Reports of Select Committees presented or to be presented to that Council, and Bills published before introduction in that Council—	
Report of the Select Committee on the Bengal Village Self-Government (Amendment) Bill, 1934, with the Bill as amended by the Committee ..	17—35
PART V.—Acts of the Indian Legislature assented to by the Governor-General and Ordinances promulgated under section 72 of the Government of India Act ..	*Nil*
PART VI.—Bills introduced in the Council of State and Legislative Assembly, Reports of Select Committees presented to the Council and Assembly and Bills published under rule 18 of the Indian Legislative Rules	*Nil*
SUPPLEMENT No. 6 :—	
Cotton Ginning and Pressing—Monthly Return of Vital Statistics—Calcutta Improvement Trust Notices—Corporation of Calcutta Notice—Area leased for irrigation—Major and Minor Works and Navigation—Weekly Vital Statistics—Weekly Weather and Crop Report—Weekly gauge readings—River water-levels	215—236
Resolution on the Seventy-second Annual Report of the Government Cinchona Plantations and Factory in Bengal for the year 1933-34	237—238
Resolution under section 7 (2) of the Garden Reach Municipality Act, 1932	239—251

PART I

Orders and Notifications by the Governor of Bengal, the Government of Bengal, the High Court, Government Treasury, etc.

Orders by His Excellency the Governor of Bengal.

No. 1148A.—2nd February 1935.—Under the provisions of section 93 of the Government of India Act, His Excellency the Governor is pleased to accept the resignation tendered by Mr. J. M. Bottomley, I.E.S., of his office of member of the Bengal Legislative Council.

No. 1152A. — 2nd February 1935. — In exercise of the powers conferred by rule 26(2) of the Bengal Electoral Rules, His Excellency the Governor is pleased to nominate Mr. Apurva Kumar Chanda, I.E.S., an official, to be a member of the Bengal Legislative Council.

No. 1197A.—4th February 1935. — In exercise of the power conferred by sub-rule (3) (b) (ii) of rule 3 of the Bengal Electoral Rules, His Excellency the Governor is pleased to nominate Babu Guruprosad Das to be a member of the Bengal Legislative Council.

No. 1221A.—5th February 1935.—In exercise of the power conferred on him under clause (*b*) of the proviso to sub-section (*2*) of section 72A of the Government of India Act, His Excellency the Governor hereby nominates Babu Dhirendra Nath Mukherji, M.Sc., B.L., F.C.S., to be a member of the Bengal Legislative Council for the purpose of the Bengal Tobacco (Sales Licensing) Bill, 1935, with effect from this date until the conclusion of the proceedings in relation to the said Bill.

No. 1225A.—5th February 1935.—In exercise of the power conferred on him under clause (*b*) of the proviso to sub-section (*2*) of section 72A of the Government of India Act, His Excellency the Governor hereby nominates Mr. S. W. Redclift, M.I.E.E., M.I.E. (Ind.), to be a member of the Bengal Legislative Council for the purpose of the Bengal Electricity Duty Bill, 1935, with effect from this date until the conclusion of the proceedings in relation to the said Bill.

E. N. BLANDY,

Chief Secy. to the Govt. of Bengal (offg.).

Orders by the Government of Bengal.

No. 1208A.

Appointments and Transfers.

GENERAL.

Bakarganj - Dacca. — No. 781A. — 29th January 1935.—Babu Bisweswar Mazumdar, Subordinate Judge and Assistant Sessions Judge, Bakarganj, is appointed to act, until further orders, as an Additional District and Sessions Judge, Dacca.

24-Parganas-Chittagong Divn.—No. 995A. —30th January 1935.—Mr. Harold Graham, C.I.E., I.C.S., is appointed to be Magistrate and Collector, 24-Parganas, on being relieved of his appointment as officiating Commissioner of the Chittagong Division.

Bakarganj - Presidency Divn.—No. 1000A. —30th January 1935.—Mr. A. J. Dash, I.C.S., Magistrate and Collector, Bakarganj, is appointed temporarily to act as Commissioner of the Presidency Division.

Calcutta - Bakarganj. — No. 1005A.—30th January 1935.—Mr. H. Tufnell-Barrett, I.C.S., officiating Additional Deputy Secretary to the Government of Bengal in the Political Department, is appointed to act, until further orders, as Magistrate and Collector, Bakarganj.

Malda - Calcutta. — No. 1010A. — 30th January 1935.—Mr. Jatindra Nath Talukdar, I.C.S., officiating Magistrate and Collector, Malda, is appointed to act, until further orders, as Additional Deputy Secretary to the Government of Bengal in the Political Department.

Faridpur - Malda. — No. 1015A. — 30th January 1935.—Mr. Kanti Chandra Basak, I.C.S., officiating District and Sessions Judge, Faridpur, is appointed to act, until further orders, as Magistrate and Collector, Malda.

Faridpur-Khulna. — No. 1059A. — 31st January 1935.—Maulvi Ahmad Meah, Deputy Magistrate and Deputy Collector, Madaripur, Faridpur, is appointed to have charge of the Satkhira subdivision of the Khulna district.

Faridpur. — No. 1063A. — 31st January 1935.—Maulvi Dewan Naimul Haque, Deputy Magistrate and Deputy Collector, on leave, is posted to the Madaripur subdivision of the Faridpur district.

Bakarganj-24-Parganas. — No. 1067A. — 31st January 1935. — Babu Binay Bhusan Das Gupta, Deputy Magistrate and Deputy Collector, Patuakhali, Bakarganj, is transferred to the headquarters station of the 24-Parganas district.

Bakarganj. — No. 1071A. — 31st January 1935.—Babu Kshitish Chandra Chakrabatti, Deputy Magistrate and Deputy Collector, on leave, is posted to the Patuakhali subdivision of the Bakarganj district.

Dinajpur. — No. 1075A. — 31st January 1935.—Babu Mangal Kumar Acharji, Deputy Magistrate and Deputy Collector, on leave, is posted to the headquarters station of the Dinajpur district.

Dinajpur-Burdwan. — No. 1079A. — 31st January 1935.—Mr. Viresh Chandra Datta, Deputy Magistrate and Deputy Collector, Dinajpur, is transferred to the headquarters station of the Burdwan district.

Noakhali. — No. 1083A. — 31st January 1935. — Babu Anadi Ranjan Bose, Deputy Magistrate and Deputy Collector, on leave, is posted to the headquarters station of the Noakhali district.

Howrah.—No. 1087A. — 31st January 1935. —Maulvi Anwarul Haq, Deputy Magistrate and Deputy Collector, on leave, is posted to the headquarters station of the Howrah district.

Murshidabad.—No. 1129A.—1st February 1935.—Mr. A. Hughes, I.C.S., is appointed to act, until further orders, as Magistrate and Collector, Murshidabad.

POLICE.

No. 801A.—29th January 1935.—In supersession of the orders of the 23rd November 1934, the services of Major E. G. Johnson, I.A., are replaced at the disposal of the Government of India, Home Department, with effect from the 2nd February 1935.

Leave.

GENERAL.

Midnapore. — No. 733A. — 28th January 1935.—Maulvi Serajul Karim, Deputy Magistrate and Deputy Collector, Midnapore, is allowed leave on average pay for six weeks, under article 81 (*b*) (*ii*) of the Fundamental Rules, with effect from the 11th January 1935.

Dacca.—No. 736A.—28th January 1935.—Mr. B. C. Prance, I.C.S. (retired), Magistrate and Collector, Dacca, is allowed leave on average pay for two months and six days, under clause 11 (*a*) of his contract, with effect from the 27th February 1935, or any subsequent date on which he may be relieved.

24-Parganas. — No. 745A.—28th January 1935.—In modification of the orders of the 20th December 1934, Babu Sukesh Chandra Deb Ray, Deputy Magistrate and Deputy Collector, 24-Parganas, is allowed leave from the 22nd January 1935 to the 22nd December 1935, inclusive, viz., leave on average pay for four months, under rule 81 (*b*) (*ii*) of the Fundamental Rules, and leave on half average pay for the remaining period, under rule 81 (*d*) of those rules.

No. 749A.—29th January 1935.—Lieutenant E. W. H. Worrall, an Aide-de-Camp on the personal staff of His Excellency the Governor of Bengal, is allowed leave up to the 15th October 1935, viz., leave on average pay for three months and six days, under Fundamental Rule 100, with effect from the 15th February 1935, or any subsequent date on which he may avail himself of it, and furlough under the Military Rules for the remaining period.

Dacca.—No. 752A.—29th January 1935.—Mr. S. Drucquer, I.C.S., Assistant Magistrate and Collector, Dacca, was allowed leave not due, on half average pay for six days, under rule 81 (*c*) (*ii*) of the Fundamental Rules, with effect from the 9th December 1934.

Calcutta.—No. 788A.—29th January 1935.—Mr. N. G. A. Edgley, I.C.S., Secretary to the Government of Bengal in the Judicial Department and Superintendent and Remembrancer of Legal Affairs, Bengal, is allowed leave on average pay up to the 7th February 1935, under rule 81 (*b*) (*i*) of the Fundamental Rules, in extension of the leave granted to him under the orders of the 17th January 1935.

24-Parganas.—No. 1091A. — 31st January 1935.—Babu Satish Chandra Ghose, Deputy Magistrate and Deputy Collector, 24-Parganas, is allowed leave on average pay up to the 19th April 1935, under rule 81 (*b*) (*ii*) of the Fundamental Rules, with effect from the 16th February 1935, or any subsequent date on which he may avail himself of it.

Noakhali.—No. 1109A.—1st February 1935.—Babu Praphulla Chandra Ghosh, Deputy Magistrate and Deputy Collector, Noakhali, is allowed leave on average pay for two months, under rule 81 (*b*) (*ii*) of the Fundamental Rules, with effect from the date on which he may be relieved.

Khulna.—No. 1111A.—1st February 1935.—Babu Surendra Nath Sarkar, Deputy Magistrate and Deputy Collector, Satkhira, Khulna, is allowed leave on average pay for three months, under rule 81 (*b*) (*ii*) of the Fundamental Rules, with effect from the date on which he may be relieved.

Jessore.—No. 1115A.—1st February 1935.—The orders of the 26th December 1934, granting leave to Maulvi Din Muhammad, Sub-Deputy Collector, Bongaon, Jessore, are cancelled.

Murshidabad.—No. 1125A.—1st February 1935.—Mr. O. M. Rees, I.C.S. (retired), Magistrate and Collector, Murshidabad, is allowed leave on average pay for twenty-three days, under clause 11(*a*) of his contract, with effect from the 7th February 1935.

POLICE.

Dacca.—No. 715A.—26th January 1935.—Mr. J. R. Johnson, I.P. Superintendent of River Police, Narayanganj, Dacca, is allowed leave for one year, viz., leave on average pay for eight months, under rule 81 (*b*) (*i*) of the Fundamental Rules, with effect from the 1st February 1935 or any subsequent date on which he may avail himself of it, and leave on half average pay for the remaining period, under rule 81 (*d*) of those rules.

E. N. BLANDY,

Chief Secy. to the Govt. of Bengal (offg.).

POLITICAL DEPARTMENT.

Political.

NOTIFICATIONS.

No. 1126P. — 1st February 1935. — In exercise of the power conferred by sub-section (*5*) of section 11 of the Port Haj Committees Act, 1932 (Act XX of 1932), the Governor in Council is pleased to notify that Khan Bahadur Muhammad Abdul Momin, C.I.E., M.L.C., has been elected Chairman of the Port Haj Committee of Calcutta.

No. 2854Pub.—2nd February 1935. — In exercise of the power conferred by section 19 of the Indian Press (Emergency Powers) Act, 1931 (XXIII of 1931), the Governor in Council is pleased to declare all copies, wherever found, of a book in English entitled "Lenin—God of the Godless" by Ferdinand Ossendowski, printed by Richard Clay and Sons, Limited, Bungay, Suffolk, Great Britain, and published by Constable and Company, Limited, from London, W.C. 2, to be forfeited to His Majesty, on the ground that it appears to the Governor in Council that the said book contains words of the nature described in clause (*d*) of sub-section (*1*) of section 4 of the said Act.

No. 1259P.—4th February 1935.—In exercise of the powers conferred by section 12 of the Indian Territorial Force Act, 1920 (XLVIII of 1920), the Governor in Council is pleased to appoint Mr. A. J. Dash, I.C.S., to be a member of the Provincial Advisory Committee, Indian Territorial Force, constituted in notification No. 4641P., dated the 21st April 1933, *vice* Mr. H. J. Twynam, C.I.E., I.C.S., resigned.

Mr. A. J. Dash is hereby appointed to be the President of the said Committee.

Calcutta.—No. 1264P.—4th February 1935.—In pursuance of sub-section (*2*) of section 28 of the Auxiliary Force Act, 1920 (XLIX of 1920), and in partial modification of Political Department notification No. 4194P., dated the 10th April 1934, the Governor in Council is pleased to appoint Mr. A. J. Dash, I.C.S., to be a member of the Advisory Committee for the Calcutta Military area, *vice* Mr. H. J. Twynam, C.I.E., I.C.S., resigned. He will hold office up to the 31st March 1935.

E. N. BLANDY,
Chief Secy. to the Govt. of Bengal (offg.).

Special.

NOTIFICATION.

No. 2488X.—7th February 1935.—Whereas in the opinion of the Government of Bengal there are reasonable grounds for believing that Babu Bimal Ranjan Chatarji *alias* Bocha, son of Babu Kshitendra Daman Chatarji, of village Kanakshar, police-station Lohaganj, in the district of Dacca, and of Paharpur, Dinajpur town, police-station Kotwali, district Dinajpur, is a person in respect of whom an order may lawfully be made under sub-section (*1*) of section 2 of the Bengal Criminal Law Amendment Act, 1930; and

Whereas the Governor in Council on the 3rd December 1934 in exercise of the powers conferred by the said section 2 was pleased to order the said Babu Bimal Ranjan Chatarji *alias* Bocha to be committed to custody in the nearest District or Central Jail, and the arrest without warrant of the said Babu Bimal Ranjan Chatarji *alias* Bocha at any place where he might be found by any police officer with view to his commitment to custody; and

Whereas the said Babu Bimal Ranjan Chatarji *alias* Bocha has not been arrested and the said order under section 2 of the said Act has not been served personally on the said person, and whereas due diligence has in the opinion of the Local Government been exercised to effect such personal service;

Now, therefore, the Governor in Council in exercise of the powers conferred by sub-section (*2*) of section 3 of the Bengal Criminal Law Amendment Act, 1930, is pleased to direct the said Babu Bimal Ranjan Chatarji *alias* Bocha, son of Babu Kshitendra Daman Chatarji, of village Kanakshar, police-station Lohaganj, in the district of Dacca, and of Paharpur, Dinajpur town, police-station Kotwali, district Dinajpur, to appear before the Superintendent of Police, Dinajpur, at Dinajpur town, within 15 days of this date for the purpose of receiving the aforesaid order.

S. N. ROY,
Addl. Secy. to the Govt. of Bengal.

Jails.

NOTIFICATIONS.

Calcutta. — No. 354P.J. — 29th January 1935.—Rai Sahib Jnanendra Chandra Guha, Personal Assistant to the Inspector-General of Prisons, Bengal, is allowed leave on average pay for four months, under rule 81 (*b*) (*ii*) of the Fundamental Rules, with effect from the 6th February 1935, or any subsequent date on which he may avail himself of it.

Calcutta.—No. 357P.J.—29th January 1935.—Maulvi Kazi Abdul Moujud, M.A., an Assistant of the Judicial Department of the Secretariat, is appointed to act as Personal Assistant to the Inspector-General of Prisons, Bengal, during the absence, on leave, of Rai Sahib Jnanendra Chandra Guha.

Darjeeling. — No. 389P.J.—31st January 1935.—In exercise of the powers conferred by section 5 of the Scheduled Districts Act, 1874 (XIV of 1874), and paragraph 2 of the Government of India notification No. 2G., dated the 3rd January 1921, the Governor in Council is pleased to extend the provisions of the Bengal Borstal Schools Act, 1928 (Bengal Act I of 1928), to the district of Darjeeling.

Rajshahi.—No. 430P.J.—2nd February 1935.—Mr. Chas. A. W. Luke, lately officiating Superintendent, Rajshahi Central Jail, has been granted by the High Commissioner for India an extension of special disability leave on half average pay for four months from the 27th September 1934, under rule 83 (*7*) (*b*) of the Fundamental Rules, and in continuation leave not due on half average pay for one month and twenty-eight days, under rule 81 (*c*) (*i*) of those rules.

2. This cancels notification No. 4019P.J., dated the 17th December 1934, published at page 1986 of Part I of the *Calcutta Gazette*, dated the 27th idem.

E. N. BLANDY,
Chief Secy. to the Govt. of Bengal (offg.).

Orders by the Inspector-General of Prisons, Bengal.

No. 2053. — 1st February 1935. — Dr. Madhusudan Mukherjee made over charge of the Jessore Jail to Dr. Surendra Nath Sen Gupta on the forenoon of the 1st January 1935.

R. E. FLOWERDEW, LT.-COL., I.M.S.,
Inspector-General of Prisons, Bengal.

JUDICIAL DEPARTMENT.

Appointments and Transfers.

24-Parganas.—No. 814J. — 22nd January 1935.—In exercise of the powers conferred by sections 14 and 15 of the Code of Criminal Procedure, 1898 (Act V of 1898), the Governor in Council is pleased—

(*a*) to confer upon Mr. James Gordon the powers of a Magistrate of the third class, in the district of the 24-Parganas, for a period of three years from the date of this notification, and

(*b*) to direct him to sit as a member of the Garulia bench in the said district.

Birbhum - Calcutta. — No. 762J. — 28th January 1935.—The services of Babu Hari Charan Ghosh, munsif of Rampurhat, in the district of Birbhum, are placed at the disposal of the Hon'ble the Chief Justice of Bengal for appointment as Assistant Registrar (III) of the High Court, Appellate Side, Calcutta.

Birbhum.—No. 763J.—28th January 1935. —Maulvi Syed Alla Hafez, officiating additional munsif of Rampurhat, in the district of Birbhum, is appointed to act, until further orders, as a munsif in the said district, to be ordinarily stationed at Rampurhat, *vice* Babu Hari Charan Ghosh.

Tippera.—No. 806J.—29th January 1935.— Babu Dhirendra Nath Guha, munsif of Comilla, in the district of Tippera, is appointed temporarily to act as Subordinate Judge in the said district, *vice* Babu Raman Chandra Banarji.

Burdwan.—No. 812J.—29th January 1935. —In exercise of the powers conferred by sections 14 and 15 and the proviso to section 357 of the Code of Criminal Procedure, 1898 (Act V of 1898), the Governor in Council is pleased—

(*a*) to confer upon Babu Santi Mohan Ghosh the powers of a Magistrate of the third class, in the district of Burdwan, for a period of three years from the 30th January 1935,

(*b*) to direct him to sit as a member of the Raniganj bench in the said district, and

(*c*) to direct him to take down evidence in the English language.

Hooghly.—No. 817J.—30th January 1935. —In exercise of the powers conferred by sections 14 and 15 and the proviso to section 357 of the Code of Criminal Procedure, 1898 (Act V of 1898), the Governor in Council is pleased—

(*a*) to confer upon Mr. Kanai Lal Banarji, M.B.E., the powers of a Magistrate of the first class, in the district of Hooghly, for a period of three years from the 23rd February 1935, in respect to such cases as may be made over to him within the limits of the Serampore subdivision of the said district,

(*b*) to direct that he shall, in addition to sitting singly, sit as a member of the Serampore bench in the said district, and

(*c*) to direct him to take down evidence in the English language.

Murshidabad.—No. 896J. — 1st February 1935.—In exercise of the powers conferred by sections 14 and 15 and the proviso to section 357 of the Code of Criminal Procedure, 1898 (Act V of 1898), the Governor in Council is pleased—

(*a*) to confer upon Rai Ramani Mohan Sen Bahadur the powers of a Magistrate of the first class, in the district of Murshidabad, for a period of three years from the date of this notification, in respect to such cases as may be made over to him within the limits of the Sadar subdivision of the said district,

(*b*) to direct that he shall, in addition to sitting singly, sit as a member of the Berhampore bench in the said district, and

(*c*) to direct him to take down evidence in the English language.

Hooghly.—No. 961J.—2nd February 1935. —In exercise of the powers conferred by sections 14 and 15 and the proviso to section 357 of the Code of Criminal Procedure, 1898 (Act V of 1898), the Governor in Council is pleased—

(*a*) to confer upon Babu Manmohan Sinha Ray the powers of a Magistrate of the third class, in the district of Hooghly, for a period of three years from the date of this notification,

(*b*) to direct him to sit as a member of the Sadar bench in the said district, and

(*c*) to direct him to take down evidence in the English language.

Leave.

No. 772J.—26th January 1935.—Maulvi Hasibuddin Ahmad, Subordinate Judge, is allowed leave on half average pay up to the 28th February 1935, under Fundamental Rule 81 (*d*), in extension of the leave already granted to him.

Rangpur.—No. 963J.—2nd February 1935. —Babu Sharat Chandra De, Subordinate Judge and Assistant Sessions Judge, Rangpur, is allowed privilege leave on full pay for eleven days from the 4th February 1935, under the amendment to article 271 of the Civil Service Regulations.

Resignation.

Hooghly.—No. 959J.—2nd February 1935.—The Governor in Council is pleased to accept the resignation tendered by Babu Prasad Das Mallik of his appointment as an Honorary Magistrate of the Sadar bench in the district of Hooghly.

NOTIFICATIONS.

Howrah.—No. 791J.—29th January 1935.—In exercise of the power conferred by section 65 of the Bengal Village Self-Government Act, 1919 (Bengal Act V of 1919), the Governor in Council is pleased to appoint Babu Gostha Behari Ghosh, a member of the Jhorhat union board within the Sankrail police-station in the Sadar subdivision of the Howrah district, to be, during his term of office as such member, a member of the union bench within the jusridiction of the said union board for the purposes of that section, *vice* Babu Kishori Mohan Pal, resigned.

Howrah.—No. 792J.—29th January 1935.—In exercise of the power conferred by section 73 of the Bengal Village Self-Government Act, 1919 (Bengal Act V of 1919), the Governor in Council is pleased to appoint Babu Gostha Behari Ghosh, a member of the Jhorhat union board within the Sankrail police-station in the Sadar subdivision of the Howrah district, to be, during his term of office as such member, a member of the union court within the jurisdiction of the said union board for the purposes of that section, *vice* Babu Kishori Mohan Pal, resigned.

Noakhali.—No. 828J.—30th January 1935.—In exercise of the power conferred by section 73 of the Bengal Village Self-Government Act, 1919 (Bengal Act V of 1919), the Governor in Council is pleased to appoint Babu Radha Mohan Chakrabatti, a member of the Mahamaya union board within the Chhagalnaya police-station in the Feni subdivision of the Noakhali district, to be, during his term of office as such member, a member of the union court within the jurisdiction of the said union board for the purposes of that section, *vice* Babu Madhab Chandra Chakrabatti, deceased.

Noakhali.—No. 867J.—31st January 1935.—In exercise of the power conferred by section 65 of the Bengal Village Self-Government Act, 1919 (Bengal Act V of 1919), the Governor in Council is pleased to appoint Munshi Abdul Bari Chaudhuri, a member of the Parashuram union board No. 2 within the Parashuram police-station in the Feni subdivision of the Noakhali district, to be, during his term of office as such member, a member of the union bench within the jurisdiction of the said union board for the purposes of that section, *vice* Munshi Ali Ahmed Chaudhuri, deceased.

Noakhali.—No. 885J. — 31st January 1935.—In exercise of the power conferred by section 65 of the Bengal Village Self-Government Act, 1919 (Bengal Act V of 1919), the Governor in Council is pleased to appoint Munshi Abdul Kader Chaudhuri, a member of the Munshirhat union board within the Chhagalnaiya police-station in the Feni subdivision of the Noakhali district, to be, during his term of office as such member, a member of the union bench within the jurisdiction of the said union board for the purposes of that section, *vice* Munshi Bazaler Rahman Chaudhuri, deceased.

Noakhali.—No. 886J.—31st January 1935.—In exercise of the power conferred by section 73 of the Bengal Village Self-Government Act, 1919 (Bengal Act V of 1919), the Governor in Council is pleased to appoint Munshi Abdul Kader Chaudhuri, a member of the Munshirhat union board within the Chhagalnaiya police-station in the Feni subdivision of the Noakhali district, to be, during his term of office as such member, a member of the union court within the jurisdiction of the said union board for the purposes of that section, *vice* Munshi Bazaler Rahman Chaudhuri, deceased.

Tippera.—No. 970J.—2nd February 1935.—In exercise of the power conferred by section 65 of the Bengal Village Self-Government Act, 1919 (Bengal Act V of 1919), the Governor in Council is pleased to appoint Maulvi Syed Abdur Rashid Chaudhuri, a member of the Rupsa union board No. VIII within the Faridganj police-station in the Chandpur subdivision of the Tippera district, to be, during his term of office as such member, a member of the union bench within the jurisdiction of the said union board for the purposes of that section, *vice* Khan Sahib Maulvi Syed Habibulla, deceased.

Tippera.—No. 971J.—2nd February 1935.—In exercise of the power conferred by section 73 of the Bengal Village Self-Government Act, 1919 (Bengal Act V of 1919), the Governor in Council is pleased to appoint Maulvi Syed Abdur Rashid Chaudhuri, a member of the Rupsa union board No. VIII within the Faridganj police-station in the Chandpur subdivision of the Tippera district, to be, during his term of office as such member, a member of the union court within the jurisdiction of the said union board for the purposes of that section, *vice* Khan Sahib Maulvi Syed Habibulla, deceased.

T. J. Y. ROXBURGH,

Secy. to the Govt. of Bengal (offg.).

LOCAL SELF-GOVERNMENT DEPARTMENT.

NOTIFICATIONS.

Minister-in-charge: The Hon'ble Sir Bijoy Prasad Singh Roy, Kt.

24-Parganas.—No. 832M.—1st February 1935.—In exercise of the power conferred by section 8 of the Garden Reach Municipality Act, 1932 (Bengal Act III of 1932), the Government of Bengal (Ministry of Local Self-Government) are pleased to constitute the Garden Reach area in the district of the 24-Parganas as a Municipality for the purposes of the Bengal Municipal Act, 1932, with effect from the 1st April 1935.

2. The name of the said Municipality shall be the Garden Reach Municipality, the number of Commissioners of the Municipality shall be twenty, and the boundaries of the Municipality shall be as follows:—

Boundaries.

Starting from a point where the western boundary of the Port Commissioners' land meets the river Hooghly and thence going southward along the western boundary of the said land and along the eastern edge of Prince Dilwarjah lane to a point where it meets the Garden Reach Road; thence eastward along the northern edge of Garden Reach Road in its end where it meets the Port Commissioners' land and thence southward along the western boundary of the Port Commissioners' land to the point where it meets Circular Garden Reach Road; thence westward along the northern edge of the Circular Garden Reach Road to the point where it meets the junction of new Taratala Road and Circular Garden Reach Road; thence along the northern, western and southern boundaries of the Port Commissioners' land above referred to where it meets the north-eastern boundary of village Ramdashati; thence along the northern boundaries of villages Ramdashati, Makhalhati, Panchur, Jagananth Nagar and Akra as delineated in the survey map of the district settlement operation, till it meets the river Hooghly; thence northward and eastward along the river Hooghly to the western terminus of the Port Commissioners' land.

24-Parganas.—No. 892M.—4th February 1935.—In exercise of the power conferred by section 9 of the Garden Reach Municipality Act, 1932 (Bengal Act III of 1932), the Government of Bengal (Ministry of Local Self-Government) are pleased to appoint the following gentlemen to be the first Commissioners of the Garden Reach Municipality in the district of the 24-Parganas:—

(1) Mr. H. Wallace.
(2) Mr. S. Border.
(3) Mr. M. Dalmiya.
(4) Mr. F. Law.
(5) Mr. J. T. Davies.
(6) Haji Raisuddin.
(7) The Subdivisional Officer, Sadar, Alipore (*ex-officio*).
(8) Babu Surendra Nath Das.
(9) Mr. Unsud Dowla.
(10) Maulvi Ishaque Ali Mirza.
(11) Maulvi Muhammada Hossen.
(12) Maulvi Abdul Khabir.
(13) Haji Hafiz Aminuddin.
(14) Safdar Jah Zahid Ali Mirza.
(15) Babu Abinash Chandra Pal.
(16) Babu Gobinda Chandra Bhattacharyya.
(17) Dr. H. P. Neogi.
(18) Mr. J. N. Choudhury.
(19) Babu Sudhir Chandra Pal.
(20) Mr. R. F. Meff.

2. Under section 9 of the said Act the Government of Bengal (Ministry of Local Self-Government), are also pleased to appoint Mr. H. Wallace to be the Chairman of the aforesaid Municipality.

Pabna. — No. 709M. — 26th January 1935.—The following draft of a set of by-laws, which has been framed by the Commissioners of the Pabna Municipality, in the district of Pabna, under section 355 of the Bengal Municipal Act, 1932 (Bengal Act XV of 1932), and which the Government of Bengal (Ministry of Local Self-Government) propose to confirm under section 506 of the Act, is published for the information of persons likely to be affected thereby.

2. The draft will be taken into consideration on the 1st April 1935, and any objection or suggestion received by the undersigned through the District Magistrate and the Divisional Commissioner before that date will be duly considered:—

Draft by-laws.

By-laws regulating the use of, and prevention of nuisance in regard to, public water-supply, bathing and washing places, streams, channels, tanks and wells.

Definition.

1. In these by-laws the word "channel" shall include "*nala*," "river," "stream," "ditch," or "watercourse."

Penalty.

2. *Fines.*—The penalty for the infringement of any of these by-laws shall be—

(*a*) a fine not exceeding the sum stated at the foot of the by-law,

(*b*) in the case of a second or subsequent conviction for a similar offence, a fine not exceeding the sum (if any) stated in that behalf at the foot of the by-law, and

(*c*) in the case of a continuing offence, a further fine not exceeding the sum (if any) stated at the foot of the by-law as the daily fine, which daily fine may be imposed for each day after written notice of the offence from the Commissioners.

3. *Setting up obstruction.*—No person shall, without the general or special permission of the Commissioners, set up any obstruction in any channel which is a source of public water-supply.

Explanation.—The spreading of fishing-nets and the placing of fishing-traps in any such channel are included in the word "obstruction" as used in this by-law.

Fine, Rs. 10; daily fine, Rs. 2.

4. *Easing oneself.*—No person shall ease himself at the side of or into any channel.

Fine, Rs. 10.

5. *Throwing rubbish, sewage or offensive matter.*—No person shall throw, deposit or discharge any rubbish, sewage or offensive matter into any channel, tank or well.

Fine, Rs. 10; on a second or subsequent conviction, Rs. 50.

6. *Cleanliness of banks, and access for conservancy.*—Every owner or occupier of any part of the bank of any channel which is a source of public water-supply shall—

(*a*) keep such bank free from filth, dense vegetation and other obstruction, and

(*b*) at all times allow the Commissioners, or any of their servants duly authorized in this behalf, to have access to such channel for any purpose of public conservancy.

Fine, Rs. 10.

7. *Weeds.*—Any person taking weeds from a channel or tank shall completely remove them from the slope and crest of such channel or tank within three days.

Fine, Rs. 10; daily fine, Rs. 2.

8. *Masonry platforms and drains for wells.*—The owner of every well which is a source of public water-supply shall construct a masonry platform and drains to prevent the surface water falling into the well or stagnating in its vicinity.

Fine, Rs. 10; daily fine, Rs. 2.

9. *Bathing or washing near well or standpipe.*—No person shall bathe, or shall wash clothes, utensils or any other article, within a distance of ten feet from the lowest platform of any well, pump, standpipe or hydrant.

Fine, Rs. 10.

10. *Use of standpipes and fountains.*—Except with the general or special permission of the Commissioners and under such conditions as they may from time to time prescribe, no person shall use any standpipe, pump, hydrant or fountain belonging to the Commissioners for any purpose other than drawing water—

(*a*) for drinking on the spot, or

(*b*) for carrying away for domestic purposes.

Fine, Rs. 10.

11. No person shall put his mouth to any tap or cock attached to any standpipe or hydrant used by the public.

Fine, Rs. 10.

12. No person shall cause damage to any hydrant, standpipe, pump, fountain, water-tap or cock belonging to the Commissioners or tamper with any of their property connected with the waterworks in such a manner as to affect the use of public water-supply.

Fine Rs. 20.

13. No person suffering from leprosy or any other contagious disease shall touch or draw water from any standpipe used by the public.

Fine, Rs. 20.

14. *Steeping jute, hemp, etc.*—No person shall, without the general or special permission of the Commissioners, steep in any tank or channel any jute, hemp or other vegetable matter which is likely to render the water offensive or noxious to the neighbourhood.

Fine, Rs. 10; on a second or subsequent conviction, Rs. 50.

15. *Washing infected articles.*—No person shall wash or cause to be washed in or near any tank or channel or any other receptacle for water used by the public for drinking or bathing purposes any clothes, bedding or other articles which have been used by a person suffering from any infectious or contagious disease.

Fine, Rs. 50.

16. *Bathing by infected persons.*—No person suffering from any infectious or contagious disease shall bathe in any public bathing place.

Fine, Rs. 10.

17. *Bathing places reserved for females.*—No male person above twelve years of age shall stand on or near, or bathe or wash in, any bathing place which has been reserved by the Commissioners at a meeting for the use of females only.

Fine, Rs. 10.

18. *Cattle troughs.*—No person shall use for any other purpose any drinking trough which has been reserved by the Commissioners for watering cattle.

Tippera. — No. 770L.S.-G.—29th January 1935.—In exercise of the power conferred by section 3 of the Bengal Motor Vehicles Tax Act, 1932 (Bengal Act I of 1932), the Government of Bengal (Ministry of Local Self-Government) are pleased to appoint the Additional District Magistrate of Tippera to be the Taxing Officer for the district of Tippera and are pleased to specify the district as the area within which he shall exercise the powers and perform the duties imposed on the Taxing Officer by or under the said Act.

2. This cancels so much of notification No. 1661L.S.-G., dated the 6th April 1932, as relates to the district of Tippera.

Hooghly.—No. 795M.—31st January 1935. —The following draft of a set of by-laws, which has been framed by the Commissioners of the Baidyabati Municipality, in the district of Hooghly, under section 463 of the Bengal Municipal Act, 1932 (Bengal Act XV of 1932), and which the Government of Bengal (Ministry of Local Self-Government) propose to confirm under section 506 of the Act, is published for the information of persons likely to be affected thereby.

2. The draft will be taken into consideration on the 15th April 1935, and any objection or suggestion received by the undersigned through the District Magistrate and the Divisional Commissioner before that date will be duly considered:—

Draft by-laws.

1. The owner of any land or building in the municipality shall give notice in writing to the Commissioners of any alteration in the boundary of such land, or of the erection of any new building thereon, or of any material alteration or addition to any building owned by him, within one month of such erection, addition or alteration.

Fine, Rs. 25.

2. The owner of any land or building in the municipality shall, on a notice from the Commissioners, erect conspicuous boundary marks of such materials and dimensions as may be prescribed by the Municipal Commissioners, clearly defining the limits of all lands owned by him which form separate holdings:

Provided that on the joint request of owners of adjoining plots, the Municipal Commissioners may allow joint boundary marks.

Fine, Rs. 25.

3. The owner of any land or building in the municipality, who has erected boundary marks under by-law 2, shall, on a notice from the Municipal Commissioners, replace or repair any boundary mark which is defective.

Fine, Rs. 25.

Nadia.—No. 797M.—31st January 1935. — The following draft of a set of by-laws, which has been framed by the Commissioners of the Nabadwip Municipality, in the district of Nadia, under section 463 of the Bengal Municipal Act, 1932 (Bengal Act XV of 1932), and which the Government of Bengal (Ministry of Local Self-Government) propose to confirm under section 506 of the Act, is published for the information of persons likely to be affected thereby.

2. The draft will be taken into consideration on the 15th April 1935, and any objection or suggestion received by the undersigned through the District Magistrate and the Divisional Commissioner before that date will be duly considered:—

Draft by-laws.

1. The owner of any land or building in the municipality shall give notice in writing

to the Commissioners of any alteration in the boundary of such land, or of the erection of any new building thereon, or of any material alteration or addition to any building owned by him, within one month of such erection, addition or alteration.

Fine, Rs. 25.

2. The owner of any land or building in the municipality shall, on a notice from the Commissioners, erect conspicuous boundary marks of such materials and dimensions as may be prescribed by the Municipal Commissioners, clearly defining the limits of all lands owned by him which form separate holdings:

Provided that on the joint request of owners of adjoining plots, the Municipal Commissioners may allow joint boundary marks.

Fine, Rs. 25.

3. The owner of any land or building in the municipality, who has erected boundary marks under by-law 2, shall, on a notice from the Municipal Commissioners, replace or repair any boundary mark which is defective.

Fine, Rs. 25.

No. 800L.S.-G.—31st January 1935. — The following draft of amendments, which, in exercise of the power confererd by clause (*a*) of the Bengal Local Self-Government Act, 1885 (Bengal Act III of 1885), the Government of Bengal (Ministry of Local Self-Government) propose to make in the rules published with notification, dated the 15th December 1885, as subsequently amended, is published for the information of persons likely to be affected thereby.

2. The draft will be taken into consideration on or after the 15th April 1935, and any suggestion or objection received by the undersigned, through the District Magistrates, before that date will be duly considered:—

Draft amendments.

1. In the penultimate sentence of rule 29, *after* the words "ten electors" *insert* the words "whose names appear, on the date on which the nomination is sent, in the register of voters."

2. At the end of rule 29, *add* the following, namely—

"And no nomination shall be held to be valid unless the nomination form is properly filled in."

3. In column 4 of the Form appended to rule 29, after the words "Number in voters' register" *add* the words "if any."

4. In the *Explanation* appended to rule 29,—

(*a*) *insert* the words "within the thana" after the words "president panchayat" and

(*b*) *for* the words "the thana" in the last line *read* "that thana."

Medical.

Minister-in-charge: The Hon'ble Sir Bijoy Prasad Singh Roy, Kt.

Chittagong Hill Tracts. — No. 344Medl. — 31st January 1935.—Dr. Benode Behari Hazra, officiating Civil Surgeon, Chittagong Hill Tracts, is granted leave on average pay for ninety days, under rule 81 (*b*) (*ii*) of the Fundamental Rules, with effect from the 2nd February 1935 or from the date of relief.

Chittagong Hill Tracts.—No. 345Medl. — 31st January 1935.—Dr. Narendra Nath Ghosh, on the expiry of his leave, is reappointed as officiating Civil Surgeon, Chittagong Hill Tracts, *vice* Dr. Benode Behari Hazra.

Calcutta-Noakhali.—No. 348Medl. — 31st January 1935.—Dr. Nasimuddin Sarkar, House Physician to the Professor of Clinical Medicine, Medical College Hospitals, Calcutta, is posted to the Sadar Hospital, Noakhali, *vice* Dr. Manindra Priya Talukdar.

Noakhali-Calcutta.—No. 349Medl. — 31st January 1935.—Dr. Manindra Priya Talukdar of the Sadar Hospital, Noakhali, on relief, is appointed to act as House Physician, Carmichael Hospital for Tropical Diseases, Calcutta, *vice* temporary Assistant Surgeon Dr. Ansaruddin Chowdhury.

Calcutta.—No. 350Medl. — 31st January 1935.—Temporary Assistant Surgeon, Dr. Ansaruddin Chowdhury, House Physician, Carmichael Hospital for Tropical Diseases, Calcutta, on relief, is appointed as House Physician to the Professor of Clinical Medicine, Medical College Hospitals, Calcutta, *vice* Dr. Nasinuddin Sarkar.

Calcutta-Howrah. — No. 364Medl. — 29th January 1935. — Dr. Jyoti Prosad Mitra, on supernumerary duty at the Medical College Hospitals, Calcutta, is appointed to act, until further orders, as 1st Resident Assistant Surgeon of the Howrah General Hospital, *vice* Dr. Bankim Chandra Banerjee, deceased.

NOTIFICATIONS.

No. 383Medl.—4th February 1935.—In exercise of the powers conferred by article 6 of the Statutes of the State Medical Faculty of Bengal, the Governor in Council is pleased to make the following amendment to the regulations for the Licentiateship Examination of the Faculty, issued under notification No. 424Medl., dated the 2nd March 1915, as subsequently amended, viz.—

Delete the "exception" after clause (*a*) of rule 1 of the rules for the Primary Examination for a Licentiate of the State Medical Faculty which was inserted under addendum No. 256T.Medl., dated the 25th June 1915.

2. These orders will take effect from the session beginning in July 1936.

Chittagong.—No. 361Medl. — 31st January 1935.—To rule 3 of the rules for the Compounders' Class at the Government Medical Schools in Bengal, published under notification No. 2823Medl., dated the 22nd November 1929, *add* the following after Lytton Medical School, Mymensingh:—

"Chittagong Medical School ... 6"

G. S. DUTT,
Secy. to the Govt. of Bengal.

Public Health.

NOTIFICATIONS.

Minister-in-charge: The Hon'ble Sir Bijoy Prasad Singh Roy, Kt.

Dacca.—No. 201P.H.—31st January 1935.—The following draft of an additional rule, which, in exercise of the power conferred by section 311 of the Bengal Municipal Act, 1932 (Bengal Act XV of 1932), the Government of Bengal (Ministry of Public Health) propose to make in the house connection rules of the Narayanganj Municipality, which were published under notification No. 488M., dated the 18th February 1914, as subsequently amended, is published for the information of persons likely to be affected thereby.

2. The draft will be taken into consideration on or after the 30th March 1935, and any objection or suggestion received by the undersigned before that date will be duly considered:—

Draft rule.

19A. No cistern, tank or reservoir of any description, which is intended to be supplied with water from the municipal waterworks, shall be permitted to any holding except with the sanction of the Commissioners in meeting, and such sanction shall distinctly specify the dimensions and capacity of the cistern, tank or reservoir allowed. The inlet to every such cistern, tank or reservoir must be controlled by an efficient ballcock so that the discharge thereinto is completely stopped when the cistern, tank or reservoir is full. The ballcock, cistern and taps fed from it will count together as one tap for the purpose of rule 19.

Jalpaiguri.—No. 206P.H. — 1st February 1935.—The following draft of amendments, which, in exercise of the power conferred by section 311 of the Bengal Municipal Act, 1932 (Bengal Act XV of 1932), the Government of Bengal (Ministry of Public Health) propose to make in the house connection rules of the Jalpaiguri Municipality, which were published under notification No. 2241P.H., dated the 9th October 1934, is published for the information of persons likely to be affected thereby.

2. The draft will be taken into consideration on or after the 8th April 1935, and any objection or suggestion received by the undersigned before that date will be duly considered:—

(*a*) *Additional Rule.—Insert* the following rule after rule 10, namely:—

10A. If additional water is required over and above the supply of water referred to in rule 10, requisition shall be made for the same to the Commissioners in Form C. The requisition shall be for a period of not less than one year, and payment shall be made in advance for the whole year at the rate of one pie per 10 gallons of additional water per day requisitioned.

When the above conditions have been complied with, the Commissioners shall have the house connection adjusted so as to enable the additional water to be supplied, the adjustment of the connection and the payment being based on the particulars furnished by the applicant in Form C.

Form "C".

To
The Chairman of the Commisioners of
Municipality.

The annual valuation of my/our holding is Rs. , I/we have/have not a first class/second class sewer connection, and according to rule 10 I am entitled to
gallons of water per day.

I require my connection to be adjusted so as to admit an additional
gallons of water per day to my tank, for at least 12 calendar months from (date)
for which I herewith remit the sum of Rs.
being the payment in accordance with rule 10A.

Signature———————

Address———————

(*b*) *Add* the following at the end of rule 3 of the rules:—

"and combination of holdings for the purpose of these rules shall not be allowed."

H. R. WILKINSON,
Secy. to the Govt. of Bengal.

EDUCATION DEPARTMENT.

NOTIFICATIONS.

No. 524Edn. — 4th February 1935. — In exercise of the power conferred by section 6, sub-section (*1*), clause (*c*), and section 10 of the Indian Universities Act, 1904 (VIII of 1904), as amended by the Calcutta University Act, 1921 (VII of 1921), His Excellency the Chancellor of the Calcutta University is pleased to re-nominate Mr. R. Wolfenden, M.B.E., M.SC., M.I. Mech. E., M.I.E. (Ind.), Bar.-at-Law, to be an Ordinary Fellow of the University.

Minister-in-charge: The Hon'ble Khan Bahadur M. Azizul Haque.

Dacca - Rangpur. — No. 408Edn. — 29th January 1935.—Mr. Abdur Razzaq, officiating Lecturer, Teachers' Training College, Dacca, is appointed to the Bengal Educational Service as Superintendent, Rangpur Normal School, with effect from the date on which he joins the appointment, *vice* Dr. Nagendra Mohan Gupta, retired.

Birbhum-Nadia. — No. 436Edn. — 31st January 1935.—Babu Kshirode Chandra Sen Gupta, District Inspector of School, Birbhum, is appointed as District Inspector of Schools, Nadia, with effect from the 2nd March 1935, or any subsequent date on which he joins the appointment on the expiry of his leave, *vice* Babu Jyotish Chandra Sikdar, transferred.

Nadia-Birbhum. — No. 437Edn. — 31st January 1935.—Babu Jyotish Chandra Sikdar, District Inspector of Schools, Nadia, is appointed as District Inspector of Schools, Birbhum, with effect from the date on which he joins the appointment, *vice* Babu Kshirode Chandra Sen Gupta, transferred.

Calcutta.—No. 480Edn. — 31st January 1935.—Babu Ashutos Maitra, Demonstrator of Chemistry, Presidency College, Calcutta, acted as Professor of Chemistry in the same College, on his own pay in the Bengal Educational Service, for the period from 31st November to 22nd December 1934, *vice* Dr. Panchanan Neogi, on leave.

Calcutta.—No. 481Edn. — 31st January 1935. — Babu Nani Gopal Chakravarty, Demonstrator in Chemistry, Presidency College, Calcutta, in the Subordinate Educational Service, acted in the Bengal Educational Service for the period from 21st November to 22nd December 1934, both days inclusive, *vice* Babu Ashutos Maitra, on deputation.

Chittagong.—No. 485Edn.—31st January 1935.—The Government of Bengal (Ministry of Education) are pleased to appoint the following members to constitute the Governing Body of the Chittagong College:—

(1) The Commissioner of the Chittagong Division, President (*ex-officio*).

(2) The Principal, Chittagong College, Vice-President and Secretary (*ex-officio*).

(3) Khan Sahib Maulvi A. M. Muhammad Asad, M.A., Principal, Chittagong Madrasah (offg.).

(4) Rai Upendra Lal Ray Bahadur, B.L., Chittagong.

(5) Mr. J. K. Ghoshal, Bar.-at-Law, Chittagong.

(6) Mr. Anwarul-Azim, M.A. (Cantab.), Bar-at-Law, M.L.A.

(7) Maulvi Abdul Khaleque, B.L., Chittagong.

(8) and (9). Two elected representatives of the teaching staff approved by the Director of Public Instruction, Bengal.

2. The two elected representatives of the teaching staff will hold office for the academic session 1935-36, and the rest will hold office for three academic sessions from 1935-36.

Rangpur. — No. 502Edn. — 2nd February 1935.—Maulvi Muhammad Moazzam Hosain, Assistant Superintendent, Rangpur Normal School, is appointed to act in the Bengal Educational Service as Superintendent of the said school, with effect from the 16th May 1934, the date on which he assumed the duties of the post till the appointment of a successor to Dr. Nagendra Mohan Gupta, retired.

Howrah. — No. 510Edn. — 2nd February 1935.—Mr. Abul Mohsin Ahmed is appointed to the Bengal Educational Service as Assistant Professor of Mechanical Engineering in the Bengal Engineering College with effect from the 28th November 1934, the date on which he joined the appointment, *vice* Babu Purna Chandra Ganguli, retired.

Khulna-Bakarganj. — No. 516Edn. — 4th February 1935.—Khan Sahib Maulvi Serajuddin Ahmed, Headmaster, Khulna Zilla School, is appointed as Headmaster, Barisal Zilla School, with effect from the 1st February 1935, or any subsequent date on which he joins the appointment, *vice* Babu Dwijendra Mohan Sen Gupta, retired.

Bakarganj-24-Parganas.— No. 517Edn. — 4th February 1935.—Maulvi Sayeedul Hasan, Headmaster, Jhalakati Government High School, is apointed as Headmaster, Baraset Government High School, with effect from the date on which he joins the appointment, *vice* Mr. Abdur Rezzak, transferred.

Darjeeling-Khulna. — No. 518Edn. — 4th February 1935.—Mr. Charu Chandra Nandi, Assistant Headmaster, Darjeeling High School, is appointed to act in the Bengal Educational Service, until further orders, as Headmaster, Khulna Zilla School, with effect from the 1st February 1935, or any subsequent date on which he joins the appointment, *vice* Khan Sahib Maulvi Serajuddin Ahmed, transferred.

Howrah-Bakarganj.— No. 519Edn. — 4th February 1935.—Babu Panchanan Bhattacharji, Assistant Headmaster, Howrah Zilla School, is appointed to act in the Bengal Educational Service, until further orders, as Headmaster, Bhola Government High School, with effect from the date on which he joins the appointment, *vice* Mr. Abdur Rahim, transferred.

Dacca-Bakarganj. — No. 520Edn. — 4th February 1935.—Maulvi Abdur Razzak Choudhury, Assistant Headmaster, Dacca Collegiate School, is appointed to act in the Bengal Educational Service as Headmaster, Jhalakati Government High School, with effect from the date on which he joins the apointment, or until further orders.

Registration.

NOTIFICATIONS.

Minister-in-charge: The Hon'ble Khan Bahadur M. Azizul Haque.

24-Parganas.—No. 140Regn.—31st January 1935.—It is notified for general information that the Government of Bengal (Ministry of Education), are pleased to sanction the retention for a further period of one year, with effect from the 29th January 1935, of the office of the Joint Sub-Registrar of Joynagar at Dakshin Barasat in the district of the 24-Parganas.

Jessore.—No. 142Regn. — 2nd February 1935.—In exercise of the power conferred by section 3 of the Bengal Muhammadan Marriages and Divorces Registration Act, 1876 (Bengal Act I of 1876), the Government of Bengal (Ministry of Education) are pleased to appoint Maulvi Kazi Abdul Motaleb temporarily to be a Muhammadan Registrar within the police-station of Bongaon, in the district of Jessore, during the absence, on leave, of Maulvi Saiyid Wajed Ali, or until further orders.

Jessore.—No. 143Regn. — 2nd February 1935.—In exercise of the power conferred by section 2 of the Kazis' Act, 1880 (Act XII of 1880), the Government of Bengal (Ministry of Education) are pleased to appoint Maulvi Kazi Abdul Motaleb temporarily to be the Kazi for the celebration of marriages and the performance of other rites and ceremonies within the police-station of Bongaon, in the district of Jessore, during the absence, on leave, of Maulvi Saiyid Wajed Ali, or until further orders.

Chittagong.—No. 148Regn.—4th February 1935.—Maulvi Abdul Latif Khan, District Sub-Registrar of Chittagong, is allowed leave on average pay for fifteen days from the 11th February 1935, under rule 86 (*b*) of the Fundamental Rules.

Bakarganj.—No. 153Regn.—4th February 1935.—It is notified for general information that the Government of Bengal (Ministry of Education) are pleased to sanction the retention for a further period of one year with effect from the 1st February 1935 of the office of the Joint Sub-Registrar of Amtoli at Barguna in the district of Bakarganj.

H. R. WILKINSON,
Secy. to the Govt. of Bengal.

Orders by the Director of Public Instruction, Bengal.

Bengal Educational Service.

Jalpaiguri - Midnapore. — No. 5-B.—18th January 1935.—Mr. Manmatha Nath Kar, Subdivisional Inspector of Schools, Jalpaiguri, now officiating District Inspector of Schools, Midnapore, in the Bengal Educational Service, is granted leave on average pay for thirty days from 2nd January 1935, under Fundamental Rule 81 (*b*) (*ii*).

2. He is permitted to prefix to his leave Sunday, the 23rd December 1934, the Christmas and the New Year's Day holidays extending from 24th December 1934 to 1st January 1935, provided the conditions prescribed in Subsidiary Rules 206 to 208 are fulfilled.

Chittagong Divn.—No. 6-B.—21st January 1935.—Maulvi Md. Basheer Hosain, officiating Assistant Inspector of Schools for Muhammadan Education, Chittagong Division, in the Bengal Educational Service, is declared, in terms of Fundamental Rule 81 (*b*) (*ii*), to have been on leave on average pay for twelve days from 11th December 1934.

2. He was permitted to suffix to the leave Sunday, the 23rd December 1934, the Christmas and the New Year's Day holidays extending from 24th December 1934 to 1st January 1935, provided the conditions prescribed in Subsidiary Rules 206 to 208 were fulfilled.

3. This cancels this office notification No. 77-B., dated 11th December 1934, granting Maulvi Md. Basheer Hosain leave for ten days from 13th December 1934.

Jessore.—No. 8-B.—22nd January 1935.—Babu Tulsidas Banerji, Headmaster, Jessore Zilla School, in the Bengal Educational Service, is granted leave for four months from 20th January 1935, or any subsequent date on which he avails himself of it, viz., leave on average pay for such period which together with the summer vacation of the school should not exceed four months, under Fundamental Rules 81 (*b*) (*ii*) and 82 (*b*), and leave on half average pay for the remaining period, under Fundamental Rule 81 (*d*).

2. He is permitted to suffix to his leave the summer vacation of the Jessore Zilla School for 1935, under Fundamental Rule 82 (*d*).

J. M. BOTTOMLEY,
Director of Public Instruction, Bengal.

Orders by the Inspector-General of Registration, Bengal.

24-Parganas.—No. 21.—26th January 1935.—Babu Khitish Chandra Gupta, Sub-Registrar of Baduria, in the district of the 24-Parganas, is allowed leave on average pay for one day, under rule 81 (*b*) (*ii*) of the Fundamental Rules, in extension of the leave granted to him in this department notification No. 592, dated the 5th December 1934.

Jessore. — No. 22.—28th January 1935.—Babu Sudhir Chandra Mitra, Sub-Registrar of Monirampur, in the district of Jessore, is allowed leave on average pay for fifteen days, under rule 81 (*b*) (*ii*) of the Fundamental Rules, with effect from the 22nd January 1935.

This cancels this department notification No. 7, dated the 14th January 1935, granting leave for one month to the Sub-Registrar from the 2nd January 1935.

24-Parganas.—No. 23.—28th January 1935.—Maulvi Abul Fazl, Sub-Registrar of Bhangore, in the district of the 24-Parganas, was on leave on average pay for three days, under rule 81 (*b*) (*ii*) of the Fundamental Rules, with effect from the 13th December 1934.

Tippera.—No. 24.—28th January 1935.—Babu Jitendra Kumar Banarji, Sub-Registrar of Chandpur, in the district of Tippera, is allowed leave on average pay for two months and twenty-two days, under rule 81 (*b*) (*ii*) of the Fundamental Rules, from the 1st October 1934 to the 22nd December 1934 (both days inclusive).

This cancels this department notification Nos. 177 and 605, dated the 1st and 11th December 1934, respectively.

Jessore.—No. 25.—28th January 1935.—Babu Jitendra Kumar Mitra, Sub-Registrar of Sripur, in the district of Jessore, is allowed leave on half average pay for one day, under rule 81 (*d*) of the Fundamental Rules, in extension of the leave granted to him in this department notification No. 556, dated the 21st November 1934.

Bogra.—No. 26.—28th January 1935.—Maulvi Najmul Huda, officiating Sub-Registrar of Khetlal, in the district of Bogra, is allowed leave on average pay for four days, under rule 81 (*b*) (*ii*) of the Fundamental Rules, with effect from the 11th February 1935.

Chittagong.—No. 27.—28th January 1935.—Babu Nalin Chandra Das, Sub-Registrar of Hathazari, in the district of Chittagong, was on leave on average pay for twenty days, under rule 81 (*b*) (*ii*) of the Fundamental Rules, with effect from the 2nd December 1934.

This cancels this department notification No. 540, dated the 12th November 1934, granting him leave on average pay for three weeks, with effect from the 19th November 1934.

Chittagong.—No. 28.—28th January 1935.—This department notification No. 541, dated the 12th November 1934, appointing Maulvi Shamsul Huda, Sub-Registrar attached to Chittagong, to act as Sub-Registrar of Hathazari in the same district is cancelled.

Rangpur.—No. 29.—30th January 1935.—Babu Ramesh Chandra Ghosh, Sadar Joint Sub-Registrar of Rangpur, is allowed leave on average pay for four days, under rule 81 (*b*) (*ii*) of the Fundamental Rules, with effect from the 2nd January 1935.

Dacca-Bakarganj.—No. 30.—2nd February 1935.—Babu Sukhamay Ray, Sub-Registrar attached to Dacca, officiating as Sub-Registrar of Bakarganj (Sahibganj), in the district of Bakarganj, is posted temporarily to the Sadar Registration office at Barisal, Bakarganj, with effect from the 2nd January 1935.

Bakarganj.—No. 31.—2nd February 1935.—Babu Sukhamay Ray, Sub-Registrar attached to Barisal, Bakarganj, is appointed to act as Sub-Registrar of Nalchiti in the same district, with effect from the 9th January 1935, during the absence, on leave, of the permanent incumbent, or until further orders.

Rangpur.—No. 32.—2nd February 1935.—Maulvi Muhammad Halimuzzaman, Sub-Registrar of Bharatkhali, in the district of Rangpur, is allowed leave on average pay for six days, under rule 81 (*b*) (*ii*) of the Fundamental Rules, with effect from the 11th February 1935.

S. AHMED,
Inspector-General of Regn., Bengal.

FINANCE DEPARTMENT.

Audit.

NOTIFICATION.

No. 974F.—31st January 1935.—In exercise of the powers conferred by rules 41, 42 and 44 of the Civil Services (Classification, Control and Appeal) Rules, and with the previous sanction of the Governor-General in Council as required by rule 11 of these rules, the Governor in Council and acting with his Ministers is pleased to direct that the following amendment shall be made in the Contributory Provident Fund Rules (Bengal), namely:—

Amendment.

Under sub-rule (*1*) of rule 14 of the said rules, the following shall be inserted as an exception:—

"*Exception.*—In the case of typists and copyists who are remunerated at piece-rates, the amount of any instalment shall be limited to the number of whole rupees which, on deduction from his emoluments for the full month in question, will leave a cash balance payable to the subscriber of not less than Rs. 25.

D. GLADDING,
Secy. to the Govt. of Bengal.

COMMERCE DEPARTMENT.

NOTIFICATIONS.

No. 702Com.—1st February 1935. — Mr. T. B. Glover, Inspector of Factories, Bengal, is allowed leave on average pay for eight months, under rule 81 (*b*) (*i*) of the Fundamental Rules, with effect from the 1st April 1935, or any subsequent date from which he may avail himself of it.

No. 722Com.—4th February 1935.—Mr. Kally Coomar Dutt, Assistant Registrar of Joint Stock Companies, Bengal, is allowed leave on average pay for two months, under rule 81 (*b*) (*ii*) of the Fundamental Rules, with effect from the 2nd February 1935.

No. 726Com.—4th February 1935.—Babu Sachindra Nath Banerjee, M.A., B.COM., G.D.A., R.A., is appointed temporarily to act as Assistant Registrar for the Presidency of Bengal, under the Indian Companies Act, 1913 (VII of 1913), the Provident Insurance Societies Act, 1912 (V of 1912), and the Indian Life Assurance Companies Act, 1912 (VI of 1912), during the absence, on leave, of Mr. Kally Coomar Dutt, or until further orders.

D. GLADDING,
Secy. to the Govt. of Bengal.

DEPARTMENT OF AGRICULTURE AND INDUSTRIES.

Industries.

NOTIFICATION.

Minister-in-charge: The Hon'ble Nawab K. G. M. Faroqui, Khan Bahadur.

Faridpur. — No. 699Ind. — 29th January 1935.—The orders issued with this department resolution No. 3755Ind. of the 9th August 1934, granting a loan of Rs. 500, under the Bengal State Aid to Industries Act, 1931, to Babu Tarakeswar Bhattacharjee for the establishment of an umbrella factory at Faridpur are hereby cancelled.

J. D. V. HODGE,

Secy. to the Govt. of Bengal.

REVENUE DEPARTMENT.

Land Revenue.

NOTIFICATIONS.

Noakhali. — No. 991L.R.—16th January 1935.—Maulvi Shamsul Abedin, Sub-Deputy Collector and Khas Mahal Officer, Noakhali, is allowed leave on average pay for three months, with effect from the 10th January 1935 or any subsequent date on which he is relieved, under the proviso to rule 81 (*b*) (*ii*) of the Fundamental Rules.

Noakhali. — No. 996L.R.—16th January 1935.—Babu Jogesh Chandra Chakrabatty, Sub-Deputy Collector and Assistant Settlement Officer, Noakhali, is appointed, in addition to his settlement duties, to be the Khas Mahal Officer of that district, in place of Maulvi Shamsul Abedin, Sub-Deputy Collector and Khas Mahal Officer, on leave, for a period of three months, with effect from the 10th January 1935, or any subsequent date on which he relieves the present incumbent.

Rangpur - Nadia-Murshidabad-Rajshahi.—No. 2077L.R.—2nd February 1935.—Babu Satyendra Nath Banarji, Sub-Deputy Collector, Rangpur, is, in the interest of public service, appointed to be an Assistant Settlement Officer in the districts of Nadia, Murshidabad and Rajshahi, with effect from the date on which he joins his settlement duties in those districts.

Nadia - Murshidabad-Rajshahi.—No. 2078-L.R.—2nd February 1935.—Under the provisions of section 3 (*14*) of the Bengal Tenancy Act, 1885 (Act VIII of 1885), Babu Satyendra Nath Banarji, Sub-Deputy Collector, is authorised to discharge, in the districts of Nadia, Murshidabad and Rajshahi, the functions of a Revenue Officer, under Chapter X of that Act, so far as they relate to surveys and the preparation of record-of-rights.

He is also vested with the powers of an Assistant Settlement Officer, under Chapter VII, Part I, of the rules under the Bengal Tenancy Act in respect of the aforesaid areas.

ERRATUM.

Nadia. — No. 2070L.R. — 2nd February 1935.—In notification Nos. 10305L.R. and 10307L.R., dated the 20th September 1934, published at pages 1397-98 and 1398-99 respectively of Part I of the *Calcutta Gazette* of the 27th idem, in respect of survey and preparation of record-of-rights of certain Government and temporarily-settled private estates of the Nadia Collectorate, *for* the figure 870 under No. of estate against serial No. 116 *read* 873.

Land Acquisition.

NOTIFICATIONS.

Dacca.—No. 2074L.A. — 2nd February 1935.—Whereas it appears to the Governor in Council that additional land is likely to be required to be taken by Government at the expense of the Dacca district board for a public purpose, viz., for the improvement of the Dacca-Narayanganj Road from the 2nd to the 9th mile, it is hereby notified that for the above purpose pieces of lands altogether measuring, more or less, 0·99 of an acre and comprising part of cadastral survey plot No. 1390 of mauza Jurain, jurisdiction list No. 337, parts of cadastral survey plots Nos. 9, 12, 13, 15, 189, 188 and 602 of mauza Kadamtali, jurisdiction list No. 334, pargana Shibpur Shyampur, police-station Tejgaon, parts of cadastral survey plots Nos. 671, 672 and 673 of mauza Dapa Idrakpur, jurisdiction list No. 154, pargana Jahangirnagar, parts of cadastral survey plots Nos. 955, 956, 5, 31 and 28 of mauza Fatulla, jurisdiction list No. 158, pargana Kashimnagar Tappa Fatullapur, police-station Fatulla and part of cadastral survey plot No. 407 of mauza Khanpur within the Narayanganj Municipality, are likely to be required within the aforesaid villages of Jurain, Kadamtali, Dapa Idrakpur, Fatulla and Khanpur in the district of Dacca.

This notification is made, under the provisions of section 4 of Act I of 1894, to all whom it may concern.

A plan of the land may be inspected in the office of the Collector of Dacca.

In exercise of the powers conferred by the aforesaid section the Governor in Council is pleased to authorise the officers for the time being engaged in the undertaking, with their servnts and workmen, to enter upon and survey the land and do all other acts required or permitted by that section.

Any person interested in the above land, who has any objection to the acquisition thereof, may, within thirty days after the date on which public notice of the substance of this notification is given in the locality, file an objection in writing before the Collector of Dacca.

Howrah. — No. 2086L.A.—4th February 1935.—Whereas it appears to the Governor in Council that land is likely to be required to be taken by Government at the expense of the National Iron Steel Company, Limited, for constructing mill, cooly line, staff quarters, school and dispensary, etc., of the National Iron Steel Company, Limited, in the village of Bali, jurisdiction list No. 1, thana Bali, pargana Boro, district Howrah, it is hereby notified that for the above purpose a piece of land measuring, more or less, 28·2533 acres, bounded on the—

North—By Bali-Sapuipara Road, lands of Abinash Mondal, Sagar Mondal and others, Uday Manna, Tulsi Ghose, East Indian Railway, land and garden land of Sukdeo Marwari and Sarat Banduri,

East—By East Indian Railway fencing, lands of Sagar Mondal and others, Uday Manna and Tulsi Ghose,

South—By Chandmari Road (Belur Range), garden land of Sukdeo Marwari, lands of Abinash Mondal, Krishna Gopal Bihani and Golam Mistry,

West—By lands of Abinash Mondal, Sagar Mondal and others, Hira Lal Marwari, Purna Chandra Ghose, Krishna Gopal Bihani, Prosad Dalui, Golam Mistry, Subdar Ali and garden land of Sukdeo Marwari,

is likely to be required within the aforesaid village of Bali.

This notification is made, under the provisions of section 4 of Act I of 1894, to all whom it may concern.

A plan of the land may be inspected in the office of the Collector of Howrah.

In exercise of the powers conferred by the aforesaid section, the Governor in Council is pleased to authorise the officers for the time being engaged in the undertaking, with their servants and workmen, to enter upon and survey the land and do all other acts required or permitted by that section.

Any person interested in the above land, who has any objection to the acquisition thereof, may, within thirty days after the date on which public notice of the substance of this notification is given in the locality, file an objection in writing before the Collector of Howrah.

Calcutta. — No. 2096L.A.—4th February 1935.—The Governor in Council is pleased to cancel the notification No. 12666L.A., dated the 1st November 1930, published under section 4 of the Land Acquisition Act, I of 1894, at pages 1723-24, Part I of the *Calcutta Gazette* of the 6th idem, in respect of the proposed acquisition of 4·7107 acres of land required by the Corporation of Calcutta for the extension of the Muhammadan burial ground at Tiljala in ward No. 18 of the Calcutta Municipality in the city of Calcutta.

Calcutta. — No. 2149L.A.—4th February 1935.—Whereas it appears to the Governor in Council that land is likely to be required to be taken by Government at the expense of the Corporation of Calcutta for a public purpose, viz., for the construction of a bathing platform in Convent Lane in ward No. 19 in the city of Calcutta, it is hereby notified that for the above purpose a piece of land comprising a portion of premises No. 4, Convent Lane, and measuring, more or less, 0·0127 of an acre, bounded on the—

North—By Convent Lane,

East and South—By the remaining portion of premises No. 4, Convent Lane,

West—By premises No. 6, Convent Lane,

is likely to be required within the aforesaid ward No. 19 of the Calcutta Municipality in the city of Calcutta.

This notification is made, under the provisions of section 4 of Act I of 1894, to all whom it may concern.

A plan of the land may be inspected in the office of the Second Land Acquisition Collector, at No. 5, Bankshall Street, Calcutta.

In exercise of the powers conferred by the aforesaid section, the Governor in Council is pleased to authorise the officers for the time being engaged in the undertaking, with their servants and workmen, to enter upon and survey the land and do all other acts required or permitted by that section.

Any person interested in the above land, who has any objection to the acquisition thereof, may, within thirty days after the date on which public notice of the substance of this notification is given in the locality, file an objection in writing before the Second Land Acquisition Collector, Calcutta.

DECLARATIONS.

Howrah.—No. 2063L.A. — 2nd February 1935.—Whereas it appears to the Governor in Council that land is required to be taken by Government at the expense of the Howrah Municipality for a public purpose, viz., for opening out road off Bajalpara Lane, in the village of Salkia, pargana Paikan, zilla

Howrah, it is hereby declared that for the above purpose a piece of land measuring, more or less, 0·026 of an acre, bounded on the—

North—By the municipal drain and land of Lal Behari Bajpai,

East and South—By the municipal drain and Bajalpara Lane,

West—By the land and filled-up tank of Lal Behari Bajpai,

is required within the aforesaid village of Salkia.

This declaration is made, under the provisions of section 6, Act I of 1894, to all whom it may concern.

A plan of the land may be inspected in the office of the Collector of Howrah.

Howrah. — No. 2067L.A.—2nd February 1935.—Whereas it appears to the Governor in Council that land is required to be taken by Government at the expense of the Howrah Municipality for a public purpose, viz., for widening some portion of Sreebash Dutt 2nd Bye Lane, in the village of Howrah, pargana Boro, zilla Howrah, it is hereby declared that for the above purpose two pieces of land altogether measuring, more or less, 0·0221 of an acre, bounded on the—

Plot No. 1:

North and West—By Sreebash Dutta 2nd Bye Lane,

East—By lands of Krishna Kamini Devi and Prasanna Kumar Ghosh,

South—By lands of Krishna Kamini Devi,

Plot No. 2:

North—By Panchanantola Road,

East—By Sreebash Dutta 2nd Bye-lane,

South—By lands of Rampada Mukherjee and Sreebash Dutta 2nd Bye-lane,

West—By lands of Rampada Mukherjee,

are required within the aforesaid village of Howrah.

This declaration is made, under the provisions of section 6, Act I of 1894, to all whom it may concern.

A plan of the land may be inspected in the office of the Collector of Howrah.

Dacca. — No. 2152L.A. — 4th February 1935.—Whereas it appears to the Governor in Council that land is required to be taken by Government at the expense of the Narainganj Municipality for a public purpose, viz., for building methars' line and gowkhana in the villages of Masdair and Isdair, parganas Khizirpur, Arangabad and Tappagobindapur, zilla Dacca, it is hereby declared that for the above purpose a piece of land measuring more or less, 8·31 acres, comprised in cadastral survey plots Nos. 137, 115, 136, 135, 134, 133, 117, 132, 131, 130, 128, 129 and 118 and parts of plots Nos. 138, 112, 113, 116 and 119 of mauza Masdair and parts of plots Nos. 163 and 164 of mauza Isdair, is required within the aforesaid villages of Masdair and Isdair.

This declaration is made, under the provisions of section 6 of Act I of 1894, to all whom it may concern.

A plan of the land may be inspected in the office of the Subdivisional Officer, Narainganj.

Excise.

NOTIFICATIONS.

Minister-in-charge: The Hon'ble Sir Bijoy Prasad Singh Roy, Kt.

Chittagong. — No. 87Ex.—28th January 1935.—Maulvi Mabtul Hossain, Sub-Inspector of Excise and Salt, Chittagong, acted as an Inspector of Excise and Salt in connection with Matches Excise work for the period from the 26th October to 5th November 1934, during the absence, on leave, of Babu Nirmal Chandra Moitra, Sub-Deputy Collector, temporarily appointed to perform the duties of Inspector of Excise and Salt in connection with Matches Excise.

No. 92Ex.—29th January 1935.—The following Sub-Inspectors of Excise and Salt are appointed to be temporary Inspectors of Excise and Salt, with effect from the dates noted against their names:—

Babu Jyoti Prakas Sen—5th December 1934.

Babu Harendra Nath Mandal—17th December 1934.

Babu Surendra Nath Bose—24th November 1934.

Babu Haran Chandra Gupta—10th December 1934.

Babu Sashi Bhusan Pal—5th December 1934.

Babu Khitish Chandra Mukherjee—from date of joining.

Babu Khitish Chandra Sen—from date of joining.

Babu Khagendra Nath Acharji—from date of joining.

No. 93Ex. — 29th January 1935. — The following temporary Inspectors of Excise and Salt will revert to their substantive appointment of Sub-Inspector of Excise and Salt:—

Babu Girindra Nath Mukherjee.

Maulvi Nasiruddin Khan.

Babu Nani Gopal Goswami.

No. 94Ex. — 29th January 1935. — The following Sub-Inspectors of Excise and Salt are appointed to act as Inspectors of Excise and Salt:—

Babu Khitish Chandra Mukherjee from 25th November 1934 till he joins his new appointment as temporary Inspector.

Babu Rajeswar Pramanik.

Babu Phanindra Nath Muhuri.

O. M. MARTIN,
Secy. to the Govt. of Bengal.

Orders by the Commissioner of Excise and Salt, Bengal.

No. 50Exc.—1st February 1935. — The following Sub-Inspectors of Excise and Salt, who have been appointed to be Inspectors of Excise and Salt by Government, are posted to the stations noted against their names in the public interest:—

Babu Khitish Chandra Sen—From Kolaghat Warehouse (Midnapore) to Bonded Laboratory of Messrs. James Anderson and Co. and Davidson and Co. (Calcutta).

Babu Khagendra Nath Acharya—From Chuadanga and Sadar Warehouse (Nadia) to Bonded Laboratory of Messrs. Abdul Gunny and Co. (Calcutta).

Babu Rajeswar Pramanick—From Santahar Warehouse (Bogra) to Asansol Distillery (Burdwan).

Babu Phanindra Nath Muhari—From Murshidabad to Chittagong.

S. K. HALDAR,
Commr. of Excise and Salt, Bengal.

BOARD OF REVENUE, BENGAL.

NOTIFICATION.

Murshidabad. — No. 1596C.P. — 28th January 1935.—In exercise of powers conferred by clause (2) of section 8 of the Bengal Land Revenue (Assistant Collectors) Regulation, 1821 (IV of 1821), the Board of Revenue authorises Babu Mohini Mohan Choudhuri, Settlement Kanungo, who has been placed on duty in connection with the maintenance, for the purposes of section 158A of the Bengal Tenancy Act, 1885, of the record-of-rights of the estate of Babu Dwijendra Narayan Roy of Jemo, in the district of Murshidabad, to exercise and perform within the local limits of the said estate any of the powers and duties vested in the Collectors of Land Revenue under any enactment in force therein for the purpose of the said work of maintenance of the record-of-rights.

M. O. CARTER,
Secy. to the Board of Revenue, Bengal.

TREASURY NOTICES.

Alipore, the 1st February 1935.

The Uncovenanted Deputy Collector Babu Birendra Mohon Ghosh has been placed in executive charge of the District Treasury at Alipore, 24-Parganas, and he is authorised to draw bills on other treasuries.

K. A. L. HILL, *Collector.*

Dinajpur, the 1st February 1935.

Uncovenanted Deputy Collector Mr. Viresh Chandra Dutt has been placed in the executive charge of the Dinajpur Treasury with effect from the 1st February 1935, and he is authorised to draw bills on other treasuries.

S. P. GHOSH, *Collector.*

SHERIFF'S OFFICE.

The 17th January 1935.

Notice is hereby given that the First Criminal Sessions of the year 1935 of the High Court of Judicature at Fort William in Bengal for the town of Calcutta and factory of Fort William and the places subordinate thereto, will be held at the Court House, in the town of Calcutta, on Monday, the 18th day of February next, at 11 o'clock in the forenoon, and thenceforward from day to day until the said sessions be over. And it is hereby proclaimed that all persons who are to prosecute any of the prisoners to be brought up for trial at the said sessions be present then and there to prosecute.

A. H. GHUZNAVI, *Sheriff.*

শরিফ আফিস, সন ১৯৩৫ সালের ১৭ই জানুয়ারী।

সকলকে সমাচার দেওয়া যাইতেছে যে, সুবে বাঙ্গালার ফোর্ট উইলিয়ম দুর্গের অধীনে সহর কলিকাতার ও অন্যান্য স্থানের ফৌজদারী বিচার নিষ্পত্তি জন্য আগামী সন ১৯৩৫ সালের ১৮ই ফেব্রুয়ারী সোমবার বেলা ১১ ঘটিকার সময় এবং যে পর্য্যন্ত সেসিয়নের কার্য্য সমাধা না হয়, প্রতিদিন উক্ত সময়ে কলিকাতার হাইকোর্টের আপন আদালত ঘরে সন ১৯৩৫ সালের প্রথম ক্রিমিন্যাল সেসিয়ন বসিবেক, এবং এতদ্বারা প্রচার করা যাইতেছে যে, যে সকল ব্যক্তি কোন কয়েদীর বিরুদ্ধে কোন ফৌজদারী মিছিল করিবেক, তাহারা উক্ত স্থানে উক্ত সময়ে হাজির থাকিয়া মোকদ্দমা করে। ইতি।

এ, এইচ, গজনাভি,
শরিফ।

HIGH COURT NOTICE.

Original Side.

Calcutta, the 2nd February 1935.

The Hon'ble the Chief Justice has been pleased to grant leave on average pay to Mr. Jatindra Nath De, Assistant Registrar, High Court, Original Side, for four months from the 18th February 1935, under Fundamental Rules 81 (*b*) (*ii*) and 82 (*b*) and His Lordship has made the following acting appointment with effect from the 18th February 1935:—

Babu Haripado Maitra, Superintendent, Order Department, *vice* Mr. Jatindra Nath De, Assistant Registrar, on Rs. 300.

Note—The appointment of Babu Haripado Maitra will be governed by the terms of the order of the Hon'ble the Chief Justice, dated the 22nd March 1933.

By order,

A. L. COLLET, *Registrar.*

ORDERS BY COMMISSIONERS OF DIVISIONS.

Burdwan Division—Chinsura.

No. 520J.G.—29th January 1935. — Babu Saroj Behari De, Sub-Deputy Collector and Circle Officer of Gangajalghati, in the district of Bankura, is granted, under article 81 (*b*) (*ii*) of the Fundamental Rules, leave on average pay for four days from the 2nd to the 5th January 1935 with permission to prefix the X'mas and New Year's Day holidays to the leave.

No. 226L.S.-G.—2nd February 1935.—It is hereby notified for general information that, under rule 20 (*b*) of the rules for the management of charitable hospitals and dispensaries in Bengal, the following gentlemen have been appointed to be members of the committee for the managemnt of the charitable dispensary at Ramnagar in the district of Midnapore:—

The Subdivisional Officer, Contai (*ex-officio*).
The Circle Officer, Ramnagar (*ex-officio*).
The Sub-Registrar, Ramnagar (*ex-officio*).
The Tahsil Inspector, Wards' Estate.
Babu Maheswar Poria.
Babu Provat Chandra De.
Babu Dolegobinda Das.
Babu Mohendra Nath Das.
Babu Bidhu Bhusan Panda.
Maulvi Shaik Jagir.
Babu Hara Prosad Patra.
Babu Kailas Chandra Prodhan.

No. 229L.S.-G.—2nd February 1935.—It is hereby notified for general information that, under rule 20 (*b*) of the rules for the management of charitable hospitals and dispensaries in Bengal, the following gentlemen have been appointed to be members of the committee for the management of the charitable dispensary at Protapdighi in the district of Midnapore:—

The Subdivisional Officer, Contai (*ex-officio*).
Chowdhury Jogendra Nandan Das Mahapatra.
Chowdhury Anadinandan Das Mahapatra.
Babu Jyotish Chandra Gajendra Mahapatra.
Syed Mahammad Hossain.
Babu Prasanna Kumar Das.
Babu Golokendra Das Jana.
Babu Krishna Chandra Das Mohapatra.
Babu Bhimacharan Roy Choudhury.
Babu Mohendranath Mohanti.
Babu Lakshmi Narayan Nanda Goswami.
Babu Ramanath Mahanti.

No. 232L.S.-G.—2nd February 1935.—It is hereby notified for general information that, under rule 20 (*b*) of the rules for the management of charitable hospitals and dispensaries in Bengal, the following gentlemen have been appointed to be members of the committee for the management of the charitable dispensary at Sonakhali in the district of Midnapore:—

The Subdivisional Officer, Ghatal (*ex-officio*).
Babu Radhanath Maiti.
Babu Bhutnath Singha.
Babu Rakhal Chandra Mandal.
Babu Satish Chandra Bera.
Babu Basanta Kumar Samanta.
Babu Harendra Nath Mandal.
Babu Gobinda Chandra Bera.
Babu Brojendra Nath Panja.
Babu Baistab Das Rana.
Babu Surja Kumar Maiti.

No. 235L.S.-G.—2nd February 1935.—It is hereby notified for general information that, under rule 20 (*b*) of the rules for the management of charitable hospitals and dispensaries in Bengal, the following gentlemen have been appointed to be members of the committee for the management of the charitable dispensary at Salboni in the district of Midnapore:—

Babu Chunilal Doshi.
Babu Mahendra Nath Rana.
Babu Karali Charan Samanta.
Babu Nathuram Marwari.
Babu Chaganlal Roy.
Babu Ramrenu Sinha.
Babu Apurba Kumar Mitra.
Babu Ashutosh Mandal.
Babu Pravas Kumar Paul.
Babu Satya Narayan Banerjee.
Babu Sudharam Mondal.

No. 238L.S.-G.—2nd February 1935.—It is hereby notified for general information that, under rule 20 (*b*) of the rules for the management of charitable hospitals and dispensaries in Bengal, the following gentlemen have been appointed to be members of the committee for the management of the charitable dispensary at Garbetta in the district of Midnapore:—

The Munsif, Garbetta (*ex-officio*).
The Sub-Registrar, Garbetta (*ex-officio*).
The Circle Officer, Garbetta (*ex-officio*).
Babu Behari Lal Chakravarti.
Babu Rati Kanta Sukul.
Babu Siva Prasad Choudhury.
Maulvi Abul Khair Muhammad Sikendar.
Babu Nanigopal Sanyal.
Babu Bhupati Lal Mukherjee.
Babu Bepin Behari De.
Babu Krishna Prasad De, M.B.
Babu Gokul Chandra Tewari.

No. 241L.S.-G.—2nd February 1935.—It is hereby notified for general information that, under rule 20 (*b*) of the rules for the management of charitable hospitals and dispensaries in Bengal, the following gentlemen have been appointed to be members of the committee for the management of the charitable dispensary at Nandigram in the district of Midnapore:—

The Subdivisional Officer, Tamluk (*ex-officio*).
The Circle Officer, Mahisadal (*ex-officio*).
The Sub-Registrar, Nandigram (*ex-officio*).
Babu Sarbeswar Sasmal.
Babu Sarat Chandra Das.
Maulvi Azizur Rahman.
Babu Umesh Chandra Bal.
Babu Trailakhya Nath Mojumdar.
Babu Ram Narayan Parua.
Babu Broja Mohon Tewari.
Babu Bhutnath Kabyatirtha.
The Sub-Inspector of Police, Nandigram (*ex-officio*).

No. 567J.G.—31st January 1935.—The appointment of Miss Ushalata Biswas as a non-official lady visitor of the Burdwan Sadar Jail, made in this office notification No. 3658-J.G. of the 8th September 1934, is hereby cancelled under rule 63(A) of Chapter IV of the Bengal Jail Code, Volume I, for her inability to serve as a jail visitor due to transfer.

No. 571J.G.—31st January 1935.—In accordance with the provisions of rule 63 (*2*) of Chapter IV of the Bengal Jail Code, Volume I, I hereby appoint Mrs. A. Bhattacherjee to be a non-official lady visitor of the Burdwan Sadar Jail for a period of two years with effect from the date of this notification.

No. 575J.G.—31st January 1935.—In accordance with the provisions of rule 63 (*2*) of Chapter IV of the Bengal Jail Code, Volume I, I hereby re-appoint Babu Kshirod Chandra Ghosh to be a non-official visitor of the Howrah Sadar Jail in the district of Howrah for a period of two years with effect from the 27th February 1935.

L. B. BURROWS, *Commissioner.*

Burdwan, the 30th January 1935.

It is hereby notified for general information that, under section 13 of the Bengal Village Self-Government Act, 1919 (Bengal Act V of 1919), read with rule 35 of the rules for the election and appointment of members of union boards, etc., Babu Sudhangsu Sekhar Roy has been elected to be a member of Ward No. II of the Gopalbera union board in police-station Khandaghosh in the Sadar subdivision of Burdwan, *vice* Babu Satish Chandra Basu, deceased.

M. M. STUART, *District Magistrate.*

Chittagong Division—Chittagong.

No. 425G.—28th January 1935.—In exercise of the power conferred by section 6 (*c*) of the Bengal Ferries Act, I of 1885, and delegated to the Commissioners of Divisions by Government notification No. 3403L.S.-G., dated the 1st December 1904, the undersigned being of opinion that a new public ferry is needed between Farashganj and Musarkhal in police-station Lakhipur, in the district of Noakhali, hereby sanctions the establishment of such ferry and issues this notification for general information.

2. Furthermore, in exercise of the powers conferred on him by Government notification No. 217L.S.-G., dated the 12th January 1905, he also directs under section 35 of the said Act, I of 1885 (B.C.), that this ferry be managed by the district board of Noakhali and that all the proceeds of this ferry and all the fines levied and compensation received under the said Act in respect thereof be paid into the district fund of Noakhali with effect from the date of opening of the ferry.

No. 494G.—30th January 1935. — Maulvi Abdul Karim, No. 1, Sub-Deputy Collector, Tippera, was appointed Circle Officer of Brahmanbaria within the same district with effect from the 19th November 1934.

No. 499G.—30th January 1935.—In supersession of this office notification No. 6363G., dated the 20th December 1934, Maulvi Abul Khair, Sub-Deputy Collector, who was posted to this division in Government notification No. 14082A., dated the 8th December 1934, is appointed to be Circle Officer of Muradnagar in the district of Tippera.

No. 504G.—30th January 1935. — Maulvi Bazlur Rahman, Sub-Deputy Collector, on leave, who has been posted to this division in Government notification No. 529A., dated the 18th January 1935, is posted to the headquarters station of the Noakhali district on general duty.

H. GRAHAM, *Commissioner (offg.)*.

Comilla, the 28th January 1935.

No. 790M.—It is hereby notified for general information that, under section 13 of the Bengal Village Self-Government Act, 1919, read with section 6 (*2*) and rule 35 of the rules for the election and appointment of members of union boards, Munshi Abdul Hamid Patwari has been duly elected as a member of the Govindapur union board No. V of Faridgunj police-station in the Chandpur subdivision of the district of Tippera, *vice* Maulvi Abdul Halim Patwari, removed by the district board, Tippera.

A. HYE, *Addl. District Magistrate*.

Noakhali, the 31st January 1935.

No. 535J.—It is hereby notified for general information that, under section 13 of the Bengal Village Self-Government Act (Act V of 1919) read with rule 35 of the rules for the election and appointment of members of union boards, Munshi Abdul Bari Choudhuri *alias* Babru Mia has been elected to be a member of the Parashuram union board No. 2 within the Parashuram police-station in the Feni subdivision of the district of Noakhali, *vice* Munshi Ali Ahmed Mazumder, deceased.

No. 538J.—It is hereby notified for general information that, under section 13 of the Bengal Village Self-Government Act, V of 1919, read with rule 35 of the rules for the election and appointment of members of union boards, Munshi Abdul Kader Chaudhuri, son of Fazaler Rahman Chaudhuri, of village Uttar Sripur, post-office Munshirhat, police-station Chhagalnaiya, has been duly elected to be a member of Munshirhat union board No. 1, police-station Chhagalnaiya in the Feni subdivision of the district of Noakhali, *vice* Munshi Bazaler Rahaman Chaudhuri, deceased.

A. WHITTAKER, *District Magistrate*.

Orders by the Deputy Inspector-General of Police, Bakarganj Range.

Barisal.—No. 576.—31st January 1935.—Babu Indu Bhushan Ghosh, Inspector, Tippera, is granted 4 months' leave on average pay, under rule 81 (*b*) (*ii*) of the Fundamental Rules, with effect from the 1st March 1935.

Sub-Inspector Haji Abdul Majid of Bakarganj is appointed to act as Inspector in the vacancy.

The transfer is effected in the interests of public service.

G. H. MANNOOCH,
Deputy Inspector-General of Police (offg.).

Dacca Division—Dacca.

No. 525J.—30th January 1935. — Maulvi Nuruddin Ahmad, No. II, Sub-Deputy Collector, on leave, is posted to the headquarters station of the district of Dacca on general duty.

No. 556J. — 31st January 1935. — Babu Manmatha Nath Guha, Sub-Deputy Collector and Circle Officer, Dewanganj Circle, in Jamalpur subdivision of the district of Mymensingh, was allowed leave on average pay from the 22nd December 1934 to the 5th January 1935, under rule 81 (*b*) (*ii*) of the Fundamental Rules.

W. H. NELSON, *Commissioner*.

Faridpur, the 24th January 1935.

Under rule 32A of the Election Rules under the Local Self-Government Act, it is notified for general information that the 12th February to 17th February 1935, both days inclusive, have been fixed for the general and special election of members for the Faridpur Sadar, Madaripur and Goalundo local boards in the following manner:—

Statement showing the polling centres, dates and hours of election and place, time and dates of declaration of results thereof for publication in the Calcutta Gazette, *under rule 32A of the Local Board Election Rules.*

Sadar subdivision.

Thana.	Polling centres.	Date.
	Hours—11 a.m. to 2 p.m.	
Bhushna ..	Boalmari thana ..	12th Feb. 1935.
	Dhopaghata Bazar	14th Feb. 1935.
	Chandpur I. B. ..	13th Feb. 1935.
	Sasrail Bazar ..	15th Feb. 1935.
	Madhukhali I. B. ..	17th Feb. 1935.
Sadarpur ..	Souldubi School ..	12th Feb. 1935.
	Chowdhurirhat ..	14th Feb. 1935.
	Sadarpur I. B. ..	16th Feb. 1935.

N. B.—The election for general seats only for the above two thanas will take place. The result of these elections will be declared at the Subdivisional Headquarters on the 22nd February 1935 between 11-30 a.m. and 2-30 p.m.

Madaripur subdivision.

Thana.	Polling centres.	Date.
	Hours—11 a.m. to 4 p.m.	
Madaripur ..	Madaripur Municipal School.	16th Feb. 1935.
	Mustafapur H. E. School.	15th Feb. 1935.
	Mithapur H. E. School.	12th Feb. 1935.
	Ditto ..	13th Feb. 1935.
	Angulkata Hat ..	12th Feb. 1935.
	Ditto ..	13th Feb. 1935.
Rajoir ..	Rajoir-Badarpasha H. E. School.	12th Feb. 1935.
	Ditto ..	13th Feb. 1935.
	Ditto ..	14th Feb. 1935.
	Kabirajpur H. E. School.	12th Feb. 1935.
	Ditto ..	13th Feb. 1935.
Kalkini ..	Char Fatebahadur K. M. M. E. School.	15th Feb. 1935.
	Ditto ..	14th Feb. 1935.
	Degreerchar Board School.	12th Feb. 1935.
	Birmohon H. E. School.	12th Feb. 1935.
	Ditto ..	13th Feb. 1935.
Palong ..	Palong H. E. School	15th Feb. 1935.
	Ditto ..	16th Feb. 1935.
	Chikandi H. E. School.	12th Feb. 1935.
	Ditto ..	13th Feb. 1935.
	Angaria H. E. School.	12th Feb. 1935.
	Ditto ..	13th Feb. 1935.
Goshairhat ..	Goshairhat H. E. School.	15th Feb. 1935.
	Ditto ..	16th Feb. 1935.
	Damodya H. E. School.	12th Feb. 1935.
	Ditto ..	13th Feb. 1935.
Bhedarganj ..	Chhoygaon H. E. School.	12th Feb. 1935.
	Ditto ..	13th Feb. 1935.
	Kaneswar H. E. School.	15th Feb. 1935.
	Sakhipur H. E. School.	12th Feb. 1935.
	Ditto ..	13th Feb. 1935.
Naria ..	Naria H. E. School	13th Feb. 1935.
	Ditto ..	14th Feb. 1935.
	Ditto ..	15th Feb. 1935.
	Panditahar H. E. School.	12th Feb. 1935.
	Ditto ..	13th Feb. 1935.
	Ditto ..	14th Feb. 1935.
Sibchar ..	Bhadrasan H. E. School.	12th Feb. 1935.
	Ditto ..	13th Feb. 1935.
	Takerhat Junior Madrasah.	15th Feb. 1935.
	Utrail Aminaddin Howladar Hatkhola.	14th Feb. 1935.
	Ditto ..	15th Feb. 1935.
	Matbarerchar H. E. School.	12th Feb. 1935.
	Sannyasirchar U. B. Office.	15th Feb. 1935.
	Sibchar H. E. School	16th Feb. 1935.
Janjira ..	Rajarchar Katchery No. I on the Noyabhangani River.	13th Feb. 1935.
	Ditto ..	14th Feb. 1935.
	Janjira thana ..	16th Feb. 1935.
	Chardhuparia Katchery.	15th Feb. 1935.

N. B.—The election for the special seat for Goshairhat-Bhedarganj-Naria thanas group will not be held. The result of the election for general seats of these thanas and for the special and general seats of the other thanas will be declared at the Subdivisional Headquarters on 19th February 1935 between 12 noon and 4 p.m.

Goalundo subdivision.

Thana.	Polling centres.	Date.
	Hours—11 a.m. to 5 p.m.	
Goalundo ..	Goalundoghat thana building.	12th Feb. 1935.
	Ditto ..	13th Feb. 1935.
Rajbari ..	Khankhanapur H. E. School.	12th Feb. 1935.
	Basantapur Primary School.	13th Feb. 1935.
	Hamdampur Katchery.	12th Feb. 1935.
	Rajbari thana building.	12th Feb. 1935.
Baliakandi ..	Baharpur M. E. School.	16th Feb. 1935.
	Padamdi Katchery (Nowab-bari).	16th Feb. 1935.
	Baliakandi H. E. School.	16th Feb. 1935.
	Ditto ..	17th Feb. 1935.
	Jamalpur Bazar ..	16th Feb. 1935.
	Karakdi H. E. School.	16th Feb. 1935.

N. B.—The result of the election of Goalundoghat and Rajbari thanas for both special and general seats will be declared at Subdivisional Headquarters, Rajbari, at 4 p.m., on 15th February 1935, and the result of the election for both special and general seats for Baliakandi thana will be declared at Rajbari on 19th February 1935 at 4 p.m.

Faridpur, the 26th January 1935.

Under rule 32A of the Election Rules under the Local Self-Government Act, it is notified for general information that 12th, 14th, 16th and 18th February 1935 have been fixed for the election of members for the general, *i.e.*, ordinary seats for Gopalganj local board in the following manner:—

Thana.	Polling centres.	Date.
	Hours—10-30 a.m. to 3-30 p.m.	
Kasiani ..	Kasiani police-station.	12th Feb. 1935.
	Orakandi H. E. School.	12th Feb. 1935.
	Fukra H. E. School	12th Feb. 1935.
Muksudpur ..	Muksudpur police-station.	14th Feb. 1935.
	Gohala ..	14th Feb. 1935.
	Batikamari School	14th Feb. 1935.
	Goalgram M. E. School.	14th Feb. 1935.
Kotwalipara ..	Kotwalipara police-station.	16th Feb. 1935.
	Pinjury M. E. School	16th Feb. 1935.
	Radhaganj Hat ..	16th Feb. 1935.
Gopalganj ..	Gopalganj police-station.	18th Feb. 1935.
	Kushli Hat ..	18th Feb. 1935.
	Gopinathpur H. E. School.	18th Feb. 1935.
	Ulpur H. E. School	18th Feb. 1935.

N. B.—There is no special seat allocated to any of the thanas. The election will take place for general seats only. The result of the election for Kasiani and Muksudpur thanas will be declared at the thanas at 8 a.m. on 13th February 1935 and 15th February 1935, respectively, and the result of election for Kotwalipara thana will be declared at the thana at 8 a.m. on 17th February 1935 and that of Gopalganj thana at the thana at 8 a.m. on 19th February 1935.

Faridpur, the 1st February 1935.

No. 895J.—In modification of the notification, dated the 24th January 1935, published at pages 294-295 of the *Calcutta Gazette* of the 31st January 1935, it is hereby notified for general information that no local board election will be held in the following thanas of the subdivisions noted against their names of the district of Faridpur:—

Name of thana.		Name of subdivision.
Bhedarganj	...	Madaripur.
Goalundoghat	...	Goalundo.
Rajbari	...	Goalundo.

R. L. DE, for *District Magistrate.*

Dacca, the 30th January 1935.

No. 1289-91M.—It is hereby notified for general information that—

(*a*) Under sub-section (*2*) of section 6 of the Bengal Village Self-Government Act, 1919 (Bengal Act V of 1919), the following gentlemen have been duly elected to be members of the Joydebpur union board in police-station Joydebpur in the Sadar (North) subdivision of the Dacca district:—

Doctor Anarali.
Munshi Boli Mamud.
Babu Dwitindra Chandra Mukherjee.
Munshi Alimuddi Sarker.
Munshi Ibrahim Mondal.
Babu Jnan Chandra Chakraverty.

(*b*) Under sub-section (*3*) of section 6 of the Act, the following gentlemen have been appointed by me to be members of the said union board:—

Babu Nripendra Chandra Roy.
Babu Krishna Chandra Mallik.
Muhammad Hossain Mondal.

B. C. PRANCE, *District Magistrate.*

Barisal, the 31st January 1935.

No. 641J.—It is hereby notified for general information that the Subdivisional Officer, Sadar subdivision (South), district Bakarganj, is appointed a member and president (*ex-officio*) of the managing committee of the Jhalakati High English School in place of the District Magistrate, Bakarganj.

A. J. DASH, *District Magistrate.*

Orders by the Deputy Inspector-General of Police, Dacca Range.

Dacca.—No. 478.—31st January 1935.—In partial modification of the orders published under notification No. 379, dated the 23rd January 1935, in the *Calcutta Gazette*, dated the 31st January 1935, Maulvi Khwaja Nuruddin, Inspector, Mymensingh, is granted 1 month's leave on average pay, on medical certificate, with effect from the 5th January 1935.

R. M. WRIGHT,
Deputy Inspector-General of Police.

Presidency Division—Calcutta.

No. 185M.—28th January 1935.—In exercise of the powers conferred by section 50 of the Bengal Municipal Act, 1932 (Bengal Act XV of 1932), it is hereby notified for general information that Mr. R. de V. Irwin and Babu Sudhir Ranjan Ray have been duly elected Chairman and Vice-Chairman respectively of the Kanchrapara Municipality in the district of the 24-Parganas.

No. 188M.—28th January 1935.—In exercise of the powers conferred by section 50 of the Bengal Municipal Act (Bengal Act XV of 1932), it is hereby notified for general information that Babu Purna Chandra Bagchi and Babu Kalidas Chakravarty have been duly elected Chairman and Vice-Chairman of the Nabadwip Municipality in the district of Nadia.

No. 200M.—30th January 1935.—In exercise of the powers conferred by section 50 of the Bengal Municipal Act, 1932 (Bengal Act XV of 1932), it is hereby notified for general information that Mr. J. M. Burnet has been duly elected Chairman of the Kamarhati Municipality in the district of the 24-Parganas, in place of Mr. E. F. McKenzie, resigned.

No. 72J.G. — 31st January 1935.—It is hereby notified for general information that in exercise of the powers conferred on me by rule 63 (*2*) of the Bengal Jail Code, Volume I, as revised, I appoint the following gentlemen to be non-official visitors of the jail and sub-jails noted below in the district of Khulna for a period of two years with effect from the date of this notification:—

Khulna District Jail.

Babu Mohendra Kumar Ghosh, M.A., B.L.
Rai Jatindra Nath Ghosh Bahadur, B.L.
Maulvi Kazi Saifuddin.

Bagerhat Sub-Jail.

Babu Ram Narayan Roy Choudhury.
Maulvi Abdur Rashid.

Satkhira Sub-Jail.

Babu Debendra Nath Banerjee.
Maulvi Abdur Rauf Khan Choudhury.

No. 186L.S.-G.—31st January 1935. — It is hereby notified for general information that, under section 19 (*1*) of the Bengal Local Self-Government Act, III (B.C.) of 1885, as amended, Babu Jnanendra Nath Upadhyay has been duly elected a member of the Diamond Harbour local board in the 24-Parganas district, in place of Babu Sudhir Kumar Acharji, deceased.

No. 81J.G.—2nd February 1935.—It is hereby notified for general information that in exercise of the powers conferred on me by rule 63 (*2*) of the Bengal Jail Code, 1919, Volume I, as revised, I appoint Babu Suresh Chandra Tagore and Mr. Syed Hasan Mirza to be non-official visitors of the Lalbagh Sub-Jail in the district of Murshidabad for a period of two years, with effect from the 2nd February 1935.

H. J. TWYNAM, *Commissioner.*

No. 261R.G.—31st January 1935. — Babu Hemanta Kumar Kar, Sub-Deputy Collector and Circle Officer, Bongaon, Jessore, is granted leave on average pay for four days, under rule 81 (*b*) (*ii*) of the Fundamental Rules, with effect from the 2nd January 1935.

K. A. L. HILL, *Commissioner (offg.)*.

Alipore, the 25th January 1935.

No. 24/35-2-V.S.-G.—It is hereby notified for general information that, under section 13 of the Bengal Village Self-Government Act (Act V of 1919), Babu Saurindra Mohan Aikat has been appointed to be a member of the Dakshin Raipur union board in police-station Budge Budge in the Sadar subdivision of the district of the 24-Parganas, in place of Babu Birendra Mohan Sur, resigned.

S. N. RAY, *Addl. District Magistrate*.

Krishnagar, the 26th January 1935.

No. 326L.S.-G.—It is hereby notified for general information that, under section 13 of the Bengal Village Self-Government Act, 1919 (Bengal Act V of 1919), read with rule 36 of the rules for the election and appointment of members, etc., of union boards under the said Act, Munshi Nur Muhammad Mondal has been duly elected to be a member of the Belpukur union board within the Krishnagar police-station in the Sadar subdivision of the Nadia district, in place of Munshi Rohim Gain, deceased.

S. BANERJEE, *District Magistrate*.

Jessore, the 31st January 1935.

Under rule 2, section V of the rules for managing committees of Government High Schools, the following gentlemen have been appointed as members of the committee for the management of the Jessore Zilla School:—

The District Magistrate, Jessore, President (*ex-officio*).

The Head Master of the school, Vice-President and Secretary (*ex-officio*).

The Sadar Subdivisional Officer, Jessore, representing an official other than an Inspecting Officer of the Education Department (*ex-officio*).

Babu Kshitinath Ghosh, B.A., B.E., District Engineer, Jessore, representative of the parents and guardians of the school pupils.

Maulvi Serajul Islam, M.A., B.L., Pleader, Jessore, representative of the parents and guardians of the school pupils.

Maulvi Zahid Ali Khan, B.A., B.T., Assistant Head Master, representative of the teaching staff.

M. F. KARIM, *District Magistrate*.

Bengal Chamber of Commerce Constituency of the Bengal Legislative Council.

Calcutta, the 7th February 1935.

Notice is hereby given under the provisions of No. 19 (*5*) of the Bengal Electoral Rules that the return of election expenses and declaration made in respect thereto with regard to his candidature for election as a representative of the Bengal Chamber of Commerce Constituency of the Bengal Legislative Council was duly lodged with me by Mr. G. W. Leeson. The return and declaration may, on payment of a fee of one rupee, be inspected on application to me at my office between the hours of 11 a.m. and 4 p.m. for one week from date.

A. C. DANIEL, *Returning Officer*.

Orders by the Deputy Inspector-General of Police, Intelligence Branch.

Calcutta.—No. 170.—29th January 1935.—Sub-Inspector Satya Gopal Basu is appointed to act as Inspector with effect from 2-1-1935, a.m., *vice* Babu Radharaman Chatarji, Inspector, granted leave.

Sub-Inspector Santosh Kumar Gupta is appointed to act as Inspector with effect from 2-1-1935, a.m., *vice* Babu Amarendra Kumar Sen, officiating Inspector, granted leave.

C. E. S. FAIRWEATHER,
Deputy Inspector-General of Police (offg.).

Rajshahi Division—Jalpaiguri.

No. 331M.—28th January 1935.—In exercise of the power conferred on me by section 19 (*2*) of the Bengal Local Self-Government Act (Bengal Act III of 1885), I hereby appoint the Circle Officer, Parbatipur Circle, in the Sadar subdivision of the Dinajpur district, to be an *ex-officio* member of the Sadar local board in the district of Dinajpur, *vice* the Circle Officer, Dinajpur Sadar, resigned.

No. 334M.—28th January 1935.—In exercise of the power conferred on me by section 19 (*2*) of the Bengal Local Self-Government Act (Bengal Act III of 1885), I hereby appoint the Circle Officer, Setabganj Circle, in the Thakurgaon subdivision of the district of Dinajpur, to be an *ex-officio* member of the Thakurgaon local board in the district of Dinajpur, *vice* the Circle Officer, Thakurgaon, resigned.

No. 337M.—28th January 1935.—In exercise of the power conferred on me by section 19 (*2*) of the Bengal Local Self-Government Act (Bengal Act III of 1885), I hereby appoint the Circle Officer of the Parbatipur Circle in the Balurghat subdivision of the district of Dinajpur to be an *ex-officio* member of the Balurghat local board in the district of Dinajpur, *vice* the Circle Officer, Balurghat, resigned.

No. 397M.—31st January 1935.—In exercise of the power conferred on me by section 19 (*2*) of the Bengal Local Self-Government Act (Bengal Act III of 1885), I hereby appoint the Superintendent of Police of Bogra to be an *ex-officio* member of the Bogra district board, *vice* Mr. Altaf Ali, who has ceased to be a member under section 16B(*2*) of the Act.

F. W. ROBERTSON, *Commissioner*.

Registered No. C207

The Calcutta Gazette

THURSDAY, FEBRUARY 7, 1935.

PART IA

Orders and Notifications by the Government of India republished for general information.

DEPARTMENT OF INDUSTRIES AND LABOUR.

NOTIFICATIONS.

New Delhi, the 23rd January 1935.

No. M.-1222.—In exercise of the powers conferred by sub-section (1) of section 4 of the Indian Mines Act, 1923 (IV of 1923), the Governor-General in Council is pleased to appoint Dr. D. Penman, F.R.S.E., to be Chief Inspector of Mines for the whole of British India, *vice* Mr. J. H. Lang.

No. L.-3002.—In pursuance of sub-section (3) of section 2 of the Workmen's Compensation Act, 1923 (VIII of 1923), the Governor-General in Council is pleased to give notice of his intention to add to Schedule II to the said Act the persons employed otherwise than in a clerical capacity in the following occupations, namely:—

(*a*) the felling or logging of trees;
(*b*) the transport of timber by inland waters;
(*c*) the control or extinguishing of forest fires; and
(*d*) elephant-catching operations.

Any suggestions or objections with reference to this notification should reach the Government of India not later than the 28th April 1935.

A. G. Clow,
Joint Secy. to the Govt. of India.

Civil Aviation.

New Delhi, the 24th January 1935.

No. T.-51.—In pursuance of entry 51 in Part II of Schedule 1 to the Devolution Rules, the Governor-General in Council is pleased to cancel the notification of the Government of India in the Department of Industries and Labour No. T.-51, dated the 24th March 1934.

D. G. Mitchell,
Secy. to the Govt. of India.

NAVY DEPARTMENT.

New Delhi, the 26th January 1935.

No. 3.—The services of Engineer Lt.-Comdr. H. J. Creswell, R.I.N., are placed at the disposal of the Govt. of India, Department of Commerce, for employment as offg. 4th Engineer and Ship Surveyor, Calcutta, with effect from the 9th Dec. 1934, and as 4th Engineer and Ship Surveyor, Calcutta, with effect from the 1st Mar. 1935, *vice* Engineer Lt.-Comdr. J. H. Mackay, R.I.N.

G. R. F. Tottenham,
Secy. to the Govt. of India.

HOME DEPARTMENT.

NOTIFICATION.

ESTABLISHMENT.

New Delhi, the 21st January 1935.

No. F.-376/34. — The undermentioned gentlemen who have been appointed to the Indian Civil Service are allotted to the provinces as follows:—

* * * * *

Bengal.

K. Sen.
W. H. Saumarez Smith.
S. Drucquer.
S. Banerjea.
E. R. Kitchin.
B. G. Rao.
M. Ahmad.

* * * *

M. G. HALLETT,
Secy. to the Govt. of India.

ARMY DEPARTMENT.

New Delhi, the 26th January 1935.

Part B.

JUDICIAL.

No. 44.—In exercise of the powers conferred by section 13 of the Indian Territorial Force Act, 1920 (XLVIII of 1920), the Governor-General in Council is pleased to direct that the following further amendments shall be made in the Indian Territorial Force Rules, 1921, the same having been previously published as required by sub-section (*1*) of the said section, namely:—

1. In sub-rule (*2*) of rule 11 of the said Rules, after clause (*e*), the following clause shall be inserted, namely:—

"(*f*) that, in the case of an officer, he has been permitted to resign his commission."

2. In the table set out in sub-rule (1) of rule 12 of the said Rules, after the entries relating to "Clause (*e*) of sub-rule (2) of Rule 11", the following entries shall be inserted, in the first and second columns respectively, namely:—

"Clause (*f*) of sub-rule (2) of rule 11.	The Governor-General in Council."

ORGANIZATION.

No. 45. — The following draft of a further amendment to the Auxiliary Force Rules, 1920, which it is proposed to make in exercise of the powers conferred by section 30 of the Auxiliary Force Act, 1920 (XLIX of 1920), is published as required by sub-section (*4*) of the said section, for the information of all persons likely to be affected thereby, and notice is hereby given that the said draft will be taken into consideration on or after the 26th February 1935.

Any objection or suggestion which may be received from any person with respect to the draft before the said date will be considered by the Governor-General in Council:—

Draft amendment.

In rule 9 of the said Rules—

(*a*) in sub-rule (*4*), after clause (*e*), the following clause shall be inserted, namely:—

"(*f*) that, having left India permanently, or having permanently changed his residence to an area in which no unit of the Auxiliary Force, India, exists, he is no longer available to perform military service under the Act.";

(*b*) in the table set forth in sub-rule (*5*), after item (*h*), the following item shall be inserted, namely:—

"(*i*) Having left India permanently, or having permanently changed his residence to an area in which no unit of the Auxiliary Force, India, exists, and being therefore no longer available to perform military service under the Act.	The Officer Commanding the Corps or Unit."

G. R. F. TOTTENHAM,
Secy. to the Govt. of India.

Registered No. C207

The Calcutta Gazette

THURSDAY, FEBRUARY 7, 1935.

PART IB

Educational Notices.

Rajshahi Division.

Jalpaiguri, the 21st January 1935.

The following candidates have been awarded the Lower Primary Scholarships reserved for backward classes on the results of the Primary Preliminary Scholarship Examination of 1934. Each scholarship is of the value of Rs. 2 a month tenable for two years with effect from the 1st January 1935 :—

(Ten Government Lower Primary Scholarships reserved for backward classes.)

	Name of scholars.	Name of schools from which the scholars appeared.	Name of schools where the scholarship is tenable.
1	Birendra Nath Sarkar ..	Kajla U. P. School (Rajshahi) ..	Kajla U. P. School (Rajshahi).
2	Madan Gopal Sarkar ..	Baya Board Primary School (Rajshahi)	Baya Board Primary School (Rajshahi).
3	Jamini Kanta Das ..	Paraharipur Board Primary School (Dinajpur).	Raiganj H. E. School (Dinajpur).
4	Kanai Lal Roy ..	Chakoakhuti Board Primary School (Jalpaiguri).	Alipur Duar H. E. School (Jalpaiguri).
5	Mahendra Nath Barman ..	Rupsi Napithpara Primary School (Rangpur).	Ranipukur Board Primary (Rangpur).
6	Bichitra Kumar Roy Chowdhury	Yakubia Maktab (Bogra) ..	Zilla School (Bogra).
7*	Kartick Chandra Mali ..	Koladi Maktab (Pabna) ..	Koladi Maktab (Pabna).
8	Upendra Nath Das ..	Pukurpar Primary School (Pabna) ..	Dariapur M. E. School (Pabna).
9	Mahendra Rajbangshi ..	Kharibari Santhal Primary School (Malda).	Kharibari Santhal Primary School (Malda).

10 Award of this scholarship will be made later on.

K. AHMED,

Inspector of Schools, Rajshahi Division.

Orders by the Principal, Eden High School for Girls, Dacca.

Dacca, the 16th January 1935.

The under-mentioned pupils of the Eden High School for Girls, Dacca, are awarded special Middle English Scholarships, with effect from the 1st January 1935, on the usual condition of good conduct and satisfactory progress. The value of each scholarship is Rs. 5 a month and is tenable for four years in the Eden High School for Girls, Dacca :—

(1) Karuna Gupta.

(2) Sachirani Ghosh.

The under-mentioned pupils of the Eden High School for Girls, Dacca, are awarded special Middle Vernacular Scholarships, with effect from 1st January 1935, on the usual condition of good conduct and satisfactory progress. The value of each scholarship is Rs. 4 a month and is tenable for two years in the Eden High School for Girls, Dacca :—

(1) Ramala Ghosh.

(2) Sibani Sen.

The under-mentioned pupils of the Eden High School for Girls, Dacca, are awarded special Lower Primary Scholarships, with effect from the 1st January 1935, on the usual condition of good conduct and satisfactory progress. The value of each scholarship is Rs. 3 a month and is tenable for three years in the Eden High School for Girls, Dacca :—

(1) Sandhyarani Ghosh.

(2) Annapurna Sarcar.

(3) Nirmala Pal.

V. ALPHONSO, *Principal,*

Eden High School for Girls, Dacca.

Presidency Division.

Calcutta, the 21st January 1935.

Addendum to the Results of the Primary (Maktab) Final Examination, 1934, Khulna district, published in the Calcutta Gazette of 10th January 1935.

The following candidate is declared to have passed the Primary (Maktab) Final Examination, 1934 :—

"E" indicates that the candidate has passed in English.

Roll No.	Name.	Division.
	Khulna District.	
	Bagerhat Centre.	
	Bagmara U. P.	
19	Susil Ranjan Das (E) ..	I

J. G. SEN, for *Inspector of Schools.*

The Elliott Prize for Scientific Research for 1935—39.

Calcutta, the 15th January 1935.

In accordance with the Government of Bengal, General Department, revised notification No. 112T.Edn., dated the 5th May 1917, published in Part I, page 667 of the *Calcutta Gazette*, 1917, the Elliott Prize for Scientific Research for 1935 will be awarded to the author of the best original essays giving the results of original research or investigation made by the candidate in Geology and Biology (including Pathology and Physiology) and published during the years 1931—34, inclusive.

In accordance with the notification cited above, the Elliott Prize for Scientific Research for 1936 will be awarded to the author of the best original essays, giving the results of original research or investigation made by the candidate in Mathematics and published during the years 1932—35, inclusive.

Any native of Bengal, or Bihar and Orissa, or any Anglo-Indian or domiciled European, residing in Bengal, or Bihar and Orissa, may compete for the prize.

The essays of competitors must be sent in so as to reach the President of the Asiatic Society of Bengal, c/o the General Secretary, 1, Park Street, Calcutta, by the end of June of this year. Author's reprints must be submitted and not manuscripts. The prize will be awarded to the best competitor and be conferred publicly at the Annual General Meeting of the Asiatic Society of Bengal in February 1936.

Preference will be given to researches leading to discoveries likely to develop the industrial resources of Bengal, or Bihar and Orissa.

The value of the prize will not be less than Rs. 210. In the event of no essay being deemed of sufficient merit, no prize will be awarded.

The prizes for the next four years will be allotted as follows :—

1936—Mathematics.

1937—Chemistry.

1938—Physics.

1939—Geology and Biology (including Pathology and Physiology).

All essays submitted must have been published during the four calendar years immediately preceding that for which the prize is given.

L. L. FERMOR,

President, Asiatic Society of Bengal.

SYAMAPRASAD MOOKERJEE,

Vice-Chancellor, Calcutta University.

J. M. BOTTOMLEY,

Director of Public Instruction, Bengal.

European Schools, Bengal.

The following candidates are declared to have passed the Higher Grade Schools' Final Examination held in December 1934 :—

In order of merit.	Roll No.	Name.	School.	Distinction, if any.
		Boys—Higher Grade School.		
		Industrial Course.		
1	7	Smitts, Arnold Jajima (*a*) ..	St. Thomas' Boys' School, Calcutta	Algebra and Mensuration with Surveying.
2	4	Gale, Henry John Denzil (*b*) ..	Ditto	Algebra, Geography and Geometrical Drawing and Mensuration with Surveying.
3	11	Adshead, Douglas Arnold Laird	Ditto	Algebra and Trigonometry.
4	3	Firth, George Walker Randel	Ditto	Arithmetic and Algebra.
5	5	Inglis, Gordon Edwin Horricks	Ditto	Drawing.
6	20	Archer, William Arthur ..	St. Andrew's Colonial Homes, Kalimpong.	
6	21	Atkinson, Peter	Ditto	Arithmetic.
7	23	Graham, Walter Ernest Edmund	Ditto	Arithmetic and Practical Manual Work.
8	24	Leith, Fred Alistair ..	Ditto	Practical Manual Work.
9	1	Davies, John Lewis ..	St. Thomas' Boys' School, Calcutta	Trigonometry.
10	8	Thompson, Melville Percival ..	Ditto.	
11	6	Kerr, Lindsay Norman ..	Ditto	Practical Manual Work.
12	19	Anderson, George ..	St. Andrew's Colonial Homes, Kalimpong.	
13	12	Gasper, Hubert Lionel ..	St. James' College, Calcutta ..	Algebra.
14	2	Eden, Vernon Alexander ..	St. Thomas' Boys' School, Calcutta.	
15	13	Deefholts, Foster ..	St. James' College, Calcutta.	
16	29	Tripp, Alexander ..	St. Andrew's Colonial Homes, Kalimpong.	Practical Manual Work.
		Girls—Higher Grade School.		
		Domestic Course.		
1	32	Andrews, Eugenie (*c*) ..	St. Francis Xavier's School, Dacca	Cookery.
2	36	Appin, Florence	St. Scholastica's Convent, Chittagong.	Laundry.
3	37	D'Silva, Doris	Ditto	Laundry.
4	31	Bartels, Mabel Joyce ..	B. N. Ry. European School, Khargpur.	Cookery.
5	35	Rodrigues, Antoinette ..	St. Scholastica's Convent, Chittagong.	Laundry.
6	34	Thipthorpe, Ruby ..	Ditto	Laundry.
		Commercial Course.		
1	16	Decruz, Florence (*d*) ..	St. Agnes' School, Howrah ..	Shorthand and Typewriting.
2	17	D'Cruze, Teresa	Ditto.	

(*a*) Provisionally selected for the Exhibition of Rs. 150 payable to the first boy in order of merit.
(*b*) Provisionally selected for the Exhibition of Rs. 100 payable to the second boy in order of merit.
(*c*) Provisionally selected for the Exhibition of Rs. 150 payable to the first girl in order of merit.
(*d*) Provisionally selected for the Exhibition of Rs. 100 payable to the second girl in order of merit.

R. WOLFENDEN, *Inspector of European Schools, Bengal.*

Calcutta, the 29th January 1935.

Orders by the Inspector of Schools, Dacca Division.

The 23rd January 1935.

ERRATUM.

In this office notification, dated the 2nd October 1934, published in pages 1353 and 1357 of the *Calcutta Gazette*, dated 18th October 1934 and 25th October 1934, respectively, *for* "Niloj Kumar Ghosh" please *read* "Niloj Kumar Ghosh Dastidar."

A. H. KHAN CHAUDHURY,

Inspector of Schools, Dacca Division.

Presidency Division.

40-1A, Free School Street, Calcutta, the 25th January 1935.

Results of the Final Examinations of the Guru Training Schools held in December 1934.

Murshidabad.

Berhampur Guru Training School.

1 Meghnath Ghose.
2 Amulyaratan Roy.
3 Sastiram Biswas.
4 Md. Surat Ali.
5 Debendra Nath Mondal.
6 Kalikinkar Bhattacharya.
7 Syamapada Pande.
8 Basiruddin Biswas.
9 Baidya Nath Choudhury.
10 Md. Nasiruddin Mondal.
11 Habibar Rahman.
12 Gour Chandra Ghose.
13 Indu Bhushan Biswas.
14 Durgakanta Chakraberty.
15 Rajanikanta Ghose.
16 Arabinda Biswas.
17 Lakshmi Narayan Biswas.
18 Md. Gouhar Ali.
19 Md. Saidar Rahman.
20 Bhajakrishna Mondal.
21 Jaimuddin Ahmed.
22 Md. Yakub Nabi.
23 Md. Nural Hoque.
24 Rostum Dewan.
25 Naimuddin Khandakar.
26 Janmohammad Biswas.
27 Md. Sorab Ali Shaikh.
28 Narendra Nath Mondal.
29 Dakshina Ranjan Biswas.
30 Md. Mohiuddin Mian.
31 Benoy Bhushan Biswas.
32 Abdul Based.
33 Satkari Ghosal.
34 Md. Osman Ali.
35 Sakhshi Gopal Pramanik.
36 Hedayetulla Shaikh.
37 Syed Manwar Ali.

Kandi Guru Training School.

38 Bhudeb Chandra Roy Choudhury.
39 Abhiram Ghose.
40 Tinkari Moitra.
41 Ramendra Nath Ghose.
42 Anadiranjan Misra.
43 Syed Abdus Salam.
44 Jillar Rahman.
45 Abdul Halim.
46 Balaram Chakraberty.
47 Mokardam Hossain.
48 Serajul Huq.
49 Reasatulla.
50 Ramdas Bairaggya.
51 Mortez Hossain.
52 Kanti Kumar Bhattacharya.

Monigram Guru Training School.

53 Satyakinkar Ghose.
54 Md. Meser Ali.
55 Taragati Misra.
56 Dhirendra Nath Banerjee.
57 Nanibhushan Roy.
58 Ramkrishna Das.
59 Saktipada Kundu.
60 Prabhakar Das.
61 Feredun Huq.
62 Debnarayan Mondal.
63 Md. Bani Amin.
64 Anisar Rahman.
65 Bimal Chandra Sen Gupta.
66 Md. Rostum Ali.

Pratapgonj Guru Training School.

67 Satish Chandra Chakraberty.
68 Ramanath Ghose.
69 Kalimuddin Biswas.
70 Sachindra Nath Ojha.
71 Nesh Mohammad.
72 Md. Eshaque Mian.
73 Ahammad Ali Biswas.
74 Setabuddin Khan.
75 Abdul Aziz.
76 Anadicharan Karmakar.
77 Balaram Chandra Das.
78 Azizur Rahman.
79 Md. Eshaque.
80 Abdur Rahman.

Malihati Guru Training School.

81 Kalikinkar Mukherjee.
82 Ray Ranjan Sinha.
83 Kumarish Chandra Banerjee.
84 Saroj Kumar Nag.
85 Lalgopal Ghose.
86 Birendra Kumar Ghose.
87 Taraprasanna Banerjee.
88 Syed Abdul Gani.
89 Shaikh Ali Hossain.
90 Umedar Rahman.
91 Abdul Hasib.
92 Kishori Mohan Ganguly.
93 Dharmadas Banerjee.
94 Biswabimohan Datt.
95 Chamatkar Mondal.

Private.

96 Mokbul Hossain.
97 Basanta Kumar Pramanik.
98 Sam Mohammad Biswas.
99 Hrishikesh Mondal.
100 Gopal Chandra Das.

J. M. SEN,

Inspector of Schools, Presidency Division.

Orders by the Vice-Chancellor and Syndicate of the Calcutta University.

Senate House, the 22nd January 1935.

NOTIFICATION No. R./Pub. 388.

The following revised syllabus defining the limits of subjects under the revised regulations for the B. Com. Examination of the University as announced in this office notification No. R./84, dated the 27th July 1933, is published for general information. The revised syllabus will come into operation with effect from the B. Com. Examination to be held in 1937:—

Accountancy (Compulsory).

The following course in extension of that prescribed for Elements of Book-keeping in the I. A. Examination:

Definitions of commercial terms and various statements of account such as Balance Sheet, Profit and Loss Account, Appropriation Account, Income and Expenditure Account, Manufacturing Account, Receipts and Payments Account, Voyage Account, etc. The use of the various books of account including the Journal and the Petty Cash Book.

Principles of Double Entry Book-keeping—Preparation of Trial Balance and various statements of account including the Balance Sheet.

Single Entry—Preparation of statements under Single Entry system. Comparison with Double Entry system and drawbacks of Single Entry system. Conversion of Single Entry into Double Eentry.

Negotiable Instruments—Treatment of dishonoured and deferred bills.

Depreciation, Reserves, Reserve Funds and Sinking Funds.

Accounts Current and Average Due Date.

Goods on Sale or Return, Consignments and Joint Ventures.

Simple cases of partnership accounts, excepting dissolution of partnership but including a knowledge of Partnership Law.

Joint Stock Companies—Formation of Companies—Statutory and Statistical books—Various kinds of shares and debentures and entries relating thereto, including forfeiture of shares and debentures—Preparation of final accounts and peculiarities to be observed in the case of banking institutions. A good knowledge of the Indian Companies Act is essential.

N. B.—Questions of an advanced character may be set on the matter prescribed for Elements of Book-keeping in the I. A. Examination.

Commercial Law (Compulsory).

Commercial Law—its scope and nature.

The Law of Contract—Communication, Acceptance and Revocation —Voidable Contract and Void Agreement—Coercion, undue influence, fraud, misrepresentation and mistake—Form and Consideration—Agreements—Novation—Recission—Alteration—Appropriation of payment—Breach of contract—Termination of contract—Relationship resembling those created by contract.

Agency—Sub-Agency—Ratification—Termination of Agency—Principal and surety—Indemnity and Guarantee.

Bailment—Termination—Pawner and Pawnee—Mortgages of movable and immovable properties.

Mortgages—Simple mortgage—Mortgage by conditional sale—Hypothecation.

The Contract of Carriage—Common carrier—Railway Companies—Carriage of goods by sea and land.

Indian Partnership Act, 1932—Joint Hindu Family—Firm—Minor as partner—Registration of firm.

Indian Sale of Goods Act, 1930.

Law relating to Negotiable Instruments—Hundies—Promissory Notes and Bills of Exchange.

Law of Arbitration—Indian Arbitration Act—Arbitration under the Civil Procedure Code.

Law relating to Companies—Public and Private Companies—Memorandum and Articles of Association—Prospectus—Capital—Directors—Resolutions—General, Statutory and Extraordinary Meetings—Loans, Mortgages and Debentures—Liquidation or Winding up.

Law relating to Fire and Marine Insurance.

Law relating to Insolvency—Presidency Town Insolvency Act—Provincial Insolvency Act.

Group A—Paper (5)—General Economics—1 paper.

Definition and scope of economics—methods of study—fundamental economic concepts—wealth, utility, capital, income and value—consumption—the law of demand—elasticity of demand—wants and activities—production—factors of production—the laws of return—the law of population—modern industrial organisation—types of business organisation—industrial combination—trusts—national and international—cartels—market—theory of value—joint demand and joint supply—distribution—national dividend—rent, wages, interest and profits—labour problems—exchange—money, functions and value of money—Index numbers—credit and prices—monetary standard—monometallism and bimetallism—international gold standard—paper money—appreciation and depreciation—stabilisation—functions of banks—types of banks—reserves and investments—bank rate—central banks—international trade—international values—the law of comparative costs—distribution of precious metals—the balance of trade—mechanism of international payments—foreign exchange—fiscal policy—export and import duties—public finance—equity in taxation—incidence of taxation—direct and indirect tax—progressive and proportional tax—economic functions of the state.

Group A—Paper (6)—Indian Economics—1 paper.

Geographical factors—physical factors affecting the economic life of the people.

Special factors—village system and rural economy—caste—its economic significance—joint family—laws of inheritance—status and custom—organisation of agriculture, handicrafts and domestic industries of India—caste guilds—city industries—Mahomedan guilds—indigenous organisations of trade, transport, banking and agricultural credit.

Political factors—Pax-Britannica—its economic effects—chief British Indian systems of land tenure—their economic consequences—political relation of India to England—effect on balance of trade.

Consumption—standard of life—comparison with other countries—statistics of consumption.

Production—principal crops—output in India and abroad—features of Indian agriculture—fragmentation and subdivision of holdings—agricultural indebtedness—pressure of population on land—economic transition in India—growth of large scale industries—efficiency of labour—technical education—labour legislation—capital requirements—foreign capital.

Distribution—national income—per capita income—rent as affected by state landlordism—by permanent settlement—tenancy legislation—custom—wages of different occupations—average wage rates—real wages—profits—commercial and industrial.

Exchange, Currency and Banking—history of Indian currency—Currency Committees and Commissions—Paper Currency System—history of Indian prices.

Main constituents of the Indian banking system—Reserve Bank—Imperial Bank—Exchange Banks—Indian joint stock banks—indigenous bankers—bill market—Industrial banks—land mortgage banks—co-operative banks.

Public Finance—Sources of Revenue and heads of expenditure—Central and Provincial—Home charges—Public Debt—finances of Bengal and Assam—Local Finance.

State and Industry—Industrial Policy—Tariffs and Transport—Import and Export duties—Cotton excise controversy—Discriminating protection—Imperial Preference—Protection to Steel, Cotton Textile and Sugar Industries—Railways and Shipping.

Group B—Paper (7)—Business Organisation—1 paper.

Economic basis of trade and industries—classification of trade and industries—scale of business units.

Different forms of business organisation and tests of their efficiency—individual proprietorship—partnership—joint stock companies—co-operative societies—federation organisations—pools—trusts—cartels—holding companies—amalgamation.

General knowledge of organisation and management of factory—considerations for laying out a factory—division of labour—various departments—control—different forms of wages—efficiency of labour—how to improve it—elementary cost accounting and costing methods.

Organisation of office—various departments—co-ordination—labour-saving devices—codes.

Organisation of trade—home, foreign—wholesale and retail—departmental store—multiple shops—co-operative societies—broker—and middlemen—their functions and remuneration—mail-order business—salesmanship.

Tariffs—customs—and commercial pratices in different countries.

Financing of trade and industries—Central Banks—Commercial Banks—Industrial Banks—Co-operative Banks—Agricultural Banks—Stock exchanges—Investment Trusts—various methods of inland and foreign remittances—methods of financing trade in different countries.

Produce Exchanges—Transaction in futures—Speculation.

Scientific Advertisement.

Insurance Organisation—Various methods—Warehouses.

Organisation of chief industries and trades of India.

Preparation of Commercial instruments—Secretarial practice.

Institutions both state and private for the furtherance of trade—Representation of commercial interest in foreign countries.

Market quotations and market reports.

Group B—Paper (8)—Commercial Geography—1 paper.

Why we should study Economic Geography—its nature and scope—relation to other sciences.

Physical factors bringing about variation in the economic life of a people.

Non-physical causes affecting economic life—race—religion—Government—density of population—historical usage and customs—geographical inertia.

Different industries of the world—hunting—pastoral—mining—agricultural—manufacturing—factors bringing about localisation.

Different methods of transport—land—water—air—their advantages and disadvantages—routes of international importance—causes that bring about changes in the volume and direction of traffic.

Development of ports and inland trade centres—principles and illustrations.

Coins and currencies of important countries of the world—weights, units of sale and units of shipment of principal commodities to and from various countries.

Geographical distribution of principal commercial commodities—conditions affecting their production and carriage—their chief markets.

Economic Geography of the principal countries of the world—climate, soil, etc.—distribution of population—principal economic products—chief industries—ports and cities—communications—trade balance and trade relationship.

Economic Geography of India in detail.

Economic Zones—their prospects and possibilities.

Prospects of economic development of different countries.

Group C—Papers (9) and (10)—Advanced Accountancy—1 paper. Auditing—1 paper.

Advanced Accountancy.

The following course in extension of that prescribed for the compulsory paper on Accountancy:—

Self-balancing ledgers.

Departmental Accounts, Branch Accounts and Foreign Exchange.

Double Accounts.

Higher portions of Partnership Accounts including dissolution of partnership. A very thorough knowledge of the Partnership Act is essential.

Higher portions of Joint Stock Company Accounts, including Bonus Shares, Reduction of Capital and Redemption of Debentures, Amalgamation and Reconstruction of Companies. A thorough knowledge of the Indian Companies Act will be presumed.

Bank and Insurance Accounts.

Royalty Accounts—Hire purchase accounts—Instalment payment purchase accounts—Investment Accounts and Stock exchange transactions.

Miscellaneous Accounts including insurance claims—treatment of life policy taken over in satisfaction of debt due—Marine Insurance Accounts—Accounts of Charitable Institutions.

Bankruptcy and Liquidation.

N. B.—Questions of an advanced character may be set on the subject matter prescribed for the compulsory paper on Accountancy.

Auditing.

Meaning and Object of Audit—qualifications which an Auditor must possess.

Audit of the books of original entry and the different ledgers—verification of assets and liabilities. Internal checks.

Audit of Trading and Manufacturing Accounts—Profit and Loss Account and Balance Sheet.

Special considerations in different classes of audit—Audit of accounts of sole traders, firms and companies.

Divisible profits and dividends.

Liability of Auditors.

Investigations.

Note.—Some important case laws to be prescribed from time to time by the Board of Higher Studies in Commerce.

Group C—Papers (9) and (10)—Trade and Tariff—1 paper. Transport—1 paper.

Trade and Tariff.

Meaning of Trade—what it consists of—classification of trade—necessity for different classes—their evolution and present tendency.

Distinction between inland trade and foreign trade—their relative importance in different countries—theory of comparative costs—international values.

Procedure for export and import trade—for inland trade—documents used—invoice—bill of lading—charter party—railway receipt—insurance policy, etc.

Customs formalities—bonded warehouse—warehousing.

Financing of trade—both inland and foreign—foreign exchanges—bill of exchange—letter of credit—methods of financing trade in different countries.

Institutions for the furtherance of trade, both State and private—representation of commercial interests in foreign countries.

Review of trade—recent tendencies.

Market quotations and market reports.

Economic arguments for free trade—Qualifications to above arguments.

The rationale of protection—Diversification of Industry Argument—Infant Industry Argument—National Self-sufficiency Argument—Dumping and stability of production—Anti-dumping legislation—Bounty *vs.* Import duty.

The evils of protection—burden on consumers—tariffs and trusts—tariffs and inefficient methods of production—effect of tariff on the distribution of wealth.

Protective and Revenue Duties—Import Duties—their incidence—the effect of Import Duties on the price of dutiable articles.

Export duties for revenue and protection—consideration of the Indian export duties.

Reciprocity, Retaliation and Preference—Preference within the British Empire—India and Imperial Preference—Ottawa Agreement.

Problems of tariff administration—comparative merits of *ad valorem* and specific duties—administrative difficulties connected with *ad valorem* duties—problems of valuation.

The development of commercial policy in India—the Indian Import duties in revenue and protective aspects—the Cotton Excise Controversy—the post-war developments in Indian fiscal policy—policy of discriminating protection—Indian tariff problem in relation to cotton, steel and sugar industries.

Transport.

Organisation—Organisation of rail, road and water services—State ownership and State control of modern railways—capital and revenue expenditure on railways—railroad construction finance—pooling and agreements—classification of roads, and road maintenance—problem of road power—condition of carriage by railways as common carriers—the Carriar's Act—the rights and obligations of the consignors and the consignees under the Carrier's Act—the carriage of persons and animals by railways—passenger's luggage.

Rates and Regulations—Railway traffic—goods and passenger—passenger fares—passenger tickets—theory of railroad charges—railway rate making in practice—competitive rates—flat rates—discriminations—problems of special rates—problems of routing—rate wars—port rates and wagon load rates—adjusted and differential rates—terminal charges and block rates—reasonable rates—standard charges—Government control over railway rates—British railways in and after the Great War—U. S. A. railways—Long and short haul classes in railway rates making.

Indian Railways—Lord Dalhousie and Sir John Lawrence in the shaping of the Trunk line in Indian railway systems— the Whitehall in the Indian railway development of the 19th century and after—Government control over the Indian Railways—the Railway Board as organ of Government control—gauge problems and the problems of minimum rates over the Indian Railways—freight classifications and the Indian Railways Conference Association, the shaping of the freight structures for the Indian Railways—competition and co-ordination between the Indian Railways in rates making. Problems of discriminative rates and co-ordinated freight tariff over the Indian Railways—Problem of reasonable rates and undue preference over the Indian Railways.

State purchase and State construction of the Indian Railways—The Indian guaranteed and the Branch Line Railways finance—The McKay, the Acworth, and the Inchcape Committees in the financial reorganisations of the Indian Railways—The Acworth Committee on the State managements of the Indian Railways and provisions for their capital supply—The Acworth Committee on the new reforms over the Indian Railways. The Indian Railway Act—The Indian Railways Rates Advisory Committee—The Indian Railways Rates policy in the shaping of the Indian industries.

Group C—Papers (9) and (10)—Banking—1 paper. Currency—1 paper.

Banking.

Banking Theory—Functions and economic services of banks—Types of banks—Commercial Banks—Exchange Banks—Industrial Banks—Savings Banks—Agricultural Banks.

General structure and methods of commercial banking—working capital—deposits—cheques—bank drafts and inland remittances—the management of banking resources—the short-term loan fund—market rate of discount—Loans and Advances—Investments—Acceptances—Cash Reserves—Recent tendencies of commercial banks—Amalgamation—Branch banking.

Constituent elements of the Money Market—Clearing House—Comparative study of the Big Five—the D's of Germany—The National Banks and State Banks of America—The Commercial Banks of India—The Imperial Bank of India—the indigenous bankers and their services—Principal credit instruments used in indigenous banking.

Decentralised and Centralised banking systems—Functions of the Central Bank—Co-operation with the other Central Banks—Monetary stabilisation through C. B. action—The Bank of England—The Federal Reserve system—the Reichsbank—The Bank of France—The Reserve Bank of India—The Bank for International Settlements—Canadian Banking system.

The Stock Exchange—its relation to the banking system—Speculation—Functions of the speculative dealers—the bulls and bears—the constitution of the Bombay and the Calcutta Stock Exchanges—Modern problems connected with them—The effects of Government borrowing on the Indian Money Market.

Foreign Exchange—the theory of Foreign Exchange—the means and mechanism of payment—fluctuations in the exchange rates—commercial

bills of exchange—bank bills—finance bills—the letter of credit—London Acceptance Credit—Exchange arbitrage—the Arithmetic of Foreign Exchange—Reading of Money Market Article.

Banking practice—Relations between the banker and the customer—the deposit account—current account—cheques and bills of exchange—personal elements and securities—collection of bills and cheques—discounting of bills—daily Balances—the general ledger—deposit receipt—purchase and sale of stocks and shares—Foreign Exchange business—gratuitous services.

Bank Management—Powers and duties of directors, shareholders and managers—bank officers—cashier—inspectors, etc.—Banking Organisation—Chartered Banks—Incorporated Banks—private banks—Indian Companies Act—The different types of bank accounts.

Banking law—Banker and the Customer—Banker's entries in the Pass Book—Paying Banker and the Collecting Banker—the Negotiable Instruments Act—Bankers and the guarantee—Legal and equitable mortgage—Bank's hold over different securities—Banker's lien and pledge—Banker's Book Evidence Act—Banking Legislation in America and India.

General Banking Statistics—The Bank balance-sheet, capital, reserve, deposits, total and immediate liabilities—proportion of cash as against outstanding liabilities—profitable and non-profitable assets—Clearing House Figures—Bank rate and Market rate.

Currency.

The Economic Importance of Money—Definition of Money—Origin of Money—Functions of Money—Qualities of good money materials.

Evolution of Metallic Money and Coinage—Requisites of good coinage—limit of tolerance—seigniorage—brassage—gratuitous and free coinage—Mint price of gold—different types of Money—Standard Money—Token money—principles of token coinage—Representative paper Money—Fiat Money—Convertible and inconvertible paper money—deposit currency—Methods of regulation of note-issue—Gresham's law—Characteristics of a good currency system.

Value of Money—Quantity theory—measurement of changes in the value of money—Economic consequences of rising and falling prices—Price movements in the 19th and 20th centuries—Prices and international movement of specie—Monetary stability.

Monetary standards—Monometallism—Bimetallism—Gold-exchange standard—Gold bullion standard—Symmetallism—Tabular standard—Currency inflation and credit inflation—The effects of inflation—Restoration of the international gold standard—Deflation and devaluation—Suspension of the gold standard—Money and Business Cycles.

The Monetary System of India—Coinage Act of 1835—Agitation for gold currency—Development of Government paper currency—Fall in the value of silver—Its consequence—Herschell Committee—Closure of the Mints—The Fowler Committee—The Evolution of the G. E. Standard—The Chamberlain Commission—Effects of the War on Indian Currency and Exchange—Break-down of the Gold Exchange Standard—The Babington Smith Committee—The Hilton-Young Commission and the ratio controversy—The Currency Act of 1927—The suspension of Gold Standard—The linking of the rupee to sterling—Gold exports during 1929-33—Purchase and sale of sterling—Government reserves for maintaining the value of currency—The gold standard reserve—The Cash balances—Government as the currency authority and exchange banker—Government's method of expanding and contracting currency.

Group C—Papers (9) and (10)—Statistics—1 paper. Insurance—1 paper.

Statistics.

Definition and historical development of statistical science.
Its uses, characteristics and sources.
Collection and analysis of data.
Definition, tabulation and formulation of Problems.
Frequency distribution and Graphs.
Graphical methods and interpolation.
Types and averages; weighted mean, its significance and use.

Dispersion; moments; standard deviation.

Time series, mortality tables, moving average, trend and fluctuation.

Index numbers and their uses.

Use of slide rules and other machines for tabulation, and sorting, such as comptometer, etc.

The main sources of official statistics, their character and meaning.

Insurance.

Insurance in general—its origin and uses. Insurance as a factor in business.

Fundamental principles of Insurance—Necessity of insurance and nature of insurable interest. Difference between insurance and gambling. The law of average in its application to insurance. Differences between life and other forms of insurance.

Under-writing of Insurance—Risks—Mortality Tables.

Life Insurance Premiums—Number of ways in which premium payment can be made, and the merits of the current ones. Basis of premium calculations.

Reserves, surrender and paid-up values and loans against policies. Assignment of policies.

Policy reserve.

Solvency Reserve *vs.* Reserve when the valuation is undertaken with a view to distribute profits.

Basis of Valuation.

Investments—Types of investments usually chosen by Life offices.

Types of Insurance Organisations (Mutual, proprietory, etc.) and classes of insurance combined with life assurance, such as Disability Insurance.

Types of Insurance Policies—Annuities.

Organisation of Insurance business.

Insurance Law—Provident Insurance Societies Act, 1912. Indian Insurance Companies Act, 1913, and Indian Insurance Companies Act, 1928, and the rules framed thereunder—Returns.

Elements of the Law and Practice of—

(*a*) Marine Insurance,

(*b*) Miscellaneous Insurance.

Re-Insurance.

Group C—Papers (9) and (10)—Public Administration—1 paper. Public Finance—1 paper.

Public Administration.

Fundamental concepts.

Meaning of Constitution—characteristics of the English Constitution—its constituent elements.

The Executive—the Crown—powers of the Crown—the prerogative—Nature and functions of the Cabinet—Ministry—Privy Council—Ministerial responsibility—the War Cabinet—Cabinet Secretariat—Cabinet Committee of Imperial Defence.

Ministers and the Permanent Civil Servants—Government Departments.

The Legislature—the franchise—functions of the House of Commons—its privileges—legislative procedure—House of Lords—its composition and functions—The Parliament Act of 1911.

The Judiciary—organisation of the courts—Rule of Law—Liberty of the subject—Law and Equity.

Local Government System—Powers and duties of local authorities—local taxation—nature of local expenditure—Ministry of Health.

Federations and Unions—Outline of the constitutions of Canada, South Africa and Australia—Imperial Co-operation during the War—Imperial Conference—Colonial Laws Validity Act—Statute of Westminister—Crown Colonies, Protectorates and Mandated territories.

Government of India—A brief historical survey of the development of the Indian Constitution—the Secretary of State for India and his Council—control of the Secretary of State over administration—The

Governor-General and the Executive Council—Central and Provincial subjects of administration—The Governor—his Executive Council and the Ministry—the dyarchy.

The Legislature—The Central Legislature—its powers and functions —provincial legislature—its control over administration and finance.

The Judiciary—organisation of the courts.

Indian States—The constitutional relation between the States and the Government of India.

Public Finance.

Introductory—The nature of Public Finance—Principles of Public Expenditure—Central and local expenditure—division of financial duties between State and local bodies.

Public Revenues—Commercial governmental revenues—principles underlying Government industrial enterprise—Tax—Revenues—The problem of justice in taxation—Taxable capacity—Double Taxation—shifting and incidence of taxation—Taxes on Income and Taxes on Property—Taxes on commodities—Taxes on Transactions—Taxes on corporations.

Central and Local Taxation.

Public Debts—its nature and necessity—forms of Public debts—conversion—re-payment of public debts.

Indian Finance—A study of Indian Taxes in general—allocation of resources between Central and Provincial Governments—Indian Public Debts.

Financial Administration in India and Great Britain.

Group C—Papers (9) and (10)—Land systems—1 paper. Agricultural Economics—1 paper.

Land Systems.

Land Tenure—Types of Land Tenure in India—its nature—Occupancy and Non-occupancy Ryots—Sub-proprietory and tenant rights.

What is a Settlement? Principles and requisites of a settlement—classification of settlements—General outline of settlements in British Beluchistan, Madras, Burma, Bombay, the United Provinces, Punjab and Central Provinces. Special settlement—Tea and Coffee Estates, Rubber Estates in Burma and Khasmahals. Permanent Settlement in Bengal—Its objects and results. Position of the Zemindars before and after the settlement—Government and Ryots—The relation between Zemindars and Ryots. Tenancy Acts—Subinfeudation—Criticism and suggested remedies.

Ownership of land—State *vs.* Individual—Land Revenue; a Tax or Rent? Ricardian Theory in relation to land revenue in India. Application of the principles of taxation to land revenue—Legislative control —Progress of Land Revenue Legislation.

A brief description of land tenures in the Western countries.

Problems in regard to Nationalisation of land. Re-distribution of Holding.

Agricultural Economics.

Factors of Production—Land, physical conditions with special reference to Bengal and Assam—Tenure—present law of land tenure—Rules of good husbandry—Size and character of Holdings—Economic unit of farms, arrangement of farms with special reference to Bengal—Family farms—Large scale farming—Government model farms.

Open field system—enclosure system—Arable and Grass farms.

Farm equipment, permanent and temporary—Animal and mechanical power.

Labour cost—agricultural wages—Index number of wages—Harvest prices and Wages—Wages in agriculture and in industry.

Management, technical and economic—Purchase of requisites—Co-operative buying.

Cost of Production—Rent, Interest on capital, expenditure on land and implements, local rates and cesses—wages—current expenses—seed —fertilisers—feeding stuffs.

Farm Accounts.

Live-stock and Fertility maintenance.

Marketing—Methods of disposal—consumption by producers—direct sale—sale through intermediaries, the system of "dadan" in Bengal and Assam—co-operative marketing—co-operative marketing in U. S. A., Denmark, Canada, Australia and Japan—recommendations of the Jute Enquiry Committee.

Markets—Fairs and *melas*—modern market—the cotton market in Berar and Amalnir—the organisation of various trade, especially Rice, Wheat, Jute and Cotton. Dealing in Futures. Essential services in large scale marketing—Grading.

Prices—conditions affecting supply and demand of Rice, Wheat, Jute and Cotton—Price variations—seasonal fluctuations—Index number of agricultural prices—monetary causes of price variations—Control and regulation of produce—Recommendations of the Jute Enquiry Committee.

Village Economic Survey.

Agricultural indebtedness—co-operative credit societies—land mortgage banks—Debt conciliation—regulation of the rate of interest.

Rural industries subsidiary to agriculture.

Group C—Papers (9) and (10)—Economic History—1 paper. Modern Industrial Organisation with special reference to India—1 paper.

Economic History.

Elizabethan England—Policy of Burleigh—Trade and Trading Companies—Colonisation—Agriculture and Industry on the eve of the Industrial Revolution—Industrial Revolution—Agricultural Revolution—Inland and Oceanic Transport—Labour Movement—Labour Legislation—Poor Law Reform—Origin and Growth of Banking—Free Trade Movement—Agricultural Decline. Protectionist Reaction. Co-operative Movement. Industrial Combinations.

Modern Industrial Organisation with special reference to India.

General industrial economy—Organisation of Industries—Handicraft system—Guild System—Domestic system—Factory system—Importance of Machinery—The place of Labour—Modern marketing organisation—Modern large scale industries—Geographical causes of their existence—The Importance of raw materials—Mobility of the factors of production—International Capital market—Industrial finance—Monopolistic tedencies—Trusts and Cartels—Labour organisation—Labour legislation—Industrial disputes—The problem of minimum wage—Arbitration—Joint Industrial Councils—Industrial Education.

Industrial organisation of India—Study of occupations—Importance of agriculture—Agricultural organisation—Systems of land tenures—Agricultural Finance—Co-operation—Agricultural Labour—State and Agriculture.

Cottage Industries—Decline of handicrafts—Growth of large-scale industries—Industrial deficiencies—Special advantages—Raw material and other natural resources—The problem of power—Industrial labour—Efficiency of labour—Labour movement—Labour legislation—Technical education—Foreign capital and management—Special study of the development of Cotton, Jute, Iron and Steel, Coal and Leather Industries—Industrial Finance—State and Industry—Fiscal Policy and Indian Industries.

J. CHAKRAVORTI, *Registrar.*

Orders by the Vice-Chancellor and Syndicate of the Calcutta University.

NOTIFICATION No. T. 389.

Senate House, the 30th January 1935.

LAW EXAMINATIONS, 1936 AND 1937.

Text-books, Acts and Statutes to be studied in accordance with the syllabus laid down in the Regulations.

N.B.—(1) In all cases where reference is made to Chapters, Sections, Pages or Lines (thus Chapters I-III), the reference is to be understood as inclusive.

(2) All references in Acts include the latest amendments made.

Preliminary Examination in Law in July 1936 and January and July 1937.

Jurisprudence.

Holland's Jurisprudence, Maine's Ancient Law (edited by Sir F. Pollock).

Note.—Students are recommended to consult Salmond's Jurisprudence.

Roman Law.

Bagchi's Roman Private Law, Second Edition, Digest IX, 2 Lex Aquilia (English Translation by Monro, Cambridge University Press, or by Gruebar, Oxford Press), Maine's Ancient Law (edited by Sir F. Pollock).

Hindu Law.

Mitakshara, Chapter I, Sections 1-5, Chapter II, Sections 1-10, Dayabhaga, Chapters 1, 2, 5 and 11, Mayne's Hindu Law and Usage, Golapchandra Sarkar's Hindu Law, new edition, Rajkumar Sarbadhikari's Law of Inheritance (Tagore Law Lectures), new edition, Chapters XI-XVI, both inclusive, Mullah's Hindu Law, University Selection of Leading Cases.

Constitutional Law.

Handbook of English Constitutional Law, by Jyotiprasad Sarbadhikari, M.A., B.L., second edition. Dicey's Law of the Constitution. University Selection of Leading Cases.

Note.—Students are recommended to consult Thomas' Leading Cases in Constitutional Law (new edition).

Intermediate Examination in Law in July 1936 and January and July 1937.

Muhammadan Law.

Sirajia (except the details as to succession of distant kindred). Amir Ali's Students' Manual of Muhammadan Law or Mullah's Principles of Muhammadan Law (omitting the details as to the sections of distant kindred). Selection of Leading Cases.

The Law relating to Persons.

Act XX of 1875 (Majority), Campbell's Principles of English Law, Chapters IV, V, VIII, XII-XV, University Selection of Leading Cases.

The Law relating to Property.

(*a*) The Law of Transfer *inter vivos*, Act IV of 1882 (Transfer of Property Act), as amended by Acts of 1929 and 1930, Act XVI of 1908 (Registration), Sections 17, 18, 48, 49, 50. University Selections of Leading Cases.

(*b*) Principles of the English Law of Real Property and the Law of Intestate and Testamentary Succession (exclusive of the Hindu and the Muhammadan Law of Intestate Succession), Williams' Principles of the Law of Real Property, 24th edition, which contains the amendments in the Law of Real Property effected by Lord Birkenhead's Act with which the students are expected to be familiar. Introduction, Part I, Part II, omitting Chapters VII, IX and XI, Part III, Part VI. Indian Succession Act (XXXIX of 1925), omitting Parts IV, V, VII and X. University Selection of Leading Cases.

Note.—Students are recommended to consult Topham's New Law of Property (third edition), omitting Chapters VIII, XII, XIV, XVI, XXVI-XXVIII and XXX-XXXVIII.

The Law of Contracts and Torts.

Anson's Law of Contract, Pollock on Torts, Act IX of 1872 (Contract Act), Salmond's University Selection of Leading Cases, Sale of Goods Act, Partnership Act.

Students may consult the following book:—

The Principles of Law of Contract, by M. N. Kanjilal.

Final Examination in Law in July, 1936 and January and July 1937.

The Law relating to Property.

(1) The Law of Land Tenures, Land Revenue and Prescription, Regulation I of 1793, Preamble to Regulation II of 1793. Regulations VIII, XIX, sections 1-7, XXXVII, sections 1-3 of 1793, VIII of 1819, XI of 1825. Act VIII of 1885 (Bengal Tenancy Act), as amended by Act IV of 1928, Chapters I-VIII, XI, XIV, Act XI of 1859, Act XV of 1877, sections 26-28. Upendranath Mitra's Indian Law of Prescription and Easements, Field's Introduction to the Bengal Regulations (portions relating to Land Tenures), Saradacharan Mitra's Tagore Law Lectures, University Selection of Leading Cases.

(2) The Principles of Equity including the Law of Trusts, Maitland's Lectures on Equity, Chapters I-XXI. Brett's Leading Cases on Equity, Snell and Bagchi—Principles of Equity for the use of Indian Students and Practitioners, University Selection of Leading Cases.

Note.—Students are recommended to consult Petride's Students' Cases with a view to elucidate the cases mentioned in the text-books.

(3) The Law of Evidence and the General Principles of Civil Procedure and Limitation Act I of 1872 (Evidence Act), V of 1908 (Civil Procedure), sections 1-158, Schedule I, Orders I-X, XIV, XV, XVIII, XX, XXI-XXIII, XXX-XXXIII, XXXIV-XXXV, XXXIX-XLI, XLII, XLIII-XLV, XLVI, XLVII, Schedule II, Act IX of 1908 with Amendments, sections 1-25, Best on Evidence, Introduction, Books I, II and III, Part I, University Selection of Leading Cases.

(4) The Law of Crimes and the General Principles of Criminal Procedure, Act XLV of 1860 (Penal Code), Chapters I-V, and such portions of Chapters VI-XXIII as do not relate exclusively to the

amount of punishments to be inflicted for an offence, Act V of 1898 (Criminal Procedure), omitting Chapters 1, IX, XIV, XXXIII-XL, XLII, XLIII, XLVI, except section 562, Kenny's Criminal Law, University Selection of Leading Cases.

Leading Cases.

The following Leading Cases are prescribed to be studied in the original judgments as expositions of important legal principles in connection with the different subjects for the Law Examinations in July 1936 and January and July 1937.

N.B.—Candidates are required to possess a detailed knowledge of the cases marked with asterisks.

Preliminary Examination in Law.

Hindu Law.

Amarnath *v.* Firm of Hukumchand, 33 C.L.J. 355 P.C.
*Bhoobanmoyee *v.* Ramkishore, 10 M.I.A. 279.
Buddha Singh *v.* Laltu Singh, 42 I.A. 208.
Manikyamala *v.* Nandakumar, 33 Cal. 1306.
Bhugwandeen Doobey, *v.* Myna Baee, 11 M.I.A. 487.
*Brijnarain *v.* Mangala Prosad, 28 C.W.N. 253 P.C.
Chotay Lal *v.* Chunno Lal, 6 I.A. 15.
*Collector of Madura *v.* Mootoo Ramlinga, 12 M.I.A. 397.
Deviprasad *v.* Golap Bhagat, I.L.R. 40 Cal. 721.
*Guru Govind Shah *v.* Ananda Lal, 5 B.L.R. 15.
Harikishen *v.* Kashipershad, 42 I.A. 64.
Hiralal *v.* Tripura, 40 Cal. 615.
*Hanuman Prosad *v.* Babooee Koonwaree, 6 M.I.A. 393.
*Jotindramohon Tagore *v.* Ganendramohan Tagore, L.R.I.A. Sup. Vol. 47; 18 W.R. 359.
Katama Natchiar *v.* Raja of Shivaganga, 9 M.I.A. 543.
Moniram Kolita *v.* Kerry Kolitany, 7 I.A. 115.
Nagnidas *v.* Bachoo, 43 I.A. 56.
Omrit Kumaree *v.* Lukhee Narain, 10 W.R. 76 F.B.
Rajani *v.* Netai, 32 C.L.J. 333.
*Ramchandra *v.* Vinayak, 41 I.A. 290.
Saradaprasanna Ray *v.* Umakanta Hazari, 50 Cal. 370.
*Rangaswami *v.* Nachiappa, 46 I.A. 72.
Sri Balusu *v.* Sri Balusu, 26 I.A. 115.
Sri Madana *v.* Sri Purushothama, 45 I.A. 150.
Suraj Bansi *v.* Sheo Prosad, 6 I.A. 88.
*Shyamacharan Chattopadhyay *v.* Sricharan Chattopadhyay, 56 Cal. 1135 (Mitter J.)
*Monohar Mukherjee *v.* Bhupendranath Mukherjee and others, 56 C.L.J. 468, 37 C.W.N. 29 F.B.
Amarendra Man Singh Brahmarbar Ray and another *v.* Sanatan Singh and others, 57 C.L.J. 503, 37 C.W.N. 938.

Constitutional Law.

*Ashby *v.* White, 2 Lord Raymond 938; 1 Sm. L.C. 291; 14 St. Tr. 695.
Bradlaugh *v.* Gossett, (1884) 12 Q. B.D. 271; 53 L.T. 620.
Bushell's Case, 6 St. Tr. 999.
Darnel's Case, 3 St. Tr. 1.
*Empress *v.* Burah, I.L.R. 3 Cal. 73 F.B.; on App. 4 Cal. 172.
Entick *v.* Carrington, 19 St. Tr. 1030.
*Feather *v.* The Queen, 6 B. & S. 257.
Hampden's Cases, 3 St. Tr. 825.
Hanoverian Elector's Case, 17 Q.B.D. 54 (1886).
Howell's Case, 2 Mod. 219.
*Marais, Ex parte, [1902] A.C. 109.
*Musgrave *v.* Pulido, (1879), 5 App. Cas. 102.
Rogers *v.* Dutt, 13 Moo. P. C. 209.

Secretary of State *v.* Moment, 40 I.A. 48.
Seven Bishops' Case, 12 St. Tr. 183.
Spooner *v.* Juddo, 4 M.I.A. 353.
Stallman, in re, I.L.R. 39 Cal. 164.
*Stockdale *v.* Hansard, 9 Ad. & E. 1.
Wall's Case, 28 St. Tr. 51.
*Wise *v.* Dunning, [1902] 1 K.B. 167.
*Girindranath Banerjee *v.* Birendranath Pal, 31 C.W.N. 593.

Intermediate Examination in Law.

Muhammadan Law and Law relating to Persons.

*Ashrufoodwlah *v.* Hyder Hossein Khan, 11 M.I.A. 94.
Baker Ali Khan *v.* Anjuman Ara Begam, L.R. 30 I.A. 94; 7 C.W.N. 465.
Ranee Khujooronissa *v.* Roushun Jehan, L.R. 3 I.A. 291; 2 Cal. 184.
*Abraham *v.* Abraham, 9 M.I.A. 105.
*Udny *v.* Udny, L.R.Sc. and D. 441.
*Skinner *v.* Orde, 14 M.I.A. 309.
Piers *v.* Piers, 2 H.L.C. 331.
Casdagli *v.* Casdagli, L.R. (1919) A.C. 145.
Sadik Hossen *v.* Hashim Ali, L.R. 42 I.A. 242.
Digambar Singh *v.* Kunwar Ahmad, L.R. 42 I.A. 10; 21 C.L.J. 237.
*Imambandi *v.* Haji Mutsaddi, L.R. 45 I.A. 73; 28 C.L.J. 409.
Rani Bhagwan *v.* Jogendrachandra Bose, L.R. 30 I.A. 249; I.L.R. 31 Cal. 11; 7 C.W.N. 895.
Kali Baksha Singh *v.* Ramgopal Singh, L.R. 41 I.A. 23; I.L.R. 36 All. 81; 19 C.L.J. 182 P.C.; 18 C.W.N. 282 P.C.
*Besant *v.* Narayaniah, L.R. 41 I.A. 314; I.L.R. 38 Mad. 807; 20 C.L.J. 253 P.C.; 18 C.W.N. 1089 P.C.
*Abadi Begum *v.* Kaniz Zainab, 54 I.A. 33.
*Enatullah *v.* Kowsher Ali, 54 Cal. 266 S.B.

Law of Transfer—Inter Vivos.

*Bellamy *v.* Sabine, 1 De G. and J. 566.
Rajkishan Mookerjee *v.* Radhamadhab Haldar, 21 W.R. 349.
Ishanchandra Das Sircar *v.* Bishu Sirdar, I.L.R. 24 Cal. 825.
Chandicharan Baruya *v.* Siddheswari Debi, I.L.R. 16 Cal. 71; L.R. 15 I.A. 149.
Rajakishen Datta Ram *v.* Raja Mamtax Ali Khan, I.L.R. 5 Cal. 198; L.R. 6 I.A. 146.
*Gokuldas Gopaldas *v.* Puranmal Premsukhdas, I.L.R. 10 Cal. 1035.
Moheshlal *v.* Mohanto Bawan Das, I.L.R. 9 Cal. 961.
*Noakes & Co., Ltd. *v.* Rice (1902) A.C. 24.
*Lal Achal Ram *v.* Kazim Hussain Khan, I.L.R. 27 All. 271; L.R. 32 I.A. 113.
*Beniram *v.* Kundanlal, I.L.R. 21 All. 496.
Tailby *v.* Official Receiver, 13 App. Cas. 523.
Hakim Lal *v.* Mooshahar Sahu, I.L.R. 34 Cal. 999; 23 C.L.J. 406.
*Gurudeo Singh *v.* Chandrika Singh, I.L.R. 36 Cal. 193.
*Jadunath Poddar *v.* Ruplal Poddar, I.L.R. 33 Cal. 967.
Petherpermal Chetty *v.* Muniandy Servai, I.L.R. 35 Cal. 55.
Gurunarayan *v.* Sheolal, L. R. 46 I.A. 1; 46 Cal. 566 P.C.
*Kreglinger *v.* New Patgonia Co., L.R. 1914 A.C. 25.
Mahamaya *v.* Haridas Haldar, I.L.R. 42 Cal. 455.
Ma Yait *v.* Official Assignee, 57 I.A. 10.

Law of Real Property and Succession.

*London and South Western Railway Co. *v.* Gomm, 20 Ch.D. 562.
*Morley *v.* Bird, 3 Ves. 629; 4 R.R. 106.
*Sajid Ali *v.* Ibad Ali, I.L.R. 23 Cal. 1.
In re Rosher, 26 Ch.D. 801.
Alangamonjori *v.* Sonamoni Dabee, I.L.R. 8 Cal. 637.

Bhagabati Barmanya *v.* Kalicharan Singh, I.L.R. 32 Cal. 992.
*Narendranath Sircar *v.* Kamalabasini Dasi, I.L.R. 23 Cal. 563.
*Bai Motibahu *v.* Bai Mamubai, I.L.R. 21 Bom. 709.
Ramlal Mookerjee *v.* The Secretary of State for India in Council, I.L.R. 7 Cal. 304.
Mirza Kurratulain Bahadur *v.* Peara Saheb, L.R. 32, I.A. 244.
*Sailajaprasad Chatterjee and others *v.* Jadunath Bose, 21 C.L.J. 88.
Keech *v.* Sandford, (1726) 2 Wh. & T. 693.

Law of Contracts and Torts.

Barwick *v.* English Joint Stock Bank, L.R. 2 Ex. 259.
Canadian Pacific Railway Company *v.* Roy, (1902) A.C. 220.
Coggs *v.* Bernard, 1 Sm. L.C. 167; 2 Lord Raymond 909.
Dhanipal Das *v.* Raja Maneshar Baksh Singh, L.R. 33 I.A. 118; I.L.R. 28 All. 520; 4 C.L.J. 1.
Hadley *v.* Baxendale, 9 Exch. 241; 96 R.R. 742.
*Cundy *v.* Lindsay, L.R. 3 App. Cas. 459.
*Smith *v.* Baker, [1891] A.C. 325.
Mogul Steamship Co. Ltd. *v.* McGregor Gow & Co., 1892 A.C. 25.
Mohori Bibee *v.* Dhurmadas Ghosh, I.L.R. 30 I.A. 114; I.L.R. 30 Cal. 539.
Quinn *v.* Leathem, (1901) A.C. 495.
Ram Coomar Coondoo *v.* Chunder Canto Mookerjee, L.R. 4 I.A. 23, 2 App. Cas. 186; I.L.R. 2 Cal. 233.
Smith *v.* Hughes, L.R. 6 Q.B. 597.
*Derry *v.* Peek (Judgment of L. C. Herschell), L.R. 14 App. Cas. 337.
Armory *v.* Delamirie, 1 Strange, 505.
*Ledu Coachman *v.* Hiralal Bose, 21 C.L.J. 527.
*Nagendranath Ray *v.* Basanta Das Bairagi, 57 Cal. 25 (Mukherjee, J.).
Jamal *v.* Moolla Dawood Sons & Co., 43 I.A. 6; 43 Cal. 493.
*Glasgow Corporation *v.* Taylor, (1922) 1 A.C. 44.
*Jefferson *v.* Derbyshire Farmers Ltd., (1921) 2 K.B. 281.
Dickinson *v.* Dodds, (1876) 2 Ch.D. 463.

Final Examination in Law.

Land Tenures, Land Revenue and Prescription.

Joykishen Mookerjee *v.* The Collector of East Burdwan, 10 M.I.A. 16; 1 W.R.P.C. 26; 2 P.C.J. 54.
*Lopez *v.* Muddunmohan Thakoor, 13 M.I.A. 463; 14 W.R.P.C. 11; 2 P.C.J. 594.
Maharani Rajroop Koer *v.* Syed Abdul Hossein, L.R. 7 I.A. 240; 6 Cal. 394; 4 P.C.J. 199.
*Mahesh Narain *v.* Nawbut Pathak, 1 C.L.J. 437; 32 Cal. 937.
Narendranath Roy *v.* Ishanchandra Sen, 22 W.R. 22.
Nagendrachunder Ghose *v.* Mahomed Esoff, 18 W.R. 113; 3 P.C.J. 151.
*Raja Lelanund Singh Bahadur *v.* The Government of Bengal, 6 M.I.A. 101; 4 W.R. 77; 1 P.C.J. 505.
Sonet Kooer *v.* Himmut Bahadur, I.L.R. 1 Cal. 391.
*Krishnapada Chatterjee *v.* Manadasundari Ghose, 36 C.W.N. 518; 55 C.L.J. 240.
*Manmathanath Mitra *v.* Rajeswar Raychaudhury, 55 Cal. 355.
Sashibhusan Misra *v.* Joyotiprasad Singh Deo, 44 I.A. 46; 44 Cal. 585; 21 C.W.N. 377.
*Srinath Roy *v.* Dinabandhu Sen, 42 I.A. 221.
*Paul *v.* Robson, 42 I.A. 180.
*Chandrakanta Nath *v.* Amjad Ali, 48 Cal. 783; 25 C.W.N. 4.
Nilmoni Kar *v.* Satiprosad Garga, 32 C.L.J. 11; 25 C.W.N. 230.
Ranjit Singh *v.* Kali Dasi Devi, L.R. 44 I.A. 117.
Chandra Binode Kundu *v.* Alabux, 31 C.L.J. 510.

Equity and Trust.

*Allcard *v.* Skinner, L.R. 36 Ch. D. 145; Finch Sel. Cas. 600.
Earl of Aylesford *v.* Morris, L.R. 8 Ch. App. 484.
Cooper *v.* Phibbs, L.R. 2 H.L. 149.
Fox *v.* Mackreth, 2 Wh. and T. 709; (1788) 2 R.R. 55.
Gopechrist Gossain *v.* Gangapersaud Gossain, 6 M.I.A. 53.

In re Hallet's Estate, L. R. 13 Ch.D. 696.
Le Neve *v.* Le Neve, 2 Wh. and T. 175.
Mussorie Bank *v.* Raynor, L.R. 7, App. Cas. 321; I.L.R. 4 All. 500; L.R. 9 I.A. 70.
Ramkoomar Koondoo *v.* Macqueen, L.R.I.A. Sup. Vol. 40.
*Stapilton *v.* Stapilton, 4 Wh. and T. 223; 1 Atk. 2.
The Mayor of Lyons *v.* The Advocate-General of Bengal, I.L.R. 1 Cal. 303.
Tulk *v.* Moxhay, 11 Beav. 571; 2 Ph. 774; 1 Hall and Twells 105; Finch Sel. Cas 777.
Penn *v.* Baltimore, (1750) 1 Ves. Sen 444.
*Maddison *v.* Alderson, L.R. 8 A.C. 473.
In re Nisbet and Pott's Contract, 1906 1 Ch. 387.
*Pearymohan Mukherjee *v.* Manohar Mukherjee, L.R. 48 I.A. 258; I.L.R. 48 Cal. 1019.
Nagendrabala Dasi *v.* Dinanath Mahish, L.R. 51 I.A. 24.
Inche Noriah *v.* Shaik Allie Bin Omar, 1929 A.C. 127.
Mahomed Ariff *v.* Jadunath Majumdar, 58 I.A. 91.

Civil Procedure Code, Evidence and Limitation Acts.

*Ramendranath *v.* Brojendranath, I.L.R. 45 Cal. 111; 27 C.L.J. 158.
Ishanchandra *v.* Benimadhab, I.L.R. 24 Cal. 62.
*Zain-ul-abdin *v.* Asghar Ali, I.L.R. 10 All. 166; 15 I.A. 12.
Soobulchandra Law *v.* Rassiklal Mitter, I.L.R. 15 Cal. 202.
Kamini Debi *v.* Pramathanath Mukherjee, 20 C.L.J. 476; 19 C.W.N. 755.
Ghuznavi *v.* Allahabad Bank, (F.B.) I.L.R. 44 Cal. 929; 21 C.W.N. 877; 26 C.L.J. 49.
*Hridaynath Ray *v.* Ramchandra Barua Sarma, (F.B.) I.L.R. 43 Cal. 138; 31 C.L.J. 482; 24 C.W.N. 723.
Tarini *v.* Kedar, 56 Cal. 723 F.B.
Talebali *v.* Abdul Aziz, 34 C.W.N. 66; 50 C.L.J. 566 F.B.
Gujju Lal *v.* Fatteh Lal, I.L.R. 6 Cal. 171.
*Saratchunder Dey *v.* Gopalchandra Laha, I.L.R. 20 Cal. 296; L.R. 19 I.A. 203.
Hurrybux Deora *v.* Joburmull Bhatoria, 57 Cal. 386.
*Basantakumar Ray *v.* Secretary of State for India, 44 Cal. 858; 44 I.A. 104; 25 C.L.J. 487.
Saratkamini Dasi *v.* Nagendranath Pal, 29 C.W.N. 973.
Vidya Varuthi *v.* Baluswami Ayyar, 48 I.A. 302; 44 Cal. 831.

Law of Crimes and Criminal Procedure.

*Ganauri Lal Das *v.* Queen Empress, I.L.R. 16 Cal. 206.
In the matter of the Petition R. MacCrea, I.L.R. 15 All. 172.
Nabi Baksh *v.* Queen Empress, I.L.R. 25 Cal. 416.
*Queen Empress *v.* Nayamuddin, I.L.R. 18 Cal. 484.
Queen Empress *v.* Bal Gangadhar Tilak, 22 Bom. 112.
Queen Empress *v.* Gorachand Gope, B.L.R. Sup. Vol. 443; 5 W.R. Cr. 45.
*Queen Empress *v.* Sri Churn Chungo, I.L.R. 22 Cal. 1017.
*Queen Empress *v.* Abbas Ali, I.L.R. 25 Cal. 512.
The Empress *v.* Riasat Ali, I.L.R. 7 Cal. 352.
Khosh Mahomed Sirkar *v.* Nazir Mahomed, I.L.R. 33 Cal. 352.
Vaithinath Pillai *v.* The King Emperor, L.R. 40 I.A. 193.
Amritlal Hazra *v.* Emperor, I.L.R. 42 Cal. 954.
*Pulinbehari Das *v.* King Emperor, 15 C.L.J. 517.
Birendrakumar Ghosh *v.* Emperor, 37 Cal. 467.
Re Matilal Ghosh, I.L.R. 45 Cal. 169.
Amritlal Bose *v.* Corporation of Calcutta, I.L.R. 44 Cal. 1025.
Ali Muhammad *v.* Piggot, 32 C.L.J. 270.
Barendra *v.* King Emperor, 52 I.A. 40.
Begu *v.* King Emperor, 52 I.A. 191.
Praphullakumar Sarkar *v.* The Emperor, 35 C.W.N. 731 F.B.
Subramanya Aiyar *v.* King Emperor, 25 Mad. 61; 28 I.A. 257.
Abdul Rahaman *v.* King Emperor, 54. I.A. 96.
Arnold *v.* King Emperor, 41 I.A. 149; 41 Cal. 1023.

J. CHAKRAVORTI, *Registrar.*

Dacca Division.

Dacca, the 12th January 1935.

Award of Primary Preliminary Scholarships, 1934.

(Each scholarship is of the value of Rs. 2 per month and is tenable for two years from 1st January 1935.)

No.	Name of scholarship holder.	Name of school from which the candidate appeared.	Name of school in which the scholarship is tenable.
	Twelve Government Primary Preliminary Scholarships reserved for backward classes.		
	Dacca District.		
1	Harendra Kumar Roy	.. Budhair Kandi Primary	.. Kanchanpur Primary.
2	Kalipada Barman	.. Lakpur Primary	.. Lakhpur Simulia High.
3	Madhu Sudan Dhali	.. Hariharpara Primary	.. Narainganj High.
	Mymensingh District.		
1	Mrityunjoy Das	.. Sadullapur Primary	.. Tangail S. N. High.
2	Dayal Chandra Basak	.. Nalsunda Primary	.. Karatia H. M. High.
3	Ram Sundar Debnath	.. Masimpur Board Primary	.. Masimpur Board Primary.
	Faridpur District.		
1	Matilal Gharami	.. Pakhiraj Rajarchar Primary	.. Pakhiraj Rajarchar U. P.
2	Bijoy Krishna Biswas	.. East Gobra Primary	.. East Gobra Primary.
	Bakarganj District.		
1	Sukha Ranjan Mala	.. Subidkhali Primary	.. Patuakhali J. High.
2	Bhubaneswar Sikdar	.. Lotabunia Primary	.. Mathbaria High.
3	Ganada Sundari Sinha	.. Ghoshkhali Kalibari Primary	.. Ghoshkhali Kalibari Primary.
4	Mohendra Lal Sajoal	.. N. Char Aicha Primary	.. Barisal Town High.

ABUL HASHEM KHAN CHAUDHURY,
Inspector of Schools, Dacca Division.

Rajshahi Division.

Jalpaiguri, the 1st February 1935.

The following candidate has been awarded a Lower Primary Scholarship reserved for backward classes, on the results of the Primary Preliminary Scholarship Examination of 1934, Rajshahi Division, in addition to the nine scholarships published in *Calcutta Gazette*, dated Thursday, the 31st January 1935.

(The scholarship is of the value of Rs. 2 a month and is tenable for two years with effect from the 1st January 1935.)

Ten Government Lower Primary Scholarships reserved for backward classes.

	Name of scholar.	Name of school from which the scholar appeared.	Name of school where the scholarship is tenable.
	(1 to 9 published in the *Calcutta Gazette*, dated the 31st January 1935.)		
10	Guman Singh Kami	.. Chaturbuddhi L. P. School (Darjeeling)	Podong M. E. School (Darjeeling).

K. AHMED, *Inspector of Schools, Rajshahi Division.*

Dacca Division.

Dacca, the 1st February 1935.

The undermentioned candidates are declared to have passed the Guru Training Examination held in December 1934.

(The asterisk prefixed to the name of the candidate indicates that he has passed in the optional subject English) :—

FIRST DIVISION.

(In order of merit.)

Madaripur Guru Training School.

1 Nityahari Dhali.

Sagardi Guru Training School.

2 Satindra Narayan Bose.

Medua Guru Training School.

3 Jajneswar Sonar.

Faridpur Guru Training School.

4 Md. Lal Mian.

Kishoreganj Guru Training School.

5 Haris Chandra Pal.

Raipura Guru Training School.

6 Bazlul Huq Bhuya.

Medua Guru Training School.

Syed Ahmad.

Madaripur Guru Training School.

7 Fazlul Karim Mian.

Raipura Guru Training School.

*Md. Nural Islam.
8 *Surendra Chandra Chakraverty.

Munshiganj Guru Training School.

Abdul Hakim, I.

Kishoreganj Guru Training School.

Md. Abdul Aziz.
9 Safiruddin Ahmed Khan.

Patuakhali Guru Training School.

10 *Nakuleswar Halder.
11 *Nur Muhammad.

Faridpur Guru Training School.

*Md. Abdul Quader.
12 *Md. Isharat Ullah.
13 *Syed Jalal Ahmed.

Patuakhali Guru Training School.

14 *Benode Behari Malaker.

Faridpur Guru Training School.

15 Abdul Jabbar Mian.
16 Prananath Sarkar.

Munshiganj Guru Training School.

17 Apurba Lal Bandhupadhya.

Mymensingh Guru Training School.

18 Amulya Kumar Chakraverty.

Faridpur Guru Training School.

Montazuddin Ahmed.
19 Monoranjan Biswas.

Patuakhali Guru Training School.

Devendra Nath Halder.

Jamalpur Guru Training School.

20 Md. Mobarak Ali.

Patuakhali Guru Training School.

Jogendra Nath De.
Akshoy Kumar Das.
21 *Abdul Wahed.

Kishoreganj Guru Training School.

22 *Parimal Chandra Roy.

Madaripur Guru Training School.

23 *Sudhir Ranjan Acherji.

Faridpur Guru Training School.

24 Aswini Kumar Roy.

Raipura Guru Training School.

25 Md. Abdur Razzak Bhuya.

Munshiganj Guru Training School.

26 Abed Ali Bhuya.

Faridpur Guru Training School.

*Md. Zaker.

Munshiganj Guru Training School.

27 Md. Hafizul Huq.

Kishoreganj Guru Training School.

28 Md. Ismail.

Faridpur Guru Training School.

*Abdul Latif Mian.

Patuakhali Guru Training School.

29 Projendra Nath Malangi.

Medua Guru Training School.

30 *Majibar Rahman.

Faridpur Guru Training School.

31 Rashiklal Chakraverty.

Mymensingh Guru Training School.

32 Khandaker Mahiuddin Ahmed.

Faridpur Guru Training School.

33 Pramathanath Datta.

Mymensingh Guru Training School.

34 Jogesh Chandra Saha.

Kishoreganj Guru Training School.

Surendra Kishore Das.

Munshiganj Guru Training School.

35 *Alfazuddin Bhuia.

Patuakhali Guru Training School.

*Abdul Halim.

Faridpur Guru Training School.

36 *Md. Sabed Ali Molla.

Kishoreganj Guru Training School.

37 *Hashimuddin Ahmed.
38 Khoazuddin Ahmad.

Madaripur Guru Training School.

39 *Radhashyam Chakraverty.

Mymensingh Guru Training School.

40 Abdul Majid Ahmad.
Syed Ali Ahmad.
Digindra Chandra Das.

Faridpur Guru Training School.

*Md. Rustam Ali.

Patuakhali Guru Training School.

41 Gopal Chandra Sil.

Kishoreganj Guru Training School.

42 Md. Hasen Ali Bhuia.

Madaripur Guru Training School.

Gopimohan Biswas.

Patuakhali Guru Training School.

*Abdur Rashid, II.
*Md. Akbar Ali Mian.

Raipura Guru Training School.

43 *Md. Sarafat Ali.

Mymensingh Guru Training School.

44 Dwijendra Chandra Chakraverty.

Faridpur Guru Training School.

*Manash Ranjan Biswas.

Sagardi Guru Training School.

*Nara Narayan Chakraverty.

Patuakhali Guru Training School.

*Nakuleswar Das.

Jamalpur Guru Training School.

45 Abdul Momin.

Faridpur Guru Training School.

*Nuruddin Howlader.
46 Atindra Nath Saha.
*Abdul Gani Harkara.

Sagardi Guru Training School.

Nishi Kanta Das.

Mymensingh Guru Training School.

47 Gajendra Chandra Deb Talukder.

Faridpur Guru Training School.

*Nasiruddin Khan.
48 Milan Khan *alias* Mainuddin Ahmed.

Jamalpur Guru Training School.

49 Nawab Ali Ahmed.

Manikganj Guru Training School.

50 Khagendra Nath De.

Munshiganj Guru Training School.

Aswini Kumar Bal.

Kishoreganj Guru Training School.

51 Md. Abdur Rahman, I.

Sagardi Guru Training School.

Abdul Latif.

Raipura Guru Training School.

52 Md. Lutfar Rahman.
*Md. Ayesh Ali.

Munshiganj Guru Training School.

Md. Adam Ali Miah,

Jamalpur Guru Training School.

Md. Mozharul Haque.

Madaripur Guru Training School.

53 *Nawab Ali Majumder.
54 *Mosleh Uddin Ahmed.

Patuakhali Guru Training School.

*Abdul Aziz Sikdar.

Raipura Guru Training School.

55 *Makbul Ahmad Bhuia.

Mymensingh Guru Training School.

Md. Kudrat Ullah.

Patuakhali Guru Training School.

*Abdul Hamid.

Raipura Guru Training School.

56 Md. Sayeb Ali.

Kishoreganj Guru Training School.

Md. Abdul Hakim.
57 Alem Ali Khan.

Patuakhali Guru Training School.

58 Md. Ismail.

Munshiganj Guru Training School.

59 *Abdul Aziz Mian.

Mymensingh Guru Training School.

Jitendra Chandra Bir.
60 Chandra Kumar Bhattacherji.

Sagardi Guru Training School.

*Akshoy Kumar Mandal.

Mymensingh Guru Training School.

61 Abinash Chandra Bhattacherji.
Md. Sarafat Ali.

Madaripur Guru Training School.

*Md. Nader Hossain Molla.

Munshiganj Guru Training School.

62 Md. Abdul Haque.

Kishoreganj Guru Training School,

*Muzafar Uddin Ahmad.

Raipura Guru Training School.

63* Bahauddin Ahmad.

Munshiganj Guru Training School.

Md. Abdul Ali.

Patuakhali Guru Training School.

*Wazed Ali Sikder.

Birisiri Guru Training School.

*Md. Hafezuddin.

Dacca Guru Training School.

64 Moslehuddin Ahmad.

Patuakhali Guru Training School.

*Mansur Ahmad.

Faridpur Guru Training School.

65 Kazi Mauzem Ali.

Patuakhali Guru Training School.

Ataharuddin.
Azahar Ali Akon.

Dacca Guru Training School.

66 Md. Saheb Ali.

Munshiganj Guru Training School.

Mahammad Hussain.

Patuakhali Guru Training School.

*Md. Nur Baksha Mian.

Mymensingh Guru Training School.

67 Md. Abdur Razzak.

Private.

Kishoroganj Guru Training School.

Md. Dhangazi Miah.
Upendra Chandra Das.

SECOND DIVISION.

Dacca Guru Training School.

1 *Mofizuddin Bhuia.
2 Md. Abdul Hashim.
3 Abdus Sobhan.
4 *Mafizuddin Ahmed.
5 Aswini Kumar Malo.
6 Md. Jomsher Ali.
7 Md. Safar Ali.
8 Md. Saidur Rahman.
9 *Rajani Kanta Gope.
10 Braja Kishore Ray.
11 Hiralal Saha.
12 *Abdul Hamid.
13 *Harendra Chandra Sukla Das.
14 *Md. Abdul Kader.
15 Umesh Chandra Nath.
16 Abdus Shahid.
17 Mijanur Rahman Molla.
18 *Chandra Kanta Debnath.
19 *Sheikh Jobed Ali.
20 Md. Afzal Ali Bhuia.
21 Abdul Wahab.
22 Madhab Chandra Biswas.
23 Aswini Kr. Chakravarty.
24 *Madan Mohan Chakravarty.
25 Abdul Quddus.
26 *Md. Azizullah.
27 Md. Nur Hossain.
28 Abdul Latif Khan.
29 Abdul Latif Majumdar.

Manikganj Guru Training School.

1 *Naresh Chandra Sarkar.
2 Ram Lal Mandal.
3 Abdul Hafiz Sikdar.
4 Harunal Rashid Khan.
5 Mofizuddin Ahmad.
6 Md. Fazlal Bari.
7 Akhil Chandra Mandal.
8 Sarat Chandra Sarkar (private).

Raipura Guru Training School.

1 Md. Kadam Ali.
2 *Md. Abdul Hakim Sheikh.
3 Md. Ansar Ali.
4 *Md. Diarish Ali.
5 Md. Amir Hossain.
6 Abdul Quddus.
7 *Md. Ali Newaz Bhuia.
8 Md. Naib Ali.
9 *Md. Abdus Sobhan.
10 Alauddin Ahmad.
11 Md. Abdul Quddus (private).
12 Md. Abdul Wadud (private).
13 Md. Idris Ali (private).
14 Hazi Jinat Ali Khan (private).
15 Md. Mozaffar Ali Bhuia (private).
16 Md. Abdul Jalil (private).
17 Abdul Jobbar (private, English only).
18 Abdus Samad (private, English only).

Munshiganj Guru Training School.

1 Abdul Hamid.
2 *Hari Har Bhattacharjee.
3 Md. Abu Taleb.
4 Md. Asmat Ali.
5 *Abdul Khaleq Mridha.
6 Kalandar Ali Khan.
7 Momtazuddin Ahmed.
8 Rajendra Ch. Nandi.
9 Prabhat Chandra Das.
10 *Mati Lal Ganguli.
11 *Madan Mohan Sikdar.
12 *Md. Anwar Ali.
13 Md. Habibar Rahman Mridha.
14 Khalilur Rahman.
15 Najrul Islam.
16 Rehazuddin Ahmed.
17 Md. Abdul Hakim, II.
18 Abdul Wahed.
19 Abdur Rahman.
20 Akramali Mian.
21 Md. Baksha Ali.
22 *Osman Ali Mian.
23 Prabhat Ch. Debnath.
24 *Rup Chandra Dutta.
25 Hafizuddin Ahmed.
26 Abdul Halim Mian.
27 *Wazuddin.
28 *Abdul Majid.
29 Badaruddin (private).
30 Shahabuddin Miah (private).
31 Md. Lokman Hakim (private).
32 Abbas Ali (private).
33 Matiur Rahman Mridha (private).

Mymensingh Guru Training School.

1 Mobarakali Khan.
2 Debendra Ch. Adhikari.
3 Serajuddin Ahmed.
4 Md. Abdul Hamid Talukdar.
5 *Md. Abdul Karim.
6 Md. Misbahuddin.
7 Azimuddin Khan.
8 Md. Abeduzzaman Khan.
9 Md. Afsaruddin.
10 *Md. Mobarakali Mian.
11 Sudhansu Bhusan Goswami.
12 Md. Abdul Majid Talukdar.
13 Md. Mia Hossain Bhuia.
14 Syed Nurul Haque.
15 Md. Ahmed Ali.
16 Md. Abbas Ali.
17 Md. Abul Hossain, I.
18 *Md. Abdul Majid.
19 Md. Maniruddin.
20 *Prafulla Chandra Bhoumik.
21 *Md. Mufazzal Hossain.
22 *Abul Helal Mahfuzali Khan.
23 Surendra Chandra Das.
24 *Ahmed Hossain.
25 *Md. Abul Hossain, II.
26 *Nicholas Rozario.
27 Wafizuddin (private).
28 Md. Yakubali Bhuia (private, English only).

Jamalpur Guru Training School.

1 Md. Wazedali.
2 Philip Kandra Palma
3 Md. Abdur Rahman.
4 Md. Shamsuddin.
5 Md. Hatem Ali.
6 Khandkar Abdul Wahed.
7 Khosh Muhammad Mian.
8 Obaidul Haque.
9 Moyezuddin Ahmed
10 Khandkar Tofazzal Hossain.
11 Md. Shahabuddin.
12 Bipin Chandra De.
13 Khandkar Abu Lulu Zahural Haque.
14 Kabiluddin Ahmed
15 Satish Chandra De
16 Nimai Chandra Das (private).
17 Md. Abdul Rasul (private).
18 Md. Rahmatullah (private).

Kishoreganj Guru Training School.

1 Md. Abdur Rahman, II.

Tangail Guru Training School.

1 Shaikh Ahmed Ali.
2 *Tasaddak Hossain Sarkar.
3 *Jatindra Mohan Ghosh.
4 *Haridas De Sarkar.
5 *Mirza Mahabubul Hossain.
6 *Md. Azimuddin Miah.
7 *Martuz Ali Khan.
8 *Kshitish Chandra Mitra.
9 Jagat Chandra De.
10 *Sakenuddin Ahmed.
11 Shukh Lal Sarma.
12 *Abhoya Gobinda Sarkar.
13 Jasimuddin Ahmed.
14 *Satish Chandra Das.
15 Naimuddin Sarkar.
16 *Badaruddin Ahmed.
17 Abdus Sattar Ahmed.
18 *Debendra Nath Ray
19 *Md. Abdul Monayem Khan.
20 Md. Nawabali Mian (private).
21 Moyezuddin Talukdar (private).

Birsirri Guru Training School.

1 *Sadananda Sangma.
2 *Nikhil Chandra Dutta.
3 *Jogesh Chandra Seal.
4 *Md. Sabez Ali.
5 *Ambica Charan Sircar
6 *Amal Chandra Bowl.
7 *Prakash Chandra Chandra
8 *Rohini M. Sangma.
9 *Jyotish Chandra Kar.
10 Md. Israil
11 Iman Ali.
12 Upendra Kr. Das (private).
13 Choran Marak (private).
14 Padma Lochan Biswas (private).

Faridpur Guru Training School.

1 *Niranjan Banerjee.
2 Md Giasuddin Ahmed.
3 Abdun Nazir Sheikh.
4 *Mominuddin Ahmed.
5 *Bimal Chandra Mukherji.
6 *Kobbadali Khan.
7 *Sheikh Motahar Hossain.
8 *Munshi Abed Ali.
9 *Md. Ansar Ali.
10 *Surendra Mohan Dutta.
11 *Nagendra Nath Chaudhury
12 *Surendra Nath Sarkar
13 Abu Taib Md. Alauddin.
14 *Hossainuddin Howladar.
15 Abdul Bari Mia.
16 *Momazzod Molla
17 Kazi Abdul Karim.
18 Kshirode Ranjan Sarkar.

Madaripur Guru Training School

1 *Abdul Hashim Mian.
2 *Mohsenuddin Biswas.
3 Md. Ataharuddin Chaudhury.
4 Abdul Mannan Molla.
5 *Nagendra Nath Das.
6 Lal Mahammad Molla.
7 Haran Ch. Chakravarty.
8 Munsurali Khan.
9 *Panchanan Biswas.
10 *Nural Islam.
11 Hara Lal Sarkar.
12 Md. Obaidullah Khan.

Sagardi Guru Training School.

1 *Jinnatali Howladar.
2 Abdul Majid Sikdar.
3 *Moslehuddin Akan.
4 *Mobarakali.
5 *Abdul Gani Sikdar.
6 Keramatali Pandit.
7 *Md. Golam Hossain.
8 Munshi Amuddin Mian.
9 Mujafar Ali.
10 Abul Kasem.
11 *Janardan Banerji.
12 *Kumud Behari Sarkar.
13 Md. Moslem Ali.
14 Md. Motahar Ali.
15 Bashi Bhusan Mandal
16 *Hatemali Khandkar
17 *Jadunath Barai.
18 Bhuban Mohan Sil.
19 *Kunja Behari Das.
20 Hatemali Khan.
21 Maulvi Md. Abdul Latif Khan
22 *Rash Behari Das.
23 Maulvi Md. Salamatullah.
24 *Mukunda Lal Bose.
25 *Ramesh Chandra Mandal.
26 Sarat Chandra Majhi.
27 *Biseswar Samaddar.
28 Abdul Latif.
29 *Md. Jafar Ali (private).
30 Abdul Gafur (private).
31 *Krishna Kanta Bairagi (private).
32 Abdul Karim Howladar (private).

Patuakhali Guru Training School.

1 Abdul Hakim Khan.
2 Abdur Rashid, I.
3 Ataharali Howladar.
4 Azizur Rahman.
5 Basir Ali Jomaddar
6 Fazlal Karim Sikdar.
7 *Jitendra Nath Dutta.
8 Jogendranath Halder.
9 Md. Ismail Sardar.
10 Menhazuddin Ahmed.
11 *Mozaharul Haque.
12 Mamtazuddin Ahmed.
13 *Rustam Ali.
14 Saderuddin Sikdar.
15 Safiuddin Ahmed.
16 Sorajuddin Ahmed.
17 *Syed Jalaluddin.
18 Tofail Ahmed
19 Yusuf Ali.
20 Amir Ali.
21 Sultan Ahmed
22 Munsur Ali.
23 Abdul Majid Gazi.

Medua Guru Training School.

1 Nazim Ali.
2 Md. Ismail.
3 Md. Ali Akbar Mian.
4 Md. Azizur Rahman.
5 *Md. Yusuf.
6 Bankim Ranjan Sen.
7 Rajendra Nath Das.
8 *Suresh Chandra Majumdar.
9 Md. Dalilur Rahman
10 *Kshirode Chandra Mandal.
11 *Jadab Chandra Rakshit.
12 *Umar Hashem.
13 *Abdul Hashem
14 *Md. Idris.
15 *Mokhlesur Rahman Khan.
16 Sarada Charan Das.
17 Abul Kashem.
18 Md. Momtazuddin.
19 *Md. Eshaque.
20 Altafar Rahman.
21 Rahamazzaman.
22 *Md Majibul Haque.
23 *Abdul Karim.
24 Hafezul Haque (private).

ABUL HASHEM KHAN CHAUDHURY,
Inspector of Schools, Dacca Division

Presidency Division.

40/1A, Free School Street, Calcutta, the 30th January 1935.

Results of the Final Examinations of the Guru Training Schools held in December 1934.

Nadia.

Krishnagar Guru Training School.

1 Abani Mohan Biswas.
2 Samarendra Nath Biswas.
3 Danial Dwijendra Nath Biswas.
4 Benoty Biswas.
5 Jatindra Nath Biswas.
6 Gaurhari Biswas.
7 Bibhuti Bhusan Biswas.
8 Sourindra Kumar Biswas.
9 Hazrat Ali Biswas.
10 Krishna Chaitanya Biswas.
11 Tafiluddin Choudhury.
12 Charu Chandra Chatterjee.
13 Anil Kumar Chakraberty.
14 Nitaipada Das.
15 Narayan Kumar Datta.
16 Upendra Nath Datta.
17 Bipad Bhanjan Mandal.
18 Naib-uddin Mandal.
19 Khorshed Ahmed.
20 Liyakat Hossain Mollah.
21 Ahmmad Ali Mallik.
22 Muhammad Kamar Ali.
23 Muhammad Foyzulla Mandal.
24 Muhammad Tahazuddin.
25 Muhammad Mofizuddin.
26 Muhammad Abdul Majid.
27 Muhammad Jiabuddin Mandal.
28 Muhammad Khalibar Rahaman.
29 Mahammad Moqbul Ahmad.
30 Murari Mohan Mukherjee.
31 Panna Lal Nandi.
32 Jaladhar Pal.
33 Janardan Pramanik.
34 Afazuddin Shaikh.
35 Kayemuddin Shaikh.
36 Abdul Gaffar Shaikh.
37 Harendra Kumar Sarkar.
38 Soroj Kumar Biswas.
39 Bibhuti Bhusan Singha Roy.
40 Panchugopal Singha Roy.

Devagram Guru Training School.

41 Mahadeb Mandal.
42 Rajkumar Biswas.
43 Nalinaksha Garai.
44 Riajtulla Biswas.
45 Bibhuti Bhusan Rajak.
46 Sudhir Kumar Bandopadhyaya.
47 Subal Chandra Karmakar.
48 Shibranjan Chattapadyaya.
49 Mani Mohan Biswas.
50 Rebati Mohan Mandal.
51 Satyaranjan Bandapadyaya.
52 Radhakanta Chakravarty.
53 Aolat Ali Shaikh.

Palashipara Guru Training School.

54 Muhammad Fazlo Rabbey.
55 Abul Hossain Khandakar.
56 Mafeer Ali Mandal.
57 Saferuddin Mandal.
58 Balaramchandra Das.
59 Oster Ali Shaikh.
60 Tarapada Biswas.
61 Bishnupada Ghosh.
62 Gourhari Biswas.
63 Abdul Wahed.
64 Nohajuddin Ahmad.
65 Sarat Chandra Sarkar.

Hatchapra Guru Training School.

66 Makhanlal Manjhi.
67 Chittaranjan Mandal.
68 Dwijendra Nath Murmu.
69 Simon Darmen.
70 Suresh Chandra Mandal.
71 Tarapada Naru.
72 Nripendra Kumar Sarkar.
73 Matilal Byapary.
74 Nirangshu Kumar Biswas.
75 Samuel Bimal Munshi.

Krishnaganj Guru Training School.

76 Satyendranath Chattopadhyaya.
77 Purnachandra Mukhopadhyaya.
78 Radhanath Biswas.
79 Muhammad Ahad Baksh Mandal.
80 Panchanan Basu.
81 Muhammad Iman Ali Biswas.
82 Muhammad Kazi Ataul Huq.
83 Muhammad Sadek Ali Mandal.
84 Mahadeb Indra.
85 Muhammad Mozammel Huq.
86 Muhammad Abdul Karim Biswas.
87 Amulyakumar Biswas.
88 Muhammad Elahi Baksh Biswas.
89 Muhammad Riaj-uddin Biswas.
90 Nanimohan Ghosh.
91 Muhammad Abdul Khalek Khan.

Kamalapur Guru Training School.

92 Muhammad Golam Mastafa.
93 Bilaet Hossan.
94 Afsar-uddin Ahmed.
95 Tamijuddin Biswas.
96 Muhammad Azimuddin.
97 Jitendranath Ghosh.
98 Nanigopal Biswas.
99 Satishchandra Pal.
100 Krishnadas Pal.
101 Khandakar Abdul Majid.
102 Chand Ali Biswas.
103 Golam Nabi Joadder.
104 Hafizuddin Ahmad.
105 Harendra Kumar Majumdar.
106 Bejoy Krishna Pal.

Ramnagar Guru Training School.

107 Kanailal Biswas, I.
108 Tarapada Chakraberty.
109 Abdul Hossain Biswas.
110 Maizuddin Ahmad (Biswas).
111 Harezuddin Ahmad.
112 Abdul Quddus.
113 Bholanath Mandal.
114 Kanailal Biswas, II.
115 Girindranath Mistry.
116 Md. Golam Quddus.
117 Jagat Bandhu Pal.
118 Kishorilal Sen.
119 Kalipada Dey.

Private.

1P Kazi Garibulla.
2P Mir Nurul Hossain.
3P Khagendranath Biswas.
4P Ratneswar Singha.
5P Lalchand Hansda.
6P Khownish Chandra Mazumdar.

J. M. SEN,

Inspector of Schools, Presidency Division.

Calcutta University.

NOTICE.

Senate House, the 30th January 1935.

Applications are hereby invited from candidates for the "Darbhanga Research Scholarship" for the year 1935.

The scholarship will be awarded for the purpose of encouraging original research in Medicine in its various branches, and all Graduates and Licentiates in Medicine of the Calcutta University are eligible to compete for the same. The value of the scholarship is Rs. 50 a month tenable for one year only from July 1935 to June 1936.

The scholarship shall be awarded under the following conditions:—

(*a*) That the scholar shall be appointed by the Syndicate on the recommendation of the Faculty of Medicine.

(*b*) That the scholar shall be required to devote at least 4 hours a day, Sundays and holidays excepted, during the tenure of his scholarship to research work in any special branch of Medical Science to be previously selected by him and approved by the Board of Studies in Medicine, and that his work shall be open to inspection by a member of the Faculty of Medicine to be specially deputed by the Faculty in that behalf.

(*c*) That every candidate must state in his application the special subject or branch of Medical Science in which he proposes to carry on investigation or research work, and must also state in what respects his investigations appear to him to tend to the advancement of medical studies. He shall also state in his application the place where he intends to carry on his research work. If in a recognised laboratory or hospital, a recommendation from the head of such laboratory or hospital as to the fitness of the candidate to conduct such work, and the probable value of such work, must accompany the application. If the candidate intends to carry on his investigations privately, his application must be supported by a certificate to the above effect from a member of the Faculty of Medicine.

(*d*) That during the tenure of his scholarship, every research scholar shall be required to submit short quarterly reports of his work to the member of the Faculty of Medicine who may be deputed to inspect his work, and upon whose favourable report the continuance of his scholarship shall depend.

(*e*) Each scholar shall, at the end of his tenure of scholarship, submit a complete statement, typewritten or otherwise, ready for publication, which shall be laid before the Faculty of Medicine, who shall, if publication be deemed advisable, decide all questions in connection therewith.

The applications from intending candidates must reach the office of the undersigned not later than the 30th April 1935.

B. B. DUTT,

Controller of Examinations (offg.).

Calcutta University.

NOTICE.

Senate House, the 1st February 1935.

The heads of all High Schools are informed that schools seeking recognition for the first time should submit their applications on or before the 15th of January, and those seeking recognition in special subjects, *e.g.*, Geography, Mechanics or Hygiene, on or before the 30th of June preceding the year from which such recognition is sought.

J. CHAKRAVORTI, *Registrar.*

Orders by the Vice-Chancellor and Syndicate of the Calcutta University.

NOTICES.

Senate House, the 30th January 1935.

It is hereby announced for general information that a centre has been sanctioned at Bagerhat in the district of Khulna for holding the I.A., I.Sc. and B.A. (Pass and Honours) Examinations for the year 1935, on usual conditions, as in previous years.

It is hereby announced for general information that Daulatpur Hindu Academy in the district of Khulna will be a centre for holding the B.A. and B.Sc. (Theoretical—Pass and Honours) Examinations, 1935, and the Practical Examinations in Physics (Pass) and Chemistry (Pass) at the B.Sc. Examination, 1935, on usual conditions, as in previous years.

B. B. DUTT,

Controller of Examinations (offg.).

Education Department, Bengal.

NOTIFICATION.

Calcutta, the 12th January 1935.

Subject to the usual conditions of good conduct and satisfactory progress, the Kumud Kanta Memorial Scholarship of the value of Rs. 5 a month is awarded to Kalyan Kumar Das Gupta who passed the Matriculation Examination of 1934 of Calcutta University from the Mymensingh Zilla School.

The scholarship is tenable for two years, with effect from the 1st June 1934, at the Ananda Mohan College, Mymensingh.

J. M. BOTTOMLEY,

Director of Public Instrn., Bengal.

University of Dacca.

Ramna, Dacca, the 26th January 1935.

Revised Time-table for the B.A. and B.Sc. Pass and Subsidiary Examinations, 1935.

The following revised Time-table in partial modification of the Time-table for the B.A. and B.Sc. Pass and Subsidiary Examinations of 1935, published in the *Calcutta Gazette* of 23rd August 1934, is notified for general information :—

Date.			Time—10 a.m. to 1 p.m.	Time—2 p.m. to 5 p.m.
1935.				
Thursday,	February	14	.. English, Paper I	.. English, Paper II.
Saturday	,,	16	.. English, Paper III	.. Economics, Paper I.
Monday	,,	18	.. Economics, Paper II	.. Economics, Paper III.
Tuesday	,,	19	.. (1) Vernacular (2) Special Paper in Bengali in lieu of Vernacular for candidates taking up Bengali as a subject for the B.A. Pass course.	.. (1) Sanskrit, Paper I. (2) Persian, Paper I. (3) Bengali, Paper I.
Wednesday	,,	20	.. (1) Sanskrit, Paper II (2) Persian, Paper II (3) Bengali, Paper II	.. (1) Sanskrit, Paper III. .. (2) Persian, Paper III. .. (3) Bengali, Paper III.
Thursday	,,	21	.. (1) Arabic, Paper I (2) Islamic Studies, Paper I (3) Chemistry, Paper I	.. (1) Arabic, Paper II. .. (2) Islamic Studies, Paper II. .. (3) Chemistry, Paper II. (4) Accountancy Paper for the B.A. Ordinary Examination of candidates who have taken up Commerce as their subject.
Saturday	,,	23	.. (1) Arabic, Paper III (2) Islamic Studies, Paper III (3) Physics, Paper I.	.. (1) Philosophy, Paper I. .. (2) Physics, Paper II.
Monday	,,	25	.. Philosophy, Paper II	.. Philosophy, Paper III.
Tuesday	,,	26	.. (1) History, Paper I (2) Mathematics, Paper I	.. (1) History, Paper II. .. (2) Mathematics, Paper II.
Wednesday	,,	27	.. (1) History, Paper III (2) Mathematics, Paper III.	.. (1) Politics, Paper I.
Thursday	,,	28	.. Politics, Paper II	.. Politics, Paper III.

N. AHMAD, *Registrar.*

Registered No. C207

The Calcutta Gazette

THURSDAY, FEBRUARY 7, 1935.

PART II

Advertisements.

Notices.

Advertisements, Notices, etc., intended for insertion in this part of the Gazette cannot be received after noon on Saturday. All manuscripts and postal remittances must be addressed to Superintendent, Government Printing, Bengal Government Press, Alipore. For the convenience, however, of parties or firms located in Calcutta cash payments of Advertisement charges may be made at Publication Sales Office, Room No. 2, Ground Floor, Writers' Buildings, Calcutta.

Sale Notification.

In the First Court of the Sub-Judge, 24-Parganas.

EXECUTION CASE No. 22 OF 1934.

TO be sold by public auction on Monday, the 11th February 1935, at 1 p.m., a palatial three-storeyed building belonging to Mr. Kamal Krishna Chowdhury, the judgment-debtor, standing on about 11 cottas 5 chittaks of rent-free land more or less, and abutting on Southern Avenue, being premises No. P.366, Russa Road, at present known as Southern Avenue.

[ILLEGIBLE], Sub-Judge.

Alipore, the 25th January 1935. (301—1)

In the 1st Court of the Sub-Judge at Pabna.

MONEY EXECUTION CASE No. 124 OF 1933.

Promoda Sundari Dassya

vs.

Sourendra Krishna Sinha and others.

ALL that four annas six pies of tauzi No. 104 estate of Pabna Collectorate, pargana Islampur, including Ganga path Jalkar, the proportion of revenue payable in this four annas six pies share being Rs. 6,841-14-6, Police Rs. 76-3-10, the value of the property being Rs. 18,000 as settled by Court, will be sold in execution of the abovementioned case at 12 noon on 18th February 1935 at Pabna by the 1st Sub-Judge of Pabna.

T. K. NAG, Sub-Judge.

Pabna, the 18th January 1935. (212—1)

In the 1st Court of the Sub-Judge at Pabna.

MONEY EXECUTION CASE No. 122 OF 1933.

Sarada Prasad Basu

vs.

Sourendra Krishna Sinha and others.

ALL that four annas six pies of tauzi No. 104 estate of Pabna Collectorate, pargana Islampur, including Ganga path Jalkar, the proportion of revenue payable in this four annas six pies share being Rs. 6,841-14-6, Police Rs. 76-3-10, the value of the property being Rs. 18,000 as settled by Court, will be sold in execution of the abovementioned case at 12 noon on 18th February 1935 at Pabna by the 1st Sub-Judge of Pabna.

T. K. NAG, Sub-Judge.

Pabna, the 18th January 1935. (213—1)

In the Court of the Fourth Officer, Deoghar, Sonthal Parganas.

RENT SUIT No. 1029 OF 1934.

To Babu Jadunath Rai.

WHEREAS the Receiver, Rohini Estate, has instituted a rent suit against you for your holding in mauza Carstairs, town Deoghar, amounting to Rs. 32-13 and costs Rs. 10-1-6, you are hereby directed to appear before this Court personally or through an authorised agent to answer the claim or the case will be decided *ex-parte* on 27th February 1935.

S. N. HUSSAIN, Sub-Deputy Collector.

Deoghar, the 17th January 1935. (214—2)

In the Court of the Fourth Officer, Deoghar, Sonthal Parganas.

RENT SUIT No. 1037 OF 1934.

To Babu Shama Charan Dutta.

WHEREAS the Receiver, Rohini Estate, has instituted a rent suit against you for your holding in mauza Carstairs, town Deoghar, amounting to Rs. 21-4-3 and costs Rs. 9-5-6, you are hereby directed to appear before this Court personally or through an authorised agent to answer the claim on the 26th February 1935 or the case will be decided *ex-parte*.

S. N. HUSSAIN, Sub-Deputy Collector.

Deoghar, the 17th January 1935. (215—2)

In the Court of the Fourth Officer, Deoghar, Sonthal Parganas.

RENT SUIT No. 1051 OF 1934.

To Indumati Dasi.

WHEREAS the Receiver, Rohini Estate, has instituted a rent suit against you for your holding in Deoghar Williams town amounting to Rs. 7-8 and costs Rs. 8-3-3, you are hereby directed to appear before this Court personally or through an authorised agent to answer the claim or the case will be decided *ex-parte* on 26th February 1935.

S. N. HUSSAIN, Sub-Deputy Collector.

Deoghar, the 17th January 1935. (216—2)

In the Court of the District Judge of Bankura.

INSOLVENCY CASE No. 3 OF 1934.

Surjya Kumar Samanta, son of late Raghunath Samanta, of Kenduadihi, police-station Bankura, district Bankura, petitioner.

NOTICE is hereby given that the abovenamed petitioner has been adjudged an insolvent on the 17th day of December 1934, and he has been directed to apply for final discharge within six months.

S. K. GANGULI, District Judge.

Bankura, the 10th January 1935. (126—1)

In the Court of the District Judge of Birbhum.

INSOLVENCY CASE No. 25 OF 1934.

Jogesh Chandra Mukherji, petitioner-creditor,

versus

Kalachand Chatterji, opposite party, debtor.

ON the application of Jogesh Chandra Mukherji, creditor, against his debtor Kalachand Chatterji, son of late Bishnu Pada Chatterji, residing at Pathai, police-station Moureswar, district Birbhum, for adjudicating the said debtor an insolvent, notice is hereby given to all his creditors that the said petition has been admitted by this Court and that the 16th day of February 1935 has been fixed for hearing the case.

B. K. GUHA, District Judge.

Suri, the 14th January 1935. (183—1)

In the Court of the District Judge of Darjeeling.

INSOLVENCY CASE No. 13 OF 1934.

Set Tamang, petitioner.

SET TAMANG, son of late Bhopal Tamang, of Sukia Pookhari, district Darjeeling, who was adjudged insolvent, has applied to this Court for final discharge. The 22nd day of February 1935 has been fixed for hearing the application at Darjeeling.

S. BANERJI, *for* District Judge.

Dinajpur, the 12th January 1935. (172—1)

In the Court of the District Judge of Hooghly.

NOTICE is hereby given, under clause (2) of section 12 of the Provincial Insolvency Act, V of 1920, to his creditors that the insolvency petition of Sasti Charan Bandopadhya, son of late Ram Sankar Bandopadhya, of Duttapur, thana Tarakeswar, district Hooghly, has been admitted by this Court as No. 2 of 1935 and that the 19th February 1935 has been fixed for the hearing thereof.

S. SEN, District Judge.

Chinsura, the 25th January 1935. (309—1)

In the Court of the District Judge of Jalpaiguri.

INSOLVENCY CASE No. 14 OF 1934.

Najabuddin Mohammed, petitioner.

NAJABUDDIN MOHAMMED, son of late Hechhan Ali Mohammed, of Bagdah, police-station Debigunj, Jalpaiguri, who was adjudged insolvent on the 7th day of May 1934, has applied to this Court for final discharge. The 15th day of February 1935 has been fixed for hearing the application at Jalpaiguri.

J. YOUNIE, District Judge.

Dinajpur, the 15th January 1935. (198—1)

In the Court of the District Judge of Jalpaiguri.

INSOLVENCY CASE No. 77 OF 1932.

Chandi Prosad Agarwalla, petitioner.

CHANDI PROSAD AGARWALLA, son of late Vajanlal Agarwalla, at Barnes Junction, police-station Mainaguri, district Jalpaiguri, who was adjudged insolvent on the 29th day of April 1933, has applied to this Court for final discharge. The 19th day of February 1935 has been fixed for hearing the application at Jalpaiguri.

S. S. R. HATTIANGADI, District Judge.

Dinajpur, the 23rd January 1935. (255—1)

In the Court of the District Judge of Mymensingh.

INSOLVENCY CASE No. 41 OF 1934.

NOTICE is hereby given that Kuran Sheik, son of late Gaher Sheik, of village Swaruppur, police-station Kalihati, district Mymensingh, has applied to this Court for being adjudicated as insolvent and that 16th day of February 1935 has been fixed for hearing of the said application.

H. G. S. BIVAR, District Judge.

Mymensingh, the 14th January 1935. —(197—1)

In the Court of the District Judge of Mymensingh.

INSOLVENCY CASE No. 3 OF 1935.

Sachuni Charan Saha Poddar and another, creditors, petitioners,

versus

Nadiabashi Saha, debtor, opposite party.

ON the application of Sachuni Charan Saha Poddar a creditor, against his debtor Nadiabashi Saha, son of late Kali Kishor Saha, residing at Gobindapur, police-station Bajitpur, district Mymensingh, for adjudicating the said debtor an insolvent, notice is hereby given to all his creditors that the said petition has been admitted by this Court, and that the 16th day of February 1935 has been fixed for hearing the case.

H. G. S. BIVAR, District Judge.

(279—1)

In the Court of the District Judge of Mymensingh.

INSOLVENCY CASE No. 2 OF 1935.

Umesh Chandra Majumdar, creditor, petitioner,

versus

Wahed Newaj Khan, debtor, opposite party.

ON the application of Umesh Chandra Majumdar, a creditor, against his debtors Wahed Newaj Khan and Khalek Newaj Khan, sons of late Jan ir Khan, residing at Batali, police-station Nandail, district Mymensingh, for adjudicating the said debtors insolvents, notice is hereby given to all his creditors that the said petition has been admitted by this Court and that the 23rd day of February 1935 has been fixed for hearing the case.

H. G. S. BIVAR, District Judge.

Mymensingh, the 23rd January 1935.

(304—1)

In the Court of the District Judge of Mymensingh.

INSOLVENCY CASE No. 47 OF 1933.

ON the application of the insolvent Kantu Chandra Saha, son of late Mathura Kanta Saha, of Pakulla, police-station Mirzapur, district Mymensingh, for an order of final discharge, the 23rd day of February 1935, has been fixed for hearing the aforesaid petition and the examination of the insolvent.

H. G. S. BIVAR, District Judge.

Mymensingh, the 23rd January 1935.

(305—1)

In the Court of the District Judge of Mymensingh.

INSOLVENCY CASE No. 48 OF 1933.

ON the application of the insolvent Sashi Mohan Saha, son of late Mathurakanta Saha, of Pakulla, police-station Mirzapur, district Mymensingh, for an order of the final discharge, the 23rd day of February 1935 has been fixed for hearing the aforesaid petition and the examination of the insolvent.

H. G. S. BIVAR, District Judge.

Mymensingh, the 23rd January 1935.

(306—1)

In the Court of the District Judge of Mymensingh.

INSOLVENCY CASE No. 49 OF 1933.

ON the application of the insolvent Mahim Chandra Saha, son of late Mathurakanta Saha, of Pakulla, police-station Mirzapur, district Mymensingh, for an order of final discharge, the 23rd day of February 1935 has been fixed for hearing the aforesaid petition and the examination of the insolvent.

H. G. S. BIVAR, District Judge.

Mymensingh, the 23rd January 1935. (307—1)

In the Court of the District Judge of Mymensingh.

INSOLVENCY CASE No. 38 OF 1931.

PURSUANT to a creditor's petition, dated the 9th day of June 1934, against his debtor Haran Chandra Roy, son of late Sarup Chandra Roy, of Talsahar, at present of Bhairab Bazar, police-station Bhairab, in the district of Mymensingh, and on the application of the creditor and reading his application and hearing his pleader, it is ordered that the debtor be and the said debtor is hereby readjudged insolvent.

It is further ordered that the debtor do apply for his final discharge within two years.

Dated this 24th day of January 1935.

H. G. S. BIVAR, District Judge.

(308—1)

In the Court of the District Judge of Pabna and Bogra.

INSOLVENCY CASE No. 56 OF 1934.

WHEREAS Jamaluddin Molla, son of late Salimuddin Molla, of Sridharpur, police-station and district Pabna, has applied to this Court, by a petition, dated 19th December 1934, to be declared an insolvent, this is to give notice to all his creditors that the Court has fixed the 19th February 1935 for hearing of the aforesaid application and for examination of the debtor.

B. K. BASU, District Judge.

Pabna, the 24th January 1935. (299—1)

In the Court of the District Judge of Pabna and Bogra.

INSOLVENCY CASE No. 58 OF 1934.

WHEREAS Abdul Jabbar Pramanik, son of late Umir Pramanik, of Salgaria, at present resident of Bhurbhuria, police-station and district Pabna, has applied to this Court, by a petition, dated 21st December 1934, to be declared an insolvent, this is to give notice to all his creditors that the Court has fixed the 19th February 1935 for hearing of the aforesaid application and for examination of the debtor.

B. K. BASU, District Judge.

Pabna, the 24th January 1935. (300—1)

In the Court of the District Judge of Rangpur.

INSOLVENCY CASE No. 3 OF 1935.

(1) Krishna Kumar Sarkar, (2) Anatha Bandhu Sarkar, sons of late Dhaneswar Sarkar, (3) Kamini Kumar Sarkar, minor, (4) Aswini Kumar Sarkar, minor, both the minors represented by their next friend and mother, Manpuri Barmani, of Naudabash, police-station Hatibandha, in the district of Rangpur, petitioners, creditors.

ON the application of the creditors abovenamed for adjudging the debtor, Devi Prosad Singha, son of late Gagan Ch. Singha, of Naudabash, police-station Hatibandha, district Rangpur, an insolvent, the 15th day of February 1935 has been fixed for hearing the aforesaid petition and the examination of the debtor.

P. C. DE, District Judge.

Rangpur, the 23rd January 1935. (282—1)

In the Court of the District Judge of Tippera.

INSOLVENCY CASE No. 15 OF 1933.

Rajani Kanta Pal, petitioner.

WHEREAS Rajani Kanta Pal, son of late Ram Manikya Pal, of village Balakhal, pargana Torah, police-station Hajiganj, district Tippera, debtor, does neither appear nor apply for discharge within the specified time fixed for hearing, it is ordered that the order of adjudication, dated the 18th day of May 1934, against the debtor be and the same is hereby annulled.

Dated this 22nd day of January 1935.

S. N. GUHA RAY, District Judge.

(254—1)

ORDER ANNULLING ADJUDICATION.

Section 43 of the Provincial Insolvency Act, V of 1920.

In the 4th Court of the Sub-Judge at Alipore.

INSOLVENCY APPLICATION No. 89 OF 1934.

J. E. Robertson, applicant.

WHEREAS J. E. Robertson of 25-1, Convent Road, Entally, 24 Parganas, debtor, does neither appear nor apply for discharge within the specified time fixed for hearing, it is ordered that the order of adjudication, dated 23rd June 1934, against the debtor be and the same is hereby annulled.

Dated this 18th day of January 1935.

J. N. SEN, Sub-Judge.

ORDER ANNULLING ADJUDICATION.

Section 43 of the Provincial Insolvency Act, V of 1920.

In the 4th Court of the Sub-Judge at Alipore.

INSOLVENCY APPLICATION No. 138 OF 1934.

Nand Behari Sonar, applicant.

WHEREAS Nand Behari Sonar of Bijpore, police-station Bijpore, does neither appear nor apply for discharge within the specified time fixed for hearing, it is ordered that the order of adjudication, dated 21st July 1934, against the debtor be and the same is hereby annulled.

Dated this 22nd day of January 1935.

J. N. SEN, Sub-Judge.

ORDER ANNULLING ADJUDICATION.

Section 43 of the Provincial Insolvency Act, V of 1920.

In the 4th Court of the Sub-Judge at Alipore.

INSOLVENCY APPLICATION No. 145 OF 1934.

Jeher Khan, applicant.

WHEREAS Jeher Khan of Telari, Budge Budge, 24-Parganas, debtor, does neither appear nor apply for discharge within the specified time fixed for hearing, it is ordered that the order of adjudication, dated 28th July 1934, against the debtor be and the same is hereby annulled.

Dated this 28th day of January 1935.

J. N. SEN, Sub-Judge.

In the 4th Court of the Sub-Judge of 24-Parganas.

INSOLVENCY CASE No. 384 OF 1934.

Angni Kori of Motiabruz of 42, Sutakal fatak, police-station Motiabruz, applicant.

To Sadhu Misir of Rudka Purua, district Protapgar, and others, creditors.

ON the 25th day of September 1934 it was ordered that the matter of the petition of the applicant be heard on the 11th day of February 1935, and that the said applicant do attend to be examined by this Court on that date.

—J. N. SEN, Sub-Judge.

Alipore, the 27th September 1934. (2430—1)

ORDER OF ADJUDICATION.

Section 27 of the Provincial Insolvency Act, V of 1920.

In the 4th Court of the Sub-Judge at Alipore.

INSOLVENCY APPLICATION No. 147 OF 1934.

PURSUANT to a petition, dated 12th April 1934, filed by Sm. Khandibala Dassi of 88-5, Chetla Road, police-station Alipore, and on the application of the debtor herself and on reading her application and hearing her pleader, it is ordered that the debtor be and the said debtor is hereby adjudged insolvent.

It is further ordered that the debtor do apply for her discharge within six months from this date.

Dated this 3rd day of October 1934.

J. N. SEN, Sub-Judge.

(2520—1)

In the 4th Court of the Sub-Judge of 24-Parganas.

INSOLVENCY CASE No. 514 OF 1934.

Sk. Abdul Motalib of Oranpara, police-station Titagarh, applicant.

To Gani Khan Kabuli of Bansbagan, police-station, Titagar, creditor.

ON the 21st day of December 1934 it was ordered that the matter of the petition of the applicant be heard on the 18th day of February 1935, and that the said applicant do attend to be examined by this Court on that date.

J. N. SEN, Sub-Judge.

Alipore, the 22nd December 1934. (133—1)

In the 4th Court of the Sub-Judge of 24-Parganas.

INSOLVENCY CASE No. 523 OF 1934.

Syed Ibni Hossain of 35, South Road, Entally, applicant.

To Dr. S. A. Rahaman of 30, South Road, Entally, and others, creditors.

ON the 19th day of December 1934 it was ordered that the matter of the petition of the applicant be heard on the 18th day of February 1935, and that the said applicant do attend to be examined by this Court on that date.

J. N. SEN, Sub-Judge.

Alipore, the 21st December 1934. (138—1)

NOTICE TO CREDITORS OF APPLICATION FOR DISCHARGE.

Section 41 (*1*) of the Provincial Insolvency Act, V of 1920.

In the 4th Court of the Sub-Judge at Alipore.

INSOLVENCY CASE No. 39 OF 1934.

Jugal Kisore Samanta of Joychandipore, police-station Budge Budge, applicant.

TAKE notice that the abovenamed insolvent has applied at the Court for his discharge, and that the Court has fixed the 18th day of February 1935, at 11 o'clock, for hearing the application.

Dated this 21st day of December 1934.

J. N. SEN, Sub-Judge.

(156—1)

NOTICE TO CREDITORS OF APPLICATION FOR DISCHARGE.

Section 41 (*1*) of the Provincial Insolvency Act, V of 1920.

In the 4th Court of the Sub-Judge at Alipore.

INSOLVENCY CASE No. 86 OF 1934.

Belayet Hossain of Makhalgacha, police-station Hasnabad, applicant.

TAKE notice that the abovenamed insolvent has applied at the Court for his discharge, and that the Court has fixed the 18th day of February 1935, at 11 o'clock, for hearing the application.

Dated this 22nd day of December 1934.

J. N. SEN, Sub-Judge.

(158—1)

ORDER OF ADJUDICATION.

Section 27 of the Provincial Insolvency Act, V of 1920.

In the Court of the District Judge at Alipore.

INSOLVENCY APPLICATION No. 33 OF 1934.

PURSUANT to a petition, dated 3rd August 1934, filed by Pulin Behary Bose of 8, Satcowrie Mitra's Lane, Baghmari, Narikeldanga, 24-Parganas, debtor, and on the application of the debtor himself and on reading his application and hearing his pleader, it is ordered that the debtor be and the said debtor is hereby adjudged insolvent.

It is further ordered that the debtor do apply for his discharge in nine months from this date.

Dated this 9th day of January 1935.

T. H. ELLIS, District Judge.

(253—1)

NOTICE TO CREDITORS OF APPLICATION FOR DISCHARGE.

Section 41(*1*) of the Provincial Insolvency Act, V of 1920.

In the Court of the District Judge at Alipore.

INSOLVENCY CASE No. 68 OF 1933.

Hazorimul of the firm of Ram Protap Hazorimull of Picken Garden Road, Ballygunge, 24-Parganas, applicant.

TAKE notice that the abovenamed insolvent has applied at the Court for his discharge, and that the Court has fixed the 11th day of February 1935 at 11 o'clock for hearing the application.

Dated this 24th day of January 1935.

T. H. ELLIS, District Judge.

(316—1)

NOTICE TO CREDITORS OF APPLICATION FOR DISCHARGE.

Section 41(*1*) of the Provincial Insolvency Act, V of 1920.

In the Court of the District Judge at Alipore.

INSOLVENCY CASE No. 54 OF 1933.

P. G. Datar of 75, Garden Reach, Kidderpore, 24-Parganas, applicant.

TAKE notice that the abovenamed insolvent has applied at the Court for his discharge, and that the Court has fixed the 25th day of February 1935 at 11 o'clock for hearing the application.
Dated this 25th day of January 1935.

T. H. ELLIS, District Judge.
(317—1)

MR. SAILENDRA NATH MITRA intends to be enrolled as an Advocate of the High Court, Calcutta.

(319—4)

MR. JALADHI NATH SADHU, B.L., intends to enrol as an Advocate of the Calcutta High Court.

(331—4)

MR. NIRANJAN SARKAR, M.A., B.L., intends to be enrolled as an Advocate of the Calcutta High Court.

(335—4)

MR. ABANI KANTA ROY, M.A., B.L., intends to be enrolled as an Advocate of the Calcutta High Court.

(336—4)

MR. SURJYA NARAYAN CHATTERJI, M.A., B.L., desires to be enrolled as an Advocate, Calcutta High Court.

(342—4)

MR. ATMARAM KHEMKA, M.A., B.L., desires to be enrolled as an Advocate of the Calcutta High Court.

(343—4)

MR. ANIL KUMAR MITTER, B.Sc., B.L., desires to be enrolled as an Advocate, Calcutta High Court.

(349—4)

WANTED a Muhammadan teacher for the Karaya Moslem Boys' Middle English School, Calcutta, on a monthly salary of Rs. 50 *less* 5 per cent. emergency cut in the scale of Rs. 50—4/2—90—5/2—100. Preference will be given to a B.Sc., with experience in teaching and competent to teach Geography and Science in Classes V and VI.

The application containing the following information should be submitted to this office on or before the 15th February 1935 :—

(1) Name of father.
(2) Native place—
(*a*) Village.
(*b*) Post Office.
(*c*) Thana.
(*d*) District.

(3) Age on 1st March 1935 (calculated according to the Matriculation Certificate).
(4) Whether competent to impart instruction through the medium of Urdu.
(5) Athletic qualification.
(6) Teaching experiences.

J. M. SEN,
Inspector of Schools, Presidency Division.

40/1A, Free School Street, Calcutta, the 24th January 1935.

WANTED a Higher Division Clerk in the scale of Rs. 80—85—5/2—120 for the Mymensingh District Office. None need apply who is not a native of the district and has got no previous office experience in a Government office. The selected candidate will be on probation for two months. Applications with testimonials will be received by the undersigned up to the 15th February 1935. Canvassing in any form and seeking interviews with the undersigned will be considered a disqualification.

T. M. DOW, District Officer.

Mymensingh, the 30th January 1935.

Public Service Commission (India).

APPLICATIONS are invited for three posts of Chemical Assistants and one post of Physical Assistant in the Indian Stores Department. In addition, one more post of Chemical Assistant and one of Physical Assistant are expected to fall vacant. (2) Pay : Chemical Assistant —Rs. 150—10- 300. Special grade Rs. 300—20—400 for 25 per cent. of posts. Physical Assistant—Rs. 150—10—300—efficiency bar—20 -400. (3) No age limit but candidates below 30 years will be preferred. (4) Candidates for Chemical Assistants' posts should be graduates either in Chemistry or Applied Chemistry. Research in any branch of Applied Chemistry of practical nature or experience of research or development in an industrial works of repute and, in the case of two posts, special experience in the analysis of Iron and Steel will be regarded as additional qualifications. (5) Candidates for Physical Assistant's post should either be graduates in Applied Physics or possess equivalent qualifications. Research in any branch of Applied Physics of a practical nature or experience of Industrial research in Applied Physics or Engineering will be regarded as additional qualifications. (6) Appointments temporary in the first instance but there are prospects of their continuance. Probation six months. (7) Government servants eligible, if permitted by their departments. Their pay will be governed by rules and, if entitled, they will get old scale which is Rs. 150 15—300—20—500. (8) The appointing authority intends to appoint to two of these six posts members of minority communities, at least one of whom will be a Muslim, if such persons are on the list of candidates most suitable for appointment submitted by the Public Service Commission. (9) Last date for receipt of applications 4th March 1935. Prescribed application forms and further particulars may be obtained from the Secretary, Public Service Commission, Delhi. Applicants for forms must mention the name of the post.

Delhi, the 29th January 1935. (337—1)

Imperial Bank of India.

THE following appointments on the Bank's staff are hereby notified :—

Mr. F. L. Blair to act as Superintendent, Branch Department, Local Head Office, Calcutta, as from the 28th January 1935.

Mr. K. N. Topader, Second Grade Assistant, Calcutta Local Head Office, to act as Accountant at that office, as from the 20th January 1935.

By order,

B. A. C. NEVILLE,
Secretary and Treasurer.

Calcutta, the 1st February 1935. (340—1)

Road Cess Notification.

THE District Board of Chittagong has fixed the rate of road cess for the year 1935-36 at 6 pies in a rupee as in the year 1934-35 as per resolution No.1, dated 11th January 1935.

M. A. AZIM, Chairman.

Chittagong, the 23rd January 1935. (294—3)

Road Cess Notification.

THE Hooghly District Board at a special meeting held on the 12th January 1935 have decided to levy the road cess in the district of Hooghly for the year 1935-36 at the maximum rate of half anna on the annual valuation of lands, etc., as enjoined in the Cess Act.

T. N. MUKERJEA, Chairman, District Board.

Chinsura, the 21st January 1935. (322—1)

THE Bengal and Madras Service Family Pension Fund which is provisionally managed and assisted by Government has for its object the provision of monthly pensions for the maintenance of the widows and children of subscribers and is open, with certain exceptions, to all active and pensioned members of the Uncovenanted service of Government (except those serving under the Government of Bombay), and to Local Fund servants earning pensions from Government. Some of the special features of the fund are (1) that widowed daughters incapable of re-marriage or children labouring under such mental or bodily infirmities as incapacitate them from earning their livelihood or preclude the possibility of marriage (in case of a daughter) are admitted to its benefits; and (2) that subscribers to the Widows and Daughters' branches are entitled to a refund of 30 per cent. of the premia paid, should the nominee predecease them after five years of admission. The second quinquennial valuation of the Fund has been completed by the Actuary to the Government of India, and his report discloses very favourable results. For forms of application and rules of the Fund apply to the Accountant-General, Bengal, Imperial Secretariat Buildings, Calcutta.

NOTICE is hereby given that all exhibits filed in cases disposed of in this Court during the year 1932 will be destroyed if not taken back before 31st March 1935 by the parties who filed them.

N. N. GUPTA, Municipal Magistrate, Calcutta.

Town Hall, Calcutta, the 9th January 1935.

NOTICE is hereby given that all exhibits filed in cases disposed of in this Court during the year 1932 will be destroyed if not taken back before 31st March 1935 by the parties who filed them.

A. MAJID, Municipal Magistrate, Calcutta.

Town Hall, Calcutta, the 9th January 1935.

Custom House Notice.

NOTICE is hereby given that whereas Messrs. J. F. Madan, have failed to meet the demand made for duty on three packages of Indian Films marked Calcutta India 21/23 ex ss. "Goldenfels" and bonded at 5, Dhurumtolla Street under warehousing bill of entry No. 78 of 8th January 1932 the said goods will be sold by auction on the 21st February 1935 at noon, at Messrs. Mackenzie Lyall & Co.'s Sale Room under the provisions of section 119 of the Sea Customs Act.

W. J. WARD, Collector of Customs.

Calcutta Custom House, the 30th January 1935.

(338—2)

Custom House Notice.

NOTICE is hereby given that whereas Messrs. J. F. Madan have failed to pay duty on the undermentioned cases of Whisky, Brandy and Gin, the said goods will be sold by auction on the 13th February 1935, at noon at Messrs. Mackenzie Lyall & Co.'s Sale Room under the provisions of section 119 of the Sea Customs Act :—

50 cases Whisky marked ◇T◇ under W. R. No. 115 of 22-10-31.
Calcutta
out of No. 1/60

5 cases Gin marked J. F. M. Calcutta 1/25 W. R. No. 114 of 22-10-31.

30 cases Gin marked J. F. M. Calcutta W. R. No. 89 of 15-10-31.

49 cases Brandy marked J. F. M. Calcutta W. R. No. 58 of 16-11-31.
out of No. 1555/1604

W. J. WARD, Collector of Customs (offg.).

Custom House, Calcutta, the 22nd January 1935.

(281—2)

BOARD OF REVENUE, BENGAL.

"A" Group—Wards Branch.

ORDER No. 1650 W.

WHEREAS certain properties belonging to the late Maharaja Sir Manindra Chandra Nandy of Kasimbazar, who was declared disqualified under section 6 (e) of Act IX (B. C.) of 1879 (*vide* Board's Order No. 2203 W., dated the 21st February 1929) were not taken under charge of the Court of Wards along with the other properties, of which the charge has been retained since his death under section 13(A) of the Act, and whereas Maharaja Srish Chandra Nandy has now inherited these excluded properties and possesses also certain other properties outside the management of the Court of Wards, and whereas it is necessary in the interest of the estate that all these properties should be taken under the charge of the Court of Wards. Now application having been made by the said Maharaja Srish Chandra Nandy of Kasimbazar praying that he may be declared to be a disqualified proprietor for the purpose of managing these properties and that such properties be brought under the management of the Court of Wards under clause (e) of section 6 of the Bengal Court of Wards Act (IX) of 1879 as amended up to date, the Court of Wards is pleased to declare that the said Maharaja Srish Chandra Nandy of Kasimbazar is a disqualified proprietor within the meaning of that section and that it is expedient in the public interest that these properties should be managed by the Court of Wards.

Under sections 7 and 35 of the said Act IX (B. C.) of 1879 the Court of Wards also declares that it has determined to take under its charge the properties of the disqualified proprietor abovenamed and it directs that possession be taken of such properties on behalf of the said Court.

By order of the Court of Wards, Bengal—

M. O. CARTER, Secretary.

Calcutta, the 30th January 1935. (329—1)

Lost.

THE Government Promissory Note No. 099539 of the 3 per cent. loan of 1896-97 for Rs. 500 originally standing in the name of Nuffar Chandra Ghoshal, the proprietor, by whom it was never endorsed to any other person, having been lost, notice is hereby given that payment of the above note and the interest thereupon have been stopped at the Public Debt Office, Imperial Bank of India, Calcutta, and that application is about to be made for the issue of duplicate in favour of the proprietor. The public are cautioned against purchasing or otherwise dealing with the above-mentioned security.

Signature of the advertiser—Nuffar Chandra Ghoshal.

Residence—Village Joynagar, post office Gangadharpur, district Howrah.

(312—3)

Lost.

A RECEIPT numbered 332, dated 11th December 1934, and granted by the Public Debt Office, Imperial Bank of India, on submission of the undermentioned United Provinces Bonds. Notice of loss has been given to the Public Debt Office, Imperial Bank of India, and the undersigned is about to apply for surrender of the securities—

United Provinces Bond number.	Loan.	Amount.	Holder's name.
		Rs.	
B000103	5 per cent., 1944.	500	Bhola Nath Banerji.
B000110	5 per cent., 1944.	500	Ditto.

Name of the proprietor—Bhola Nath Banerji.
Residence—23, Lall Bazar Street, Calcutta.

(334—1)

Stolen.

TWO Receipts numbered 809 and 3009, dated the 28th January 1935, and granted by the Public Debt Office, Imperial Bank of India, on submission of the undermentioned Government Promissory Notes. Notice of loss has been given to the Public Debt Office, Imperial Bank of India, and the undersigned is about to apply for surrender of the securities—

Receipt No.	G. P. Note No.	Loan.	Amount.	Holder's name.
			Rs.	
809	339330	3½ per cent., 1865.	2,000	Ashalata Devi.
	339331-32	3½ per cent., 1865.	1,000 each.	
3009	F004064-65.	5½ per cent., 1938-40.	500 each.	

Name of the proprietress—Sm. Ashalata Devi.

Residence—No. 1-1, Gopal Banerji Lane, Shanagar, p. o. Kalighat, Calcutta.

(341—1)

In the matter of the Indian Companies Act, 1913, and In the matter of Money Lender Company, Limited.

NOTICE is hereby given that at an extraordinary general meeting held on 5th January 1935, the above-named Company has, by an extraordinary resolution, been put into voluntary liquidation and Sj. Mono Mohan Saha, Bitghar, Comilla, has been appointed liquidator.

G. C. PODDER, Chairman.

Dated the 15th January 1935.

(251—1)

In the matter of the Indian Companies Act, 1913, and In the matter of Money Lender Company, Limited.

NOTICE is hereby given that a meeting of the creditors of the abovenamed Company will be held on 15th February 1935, at 3-30 p.m., at the office of the Company at Betghar, Comilla.

MONO MOHAN SAHA, Liquidator.

Dated the 15th January 1935. (252—1)

In the matter of the Indian Companies Act, VII of 1913, and In the matter of the Great Bengal Insurance, Limited (in liquidation).

NOTICE is hereby given, pursuant to section 209, that a meeting of the creditors of the abovenamed Company in voluntary winding up shall be held on the 11th February 1935, at 6 p.m., at the liquidator's office at 58, Clive Street, Calcutta.

H. C. RAKSHIT, Liquidator.

Calcutta, the 25th January 1935. (291—1)

In the matter of the Indian Companies Act, 1913, and In the matter of the New Insurance Co., Ltd., in liquidation.

THE New Insurance Co., Ltd., having been put into liquidation a general meeting of the Company will be held on 10th March 1935, at 5 p.m., in the office of the Company at 45-1, Urdu Road, Dacca, to examine accounts.

P. C. GUPTA, Liquidator.

(320—1)

In the matter of the Indian Companies Act, VII of 1913, and In the matter of Incell & Silk, Ltd. (in voluntary liquidation).

FINAL DISSOLUTION.

NOTICE is hereby given that a general meeting of the abovenamed Company will be held on Monday, the 11th March 1935, at 12 noon, at Avenue House, Chowringhee Square, Calcutta, for the purpose of receiving the account of the liquidator, showing the manner in which the winding up of the Company has been conducted and the property of the Company disposed of and of receiving any explanation that may be given by the liquidator and also for the purpose of determining the manner in which the books and documents of the Company and of the liquidator shall be disposed of.

G. C. READ, Liquidator.

Avenue House, Calcutta, the 7th February 1935.

(318—1)

In the matter of the Indian Companies Act, 1913, and In the matter of the Wood Land Tea Company, Limited (in voluntary liquidation).

NOTICE is hereby given under section 206 (*1*) of the Indian Companies Act, 1913, that at an extraordinary general meeting of the abovenamed Company held at its registered office on 28th January 1935, it has been resolved by an extraordinary resolution duly passed at the said meeting that the affairs of the Company be wound up voluntarily and that Babu Charu Chandra Sen of Jalpaiguri be appointed liquidator for the aforesaid purpose.

RAMESH CHANDRA GANGULY,
Chairman of the extraordinary general meeting.

Jalpaiguri, the 29th January 1935. (330—1)

In the matter of the Provident Insurance Societies Act, 1912 (V of 1912), and In the matter of Calcutta Finance and Agency Syndicate, Ltd.

WHEREAS I am of opinion as the result of an inquiry held by Mr. H. L. Humphreys, an Inspector appointed by me under sub-section (*1*) of section 17 of the Provident Insurance Societies Act, 1912 (V of 1912), that the Calcutta Finance and Agency Syndicate, Ltd., having its registered office at 17, Mangoe Lane, Calcutta, is insolvent or must necessarily become so and that the business of the said Calcutta Finance and Agency Syndicate, Ltd., is not conducted in accordance with its rules and that the registration of the said Calcutta Finance and Agency Syndicate, Ltd., ought to be cancelled;

Now, therefore, in exercise of the powers conferred by section 18 of the said Provident Insurance Societies Act, I hereby cancel the registration of the said Calcutta Finance and Agency Syndicate, Ltd.

And further, in exercise of the powers conferred by sub-section (*1*) of section 19 of the said Provident Insurance Societies, Act, I hereby appoint Mr. G. Basu, B.A., F.S.A.A., A.I.S.A., of 3-1, Bankshall Street, Calcutta, to be the liquidator to wind up the said Calcutta Finance and Agency Syndicate, Ltd., at a remuneration of 5 per cent. of the realisations of the dues to the Company subject to the minimum of Rs. 250 to be paid out of the assets of the Company.

N. K. MAJUMDER, Registrar of
Provident Insurance Societies, Bengal.

Calcutta, the 28th January 1935.

In the matter of the Provident Insurance Societies Act, 1912 (V of 1912), and

In the matter of Family Provision Insurance Society, Ltd.

WHEREAS I am of opinion as the result of an inquiry held by Mr. H. L. Humphreys, an Inspector appointed by me under sub-section (*1*) of section 17 of the Provident Insurance Societies Act, 1912 (V of 1912), that the Family Provision Insurance Society, Ltd., having its registered office at 219, Old China Bazar Street, Calcutta, is insolvent or must necessarily become so and that the business of the said Family Provision Insurance Society, Ltd., is not conducted in accordance with its rules and that the registration of the said Family Provision Insurance Society, Ltd., ought to be cancelled ;

Now, therefore, in exercise of the powers conferred by section 18 of the said Provident Insurance Societies Act, I hereby cancel the registration of the said Family Provision Insurance Society, Ltd.

And further, in exercise of the powers conferred by sub-section (*1*) of section 19 of the said Provident Insurance Societies Act, I hereby appoint Mr. S. K. Kar, B.Sc., A.S.A.A., A.I.S.A., of E-4, Hastings Street, Calcutta, to be the liquidator to wind up the said Family Provision Insurance Society, Ltd., at a remuneration of 5 per cent. of the realisations of the dues to the Company subject to the minimum of Rs. 100 to be paid out of the assets of the Company.

N. K. MAJUMDER, Registrar of
Provident Insurance Societies, Bengal.

Calcutta, the 28th January 1935.

In the matter of the Provident Insurance Societies Act, 1912 (V of 1912), and

In the matter of Gourisankar Insurance Co., Ltd.

WHEREAS I am of opinion as the result of an inquiry held by Mr. H. L. Humphreys, an Inspector appointed by me under sub-section (*1*) of section 17 of the Provident Insurance Societies Act, 1912 (V of 1912), that the Gourisankar Insurance Co., Ltd., having its registered office at 2, Royal Exchange Place, Calcutta, is insolvent or must necessarily become so and that the business of the said Gourisankar Insurance Co., Ltd., is not conducted in accordance with its rules and that the registration of the said Gourisankar Insurance Co., Ltd., ought to be cancelled ;

Now, therefore, in exercise of the powers conferred by section 18 of the said Provident Insurance Societies Act, I hereby cancel the registration of the said Gourisankar Insurance Co., Ltd.

And further, in exercise of the powers conferred by sub-section (*1*) of section 19 of the said Provident Insurance Societies Act, I hereby appoint Mr. S. K. Kar, B.Sc., A.S.A.A., A.I.S.A., of E-4, Hastings Street, Calcutta, to be the liquidator to wind up the said Gourisankar Insurance Co., Ltd., at a remuneration of 5 per cent. of the realisations of the dues to the Company subject to the minimum of Rs. 100 to be paid out of the assets of the Company.

N. K. MAJUMDER, Registrar of
Provident Insurance Societies, Bengal.

Calcutta, the 28th January 1935.

In the matter of the Provident Insurance Societies Act, 1912 (V of 1912), and

In the matter of the Anna-a-Day Insurance Society of India.

WHEREAS I am of opinion as the result of an inquiry held by Mr. H. L. Humphreys, an Inspector appointed by me under sub-section (*1*) of section 17 of the Provident Insurance Societies Act, 1912 (V of 1912), that the Anna-a-Day Insurance Society of India, having its registered office at "Bharat Buildings", Central Avenue, Calcutta, is insolvent or must necessarily become so and that the business of the said the Anna-a-Day Insurance Society of India is not conducted in accordance with its rules and that the registration of the said the Anna-a-Day Insurance Society of India ought to be cancelled :

Now, therefore, in exercise of the powers conferred by section 18 of the said Provident Insurance Societies Act, I hereby cancel the registration of the said the Anna-a-Day Insurance Society of India.

And further, in exercise of the powers conferred by sub-section (*1*) of section 19 of the said Provident Insurance Societies Act, I hereby appoint Mr. B. Guha, G.D.A., R.A., of 30, Grosvenor House, Calcutta, to be the liquidator to wind up the said the Anna-a-Day Insurance Society of India at a remuneration of 5 per cent. of the realisations of the dues to the Company subject to the minimum of Rs. 100 to be paid out of the assets of the Company.

N. K. MAJUMDER, Registrar of
Provident Insurance Societies, Bengal.

Calcutta, the 29th January 1935.

In the matter of the Provident Insurance Societies Act, 1912 (V of 1912), and

In the matter of Calcutta Bank and Insurance Co., Ltd.

WHEREAS I am of opinion as the result of an inquiry held by Mr. H. L. Humphreys, an Inspector appointed by me under sub-section (*1*) of section 17 of the Provident Insurance Societies Act, 1912 (V of 1912), that the Calcutta Bank and Insurance Co., Ltd., having its registered office at 14, Old Court House Lane, Calcutta, is insolvent or must necessarily become so and that the business of the said Calcutta Bank and Insurance Co., Ltd., is not conducted in accordance with its rules and that the registration of the said Calcutta Bank and Insurance Co., Ltd., ought to be cancelled :

Now, therefore, in exercise of the powers conferred by section 18 of the said Provident Insurance Societies Act, I hereby cancel the registration of the said Calcutta Bank and Insurance Co., Ltd.

And further, in exercise of the powers conferred by sub-section (*1*) of section 19 of the said Provident Insurance Societies Act, I hereby appoint Mr. B. Guha, G.D.A., R.A., of 30, Grosvenor House, Calcutta, to be the liquidator to wind up the said Calcutta Bank and Insurance Co., Ltd., at a remuneration of 5 per cent. of the realisations of the dues to the Company subject to the minimum of Rs. 100 to be paid out of the assets of the Company.

N. K. MAJUMDER, Registrar of
Provident Insurance Societies, Bengal.

Calcutta, the 29th January 1935.

In the matter of the Provident Insurance Societies Act, 1912 (V of 1912), and

In the matter of Eastern Mutual Insurance Society.

WHEREAS I am of opinion as the result of an inquiry held by Mr. H. L. Humphreys, an Inspector appointed by me under sub-section (*1*) of section 17 of the Provident Insurance Societies Act, 1912 (V of 1912), that the Eastern Mutual Insurance Society, having its registered office at 137, Canning Street, Calcutta, is insolvent or must necessarily become so and that the business of the said Eastern Mutual Insurance Society is not conducted in accordance with its rules and that the registration of the said Eastern Mutual Insurance Society ought to be cancelled :

Now, therefore, in exercise of the powers conferred by section 18 of the said Provident Insurance Societies Act, I hereby cancel the registration of the said Eastern Mutual Insurance Society.

And further, in exercise of the powers conferred by sub-section (*1*) of section 19 of the said Provident Insurance Societies Act, I hereby appoint Mr. S. K. Kar, B.Sc., A.S.A.A., B.I.S.A., of E-4, Hastings Street, Calcutta, to be the liquidator to wind up the said Eastern Mutual Insurance Society, at a remuneration of 5 per cent. of the realisations of the dues to the Company subject to the minimum of Rs. 100 to be paid out of the assets of the Company.

N. K. MAJUMDER, Registrar of
Provident Insurance Societies, Bengal.

Calcutta, the 29th January 1935.

Imperial Library.

(Secretariat Buildings, 6, Esplanade East, Calcutta)
Open on—

Week days and Saturdays from 10 a.m. to 7 p.m.
Sundays and Gazetted holidays from 2 p.m. to 5 p.m.

THE Imperial Library is also a Lending Library. It is free to all except children. There is no subscription to pay.

K. M. ASADULLAH, Librarian.

GOVERNMENT OF BENGAL.

FINANCE DEPARTMENT.

Miscellaneous.

Calcutta, the 20th October 1927.

NOTICE.

IN supersession of the orders issued in notice, dated the 10th June 1922, published in the *Calcutta Gazette*, dated the 14th June 1922, the following revised rates have been fixed for the *Calcutta Gazette* and its parts with effect from the date of this notice. This will not, however, affect the subscriptions already paid at previous rates until they have expired :—

	With postage.	
Per annum—	Rs.	Rs. A.
Entire	31	37 8
Part I	8	10 0
Part IA	2	3 0
Part IB	5	7 0
Part II	5	7 0
Parts III and IV together, or any one of them	1	1 8
Parts V and VI together, or any one of them	2	3 0
Bengal Library Catalogue ..	2	3 0
Jury Lists	3	4 0
Supplement	7	9 0

	Postage according to weight.
Per issue—	Rs. A.
Entire Gazette (excluding Bengal Library Catalogue and Jury Lists) ..	0 12
Part I	0 4
Part IA	0 2
Part IB	0 4
Part II	0 4
Parts III and IV together, or any one of them	0 2
Parts V and VI together, or any one of them	0 2
Bengal Library Catalogue ..	0 8
Jury Lists	1 0
Supplement	0 4

2. This will not affect the orders relating to specially heavy issues, issued in Notice No. 1874 Mis., dated the 22nd August 1923, published in the *Calcutta Gazette*, dated the 29th August 1923.

J. A. WOODHEAD,

Secretary to the Government of Bengal.

INDIAN LAW REPORTS.

CALCUTTA SERIES of Indian Law Reports from 1876 onwards are available in the Publication Branch, Bengal Government Press, Alipore, Bengal. Enquiries for these may be made to Superintendent, Government Printing, at the above address. Monthly parts from 1930 onwards are available at the Sales Department, Writers' Buildings, Calcutta—

Prices.

From 1876 to 1933— Rs.

Complete yearly volume 12 { (postage Rs. 3 Inland). („ Rs. 4 Foreign).

From 1930 onwards—

Monthly parts only .. 2 { (As. 2 Inland). (As. 3 Foreign).

Enquiries for other series than Calcutta must be made to the publishers concerned.

C. R. BATTERSBY,

Supdt., Govt. Printing, Bengal.

Alipore, the 6th December 1934.

Descriptive Catalogue of Sanskrit Manuscripts.

PARTS I, II and III of a Descriptive Catalogue of the Sanskrit Manuscripts in the Library of the Calcutta Sanskrit College, prepared by Pandit Hrishikesh Sastri and Babu Siva Chandra Gui, M.A., B.L., of that College, are offered to the public for sale. The Catalogue having to be completed in 23 parts the price of each part is 12 annas a copy exclusive of postage. Copies can be obtained from the Principal of the Sanskrit College, Calcutta.

CINCHONA FACTORY PRODUCTS.

By order of the Government of Bengal Cinchona Factory Products as manufactured and packed at the Cinchona Factory, Mungpoo, Darjeeling district, will be sold and distributed by the Superintendent of the **Presidency Jail**, *in original packages* as received from the Mungpoo Factory, at the rates herein noted **from the 1st May 1926 :—**

Quinine Sulphate.

For 60 lbs. and upwards at a time .. Rs. 18 per lb.
For 6 lbs. and over but less than 60 lbs. at a time .. .. .. „ 19 „
For any quantity less than 6 lbs. .. „ 20 „

Quinine Bisulphate.

Irrespective of quantity .. Rs. 20 per lb.

Quinine Hydrobromide.

Irrespective of quantity .. Rs. 25 per lb.

Quinine Salicylate.

Irrespective of quantity .. Rs. 26 per lb.

Quinine Bihydrobromide.

Irrespective of quantity .. Rs. 28 per lb.

Totaquina.

Irrespective of quantity .. Rs. 13-8 per lb.

Quinine Hydrochloride.

For 60 lbs. and upwards at a time .. Rs. 23 per lb.
For 6 lbs. and over but less than 60 lbs. at a time .. .. .. „ 24 „
For any quantity less than 6 lbs. .. „ 25 „

Quinine Di-Hydrochloride.

For 60 lbs. and upwards at a time .. Rs. 25 per lb.
For 6 lbs. and over but less than 60 lbs. at a time .. .. .. „ 26 „
For any quantity less than 6 lbs. .. „ 27 „

Quinidine Sulphate.

For 60 lbs. and upwards at a time .. Rs. 20 per lb.
For 6 lbs. and over but less than 60 lbs. at a time .. .. .. „ 21 „
For any quantity less than 6 lbs. .. „ 22 „

Cinchonidine Sulphate.

For 60 lbs. and upwards at a time .. Rs. 25 per lb.
For 6 lbs. and over but less than 60 lbs. at a time .. .. .. „ 26 „
For any quantity less than 6 lbs. .. „ 27 „

Cinchonine Sulphate.

For 60 lbs. and upwards at a time .. Rs. 12 per lb.
For 6 lbs. and over but less than 60 lbs. at a time .. .. .. „ 13 „
For any quantity less than 6 lbs. .. „ 14 „

Cinchona Febrifuge (Powder).

For 60 lbs. and upwards at a time .. Rs. 9 per lb.
For 6 lbs. and over but less than 60 lbs. at a time .. .. .. „ 9 „
For any quantity less than 6 lbs. .. „ 10 „

Cinchona Febrifuge (Tablets).

For 60 lbs. and upwards at a time .. Rs. 10 per lb.
For 6 lbs. and over but less than 60 lbs. at a time .. .. .. „ 10 „
For any quantity less than 6 lbs. .. „ 11 „

Quinoidine (Tablets).

For 60 lbs. and upwards at a time .. Rs. 5 per lb.
For 6 lbs. and over but less than 60 lbs. at a time .. .. .. „ 5 „
For any quantity less than 6 lbs. .. „ 6 „

Quinoidine (in Mass).

For 60 lbs. and upwards at a time .. Rs. 4 per lb.
For 6 lbs. and over but less than 60 lbs. at a time .. .. .. „ 4 „
For any quantity less than 6 lbs. .. „ 5 „

Cinchona Bark (in 50 pound original bags).

Per bag .. .. .. Rs. 25.

per box of 200 tablets each.

Quinine Tablets Rs. 2-8 (Bengal), Rs. 3 (outside Bengal)

Rs. 15-8-0 per lb.

Transit charges extra in every case.

Quinine Sulphate is for sale to Government Institutions and Missionaries only. It is not for sale to Private Firms or the General Public.

Cinchona Febrifuge in Powder and Tablet form (when in stock) is for sale to Government Institutions, Missionaries and the General Public.

Quinine Sulphate will be supplied to Hospitals and Dispensaries of this Presidency only at the wholesale rate of Rs. 18 per lb., irrespective of quantities. For all other purchasers the rates given above will apply.

Five and ten boxes of Quinine Tablets are sold to the public at the concession rates which will be intimated on application.

Provinces other than Bengal, Bihar and Orissa and Assam will get their supplies of Sulph. Quinine from the Director, Botanical Survey of India, Sibpur, Howrah.

Local sale at the jail gate from 10 to 12 noon.

The system of payment is by—*Cash in advance*—by "*Treasury Challans*," which should accompany the order or indent.

In cases where this is not possible, payment should be made by "*Remittance Transfer Receipts*" or crossed "*Cheques.*"

Indents unaccompanied by cash in advance will be sent Value Payable Post. Credit sale is not allowed except under special circumstances.

In the case of *Government officers* payments will be recovered by *Book Transfer, i.e., Countersigned Invoices*, in the event of *Cash* not accompanying the indent by "*Treasury Challans*," *Remittance Transfer Receipt or Cheque.*

2. Price and postage must accompany the price of the drug (when the drug is required by post).

The name of the Railway and Steamer Station or Post Office must be written distinctly when the parcels are required by Rail, Steamer or by Post. Railway parcels are sent by passenger train only.

A scale of postage is given below.

	1 oz.	2 ozs.	4 ozs.	½ lb.	¾ lb.	1 lb.
	As.	As.	As.	As.	As.	Rs. A.
Quinine Sulph. ..	..	..	7	7	11	0 11
Cinchona Feb. ..	..	..	7	7	11	0 11
Cinchona Feb. Tablets	..	..	7	7	11	0 11
Quinoidine Tablets ..	..	..	..	..	..	1 13
Quinine Hydrochlor. ..	5	5	7	7	..	0 11
Quinine Di-hydrochlor.	5	5	7	7	..	0 11
Quinine Tablets ..	..	..	7	7	11	0 11

	1½ lb.	2 lb.	3 lb.	4 lb.	5 lb.	6 lb.
	Rs. A.	Rs. A.	Rs. A.	Rs. A.	Rs. A.	Rs. A.
Quinine Sulph. ..	0 15	1 3	1 7	1 15	2 7	2 15
Cinchona Feb. ..	0 15	0 15	1 7	1 11	1 15	2 7
Cinchona Feb. Tablets	1 3	1 3	1 11	1 15	2 7	2 15
Quinoidine Tablets ..	..	2 3	3 3	..	..	..
Quinine Hydrochlor. ..	1 1	0 15	1 7	1 11	..	..
Quinine Di-hydrochlor.	1 1	0 15	1 13	2 5	..	..
Quinine Tablets ..	0 15	0 14	1 7	1 11	1 15	2 3

Two different drugs are not packed in the same parcel and postage must be paid separately for each kind.

N.B.—Postage stamps are not accepted as revenue.

Government reserve the right to alter the price without notice.

Registered No. C207

The Calcutta Gazette

THURSDAY, FEBRUARY 7, 1935.

PART IV

Bills introduced in the Bengal Legislative Council, Reports of Select Committees presented or to be presented to that Council, and Bills published before introduction in that Council.

BENGAL LEGISLATIVE COUNCIL DEPARTMENT.

NOTIFICATION.

No. 728L.C.—5th February, 1935.—The following report of the Select Committee on the Bengal Village Self-Government (Amendment) Bill, 1934, with the Bill as amended by the Committee, is hereby published for general information.

Report of the Select Committee on the Bengal Village Self-Government (Amendment) Bill, 1935.

We, the members of the Select Committee of the Bengal Legislative Council to which the Bengal Village Self-Government (Amendment) Bill, 1934, was referred by a motion carried in the Bengal Legislative Council on the 18th December, 1934, have the honour to submit this our report with the Bill embodying amendments recommended by us annexed. All matter recommended to be omitted by the Select Committee has been printed in italics and enclosed in square brackets and all new matter recommended to be inserted has been underlined.

2. The Bill was published in English in the *Extraordinary Calcutta Gazette* of the 6th December, 1934.

3. We do not consider that the Bill has been so altered by our recommendations as to require republication.

4. The Committee met for the first time on the 14th January, 1935, and concluded its sitting on the 17th January, 1935.

5. The more important changes made in the Bill are as follow :—

Clause 3, sub-clause (4).—We think it desirable to widen the franchise in the proposed section 7(*1*) (*iv*) as far as possible and have, therefore, recommended that those persons who have passed the Junior Madrassah or the Middle English or Middle Vernacular Examinations shall be entitled to vote.

Sub-clause (5).—We have retained the latter part of the existing Explanation to section 7(*2*) as being necessary.

We have also modified the new Explanation proposed by the Bill in order to make it less drastic and more practicable to work.

Clause 5.—We have made a necessary addition in proposed section 10A(*b*) to extend the disqualification for membership to persons who have been directed to execute a bond under section 110 of the Criminal Procedure Code, 1898.

In the proviso to proposed section 10A(*b*) we have substituted "District Magistrate" for "Commissioner" as we consider the former the proper authority for removing a disqualification under proposed section 10A(*b*).

Clause 6.—We have inserted a proviso in section 11 to provide that the former President shall continue till a new President is elected or appointed as the case may be, as this matter has given rise to difficulty in the past.

Clause 7.—We have supplied an obvious omission in section 17(*2*).

Clause 8, proposed section 17B.—We think it desirable that parties should be given the opportunity of being heard and of furnishing evidence in regard to election disputes referred to the District Magistrate and we have also provided a power of revision by the Commissioner of the orders of the District Magistrate.

Clause 9.—We have included "cattle disease" in proposed section 23(*1*)-(*viia*). This follows a suggestion of the Veterinary Department which we accept.

Clause 10.—The amendment proposed in section 26 (*4c*) is of a purely drafting character.

Clause 11.—We have made it clear in proposed section 26A that it is the duty of the union board, as a whole, and not specifically of the President, to report the outbreak of epidemic diseases to the health authorities.

We have added "cattle disease" to the proposed section and have also provided that outbreaks of the latter should be reported to the local veterinary authority. This is another suggestion of the Veterinary Department which we accept.

In proposed section 26B we have suggested that the approval for the grant of rewards should be that of the Chairman of the district board and not of the "District Magistrate" as the rewards are to be paid from union board funds.

Clause 14.—The majority of us think that it would be sufficient if the union boards' help, towards agricultural and technical teaching, is restricted to the grant of stipends to students only.

Clause 17.—The emendation made in proposed section 34(*4*) supplies an obvious omission.

Clauses 20 and 21.—The emendations made in sections 37, first paragraph, and 38(*1*) are important and are intended to make it clear—

(*1*) that if the owner or occupier is the same person he should not be taxed twice over, and

(*2*) that the assessment under section 38 should be solely in regard to the circumstances and property of the assessee within the union itself and not in regard to his circumstances outside the union.

We have omitted proposed section 38(*3*) as unnecessary.

Clause 25.—We have proposed an amendment to new section 55A to make the matter more specific.

Clauses 27 and 28.—The additions suggested by us are in the nature of safeguards.

Clause 30.—We have suggested a re-draft of proposed section 72A so as to provide that an offender may be released after due admonition.

We have also made a slight emendation in proposed section 72B as being necessary.

Clause 32.—We have, by a majority, recommended the omission of the proposed section 74A as we do not consider that the time is ripe for the grant of these powers even to selected union courts.

Clause 33.—We have recommended the omission of the proposed "Explanation" to section 81 and have proposed an emendation in the section itself to make it clear as to the latest time when the applicant should notify the court that he has applied or intends to apply for the transfer of the suit.

The other changes are consequential.

Clause 34, proposed section 90(1).—The words "an additional fee" are liable to misconstruction. We have omitted them to make the intention more clear.

The other changes are of a consequential character owing to the deletion of proposed section 74A.

Clause 36.—We have extended the disability contained in this clause, which was restricted to cases in which a member of the union board is interested, to cases in which the union board itself is interested.

Clause 37.—We have recommended certain important amendments in proposed section 100D by which—

(*1*) the order of removal by the Commissioner of a member of a union board or a union court shall be subject to the approval of the Local Government;

(*2*) the member against whom such an order is pending shall be given an opportunity of being heard in his defence.

The language generally follows that of section 62(*3*) of the Bengal Municipal Act, 1932.

New clause 39.—We have suggested an emendation in Schedule IV of the Act to provide that union benches shall not have jurisdiction over offences provided by the Act as we consider this desirable.

We recommend that the Bill, as reported on by us, be passed.

The official members or the Committee desire to make it clear that as the changes made in clauses 8, 28, 30, 33 and 36 require the previous sanction of the Governor General, they are unable to accept responsibility for them in the absence of such sanction.

*B. P. SINGH ROY.

Member-in-charge.

*G. S. DUTT.

*G. C. SEN.

*N. K. BASU.

*SATISH CHANDRA RAY CHOWDHURY

*HAJI BADI AHMED CHOWDHURY.

*SATISH CHANDRA MUKHERJI.

*KESHAB CHANDRA BANERJI.

*KHETTER MOHAN RAY.

W. H. THOMPSON.

MUAZZAM ALI KHAN.

SAILESWAR SINGH ROY.

JITENDRALAL BANNERJEE.

JOGESH CHANDRA SEN.

MUNINDRA DEB RAI MAHASAI.

TAMIZUDDIN KHAN.

MD. ABDUL MOMIN.

A. F. M. ABDUR RAHMAN.

J. W. McKAY,

Secretary to the Bengal Legislative Council.

*Signed subject to his minute of dissent annexed.

NOTE.—The signature of Rai Sahib Sarat Chandra Bal and Khan Bahadur Maulvi Emaduddin Ahmed had not been received up to the time of publishing the Report.

Joint minute of dissent by the Hon'ble Sir B. P. Singh Roy, Mr. G. S. Dutt and Rai Bahadur G. C. Sen.

Clause 32.—We consider that the Select Committee should not have omitted this clause, as the provisions in proposed section 74A relating to exclusive jurisdiction of union courts for the trial of specified classes of suits confer a privilege on the people and are intended to bring simple justice to the door of the villagers, and save them from expensive litigation. The provisions of the section are permissive in character and they do not apply automatically to all courts. Adequate safeguards have been provided. It is proposed therefore to move an amendment for reinsertion of the clause during the consideration of the Bill.

Minute of dissent by Mr. N. K. Basu, M.L.C.

Clause 6(2).—I think section 11 needs further amendment. What will happen if the old President is not a member of the new Board ?

In my opinion, the old Board, and not the President alone, should function till a new President came in.

Clause 8.—I cannot agree to the opening words of proposed section 17A: "No election of a member of a union board shall be called in question in any court, and ".

I have never been able to reconcile myself to the ousting of Judicial authority.

Clause 25.— The same remark as noted under clause 6(*2*) applies to the proviso here.

Clause 28.—I very strongly object to this clause. The time is not yet ripe for this sort of legislation. It will lead to corruption, injustice and denial of justice.

The reasons for omitting clause 32 apply with much greater force here.

Clause 33. The words should be "any evidence *is* taken in " and "not any evidence taken in ".

Minute of dissent by Babu Satish Chandra Ray Chowdhury, M.L.C.

I sign the Report subject to the following minute of dissent :—

Clause 8 (proposed section 17B).—I think the jurisdiction of the civil courts should not be ousted especially on questions of law, but to cut down frivolous disputes some sort of penal clause may be added.

Clause 28.—The reasons which led the Select Committee to omit clause 32 of the Bill should have also led them to omit clause 28 which proposes to give selected union benches exclusive jurisdiction. In fact, the reasons apply with even greater force to the latter, because civil claims are generally backed by documents of some kind or other and the loss involved in case of failure of justice is of money only ; but in criminal trials, a failure of justice—involved in wrong convictions—has very far-reaching consequences. The man convicted looses his character in the eyes of the public and looses his self-respect too ; and whenever he has to turn up thereafter in courts he is at a tremendous disadvantage. The chances of wrongful convictions and wrongful acquittals are also very great as most of our villages are torn by factions and parties given rise to often by ludicrously slight causes which it is difficult to establish legally before a Magistrate, the safeguards added therefore being quite illusory. Then some of the sections relating to which exclusive jurisdiction is proposed to be given involves very delicate questions of law, *e.g.*, what amounts to grave and sudden provocation. It is difficult to expect right decision in many cases especially when lawyers are excluded. The healthy checks on vagaries of Courts and Magistrates provided by our Codes, such as full recording of evidence, testing of the same by cross-examination by lawyers, appeals on facts and law, are all absent in the case of union courts and benches. Many therefore not unreasonably think that this drastic clause will result in installing undiluted autocracy and establishing Star Chambers in many of our villages making it difficult for decent people to lead a decent life therein. It may be that in some cases union courts and benches have acquitted themselves well ; but if confidential information is gathered from district and subdivisional officials such cases will be found to be few and far between, whereas instances of gross failures will be found to be too pathetic and too many. Past experience in similar matters shows that selection of union benches for investing them with exclusive jurisdiction cannot always be wise and unerring for obvious reasons. It is contended that such increased powers will bring more revenue to the union boards. The simple answer is that no such mercinary considerations should be allowed to affect or jeopardise the purity of the administration of justice. I might go even further and say that these self-governing institutions should have no direct connection with the administration of justice. Our municipalities and district boards have no less public utility because they do not exercise judicial functions. Lastly, all parts of the country are not equally advanced in education and outlook. We should therefore be content to wait instead of rushing into an unchartered sea.

Minute of dissent by Haji Badi Ahmed Chowdhury, M. L. C.

Bill clause 32.—I do not agree to the omission of this clause.

Minute of dissent by Rai Bahadur Satish Chandra Mukherji, M. L. C.

I enjoin the following minute of dissent, namely :—

Clause 3 (4).—In my opinion with the drastic change in proposed section 7(*1*) (*iv*) the retention of the proviso limiting membership of a joint undivided family to one person is illogical and the proviso should be omitted.

Clauses 12 and 13.—In sub-section (*3*) of section 27 and in sub-section (*4*) of section 28 I want to add the following words, namely :—

" Or within such further time as may be allowed by the appellate authority."

Clause 20(1).—In section 37 I want to add the word " permanent " between the words " owners " and " occupiers."

Clause 21.—In section 38 I want to keep the following words, namely :—

" circumstances and the property held within the union." This will remove the controversy whether money earned outside but spent inside the union is taxable. In my opinion the proposed amendment by the Select Committee does not dispose of this controversy.

Clause 28.—I want to omit proposed section 66A like proposed section 74A. There is no sufficient reason to discriminate between the two sections. Secondly, I am not in favour of the addition of the last few lines to the proviso of the proposed section as it unnecessarily restricts the exercise of the discretion of the officers mentioned therein.

Minute of dissent by Rai Bahadur Keshab Chandra Banerji, M. L. C.

Clause 3, sub-clauses (1), (2) and (3).—The electorate is proposed to be widened in two ways, *viz.*, (*i*) by lowering the minimum franchise qualifications, and (*ii*) by including educational qualifications. I am entirely at one with the Committee so far as the latter is concerned. But I regret to have to differ from the majority in regard to the provisions for the lowering of the franchise qualifications to eight annas as cess and six annas as union rate as originally proposed in the Bill. The franchise is a sacred trust and it must be exercised with due caution and with a full sense of responsibility. The arguments against adult franchise in India apply here too. If the voters have no education, they cannot be expected to record their votes with due care and consideration. I am, therefore, of opinion that the time is not yet ripe when anybody who pays union rate should have the right to vote at a union board election. I think we should wait until the Bengal (Rural) Primary Education Act, 1930, has been in operation for some years in Bengal and the masses have been sufficiently educated so that they may appreciate the value of franchise, the sacred trust reposed in them.

Clauses 28 and 32.—The proposal in the original Bill to confer " exclusive jurisdiction " upon certain selected union benches and courts in regard to any or all classes of suits or cases triable by them does not appear to be at all desirable.

I entirely agree with the majority that the time has not come for the grant of such powers even to selected union courts.

For the same reasons, I do not agree that the same privilege should be extended to selected union benches also. The arguments against the grant of such power to union courts apply with equal force, if not greater, to union benches as well. The safeguards suggested by the Select Committee are not adequate. I am in favour of entirely omitting proposed sections 66A, 72A and 72B along with proposed section 74A.

The union benches have been enjoying concurrent jurisdiction for some time. Has the experiment been perfectly satisfactory ? Has there been no miscarriage of justice ? Have not the District Magistrates in some cases found it necessary to withdraw the concession from a large number of union benches and courts ? The fact that Government have found it necessary to confer upon the Divisional Commissioners power to remove members of benches and courts has a tale to tell. I am very strongly of opinion that considering their past record, the union benches, not even a selected few, should be given the privilege of "exclusive jurisdiction" for offences triable by them. There are other cogent reasons for which I consider it inadvisable at present to invest the union benches with the power contemplated in the proposed sections referred to above.

I sign the report subject to the above minute of dissent.

Minute of dissent by Babu Khetter Mohan Ray, M.L.C.

Clause 14.—In proposed section 31A, clause (*a*) should not be omitted. The union board should have power to make such grants as mentioned in clause (*a*) for the propagation of agricultural education amongst the rural population. The principle is accepted by the Select Committee when they have approved clause (*b*).

Clause 28.—This clause should be omitted. To empower the union bench with exclusive jurisdiction to try certain offences is a dangerous experiment in the present state of development of the union boards in general. The criminal courts should not be ousted of its ordinary jurisdiction over this class of offences.

There are other points on which I do not agree with the majority, which I shall try to get rectified by way of amendments at the time of the second reading of the Bill in the Council.

THE BENGAL VILLAGE SELF-GOVERNMENT (AMENDMENT) BILL,

[*1934*] **1935**.

CONTENTS.

Clause.

1. Short title.
2. Amendment of section 4 of Bengal Act V of 1919.
3. Amendment of section 7.
4. Amendment of section 10.
5. Insertion of new section 10A—
   10A. Disqualifications from being a member of a union board.
6. Amendment of section 11.
7. Amendment of section 17.
8. Insertion of new sections 17A, 17B and 17C—
   17A. Bar to interference by courts in election matters.
   17B. Election disputes. [*to be decided by the district magistrate.*]
   17C. Validation of acts and proceedings.
9. Amendment of section 23.
10. Amendment of section 26.
11. Insertion of new sections 26A and 26B—
   26A. Reports of epidemic or cattle diseases.
   26B. Power to union boards to grant rewards for information of the outbreak of any epidemic disease.
12. Amendment of section 27.
13. Amendment of section 28.
14. Insertion of new section 31A—
   31A. [*Grants and*] stipends.
15. Amendment of section 32 in certain areas.
16. Amendment of section 32A.
17. Substitution of new section for section 34—
   34. Prohibition of certain offensive and dangerous trades without licenses.
18. Amendment of section 35.
19. Amendment of section 36.
20. Amendment of section 37.
21. Amendment of section 38.
22. Substitution of new section for section 43—
   43. Distraint and sale of property beyond the limits of the union.
23. Insertion of new section 44A—
   44A. Disposal of surplus sale-proceeds.
24. Amendment of section 46.
25. Insertion of new section 55A—
   55A. Power to dissolve a union board.
26. Amendment of section 65.
27. Amendment of section 66.
28. Insertion of new section 66A—
   66A. Jurisdiction of selected union benches.
29. Amendment of section 72.
30. Insertion of new sections 72A and 72B—
   72A. Power of union bench to release certain offenders after admonition or on probation of good conduct.
   72B. Power of union bench to permit compounding of offences.
31. Amendment of section 74.
[*32. Insertion of new section 74A—*
   74A. Jurisdiction of selected union courts.]
33. Amendment of section 81.
34. Substitution of new section for section 90—
   90. Fees.
35. Repeal of section 92.
36. Substitution of new section for section 95—
   95. Union bench or union court not to try case or suit in which the local union board or any [*a*] member is interested.
37. Insertion of new sections 100A to 100D—
   100A. Resignation of a member of union bench or union court.
   100B. Casual vacancies.
   100C. Delegation of powers by the Local Government.
   100D. Removal of a member of union bench and union court.
38. Amendment of section 101.
39. Amendment of Schedule IV.

THE BENGAL VILLAGE SELF-GOVERNMENT (AMENDMENT) BILL, [*1934*] 1935.

(Embodying amendments recommended by the Select Committee.)

[NOTE.—All matter omitted by the Select Committee has been printed in italics and enclosed in square brackets and all new matter inserted has been underlined.]

A

BILL

further to amend the Bengal Village Self-Government Act, 1919.

WHEREAS it is expedient further to amend the Bengal Village Self-Government Act, 1919, in the manner hereinafter appearing ; Ben. Act V of 1919.

AND WHEREAS the previous sanction of the Governor General has been obtained under sub-section (*3*) of section 80A of the Government of India Act to the passing of this Act ; 5 & 6 Geo. V, c. 61 ; 6 & 7 Geo. V, c. 37 ; 9 & 10 Geo V, c. 101

It is hereby enacted as follows :—

Short title.

1. This Act may be called the Bengal Village Self-Government (Amendment) Act, 1935.

Amendment of section 4 of Bengal Act V of 1919.

2. To clause (*9*) of section 4 of the Bengal Village Self-Government Act, 1919 (hereinafter referred to as the said Act) the words "and includes an additional subdivisional magistrate" shall be added.

Amendment of section 7.

3. In section 7 of the said Act,—

(*1*) in clause (*i*) of sub-section (*1*) for the words "one rupee" the words "eight annas" shall be substituted ;

(*2*) in clause (*ii*) of sub-section (*1*) for the words "one rupee" the words "six annas" shall be substituted ;

(*3*) in clause (*iii*) of sub-section (*1*)—

(*a*) for the words "one rupee" the words "eight annas" shall be substituted, and

(*b*) after the words "as such cess" the words "or than six annas as such" shall be inserted ;

(*4*) after clause (*iii*) of sub-section (*1*) the following word and clause shall be inserted, namely :—

"or

(*iv*) who is a graduate or licentiate of any university or has passed the matriculation examination of the Calcutta University, or a corresponding standard of the same or any other university, or the high school examination of the board of intermediate and secondary education, Dacca, or the senior or junior madrasah examinations under the old or the reformed scheme, or the sanskrit title examination of the Calcutta sanskrit association, or the middle english or the middle vernacular examinations or is a registered medical practitioner under the Bengal Medical Act, 1914, or holds a certificate authorising him to practise as a pleader or as a *muktear* or as a revenue agent ;" Ben. Act VI of 1914.

The Bengal Village Self-Government (Amendment) Bill, 1935.

(*Clauses 4—7.*)

(5) for the explanation at the end of sub-section (2) the following explanation shall be substituted, namely :—

"*Explanation.*—A person shall be deemed to be 'resident' within a union within the meaning of sub-section (2), if he has within the limits of such union a fixed place of abode which he visits [*not less than twice a month*] from time to time or if he ordinarily resides within such union for not less than [*six*] three months in a year. No person may be so resident within the limits of more than one union at the same time."

Amendment of section 10.

4. In section 10 of the said Act, for the word "nominated" the word "appointed" shall be substituted.

Insertion of new section 10A.

5. After section 10 of the said Act the following section shall be inserted, namely :—

"10A. A person shall not be eligible for election or appointment as a member of a union board if such person—

Disqualifications from being a member of a union board.

(*a*) is an officer or servant of the union board, or

(*b*) has been ordered to execute a bond in pursuance of proceedings under section 110 of the Code of Criminal Procedure, 1898, or has been convicted by a criminal court of any such offence as in the opinion of the Local Government involves moral turpitude and which carries with it a sentence of transportation or imprisonment for a period of more than six months, unless the offence for which he was convicted has been pardoned or five years have expired from the date of the expiration of the period specified in the bond, or of the sentence, as the case may be :

[*Cf.* Ben Act XV of 1932, s. 22(2).]

Act V of 1898.

Provided that, on application made by a person disqualified under clause (*b*), the [*commissioner*] district magistrate may remove the disqualification by an order made in this behalf."

Amendment of section 11.

6. In section 11 of the said Act,—

(1) for the words "three years" in both places where they occur the words "four years" shall be substituted, and

(2) to the same section the following proviso shall be added, namely :—

"Provided that the tenure of office of the former president of the union board shall continue until a new president is elected or appointed under section 8."

Amendment of section 17.

7. In section 17 of the said Act,—

(1) for the words "a new," wherever they occur, the words "another person to be" shall be substituted, and

(2) in sub-section (2), after the words "appoint" the words "from among members of the union board" shall be inserted.

The Bengal Village Self-Government (Amendment) Bill, 1935.

(Clauses 8—10.)

Insertion of new sections 17A, 17B and 17C.

8. After section 17 of the said Act the following sections shall be inserted, namely :—

" 17A. No election of a member of a union board shall be called in question in any court, and no court shall grant an injunction— [*Cf.* Ben. Act XV of 1932, s. 43.]

Bar to interference by courts in election matters.

(*i*) to postpone the election of a member of a union board, or

(*ii*) to prohibit a person, declared to have been duly elected under this Act, from taking part in the proceedings of a union board of which he has been elected a member, or

(*iii*) to prohibit the members formally elected or appointed for a union board from entering upon their duties.

17B. If any dispute arises as to the election of a union board, the matter shall be referred to the district magistrate who shall decide the same after giving notice to the parties concerned and after taking such evidence as may be produced. The order of the district magistrate shall, within thirty days from the date thereof, be subject to revision by the commissioner whose decision shall be final and shall not be questioned in any court." [*Cf.* Ben. Act XV of 1932, s. 49.]

Election disputes. [*to be decided by the district magistrate.*]

17C. No act done or proceeding taken under this Act shall be questioned on the ground merely of— [*Cf.* Ben. Act III of 1923, s. 79(*1*).]

Validation of acts and proceedings.

(*a*) the existence of any vacancy in, or any defect in the constitution of, the union board, or

(*b*) any defect or irregularity not affecting the merits of the case."

Amendment of section 23.

9. In sub-section (*1*) of section 23 of the said Act,—

(*1*) for sub-clause (*f*) of clause (*ii*) the following sub-clause shall be substituted, namely :—

"(*f*) any person reasonably suspected of being a deserter from His Majesty's Army, Navy or Air Force ; and "

(*2*) after clause (*vii*) the following clause shall be inserted, namely :—

"(*viia*) he shall give immediate information to the president of the union board of the outbreak of any epidemic disease or cattle disease ;"

Amendment of section 26.

10. In clause (*4a*) of section 26 of the said Act, the word "and" at the end shall be omitted and after that clause the following clauses shall be inserted, namely :—

"(*4b*) may undertake and carry out measures for the improvement and development of cottage industries and may employ the staff requisite for such purpose ;

(*4c*) may undertake and carry out measures for the furtherance of public health within the union and may, subject to any rules made under section 101, employ the staff requisite for such purpose, and [*a union board*] may, for such purpose, join with any other union board or boards in the same district in the manner provided in section 32AA ; and "

The Bengal Village Self-Government (Amendment) Bill, 1935.

(Clauses 11—14.)

Insertion of new sections 26A and 26B.

11. After section 26 of the said Act the following sections shall be inserted, namely :—

"26A. The [*president of a*] union board shall immediately on receipt of information of the outbreak of any epidemic disease or cattle disease send simultaneous reports of such information to the district health officer and to the local sanitary inspector of the district board or to the local veterinary assistant surgeon, as the case may be.

Reports of epidemic or cattle diseases.

26B. The union board may, with the approval of the [*district magistrate*] chairman of the district board and subject to any rules made under section 101, grant rewards to medical practitioners or other persons for giving prompt information to the union board of the outbreak of any epidemic disease."

Power to union boards to grant rewards for information of the outbreak of any epidemic disease.

[*Cf.* Ben. Act III of 1885, s. 100(*1a*).]

Amendment of section 27.

12. After sub-section (*3*) of section 27 of the said Act the following sub-section shall be added, namely :—

"(*4*) Without prejudice to the provisions of sub-section (*2*), if any person fails to comply with a notice issued under clause (*b*) of sub-section (*1*) or, in the case of an appeal under sub-section (*3*), with an order modifying or confirming such a notice within a reasonable period from the date of such order, he shall be punished with a fine which may extend to twenty-five rupees and to a further fine which may extend to five rupees for each day after conviction during which he so fails."

Amendment of section 28.

13. After sub-section (*4*) of section 28 of the said Act the following sub-section shall be added, namely :—

"(*5*) Without prejudice to the provisions of sub-section (*3*), if any person fails to comply with a notice issued under sub-section (*2*), or, in the case of an appeal under sub-section (*4*), with an order modifying or confirming such a notice within a reasonable period from the date of such order, he shall be punished with a fine which may extend to twenty-five rupees and to a further fine which may extend to five rupees for each day after conviction during which he so fails."

Insertion of new section 31A.

14. After section 31 of the said Act the following section shall be inserted, namely :—

Stipends.

"31A. The union board may—

[*Grants and stipends.*

(*a*) *make grants to any—*

(*i*) *middle english school,*

(*ii*) *high english school, or*

(*iii*) *other secondary school,*

which holds agricultural classes, or to any technical school, situated within the union, and]

The Bengal Village Self-Government (Amendment) Bill, 1935.

(*Clauses 15—17.*)

[(*b*)] grant a stipend to any student having a place of residence within the union who is pursuing his studies in any—

(*i*) middle english school,

(*ii*) high english school, or

(*iii*) other secondary school,

which holds agricultural classes, and who attends such classes or in any technical school, situated within the same district as the union."

Amendment of section 32 in certain areas.

15. In sub-section (*1*) of section 32 of the said Act, as in force in areas in which the Bengal (Rural) Primary Education Act, 1930, is not in force, after the words and figures "under section 101" the words "make grants to primary schools" shall be inserted. Ben. Act VII of 1930.

Amendment of section 32A.

16. Section 32A of the said Act as inserted by the Bengal (Rural) Primary Education Act, 1930, shall be renumbered as sub-section (*1*) of that section and after sub-section (*1*) as now renumbered the following sub-section shall be added, namely :—

"(*2*) The union board may, subject to any rules made under section 101, and to the control of the district school board constituted under the Bengal (Rural) Primary Education Act, 1930, make grants to primary schools which are recognised under section 54 of the said Act."

Substitution of new section for section 34.

17. For section 34 of the said Act the following section shall be substituted, namely :—

"34. (*1*) No place within a union shall be used without a license granted by the union board (which shall be renewable annually) for any trade or business declared by the Local Government by notification to be offensive or dangerous. Prohibition of certain offensive and dangerous trades without licenses.

(*2*) In every notification under sub-section (*1*) the Local Government shall specify the maximum amount of fees which may be levied by a union board for a license in respect of any trade or business declared in such notification to be offensive or dangerous.

(*3*) Subject to the approval of the district magistrate, the union board may levy in respect of any license granted by it under sub-section (*1*) a fee not exceeding the maximum amount specified under sub-section (*2*), and may impose such conditions in respect of such license as may be considered necessary.

(*4*) Whoever, in any union, uses without a license any place for the purpose of any trade or business declared under sub-section (*1*) to be offensive or dangerous, or fails to comply with any condition subject to which a license is granted under that sub-section, shall be punished with a fine which may extend to twenty-five rupees, and to a further fine which may extend to five rupees for each day after conviction during which he continues so to offend.

(*5*) The union board, upon the conviction of any person for failing to comply with any condition of a license granted under sub-section (*1*), may suspend or cancel such license.

The Bengal Village Self-Government (Amendment) Bill, 1935.

(*Clauses 18—22.*)

(*6*) An appeal shall lie to the district magistrate against every order by a union board refusing, suspending or cancelling a license, and the decision of the district magistrate thereon shall be final."

Amendment of section 35.

18. In section 35 of the said Act,—

(*1*) the words, figures and brackets, "clause (*1*) of section 26 or" shall be omitted, and

(*2*) after the word "section" the figures "26" shall be inserted.

Amendment of section 36.

19. To section 36 of the said Act the following proviso shall be added, namely :—

"Provided that no member of a union board shall be appointed to be an officer or servant of such union board."

Amendment of section 37.

20. In section 37 of the said Act :—

(*1*) for the words "the owners or occupiers" the words ["*both the owners and occupiers*"] "persons who are owners or occupiers or owners and occupiers" shall be substituted ; and

(*2*) in clause (*b*), for the words "not less than two-thirds of" the words "more than half" shall be substituted.

Amendment of section 38.

21. In sub-section (*1*) of section 38 of the said Act, for the words "the circumstances and the property within the union" the words "the circumstances within the union and property within the union, if any" shall be substituted—

[(*1*) *in sub-section* (*1*) *after the words "the property" the words "if any" shall be inserted, and*

(*2*) *after sub-section* (*2*) *the following sub-section shall be added, namely* :—

"(*3*) *The union board may, either wholly or partially, exempt from the imposition of the rate under section 37 both the owner and occupier of a building which is used exclusively for purposes of public charity.*"] [*Cf. Ben. Act XV of 1932, s. 124* (*2*).]

Substitution of new section for section 43.

22. For section 43 of the said Act the following section shall be substituted, namely :—

"43. (*1*) If the union board is unable to recover under section 41 the amount due for the arrear of rate and the penalty, the district magistrate may, on the application of the union board, issue his warrant to any officer of his court for the distress and sale of a sufficient portion of the movable property of the defaulter within any other part of the jurisdiction of the magistrate, or may issue a warrant for the distress and sale of a sufficient portion of the movable property of the defaulter within the jurisdiction of any other magistrate exercising jurisdiction within Bengal who shall endorse the warrant so issued and cause it to be executed by an officer of his court.

Distraint and sale of property beyond the limits of the union.

(*2*) The provisions of section 42 shall apply to the distress and sale under this section.

The Bengal Village Self-Government (Amendment) Bill, 1935.

(*Clauses 23—27.*)

(*3*) In case the amount of penalty realised does not cover the cost of the distress and sale the district magistrate shall realise from the defaulter such cost in addition to the amount due for arrear of rate and the penalty.

(*4*) On execution of a warrant issued under this section the amount realised shall be remitted to the union board."

Insertion of new section 44A.

23. After section 44 of the said Act the following section shall be inserted, namely :— [*Cf.* Ben Act XV of 1932, s. 159 (*2*).]

"44A. The surplus sale-proceeds (if any) under sections 41 and 43 may be paid on demand to any person who establishes his right thereto to the satisfaction of the union board or in a court of competent jurisdiction."

Disposal of surplus sale-proceeds.

Amendment of section 46.

24. In sub-section (*1*) of section 46 of the said Act, for the word and figures "section 41" the words and figures "sections 41 and 43" shall be substituted.

Insertion of new section 55A.

25. After section 55 of the said Act the following section shall be inserted, namely :— [*Cf.* Ben. Act XV of 1932, s. 552 and Ben. Act V of 1919, s. 56.]

"55A. If the commissioner, after consideration of the views of the district magistrate and the district board, is of opinion that a union board is not competent to perform, or persistently makes default in the performance of, the duties imposed upon it by or under this or any other Act, or exceeds or abuses its powers, the commissioner may, with the approval of the Local Government, by an order in writing specifying the reasons for so doing, direct that a fresh general election shall be held, and fresh appointments shall be made immediately of persons to be members of the union board ; and from the date on which [*such new election and appointments have been completed*] the district magistrate shall declare the board to be duly reconstituted the former members of the board shall, unless they are re-elected or re-appointed, vacate their offices :

Power to dissolve a union board.

Provided that the tenure of office of the former president of the board shall continue until a new president is elected or appointed under section 8."

Amendment of section 65.

26. In section 65 of the said Act, after the words "its jurisdiction" the words "or transferred to the bench by a district magistrate or subdivisional magistrate" shall be added.

Amendment of section 66.

27. After clause (*b*) of the proviso to section 66 of the said Act the following clause shall be added, namely :—

"(*c*) the district magistrate or subdivisional magistrate may, with the consent of the parties transfer any case cognizable by a union bench, if the place of residence of the complainant is situated in a union for which there is no union bench, to any union bench situated at a distance from such place of residence convenient, in the opinion of the magistrate, for the parties and witnesses."

The Bengal Village Self-Government (Amendment) Bill, 1935.

(Clauses 28—30.)

Insertion of new section 66A.

28. After section 66 of the said Act the following section shall be inserted, namely :—

"66A. The Local Government may, by notification, direct that any union bench mentioned therein shall, notwithstanding anything contained in the Code of Criminal Procedure, 1898, have jurisdiction, to the exclusion of that of the criminal court within the local limits of whose jurisdiction the union is situated, for the trial of such of the offences specified in schedule IV as may be mentioned in the notification if committed within the limits of the jurisdiction of such union bench :

Jurisdiction of selected union bench.

Act V of 1898.

Provided that the district magistrate or sub-divisional magistrate may, at any time, transfer any case from any such union bench [*to another union bench or*] to any court subordinate to him or to his own file and shall so transfer any case if he is satisfied that there are good grounds for apprehension that a fair and impartial trial cannot be had before the union bench."

Amendment of section 72.

29. In section 72 of the said Act,—

(*1*) to sub-section (*1*), the following proviso shall be added, namely :—

"Provided that the Local Government may, by notification, direct that any union bench mentioned therein may sentence any offender convicted by it to pay a fine not exceeding fifty rupees or in default to imprisonment for a period not exceeding fourteen days.";

(*2*) after sub-section (*1*) the following sub-section shall be inserted, namely :—

"(*1a*) when a union bench imposes a fine under sub-section (*1*), it may, when passing the order, direct that the whole or any part of the fine recovered shall be applied in payment of compensation for any loss or injury caused by the offence ";

(*3*) in sub-section (*2*)—

(*a*) after the words "exceeding twenty-five " the brackets, figure and words "[or, in the case of a union bench empowered under the proviso to sub-section (*1*), fifty] " shall be inserted ; and

(*b*) after the words "exceeding seven " the brackets, figure and words "[or, in the case of a union bench empowered under the proviso to sub-section (*1*), fourteen] " shall be inserted ; and

(*4*) in sub-section (*4*) before the words "All fines " the words "Subject to the provisions of sub-section (*1a*) "shall be prefixed.

Insertion of new sections 72A and 72B.

30. After section 72 of the said Act the following sections shall be inserted, namely :—

"72A. When any person is convicted by a union bench of an offence punishable under sub-section (*1*) of section 72 and no previous conviction is proved against him, if it appears to the said bench that, regard being

Power of union bench to release certain offenders after admonition or on probation of good conduct.

The Bengal Village Self-Government (Amendment) Bill, 1935.

(*Clauses 31, 32.*)

had to the age, character and antecedents of the offender and to the circumstances in which the offence was committed, it is expedient—

(*a*) that the offender should be released after due admonition, the union bench may, instead of sentencing him to any punishment, release him after due admonition ; or

(*b*) that the offender should be released on probation of good conduct, the union bench may, notwithstanding anything contained in the Code of Criminal Procedure, 1898, instead of sentencing him at once to any punishment, direct that he be released on his executing a bond for a sum not exceeding fifty rupees to appear and receive sentence when called upon during such period (not exceeding one year) as the union bench may direct, and in the meantime to keep the peace and be of good behaviour. Act V of 1898.

72B. Notwithstanding anything contained in the Code of Criminal Procedure, 1898, the union bench may allow [*any person*] the parties to compound any offence tried by such bench."

Power of union bench to permit compounding of offences.

Amendment of section 74.

31. In section 74 of the said Act,—

(*1*) in clause (*b*) the word "and" shall be omitted ; and

(*2*) after clause (*c*) the following word and clause shall be inserted, namely :—

"and

(*d*) suits for damages by cattle-trespass."

[*Insertion of new section 74A.*]

[**32.** *After section 74 of the said Act the following section shall be inserted, namely* :—

"*74A. The Local Government may, by notification, direct that any union court mentioned therein shall, notwithstanding anything contained in the Bengal, Agra and Assam Civil Courts Act, 1887, the Provincial Small Cause Courts Act, 1887, and the Code of Civil Procedure, 1908, and subject to the provisions of sections 75 and 76, have jurisdiction, to the exclusion of that of the ordinary civil court within the local limits of whose jurisdiction the union is situated, for the trial of such of the classes of suits specified in section 74, up to such value (not exceeding two hundred rupees), as may be mentioned in the notification* :]

Jurisdiction of selected union courts.

XII of 1887. — IX of 1887. Act V of 1908.

[*Provided that—*

(*i*) *on the application of any defendant made in accordance with the provisions of section 81, the court of small causes or the court of the munsif within the local limits of whose jurisdiction the union is situated may, notwithstanding anything contained in clause (ii) of the proviso to section 74, transfer any suit from any such union court to another union court or withdraw it from any such union court for trial by itself if it is satisfied that there are good grounds for apprehension that a fair and impartial trial cannot be had in the union court* ;

The Bengal Village Self-Government (Amendment) Bill, 1935.

(Clauses 33, 34.)

(ii) on the application of any person who desires to file a suit triable by any such union court but is unwilling to file the suit in that court, the court of small causes or court of the munsif within the local limits of whose jurisdiction the union is situated may, if it is satisfied that there are good grounds for apprehension that a fair and impartial trial cannot be had in such union court, grant permission to such person to file the suit either before itself or before such other union court as it may direct ; and thereupon the provisions of clause (i) of this proviso shall, so far as may be, apply to the proceedings in such union court."]

Amendment of section 81.

33. [*(1)*] In section 81 of the said Act, for the words "the commencement of the hearing of" the words "any evidence taken in" shall be substituted : [*after the words "court of the munsif" the words "or under the proviso to section 74A for transfer or withdrawal of the suit" shall be inserted.*

(2) To section 81 of the said Act the following Explanation shall be added, namely :—

"Explanation.—For the purposes of this section, the suit shall be deemed to commence when the defendant answers the suit either orally or in writing."]

Substitution of new section for section 90.

34. For section 90 of the said Act the following section shall be substituted, namely :—

"90. *(1)* In all suits instituted in a union court a fee of one anna in the rupee shall be payable in advance by the plaintiff on the amount of the claim up to twenty-five rupees, and [*an additional fee*] of half-an-anna for every rupee of the claim above twenty-five rupees, and such fees shall, on receipt, be credited to the union fund and shall not be paid to either party : Fees.

Provided that, if any suit is transferred from a union court under section 74 [*or section 74A,*] no further fee shall be payable on this account in the court to which the suit is transferred, and the fee already paid by the plaintiff shall, notwithstanding anything contained in section 46, be paid from the union fund—

[*(a)*] to the Local Government, [*if the suit is transferred to the court of small causes or the court of the munsif ;*]

[*(b) to the union fund concerned, if the suit is transferred to another union court,*]

and thereafter the provisions of sub-section *(2)* shall, so far as may be, apply to the proceedings in the court to which the suit is transferred.

(2) If the claim is decreed in full, an amount equal to the fee shall be realised from the judgment-debtor together with the amount decreed.

(3) If the claim is decreed in part, an amount equal to a proportionate part of the fee shall be realised from the judgment-debtor together with the amount decreed.

(4) Any amount realised under sub-section *(2)* or sub-section *(3)* shall be paid to the decree-holder."

The Bengal Village Self-Government (Amendment) Bill, 1935.

(*Clauses 35—37.*)

Repeal of section 92.

35. Section 92 of the said Act shall be omitted.

Substitution of new section for section 95.

36. For section 95 of the said Act the following section shall be substituted, namely :—

"95. No union bench or union court shall try any case or suit or other proceeding to or in which [*a member of the local union board*] the local union board or any member thereof is a party or [*personally*] is interested."

Union bench or union court not to try case or suit in which [*a*] the local union board or any member is interested.

Insertion of new sections 100A to 100D.

37. After section 100 of the said Act the following sections shall be inserted, namely :—

"100A. A member of a union bench or union court may resign during his term of office by notifying in writing his intention to do so to the district magistrate and, on such resignation being accepted by the district magistrate, shall be deemed to have vacated his office. [*Cf.* Ben. Act V of 1919, s. 15.]

Resignation of a member of union bench or union court.

100B. When the place of a member of a union bench or union court becomes vacant by his resignation or otherwise a new member shall be appointed by the Local Government in the manner provided by section 65 or section 73, as the case may be, and shall hold office so long as the member whose place he fills would have been entitled to hold office if such vacancy had not occurred : [*Cf.* Ben. Act V of 1919, s. 13.]

Casual vacancies.

Provided that the Local Government may with regard to union boards generally or to any union board or class of union boards and subject to such conditions or restrictions as it may deem fit to impose, by notification, delegate to the commissioner the powers of appointment of the Local Government under this section :

Provided also that no act of the union bench or union court shall be deemed to be invalid by reason only that the number of members of the union bench or union court at the time of the performance of such act was less than the prescribed number.

100C. The Local Government may with regard to union boards generally or to any union board or class of union boards and subject to such conditions or restrictions as it may deem fit to impose, by notification, delegate to the commissioner the power to reconstitute a union bench under section 65 or a union court under section 73. [*Cf.* Ben. Act XV of 1932, s. 544.]

Delegation of powers by the Local Government.

100D. (*1*) The commissioner may, subject to the approval of the Local Government by an order in writing, at any time, for good and sufficient reason to be stated in such order, remove a member of a union bench or union court.

Removal of a member of union bench and union court.

(*2*) Before removing a member under sub-section (*1*) the commissioner shall allow the member concerned an opportunity of being heard." [*Cf.* Ben. Act XV of 1932, s. 62 (3).]

The Bengal Village Self-Government (Amendment) Bill, 1935.

(*Clauses 38, 39.*)

Amendment of section 101.

38. In sub-section (*2*) of section 101 of the said Act,—

(*a*) in clause (*a*) the words "and determining the authority who shall decide disputes relating to such elections" shall be omitted ;

(*b*) after clause (*jj*) the following clauses shall be inserted, namely :—

"(*jj1*) prescribing the pay and qualifications of staff required for the furtherance of public health under section 26 ;

(*jj2*) regulating the powers of the union board to grant rewards under section 26B; " ;

(*c*) after clause (*q*) the following clause shall be inserted, namely :—

"(*qq*) regulating the procedure for the transfer of criminal cases from union benches and of civil suits from union courts and for the retrial of civil suits under the proviso to section 88 ; ".

Amendment of schedule IV.

39. In item 2 of schedule IV to the said Act, for the brackets and words "(other than the Indian Penal Code)" the brackets and words "(other than the Indian Penal Code and this Act)" shall be substituted.

J. W. McKAY,

Secy. to the Bengal Legis. Council.

Registered No. C207

No. 6 of 1935

The Calcutta Gazette

THURSDAY, FEBRUARY 7, 1935.

CONTENTS:

	PAGE.
Statement under the Cotton Ginning and Pressing Factories Act, 1925 ..	215
Return of Vital Statistics for the month of July 1934	216—221
Calcutta Improvement Trust Notices ..	222
Corporation of Calcutta Notice ..	222
Weather and Crop Report for the week ending 30th January 1935	223—226
Abstract statement showing the approximate volume of traffic and tollage on canals in Bengal classed as Major and Minor Works and Navigation for the month of December 1934	227
Area leased for irrigation up to end of December 1934	228
Vital Statistics of towns of Bengal for the weeks ending 19th and 26th January 1935	229—230
Statements of weekly gauge readings on certain rivers in Bengal	231 & 236
Statements showing water levels of certain rivers in Bengal for the months of October and November 1934 ..	232—235
Resolution on the Seventy-second Annual Report of the Government Cinchona Plantations and Factory in Bengal for the year 1933-34	237—238
Resolution under section 7 (2) of the Garden Reach Municipality Act, 1932 ..	239—251

SUPPLEMENT.

Official Papers.

FORM C—BENGAL.

STATEMENT OF COTTON PRESSED IN THE BENGAL PRESIDENCY FOR THE WEEK ENDING THE 25th JANUARY 1935.

[Section 5(2) of the Cotton Ginning and Pressing Factories Act, 1925.]

Name of Division or block.	Number of bales pressed.				Districts included in the block.
	During the week.	During the corresponding week last year.	Since 1st September 1934 (the date prescribed by the Local Government as the commencement of the season).	During the corresponding period last year.	
The Bengal Presidency	544 or 540·28 bales of 400 lbs. each.	684	3,564	4,989	All districts in the Presidency.

J. B. McBRIDE,

Chief Inspector of Factories, Bengal.

Vital Statistics for the month of July 1934 of the

Districts.	No.	Towns.	Population under registration according to census of 1931.			Births registered.		Deaths							
			Male.	Female.	Total.	Number registered (excluding stillbirths).	Stillborn number registered.	Cholera.	Small-pox.	Plague.	Malaria.	Enteric fever.	Measles.	Relapsing fever.	Kala-azar.
Burdwan ..	1	Burdwan	23,485	16,133	39,618	23	..	5	..	..	6	1	..	..	1
	2	Raniganj	9,162	7,211	16,373	26	..	2	1	..	..	..	..	..	..
	3	Asansol ..	18,710	12,576	31,286	55	..	13	..	..	1	..	..	..	..
Birbhum ..	4	Suri ..	6,089	4,819	10,908	9	1	1	..	..	..	..	..	..	..
Bankura ..	5	Bankura	17,280	14,423	31,703	38	..	4	..	..	..	..	..	..	..
	6	Vishnupur	9,767	9,929	19,696	31	..	17	..	..	4	..	..	..	..
	7	Sonamukhi	5,337	5,652	10,989	17	..	..	..	..	..	..	..	..	..
Midnapore ..	8	Midnapur	17,807	14,214	32,021	51	..	..	2	..	..	1	..	..	..
	9	Ghatal ..	6,422	5,978	12,400	17	..	1	..	..	..	..	..	..	..
Hooghly ..	10	Hooghly-Chinsura.	18,799	13,835	32,634	80	3	..	..	..	1	5	..	..	1
	11	Bansberia	9,797	4,424	14,221	14	5	..	..	..	3	..	..	..	..
	12	Serampur	23,985	15,071	39,056	41	1	3	..	..	..	2	..	..	..
	13	Rishra-Konnagar.	17,528	9,340	26,868	22	1	1	..	..	3	..	..	..	..
	14	Baidyabati	10,369	8,117	18,486	21	..	..	..	..	1	3	..	..	..
	15	Bhadreswar	14,938	8,054	22,992	31	..	..	..	..	3	..	..	..	..
	16	Champdani	17,497	7,868	25,365	31	..	..	..	..	1	1	..	..	..
Howrah ..	17	Howrah ..	145,120	79,753	224,873	453	5	61	..	..	4	29	4	..	1
	18	Bally ..	20,944	9,403	30,347	30	..	1	..	..	..	..	..	..	..
24-Parganas ..	19	South Suburban.	22,183	17,316	39,499	62	..	7	2	..	2	1	..	..	1
	20	Tollyganj	14,800	9,676	24,476	28	..	2	..	..	..	..	..	..	..
	21	Budge-Budge.	15,514	8,669	24,183	20	..	13	..	..	1	1	..	..	..
	22	Baranagar	23,116	13,934	37,050	51	..	3	3	..	..	..	..	..	..
	23	Kamarhati	20,107	10,247	30,354	32	..	..	..	..	..	..	..	..	..
	24	Rajpur ..	5,788	5,645	11,433	25	..	1	..	..	1	1	..	..	..
	25	South Dum-Dum.	11,983	6,488	18,471	34	1	..	..	..	1	..	..	..	..
	26	Barrackpur	16,320	9,075	25,395	8	..	2	..	..	..	1	..	..	..
	27	Panihati	6,738	4,961	11,699	22	..	1	..	..	..	..	..	..	1
	28	North Barrackpur.	9,751	6,507	16,258	30	..	1	..	..	..	..	..	..	..
	29	Titagarh	34,252	15,332	49,584	47	1	4	..	..	..	..	..	..	..
	30	Garulia ..	9,282	4,751	14,033	10	..	..	..	..	3	..	..	..	..
	31	Naihati ..	20,123	10,785	30,908	17	1	..	..	..	..	..	..	..	..
	32	Halisahar	12,188	4,582	16,770	11	..	0	1	..	..	..	..	..	..
	33	Kanchrapara.	10,113	4,892	15,005	14	..	..	..	..	..	..	..	..	..
	34	Bhatpara	60,134	24,841	84,975	91	1	5	2	..	..	..	..	..	..
	35	Basirhat ..	11,106	10,181	21,287	35	..	..	..	..	1	..	1	..	..
	36	Baduria ..	7,169	6,508	13,677	10	..	..	..	..	..	..	..	..	..
Calcutta ..	37	Calcutta ..	814,948	381,786	1,196,734	1,997	182	101	19	..	43	68	4	..	21
Nadia ..	38	Krishnagar	12,807	11,477	24,284	23	..	..	..	..	..	..	..	..	..
	39	Nabadwip	8,912	9,949	18,861	20	3	..	..	..	..	1	..	..	..
	40	Ranaghat	6,834	5,061	11,895	9	..	..	..	..	2	..	..	..	..
	41	Santipur	12,016	12,976	24,992	41	..	7	..	..	..	..	..	..	1

towns with a population of 10,000 and over in Bengal.

registered.

Other fevers.	Dysentery.	Diarrhœa.	Influenza.	Pneumonia.	Phthisis.	Other respiratory diseases.	Injuries including suicide.	Deaths from child-birth.	Other causes.	Total of all causes.			Total of corresponding month of previous year.			No.	Towns.
										Male.	Female.	Total.	Male.	Female.	Total.		
..	6	4	..	3	..	4	3	..	11	26	18	44	20	10	30	1	Burdwan.
4	6	..	..	2	1	3	1	1	14	16	19	35	18	17	35	2	Raniganj.
15	6	..	..	8	1	1	3	1	33	52	30	82	18	13	31	3	Asansol.
2	..	..	..	..	..	1	..	..	..	3	1	4	7	1	8	4	Suri.
13	2	2	..	3	..	..	2	1	12	17	22	39	16	8	24	5	Bankura.
6	3	8	..	3	..	..	..	..	13	27	27	54	8	12	20	6	Vishnupur.
..	1	1	..	2	..	..	..	..	3	3	4	7	6	6	12	7	Sonamukhi.
9	3	1	..	1	5	..	1	1	13	18	19	37	18	11	29	8	Midnapur.
6	1	2	..	2	..	2	..	..	2	11	5	16	10	12	22	9	Ghatal.
6	5	8	..	5	4	..	1	..	20	30	26	56	32	29	61	10	Hooghly-Chinsura.
..	..	2	..	3	..	..	..	1	1	5	5	10	6	6	12	11	Bansberia.
5	4	8	..	3	5	3	2	..	5	24	16	40	19	18	37	12	Serampur.
1	..	..	..	2	1	..	..	..	5	5	8	13	9	7	16	13	Rishra-Konnagar.
..	..	2	..	1	..	1	..	1	12	10	11	21	15	12	27	14	Baidyabati.
5	..	..	..	..	..	..	..	..	7	7	8	15	12	5	17	15	Bhadreswar
3	..	1	..	1	..	1	..	..	10	7	11	18	13	4	17	16	Champdani.
14	45	64	..	67	26	67	4	2	203	323	268	591	247	190	437	17	Howrah.
9	3	2	1	2	..	1	..	..	8	12	15	27	5	10	15	18	Bally.
15	6	3	..	4	2	3	2	..	1	27	22	49	19	18	37	19	South Suburban.
..	1	1	..	1	1	1	..	..	5	6	6	12	6	7	13	20	Tollyganj.
6	11	3	..	..	3	..	2	..	6	21	25	46	16	12	28	21	Budge-Budge.
5	25	3	..	1	3	7	1	1	16	36	32	68	32	31	63	22	Baranagar.
7	4	3	..	3	1	6	..	1	5	17	13	30	23	9	32	23	Kamarhati.
3	2	1	..	2	..	..	..	..	..	5	6	11	1	11	12	24	Rajpur.
5	4	1	..	2	1	2	1	..	12	13	16	29	9	6	15	25	South Dum-Dum.
..	..	..	..	1	1	..	..	..	4	5	4	9	4	4	8	26	Barrackpur.
..	..	..	..	..	..	..	..	..	8	7	3	10	3	3	6	27	Panihati.
3	..	..	..	1	..	1	1	..	2	6	3	9	5	10	15	28	North Barrackpur.
60	1	2	..	2	1	..	1	1	3	29	46	75	19	23	42	29	Titagarh.
..	..	..	..	1	..	1	..	..	1	2	4	6	1	4	5	30	Garulia.
	2	3	1	1	..	1	1	1	4	13	7	20	8	9	17	31	Naihati.
..	1	..	1	2	1	..	..	..	2	14	3	17	..	1	1	32	Halisahar.
6	..	2	..	1	2	..	..	..	1	4	8	12	9	4	13	33	Kanchrapara.
35	1	5	..	9	3	..	2	1	18	41	35	76	43	37	80	34	Bhatpara.
1	2	1	..	1	..	..	..	..	5	6	6	12	13	7	20	35	Basirhat.
3	1	..	..	..	1	..	2	..	3	2	8	10	8	9	17	36	Baduria.
153	141	110	62	171	234	348	58	7	1,016	1,447	1,104	2,551	1,414	982	2,396	37	Calcutta.
6	..	..	..	3	..	1	..	..	5	8	7	15	6	3	9	38	Krishnagar.
24	5	1	..	2	1	2	..	..	9	25	20	45	15	20	35	39	Nabadwip.
..	..	..	..	..	..	..	..	..	1	1	2	3	3	5	8	40	Ranaghat.
6	..	1	..	2	2	..	2	1	14	14	22	36	20	13	33	41	Santipur.

Vital Statistics for the month of July 1934 of the

Districts.	No.	Towns.	Population under registration according to census of 1931.			Births registered.		Deaths							
			Male.	Female.	Total.	Number registered (excluding still births).	Still-born number registered.	Cholera.	Small-pox.	Plague.	Malaria.	Enteric fever.	Measles.	Relapsing fever.	Kala-azar.
Murshidabad	42	Berhampur	15,166	12,237	27,403	53	2	..	..	..	..	1	..	..	2
	43	Jiaganj-Azimganj.	5,774	5,224	10,998	13	1	..	..	..	..	6	..	..	..
	44	Kandi ..	6,403	6,213	12,616	12	..	..	..	..	..	..	..	..	..
	45	Jangipur	6,283	6,513	12,796	25	..	..	..	..	..	..	..	..	..
Jessore ..	46	Jessore ..	7,084	4,272	11,356	9	..	..	..	..	2	1	..	..	..
Khulna ..	47	Khulna ..	11,968	7,152	19,120	11	..	1	..	..	2	2	..	..	..
	48	Satkhira ..	6,071	5,170	11,241	8	..	1	..	..	..	..	..	..	..
Rajshahi ..	49	Rajshahi	15,178	11,886	27,064	52	1	..	..	..	..	..	..	..	..
Dinajpur ..	50	Dinajpur	11,763	7,393	19,156	2	..	..	..	..	..	..	..	..	..
Jalpaiguri ..	51	Jalpaiguri	11,995	6,967	18,962	20	..	..	..	..	3	1	..	..	..
Darjeeling..	52	Darjeeling	12,101	9,084	21,185	91	4	..	..	..	..	3	1	..	..
Rangpur ..	53	Rangpur	12,808	7,941	20,749	17		..	..	..	..	..	..	1	..
Bogra ..	54	Bogra ..	8,678	6,141	14,819	16	..	..	..	..	1	..	..	..	1
Pabna ..	55	Pabna ..	11,970	9,934	21,904	22	3	..	..	..	1	..	..	..	1
	56	Sirajganj	17,981	14,486	32,467	33	..	1	..	..	6	..	..	..	..
Malda ..	57	English Bazar.	9,387	7,520	16,907	17	..	..	..	..	1	..	..	..	1
	58	Nawabganj	7,497	8,329	15,826	42	..	..	..	..	2	..	..	..	1
Dacca ..	59	Dacca ..	79,365	59,153	138,518	237	..	2	..	..	2	7	..	..	9
	60	Narayanganj	21,526	12,663	34,189	59	2	..	1	..	..	1	..	..	..
Mymensingh	61	Mymensingh	19,733	10,747	30,480	40	3	..	..	..	..	..	..	..	..
	62	Netrakona	6,848	4,132	10,980	9	2	..	2	..	..	1	..	..	..
	63	Jamalpur	12,629	10,448	23,077	21		..	1	..	1	..	..	..	1
	64	Sherpur ..	10,545	9,002	19,547	25	1	..	..	..	1	2	..	..	1
	65	Kishorganj	8,624	6,813	15,437	23	..	1	..	..	..	..	..	..	..
	66	Bajitpur ..	5,632	6,018	11,650	9	..	..	..	..	5	..	..	..	..
	67	Tangail ..	8,739	7,343	16,082	12	..	..	..	..	..	..	..	..	..
Faridpur ..	68	Faridpur	9,427	6,089	15,516	10	..	..	..	..	4	..	..	..	..
	69	Madaripur	15,204	11,690	26,894	15	..	..	..	..	..	..	..	..	..
Bakarganj ..	70	Barisal ..	23,588	12,128	35,716	33	..	4	..	..	1	..	..	..	..
	71	Pirojpur ..	6,062	4,897	10,959	20	..	..	..	..	..	..	..	.	..
Chittagong	72	Chittagong	35,049	18,107	53,156	78	3	3	..	..	..	2	2	..	1
Noakhali ..	73	Noakhali	7,808	5,255	13,063	9	1	..	..	..	..	..	..	..	..
Tippera ..	74	Comilla ..	18,530	12,835	31,365	23	2	..	..	..	..	..	..	..	..
	75	Brahmanbaria.	13,973	12,689	26,662	57	..	..	1	..	..	..	..	..	..
	76	Chandpur	11,443	5,395	16,838	9	..	..	..	..	..	..	..	..	..
		Total of month.	2,051,552	1,194,305	3,245,857	4,771	230	278	35	..	113	142	12	1	45
		Total of corresponding month of previous year ..	..	..	..	4,713	184	37	75	..	179	171	17	2	56
		Increase + or decrease—	..	..	..	+58	+46	+241	−40	..	−66	−29	−5	−1	−11

Remarks.—1. The above table is compiled from returns collected by the municipalities and submitted to the Director of Public Health by the approximate to the actual in a proportion of cases and in a few instances are obviously incomplete.

2. The vital statistics of municipalities with a population of less than 10 000 have been excluded from this statement and 1918.

3. The birth and death ratios per mille per annum have been omitted from this statement according to Government of India,

Calcutta, the 25th January 1935.

towns with a population of 10,000 and over in Bengal.

registered.

Other fevers.	Dysentery.	Diarrhœa.	Influenza.	Pneumonia.	Phthisis.	Other respiratory diseases.	Injuries including suicide.	Deaths from child-birth.	Other causes.	Total of all causes.			Total of corresponding month of previous year.			No.	Towns.
										Male.	Female.	Total.	Male.	Female.	Total.		
12	5	2	..	..	1	1	2	..	6	17	15	32	26	18	44	42	Berhampur.
1	..	..	..	..	..	..	..	..	3	8	2	10	11	11	22	43	Jiaganj-Azimganj.
9	..	..	..	..	..	..	1	..	2	6	6	12	2	3	5	44	Kandi.
6	..	..	..	..	..	..	1	..	..	5	2	7	4	4	8	45	Jangipur.
4	..	..	..	1	..	..	..	..	1	8	1	9	4	3	7	46	Jessore.
1	1	..	..	2	..	..	3	..	4	11	5	16	14	15	29	47	Khulna.
5	..	..	..	1	..	..	5	..	2	9	5	14	4	6	10	48	Satkhira.
8	..	1	..	2	..	3	1	1	10	13	13	26	20	16	36	49	Rajshahi.
1	..	..	..	..	..	..	..	..	..	1	..	1	13	7	20	50	Dinajpur.
..	1	..	..	..	..	3	..	..	2	6	4	10	10	5	15	51	Jalpaiguri.
21	5	6	..	8	9	..	..	..	13	40	26	66	24	26	50	52	Darjeeling.
7	..	..	..	..	1	..	..	..	5	8	6	14	14	2	16	53	Rangpur.
5	..	..	..	..	..	..	..	..	1	4	4	8	11	7	18	54	Bogra.
..	..	..	..	..	..	..	..	..	5	1	6	7	2	5	7	55	Pabna.
7	..	1	..	1	..	1	3	1	7	12	16	28	12	5	17	56	Sirajganj.
2	..	..	..	..	..	1	..	..	4	6	3	9	7	5	12	57	English Bazar.
8	2	..	..	..	..	..	..	..	8	13	8	21	9	7	16	58	Nawabganj.
6	8	6	..	38	6	32	17	..	82	124	91	215	131	113	244	59	Dacca.
13	3	1	..	1	1	..	1	2	28	21	31	52	30	27	57	60	Narayanganj.
16	1	..	..	..	..	..	1	1	10	17	12	29	15	27	42	61	Mymensingh.
1	..	..	..	..	..	2	4	..	1	10	1	11	7	7	14	62	Netrakona.
5	2	..	..	1	..	..	1	..	4	8	8	16	9	19	28	63	Jamalpur.
8	4	1	..	3	2	..	..	..	9	25	6	31	20	22	42	64	Sherpur.
7	1	..	..	..	..	..	1	..	5	9	6	15	8	4	12	65	Kishorganj.
..	..	..	..	..	..	..	..	..	4	5	4	9	3	..	3	66	Bajitpur.
3	..	..	..	..	1	..	..	..	3	4	3	7	12	6	18	67	Tangail.
3	..	..	..	2	..	..	..	..	1	4	6	10	2	7	9	68	Faridpur.
6	5	..	..	1	..	..	2	..	7	12	9	21	5	7	12	69	Madaripur.
7	7	..	..	4	..	..	..	..	12	22	13	35	30	17	56	70	Barisal.
	2	..	..	..	..	..	1	..	1	5	4	9	2	8	10	71	Pirojpur.
8	3	..	2	5	..	1	2	..	16	30	25	55	28	28	56	72	Chittagong.
7	..	1	..	..	..	..	..	..	1	5	4	9	5	3	8	73	Noakhali.
5	4	..	..	1	1	..	..	..	11	16	6	22	9	8	17	74	Comilla.
14	1	..	..	..	..	..	..	..	8	12	12	24	16	12	28	75	Brahmanbaria.
1	1	..	..	1	..	1	..	..	..	3	1	4	5	2	7	76	Chandpur.
664	348	264	67	390	322	502	131	26	1,784	2,845	2,279	5,124	..	..	..		
600	307	205	80	414	285	500	172	19	1,631	2,695	2,061	4,756	..	..	..		
+58	+41	+59	−13	−24	+37	+2	−41	+7	+153	+150	+218	+368	..	..	..		

District Health Officers. Taken as a whole, the statement possesses a relative value, although the figures for individual town probably only incorporated in the returns for districts as ordered in Government of Bengal, Municipal Department letter No. 118 San., dated [the 8th February Education Department letter No. 93, dated the 26th March 1918.

R. B. KHAMBATA, M.R.C.S. (ENG.), L.R.C.P. (LOND.), D.P.H. (CAMB.), *Director of Public Health, Bengal.*

Vital Statistics for the month of July 1934 of the districts

Division.	No.	Districts.	Population under registration according to census of 1931.			Births registered.		Deaths							
			Male.	Female.	Total.	Number registered (excluding still-births).	Still-born number registered.	Cholera.	Small-pox.	Plague.	Malaria.	Enteric fever.	Measles.	Relapsing fever.	Kala-azar.
Burdwan	1	Burdwan	763,534	724,888	1,488,422	2,589	29	66	28	..	651	11	6	..	6
	2	Birbhum	466,598	470,048	936,646	1,900	51	89	8	..	642	27	13	5	1
	3	Bankura	524,690	524,643	1,049,333	2,405	9	38	1	..	475	11	9	6	3
	4	Midnapore	1,392,796	1,361,876	2,754,672	5,085	94	380	26	..	955	16	11	..	2
	5	Hooghly	479,217	455,416	934,633	1,577	6	103	37	..	513	68	4	10	6
	6	Howrah ..	433,011	410,636	843,647	1,219	5	137	27	..	91	16	2	..	4
Presidency	7	24-Parganas	1,154,286	1,074,531	2,228,817	4,354	36	416	12	..	228	4	2	..	22
	8	Nadia ..	720,894	678,608	1,399,502	2,518	60	3	3	..	1,220	4	1	1	18
	9	Murshidabad.	649,857	657,007	1,306,864	2,564	97	5	..	..	1,058	11	5	2	23
	10	Jessore	864,362	795,446	1,659,808	2,517	50	5	3	..	1,324	9	3	1	22
	11	Khulna ..	833,612	762,175	1,595,787	2,829	108	92	1	..	659	72	..	..	75
Rajshahi	12	Rajshahi	726,117	675,837	1,401,954	2,256	57	3	7	..	1,551	2	10	..	12
	13	Dinajpur	912,329	823,947	1,736,276	2,944	27	18	28	..	1,392	32	6	5	142
	14	Jalpaiguri	521,824	442,571	964,395	2,250	126	2	1	..	643	22	9	10	3
	15	Darjeeling	158,030	140,420	298,450	872	57	..	..	..	192	..	1	1	7
	16	Rangpur	1,343,786	1,230,250	2,574,036	3,583	261	9	90	..	2,764	59	15	7	80
	17	Bogra ..	548,496	523,104	1,071,600	1,505	46	2	26	..	1,520	77	28	81	22
	18	Pabna .	709,076	682,207	1,391,283	2,115	112	9	59	..	984	9	..	..	17
	19	Malda ..	510,421	510,612	1,021,033	1,024	16	12	1	..	774	..	1	3	12
Dacca ..	20	Dacca ..	1,642,626	1,617,244	3,259,870	4,126	83	27	37	..	1,157	50	30	..	83
	21	Mymensingh	2,594,444	2,408,565	5,003,009	7,666	367	12	41	..	2,368	11	21	6	55
	22	Faridpur	1,181,717	1 138,088	2,319,805	3,127	115	19	3	..	1,230	6	5	..	33
	23	Bakarganj	1,475,688	1,416,687	2,892,375	4,144	39	274	..	..	341	50	8	7	110
Chittagong	24	Chittagong	837,839	906,043	1,743,882	3,696	202	161	1	..	522	63	6	32	54
	25	Noakhali	851,010	842,646	1,693,656	2,823	151	108	6	..	374	19	10	8	82
	26	Tippera ..	1,551,694	1,483,176	3,034,870	3,964	255	77	11	..	818	18	5	2	121
	27	Chittagong Hill Tracts.													Not
		Total of month for Bengal.	23,875,876	22,779,347	46,655,223	75,742	2,459	2,076	457	..	24,455	667	220	187	1,015
		Total of corresponding month of previous year.	..	..	..	85,893	2,431	621	1,006	..	30,503	707	335	289	831
		Increase+ or decrease−.	..	..	..	−10,151	+28	+1,455	−549	..	−6,048	−40	−115	−102	+184

Remarks.—1. The above table is compiled from returns collected by the Subdivisional Officers and submitted to the Director of
individual district probably only approximate to the actual.
2. The vital statistics of municipalities with a population of less than 10,000 have been included in this statement with
3. Divisional totals and the birth and death ratios per mille per annum have been omitted from this statement according to

Calcutta, the 25th January 1935.

excluding towns with a population of 10,000 and over in Bengal.

registered.

Other fevers.	Dysentery.	Diarrhœa.	Influenza.	Pneumonia.	Phthisis.	Other respiratory diseases.	Injuries including suicide.	Deaths from child-birth.	Other causes.	Total of all causes.			Total of corresponding month of previous year.			No.	Districts.
										Male.	Female.	Total.	Male.	Female.	Total.		
730	67	60	11	107	40	50	67	10	447	1,248	1,109	2,357	1,208	1,221	2,489	1	Burdwan.
866	29	21	8	22	20	90	52	16	176	1,038	1,056	2,094	977	970	1,947	2	Birbhum.
677	56	177	8	66	52	59	60	19	499	1,141	1,075	2,216	1,111	969	2,080	3	Bankura.
1,592	158	186	8	144	60	73	138	18	716	2,322	2,170	4,492	1,939	1,893	3,832	4	Midnapore.
215	24	83	5	106	40	44	78	14	170	837	757	1,594	857	777	1,634	5	Hooghly.
226	22	146	..	36	25	40	40	4	199	542	482	1,024	508	499	1,007	6	Howrah.
1,542	59	76	1	101	72	47	138	14	575	1,742	1,567	3,309	1,355	1,196	2,551	7	24-Parganas
295	14	11	..	37	31	21	145	27	285	1,132	993	2,125	1,476	1,399	2,875	8	Nadia.
551	15	14	4	30	16	6	124	16	388	1,196	1,072	2,268	1,297	1,138	2,435	9	Murshidabad.
241	10	15	1	59	40	22	120	21	184	1,120	951	2,071	1,487	1,395	2,882	10	Jessore.
621	23	23	9	40	21	23	138	10	499	1,223	1,083	2,306	1,206	1,083	2,289	11	Khulna.
267	18	4	1	36	5	9	99	17	177	1,126	1,092	2,218	1,736	1,705	3,441	12	Rajshahi.
846	48	42	7	151	49	40	107	34	139	1,668	1,418	3,086	1,951	1,737	3,688	13	Dinajpur.
678	90	103	6	243	45	49	49	47	266	1,189	1,077	2,266	1,114	1,000	2,114	14	Jalpaiguri.
248	231	21	10	45	34	..	13	6	167	486	490	976	480	467	947	15	Darjeeling.
1,508	55	60	7	84	40	60	98	42	207	2,758	2,427	5,185	3,509	3,331	6,840	16	Rangpur.
286	44	55	64	62	9	71	114	13	66	1,243	1,297	2,540	1,136	1,239	2,375	17	Bogra.
594	10	10	1	40	19	14	95	14	170	1,107	928	2,035	1,167	1,183	2,350	18	Pabna.
97	..	2	..	4	6	2	51	5	81	539	512	1,051	792	689	1,481	19	Malda.
1,039	131	98	75	88	39	90	145	32	591	1,950	1,771	3,721	2,121	1,886	4,007	20	Dacca.
2,855	149	49	4	65	75	58	213	59	943	3,722	3,262	6,984	4,983	4,727	9,710	21	Mymensingh
970	112	34	4	111	25	40	103	15	409	1,679	1,440	3,119	2,052	1,925	3,977	22	Faridpur.
1,794	180	48	32	187	37	147	101	19	639	2,165	1,809	3,974	1,579	1,323	2,902	23	Bakarganj.
2,507	40	24	5	88	7	12	93	16	155	1,934	1,852	3,786	1,907	1,953	3,860	24	Chittagong.
1,549	167	48	18	67	15	56	127	25	390	1,523	1,546	3,069	1,571	1,496	3,067	25	Noakhali.
1,461	261	66	8	62	26	33	129	25	826	2,184	1,765	3,949	2,231	1,989	4,220	26	Tippera.
under registration																27	Chittagong Hill Tracts.
24,245	2,013	1,481	297	2,132	866	1,165	2,037	538	9,364	38,814	35,001	73,815	..	..	..		
26,880	1,823	1,285	304	1,943	947	1,234	2,526	613	9,153	41,810	39,190	81,000	..	..	..		
−2,635	+190	+196	−7	+189	−81	−69	+111	−75	+211	−2,996	−4,189	−7,185	..	..	..		

Public Health by the District Health Officers. Taken as a whole, the statement possesses a relative value, although the figures for those of the respective districts as ordered in Government of Bengal, Municipal Department, letter No. 118 San., dated the 8th February 1918. Government of India, Education Department, letter No. 93, dated the 26th March 1918.

R. B. KHAMBATA, M.R.C.S. (ENG.), L.R.C.P. (LOND.), D.P.H. (CAMB.), *Director of Public Health, Bengal.*

CALCUTTA IMPROVEMENT TRUST.

Calcutta, the 16th January 1935.

Notice under section 43 of Bengal Act V of 1911 (the Calcutta Improvement Act, 1911) as amended up to 1931.

Scheme No. XLV (Howrah Bridge Approach —Dalhousie Square North to Canning Street).

The Board of Trustees for the Improvement of Calcutta hereby give notice that a Street Scheme (for the construction of a main 100′ road and subsidiary roads), namely, Scheme No. XLV, has been framed for the area bounded as follows:—

On the North—From a point on the centre line of Canning Street where it meets the northward prolongation of the eastern edge of Clive Row, running eastwards along the centre line of Canning Street to a point opposite Ezra Street.

On the East—From this point in a straight line southwards along the western edge of Ezra Street to a point opposite Parsi Church Street. Thence eastwards across Ezra Street and along the southern edge of Parsi Church Street to a point where it meets the centre line of Lower Chitpore Road. Thence southwards along the centre line of Lower Chitpore Road to the centre point of the junction of Lower Chitpore Road and Lal Bazar Street.

On the South—From this point running westwards along the centre line of Lal Bazar Street to a point opposite Lyons Range.

On the West—From this point running northwards along the western and southern edges of Lyons Range to a point opposite Royal Exchange Place. Thence northwards along the western and the southern edges of Royal Exchange Place to its junction with the eastern edge of Clive Street. From this point across Royal Exchange Place straight northwards along the eastern edge of Clive Street, thence along the eastern edge of Clive Row to the starting point.

Particulars of the scheme, map of the area comprised in the scheme and a statement of land which it is proposed to acquire and on which a betterment fee is proposed to be levied may be inspected at the offices of the Trust at No. 5, Clive Street, on week days between the hours of 11 a.m. and 4 p.m. and on Saturdays between the hours of 11 a.m. and 2 p.m.

Copies of the above documents will be delivered to the applicants on payment of following fees:—

Particulars of the scheme—As. 4.

Map of the area comprised in the scheme—Re. 1.

Statement of land proposed to be acquired and also land on which a betterment fee is proposed to be levied—As. 4.

Objections to the scheme will be received up to 30th April 1935.

C. W. GURNER, *Chairman (offg.)*.

NOTICE.

5, Clive Street, Calcutta, the 23rd January 1935.

Notice is hereby given under section 47 (*3*) of the Calcutta Improvement Act, 1911, as amended up to 1931, that the Board of Trustees for the Improvement of Calcutta have applied to the Local Government for sanction to Improvement Scheme No. XLI (Chandni Chak Street Widening), which was first published in the *Calcutta Gazette* and in local newspapers on 8th March 1934.

C. W. GURNER, *Chairman (offg.)*.

CORPORATION OF CALCUTTA.

Central Municipal Office, the 1st February 1935.

Bye-election to elect a Councillor for the General Constituency—Tollygunge (Ward No. 27).

NOTICE.

In compliance with the provisions of clause 8 of section 29 of Bengal Act III of 1923, it is hereby notified that Dr. J. M. Das Gupta has been declared duly elected as a Councillor of the Corporation of Calcutta for the General Constituency—Tollygunge (Ward No. 27).

J. C. MUKERJEA,
Chief Executive Officer.

DISTRICT REPORTS ON WEATHER AND CROPS.

For the week ending on the 30th January 1935.

Summary.—The week was practically rainless. Preparation of lands for autumn crops continues in places. Threshing of winter paddy is much advanced. Prospects of standing crops are generally satisfactory. During the week ending Saturday, the 26th January 1935, 5,763 persons attended different relief centres and 853 persons received gratuitous relief in the distressed areas of Murshidabad. In Birbhum 6,068 men were employed on test relief works on Saturday, the 26th January 1935. Test relief works also continue at Dhawbundh and Chamtiabad bundh in Bankura. At the former centre the attendance was 1,375 during the week ending Saturday, the 26th January, and at the latter it was 4,735 during the period from the 15th to 26th January 1935. The average price of common rice for the province has risen by about 1·71 per cent. as compared with that of the previous week.

Serial No.	District and sub-division.	Rainfall.	Price of common rice, in seers, per rupee.		Character of the weather, condition of crops, etc.
			This week.	Previous week.	
1	2	3	4	5	6
		Inches.			
1	24-Parganas ..	Nil	10 11/16	10 11/16	Weather seasonable. No damage to crops is reported. Fodder and water are sufficient. Export and import normal. Cattle-disease exists in Amdanga police-station.
	Diamond Harbour	Nil	14½	14	
	Barrackpore ..	Nil	10½	10½	
	Baraset ..	Nil	10	10	
	Basirhat ..	Nil	11	12½	
2	Nadia ..	0·00	11½	11½	Weather seasonable. No export and import. Harvesting of sugarcane continues. Prospects of standing crops are fair. Fodder and water are sufficient. Cattle-disease is reported from places of Sadar subdivision.
	Kushtia ..	0·00	11½	11½	
	Meherpur ..	0·00	11	11	
	Chuadanga ..	0·00	11	11	
	Ranaghat ..	0·00	10	10	
3	Murshidabad ..	Nil	10	12	Weather seasonable. Prospects of standing crops are not good in Kandi subdivision. Fodder and water are sufficient except in Sadar subdivision. Cattle-disease is reported from Jangipur subdivision. Test relief works continue. 5,763 persons attended relief centres during the week ending Saturday, the 26th January 1935. Number of persons receiving gratuitous relief in the distressed areas was 184, 385 and 284 in Lalbagh, Kandi and Jangipur subdivisions, respectively.
	Lalbagh ..	Nil	11	12	
	Jangipur ..	Nil	12½	12½	
	Kandi ..	Nil	12	13	
4	Jessore ..	Nil	11	11	Weather seasonable. Prospects of standing crops are fair. No large export or import. Fodder and water are sufficient.
	Jhenidah ..	Nil	13	13	
	Magura ..	Nil	11½	12	
	Narail ..	Nil	13	13	
	Bongaon ..	Nil	10	10	
5	Khulna ..	Nil	12	12	Weather seasonable. Its effects on crops are fair. Fodder and water are sufficient.
	Satkhira* ..	Nil	13	13	
	Bagerhat ..	Nil	12½	12	

Serial No.	District and sub-division.	Rainfall.	Price of common rice, in seers, per rupee.		Character of the weather, condition of crops, etc.
			This week.	Previous week.	
1	2	3	4	5	6
		Inches.			
6	Burdwan ..	Nil	11	11	Weather cold. Condition of crop is not satisfactory. Fodder and water are sufficient.
	Asansol ..	Nil	10½	10½	
	Katwa ..	Nil	11	12	
	Kalna ..	Nil	10	10	
7	Birbhum ..	Nil	12½	13	Weather seasonable. Prospects of standing crops are fair. Cattle-disease is reported from Nalhati thana. 6,068 men were employed on test relief works on Saturday, the 26th January 1935.
	Rampurhat ..	Nil	11	11	
8	Bankura ..	0·00	11½	12	Weather seasonable. Threshing of winter paddy is nearing completion. Stock of rice, fodder and water are sufficient. No large export or import. Prospects of standing crops are fair. Cattle-disease is reported from Chhatna police-station. Test relief works continue at two centres of Raipur thana, viz., Dhawbundh and Chamtiabad bundh. 1,375 persons worked at Dhawbundh during the week ending Saturday, the 26th January, and 4,735 persons worked at Chamtiabad bundh during the period from 15th to 26th January 1935.
	Vishnupur ..	0·00	11½	11½	
9	Midnapore ..	Nil	12	13	Weather seasonable. Condition of *rabi* crop is good. Fodder and water are sufficient.
	Contai ..	Nil	14	14	
	Tamluk ..	Nil	11½	11	
	Ghatal ..	Nil	12½	11½	
	Jhargram ..	Nil	11	12	
10	Hooghly ..	Nil	10	11	Weather seasonable. Fodder and water are sufficient.
	Serampore ..	Nil	10	10	
	Arambagh ..	Nil	13	13	
11	Howrah ..	Nil	10	10	Weather seasonable; its effects are favourable. Fodder and water are sufficient.
	Uluberia ..	Nil	11½	11	
12	Rajshahi (Rampur Boalia).	Nil	12	12	Weather seasonable and favourable to the crops. Lands are being prepared for sowing sugarcane, jute and paddy. Fodder and water are sufficient.
	Naogaon ..	(*n*)	(*n*)	13	
	Nator ..	Nil	11½	11½	
13	Dinajpur ..	Nil	12	15	Weather seasonable. Its effects on agricultural operations are favourable. Fodder and water are sufficient.
	Thakurgaon ..	Nil	15	15	
	Balurghat ..	Nil	12	13 1/16	
14	Jalpaiguri ..	Nil	13	14	Sky cloudy. Fodder and water are sufficient.
	Alipur ..	Nil	13	14	

(*n*) Not reported.

Serial No.	District and subdivision.	Rainfall.	Price of common rice, in seers, per rupee.		Character of the weather, condition of crops, etc.
			This week.	Previous week.	
1	2	3	4	5	6
		Inches.			
15	Darjeeling ..	Nil	8	8	Weather favourable. Fodder and water are sufficient. Cattle-disease exists at places.
	Kurseong ..	Nil	10	10	
	Siliguri ..	Nil	13	13	
	Kalimpong ..	Nil	7½	7½	
16	Rangpur ..	Nil	11	13	Weather seasonable. Prospects of standing crops are fair. Harvesting of *rabi* crops continues. Fodder and water are sufficient.
	Nilphamari ..	Nil	12	(a)	
	Kurigram ..	Nil	13	12½	
	Gaibandha ..	Nil	12	12	
17	Bogra ..	Nil	14	14	The effect of weather on agricultural operation is fair. Condition of standing crops is fair. Fodder and water are sufficient.
18	Pabna ..	Nil	10½	10½	Weather seasonable. Condition of standing crops is satisfactory. Harvesting of mustard continues. Fodder and water are sufficient.
	Serajganj ..	Nil	10	10	
19	Malda ..	Nil	12	12½	Weather seasonable. Prospects of standing crops are fair. Harvesting of tobacco has commenced. Fodder and water are available.
20	Cooch-Behar ..	Nil	13 4/16	13 4/16	Weather seasonable. Harvesting of winter paddy is nearing completion. Preparation of lands for jute and autumn paddy is in progress. Prospects and condition of standing crops are fair. Fodder and water are sufficient.
21	Dacca ..	Nil	11	11	Rainfall at North Sadar (Kapasia) nil. Weather seasonable and its effects on agricultural operations are fair. Prospects of crops are fair. Fodder and water are available. Cattle-disease exists in Manikganj subdivision.
	Manikganj ..	Nil	11½	11½	
	Narayanganj ..	Nil	10½	11	
	Munshiganj ..	Nil	12½	12½	

(a) Not reported.

Serial No.	District and sub-division.	Rainfall.	Price of common rice, in seers, per rupee.		Character of the weather, condition of crops, etc.
			This week.	Previous week.	
1	2	3	4	5	6
		Inches.			
22	Mymensingh ..	Nil	10½	10½	Weather seasonable. Condition of crops is good. Fodder and water are available.
	Jamalpur ..	Nil	12½	12½	
	Tangail ..	Nil	10½	10½	
	Netrakona ..	Nil	12	12	
	Kishoreganj ..	Nil	11	11	
23	Faridpur ..	0·00	13	13	Weather seasonable. Condition of standing crops is fair. Fodder and water are sufficient.
	Goalundo (Rajbari).	0·00	10	10	
	Madaripur ..	0·00	13	13	
	Gopalganj (*a*) ..	0·00	14	14	
24	Bakarganj (Barisal).	Nil	13	13	Weather seasonable. Prospects of standing crops are good. Fodder and water are sufficient.
	Pirojpur ..	Nil	11½	10½	
	Patuakhali ..	(*n*)	(*n*)	12	
	Dakshin Shahbazpur (Bhola).	Nil	11	13	
25	Chittagong ..	Nil	12 13*	12 13*	Weather seasonable. Transplantation of *rabi* crops is completed and its condition is fair. Fodder and water are sufficient. Panga salt sells at 13 seers per rupee at Sadar and 12 seers per rupee at Cox's Bazar.
	Cox's Bazar ..	Nil	13	13	
26	Tippera (Comilla)	Nil	13	13	Prospects of crops are generally fair. Cattle-disease is reported from Matlab, Kasba and Nasirnagor police-stations.
	Brahmanbaria ..	Nil	11	11	
	Chandpur ..	Nil	13 1/16	13 1/16	
27	Noakhali ..	Nil	14	14	Weather seasonable. Condition of standing crops is fair. Fodder and water are sufficient.
	Feni ..	Nil	14	14	
28	Chittagong Hill Tracts.	Nil	18	17	Weather seasonable. Its effects on agricultural operations are favourable. Fodder and water are sufficient.
29	Tripura State ..	Nil	12½	12½	Weather seasonable. Condition of cattle is good. Fodder and water are sufficient. Harvesting of *rabi* crops, *til* and cotton, clearing of jungles for *joom* and preparation of lands are going on. Cotton sells at Rs. 8 to Rs. 15 and jute at Rs. 2-8 to Rs. 3-12 per maund.

(*n*) Not reported.

(*a*) The rainfall at Haridaspur, which is very near to Gopalganj, is shown here.

* Burma rice.

J. C. BASU, for *Director of Agriculture, Bengal.*

Dacca, the 4th February 1935.

IRRIGATION DEPARTMENT, BENGAL.

Abstract statement showing the approximate volume of traffic and the tollage on canals in Bengal classed as Major Works and Minor Works and Navigation for the month of December 1934 as compared with the corresponding month of the previous year :—

Canals.	1934-35.					
	Weight of cargo.		Rafts.		Tollage.	
	During the month.	To end of the month.	During the month.	To end of the month.	During the month.	To end of the month.
	Tons.	Tons.	No.	No.	Rs.	Rs.
Major Works.						
Midnapore Canal	631	11,330	1,200	11,750	967	12,321
Hijili Tidal Canal	221	16,165	100	550	483	30,868
Total ..	852	27,495	1,300	12,300	1,450	43,189
Minor Works and Navigation.						
Calcutta and Eastern Canals ..	46,884	244,509	13,525	62,211	30,791	1,70,206
Tolly's Nala	14,312	152,966	33,510	2,99,880	4,578	49,794
Madaripur Bil Route	3,386	700,362	1,580	7,300	3,471	1,73,686
Total ..	64,582	1,097,837	48,615	3,69,391	38,840	3,93,686
Magrahat Channels	14,780	39,209	800	9,160	3,186	13,373
Orissa Coast Canal	1,127	24,916	....	4,025	1,020	15,746
GRAND TOTAL ..	80,489	1,161,962	49,415	3,82,576	43,046	7,22,805

Canals.	1933-34.					
	Weight of cargo.		Rafts.		Tollage.	
	During the month.	To end of the month.	During the month.	To end of the month.	During the month.	To end of the month.
	Tons.	Tons.	No.	No.	Rs.	Rs.
Major Works.						
Midnapore Canal	1,134	10,464	3,800	12,525	1,330	11,069
Hijili Tidal Canal	254	21,876	....	1,050	689	37,936
Total ..	1,388	32,340	3,800	13,575	2,019	49,005
Minor Works and Navigation.						
Calcutta and Eastern Canals .	48,593	255,623	15,187	79,904	31,849	1,78,163
Tolly's Nala	17,351	174,970	35,378	291,042	5,541	55,734
Madaripur Bil Route	2,999	557,574	7,050	17,985	3,924	1,49,131
Total ..	68,943	988,167	57,615	388,931	41,314	3,83,028
Magrahat Channels	3,856	25,372	300	7,298	2,933	15,832
Orissa Coast Canal	1,068	21,392	....	6,400	1,138	20,816
GRAND TOTAL ..	73,867	1,034,931	57,915	402,629	45,385	4,19,676

Canal.	December 1934.			
	Tollage, 1934-35.		Tollage, 1933-34.	
	During the month.	To end of the month.	During the month.	To end of the month.
	Rs.	Rs.	Rs.	Rs.
Sundarbans Steamer Route ..	4,896	48,422	4,450	45,774

T. A. CURRY,
Chief Engineer to the Government of Bengal.

Calcutta, the 30th January 1935.

IRRIGATION DEPARTMENT, BENGAL.

Irrigation operations for the official year 1934-35.

Area leased for irrigation up to end of December 1934

Circle.	District.	Canal.	Estimated full discharge.	Average discharge in month.	Discharge utilised.	Approximate area of land irrigated during the year up to the end of the month.	Approximate area of land under irrigation up to the same date last year.	Details of areas leased.							Rainfall, 1934-35.		Rainfall, 1933-34.	
								Long-term leases.	Season leases.					Grand Total.	During month.	Up to end of month.	During month.	Up to end of month.
									Kharif.	Rabi.	Sugarcane.	Single watering.	Total.					
			Cusecs	Cusecs	Cusecs	Acres.	Acres.	Acres.	Acres.	Acres.	Acres.	Acres.	Acres.	Acres.	Inches.	Inches.	Inches.	Inches.
South-Western.	Midnapore ..	Midnapore	1,411	50	..	10,224	19,206	9,683	541	..	..	..	541	10,224	0·10	39·77	0·02	67·47
		Panskura	522	1	..	563	240	193	370	..	..	..	370	563	0·20	53·21	0·00	70·59
	Howrah ..	Tidal Reaches, Ranges I and II	..	..	..	..	..	..	..	..	..	..	..	..	0·38	71·93	0·00	94·48
		Total Midnapore Canal ..	..	..	..	10,787	19,446	9,876	911	..	..	..	911	10,787	..	..	..	..
		Total of the corresponding period last year ..	..	..	..	..	..	19,480	..	..	..	..	..	19,480	..	..	..	..
	Burdwan and Hooghly.	Damodar Canal proper ..	2,000	126	..	84,980	3,818	10,242	79,140*	..	..	40	79,180	89,422	2·79	48·27	..	71·57
		Eden Canal proper ..	..	..	107	18,360	13,855	9,800	8,357‡	281	1	..	8,639	18,439	1·80	51·98	..	73·44
		Total Damodar Canal ..	..	126	107	103,340	17,673	20,042	87,497	281	1	40	87,819	107,861	..	..	..	..
		Total of the corresponding period last year ..	..	..	..	..	..	..	..	..	..	..	..	..	..	..	..	..
	Birbhum ..	Bakreswar Canal ..	129	..	..	7,761	7,231	7,344	397†	18	..	..	415	7,759	·08	46·89	..	70·99
		Total of the corresponding period last year ..	..	..	..	..	..	5,852	1,373	7	..	..	1,380	7,232	..	..	..	..
		GRAND TOTAL ..	..	..	..	121,888	44,350	37,262	88,805	299	1	40	89,145	126,407	..	..	..	..
		GRAND TOTAL OF THE CORRESPONDING PERIOD LAST YEAR ..	..	..	..	..	..	..	..	..	..	..	..	..	..	..	..	..

*79,139 for covering lease and 1 for hot weather. ‡Including 5,831 for covering lease and 64 for hot weather. †366 for covering lease and 31 for unauthorised irrigation.

T. A. CURRY,

Chief Engineer to the Government of Bengal.

Calcutta, the 29th January 1935.

Vital statistics of towns with a population of 50,000 and over of the Bengal Presidency for the week ending Saturday, the 19th January 1935.

Districts.	Nos.	Towns.	Population under registration according to Census of 1931.			Births registered.		Deaths registered.																								
			Male.	Female.	Total.	Number registered (excluding births).	Still-births registered.	Cholera.	Small-pox.	Plague.	Cerebro spinal meningitis.	Malaria.	Enteric fever.	Measles.	Relapsing fever.	Kala-azar.	Influenza.	Other fevers.	Dysentery.	Diarrhœa.	Pneumonia.	Phthisis.	Other respiratory diseases.	Injuries including suicide.	Deaths from child-birth.	Other causes.	Total of all causes.			Total of corresponding week of the previous year.		
																											Male.	Female.	Total.	Male.	Female.	Total.
Calcutta ..	1	Calcutta ..	814,948	381,786	1,196,734	508	39	11	11	..	11	7	3	3	..	5	7	18	17	3	42	46	95	10	..	463	394	358	752	418	339	757
Burdwan ..	2	Asansol Mining Settlement.	209,544	173,136	382,680	167	2	..	..	..	..	1	..	..	..	..	..	42	4	1	11	1	7	..	2	52	54	67	121	17	19	36
Howrah ..	3	Howrah ..	145,120	79,753	224,873	132	8	3	1	..	..	4	3	..	..	..	..	6	12	7	14	5	20	1	1	62	83	56	139	71	65	136
Dacca ..	4	Dacca ..	79,365	59,153	138,518	113	2	..	..	..	..	..	2	..	..	1	..	2	2	..	5	1	13	..	1	20	20	27	47	28	28	56
24-Parganas ..	5	Bhatpara ..	60,124	24,841	84,975	33	..	..	1	..	..	1	..	..	..	..	..	7	..	..	4	1	..	..	..	9	12	11	23	1	3	4
Chittagong ..	6	Chittagong	35,049	18,107	53,156	29	1	..	..	..	..	..	..	..	..	..	..	2	1	..	..	..	..	..	..	8	6	5	11	12	5	17

Calcutta, the 30th January 1935.

R. B. KHAMBATA, M.R.C.S. (ENG.), L.R.C.P. (LOND.), D.P.H. (CAMB.), *Director of Public Health, Bengal.*

Vital statistics of towns with a population of 50,000 and over of the Bengal Presidency for the week ending Saturday, the 26th January 1935.

Districts.	Nos.	Towns.	Population under registration according to census of 1931.			Births registered.		Deaths registered.																								
			Male.	Female.	Total.	Number registered (excluding still-births).	Still-births registered.	Cholera.	Small-pox.	Plague.	Cerebro spinal meningitis.	Malaria.	Enteric fever.	Measles.	Relapsing fever.	Kala-azar.	Influenza.	Other fevers.	Dysentery.	Diarrhœa.	Pneumonia.	Phthisis.	Other respiratory diseases.	Injuries including suicide.	Deaths from child-birth.	Other causes.	Total of all causes.			Total of corresponding week of the previous year.		
																											Male.	Female.	Total	Male.	Female.	Total.
Calcutta ..	1	Calcutta ..	814,948	381,786	1,196,734	377	47	18	19	..	27	20	10	2	..	3	19	37	28	11	94	83	90	23	1	298	431	352	783	481	332	813
Burdwan ..	2	Asansol Mining Settlement.	209,544	173,136	382,680	287	4	..	..	..	..	..	1	..	..	..	..	94	12	1	11	3	5	6	1	63	118	79	197	106	110	216
Howrah ..	3	Howrah ..	145,120	79,753	224,873	119	12	5	..	..	..	5	2	..	..	..	..	10	13	12	22	2	17	..	..	62	80	70	150	88	75	163
Dacca ..	4	Dacca ..	79,365	59,153	138,518	108	5	..	..	..	..	..	1	..	..	3	..	..	2	..	14	..	11	..	2	26	36	23	59	30	28	58
24-Parganas	5	Bhatpara ..	60,134	24,841	84,975	33	2	..	1	..	..	..	1	..	..	..	..	5	1	1	5	..	..	..	..	3	9	8	17	7	4	11
Chittagong ..	6	Chittagong	35,049	18,107	53,156	23	2	..	..	..	..	..	..	..	..	..	..	5	..	..	..	..	..	..	2	7	8	6	14	15	8	23

Calcutta, the 1st February 1935.

R. B. KHAMBATA, M.R.C.S. (ENG.), L.R.C.P. (LOND.), D.P.H. (CAMB.), *Director of Public Health, Bengal.*

Statement of weekly gauge readings on the River Ganges at Rampur Boalia for the week ending the 26th January 1935.

Date.	Hour.	Height of surface above P. W. D. datum.	Height of surface above P. W. D. datum on the same date last year.	Remarks.
1935.				Zero of gauge referred to B. M. on Rajshahi College step ; value 64·73.
20th January	7 a.m.	39·04	38·63	
21st „	7 „	39·04	38·53	
22nd „	7 „	38·99	38·43	
23rd „	7 „	38·94	38·33	Value of 0 of the gauge =36·84 P. W. D.
24th „	7 „	38·89	38·23	
25th „	7 „	38·84	38·23	
26th „	7 „	38·84	38·23	

Highest recorded level on 26-8-1879=64·24.
Lowest recorded level on 24-4-1931=32·05.

J. MACKIE, *Subdivisional Officer,*
Irrigation Department, Rajshahi.

Rampur Boalia, the 26th January 1935.

IRRIGATION DEPARTMENT,

Statement showing heights above P. W. D. datum and low water in the rivers Ganges, Bhagirathi, Jalangi and Brahmaputra for the

River Ganges.

Date.	Mirzapur. Zero of gauge is 200·00 ft. above P. W. D. datum.		Benares. Zero of gauge is 197·05 ft. above datum.		Buxar.* Zero of gauge is 169·91 ft. above Bengal P. W. D. datum.		Dinapore. Zero of gauge is 135·51 ft. above P. W. D. datum.		Monghyr. Zero of gauge is at P. W. D. datum.		Rajmahal. Zero of gauge is at P. W. D. datum.	
	Distance in miles.	From Allahabad, 86.	From Allahabad, 134.	From Mirzapur, 48.	From Benares, 90.		From Benares, 177.	From Buxar, 87.	From Benares, 287.	From Dinapore, 110.	From Benares, 407.	From Monghyr, 120.
	Highest guage reading.	2nd September 1916. 265·97 ft.	2nd September 1916. 244·55 ft.		7th September 1919. 203·40 ft.		21st August 1923. 172·41 ft.		8th September 1901. 129·60 ft.		15th August 1913. 90·37 ft.	
	Lowest gauge reading.	11th April 1878. 198 92 ft.	20th May 1879. 191·70 ft.		15th May 1914. 161·65 ft.		26th April 1902. 136·11 ft.		2nd May 1914. 95·75 ft.		12th May 1916. 55·46 ft.	
		Height above zero of gauge.	Height above P. W. D. datum.	Height above zero of gauge.	Height above P. W. D. datum.	Height above zero of gauge.	Height above P. W. D. datum.	Height above zero of gauge.	Height above P. W. D. datum.	Height above zero of gauge.	Height above P. W. D. datum.	Height above zero of gauge.	Height above P. W. D. datum.
1	2	3	4	5	6	7	8	9	10	11	12	13	14
1st ..	..	43·00	243·00	30·00	227·05	26·58	196·49	27·40	162·91	123·40	123·40	82·50	82·50
2nd ..	..	41·33	241·33	28·50	225·55	25·50	195·41	26·50	162·01	122·60	122·60	82·40	82·40
3rd ..	..	40·67	240·67	27·50	224·55	24·83	194·74	25·50	161·01	122·00	122·00	81·90	81·90
4th ..	..	39·92	239·92	27·00	224·05	24·50	194·41	25·00	160·51	121·00	121·00	81·00	81·00
5th ..	..	37·00	237·00	25·50	222·55	24·00	193·91	24·60	160·11	120·50	120·50	80·00	80·00
6th ..	..	35·50	235·50	23·33	220·38	23·00	192·91	24·20	159·71	120·00	120·00	79·40	79·40
7th ..	..	33·33	233·33	21·00	218·05	22·17	192·08	23·10	158·61	119·10	119·10	78·90	78·90
8th ..	..	31·42	231·42	19·17	216·22	21·00	190·91	22·20	157·71	118·40	118·40	78·20	78·20
9th ..	..	30·25	230·25	17·00	214·05	19·50	189·41	21·20	156·71	117·60	117·60	77·40	77·40
10th ..	..	29·25	229·25	26·42	213·47	18·17	188·08	20·20	155·71	116·70	116·70	76·60	76·60
11th ..	..	28·42	228·42	15·25	212·30	17·42	187·33	19·50	155·01	115·70	115·70	76·00	76·00
12th ..	..	27·67	227·67	14·42	211·47	16·50	186·41	18·30	153·81	114·80	114·80	75·20	75·20
13th ..	..	27·00	227·00	14·00	211·05	16·00	185·91	17·80	153·31	114·00	114·00	74·60	74·60
14th ..	..	26·50	226·50	13·50	210·55	15·50	185·41	16·80	152·31	113·60	113·60	74·00	74·00
15th ..	..	26·00	226·00	13·00	210·05	14·92	184·66	16·60	152·11	112·90	112·90	73·50	73·50
16th ..	..	25·75	225·75	12·00	209·05	14·17	184·08	16·80	152·31	112·50	112·50	73·60	73·60
17th ..	..	25·42	225·42	12·00	209·05	13·92	183·83	16·60	152·11	112·20	112·20	73·40	73·40
18th ..	..	25·08	225·08	11·50	208·55	13·67	183·58	16·60	152·11	111·90	111·90	73·30	73·30
19th ..	..	24·75	224·75	11·25	208·30	13·42	183·33	16·60	152·11	111·40	111·40	73·30	73·30
20th ..	..	24·50	224·50	11·00	208·05	13·25	183·16	16·30	151·81	111·10	111·10	73·10	73·10
21st ..	..	24·00	224·00	10·50	207·55	13·00	182·91	15·60	151·11	110·90	110·90	72·80	72·80
22nd ..	..	23·75	223·75	10·17	207·22	12·75	182·66	15·30	150·81	110·60	110·60	72·40	72·40
23rd ..	..	23·50	223·50	9·83	206·88	12·42	182·33	15·00	150·51	110·20	110·20	72·10	72·10
24th ..	..	23·17	223·17	9·33	206·38	12·17	182·08	14·90	150·41	110·00	110·00	71·70	71·70
25th ..	..	22·92	222·92	9·33	206·38	11·83	181·74	14·90	150·41	109·60	109·60	71·30	71·30
26th ..	..	22·75	222·75	9·58	206·63	11·67	181·58	14·90	150·41	109·40	109·40	70·90	70·90
27th ..	..	22·58	222·58	8·83	205·88	11·50	181·41	14·00	150·41	109·10	109·10	70·40	70·40
28th ..	..	22·42	222·42	8·50	205·55	11·33	181·24	14·80	150·31	108·90	108·90	70·10	70·10
29th ..	..	22·17	222·17	8·33	205·38	11·25	181·16	14·80	150·31	108·50	108·50	69·70	69·70
30th ..	..	22·00	222·00	8·00	205·05	11·00	180·91	14·80	150·31	180·30	108·30	69·40	69·40
31st ..	..	21·67	221·67	7·83	204·88	10·83	180·74	14·80	150·31	108·30	108·30	69·10	69·10
Average level	..	28·18	228·18	15·28	212·33	16·38	186·29	18·60	154·11	114·04	114·04	74·78	74·78

Note.—Since the 1st January 1929 the datum of all gauges has been finally altered to refer to the Bengal Public Works Department datum which is 0·25 feet above levels recorded since each gauge was established have been prepared.

*The Zero of the Buxa gauge has been checked from the G. T. S. Bench marks Nos. 125 and 126 on line 70K and found to be 169·91 feet above the Bengal P. W. D.

†On and from 1st January 1931, High water level and Low water level readings are shown at Swarupganj.

(A) The value of zero of gauge at the station was at P. W. D. datum from 1st to 17th October 1934, and 45·86 P. W. D. datum from 18th to

The 4th February 1935.

NGAL.

month of October 1934 and the highest reading of each gauge above P. W. D. datum as well as the lowest gauge reading since 1876.

				River Bhagirathi.		River Jalangi.				River Brahmaputra.	
A) Rampur-Boalia. Zero of gauge is at W D. datum.		Goalundo. Zero of gauge is 1·409 ft. above Bengal P. W. D. datum.		Berhampore. Zero of guage is at P. W. D. datum.		Swarupganj.† Zero of guage is at P. W. D. datum.				Gauhati. Zero of gauge is 136 958 ft. above P. W. D. datum.	
From Benares, 471.	From Rajmahal, 64.	From Benares, 591.	From Rampur-Boalia, 120.								
h August 1879. 62 24 ft.		10th August 1931. 29·60 ft.		14th August 1890. 63·46 ft.		25th September 1900. 35 30 ft.				24th August 1906. 169 25 ft.	
4th April 1931. 32·05 ft.		8th February 1914. 2 41 ft.		26th May 1884. 32 00 ft.		7th May 1896. 2 11 ft.				9th February 1888. 129 23 ft.	
Height above zero of gauge.	Height above P. W. D. datum	Height above zero of gauge.	Height above P. W. D. datum.	Height above zero of gauge.	Height above P. W. D. datum.	Height above zero of guage		Height above P. W. D. datum.		Height above zero of gauge.	Height above P. W. D. datum.
						H. W. L.	L. W. L.	H. W. L.	L. W. L.		
15	16	17	18	19	20	21	22	23	24	25	26
58·80	58·80	24·40	25·809	53·90	53·90	26·66	26·47	26·66	26·47	18·10	155·058
58·75	58·75	24·30	25·709	54·00	54·00	26·32	26·16	26·32	26·16	17·60	154·558
58·55	58·55	24·20	25·609	53·95	53·95	26·05	25·92	26·05	25·92	16·90	153·858
58·00	58·00	24·00	25·409	53·80	53·80	25·84	25·71	25·84	25·71	16·20	153·158
57·25	57·25	23·80	25·209	53·10	53·10	25·74	25·62	25·74	25·62	15·80	152·758
56·50	56·50	23·60	25·009	52·30	52·30	25·50	25·28	25·50	25·28	15·60	152·558
55·90	55·90	23·30	24·709	51·50	51·50	25·00	24·71	25·00	24·71	16·40	153·358
55·20	55·20	23·10	24·509	50·70	50·70	24·42	24·09	24·42	24·09	16·00	152·958
54·55	54·55	22·80	24·209	49·80	49·80	23·74	23·35	23·74	23·35	15·80	152·758
54·00	54·00	22·50	23·909	48·90	48·90	22·90	22·48	22·90	22·48	15·60	152·558
53·10	53·10	22·30	23·709	48·00	48·00	21·98	21·54	21·98	21·54	15·40	152·358
52·20	52·20	22·10	23·509	47·10	47·10	20·92	20·50	20·92	20·50	15·10	152·058
51·10	51·10	21·90	23·309	46·20	46·20	19·84	19·48	19·84	19·48	15·00	151·958
50·30	50·30	21·70	23·109	45·50	45·50	18·80	18·36	18·80	18·36	14·80	151·758
49·70	49·70	21·90	23·309	44·85	44·85	17·82	17·78	17·82	17·78	14·60	151·558
49·20	49·20	22·60	24·009	44·50	44·50	17·12	16·76	17·12	16·76	14·40	151·358
48·75	48·75	23·00	24·409	44·10	44·10	16·22	15·98	16·22	15·98	14·10	151·058
4·90	50·76	23·00	24·409	43·80	43·80	15·80	15·66	15·80	15·66	14·00	150·958
4·70	50·56	22·90	24·309	43·55	43·55	15·59	15·44	15·59	15·44	12·30	149·258
4·70	50·56	22·90	24·309	43·40	43·40	15·51	15·37	15·51	15·37	11·00	147·958
4·50	50·36	22·80	24·209	43·20	43·20	15·54	15·26	15·54	15·26	12·10	149·058
4·30	50·16	22·70	24·109	42·90	42·90	15·42	15·05	15·42	15·05	13·50	150·458
4·00	49·86	22·50	23·909	42·65	42·65	15·13	14·66	15·13	14·66	13·20	150·158
3·80	49·66	22·50	23·909	42·30	42·30	14·65	14·14	14·65	14·14	12·50	149·458
3·40	49·26	22·50	23·909	41·95	41·95	14·07	13·66	14·07	13·66	12·30	149·258
3·10	48·96	22·50	23·909	41·60	41·60	13·51	13·16	13·51	13·16	11·10	148·058
2·75	48·61	22·40	23·809	41·30	41·30	12·87	12·59	12·87	12·59	10·80	147·758
2·50	48·36	22·30	23·709	40·95	40·95	12·29	12·06	12·29	12·06	10·50	147·458
2·20	48·06	22·00	23·409	40·70	40·70	11·71	11·55	11·71	11·55	10·10	147·058
1·90	47·76	21·60	23·009	40·35	40·35	11·22	11·00	11·22	11·00	8·40	145·358
1·70	47·56	21·20	22·609	40·10	40·10	10·74	10·53	10·74	10·53	7·20	144·158
Vide footnote below.		22·75	24·159	46·16	46·16	18·67	18·40	18·67	18·40	13·75	150·708

e Kidderpore Old Dock Sill. The values of the highest and lowest readings have similarly been altered. Printed notes on the correction to be applied to all reduced
-m.

st October 1934. Hence the average level at the station is twice shown thus :— from 1st to 17th October 1934— 54 23, and from 18th to 31st October 1934— 3·46.

F. RUSSELL, *Personal Assistant to the Chief Engineer to the Government of Bengal, Irrigation Department.*

IRRIGATION DEPARTMENT,

Statement showing heights above P. W. D. datum and low water in the rivers Ganges, Bhagirathi, Jalangi and Brahmaputra for the

Date.	River Ganges.													
	Mirzapur. Zero of gauge is 200·00 ft. above P. W. D. datum.		Benares. Zero of gauge is 197·05 ft. above P. W. D. datum.		Buxar.* Zero of gauge is 169·91 ft. above Bengal P. W. D. datum.		Dinapore. Zero of gauge is 135·51 ft. above P. W. D. datum.		Monghyr. Zero of gauge is at P. W. D. datum.		Rajmahal. Zero of gauge is at P. W. D datum.	
	Distance in miles.	From Allahabad, 86.	From Allahabad, 134.	From Mirzapur, 48.	From Benares, 90.		From Benares, 177.	From Buxar, 87.	From Benares, 287.	From Dinapore, 110.	From Benares, 407.	From Monghyr, 120.
	Highest guage reading.	2nd September 1916. 265·97 ft.	2nd September 1916. 244·55 ft.		7th September 1919. 203·40 ft.		21st August 1923. 172·41 ft.		8th September 1901. 129·60 ft.		15th August 1913. 90·37 ft.	
	Lowest gauge reading.	11th April 1878. 198·02 ft.	20th May 1879. 191·70 ft.		15th May 1914. 161·65 ft.		26th April 1902. 136·11 ft.		2nd May 1914. 95·75 ft.		12th May 1916. 55·46 ft.	
		Height above zero of gauge.	Height above P. W. D. datum.	Height above zero of gauge.	Height above P. W. D. datum.	Height above zero of gauge.	Height above P. W. D. datum.	Height above zero of gauge.	Height above P. W. D. datum.	Height above zero of gauge.	Height above P. W. D. datum.	Height above zero of gauge.	Height above P. W. D. datum.
1	2	3	4	5	6	7	8	9	10	11	12	13	14
1st ..	..	21·50	221·50	7·58	204·63	10·75	180·66	14·80	150·31	108·00	108·00	68·80	68·80
2nd ..	..	21·25	221·25	7·25	204·30	10·67	180·58	14·80	150·31	107·90	107·90	68·50	68·50
3rd ..	..	21·00	221·00	7·00	204·05	10·58	180·49	14·80	150·31	107·80	107·80	68·20	68·20
4th ..	..	20·83	220·83	6·75	203·80	10·50	180·41	14·80	150·31	107·60	107·60	68·00	68·00
5th ..	..	20·58	220·58	6·58	203·63	10·42	180·33	14·80	150·31	107·50	107·50	67·90	67·90
6th ..	..	20·50	220·50	6·42	203·47	10·33	180·24	14·80	150·31	107·40	107·40	67·70	67·70
7th ..	..	20·33	220·33	6·25	203·30	10·25	180·16	14·80	150·31	107·30	107·30	67·50	67·50
8th ..	..	20·00	220·00	6·00	203·05	10·00	179·91	14·80	150·31	107·10	107·10	67·35	67·35
9th ..	..	19·92	219·92	6·00	203·05	9·83	179·74	14·80	150·31	106·80	106·80	67·20	67·20
10th ..	..	19·83	219·83	5·67	202·72	9·67	179·58	14·80	150·31	106·60	106·60	67·00	67·00
11th ..	..	19·67	219·67	5·42	202·47	9·50	179·41	14·80	150·31	106·50	106·50	66·90	66·90
12th ..	..	19·58	219·58	5·42	202·47	9·33	179·24	14·80	150·31	106·40	106·40	66·80	66·80
13th ..	..	19·58	219·58	5·42	202·47	9·25	179·16	14·80	150·31	106·30	106·30	66·65	66·65
14th ..	..	19·58	219·58	5·42	202·47	9·17	179·08	14·80	150·31	106·30	106·30	66·65	66·65
15th ..	..	19·58	219·58	5·42	202·47	9·08	178·99	14·80	150·31	106·30	106·30	66·40	66·40
16th ..	..	19·50	219·50	5·33	202·38	9·00	178·91	14·80	150·31	106·20	106·20	66·25	66·25
17th ..	..	19·33	219·33	5·33	202·38	8·92	178·83	14·80	150·31	106·20	106·20	66·00	66·00
18th ..	..	19·25	219·25	5·17	202·22	8·75	178·66	14·80	150·31	106·10	106·10	65·85	65·85
19th ..	..	19·08	219·08	5·00	202·05	8·67	178·58	14·80	150·31	106·10	106·10	65·65	65·65
20th ..	..	19·00	219·00	4·83	201·88	8·58	178·49	14·80	150·31	105·90	105·90	65·40	65·40
21st ..	..	18·88	218·88	4·58	201·63	8·58	178·49	14·80	150·31	105·70	105·70	65·20	65·20
22nd ..	..	18·83	218·83	4·42	201·47	8·60	178·41	14·80	150·31	105·50	105·50	65·05	65·05
23rd ..	..	18·75	218·75	4·42	201·47	8·42	178·33	14·80	150·31	105·30	105·30	64·95	64·95
24th ..	..	18·67	218·67	4·42	201·47	8·42	178·33	14·80	150·31	105·20	105·20	64·80	64·80
25th ..	..	18·58	218·58	4·33	201·38	8·33	178·24	14·60	150·11	105·10	105·10	64·60	64·60
26th ..	..	18·42	218·42	4·33	201·38	8·33	178·24	14·50	150·01	105·00	105·00	64·50	64·50
27th ..	..	18·33	218·33	4·17	201·22	8·25	178·16	14·40	149·91	104·80	104·80	64·35	64·35
28th ..	..	18·17	218·17	4·00	201·05	8·25	178·16	14·40	149·91	104·60	104·60	64·30	64·30
29th ..	..	18·00	218·00	3·75	200·80	8·25	178·16	14·40	149·91	104·40	104·40	64·10	64·10
30th ..	..	17·83	217·83	3·67	200·72	8·08	177·99	14·40	149·91	104·20	104·20	64·00	64·00
31st ..													
Average level	..	19·48	219·48	5·35	202·40	9·23	179·14	14·73	150·24	106·20	106·20	66·22	66·22

Note.—Since the 1st January 1920 the datum of all gauges has been finally altered to refer to the Bengal Public Works Department datum which is 6·25 feet above recorded since each gauge was established have been prepared.

*The Zero of the Buxar gauge has been checked from the G. T. S. Bench marks Nos. 125 and 126 on line 70K and found to be 169·91 feet above the Bengal

†On and from 1st January 1931, High water level and Low water level readings are shown at Swarupganj.

(A) The value of zero of gauge at the station was 45·80 P. W. D. datum from 1st to 5th November 1934 and 42·20 P. W. D. datum from 6th to 30th November

The 4th February 1935.

BENGAL.

month of November 1934 and the highest reading of each gauge above P. W. D. datum as well as the lowest gauge reading since 1876.

				River Bhagirathi.		River Jalangi.				River Brahmaputra.	
(A) Rampur-Boala. Zero of gauge is at P. W. D. datum.		Goalundo. Zero of gauge is 1·409 ft. above Bengal P. W. D. datum.		Berhampore. Zero of gauge is at P. W. D. datum.		Swarupganj.† Zero of guage is at P. W. D. datum.				Gauhati. Zero of gauge is 136·958 ft. above P. W. D. datum.	
From Benares, 471.	From Rajmahal, 64.	From Benares, 591.	From Rampur-Boalia, 120.								
6th August 1879. 62·24 ft.		16th August 1931. 29·60 ft.		14th August 1890. 63·46 ft.		25th September 1900. 35·30 ft.				24th August 1906. 109·25 ft.	
24th April 1931. 32·05 ft.		8th February 1914. 2·41 ft.		26th May 1884. 32·00 ft.		7th May 1896. 2·11 ft.				9th February 1888. 129·23 ft.	
Height above zero of gauge.	Height above P. W. D. datum.	Height above zero of gauge.	Height above P. W. D. datum.	Height above zero of gauge.	Height above P. W. D. datum.	Height above zero of guage.		Height above P. W. D. datum.		Height above zero of gauge.	Height above P. W. D. datum.
						H. W. L.	L. W. L.	H. W. L.	L. W. L.		
15	16	17	18	19	20	21	22	23	24	25	26
1·45	47·31	20·90	22·309	39·90	39·90	10·32	10·19	10·32	10·19	6·10	143·058
1·20	47·06	20·70	22·109	39·65	39·65	9·98	9·80	9·98	9·80	5·60	142·558
1·00	46·86	20·40	21·809	39·45	39·45	9·77	9·58	9·77	9·58	5·20	142·158
0·70	46·56	20·10	21·509	39·25	39·25	9·72	9·46	9·72	9·46	5·00	141·958
0·50	46·36	20·10	21·509	39·05	39·05	9·76	9·36	9·76	9·36	4·00	140·958
3·70	45·99	19·90	21·309	38·90	38·90	10·00	9·34	10·00	9·34	3·60	140·558
3·50	45·79	19·70	21·109	38·75	38·75	10·21	9·39	10·21	9·39	3·30	140·258
3·35	45·64	19·50	20·909	38·60	38·60	10·20	9·40	10·20	9·40	3·00	139·958
3·20	45·49	19·30	20·709	38·40	38·40	10·18	9·17	10·18	9·17	2·80	139·758
3·10	45·39	19·20	20·609	38·25	38·25	10·08	9·19	10·08	9·19	2·60	139·558
3·00	45·29	19·20	20·609	38·10	38·10	10·06	9·04	10·06	9·04	2·60	139·558
2·90	45·19	19·00	20·409	38·00	38·00	9·50	8·76	9·50	8·76	2·50	139·458
2·80	45·09	18·80	20·209	37·90	37·90	8·86	8·38	8·86	8·38	2·60	139·558
2·60	44·89	18·60	20·009	37·75	37·75	8·38	8·04	8·38	8·04	1·10	138·058
2·50	44·79	18·40	19·809	37·65	37·65	7·98	7·80	7·98	7·80	1·00	137·958
2·45	44·74	18·30	19·709	37·50	37·50	7·87	7·58	7·87	7·58	1·00	137·958
2·35	44·64	18·20	19·609	37·40	37·40	7·81	7·47	7·81	7·47	0·90	137·858
2·20	44·49	18·10	19·509	37·25	37·25	7·94	7·46	7·94	7·46	1·40	138·358
1·90	44·19	18·00	19·409	37·20	37·20	8·13	7·44	8·13	7·44	1·20	138·158
1·75	44·04	17·80	19·209	37·10	37·10	8·10	7·42	8·10	7·42	1·00	137·958
1·65	43·94	17·70	19·109	36·90	36·90	8·11	7·32	8·11	7·32	0·90	137·858
1·40	43·69	17·50	18·909	36·70	36·70	8·00	7·26	8·00	7·26	0·80	137·758
1·25	43·54	17·30	18·709	36·60	36·60	7·88	7·06	7·88	7·06	0·80	137·758
1·15	43·44	17·10	18·509	36·50	36·50	7·70	6·96	7·70	6·96	0·60	137·558
1·00	43·24	17·10	18·509	36·40	36·40	7·48	6·80	7·48	6·80	0·60	137 558
0·90	43·19	17·00	18·409	36·30	36·30	7·33	6·64	7·33	6·64	0·50	137·458
0·75	43·04	16·90	18·309	36·20	36·20	6·87	6·51	6·87	6·51	0·00	136·958
0·60	42·89	16·80	18·209	36·10	36·10	6·62	6·36	6·62	6·36	(Below zero.) 0·10	136·858
0·50	42·79	16·60	18·009	36·00	36·00	6·37	6·18	6·37	6·18	0·20	136·758
0·40	42·69	16·50	17·909	35·80	35·80	6·20	6·06	6·20	6·06	0·20	136 758
Vide foot note below.		18·49	19·899	37·65	37·65	8·58	8·05	8·58	8·05	2·01 (Above zero.)	138·968

the Kidderpore Old Dock Sill. The values of the highest and lowest readings have similarly been altered. Printed notes on the correction to be applied to all reduced leve P. W. D. datum.

1934. Hence the average level at the station is twice shown thus :—from 1st to 5th November 1934—0·97, and from 6th to 30th November 1934—2·04.

J. F. RUSSELL, *Personal Assistant to the Chief Engineer to the Government of Bengal, Irrigation Department.*

Statement showing the gauge readings at Dacca Waterworks Station on the river Buriganga for the week ending 26th January 1935.

Date.	At highest water.		At lowest water.		Commencement of—		Remarks.	
	Time.	Reading.	Time.	Reading.	Ebb tide.	Flow tide.	7 a.m.	5 p.m.
1935.								
20th January ..	12-10	4·2	..	..	12-20	..	2·8	3·05
21st „ ..	13-0	4·1	6-50	2·5	13-10	7-2	2·5	3·3
22nd „ ..	13-45	4·5	7-40	2·9	13-55	7-50	3·0	3·8
23rd „ ..	14-30	4·9	8-25	3·3	14-40	8-42	3·5	4·2
24th „ ..	15-15	5·05	9-15	3·45	15-27	9-27	3·8	4·6
25th „ ..	16-5	5·15	10-5	3·55	16-15	10-15	4·1	4·9
26th „ ..	16-50	5·0	10-55	3·4	17-0	11-5	4·0	5·0

B. M. on settling tank 39·49 O. M. S. L. Zero is at O. M. S. L.

Notable high and low water-levels of previous years.

		Taken at high tide.			Taken at low tide.
27th August	1906 ..	70·5	23rd February	1907 ..	51·06
5th September	1909 ..	66·86	13th „	1908 ..	51·06
10th August	1910 ..	69·86	12th March	1912 ..	51·06
1st „	1911 ..	68·46	6th „	1914 ..	50·60
13th „	1912 ..	67·16	22nd February	1915 ..	50·30
31st „	1915 ..	69·7	15th „	1916 ..	50·60
8th „	1916 ..	68·1	3rd March	1917 ..	51·0
12th „	1917 ..	67·1	21st February	1918 ..	51·40
13th „	1918 ..	69·12	26th „	1919 ..	50·4
2nd „	1919 ..	66·8	18th „	1920 ..	50·9
8th September	1920 ..	66·9	19th „	1921 ..	50·9
28th July	1921 ..	68·4	8th March	1922 ..	51·05
10th August	1922 ..	68·00	14th „	1923 ..	50·8
31st July	1923 ..	66·15	16th February	1924 ..	50·50
29th August	1924 ..	68·82	5th March	1925 ..	50·9
8th September	1925 ..	68·52	9th February	1926 ..	2·2
15th August	1926 ..	19·6	27th „	1927 ..	2·10
17th September	1927 ..	18·70	16th „	1928 ..	2·2
22nd August	1928 ..	20·0	21st „	1929 ..	2·0
13th July	1929 ..	17·8	24th „	1930 ..	2·3
12th September	1930 ..	18·65	28th „	1931 ..	2·2
16th August	1931 ..	21·7	18th „	1932 ..	1·8
6th September	1932 ..	18·5	6th „	1933 ..	2·10
7th „	1933 ..	17·80	26th March	1934 ..	2·40
23rd August	1934 ..	19·35			

N.B.—Zero of the gauge at Dacca Waterworks prior to 11 a.m. on the 8th January 1926= −48·51 with reference to P. W. D. datum.

Zero of the gauge at Dacca Waterworks since 11 a.m. of the 8th January 1926=0·00 with reference to P. W. D. datum.

[ILLEGIBLE], *Executive Engineer,*
Khulna Division.

Khulna, the 2nd February 1935.

Resolution on the Seventy-second Annual Report of the Government Cinchona Plantations and Factory in Bengal for the year 1933-34.

GOVERNMENT OF BENGAL.

Revenue Department.

Cinchona.

CALCUTTA, THE 1ST FEBRUARY 1935.

RESOLUTION—No. 2024Cin.

Read—

The Seventy-second Annual Report of the Government Cinchona Plantations and Factory in Bengal for the year 1933-34.

Read also—

The reports of the previous three years. Mr. C. C. Calder held charge of the office of Superintendent throughout the year.

2. Of the accumulated stock of crude quinine sulphate which Government are endeavouring to reduce, only a sample of 115 lbs. was sold to Messrs. Smith Stanistreet and Company during the year under report. The balance of the stock of this drug on 31st March 1934 stood at 126,962·29 lbs. Of the accumulated stock of bark 230,400 lbs. were sold to the Government of Madras and 800 lbs. to others during the year, and the closing balance on 31st March 1934 was 1,291,485 lbs. By these sales a reduction of the surplus stock of bark by over two lakhs of pounds was effected. The total quantity of cinchona products manufactured during the year was 65,614 lbs. and the total quantity sold was 61,800 lbs. Sales of manufactured products were, therefore, less than production by 3,814 lbs. Steps are now being taken to restrict the bark harvests to prevent the further accumulation of stocks.

3. The total area under cinchona at the end of the year was 2,686 acres. Extensions amounting to 132·5 acres were carried out during the year under review in the Munsong Plantation only.

4. The Mungpoo Plantation is relatively free of disease and it continues to be in a thriving condition, thus making good the losses caused by disease in Munsong. In the latter plantation disease seems to have caused serious damage, and attempts to eradicate it have not yet met with success. The work of investigation into the disease has been in progress at Pusa, Toklai, Delhi and Edinburgh and during the year, Munsong was visited by Miss Burt of the Lady Hardinge Medical College, Delhi, with a view to obtaining further specimens to work on. In Munsong all the bark harvested came from dead and dying trees with the exception of a small area of 4 acres coppiced in the Sangseer division. A fire broke out during the year at the bottom of this plantation alongside the Sikkim-Bengal boundary, but it was prevented from spreading to areas containing cinchona. The cause of the fire is unknown.

5. The quantity of Bengal bark harvested in the year of report was 1,131,960 lbs. against 1,445,762 lbs. in the previous year.

6. Altogether 1,436,796 lbs. of dried bark were treated in the factory during the year—the largest quantity on record. Of this 1,268,365·5 lbs. were Bengal bark and the rest belonged to the Government of India.

7. In recent years all the quinine has been extracted in the crude or semi-purified form and thus stocked. The total quantity of quinine sulphate manufactured during the year was 51,094 lbs., of which 5,366 lbs. belonged to the Government of India. The cost of manufacture from the bark amounted to Rs. 2·721 per lb. The total quantity of cinchona febrifuge manufactured during the year was 28,523 lbs., of which 3,394 lbs. represents the share of the Government of India. The manufacturing cost of the febrifuge was Rs. 1·820 per lb. As in

previous years the demand for cinchona febrifuge exceeded the supply. The deficiency was met in part by taking 5,054 lbs. from Government of India stocks, but these are now running low, and will no longer be available for the Bengal area of distribution.

8. The gross receipts were Rs. 9,73,244-5, and after deducting Rs. 45,486 due to the Government of India on account of the sale of that Government's febrifuge powder, Rs. 47,412-12 due to the Jail Department for distribution work, and Rs. 5,293 on account of sales outstanding, the net receipts amounted to Rs. 8,75,052-9. The total expenditure of the department including pensionary charges was Rs. 4,33,168-13. The receipts and expenditure were higher by Rs. 2,37,773-9 and Rs. 37,796-11, respectively, than in the previous year. The profit on the year's working according to the profit valuation account amounted to Rs. 4,01,722-4, as compared with Rs. 4,38,238-3 in 1932-33, which would seem to indicate that the financial result of the year's working was not so satisfactory as in the previous year. Actually, however, the reverse is the case. In 1932-33 sales increased by approximately 2½ lakhs of rupees and net receipts (excess of actual money receipts over actual money expenditure) by about Rs. 2 lakhs. The accumulation of stocks has also been checked. Whereas in 1932-33 the value of the stocks held rose by approximately 3½ lakhs of rupees, the corresponding rise in 1933-34 was only about Rs. 8,000—a very satisfactory result, which however, was due to special causes, notably the heavy sale of bark to the Government of Madras, and the larger amount purchased by Government itself for free distribution.

9. Government are satisfied from the report that the Bengal Cinchona Department has been efficiently managed during the year under review. The thanks of Government are due to Mr. Calder, the Superintendent of Cinchona Cultivation, to Mr. S. C. Sen, the Quinologist, and to the other officers of the department for the good work done by them.

Order—Ordered that this resolution be published in the *Calcutta Gazette* and that a copy with a copy of the report be submitted to the Government of India.

By order of the Governor in Council,

O. M. MARTIN,

Secy. to the Govt. of Bengal.

GOVERNMENT OF BENGAL.

Local Self-Government Department.

Local Self-Government (Municipalities).

CALCUTTA, THE 1ST FEBRUARY 1935.

RESOLUTION—No. 831M.

Resolution under section 7 (2) of the Garden Reach Municipality Act, 1932.

Minister-in-charge: The Hon'ble Sir Bijoy Prasad Singh Roy, Kt.

Read—

The Report of the Garden Reach Committee.

In order to provide for the exclusion of the "Garden Reach area" from the limits of the Corporation of Calcutta and to constitute the area as a municipality under the Bengal Municipal Act, 1884 (re-enacted by Bengal Act XV of 1932), the Garden Reach Municipality Act, 1932 (Ben. Act III of 1932) was passed by the Bengal Legislative Council in February 1932, and was published in the *Calcutta Gazette* of the 7th April 1932, for general information. Under section 3 of this Act, a Committee was appointed by Government to report on all matters incidental to the exclusion of the area from the limits of the Corporation and its constitution as a municipality under the Bengal Municipal Act. The Committee submitted its report on the 28th April 1933 and it was published at pages 738-793 of the supplement to the *Calcutta Gazette* of the 29th June 1933. In pursuance of section 7 (2) of the Garden Reach Municipality Act, Government invited the views of the Corporation on such of the recommendations of the Committee as mainly concerned them. The opinion of the Corporation was not received by Government till February 1934. An informal conference was held on the 23rd August 1934, with the representatives of the Corporation and of the Garden Reach area, to discuss some of the recommendations of the Committee. It was at first proposed to start the new Garden Reach Municipality from the 1st October 1934; but in view of certain practical difficulties in constituting the new municipality in the middle of a financial year, Government decided that the municipality should begin to function with effect from the 1st April 1935.

2. The Committee's recommendations have been carefully considered by Government along with the views expressed by the Corporation, and the Government of Bengal (Ministry of Local Self-Government) are pleased to pass the following orders, under section 7 (2) of the Garden Reach Municipality Act, on the various points raised in the Committee's report:—

(1) **Boundaries.**—The Committee has noticed certain minor discrepancies between the definition of the "Garden Reach area" in section 2 (1) of the Act and the Schedule to the Act which amends the boundaries

of the Calcutta Municipality as defined in Schedule I of the Calcutta Municipal Act, 1923. It has accordingly proposed certain alterations of the eastern boundary of the Garden Reach Municipality so as to include certain areas in, and exclude certain other areas from, the "Garden Reach area" as definied in the Act. The Committee has also suggested that the southern boundary of the Garden Reach Municipality should be notified as the northern boundaries of the mouzas Akra, Jaganathnagar, Panchur, Makhalhati and Ramdashhati as determined during the last survey and settlement operations in the district of 24-Parganas and that these alterations might be adopted by Government under section 20 of the Act.

Government have taken legal opinion and are advised that section 20 of the Garden Reach Municipality Act can be invoked only if any practical difficulty arises in carrying out the provisions of the Act. As there is no difficulty in adopting the eastern boundary of the Garden Reach Municipality as defined in the Act, Government have decided not to accept the Committee's recommendations in regard to this boundary. In view, however, of the practical difficulties, mentioned by the Committee, in adopting the statutory southern boundary of the old Garden Reach Municipality, Government are pleased to direct, under section 20 of the Act, that the southern boundary of the municipality shall be as recommended by the Committee.

(2) **Division of the municipality into wards and the number of Commissioners.**—The Committee has recommended that the new municipality be divided into five wards for general electorate constituencies and one industrial constituency and that the number of Municipal Commissioners be fixed at twenty, five of whom should be appointed by the Local Government and ten and five should be elected from the general electorate and industrial constituencies respectively. If, however, it is found impossible to constitute an industrial constituency under section 18 (1) of the Bengal Municipal Act, 1932, the Committee recommends that the number of appointed Commissioners should be increased to ten, of whom five should represent the industrial concerns and two of the remaining five should represent labour.

Government accept the Committee's recommendation that the number of Commissioners should be twenty. The first Commissioners of the municipality will be appointed by Government under section 9 of the Act and shall hold office for 2 years. As regards the other recommendations of the Committee mentioned above, these will be taken into consideration by Government when passing orders under section 10 of the Act in respect of the division of the municipality into wards, the number of Commissioners to be elected from each ward and other matters.

(3) **Adjustment of finances and loans.**—The Committee has divided this subject into two parts, viz.—

(*i*) liability of the Garden Reach Municipality for loans and contracts in respect of the Moore-Bateman Water-supply scheme, and

(*ii*) liability of the Calcutta Corporation under section 90 of the Calcutta Municipal Act, 1923.

With regard to (*i*) the Committee observes as follows:—

"The total expenditure on the Moore-Bateman scheme up to 30th November 1932, came to Rs. 2,47,01,303 inclusive of the cost of laying

the Garden Reach main, *i.e.*, Rs. 6,76,283. The Corporation claim that the share which should be apportioned to the Garden Reach Municipality amounts to Rs. 20⅞ lakhs (Appendix B). * * * *"

The sum of Rs. 20⅞ lakhs is made up of the following items:—

	Rs.
(*a*) Enlargement of plant and machinery of the Pulta and Talla pumping stations and provision of an enlarged main to carry the increased supply of water from Pulta to Talla	9,82,373
(*b*) Provision of a wider zone main for District No. IV so as to enable a larger quantity of water to be carried to this district and thus made available for Garden Reach	3,09,631
(*c*) Provision of a sub-zone main for Garden Reach	6,76,283

The Committee is of opinion that the Garden Reach Municipality should not bear any liability for those portions of the Moore-Bateman scheme which are not exclusively for its benefit and can be put to good use by the Calcutta Corporation for the benefit of other areas, and its conclusions are as follows:—

Item (*a*).—No portion of the expenditure under this item should be apportioned to the Garden Reach Municipality because—

(*i*) the framers of the Moore-Bateman scheme overestimated the increase in the population of the Garden Reach area which was likely to occur between 1921 and 1941, and underestimated the probable increase in the population of Calcutta, with the result that the increased water-supply made available by the revised scheme will not be used in Garden Reach but will be required in Calcutta proper; and

(*ii*) the overestimate of the population of Garden Reach has saved the Corporation from the necessity of framing a fresh scheme of water-supply for wards 21, 22 and 27 (Ballygunge, Bhowanipore and Tollygunge which have been extensively developed by the Calcutta Improvement Trust), and it is therefore unfair to saddle Garden Reach with expenditure which is unnecessary for the needs of Garden Reach but is immediately required for the needs of Calcutta.

Item (*b*).—No part of the expenditure under this item also can properly be allocated to Garden Reach as, in the opinion of the Committee, the population of District No. IV in 1941 was similarly underestimated in the Moore-Bateman scheme and the increased water-supply made available through the wider mains is for all practical purposes necessary for the increased population in District IV and the Dock area of Garden Reach (without Garden Reach itself).

Regarding *item* (*c*) the Committee observes as follows:—

"We consider that the difference between the cost of the 42" main from Sterndale Road to the junction of Garden Reach Road and Circular Garden Reach Road and the cost of the main of 24" dimensions which it is claimed would have been sufficient for the Dock area should be the liability to be assigned to the Garden Reach Municipality. According to the evidence of the Waterworks Constructional Engineer of the Calcutta Corporation, the cost of construction of a 24" main to Hide

Road would amount roughly to about Rs. 2 lakhs while the actual expenditure on the 42" main will amount to Rs. 7,71,000; the difference being Rs. 5,71,000.

"A separate line of enquiry leads us to approximately the same conclusion. The Waterworks Engineer also stated before us that one-third of the total supply of water available at the Garden Reach main will be required for the Dock area and two-thirds will be available for Garden Reach. On this basis, two-thirds of the expenditure on the Garden Reach main might be apportioned to Garden Reach and one-third to the Dock area, that is to say, to the Calcutta Corporation. Two-thirds of Rs. 7,71,000 amount to Rs. 5,14,000."

The Committee, therefore, recommends that Garden Reach should be made liable for a sum of about Rs. 5½ lakhs in respect of the Moore-Bateman scheme.

As regards (*ii*), viz., the Corporation's liability under section 90 of the Calcutta Municipal Act, 1923, from an examination of the annual accounts of the Corporation, the Committee has come to the conclusion that items of expenditure amounting to Rs. 2,75,039-9-3, shown in column 8(*a*) of Appendix D of their report, may fairly be adjusted against the sum of Rs. 6 lakhs which the Corporation is required to spend on "Original improvement works" within Garden Reach under this section.

The liability of the Garden Reach Municipality is calculated by the Committee (page 21 of the Committee's Report) in the following manner:—

	Rs.	a.	p.
(*i*) Liability of Garden Reach for loans and contracts in respect of the Moore-Bateman scheme ..	5,50,000	0	0
Add—Expenditure from loan account for tube wells ..	9,100	0	0
Liability of Garden Reach	5,59,100	0	0
(*ii*) Liability of the Calcutta Corporation under section 90, Calcutta Municipal Act, 1923	6,00,000	0	0
Less—Amount spent on "original improvement works" (Appendix D to the Committee's Report) ..	2,75,039	9	3
Liability of Calcutta	3,24,960	6	9

The nett liability of the Garden Reach Municipality, according to the Committee's calculations, comes to Rs. 2,34,139-9-3 or Rs. 2,34,000 in round figures.

After careful consideration of the points raised by the Committee Government have come to the following decisions in this matter:—

(*i*) *Liability of the Garden Reach Municipality for loans and contracts in respect of the Moore-Bateman scheme.*

(*a*) *Enlargement of plant and machinery at Palta and Talla and provision of an enlarged main from Palta to Talla (Rs. 9,82,373).*—It will be seen from the figures given in Appendix A to this resolution that the increased water-supply made available by the Moore-Bateman scheme would be just sufficient in 1941 to meet the needs of Calcutta proper, Maniktolla, Cossipore-Chitpur and the Dock area of Garden

Reach. As the distribution system has not been completed in the Garden Reach area, Garden Reach has not so far benefited from the Moore-Bateman scheme to any appreciable extent. Government have, therefore, decided that no part of the cost under this head should be borne by the new Garden Reach Municipality.

(*b*) *Provision of a wider zone main for District No. IV* (*Rs. 3,09,631*).—Government do not consider that the arguments advanced by the Committee in support of its recommendation that Garden Reach should not bear any liability for the cost under this head are convincing, as the figures of population on which these arguments are based have been found on scrutiny to be not quite correct. It appears from the report of the Moore-Bateman scheme and from the figures given in Appendix B of the Committee's report that District No. IV zone mains were meant to supply the needs of the estimated population of wards 21 to 25 of Calcutta proper and the municipalities of Garden Reach, South Suburban and Tollygunge in 1941.

This estimate was based on the census figures of 1911 and on the figures of population for the years 1921, 1931 and 1941, as calculated on the assumption that there would be an increase of 16·7 per cent. in each decade, the increase during the decade from 1911 to 1921 being 16·7 per cent. On this assumption the population of wards 21 to 25 in 1941 was estimated to be 285,000. According to the census figures of 1921 and 1931, however, the actual population of these wards, as shown below, increased from 196,315 in 1921 to 242,218 in 1931, showing an increase of 23·3 per cent.:—

Name of ward.	Population. 1921.	1931.
Ballygunge 21	50,854*	30,999
Bhowanipore 22	57,378	79,684
Aliporo 23	22,184	30,020
Ekbalpur 24	31,420	32,822
Watganj 25 (including Hastings)	34,479	32,463
Tollygunge 27	..	40,730
	196,315	246,718
Deduct—For Hastings		4,500
		242,218

*Including Tollygunge ward.

If this rate of increase is maintained during the next decade, there is likely to be an increase of nearly 56,000 over the population of 1931; that is to say, the population of these wards would be 298,000 in place of 285,000 as taken in the Moore-Bateman scheme. It would not, therefore, be quite correct to hold that the population of the area to be served by the District No. IV zone mains in 1941 was materially underestimated in the Moore-Bateman scheme and Government do not accept the Committee's recommendation that no portion of the cost of these mains should be debited to Garden Reach. As, however, about one-third of the total supply of water made available for Garden Reach by the District IV mains will be required for the Dock area, which will remain within Calcutta, Government have come to the conclusion that the Garden Reach Municipality should not be made liable for more than two-thirds of the amount of Rs. 3,09,631, or, in other words, the municipality should pay to the Calcutta Corporation a sum of *Rs. 2,06,000* in round figures under this head.

(*c*) *Provision of the sub-zone main for Garden Reach.*—For the reasons given by the Committee in regard to this item, Government have come to the conclusion that not more than *Rs. 5·71 lakhs* is debitable to the Garden Reach Municipality under this head.

(*d*) *Supervision charges and Moore-Bateman's fees.*—A sum of Rs. 95,467 has been apportioned under these heads by the Corporation to the Garden Reach Municipality (*vide* items 8 and 9 of Appendix B to the Committee's report). Government have decided that a proportionate share of the cost under these heads should be debited to the Garden Reach Municipality and that this should bear the same proportion to Rs. 95,467 as the total liability of Garden Reach for the Moore-Bateman scheme, as now fixed by Government, viz., Rs. 7·77 lakhs, bears to the sum of Rs. 19,70,916, which was claimed by the Calcutta Corporation. On this principle, the amount of the liability of Garden Reach under this head comes to Rs. 37,636 or *Rs. 38,000* in round figures.

(*ii*) *Liability of the Corporation under section 90 of the Calcutta Municipal Act, 1923.*

From a statement furnished by the Corporation it appears that the Committee has left out certain items of expenditure amounting to Rs. 4,918-13-2 which, the Corporation considers, ought to be taken into account as expenditure on works of a permanent nature. Government accept this view of the Corporation. The total expenditure by the Corporation on "Original improvement works" in Garden Reach would thus come to Rs. 2,79,958-6-5. The nett liability of the Corporation under this head is therefore:—

Rs.	a.	p.
6,00,000	0	0
2,79,958	6	5
3,20,041	9	7

The resultant position may be stated in balance sheet form as follows :—

(*i*) Liability of Garden Reach for loans and contracts in respect of the Moore-Bateman scheme—

		Rs.	a.	p.
Provision of wider zone main in District No. IV ..		2,06,000	0	0
Garden Reach zone main		5,71,000	0	0
Supervision charges and Moore-Bateman's fees ..		38,000	0	0
		8,15,000	0	0
Add—Expenditure from loan account for tube wells ..		9,100	0	0
		8,24,100	0	0
(*ii*) Liability of the Calcutta Corporation under section 90 of the Calcutta Municipal Act, 1923 ..		6,00,000	0	0
Less—Amount spent on "Original improvement works"		2,79,958	6	5
		3,20,041	9	7
	(*a*)	8,24,100	0	0
	(*b*)	3,20,041	9	7
		5,04,058	6	5

The nett liability of the Garden Reach Municipality is, therefore, Rs. 5,04,058-6-5 or say Rs. 5,04,000 in round figures.

(4) **Method of payment of the liability of the Garden Reach Municipality.**—Government are pleased to direct that the amount of Rs. 5,04,000 payable by the Garden Reach Municipality shall be paid by means of equated annual payments spread over a period of 30 years, commencing from the fifth year of the constitution of the municipality.

The annual charges for the loans incurred by the Corporation in respect of the Moore-Bateman scheme are calculated at 7·5 per cent., namely, interest at 6 per cent. and sinking fund charges at 1·5 per cent. As recommended by the Committee, the annual payment to be made by the Garden Reach Municipality should be similarly calculated and the amount would thus be Rs. 42,674-4-11 per annum.

(5) **Arrangements for water-supply.**—Government have considered the recommendations of the Committee and the views of the Corporation on this subject and have come to the following decision :—

(*i*) The existing arrangements for the supply of filtered water in the Garden Reach area will be continued by the Corporation until the Garden Reach main is brought into operation.

(*ii*) As soon as the Garden Reach main is brought into use the Corporation will make over to the Commissioners of the Garden Reach Municipality all motor lorries, water-carts and other appliances for water-supply, bought for, or in service in, the Garden Reach area, with

the exception of the water-boat, which is now used for supplying water to certain public places and industrial concerns on the river side.

(iii) After the Garden Reach main has been laid, the Corporation shall supply filtered water to the Garden Reach Municipality, at the point where this main ends, at the rate of *4 as. per 1,000 gallons*, the maximum quantity of supply being 62·1 gallons per head per diem. This arrangement shall hold good for a period of six years from the date of constitution of the municipality.

(iv) *A Venturi meter* should be installed on the Garden Reach main, as quickly as possible, for calculating the supply of water and the unmetered supply shall be charged for on the basis of the average of the readings actually recorded when the meter is put in.

(6) **Liability for the sums advanced under section 5.**—Government accept the Committee's recommendation that the total cost incurred for the preparation of their report should be apportioned between the Corporation of Calcutta and the Garden Reach Municipality in equal shares. The half share debitable to the Garden Reach Municipality shall be adjusted against the first annual payment of Rs. 2½ lakhs to be made by the Corporation to the Garden Reach Municipality.

(7) **Provision of initial funds.**—Under section 90A of the Calcutta Municipal Act, 1923, as inserted by section 4 of the Schedule to the Garden Reach Municipality Act, the Corporation shall pay an annual contribution of Rs. 2½ lakhs to the Garden Reach Municipality with retrospective effect from the 1st April 1932. This means that at the beginning of the year 1935-36 the Garden Reach Municipality will have to its credit a sum of Rs. 7½ lakhs, of which half would be reserved for expenditure on new works of improvement in the municipality and the other half would be available for its normal activities. Government are pleased to direct that the entire amount payable by the Corporation to the Garden Reach Municipality for the three years ending the 31st March 1935 shall be paid immediately on the 1st of April 1935. As 50 per cent. of this sum would be available for ordinary expenditure of the new municipality, Government consider that no provision for further initial funds is necessary.

(8) **Revival of Acts and notifications.**—*(i)* *Licensed Warehouse and Fire Brigade Act.*—This Act applies to Calcutta and such portion of the suburbs as are subject to Bengal Act II of 1866 (Calcutta Suburban Police Act) and to any other municipality in the neighbourhood of Calcutta to which it is extended.

The police jurisdiction in Garden Reach is divided between the Calcutta Police (police-station Garden Reach) and the Bengal Police (police-station Metiabruz). For the portion of Garden Reach within the jurisdiction of the Calcutta Police, no notification under the Licensed Warehouse and Fire Brigade Act is necessary. But for the portion outside, where there are godowns, the services of the Fire Brigade are equally necessary and for that reason the Notification No. 797 M., dated the 11th April 1912, was published. The Committee recommends that a notification should be published extending the Act to the area notified previously and that the notification should also include certain additional areas including the South India Jute Mills within the purview of the Act.

Government accept the Committee's recommendation and the necessary notification will be issued when the report stating the boundaries of

the area proposed to be notified is received from the Commissioner of the Presidency Division.

Government also accept the suggestion made by the Corporation that the incidence of the Fire Brigade Contribution payable by it should be revised and split up into two percentages—one for Calcutta and the other for Garden Reach.

(*ii*) *The Calcutta Hackney Carriage Act.*—Under section 82, the fees realized under the Act are apportioned between the Corporation and the municipalities included in Calcutta under section 2 (*b*) of the Act. By Notifictaion No. 1098 Pl., dated the 25th April 1921, the Garden Reach Municipality was included in Calcutta for this purpose. To enable the new municipality to get its share of the fund, so much of the notification as relates to Garden Reach will be republished.

(*iii*) *Cattle Trespass Act.*—Under a general notification the Commissioners of municipalities under the Bengal Municipal Act were vested with the powers of the District Magistrate under section 31 (*a*) of the Cattle Trespass Act and authorised to receive the proceeds of cattle pounds. As Garden Reach will be a new municipality, it will automatically come under the Bengal Municipal Act and no fresh notification is required.

(*iv*) *Bengal Motor Vehicles Tax Act, 1932.*—Under section 10 (*1*) of the Act, a sum of Rs. 4½ lakhs from the proceeds of the motor vehicles tax is payable annually to the Calcutta Corporation. The Committee recommends that when Garden Reach is separated from Calcutta the section should be amended to enable Garden Reach to obtain a share of this sum of Rs. 4½ lakhs.

When Garden Reach is constituted as a separate municipality it will be entitled under section 11 of the Motor Vehicles Tax Act to receive grants from the proceeds of the motor vehicles tax like other municipalities, and Government do not consider that any reduction of the statutory contribution payable to the Calcutta Corporation is necessary.

(*v*) *Cart Registration Fees.*—Government accept the Committee's recommendation that a notification under section 185 of Calcutta Municipal Act should be published declaring the Garden Reach Municipality to be entitled to a share of the proceeds of the Cart Registration Fees.

(*vi*) *Extension of some of the provisions of the Calcutta Municipal Act, 1923, to certain wards of the Garden Reach Municipality.*—As the Garden Reach area has, for the last ten years, been controlled by the Calcutta Municipal Act, the Committee considers that no relaxation of the regulations regarding buildings, bustees and streets should be permitted at any rate in the urban areas of the Garden Reach Municipality. It, therefore, recommends that these provisions of the Calcutta Municipal Act (*i.e.*, Chapters XX, XXI, and XXII of the Act) be extended, under section 541 of the Act, to the proposed wards I, II, III and IV of the Garden Reach Municipality simultaneously with its constitution.

Government accept the Committee's recommendation, but effect cannot be given to it until the Municipal Commissioners have *divided* the municipality into wards for administrative purposes.

(9) **Staff.**—The Committee recommends that for a period not exceeding six months after the constitution of the new municipality the staff

at present employed in the Garden Reach area should be retained. This will enable the Municipal Commissioners to examine the working of the staff and formulate a policy regarding the activities with which they are connected.

The Committee recommends that the employees of the Corporation who are taken over by the Garden Reach Municipality should retain all the privileges regarding scales of pay, provident fund and gratuities which they enjoy at present under the Corporation; that the Garden Reach Municipality should decide, within a period of six months, as suggested above, whether the retention of each member of the staff is necessary or desirable, or not; that such staff as are not engaged by the new municipality should be retained by the Calcutta Corporation by absorption in other departments, whenever possible, and that any member of the existing staff not retained either by the Garden Reach Municipality or by the Calcutta Corporation should be compensated at the expense of the Corporation.

The Committee further recommends that the employees of the Corporation who may be discharged in consequence of the separation of Garden Reach should be allowed the same concessions as if they had been discharged by the Corporation in order to reduce establishment, with this added concession that for the purpose of payment of provident fund and gratuities there should be no minimum time limit of service. Under the present rules of the Corporation, no employee is entitled to employer's contribution to provident fund if he voluntarily leaves the service within five years or to gratuity unless he has served for at least 15 years. The Committee recommends that there should be no minimum qualifying period of service for these concessions and that the amount of gratuity so admissible, where service of less than 15 years has been put in, should be a fraction of the sum ordinarily admissible represented by the number of actual years served divided by fifteen. The Committee further recommends that in calculating actual years of service, the period of service under the former Garden Reach Municipality should be taken into account according to the Rules for Gratuity framed under section 73 (*b*) of the Calcutta Municipal Act.

Government accept all the above recommendations with the modification that the entire responsibility for the payment of compensation to each discharged employee, on the terms recommended by the Committee, shall rest on the Garden Reach Municipality, and that no liability shall attach to the Corporation for reabsorbing such members of the staff as are discharged by the Garden Reach Municipality on grounds of inefficiency or otherwise.

(10) **Apportionment of arrears due to the Corporation other than those on account of rates, taxes and fees.**—Government accept the Committee's recommendation that all such arrears should be received by the Corporation as in the case of arrears of taxes, rates and fees under section 15 of the Act.

(11) **Movable property.**—The Committee's recommendations are as follows:—

All registers, documents and account books which concern the Garden Reach area exclusively should be made over to the Garden

Reach Municipality. If any documents, books or registers concern other areas besides Garden Reach and copies have to be made, the cost of copying should be borne equally by the Calcutta Corporation and the Garden Reach Municipality. The copying of all such papers should be completed within six months of the constitution of the new municipality and in the meantime the employees of the Garden Reach Municipality should have free access to records with which the Garden Reach Municipality and the Corporation are jointly concerned.

All water lorries and carts, conservancy carts, etc., and all other movable property, plant, material, or furniture, employed in the area of the Garden Reach Municipality on the 1st January 1933, should be made over to the Garden Reach Municipality, when constituted, free of cost. Similarly, all schools, dispensaries, maternity centres, milk kitchens, etc., should be made over to the Garden Reach Municipality as going concerns and with the equipment in their possession on 1st January 1933.

The trenching ground and a portion of the Trenching Ground Road which will fall outside the area of the Garden Reach Municipality should vest in the Commissioners of that municipality.

Under section 12(*2*) of the Act, all immovable property in Garden Reach area and all interests of whatever nature therein vested in the Corporation of Calcutta shall vest in the Commissioners of the Garden Reach Municipality. The trenching ground of the old Garden Reach Municipality situated in mauza Alampur (J.L. No. 5 of police-station Metiabruz comprising plots Nos. 570-582 and 584) and the Trenching Ground Road in mauza Ramdashhati (J.L. No. 4 of police-station Metiabruz comprising plots Nos. 852 and 939) have been recorded in the name of the Corporation of Calcutta in the settlement records. The trenching ground and a portion of the Trenching Ground Road are outside the limit of both the Garden Reach Municipality and the Corporation of Calcutta, *i.e.*, in villages Alampur and Ramdashhati within a Union Board area. This cannot, therefore, properly be vested in the Commissioners of the Garden Reach Municipality under section 12(*2*) of the Act. The Committee, therefore, recommends that all rights and interests in the trenching ground and the road as described above should be vested in the Commissioners of the Garden Reach Municipality by an order under section 20 of the Act.

Government accept all the recommendations of the Committee mentioned above, except that as stated in paragraph 2(*5*)(*ii*) of this resolution, the motor lorries and other appliances for water-supply, except the water-boat will be made over to the Garden Reach Municipality after the Garden Reach main has been laid. Government are also pleased to direct, under section 20 of the Act, that all rights and interests in the trenching ground and the road shall vest in the Commissioners of the Garden Reach Municipality.

(12) **Budget for the year 1935-36 and other preliminary arrangements.**—Under section 20 of the Garden Reach Municipality Act, Government are pleased to direct that the Commissioners of the Garden Reach Municipality may at an informal meeting, held as soon as possible, after the publication of the notifications under sections 8 and 9 of the Act, prepare in detail estimates showing the probable receipts and expenditure during the year 1935-36 and the objects in respect

of which it is proposed to incur such expenditure; the Municipal Commissioners may also at the same meeting consider and make such preliminary arrangements, as may be necessary, for the collection of taxes, *e.g.*, by printing rate bills, etc., and for other matters relating to the working of the municipality. The estimates and other arrangements adopted at such meeting shall be sanctioned by the Commissioners as soon after the constitution of the municipality as possible.

Ordered that the above resolution be published in the *Calcutta Gazette*.

By order of the Government of Bengal
(Ministry of Local Self-Government),

G. S. DUTT,
Secretary to the Government of Bengal.

APPENDIX A.

(1) *Population of Garden Reach in 1941.*—In 1921, the population of Garden Reach was 45,567. The Moore-Bateman scheme anticipates a population of 78,000 in 1941 (70 per cent. increase). This figure is not likely to be reached, since the increase in 1931 (census) was only 20 per cent. (55,872). Under normal conditions the population of Garden Reach is likely to increase by another 20 per cent. to about 66,000 in 1941.

(2) *Population of Calcutta (excluding added areas) in 1941.*—The population of Calcutta proper increased from 908,000 to one million in 1931 (census). This gives an increase of about 92,000, *i.e.*, by 10 per cent. If this rate of increase is maintained during the next ten years, it is likely that the population of Calcutta would go up to about 1,100,000 in 1941, whereas the Moore-Bateman scheme assumes that Calcutta proper would have a population of only 1,047,000 in that year.

(3) A comparative statement of (*a*) the population of Calcutta and added areas in 1941 as given in the Moore-Bateman scheme and (*b*) that of Calcutta and added areas, excluding the new Garden Reach Municipality, based on the above calculations is given below:—

(*a*) Moore-Bateman scheme—

Calcutta Districts, I to IV	1,047,000
Manicktola	118,000
Cossipore-Chitpore	79,000
Garden Reach	78,000
Total	1,322,000

(*b*) Estimated—

Calcutta Districts, I to IV	1,100,000
Manicktola	118,000
Cossipore-Chitpore	79,000
Dock area and Port Commissioners' properties (*i.e.*, one-third of the population of Garden Reach in 1941) ..	22,000
Total ..	1,319,000

Printed and published by the Superintendent, Government Printing, Bengal Government Press, Alipore, Bengal, on the 7th February 1935.

Registered No. C207

The Calcutta Gazette

Extraordinary

Published by Authority

THURSDAY, FEBRUARY 7, 1935.

Orders by His Excellency the Governor of Bengal.

No. 1302A.—7th February 1935.—Whereas in notification No. 561A., dated the 22nd January 1935, the Presidency and Burdwan (European) constituency of the Bengal Legislative Council was called upon, in accordance with sub-rule (*1*) of rule 26 of the Bengal Electoral Rules, to elect a member before the 23rd March 1935;

And whereas no person has been duly nominated for election;

Now, therefore, in pursuance of sub-rule (*3*) of rule 14 of the Bengal Electoral Rules, His Excellency the Governor is pleased to call upon the said constituency to elect a member in accordance with the said rules before the 19th March 1935.

E. N. Blandy,
Chief Secy. to the Govt. of Bengal (offg.).

GOVERNMENT OF BENGAL.

Appointment Department.

NOTIFICATION.

No. 1304A.—7th February 1935.—With reference to notification No. 1302A., dated the 7th February 1935, and in exercise of the powers conferred by clauses (*a*) and (*b*) of sub-rule (*2*) of rule 11 of the Bengal Electoral Rules, and in pursuance of sub-rule (*3*) of that rule, the Governor in Council is pleased to prescribe for the Presidency and Burdwan (European) constituency of the Bengal Legislative Council the 12th February 1935 as the date for the nomination of candidates and for the delivery of nomination papers to the Returning Officer and the 13th February 1935 as the date on which the scrutiny of nominations shall be held.

E. N. Blandy,
Chief Secy. to the Govt. of Bengal (offg.).

Printed and published by the Superintendent, Government Printing, Bengal Government Press, Alipore, Bengal, on the 7th February 1935.

Registered No. C207

No. 7 of 1935

The Calcutta Gazette

Published by Authority

THURSDAY, FEBRUARY 14, 1935.

CONTENTS:

	Page.
PART I.—Orders and Notifications by the Governor of Bengal, the Government of Bengal, the High Court, Government Treasury, etc.	323—349
PART IA.—Orders and Notifications by the Government of India republished for general information	23—24
PART IB.—Educational Notices ..	307—334
PART II.—Advertisements	129—140
PART III.—Acts of the Bengal Legislative Council	*Nil*
PART IV.—Bills introduced in the Bengal Legislative Council, Reports of Select Committees presented or to be presented to that Council, and Bills published before introduction in that Council—	
The Bengal Development Bill, 1935, with Statement of Objects and Reasons and Notes on Clauses. ..	37—51
PART V.—Acts of the Indian Legislature assented to by the Governor-General and Ordinances promulgated under section 72 of the Government of India Act ..	*Nil*
PART VI.—Bills introduced in the Council of State and Legislative Assembly, Reports of Select Committees presented to the Council and Assembly and Bills published under rule 18 of the Indian Legislative Rules	*Nil*
SUPPLEMENT No. 7 :—	
Third and Final Report on the Winter Rice Crop of Bengal, 1934-35 ..	253—256
Final Report on the Cotton Crops of Bengal, 1934-35	256—257
Weekly gauge readings—Cotton Ginning and Pressing—Weekly Weather and Crop Report—Prices-current—Corporation of Calcutta Notices—Weekly Vital Statistics	258—277

PART I

Orders and Notifications by the Governor of Bengal, the Government of Bengal, the High Court, Government Treasury, etc.

Orders by His Excellency the Governor of Bengal.

No. 1445A.—9th February 1935.—Under the provisions of section 93 of the Government of India Act, His Excellency the Governor is pleased to accept the resignation tendered by Mr. Herbert Daniel Benjamin, I.C.S., of his office of member of the Bengal Legislative Council.

No. 1448A.—9th February 1935.—In exercise of the powers conferred by rule 26 (2) of the Bengal Electoral Rules, His Excellency the Governor is pleased to nominate Mr. Ronald Leslie Walker, I.C.S., an official, to be a member of the Bengal Legislative Council.

No. 1452A.—9th February 1935.—In exercise of the power conferred on him under clause (*b*) of sub-section (2) of section 72A of the Government of India Act, His Excellency the Governor hereby nominates Mr. C. W. Gurner, I.C.S., to be a member of the Bengal Legislative Council for the purpose of the Albert Victor Leper Hospital Bill, 1934, with effect from this date until the conclusion of proceedings in relation to this Bill.

No. 1495A.—12th February 1935.—Under the provisions of section 93 of the Government of India Act, His Excellency the Governor is pleased to accept the resignation tendered by Mr. H. H. Burn of his office of member of the Bengal Legislative Council.

No. 1498A. — 12th February 1935. — Whereas a vacancy has occurred in the Bengal Chamber of Commerce constituency of the Bengal Legislative Council by reason of the resignation by Mr. H. H. Burn, His Excellency the Governor is pleased, in pursuance of sub-rule (*1*) of rule 26 of the Bengal Electoral Rules, to call upon the said constituency to elect a person for the purpose of filling the vacancy by the 5th March 1935.

E. N. BLANDY,

Chief Secy. to the Govt. of Bengal (offg.).

Orders by the Government of Bengal.

No. 1473A.

Appointments and Transfers.

GENERAL.

24-Parganas.—No. 1164A.—4th February 1935.—Maulvi Lehazuddin Ahmad, Deputy Magistrate and Deputy Collector, on leave, is posted to the headquarters station of the 24-Parganas district.

Rajshahi Divn.—No. 1174A.—4th February 1935.—Maulvi Kafiluddin Ahmad, Sub-Deputy Collector, on leave, is posted to the Rajshahi Division.

Chittagong Divn.—No. 1178A.—4th February 1935.—Maulvi Saiyid Abbas Ali, Sub-Deputy Collector, on leave, is posted to the Chittagong Division.

Burdwan Divn.—No. 1182A.—4th February 1935.—Babu Ashutosh Das Gupta, Sub-Deputy Collector, on leave, is posted to the Burdwan Division.

Jessore-Faridpur.—No. 1210A.—4th February 1935.—Babu Raman Chandra Banarji, officiating Additional District and Sessions Judge, Jessore, is appointed temporarily to act as Additional District and Sessions Judge, Faridpur.

Howrah.—No. 1246A.—6th February 1935.—Rai Suresh Chandra Sinha Bahadur, on leave, is appointed to be Magistrate and Collector, Howrah.

Faridpur. — No. 1276A. — 6th February 1935.—Babu Kunja Bihari Ray, officiating Additional District and Sessions Judge, Faridpur, is appointed temporarily to act as District and Sessions Judge of that district.

Midnapore. — No. 1421A.—7th February 1935.—Mr. T. J. Y. Roxburgh, C.I.E., I.C.S., is appointed to be District and Sessions Judge, Midnapore.

POLICE.

Hooghly - Howrah. — No. 1229A. — 5th February 1935.—Babu Basudeb Kabiraj, Inspector of Police, Hooghly, is appointed to act as Deputy Superintendent of Police and is posted to the headquarters station of the Howrah district.

Midnapore - Murshidabad. — No. 1230A.—5th February 1935.—Maulvi Muzaffar Ali Khan, Inspector of Police, Midnapore, is appointed to act as Deputy Superintendent of Police and is posted to the headquarters station of the Murshidabad district.

Leave.

GENERAL.

No. 1168A.—4th February 1935.—Maulvi Lehazuddin Ahmad, Deputy Magistrate and Deputy Collector, is allowed leave on average pay for one month, under the proviso to rule 81 (*b*) (*ii*) of the Fundamental Rules, in extension of the leave granted to him under the orders of the 24th November 1934.

No. 1195A.—4th February 1935.—Babu Gopendra Kumar Ghosh Chaudhuri, Deputy Magistrate and Deputy Collector, is allowed leave on average pay for three months, under the proviso to rule 81 (*b*) (*ii*) of the Fundamental Rules, in extension of the leave granted to him under the orders of the 29th September 1934.

Howrah.—No. 1242A.—6th February 1935.—Mr. L. G. Durno, I.C.S., Magistrate and Collector, Howrah, is allowed leave on average pay for eight months, under rule 81 (*b*) (*i*) of the Fundamental Rules, with effect from the 2nd March 1935, or any subsequent date on which he may be relieved.

Bakarganj. — No. 1428A.—8th February 1935.—Babu Sharat Kumar Guha, Deputy Magistrate and Deputy Collector, Bakarganj, is allowed leave on average pay for four months, under rule 81 (*b*) (*ii*) of the Fundamental Rules, with effect from the 2nd January 1935.

No. 1458A.—9th February 1935.—Babu Dinesh Chandra Gupta, Deputy Magistrate and Deputy Collector, employed as Personal Assistant to the Director of Land Records, Bengal, is allowed leave on average pay up to the 13th June 1935, under rule 81 (*b*) (*ii*) of the Fundamental Rules, with effect from the 24th February 1935, or any subsequent date on which he may be relieved.

POLICE.

Dacca.—No. 1290A.—7th February 1935.—Rai Manmatha Nath Mukharji Bahadur, Deputy Superintendent of Police, Dacca, is allowed leave on average pay up to the 30th June 1935, under rule 81 (*b*) (*ii*) of the Fundamental Rules, with effect from the 1st March 1935, or any subsequent date on which he may be relieved.

24-Parganas.—No. 1293A.—7th February 1935.—Mr. L. N. Bavin, I.P., Superintendent of Police, 24-Parganas, is allowed leave for eighteen months, viz., leave on average pay for two months and six days, under rule 81 (*b*) (*i*) of the Fundamental Rules, with effect from the 9th March 1935, or any subsequent date on which he may be relieved, and leave on half average pay for the remaining period, under rule 81 (*d*) of those rules.

Rajshahi. — No. 1296A. — 7th February 1935.—Mr. F. P. Walker, I.P., Deputy Inspector-General of Police, Rajshahi Range, is allowed leave for twenty-eight months, viz., leave on average pay for five months and twenty-seven days, under rule 81 (*b*) (*i*) of the Fundamental Rules, with effect from the 14th March 1935, or any subsequent date on which he may be relieved, and leave on half average pay for the remaining period, under rule 81 (*d*) of those rules.

24-Parganas.—No. 1299A.—7th February 1935.—Mr. A. W. Shallow, I.P., Superintendent of Police, Eastern Bengal Railway, Sealdah, is allowed leave on average pay for eight months, under rule 81 (*b*) (*i*) of the Fundamental Rules, with effect from the 7th March 1935, or any subsequent date on which he may be relieved.

ECCLESIASTICAL.

Darjeeling. — No. 1272A.—6th February 1935.—In modification of the orders of the 12th November 1934, the Reverend Canon C. G. Pearson, Chaplain of Darjeeling, is allowed leave on average pay, under rule 81 (*b*) (*i*) of the Fundamental Rules, from the 5th November 1934 to the 11th March 1935, inclusive.

E. N. BLANDY,
Chief Secy. to the Govt. of Bengal (offg.).

NOTIFICATION.

No. 1500A. — 12th February 1935. — Whereas by notification No. 1498A., dated the 12th February 1935, His Excellency the Governor has been pleased to call upon the Bengal Chamber of Commerce constituency of the Bengal Legislative Council to elect a member to the said Council in place of Mr. H. H. Burn, resigned:

Now, therefore, the Governor in Council is pleased, in exercise of the powers conferred by clauses (*a*) and (*b*) of sub-rule (*2*) of rule 11 of the Bengal Electoral Rules, and in pursuance of sub-rule (*3*) of that rule, to prescribe the 18th February 1935 as the date for the nomination of candidates and for the delivery of nomination papers to the Returning Officer and the 19th February 1935 as the date on which the scrutiny of nominations shall be held.

E. N. BLANDY,
Chief Secy. to the Govt. of Bengal (offg.).

POLITICAL DEPARTMENT.

Political.

NOTIFICATIONS.

No. 1482P.—11th February 1935.—In exercise of the power conferred by section 24 of the Bengal Suppression of Terrorist Outrages Act, 1932 (Ben. Act XII of 1932), the Governor in Council is pleased to invest with the powers of a Special Magistrate under the said Act the following Magistrates of the first class, namely:—

(1) Mr. K. G. Murshed, I.C.S., Additional District Magistrate, Chittagong.
(2) Khan Sahib Muhammad Raziuddin Ali, Additional Sadar Subdivisional Magistrate, Tippera.
(3) Babu Sushil Kumar Mukherji, Sadar Subdivisional Magistrate, Midnapore.
(4) Babu Digendra Nath Saha, Subdivisional Magistrate, Ghatal, Midnapore.
(5) Babu Bimal Chandra Sinha, Sadar Subdivisional Magistrate, Burdwan.
(6) Rai Nepal Chandra Sen Bahadur, Subdivisional Magistrate, Uluberia, Howrah.
(7) Babu Charu Chandra Gupta, Sadar Subdivisional Magistrate, Nadia.
(8) Rai Sahib Bhabesh Chandra Roy, Sadar Subdivisional Magistrate, Dinajpur.
(9) Maulvi Muhammad Mahtabuddin Sarkar, Deputy Magistrate, Netrokona, Mymensingh.
(10) Maulvi Mazharul Islam, Subdivisional Magistrate, Dakshin Shahbazpur, Bakarganj.
(11) Maulvi Abdus Sobhan Mahmud, Subdivisional Magistrate, Pirojpur, Bakarganj.

No. 1483P. — 11th February 1935. — In exercise of the power conferred by sub-section (*1*) of section 25 of the Bengal Suppression of Terrorist Outrages Act, 1932 (Ben. Act XII of 1932), the Governor in Council is pleased to empower the following District Magistrates to exercise within their respective districts the powers specified in sub-section (*1*) of section 25 of the said Act:—

(1) The District Magistrate, Burdwan.
(2) The District Magistrate, Midnapore.
(3) The District Magistrate, Hooghly.
(4) The District Magistrate, Howrah.
(5) The District Magistrate, Birbhum.
(6) The District Magistrate, Bankura.
(7) The District Magistrate, 24-Parganas.
(8) The District Magistrate, Nadia.
(9) The District Magistrate, Murshidabad.
(10) The District Magistrate, Jessore.
(11) The District Magistrate, Khulna.
(12) The District Magistrate, Faridpur.
(13) The District Magistrate, Bakarganj.
(14) The District Magistrate, Tippera.
(15) The District Magistrate, Noakhali.
(16) The District Magistrate, Rajshahi.
(17) The District Magistrate, Dinajpur.
(18) The District Magistrate, Rangpur.
(19) The District Magistrate, Bogra.
(20) The District Magistrate, Pabna.
(21) The District Magistrate, Malda.
(22) The Deputy Commissioner, Jalpaiguri.

E. N. BLANDY,
Chief Secy. to the Govt. of Bengal (offg.).

Jails.

Orders by the Inspector-General of Prisons, Bengal.

No. 2621.—5th February 1935.—Rai Sahib Jnanendra Chandra Guha, B.A., Personal Assistant to Inspector-General of Prisons, Bengal, made over charge of his office to Maulvi Kazi Abdul Moujud, M.A., on the afternoon of the 5th February 1935.

No. 2623.—7th February 1935.—Dr. K. C. Sen Gupta made over charge of the Chittagong Jail to Lt.-Col. P. Banerji, I.M.S., on the forenoon of the 15th January 1935.

M. A. SINGH, LT.-COL., I.M.S.,
for *Inspector-General of Prisons, Bengal.*

POLICE DEPARTMENT.

NOTIFICATION.

Howrah.—No. 823Pl.—11th February 1935.—In exercise of the power conferred by section 58 of the Village Chaukidari Act, 1870 (Bengal Act VI of 1870), the Governor in Council is pleased to appoint the undermentioned Assistant Settlement Officers of Howrah to be Commissioners to ascertain and determine the chaukidari chakran lands and other lands in the district of Howrah before the passing of the said Act assigned for the maintenance of officers to keep watch and to report crime to the Police:—

Babu Charu Chandra Sen, Deputy Collector.

Babu Satya Charan Bhattacharji, Deputy Collector.

E. N. BLANDY,
Chief Secy. to the Govt. of Bengal (offg.).

JUDICIAL DEPARTMENT.

No. 1474A.

Powers.

Bakarganj.—No. 1190A. — 4th February 1935.—In exercise of the power conferred by sub-section (*1*) of section 5 of the Bengal Borstal Schools Act, 1928 (Bengal Act I of 1928), the Governor in Council is pleased to invest the Deputy Magistrates named below with the powers necessary for carrying out the purposes of the said section:—

Babu Pinaki Ranjan Sinha, Deputy Magistrate, Pirojpur, Bakarganj.

Babu Bhupendra Krishna Sinha, Deputy Magistrate, Patuakhali, Bakarganj.

Maulvi Abdul Latif, Deputy Magistrate, Dakshin Shahbazpur, Bakarganj.

Hooghly.—No. 1237A.—6th February 1935.—Babu Praphulla Chandra Mitra, Sub-Deputy Magistrate, Hooghly, is vested with the powers of a Magistrate of the second class.

Dinajpur-Rangpur-Darjeeling.—No. 1432A.—8th February 1935.—The Deputy Magistrates, on probation, named below, are vested with the powers of a Magistrate of the first class:—

Maulvi Naziruddin Ahmad, Dinajpur.

Babu Hem Chandra Sen, Rangpur.

Babu Satya Charan Haldar, Rangpur.

Babu Matichand Pradhan, Darjeeling.

E. N. BLANDY,
Chief Secy. to the Govt. of Bengal (offg.).

Appointments and Transfers.

Calcutta.—No. 984J.—4th February 1935.—In exercise of the power conferred by section 18 of the Code of Criminal Procedure, 1898 (Act V of 1898), the Governor in Council is pleased to appoint each of the gentlemen named below to be a Presidency Magistrate in Calcutta for a period of three years from the 3rd March 1935 and to empower him to sit singly as a Presidency Magistrate:—

Rai Kashiswar Chakrabatti Bahadur.

Mr. I. H. Cohen.

Mr. A. C. Snow.

Maulvi Muhammad Rafique.

Maulvi Ebrahim Kasim Modan.

Nadia.—No. 1006J.—6th February 1935.—Babu Janardan Prasad Mukharji, munsif of Krishnagar, in the district of Nadia, is appointed temporarily to be a munsif in the said district, to be ordinarily stationed at Ranaghat, during the absence, on leave, of Babu Dwijendra Nath Pal, granted leave.

24-Parganas. — No. 1045J.—6th February 1935.—In exercise of the powers conferred by sections 14 and 15 and the proviso to section 357 of the Code of Criminal Procedure, 1898 (Act V of 1898), the Governor in Council is pleased—

(*a*) to confer upon Khan Bahadur Saiyid Moshfequs Saleheen the powers of a Magistrate of the second class, in the district of the 24-Parganas, for a period of three years from the 1st March 1935, in respect to such cases as may be made over to him within the limits of the Barrackpore subdivision of the said district,

(*b*) to direct that he shall, in addition to sitting singly, sit as a member of the Titagarh bench in the said district, and

(*c*) to direct him to take down evidence in the English language.

Hooghly. — No. 1062J. — 7th February 1935.—In exercise of the powers conferred by sections 14 and 15 and the proviso to section 357 of the Code of Criminal Procedure, 1898 (Act V of 1898), the Governor in Council is pleased—

(*a*) to confer upon Babu Akshay Kumar Mukharji the powers of a Magistrate of the third class, in the district of Hooghly, for a period of three years from the 12th March 1935,

(*b*) to direct him to sit as a member of the Bhadreswar bench in the said district, and

(*c*) to direct him to take down evidence in the English language.

24-Parganas.—No. 1064J.—7th February 1935.—In exercise of the powers conferred by sections 14 and 15 and the proviso to section 357 of the Code of Criminal Procedure, 1898 (Act V of 1898), the Governor in Council is pleased—

(*a*) to confer upon Maulvi Bazlur Rahaman the powers of a Magistrate of the second class, in the district of the 24-Parganas, for a period of three years from the 19th February 1935, in respect to such cases as may be made over to him within the limits of the Sadar subdivision of the said district,

(*b*) to direct that he shall, in addition to sitting singly, sit as a member of the Alipore bench in the said district, and

(*c*) to direct him to take down evidence in the English language.

Khulna-Tippera.—No. 1066J.—7th February 1935.—Mr. Phanindra Mohan Lahiri, officiating munsif of Khulna (Sadar), is appointed to act, until further orders, as a munsif in the district of Tippera, to be ordinarily stationed at Comilla, *vice* Babu Dhirendra Nath Guha.

Chittagong.—No. 1081J. — 7th February 1935.—In exercise of the powers conferred by sections 14 and 15 and the proviso to section 357 of the Code of Criminal Procedure, 1898 (Act V of 1898), the Governor in Council is pleased—

(*a*) to confer upon Reverend Alexander Sarat Chandra Seine the powers of a Magistrate of the second class, in the district of Chittagong, for a period of three years from the 27th February 1935, in respect to such cases as may be made over to him within the limits of the Sadar subdivision of the said district,

(*b*) to direct that he shall, in addition to sitting singly, sit as a member of the Sadar bench in the said district, and

(*c*) to direct him to take down evidence in the English language.

Bakarganj.—No. 1084J. — 7th February 1935.—Babu Surendra Chandra Basu, munsif of Barisal, in the district of Bakarganj, is appointed temporarily to act as Subordinate Judge of Bakarganj, *vice* Babu Bisweswar Mazumdar.

Bankura-Bakarganj.—No. 1086J.—7th February 1935.—Babu Santosh Kumar Ray, officiating munsif of Bishnupur, in the district of Bankura, is appointed to act, until further orders, as a munsif in the district of Bakarganj, to be ordinarily stationed at Barisal, *vice* Babu Surendra Chandra Basu.

Jessore-Khulna.—No. 1110J.—7th February 1935.—Babu Ram Lal Banarji, officiating Subordinate Judge, on leave, is appointed to act, until further orders, as Additional Subordinate Judge, Jessore and Khulna, for the present to be employed at Khulna.

Leave.

Calcutta. — No. 1008J. — 6th February 1935.—Mr. Mowdudur Rahman, Bar.-at-Law, Judge, Court of Small Causes, Calcutta, is allowed leave on average pay for one month and fourteen days from the 17th January 1935, under rules 81 (*b*) (*ii*) and 82 (*b*) of the Fundamental Rules.

Resignation.

Bakarganj. — No. 1004J.—6th February 1935.—The Governor in Council is pleased to accept the resignation tendered by Babu Hari Mohan Basu of his appointment as an Honorary Magistrate at Jhalakati in the district of Bakarganj.

NOTIFICATIONS.

Faridpur.—No. 1058J.—6th February 1935. —In exercise of the power conferred by section 65 of the Bengal Village Self-Government Act, 1919 (Bengal Act V of 1919), the Governor in Council is pleased to appoint the following members of the Amtali union board within the Kotwalipara police-station in the Gopalganj subdivision of the Faridpur district, to be, during their term of office as such members, members of the union bench within the jurisdiction of the said union board for the purposes of that section:—

Babu Ananda Chandra Adhikari.

Munshi Nesaraddin.

Faridpur.—No. 1059J.—6th February 1935. —In exercise of the power conferred by section 73 of the Bengal Village Self-Government Act, 1919 (Bengal Act V of 1919), the Governor in Council is pleased to appoint the following members of the Amtali union board within the Kotwalipara police-station in the Gopalganj subdivision of the Faridpur district, to be, during their term of office as such members, members of the union court within the jurisdiction of the said union board for the purposes of that section:—

Babu Ananda Chandra Adhikari.

Munshi Nesaraddin.

Jessore.—No. 1121J.—9th February 1935.—In exercise of the power conferred by section 65 of the Bengal Village Self-Government Act, 1919 (Bengal Act V of 1919), the Governor in Council is pleased to appoint the following members of the Benda union board within the Naraganti police-station in the Narail subdivision of the Jessore district, to be, during their term of office as such members, a union bench within the jurisdiction of the said union board for the purposes of that section:—

Babu Provash Chandra Das Gupta.

Babu Pramode Kumar Das Gupta.

Babu Nagendra Nath Sen.

Munshi Mojaharal Huq Shekh.

Jessore.—No. 1122J.—9th February 1935.—In exercise of the power conferred by section 73 of the Bengal Village Self-Government Act, 1919 (Bengal Act V of 1919), the Governor in Council is pleased to appoint the following members of the Benda union board within the Naraganti police-station in the Narail subdivision of the Jessore district, to be, during their term of office as such members, a union court within the jurisdiction of the said union board for the purposes of that section:—

Babu Provash Chandra Das Gupta.

Babu Pramode Kumar Das Gupta.

Babu Nagendra Nath Sen.

Munshi Mojaharal Huq Shekh.

Dacca.—No. 1124J.—9th February 1935.—In exercise of the power conferred by section 65 of the Bengal Village Self-Government Act, 1919 (Bengal Act V of 1919), the Governor in Council is pleased to appoint Dr. Muhammad Hossain, a member of the Toke union board within the Kapasia police-station in the Sadar (North) subdivision of the Dacca district, to be, during his term of office as such member, a member of the union bench within the jurisdiction of the said union board for the purposes of that section, *vice* Munshi Basiruddin Bepari, deceased.

Dacca.—No. 1125J.—9th February 1935.—In exercise of the power conferred by section 73 of the Bengal Village Self-Government Act, 1919 (Bengal Act V of 1919), the Governor in Council is pleased to appoint Dr. Muhammad Hossain, a member of the Toke union board within the Kapasia police-station in the Sadar (North) subdivision of the Dacca district, to be, during his term of office as such member, a member of the union court within the jurisdiction of the said union board for the purposes of that section, *vice* Munshi Basiruddin Bepari, deceased.

N. G. A. EDGLEY,
Secy. to the Govt. of Bengal.

LOCAL SELF-GOVERNMENT DEPARTMENT.

NOTIFICATIONS.

Minister-in-charge: The Hon'ble Sir Bijoy Prasad Singh Roy, Kt.

Calcutta.—No. 900M.—5th February 1935.—In exercise of the power conferred by clause (*h*) of sub-section (*2*) of section 123G of the Calcutta Municipal Act, 1923 (Bengal Act III of 1923), the Government of Bengal (Ministry of Local Self-Government) are pleased to make the following rules:—

Rules.

1. When any motion or resolution relating, directly or indirectly, to expenditure from the funds of the Corporation, is adopted or passed at a meeting of the Corporation or any Committee thereof, after a poll has been demanded and votes taken, the names of persons voting for and against such motion or resolution, together with the names of those who abstain from voting, shall be recorded in the minutes and proceedings.

2. When any such motion is adopted or passed without a poll being demanded, the name of any person—

(*a*) who opposes the motion or resolution, or who abstains from voting thereon, shall, if he so demands at the meeting in question or at any time before the confirmation of the minutes or proceedings of that meeting, or

(*b*) who is absent from the meeting in question, shall, if he so demands at any time before the confirmation of the minutes or proceedings of that meeting,

be recorded in the minutes or proceedings in such manner as to show that he so opposed, abstained or was absent, as the case may be; and any name so recorded shall be announced at any subsequent meeting at which the minutes or proceedings come up for confirmation.

No. 982M.—6th February 1935.—In exercise of the power conferred by clause (*iv*) of section 448 of the Bengal Municipal Act, 1932 (Bengal Act XV of 1932), the Government of Bengal (Ministry of Local Self-Government) are pleased to make the following amendments in the rules published with notification No. 4290M., dated the 15th September 1934:—

Amendments.

After rule 12 *add* the following new rules:—

"12A. (*1*) When an application, signed in the presence of two witnesses attesting the signature, is made by any person authorized to give notice of a birth or death, alleging an error in substance in any entry of a birth or

death in a register, the Health Officer, Sanitary Inspector or other officer appointed by the Commissioners at a meeting for the purpose, as the case may be, shall forward it to the Chairman or Vice-Chairman for orders as to whether the entry should be corrected. When the Chairman or Vice-Chairman has, after proper enquiry, issued an order in writing, accepting the application, the officer in charge of the register shall correct the error by making an entry in the margin, without any alteration of the original entry, and shall sign the marginal entry and add thereto the date of correction as well as the date of the order for correction.

(*2*) An appeal against an order of the Chairman or Vice-Chairman under this rule, refusing to correct an alleged error in an entry in a register, shall lie to the Magistrate of the district, who may, in his discretion, either confirm the order of the Chairman or Vice-Chairman, or direct the correction of the error.

12B. Without the special sanction in writing of the Magistrate of the district, an application for the correction of an entry in a register of births or deaths shall not be entertained after the expiry of three months from the date on which the notice of the birth or death to which the entry relates was given."

No. 989L.S.-G.—6th February 1935.—The following draft of amendment, which in exercise of the powers conferred by clauses (*a*) and (*b*) of sub-section (*2*) of section 101 of the Bengal Village Self-Government Act, 1919 (Bengal Act V of 1919), the Government of Bengal (Ministry of Local Self-Government) propose to make in the rules published with notification No. 630 T. L.S.-G., dated the 13th October 1919. as subsequently amended, is published for the information of persons likely to be affected thereby.

2. The draft will be taken into consideration on or after the 15th April 1935, and any objections or suggestions with respect thereto received by the undersigned through the District Officers before that date will be duly considered :—

Draft amendment.

In rule 31 of the said rules, after the words and figures "convening it under rule 29" *insert* the following :—

"Any member present may propose his own name or that of another member as a candidate for the office of President. But no candidature shall be taken into consideration unless it has been seconded by a member other than the proposer."

Medical.

Minister-in-charge: The Hon'ble Sir Bijoy Prasad Singh Roy, Kt.

Calcutta. — No. 406Medl.—5th February 1935.—The term of appointment of Dr. M. Abdul Majed, D.T.M., D.P.H. (Cal.), to act as Superintendent, Bengal Vaccine Depot, Calcutta, sanctioned in notification No. 357Medl., dated the 15th February 1934, is extended till 31st March 1936.

Calcutta. — No. 425Medl.—5th February 1935.—Dr. Hari Prosad Choudhuri, M.B. (Cal.), D.P.H. (Lond.), D.T.M. & H. (Lond.), D.O.M.S. (Lond.), F.R.S.S. (Lond.), is appointed temporarily to act as Assistant Professor of Entomology, School of Tropical Medicine, Calcutta, *vice* Dr. Dhirendra Nath Roy, granted leave in this department notification No. 2884Medl., dated the 14th September 1934.

Calcutta. — No. 430Medl.—6th February 1935.—Dr. Sukumar Bhattacharyya, a Demonstrator of Physiology, Medical College, Calcutta, is granted earned leave for the period from the 3rd January 1935 to the 2nd February 1935, under rule 10 of the Bengal Services (Revision of Leave) Rules, 1934.

Calcutta. — No. 458Medl.—7th February 1935.—Dr. C. D. Torpy, I.M.D., is appointed as a House Surgeon, Presidency General Hospital, Calcutta, with effect from the 24th October 1934.

NOTIFICATIONS.

Darjeeling.—No. 491Medl.—11th February 1935.—The Governor in Council is pleased to make the following amendment in the schedule annexed to paragraph 9 of the Statutes of the State Medical Faculty of Bengal, published under this department notification No. 424-Medl., dated the 2nd March 1915, as subsequently amended, viz.—

Insert the following in paragraph 10 of Appendix D relating to examination for a Junior Certificate in Nursing :—

The Victoria Hospital, Darjeeling (the training is limited to four candidates per year).

2. Notification No. 36T. Medl., dated the 20th April 1929, is hereby cancelled.

No. 479Medl.—11th February 1935.—The following draft of amendments, which, in exercise of the power conferred by sub-section (*1*) of section 33 and clauses (*b*), (*c*) and (*d*) of sub-section (*2*) of section 33 of the Bengal Medical Act, 1914 (Bengal Act VI of 1914), the Governor in Council propose to make in replacement of the rules and forms published with notification No. 933Medl., dated the 30th April 1915, is published for the informations of persons likely to be affected thereby.

2. The draft will be taken into consideration on or after the 15th of April 1935, and any objection or suggestion received by the undersigned before that date will be duly considered :—

Draft amendments.

1. For existing rules 25 to 48, *substitute* the following :—

Rules under clause (b) of sub-section (2) of section 33 of the Act.

Form of the Register of Registered Practitioners.

1. The Register of Registered Practitioners shall be maintained in Form No. IV in the Appendix to these rules.

2. The names shall be entered in the Register in the order in which the applications are admitted and sufficient space shall be left for future additions or alterations in the qualifications and address of each entry.

3. Each page of the Register shall be verified by the Registrar's signature.

Rules under clause (c) of sub-section (2) of section 33 of the Act.

Application of fees.

4. The Registrar shall receive all fees payable under the Act and shall credit them to the account of the Council in the Imperial Bank of India.

Rules under clause (d)(i) of sub-section (2) of section 33 of the Act.

Procedure to be followed in conducting any enquiry referred to in proviso (b) to section 17 and clause (a) of section 25 of the Act.

5. Whenever information is received that a Medical Practitioner, who is an applicant for registration, or whose name has already been registered, has been guilty of conduct which *primâ facie* constitutes infamous conduct in a professional respect, the Registrar shall make an abstract of such information and of such further informations he may have subsequently obtained.

6. Where the information in question is in the nature of a complaint by a person or body charging the Practitioner with infamous conduct in a professional respect, such complaint shall be made in writing addressed to the Registrar, and shall state the grounds of complaint and shall be accompanied by one or more declarations as to the facts of the case except when the complaint is by a Government Department.

7. Every declaration must state the description and true place of abode of the declarant, and where the fact stated in a declaration is not within the personal knowledge of the declarant, the source of the information and grounds for the belief of the declarant in its truth must be accurately and fully stated.

8. (*1*) The abstract and all other documents bearing on the case together with any complaint that may have been lodged shall be submitted by the Registrar to the President, who shall, if he thinks fit, instruct the Registrar to ask the Practitioner by means of a registered letter for an explanation within a time to be fixed by the President. After the expiry of that time the documents with the explanation, if any, shall be referred for consideration to a Penal Cases Committee which shall be appointed by the Council. The Committee shall have power to cause further investigation to be made and further evidence to be taken and, if necessary, obtain further legal or other advice.

(*2*) The Committee shall report to the Council, and if the Council consider that the case is one in which an enquiry ought to be held by the Council, the President shall direct the Registrar to take steps for the institution of an enquiry and for having the case heard and determined by the Council.

9. The enquiry shall be instituted by the issue of a notice in writing, on behalf of the Council, by the Registrar, addressed to the Practitioner. Such notice shall specify the nature and particulars of the charge, shall inform the Practitioner of the day on which the Council intend to deal with the case, and shall call upon him to answer the charge in writing and to attend before the Council on that day.

10. The notice referred to in rule 9 shall be in Form No. V in the Appendix to these rules, with such variations as circumstances may require. It shall be sent at least twenty-one days before the date of the enquiry, and shall be accompanied by a copy of section 17 or 25 of the Act, as the case may be, and of the rules to regulate the procedure for conducting any enquiry referred to in those sections. A copy of the notice should at the same time be sent to the complainant, if any.

11. In every case in which the Council resolve that an enquiry shall be instituted and a notice for an enquiry is issued accordingly, the complainant (if any) and the Medical Practitioner charged shall, upon request in writing for that purpose signed by him or his legal representative, be entitled to be supplied by the Registrar with a copy of any declaration, explanation, answer or other document given or sent to the Council by or on behalf of the other party, which such other party will be entitled on proper proof to use at the hearing as evidence in support of or in answer to the charge specified in the notice of enquiry.

12. Any application made by the Medical Practitioner between the date of issue of the notice and the day named for the hearing of the charge shall be dealt with by the President in such manner as he shall think fit.

13. All material documents which are to be laid before the Council as evidence in regard to the case shall be printed, and a copy shall be furnished to each member of the Council before the hearing of the case.

14. At the hearing of the case by the Council, the complainant and also the Practitioner may be represented or assisted by a legal representative.

15. Where a complainant appears personally or by a legal representative, the order of procedure shall be as follows:—

(*1*) The Registrar will read to the Council the notice of the enquiry addressed to the Practitioner.

(*2*) The complainant will then be invited to state his case himself or by his legal representative and to produce his proofs in support of it. At the conclusion of the complainant's proofs his case will be closed.

(*3*) The practitioner will then be invited to state his case himself or by his legal representative, and to produce his proofs in support of it. He may address the Council either before or at the conclusion of his proofs, but only once.

(*4*) At the conclusion of the Practitioner's case, the Council will, if the Practitioner has produced evidence, hear the complainant in reply on the case generally, but will hear no further evidence except in any special case in which the Council may think it right to receive such further evidence. If the Practitioner produces no evidence, the complainant will not be heard in reply, except by special leave of the Council.

(*5*) Where a witness is produced by any party before the Council, he will be first examined by the party producing him, and then cross-examined by the adverse party, and then re-examined by the party producing him. The Council may decline to admit in evidence any declaration where the declarant is not present for, or declines to submit to, cross-examination.

(*6*) The Chairman of the meeting may put questions to any witness, and members of the Council, through the Chairman, may also put questions to any witness.

16. Where there is no complainant, or no complainant appears, the order of procedure shall be as follows:—

(*1*) The Registrar will read to the Council the notice of enquiry addressed to the Practitioner and will state the facts of the case and produce before the Council the evidence by which it is supported.

(*2*) The Practitioner will then be invited to state his case himself or by his legal representative, and to produce his proofs in support of it. He may address the Council either before or at the conclusion of his proofs, but only once,

17. (*1*) Upon the conclusion of the case the Council will deliberate thereon in private, and at the conclusion of the deliberations the Chairman shall call upon the Council to vote on the question whether the Medical Practitioner charged is guilty of infamous conduct in a professional respect.

(*2*) If the Council, by a majority of two-thirds of the members present and voting at the meeting, find the Medical Practitioner guilty of infamous conduct in a professional respect, the Council shall direct the Registrar not to register his name, if he be an applicant for registration, or to remove his name from the Register of Registered Practitioners, if he is already a Registered Practitioner or to warn or to censure him.

18. When the registration of the name of any Practitioner is refused, or when the name of any Registered Practitioner is removed from the Register in accordance with the provisions of the preceding rules, the Registrar shall forthwith send notice of such refusal or removal to the Practitioner, by a registered letter addressed to his last known address. The Registrar shall also send, forthwith, intimation of any such refusal or removal to the body or bodies from whom the Practitioner received his qualification or qualifications, and shall request them not to admit him without previous reference to the Council to any examination for any new qualification, which is registrable in the Register of Registered Practitioners. If a name is removed from the Register, the Registrar shall issue a notification in the *Calcutta Gazette* announcing the removal and forward a summary of the proceedings and findings to the medical journals for publication.

Rules under clause (d)(ii) of sub-section (2) of section 33 of the Act.

Disposal of appeals from the decision of the Registrar preferred under section 23 of the Act.

19. An appeal to the Council, preferred under section 23 of the Act, against a refusal of the Registrar to register the name or any title or qualification of any person on the Register of Registered Practitioners, shall be in writing and shall state the grounds on which registration is claimed, the names of the qualifications, and the dates on which and the authorities from whom they were received.

20. On receipt of such an appeal, it shall be referred to a Committee of the Council for consideration and report.

21. The Committee shall have power to call for the original diploma or license, etc., from the appellant for inspection and also such other documentary or oral evidence as may be considered necessary by them.

22. At the conclusion of their enquiry, the Committee shall make a report to the Council embodying such recommendations as they shall think fit to make, with the reasons for the recommendations.

23. The appeal, the Committee's report on it, and all other documents in connection with the case shall be laid before the Council at their next session.

24. The date on which the appeal is to be taken up by the Council shall be notified to the appellant. The appellant shall also be allowed, if he so chooses, to represent his case before the Council, either by himself or by his legal representative.

II. *Add* the following new rules:—

Rules under clause (1) of section 33 of the Act.

Rules for the restoration of names to the Medical Register.

RESTORATION AFTER NON-PENAL ERASURE UNDER SECTION 16 OF THE ACT.

25. (*1*) The Council may restore to the Medical Register, if they see fit, the name of any person which may have been erased therefrom under section 16 of the Act.

(*2*) No application for the restoration of a name so removed shall be entertained unless it be accompanied by a declaration from the applicant setting forth the facts of the case, and stating that he is the person originally registered, and by one of the following documents:—

(*a*) Applicant's diploma;

(*b*) his certificate of registration in original;

(*c*) A certificate in the form reproduced below from two Practitioners registered under the Act as to his identity;

(*d*) if the applicant is not resident in Bengal, a certificate signed by two persons, who shall be Magistrates or officers holding a commission in one of His Majesty's Services, Civil, Naval, or Military, or Justices of the Peace, or two Resident Practitioners registered under the Medical Acts.

(*3*) A fee of Rs. 5 shall be levied for the re-registration of practitioners whose names have been erased from the Register under section 16 of the Act.

"I hereby certify that the aforesaid applicant is the above specified .....whose name formerly stood in the Medical Register with the following address and qualification*:—

Name†.....

Address.....

Registered qualification or commission.....

Date....."

*Here insert applicant's former address and registered qualification.
†Here insert name and address of person certifying.

RESTORATION AFTER PENAL REMOVAL UNDER SECTION 25 OF THE ACT.

26. An application for the restoration to the Medical Register of a name removed under section 25 of the Act shall not be entertained before the ordinary meeting of the Council next succeeding that in which the removal was ordered.

If any person whose name has been removed from the Medical Register by direction of the Council, and who still possesses a qualification entitling him to be registered, makes an application to the Council for the restoration of his name to the Register, the following shall be the method of procedure:—

(*i*) The application shall be in writing, addressed to the Council, and signed by the applicant, and must state the grounds on which the application is made.

(*ii*) The application shall be accompanied by (*1*) a declaration made by the applicant setting forth the facts of the case, and stating that he is the person originally registered, and (*2*) by one of the following documents:—

(*a*) Applicant's diploma;

(*b*) His certificate of registration in original;

(*c*) A certificate in the form reproduced below from two Practitioners registered under the Act as to his identity;

(*d*) If the applicant is not resident in Bengal, a certificate signed by two persons, who shall be Magistrates or officers holding a commission in one of His Majesty's Services, Civil, Naval, or Military, or Justices of the Peace, or two resident Practitioners registered under the Medical Acts.

Each of these certificates of identity shall be in the following terms:—

"I hereby certify that the aforesaid applicant is the above specified.....whose name formerly stood in the Medical Register with the following address and qualification*:—

Name†.....

Address.....

Registered qualification or commission.....

Date....."

---

*Here insert applicant's former address and registered qualification.
†Here insert name and address of person certifying.

(*iii*) The statements in the application must also be verified by certificates in writing, to be given by two Medical Practitioners registered under the Act or the Medical Acts resident in the neighbourhood where the applicant had been residing since his removal, who were and are well acquainted with him before and since the removal of his name, and they must testify to his present good character.

(*iv*) On receipt of the application, it shall be referred by the Registrar to the Penal and Ethical Cases Committee, for consideration and report. Before an application is considered by the Committee, the Registrar shall notify the same to the Licensing Bodies whose qualifications were held by the applicant at the time his name was removed; and shall further, by letter addressed to the person or body (if any) on whose complaint the applicant's name was removed, give notice of the application and of the time when the Committee intend to consider the same.

(*v*) The Penal and Ethical Cases Committee shall consider the application and may, if they think fit, adjourn the consideration of it to a future date or require further evidence or explanations from the applicant.

(*vi*) The Penal and Ethical Cases Committee shall make a report upon the application to the Council *in camera* embodying in that report such recommendations as the Committee shall think fit to make, with the reasons for the recommendations.

(*vii*) The application and the certificates referred to in paragraph (*iii*) shall be in the Forms VI and VII in the Appendix with such variations as circumstances may require. Printed forms shall be kept by the Registrar who shall supply them to intending applicants.

APPENDIX.

Form No. IV.

(*Vide Rule 7.*)

The Register of Registered Practitioners.

1	2	3	4	5	6		7
Serial No.	Date of registration.	Name.	Address or appointment.	Qualification and dates thereof.	Date and reason of removal.		Remarks.
					Date.	Section of the Act under which the name is removed.	

Form No. V.

(*Vide Rule 10*).

Notice to Practitioner to attend proceedings in connection with the enquiry under section 17 or 25 of the Act.

SIR,

On behalf of the Bengal Council of Medical Registration, I give you notice that information and evidence have been laid before the Council by which the complainants make the following charge against you, namely (here set out the circumstances briefly), and that in relation thereto you have been guilty of infamous conduct in a professional respect.

And I am directed further to give you notice that on the of 19 , a meeting of the Council will be held at/in at o'clock in the to consider the abovementioned charges against you and decide whether or not they should direct that your name shall not be registered in/that your name be removed from the Register of Registered Practitioners pursuant to section 17/25 of the Bengal Medical Act, 1914. You are invited and required to answer in writing the above charges and to attend before the Council at the abovenamed place and time, to establish any denial or defence that you may have to make to the abovementioned charges, and you are hereby informed that if you do not attend as required, the Council may proceed to hear and to decide upon the said charges in your absence.

Any answer or other communication or application which you may desire to make respecting the said charges, or your defence thereto, must be addressed to the Registrar of the Bengal Council of Medical Registration and transmitted so as to reach him not less than days before the day appointed for the hearing of the case.

A copy of the 17th/25th section of the Bengal Medical Act, 1914, and of the rules to regulate the procedure for conducting any enquiry referred to in that section, to which your particular attention is invited, is enclosed herewith for your information.

Registrar.

Form No. VI.

(Vide Rule 26).

Statutory declaration by applicant for restoration of name to the Medical Register.

To the Council of Medical Registration, Bengal.

"(*i*) I, the undersigned* now holding the qualification of† , do solemnly and sincerely declare that the following are the facts of my case, and in reason of which I seek restoration of my name to the Medical Register.

(*ii*) In the year (*a*) my name was duly registered in the Medical Register in respect of the following qualifications, namely (*b*) , and on the date of the removal of my name hereinafter mentioned I was registered in respect of the same qualifications (*c*), and also in respect of the following additional qualifications, namely.....

(*iii*) At an enquiry held on the (*d*).....day of.....the Council of Medical Registration, Bengal, directed my name to be removed from the Medical Register on a complaint made to the said Medical Council by (*e*).....of..... and the offence for which the Medical Council directed the removal of my name was (*f*).

(*iv*) Since the removal of my name from the Medical Register I have been residing at (*g*).....and my occupation has been.....

(*v*) It is my intention if my name is restored to the Medical Register to (*h*).....

(*vi*) The grounds of application are (*i*).....

(Signed)

Declared at.....on.....before me.

A Commissioner for Oaths, or Justice of the Peace.

---

*Insert full name.

†Insert qualifications, if any.

(*a*) Insert date.
(*b*) Insert original qualifications.
(*c*) To be added to, if necessary.
(*d*) Insert date of enquiry.
(*e*) Insert name and address of complainant.
(*f*) Insert charge on which name was removed.
(*g*) The blanks in this paragraph must be filled in according to circumstances.
(*h*) Insert particulars as to proposed future professional occupation.
(*i*) All facts and grounds on which the application is made should be clearly and concisely stated.

Form No. VII.

(*Vide Rule 26*).

CERTIFICATE IN SUPPORT OF APPLICATION.

I,.....

of.....

certify as follows:—

(*i*) I am (*a*).....

(*ii*) I have read paragraphs (*iv*) and (*v*) of the application of..... .....and say that I have been and am well acquainted with the said.....both before and since his name was removed from the Medical Register, that I believe him to be now a person of good character, and that the statements in the said paragraphs are to the best of my knowledge, information and belief true.

(*Signed*)

(*Name*)

(*Address and qualification*).

(*a*) State under what Act you have been registered as a qualified practitioner.

Minister-in-charge: The Hon'ble Sir Bijoy Prasad Singh Roy, Kt.

Jessore.—No. 410 Medl.—5th February 1935.—The undermentioned gentlemen have been appointed to be members of the managing committee of the Jessore Ayurvedic Dispensary in the district of Jessore:—

Vice-Chairman, No. I, district board, Jessore.
Vice-Chairman, No. II, district board, Jessore.
Chairman, Jessore Municipality.
Vice-Chairman, Jessore Municipality.
Health Officer, district board, Jessore.
Dr. Sridhar Haldar, M.B.
Dr. Purna Gopal Basu, L.M.F., M.R.A.S.
Kaviraj Abala Kanta Mazumdar.
Babu Nishi Nath Mookherjee.
Babu Nagendra Nath Ghosh (II), B.L.
Dr. Kazi Amanatulla.

G. S. DUTT,
Secy. to the Govt. of Bengal.

Public Health.

NOTIFICATIONS.

No. 255P.H.—5th February 1935.—For the purposes of the Paris Sanitary Convention, 1926, and with reference to rule 1 (*5*) of the rules framed under section 6, sub-section (*1*), clause (*p*) of the Indian Ports Act, 1908 (Act XV of 1908), and published in Marine Department notification No. 16Mne., dated the 6th March 1917, the Governor in Council is pleased to declare Rangoon to be an infected port on account of plague.

No. 295P.H.—5th February 1935.—For the purposes of the Paris Sanitary Convention, 1926, and with reference to rule 1 (*5*) of the rules framed under section 6, sub-section (*1*), clause (*p*) of the Indian Ports Act, 1908 (Act XV of 1908), and published in Marine Department notification No. 16Mne., dated the 6th March 1917, the Governor in Council is pleased to declare the city of Madras to be infected port on account of cholera.

Minister-in-charge: The Hon'ble Sir Bijoy Prasad Singh Roy, Kt.

Chittagong.—No. 242P.H.—5th February 1935.—In exercise of the power conferred by clause (*b*) of sub-section (*1*) of section 2 of the Bengal Agricultural and Sanitary Improvement Act, 1920 (Bengal Act VI of 1920), the Government of Bengal (Ministry of Public Health) are pleased to appoint Mr. Khondkar Gholam Murshed, I.C.S., Additional District Magistrate, Chittagong, *vice* Mr. Sukumar Basu, I.C.S., to discharge all functions of the Collector under that Act in respect of the district of Chittagong.

Dacca.—No. 346P.H.—11th February 1935.—Captain J. D. Sinha, M.R.C.P.E., L.R.C.P. (Edin.), L.R.F.P.S. (Glas.), D.P.H. (Cal.), D.T.M. & H. (Edin.), L.M. (Dub.), is appointed to act as Assistant Director of Public Health, Bengal, from the 5th January 1935 to the 22nd February 1935, *vice* Dr. R. C. Ray, on leave, and is placed in charge of the Dacca Circle.

This supersedes notification No. 2861P.H., dated the 20th December 1934.

Dacca.—No. 347P.H.—11th February 1935.—Captain J. D. Sinha, M.R.C.P.E., L.R.C.P. (Edin.), L.R.F.P.S. (Glas.), D.P.H. (Cal.), D.T.M. & H. (Edin.), L.M. (Dub.), is appointed as Assistant Director of Public Health, Bengal, on probation for two years, with effect from the 23rd February 1935, and is placed in charge of the Dacca Circle.

H. R. WILKINSON,
Secy. to the Govt. of Bengal.

EDUCATION DEPARTMENT.

NOTIFICATION.

Minister-in-charge: The Hon'ble Khan Bahadur M. Azizul Haque.

Dacca-Chittagong.— No. 552Edn. — 11th February 1935.—The following officers are appointed to the Bengal Educational Service as Headmasters of Government High Schools with effect from the date mentioned against each:—

Maulvi A. M. Md. Arshad, officiating Headmaster, Government Moslem High School, Dacca—16th December 1933.

Mr. Birendra Kumar Biswas, officiating Headmaster, Armanitola Government High School, Dacca—16th November 1934.

Mr. Abdus Samad, officiating Headmaster, Government Moslem High School, Chittagong—3rd December 1934.

2. This cancels the orders in notification No. 2840Edn., dated the 13th November 1934.

Registration.

NOTIFICATIONS.

Minister-in-charge: The Hon'ble Khan Bahadur M. Azizul Haque.

Bakarganj.—No. 155Regn.—4th February 1935.—In exercise of the power conferred by section 3 of the Bengal Muhammadan Marriages and Divorces Registration Act, 1876 (Bengal Act I of 1876), the Government of Bengal (Ministry of Education) are pleased to appoint Maulvi Habibur Rahman, to be a Muhammadan Registrar within chaukidari unions Nos. XIII—XXI of police-station Amtali, in the district of Bakarganj.

Bakarganj.—No. 156Regn.—4th February 1935.—In exercise of the power conferred by section 2 of the Kazi's Act, 1880 (Act XII of 1880), the Government of Bengal (Ministry of Education) are pleased to appoint Maulvi Habibur Rahman to be the Kazi for the celebration of marriages and the performance of other rites and ceremonies within chaukidari unions Nos. XIII—XXI of police-station Amtali, in the district of Bakarganj.

Malda.—No. 161Regn.—6th February 1935.—In exercise of the power conferred by section 3 of the Bengal Muhammadan Marriages and Divorces Registration Act, 1876 (Bengal Act I of 1876), the Government of Bengal (Ministry of Education) are pleased to appoint Maulvi Jainal Abedin temporarily to be a Muhammadan Registrar within the police-stations of Bamangola, Habibpur and Gajole, in the district of Malda.

Malda.—No. 162Regn.—6th February 1935.—In exercise of the power conferred by section 2 of the Kazis' Act, 1880 (Act XII of 1880), the Government of Bengal (Ministry of Education) are pleased to appoint Maulvi Jainal Abedin temporarily to be the Kazi for the celebration of marriages and the performance of other rites and ceremonies within the police-stations of Bamangola, Habibpur and Gajole, in the district of Malda.

Mymensingh.—No. 168Regn.—11th February 1935.—It is notified for general information that the Government of Bengal (Ministry of Education) are pleased to sanction the retention for a further period of one year, with effect from the 1st December 1934, of the office of the Joint Sub-Registrar of Jamalpur at Madarganj, in the district of Mymensingh.

H. R. WILKINSON,
Secy. to the Govt. of Bengal.

Orders by the Director of Public Instruction, Bengal.

Bengal Educational Service.

Dacca. — No. 7B.—21st January 1935.—Miss Niroj Bashini Shome, officiating Inspectress of Schools, Dacca Circle, in the Women's Branch of the Bengal Educational Service, is granted privilege leave on full pay, under article 260 of the Civil Service Regulations, for four months, with effect from 15th February 1935, or any subsequent date on which she avails herself of it.

Chittagong.—No. 9B.—30th January 1935.—Babu Bhabesh Chandra Banerji, Professor of Sanskrit and officiating Vice-Principal, Chittagong College, in the Bengal Educational Service, is granted leave on average pay, on medical certificate, under the proviso to Fundamental Rule 81 (*b*) (*ii*) for the period from 2nd January 1935 to 18th April 1935.

2. He is permitted to prefix to the leave Sunday, the 23rd December 1934, the Christmas and the New Year's Day holidays extending from 24th December 1934 to 1st January 1935, provided the conditions prescribed in Subsidiary Rules 206 to 208 are fulfilled.

3. He is also permitted to suffix to the leave the gazetted holidays from 19th April 1935 to 24th April 1935 and the summer vacation of the Chittagong College extending from 23rd April 1935 to 28th June 1935, under Fundamental Rule 82 (*d*).

J. M. BOTTOMLEY,
Director of Public Instrn., Bengal.

Orders by the Inspector-General of Registration, Bengal.

Dinajpur-Rajshahi.—No. 33.—4th February 1935.—Maulvi Tajuddin Ahmed, Sub-Registrar attached to Dinajpur, officiating Joint Sub-Registrar of Natore at Singra, in the district of Rajshahi, is allowed leave on average pay for one month, under rule 81 (*b*) (*ii*) of the Fundamental Rules, with effect from the date on which he may be relieved.

Howrah-Rajshahi.—No. 34.—4th February 1935.—Babu Ahindra Nath Mukharji, Sub-Registrar attached to Howrah, is appointed to act as Joint Sub-Registrar of Natore at Singra, in the district of Rajshahi, with effect from the date on which he joins the appointment, during the absence, on leave, of Maulvi Tajuddin Ahmed, or until further orders.

Tippera.—No. 35.—4th February 1935.—Maulvi Khadem Rasul, Sub-Registrar of Nasirnagar, in the district of Tippera, was on leave on average pay for two days, under rule 81 (*b*) (*ii*) of the Fundamental Rules, in extension of the leave granted to him in this department notification No. 401, dated the 22nd August 1934.

Jessore.—No. 36.—5th February 1935.—Babu Atul Krishna Banarji, Sub-Registrar of Kotchandpur, in the district of Jessore, is allowed leave on average pay for one day, viz., on the 7th February 1935, under rule 81 (*b*) (*ii*) of the Fundamental Rules.

24-Parganas.—No. 37.—5th February 1935.—Babu Kishori Mohan Basu, Sub-Registrar of Cossipore-Dum-Dum, in the district of the 24-Parganas, is allowed leave on average pay for one month and nine days, under rule 81 (*b*) (*ii*) of the Fundamental Rules, in extension of the leave granted to him in this department notification No. 599, dated the 11th December 1934.

24-Parganas.—No. 38.—5th February 1935.—Babu Ramesh Chandra Das Gupta, Sub-Registrar attached to Alipore, in the district of the 24-Parganas, is appointed to act as Sub-Registrar of Cossipore-Dum-Dum in the same district, with effect from the 4th January 1935, *vice* Babu Kishori Mohan Basu, Sub-Registrar, on leave, or until further orders.

24-Parganas.—No. 39.—5th February 1935.—Babu Nakuleswar Chakrabatti, Sub-Registrar attached to Alipore, in the district of the 24-Parganas, is allowed leave on average pay for six days, under rule 81 (*b*) (*ii*) of the Fundamental Rules, in extension of the leave granted to him in this department notification No. 606, dated the 11th December 1934.

Bakarganj.—No. 40.—5th February 1935.—Babu Surendra Nath Ghosh, Sub-Registrar of Golachipa, in the district of Bakarganj, is allowed leave on average pay for fourteen days, under rule 81 (*b*) (*ii*) of the Fundamental Rules, with effect from the date on which he may be relieved.

Mymensingh.—No. 41.—5th February 1935.—Maulvi Ghulam Maqsud Khan, Joint Sub-Registrar of Kendua at Madan, in the district of Mymensingh, is allowed leave on average pay for six days, under rule 81 (*b*) (*ii*) of the Fundamental Rules, with effect from the 11th February 1935.

Bogra.—No. 42.—5th February 1935.—Maulvi Sakhawat Ali, Sadar 2nd Joint Sub-Registrar of Bogra, is allowed leave on average pay for twenty-three days, under rule 81 (*b*) (*ii*) of the Fundamental Rules, in extension of the leave granted to him in this department notification No. 3, dated the 4th January 1935.

Mymensingh. — No. 43. — 5th February 1935.—Babu Radha Ballabh Banik, Sub-Registrar of Kalihati, in the district of Mymensingh, is allowed leave on average pay for one month and nine days, under rule 81 (*b*) (*ii*) of the Fundamental Rules, in extension of the leave granted to him in this department notification No. 649, dated the 22nd December 1934.

Pabna.—No. 44.—5th February 1935.—This department notification No. 641, dated the 20th December 1934, granting leave on average pay for seven days to Babu Suresh Chandra Chakrabatti, Sub-Registrar of Sujanagar, in the district of Pabna, with effect from the 2nd January 1935, is cancelled.

Dacca - Bakarganj.—No. 45.—5th February 1935.—Babu Bhupendra Narayan Rakshit, Sub-Registrar attached to Dacca, is appointed to act, until further orders, as Joint Sub-Registrar of Amtoli at Barguna, in the district of Bakarganj.

This cancels this department notification No. 16, dated the 18th January 1935, on the subject of deputation of Maulvi Md. Jalaluddin to Barguna.

Rangpur - Mymensingh. — No. 46.—5th February 1935.—Babu Abala Kanta Bhaduri, Sub-Registrar attached to Mymensingh, now officiating at Sarishabari in the same district, acted as Sub-Registrar of Palashbari, in the district of Rangpur, from the 25th September 1934 to the 11th October 1934 (both the days inclusive), during the absence, on leave, of the permanent incumbent, or until further orders.

Pabna. — No. 47.—5th February 1935.—Maulvi Hakimuddin Ahmed, Joint Sub-Registrar of Serajganj at Gandhail, in the district of Pabna, was on extraordinary leave without allowance for thirteen days, under rule 85 (*a*) of the Fundamental Rules, in extension of the leave granted to him in this department notification No. 554, dated the 21st November 1934.

Murshidabad.—No. 48. — 11th February 1935.—Maulvi Khandkar Muhammad Ziaul Ahsan, Sub-Registrar attached to Murshidabad, is appointed to act as Sub-Registrar of Jangipur in the same district, with effect from the 25th January 1935, till relieved by Maulvi Saiyid Zarghamuddin Hyder Hasony, Sub-Registrar, under orders of transfer to Jangipur.

Dacca.—No. 49.—11th February 1935. — Maulvi A. Y. M. Hafizur Rahman Chaudhuri, officiating Joint Sub-Registrar of Raipura at Sibpur, in the district of Dacca, is confirmed in his present officiating appointment as Sub-Registrar of Sibpur.

Pabna.—No. 50.—11th February 1935. — Maulvi Hakimuddin Ahmed, Joint Sub-Registrar of Sirajganj at Gandhail, in the district of Pabna, is allowed leave for four days, viz., leave on average pay for three days, under rule 81 (*b*) (*ii*) of the Fundamental Rules, with effect from the 9th January 1935, and leave on half average pay in continuation for one day, under rule 81 (*d*) of the said rules.

S. AHMED,
Inspector-General of Regn., Bengal.

COMMERCE DEPARTMENT.

NOTIFICATIONS.

No. 980Com.—6th February 1935.—Whereas the period of two years prescribed under sub-clause (*a*) of clause (*6*) of the Khulna Electric License, 1932, granted under Bengal Government notification No. 7005Com., dated the 6th December 1932, to the Khulna Electric Supply Corporation, Ltd., for the performance by the licensees of the obligations imposed on them by the aforementioned clause of the said license, expired on the 6th December 1934, and whereas the licensees have failed to perform the said obligations within that time and have applied to the Government for an extension of the period:

Now, therefore, the Governor in Council is pleased, in exercise of the powers conferred by sub-section (*2*) of section 4 of the Indian Electricity Act, 1910 (IX of 1910), to direct that the license shall remain in force up to the 6th June 1935, subject to the performance by the licensee of the said obligations.

No. 1176Com.—6th February 1935.—The following draft of an amendment which, with the previous sanction of the Governor-General in Council, and in exercise of the power conferred by section 9 of the Indian Petroleum Act, 1899 (VIII of 1899), the Governor in Council intends to make in the rules to regulate the importation, possession and transport of petroleum in the Presidency of Bengal, published under the Government of Bengal, Marine Department, notification No. 143-Marine, dated the 30th November 1914, and as subsequently amended, is published, as required by sub-section (*1*) of section 24 of the said Act, for the information of persons likely to be affected thereby.

2. The draft amendment will be taken into consideration on or after the 20th May 1935, and any objections or suggestions with regard thereto received by the undersigned before that date will be duly considered:—

Draft amendment.

In forms A, B, C, D, E, H and L appended to the said rules, after the words "back of this license" the following *shall* be added, namely:—

The license shall continue in force till the .....day of.....

D. GLADDING,
Secy. to the Govt. of Bengal.

MARINE DEPARTMENT.

NOTIFICATION.

No. 4Mne.—6th February 1935.—Mr. T. H. Elderton, Chairman of the Commissioners for the Port of Calcutta, is granted leave for seven months, namely, leave on average pay for two months and twenty-eight days and leave on half average pay for the remaining period, with effect from the 25th February 1935.

Mr. W. A. Burns, Deputy Chairman, is appointed, under section 12 of the Calcutta Port Act, 1890, to officiate as Chairman, during the absence, on leave, of Mr. T. H. Elderton, on the pay of the post.

D. GLADDING,
Secy. to the Govt. of Bengal.

DEPARTMENT OF AGRICULTURE AND INDUSTRIES.

Industries.

RESOLUTION—No. 804 Ind.

Calcutta, the 5th February 1935.

Minister-in-charge: The Hon'ble Nawab K. G. M. Faroqui, Khan Bahadur.

Read—An application, dated the 9th September 1934, from Babu Sudhir Kumar Ghosh of Chinsura for a loan of Rs. 600 under section 19(*1*)(*a*) of the Bengal State Aid to Industries Act, 1931 (Bengal Act III of 1931), for the purpose of investment as working capital in his umbrella-making business.

Read also the resolution adopted by the Board of Industries, Bengal, at a meeting held on the 5th November 1934 incorporated in the report submitted with letter No. 20045G., dated the 9th January 1935, from the Secretary to the Board of Industries, Bengal.

Order.—Ordered that the loan of Rs. 600 only asked for be sanctioned provided that the security offered by the applicant is sufficient and also subject to the following conditions:—

(*i*) that a mortgage bond be executed by the applicant and his brother in a form to be prescribed by Government for the purpose;

(*ii*) that interest be charged at the rate of 6¼ per cent. per annum payable with each instalment on the balance of the unpaid principal;

(*iii*) that the entire loan with interest thereon be repaid in six annual instalments of Rs. 100 each, each instalment being payable in January each year beginning with January 1936; and

(*iv*) that penal interest be charged at the rate of 8 per cent. per annum on any overdue instalment of repayment of the loan.

Ordered also that the resolution be published in the *Calcutta Gazette*.

By order of the Govt. of Bengal
(Ministry of Industries),

J. D. V. HODGE,
Secy. to the Govt. of Bengal.

Veterinary.

NOTIFICATIONS.

Minister-in-charge: The Hon'ble Nawab K. G. M. Faroqui, Khan Bahadur.

No. 726 Vety.—2nd February 1935.—Babu Sailendra Nath Sinha, Lecturer, Bengal Veterinary College, in the Bengal Lower Veterinary Service, on probation, is confirmed in that appointment, with effect from the 1st July 1929.

No. 727 Vety.—2nd February 1935.—Babu Hari Charan Ganguly, Lecturer, Bengal Veterinary College, in the Bengal Lower Veterinary Service, on probation, is confirmed in that appointment, with effect from the 1st July 1931.

No. 728 Vety.—2nd February 1935.—Maulvi Serajul Haque, Lecturer, Bengal Veterinary College, in the Bengal Lower Veterinary Service, on probation, is confirmed in that appointment, with effect from the 25th September 1931.

Dacca.—No. 729 Vety.—2nd February 1935.—Babu Mokshada Prasad Ghosh, Assistant Director, Civil Veterinary Department, Eastern Range, Dacca, in the Bengal Lower Veterinary Service, on probation, is confirmed in that appointment, with effect from the 22nd June 1933.

Forests.

NOTIFICATION.

Jalpaiguri - Chittagong. — No. 138For.—6th February 1935.—Mr. V. S. Rao, I.F.S., attached officer, Jalpaiguri Forest Division, is posted as an attached officer to the Chittagong Forest Division with headquarters at Chittagong.

J. D. V. HODGE,
Secy. to the Govt. of Bengal.

REVENUE DEPARTMENT.

Land Revenue.

NOTIFICATIONS.

Murshidabad.—No. 2395L.R.—11th February 1935.—Under the provisions of section 3(*14*) of the Bengal Tenancy Act, 1885 (Act VIII of 1885), Babu Mohini Mohan Choudhuri, Settlement Kanungo, is authorised to discharge, in the district of Murshidabad, the functions of a Revenue Officer, under Chapter X of that Act, so far as they relate to surveys and the preparation of record-of-rights.

Murshidabad.—No. 2396L.R.—11th February 1935.—In exercise of the powers conferred by section 3 of the Bengal Land Revenue Settlement Regulation, 1825 (IX of 1825), read with section 20 of the Bengal Land Revenue Settlement Regulation, 1822 (VII of 1822), the Governor in Council is pleased to vest Babu Mohini Mohan Choudhuri, Settlement Kanungo, who has, by notification No. 1596C.P., dated the 28th January 1935, been vested by the Board of Revenue with the powers of a Collector in the estate of Babu Dwijendra Narayan Roy of Jemo, in the district of Murshidabad, for the purpose of the work of maintenance of the record-of-rights of that estate, with powers under section 19 of the said Bengal Land Revenue Settlement Regulation, 1822, within the local limits of that estate, to require and compel persons mentioned in the section to attend and produce accounts and other papers and to examine such persons under that section for the purpose of the said work of the maintenance of the record-of-rights.

Land Acquisition

NOTIFICATIONS.

Mymensingh.—No. 2203L.A.—5th February 1935.—Mr. Santosh Kumar Chatterjee, I.C.S., Subdivisional Officer, Jamalpur, in the district of Mymensingh, is vested with the powers of a Collector under the Land Acquisition Act, I of 1894, in that subdivision.

Pabna.—No. 2205L.A.—5th February 1935.—Rai Binod Bihari Sarkar Bahadur, Sadar Subdivisional Officer in the district of Pabna, is vested with the powers of a Collector under the Land Acquisition Act, I of 1894, in the Sadar subdivision of that district.

Faridpur. — No. 2377L.A. — 11th February 1935.—Whereas it appears to the Governor in Council that land is likely to be required to be taken by Government at the expense of the Char Bhadrasan and Akhaterchar union boards for a public purpose, viz., for excavating a khal from Kamarbari beel (within mauza Char Bhadrasan), to the Ramnagar river in the villages of Char Bhadrasan and Char Ramnagar, jurisdiction list Nos. 164 and 42, respectively, in thanas Faridpur and Bhanga, parganas Char Mukundia and Char Madhurdia, it is hereby notified that for the above purpose a piece of land measuring, more or less, 3·70 acres, comprising portions of cadastral plot Nos. 12864 to 12866, 12871 to 12875, 12881, 12886, 12887, 14474, 14475, 14504 to 14511, 14521, 14522, 14553 to 14555, 14580 to 14585 and 14588 of mauza Char Bhadrasan, and 558, 560, 563 to 565, 570, 573, 575, 581, 585 and 720 of mauza Char Ramnagar, is likely to be required within the aforesaid villages of Char Bhadrasan and Char Ramnagar.

This notification is made under the provisions of section 4 of Act I of 1894, to all whom it may concern.

A plan of the land may be inspected in the office of the Collector of Faridpur.

In exercise of the powers conferred by the aforesaid section, the Governor in Council is pleased to authorise the officers for the time being engaged in the undertaking, with their servants and workmen, to enter upon and survey the land and do all other acts required or permitted by that section.

In exercise of the powers conferred by section 17(*4*) of the Land Acquisition Act, I of 1894, as amended by Act XXXVIII of 1923, the Governor in Council is pleased to direct that the provisions of section 5A of the Act shall not apply in this case.

Khulna.—No. 2386L.A.—11th February 1935.—Whereas it appears to the Governor in Council that land is likely to be required to be taken by Government at the expense of the Phultala union board, for a public purpose, viz., for the extension of Uttardihi Jola Jugipara Road in the village of Uttardihi, jurisdiction list No. 1, thana Phultala, pargana Chengutia, district Khulna, it is hereby notified that for the above purpose a piece of land comprising part of cadastral plot No. 433, and measuring, more or less, 0·06 of an acre, is likely to be required within the aforesaid village of Uttardihi.

This notification is made under the provisions of section 4 of Act I of 1894, to all whom it may concern.

A plan of the land may be inspected in the office of the Collector of Khulna.

In exercise of the powers conferred by the aforesaid section, the Governor in Council is pleased to authorise the officers for the time being engaged in the undertaking, with their servants and workmen, to enter upon and survey the land and do all other acts required or permitted by that section.

Any person interested in the above land, who has any objection to the acquisition thereof may, within thirty days after the date on which public notice of the substance of this notification is given in the locality, file an objection in writing before the Collector of Khulna.

24-Parganas.—No. 2389L.A.—11th February 1935.—The Governor in Council is pleased to cancel the notification No. 9817L.A., dated the 26th August 1933, under section 4 of the Land Acquisition Act, I of 1894, published at pages 1232-33, Part I, of the *Calcutta Gazette* of the 31st idem, in respect of the proposed acquisition of 0·6611 of an acre of land required by the Commissioners for the Port of Calcutta, for the erection of a semaphore, staff quarters and depth lights for navigational purpose, in the village of Lohachara, jurisdiction list No. 3, thana Sagor, pargana Sundarban, district 24-Parganas.

24-Parganas.—No. 2392L.A.—11th February 1935.—Whereas it appears to the Governor in Council that land is likely to be required to be taken by Government at the expense of the Baraset-Basirhat Light Railway, for a public purpose, viz., for the construction of godowns at Kholapota, in the village of Mathurapur, jurisdiction list No. 59, thana Basirhat, pargana Balia, district 24-Parganas, it is hereby notified that for the above purpose two pieces of land comprising cadastral plot No. 1231 and portions of plot Nos. 1230, 1229, 1228 and 1250, and altogether measuring, more or less 0·1657 of an acre, are likely to be required within the aforesaid village of Mathurapur.

This notification is made under the provisions of section 4 of Act I of 1894, to all whom it may concern.

A plan of the land may be inspected in the office of the Chief Engineer, Barasat-Basirhat Light Railway.

In exercise of the powers conferred by the aforesaid section, the Governor in Council is pleased to authorise the officers for the time being engaged in the undertaking, with their servants and workmen, to enter upon and survey the land and do all other acts required or permitted by that section.

Any person interested in the above land, who has any objection to the acquisition thereof, may, within thirty days after the date on which public notice of the substance of this notification is given in the locality, file an objection in writing before the Collector of 24-Parganas.

Tippera.—No. 2398L.A.—11th February 1935.—Whereas it appears to the Governor in Council that land is likely to be required to be taken by Government at the expense of the district board of Tippera, for a public purpose, viz., for the construction of a road from Bitghar to Kaitala, in the villages of Bitghar, Haripur and Kaitala, jurisdiction list Nos. 591, 2/536 and 535/536, respectively, thana Nabinagar, pargana Nurnagar, district Tippera, it is hereby notified that for the above purpose a piece of land measuring, more or less, 13·51 acres, bounded on the—

North—By Kurulia khal, calastral survey plot No. 667,

South—By a khal,

East—By entire land of cadastral survey plot Nos. 624 and 629 of Bitghar and plot Nos. 63, 62, 79, 78, 77 and 76 of Haripur and part of cadastral survey plot Nos. 321, 320, 319, 315 and 317 in the village of Bitghar, 75, 346, 344, 342, 334, 331, 330, 375, 377, 379, 384, 386, 387, 397, 407, 405, 404, 593 and 592 in the village of Haripur, 574, 575, 576, 577, 563, 562, 555, 541, 537, 538, 527, 526, 662, 676, 664, 665, 666, 667, 670, 668, 669, 734, 735, 748, 749, 854, 750, 853, 2608, 2609, 2610, 2613, 2614, 3609, 2663, 2618, 2659, 2660, 2657, 3608, 2677, 2679 and 2647 in the village of Kaitala,

West—By part of land of cadastral survey plot Nos. 667, 676, 669, 671, 672, 2620, 2623, 2633, 2634, 2645, 2636 and 2637 in the village of Bitghar, 65, 66, 68, 69, 73, 74, 347, 348, 365, 366, 342, 334, 333, 331, 332, 375, 376, 377, 380, 383, 384, 385, 388, 387, 397, 407, 406, 404, 403 and 593 in the village of Haripur, 572, 574, 573, 576, 564, 563, 553, 554, 542, 537, 528, 526, 525, 676, 675, 666, 670, 671, 733, 734, 735, 748, 749, 750, 53, 852, 851, 809, 810, 2609, 2610, 2612, 2613, 2614, 3609, 2618, 2654, 2658, 2655, 2656, 3608, 2649 and 2647 in the village of Kaitala,

is likely to be required within the aforesaid villages of Bitghar, Haripur and Kaitala.

This notification is made under the provisions of section 4 of Act I of 1894, to all whom it may concern.

A plan of the land may be inspected in the office of the Subdivisional Officer of Brahmanbaria.

In exercise of the powers conferred by the aforesaid section, the Governor in Council is pleased to authorise the officers for the time being engaged in the undertaking, with their servants and workmen, to enter upon and survey the land and do all other acts required or permitted by that section.

Any person interested in the above land, who has any objection to the acquisition thereof, may, within thirty days after the date on which public notice of the substance of this notification is given in the locality, file an objection in writing before the Collector of Tippera.

Jalpaiguri.—No. 2401L.A.—11th February 1935.—The Governor in Council is pleased to cancel the notification No. 5315L.A., dated the 30th April 1934, under section 4 of the Land Acquisition Act, published at page 641, Part I of the *Calcutta Gazette* of the 3rd May 1934 in respect of the proposed acquisition of 0·55 acre of land required by the Jalpaiguri Municipality for a cow slaughter-house in ward No. V in the village of Khaira, pargana Baikunthapur, district Jalpaiguri.

Pabna.—No. 2407L.A. — 11th February 1935.—Whereas it appears to the Governor in Council that land is likely to be required to be taken by Government at the expense of the district board of Pabna, for a public purpose, viz., for widening road in the 27th mile of new Serajganj Road, section I, in the village

of Banagram, jurisdiction list No. 2, thana Bera, pargana Birahimpur, zilla Pabna, it is hereby notified that for the above purpose a piece of land comprising cadastral plot No. 779 in full, and measuring, more or less, 0·07 of an acre, is likely to be required within the aforesaid village of Banagram.

This notification is made under the provisions of section 4 of Act I of 1894, to all whom it may concern.

A plan of the land may be inspected in the office of the Collector of Pabna.

In exercise of the powers conferred by the aforesaid section, the Governor in Council is pleased to authorise the officers for the time being engaged in the undertaking, with their servants and workmen, to enter upon and survey the land and do all other acts required or permitted by that section.

Any person interested in the above land, who has any objection to the acquisition thereof, may, within thirty days after the date on which public notice of the substance of this notification is given in the locality, file an objection in writing before the Collector of Pabna.

DECLARATIONS.

Pabna.—No. 2380L.A. — 11th February 1935.—Whereas it appears to the Governor in Council that land is required to be taken by Government at the public expense for a public purpose, viz., for widening the Pabna-Ishurdi Road at 7th mile in the village of Majidpur, jurisdiction list No. 55, thana Pabna, pargana Bajuras Nazirpur, district Pabna, it is hereby declared that for the above purpose a piece of land comprising parts of cadastral plot Nos. 680, 901, 683, 684, 686, 688 and 689, and measuring, more or less, 0·654 of an acre, is required within the aforesaid village of Majidpur.

This declaration is made under the provisions of section 6 of Act I of 1894, to all whom it may concern.

A plan of the land may be inspected in the office of the Collector of Pabna.

Burdwan.—No. 2383L.A.—11th February 1935.—Whereas it appears to the Governor in Council that land is required to be taken by Government at the public expense for a public purpose, viz., for constructing the approaches of the bridge at mile 14, chainage 40 of distributary No. 6, main canal, Damodar Canal Project, in the village of Bakalsa, jurisdiction list No. 128, thana Burdwan, pargana Shahabad, district Burdwan, it is hereby declared that for the above purpose two pieces of land comprising parts of cadastral survey plot Nos. 159-161 and altogether measuring, more or less, 0·28 of an acre, are required within the aforesaid village of Bakalsa.

This declaration is made under the provisions of section 6 of Act I of 1894, to all whom it may concern.

A plan of the land may be inspected in the office of the Special Land Acquisition Officer, Burdwan, as well as in that of the Executive Engineer, Damodar Canal Division, Burdwan.

24-Parganas.—No. 2404L.A.—11th February 1935.—Whereas it appears to the Governor in Council that land is required to be taken by Government at the expense of the Titagar Municipality for a public purpose, viz., for the Titagar Sewerage Extension, in the village of Titagar, jurisdiction list No. 5, thana Titagar, pargana Calcutta, district 24-Parganas, it is hereby declared that for the above purpose a piece of land comprising portion of cadastral plot No. 1126, and measuring, more or less, 0·0393 of an acre, is required within the aforesaid village of Titagar.

This declaration is made under the provisions of section 6 of Act I of 1894, to all whom it may concern.

A plan of the land may be inspected in the office of the Chairman of the Titagar Municipality.

Birbhum.—No. 2410L.A.—11th February 1935.—Whereas it appears to the Governor in Council that land is required to be taken by Government at the public expense for a public purpose, viz., for the construction of Assistant Sub-Inspector's quarters attached to the Maureswar police-station in the village of Maureswar, jurisdiction list No. 138, in thana Maureswar, pargana Dari Maureswar, district Birbhum, it is hereby declared that for the above purpose a piece of land, comprising cadastral plot 2498, and measuring, more or less, 0·14 of an acre, is required within the aforesaid village of Maureswar.

This declaration is made under the provisions of section 6 of Act I of 1894, to all whom it may concern.

A plan of the land may be inspected in the office of the Land Acquisition Collector, Rampurhat, district Birbhum.

O. M. MARTIN,
Secy. to the Govt. of Bengal.

BENGAL LEGISLATIVE COUNCIL DEPARTMENT.

NOTIFICATION.

No. 795L.C.—6th February, 1935.—It is hereby notified in pursuance of rule 14 (*9*) of the Bengal Electoral Rules that the following persons have been declared under rule 14 (*2*) of the aforesaid rules to have been duly elected by the constituency noted against their names to be members of the Bengal Legislative Council, namely:—

1. Mr. J. R. Walker—The Indian Jute Mills Association.
2. Mr. H. G. Cooper—The Bengal Chamber of Commerce.
3. Rai Ram Dev Chokhany Bahadur—Bengal Marwari Association.

J. W. MCKAY,
Secy. to the Bengal Legis. Council.

TREASURY NOTICES.

Noakhali, the 7th February 1935.

Sub-Deputy Collector Maulvi Bazl-ur-Rahman has been placed in charge of the Noakhali Treasury with effect from the afternoon of the 7th February 1935, and authorised to draw bills on other treasuries.

A. WHITTAKER, *Collector.*

Orders by the Deputy Accountant-General, Bengal.

The Treasury, the 4th February 1935.

It is notified that the refund order No. 3887 containing 50 orders is in use by the Income-tax Office, Central Salaries Circle, Calcutta, with effect from the 30th January 1935.

The Treasury, the 6th February 1935.

It is notified that the refund order No. 4758 containing 50 orders "White" is in use by the Income-tax Office, Military Circle, Meerut, with effect from the 24th January 1935.

A. R. REBELLO,

Dy. Accountant-General, Bengal.

SHERIFF'S OFFICE.

The 17th January 1935.

Notice is hereby given that the First Criminal Sessions of the year 1935 of the High Court of Judicature at Fort William in Bengal for the town of Calcutta and factory of Fort William and the places subordinate thereto, will be held at the Court House, in the town of Calcutta, on Monday, the 18th day of February next, at 11 o'clock in the forenoon, and thenceforward from day to day until the said sessions be over. And it is hereby proclaimed that all persons who are to prosecute any of the prisoners to be brought up for trial at the said sessions be present then and there to prosecute.

A. H. GHUZNAVI, *Sheriff.*

সরিফ আফিস, সন ১৯৩৫ সালের ১৭ই জানুয়ারী।

সকলকে সমাচার দেওয়া যাইতেছে যে, সুবে বাঙ্গালার ফোর্ট উইলিয়ম দুর্গের অধীনে সহর কলিকাতার ও অন্যান্য স্থানের ফৌজদারী বিচার নিষ্পত্তি জন্য আগামী সন ১৯৩৫ সালের ১৮ই ফেব্রুয়ারী সোমবার বেলা ১১ ঘটিকার সময় এবং যে পর্য্যন্ত সেসিয়নের কার্য্য সমাধা না হয়, প্রতিদিন উক্ত সময়ে কলিকাতার হাইকোর্টের আপন আদালত ঘরে সন ১৯৩৫ সালের প্রথম ক্রিমিন্যাল সেসিয়ন বসিবেক, এবং এতদ্বারা প্রচার করা যাইতেছে যে, যে সকল ব্যক্তি কোন কয়েদীর বিরুদ্ধে কোন ফৌজদারী মিছিল করিবেক, তাহারা উক্ত স্থানে উক্ত সময়ে হাজির থাকিয়া মোকদ্দমা করে। ইতি।

এ, এইচ, গজনাভি,
সরিফ।

HIGH COURT NOTICE.

English Department—Civil.

The 7th February 1935.

No. 3004A.—The Hon'ble the Chief Justice is pleased to appoint Mr. Hari Charan Ghosh, munsif of Rampurhat, in the district of Birbhum, whose services have been placed at the disposal of His Lordship by the Government of Bengal, to be Assistant Registrar (III) of the High Court, Appellate Side, Calcutta, with effect from the 26th January 1935.

By order of the High Court,
N. L. HINDLEY, *Registrar.*

ORDERS BY COMMISSIONERS OF DIVISIONS.

Burdwan Division—Chinsura.

No. 717J.G.—9th February 1935.—Babu Ashutosh Das Gupta, Sub-Deputy Collector, on leave, posted to this division as per Government order No. 1182A. of the 4th February 1935, is posted to Uluberia in the district of Howrah for employment in the general line. The posting is made in the public interest.

L. B. BURROWS, *Commissioner.*

Burdwan, the 31st January 1935.

It is hereby notified for general information that, under section 13 of the Bengal Village Self-Government Act, 1919 (Bengal Act V of 1919), read with rule 35 of the rules for the election and appointment of members of union boards, etc., Babu Arabinda Roy has been

duly elected to be a member of Ward No. I of the Kaity union board in police-station Raina in the Sadar subdivision of Burdwan, *vice* Babu Indu Bhusan Dutta, deceased.

M. M. STUART, *District Magistrate.*

Birbhum, the 2nd February 1935.

No. 3L.S.-G.—It is hereby notified for general information that, under section 13 of the Bengal Village Self-Government Act, 1919 (Bengal Act V of 1919), read with rule 35 of the rules for the election and appointment of members of union boards, etc., Babu Amulya Ratan Mukherji has been duly elected to be a member for Ward No. III of the Kaluha union board in Rampurhat police-station in the Rampurhat subdivision of the district of Birbhum, *vice* Munshi Abdus Sobhan, deceased.

No. 4L.S.-G.—It is hereby notified for general information that, under section 13 of the Bengal Village Self-Government Act, 1919 (Bengal Act V of 1919), read with rule 35 of the rules for the election and appointment of members of union boards, etc., Maulvi Basiruddin Biswas has been duly elected to be a member for Ward No. I of the Gorsa union board in Murarai police-station in the Rampurhat subdivision of the district of Birbhum, *vice* Babu Gopeswar Banerji, deceased.

K. L. MUKHARJI, *District Magistrate.*

Chittagong Division—Chittagong.

No. 644G.—4th February 1935.—Babu Sailendra Nath Das Gupta, Sub-Deputy Collector, Chittagong, is appointed Circle Officer of Satkania in the same district. The appointment is made in the public interest.

H. J. TWYNAM, *Commissioner (offg.).*

Dacca Division—Dacca.

No. 633J.—5th February 1935.—It is hereby notified for general information that in exercise of the powers delegated to me by Bengal Government notification No. 3403-L.S.-G., dated the 1st December 1904, I do hereby sanction, under section 6 (*c*) of the Bengal Ferries Act, I of 1885, the establishment of a new public ferry over Singardya Khal in the 5th mile of Keurbhanga Gossainhat road in police-station Gossainhat in Madaripur subdivision of Faridpur district.

2. In exercise of the powers delegated to me by Bengal Government notification No. 2141L.S.-G., dated the 20th July 1920, I direct, under section 35 of the aforesaid Act, as amended by section 2 read with schedule I of Bengal Village Self-Government Act, V of 1919, that the said ferry shall be managed by the district board of Faridpur and that all the proceeds of the said ferry and all fines levied and compensations received under the said Act in respect thereof shall be paid into the district fund of Faridpur with effect from the date of this notification.

W. H. NELSON, *Commissioner.*

Dacca, the 9th February 1935.

No. 1292-95M.—It is hereby notified for general information that, under section 13 of the Bengal Village Self-Government Act, V of 1919, Dr. Muhammad Hossain has been elected to be a member of the Toke union board in Kapasia police-station, in the Sadar (North) subdivision of the district of Dacca, *vice* Munshi Basiruddin Bepari, deceased.

B. C. PRANCE, *District Magistrate.*

Presidency Division—Calcutta.

No. 236 L.S.-G.—5th February 1935.—It is hereby notified for general information that, under the second proviso to rule 21 of the dispensary manual, Babu Ram Narayan Roy Choudhury has been appointed by the Khulna district board to be a life member of the managing committee of the Bagerhat Class III-A Charitable Dispensary in the district of Khulna, in place of Dr. Jatindra Nath Banerjee, an ordinary member who has resigned.

K. A. L. HILL, *Commissioner (offg.).*

No. 332R.G.—7th February 1935. — Babu Surendra Nath Sen Gupta, No. I, Sub-Deputy Collector, Sadar, Jessore, is granted leave on average pay for six weeks, under rule 81 (*b*) (*ii*) of the Fundamental Rules, with effect from the date of his being relieved.

A. J. DASH, *Commissioner (offg.).*

Alipore, the 1st February 1935.

No. 24/35-3-V.S.-G.—It is hereby notified for general information that, under section 13 of the Bengal Village Self-Government Act, 1919 (Bengal Act V of 1919), Munshi Ali Bux Mistry has been duly elected to be a member of the Chandi union board in police-station Bishnupore in the Sadar subdivision of the 24-Parganas district, in the vacancy caused by the death of Munshi Sadaruddin Mistry.

S. N. RAY, *Addl. District Magistrate.*

Orders by the Deputy Inspector-General of Police, Presidency Range.

Calcutta.—No. 675-76.—2nd February 1935.—Babu Akshay Kumar Sikdar, Inspector, Nadia, is granted 4 months' leave on average pay, on medical certificate, under rule 81(*b*)(*ii*) of the Fundamental Rules, with effect from the 1st February 1935.

Sub-Inspector Bhola Nath Trivedi of the 24-Parganas is appointed to act as Inspector in the vacancy.

The transfer is effected in the interests of public service.

L. H. BURTON,

Deputy Inspector-General of Police.

Rajshahi Division—Jalpaiguri.

No. 469J.—6th February 1935.—Under the provision of rule 691, Chapter XVIIA of the Bengal Jail Code, I appoint Swami Gadadharananda to be honorary teacher of the Dinajpur Jail for a period of two years.

No. 473J.—6th February 1935.—Under the provisions of rule 63 (*2*) of Chapter IV of the Bengal Jail Code, I appoint Mr. J. Tarapore as a non-official visitor of the Kurseong Sub-Jail in the district of Darjeeling for a period of two years.

F. W. ROBERTSON, *Commissioner.*

Orders by the Deputy Inspector-General of Police, Rajshahi Range.

Jalpaiguri.—No. 974.—1st February 1935.—Babu Satish Narayan Biswas, Inspector, Dinajpur, is granted 4 months' leave on average pay, on medical certificate, under rule 81(*b*)(*ii*) of the Fundamental Rules, in extension of the leave already granted to him.

The existing acting arrangements will continue.

F. P. WALKER,

Deputy Inspector-General of Police.

Registered No. C207

The Calcutta Gazette

THURSDAY, FEBRUARY 14, 1935.

PART IA

Orders and Notifications by the Government of India republished for general information.

LEGISLATIVE ASSEMBLY DEPARTMENT.

NOTIFICATIONS.

New Delhi, the 26th January 1935.

No. F.-40-I/35-A.—The following order by His Excellency the Viceroy and Governor General, dated Thursday, the 24th January, 1935, is published for general information :—

"In pursuance of the provisions of sub-section (1) of section 63C of the Government of India Act, I, Freeman, Earl of Willingdon, hereby signify that I approve the election by the Legislative Assembly of Sir Abdur Rahim, K.C.S.I., as President of the said Assembly.

WILLINGDON,
Viceroy and Governor General."

NEW DELHI,
The 24th January 1935.

The 28th January 1935.

No. F.-5-I/35-A.—In accordance with the provisions of sub-rule (9) of rule 14 of the Legislative Assembly Electoral Rules, the name of the following candidate who has been declared to be elected as a Member of the said Assembly by the constituency mentioned opposite his name, is hereby published :—

Name.	Constituency.
Babu Amarendra Nath Chattopadhyay.	Burdwan Division (Non-Muhammadan Rural).

MD. RAFI,
Secy. to the Govt. of India.

DEPARTMENT OF INDUSTRIES AND LABOUR.

NOTIFICATION.

New Delhi, the 28th January 1935.

No. M.-1222.—Mr. J. H. Lang, Inspector of Mines, is granted leave out of India on average pay for seven months and ten days with effect from the 16th March 1935 or the subsequent date on which he may avail himself of it.

A. G. CLOW,
Joint Secy. to the Govt. of India.

FOREIGN AND POLITICAL DEPARTMENT.

NOTIFICATIONS.

New Delhi, the 30th January 1935.

No. 85-G.—The Governor-General in Council is pleased to recognise the appointment of Mr. Fernando Menezes Braganca as Acting Vice Consul for Brazil at Calcutta, during the absence of Mr. Hugh V. Simmons.

No. 86-G.—Subject to the confirmation of His Majesty's Government, the Governor-General in Council is pleased to recognise the appointment of Mr. Fernando Menezes Braganca as Acting Consul for Brazil at Calcutta.

H. A. F. METCALFE,
Foreign Secy. to the Govt. of India.

The 30th January 1935.

No. 89-I.B.—In pursuance of the First Schedule to the Indian Extradition Act, 1903 (XV of 1903), the Governor-General in Council is pleased to direct that the following further amendment shall be made in the Notification of the Government of India in the Foreign and Political Department, No. 249-I., dated the 10th May 1933, declaring certain units of the Indian States Forces to be units desertion from which is an extradition offence, namely:—

Under the heading "*Patiala*", the following entries shall be omitted, namely:—

"A" Battery, Patiala Horse Artillery.
"B" Battery, Patiala Horse Artillery.

B. J. GLANCY,
Political Secy. to the Govt. of India.

FINANCE DEPARTMENT (CENTRAL REVENUES).

NOTIFICATION.

CENTRAL EXCISES.

New Delhi, the 9th February 1935.

No. 5.—In exercise of the powers conferred by sections 17 and 18 of the Matches (Excise Duty) Act, 1934 (XVI of 1934), the Governor-General in Council is pleased to direct that the following further amendment shall be made in the Matches (Excise Duty) Order, 1934, namely:—

In the said Order, after clause 34 the following clause shall be inserted, namely:—

34-A. (1) Matches, splints and veneers in respect of which breaches of the Act or of this Order have been committed shall, together with the boxes, packings or wrappings thereof, be liable to confiscation, which may, without prejudice to the provisions of section 15 of the Act, be adjudged subject to the provisions of clause 32 by the Collector:

Provided that when adjudging confiscation the Collector shall give the owner an option to pay in lieu of confiscation such fine, not exceeding one thousand rupees as he thinks fit.

(2) Articles of which confiscation has been adjudged under sub-clause (1) and in respect of which the option of paying a fine in lieu of confiscation has not been exercised shall be sold, destroyed or otherwise disposed of in such manner as the Collector may direct.

(3) Before matches confiscated under sub-clause (1) and ordered to be disposed of in a manner admitting of their passing into consumption, or matches to be returned to the owner in consequence of the exercise of the option conferred by the proviso to the said sub-clause are removed from official control, the Collector shall, if the matches do not bear proper banderols, cause to be affixed thereto proper banderols, which, if he so directs, may be affixed over the manufacturer's label.

A. J. RAISMAN,
Joint Secy. to the Govt. of India.

Registered No. C207

The Calcutta Gazette

THURSDAY, FEBRUARY 14, 1935.

PART IB

Educational Notices.

The Elliott Prize for Scientific Research for 1935—39.

Calcutta, the 15th January 1935.

In accordance with the Government of Bengal, General Department, revised notification No. 112T.Edn., dated the 5th May 1917, published in Part I, page 667 of the *Calcutta Gazette*, 1917, the Elliott Prize for Scientific Research for 1935 will be awarded to the author of the best original essays giving the results of original research or investigation made by the candidate in Geology and Biology (including Pathology and Physiology) and published during the years 1931—34, inclusive.

In accordance with the notification cited above, the Elliott Prize for Scientific Research for 1936 will be awarded to the author of the best original essays, giving the results of original research or investigation made by the candidate in Mathematics and published during the years 1932—35, inclusive.

Any native of Bengal, or Bihar and Orissa, or any Anglo-Indian or domiciled European, residing in Bengal, or Bihar and Orissa, may compete for the prize.

The essays of competitors must be sent in so as to reach the President of the Asiatic Society of Bengal, c/o the General Secretary, 1, Park Street, Calcutta, by the end of June of this year. Author's reprints must be submitted and not manuscripts. The prize will be awarded to the best competitor and be conferred publicly at the Annual General Meeting of the Asiatic Society of Bengal in February 1936.

Preference will be given to researches leading to discoveries likely to develop the industrial resources of Bengal, or Bihar and Orissa.

The value of the prize will not be less than Rs. 210. In the event of no essay being deemed of sufficient merit, no prize will be awarded.

The prizes for the next four years will be allotted as follows:—

1936—Mathematics.

1937—Chemistry.

1938—Physics.

1939—Geology and Biology (including Pathology and Physiology).

All essays submitted must have been published during the four calendar years immediately preceding that for which the prize is given.

L. L. Fermor,
President, Asiatic Society of Bengal.

Syamaprasad Mookerjee,
Vice-Chancellor, Calcutta University.

J. M. Bottomley,
Director of Public Instruction, Bengal.

Presidency Division.

40-1A, Free School Street, Calcutta, the 4th February 1935.

Addenda to the results of the Primary (Maktab) Final Examination, 1934, Jessore district, published in the "Calcutta Gazette", dated the 10th January 1935.

The following candidates are declared to have passed the Primary (Maktab) Final Examination, 1934 :—

(E indicates that the candidate has passed in English.)

Jessore District.

Magura Centre.

Roll. No.	Name.	Division.
	Magura Practising U. P.	
91	Mojaharuddin Molla ..	II
	Hat-dariapur Board U. P.	
94	Tabbar Ali Biswas . .	II

J. G. SEN,
for *Inspector of Schools, Presidency Division.*

Presidency Division.

40-1A, Free School Street, Calcutta, the 24th January 1935.

Results of the Final Examinations of the Guru Training and Moallim Training Schools.

The following candidates are declared to have passed the examinations held in December 1934 :—

Khulna.

Khulna Guru Training School.

1 Jyotish Chandra Sadhu.
2 Sridam Chandra Biswas.
3 Satish Chandra Mazumdar.
4 Sadashib Pramanik.
5 Hem Lal Basu.
6 Esdan Ali Sardar.
7 Md. Velayet Hossain.
8 Moquebular Rahman Khan.
9 Abdul Makid Sardar.
10 Soheluddin Ahmad.
11 A. M. Waezuddin Ahmad.
12 Anseruddin Ahmad.
13 Md. AbdulAziz Mian.
14 Md. Abdul Latif.
15 Birendra Nath Das.
16 Kalipada Mondal.
17 Sarat Chandra Bhakta.
18 Jagadish Chandra Banerjee.
19 Jatindra Nath Das.
20 Bishnu Pada Roy.
21 Prafulla Kumar Mukherjee.
22 Ajit Kumar Basu.
23 Shaikh Abdul Hamid (I).
24 Khondakar Moslehuddin Ahmad.
25 Ghazi Rustam Ali.
26 Md. Hossain Ali.
27 Md. Nazir Hossain.
28 Mir Samsul Huq.
29 Shaikh Tahsenuddin.
30 Sailendra Nath Chakraverty.
31 Md. Jamirul Islam.
32 Shaikh Abdul Hamid (II).
33 Pulin Chandra Roy.
34 Bishnupada Bhadra.
35 Indu Bhuson Roy.
36 Atul Chandra Dutta.
37 Bipin Behari Sarkar.
38 Md. Eusof Ali Mullah.
39 Jogendra Nath Mondal.

Kalaroa Guru Training School.

40 Md. Nesarul Huq.
41 Md. Nuruddin Mallik.
42 Debendra Nath Mandal.
43 Haripada Das.
44 Md. Abu Bakar.
45 Md. Safiuddin Howladar.
46 Harendra Nath Mukherjee.
47 Shaikh Esharat Ali.
48 Bireswar Haldar.
49 Sarfuddin Ahmad.
50 Md. Samir Sana.
51 Menhazuddin Biswas.
52 Pashupati Mitra.
53 Bijoy Krishna Banerjee.

Raripara Guru Training School.

54 Patit Paban Chakraverty.
55 Debendra Nath Haldar.
56 Md. Mobarak Ali Ghazi.
57 Abdus Samad.
58 Abdul Hamid.
59 Sekeluddin Ahmad.
60 Rakhal Chandra Pal.
61 Beni Madhab Maulik.
62 Aslam Mian.
63 Sonamuddin Ahmad.
64 Koshob Lal Das.
65 Santimoy Biswas.
66 Sarat Chandra Ghosh.
67 Md. Rajjab Ali.
68 Nagendra Nath Das.

Private.

1 Md. Akbar Ali Shaikh.
2 Shaikh Abdul Aziz.
3 Kshirod Chandra Das.
4 Shaikh Ershad Ali.
5 Shaikh Mainuddin Ahmad.

Bagerhat Moallim Training School.

1 Md. Mobarak Ali.
2 Md. Nurul Huq.
3 Md. Rowshan Ali.
4 Md. Year Ali Fakir.
5 Shaikh Abdul Bari.
6 Shaikh Azizul Huq.
7 Md. Mafizur Rahman.
8 Mullah Babar Ali.
9 Mullah Siddiq Ahmad.
10 Nezamuddin Ahmad.
11 Md. Abdur Rajjak.
12 Syed Motahar Ali.
13 Md. Abdul Hai.
14 Shaikh Abdul Hakim.
15 Shaikh Roaz Ahmad.

Private.

1 Md. Afsaruddin.

J. M. SEN,
Inspector of Schools, Presidency Division.

Orders by the Vice-Chancellor and Syndicate of the Calcutta University.

Senate House, the 4th February 1935.

NOTIFICATION No. T. 390.

B.A. AND B.Sc. EXAMINATIONS, 1937.

[In all cases where reference is made to Chapters, Sections, Pages or Lines (*e.g.*, "Chapters I-III"), the reference is to be understood as inclusive.]

English.

TEXT-BOOKS.

Pass Course.

Shakespeare. Macbeth (Edition by H. M. Percival is recommended).
Shakespeare. Merchant of Venice.
Palgrave's Golden Treasury, Book IV (Ed. Wheeler, Oxford University Press).
Goffin. Six Short Biographies (Oxford University Press).
A Book of Essays (published by the University). Essays to be read will be selected later.
Dickens. Tale of Two Cities.
B. A. Bible Selections (Revised Edition—published by the University)—portion to be read will be selected later.

Honours Course.

Shakespeare. King Lear.
Milton. Paradise Lost, IV.
Palgrave. Golden Treasury, Additional Poems (Ed. Wheeler, Oxford University Press). Pieces to be read will be selected later.
Bacon. Advancement of Learning, Book I.
Lytton Strachey. Eminent Victorians (omitting Cardinal "Manning").
The following books are prescribed as text-books for studying the Philology of the English Language and the History of English Literature :—
Jesperson. Growth and Structure of the English Language (Blackwell).
Legouis. A Short History of English Literature (Clarendon Press, Oxford). (A general acquaintance with certain authors, to be specified later on, will be required.)

Alternative Paper in English.*

Selected Essays of Augustine Birrel, edited by Wodehouse (Oxford University Press).
Methuen. An Anthology of Modern English Verse—pieces to be read will be selected later.

Vernaculars.

Bengali.

(Vernacular.)

TEXT-BOOKS.

Bankimchandra Chatterjee. Kapalkundala.
Michael Madhusudan Datta. Meghnad Badha Kavya, Canto IV.
Sir Asutosh Mookerjee. Jatiya Sahitya.
Rabindranath Tagore. Gandharir Abedan.
Isanchandra Ghosh. Selections from Jataka (published by the University).

*To be taken up by candidates whose Vernacular is a language not included in the prescribed list given under section 6 (2) of Chapter XXXII of the Regulations.

The following books are recommended as showing the standard up to which candidates will be expected to have read:—

Sivanath Sastri. Ramtanu Lahiri O Tatkalin Bangasamaj.
Rabindranath Tagore. Jibansmriti.
Girischandra Ghosh. Bilwamangal.
Chandicharan Banerjee. Vidyasagar.
Ramendrasundar Trivedi. Jijnasa.
Pramodanath Sen. Priya Puspanjali.

Alternative Paper in Bengali.

(To be taken up by candidates who take up Bengali as Second Language.)

TEXT-BOOKS.

(History of Literature—45 marks.)

D. C. Sen. Bangabhasa O Sahitya, edition of 1334 B. S., the following portions only:—

Chapter VI (Gauriya Yuga), pages 190-250.
Chapter VII (Sree Chaitanya Sahitya), pages 251-356.
Sukumar Sen. Bangala Sahitya Gadya.

(History of Languages—25 marks.)

D. C. Sen. Bangabhasa-o-Sahitya, Chapters I, II and III.
Bijaychandra Majumdar. History of Bengali Language (Lectures 1, 5, 6, 7, 8, 9 and 14).
Sunitikumar Chatterji. Bangla Bhashatatwer Bhumika (latest edition) (published by the University).

(Essay—30 marks.)

Hindi.

(Vernacular.)

TEXT-BOOKS.

Hindi Nibandha Mala, Vol. I. Nagri Pracharini Sabha.
Kavitawali Ramayan by Tulsidas.
Shiva Bawani. Bhushan (Sammelana edition).
Ajat Shatru. Jai Shanker Prasad.
Vishwa Sahitya. Padam Lall Panna Lall Bakshi.

The following books are recommended to indicate the standard up to which students will be expected to have read:—

Garh Kundar. Virudawan Lall Verma.
Wees Kahaniya. Ramchandra Tondon.
Pratap Fiyash. Prof. Ramakanta Tripathi.

Alternative Paper in Hindi.

(To be taken up by candidates who take up Hindi as Second Language).

TEXT-BOOKS.

[(*a*) History of Literature—45 marks.]

1. Hindi Shahitya Ka Samkshipta Itihas. Rai Bahadur B. Shyam Sunder Dass (Nand Dulare Bajpai).
2. Hindi Sahitya Vimarsha. Padam Lall Panna Lall Bakshi.

[(*b*) History of Language—25 marks.]

1. Hindi Bhasha Ka Vikas. R. B. Shyam Sunder Dass.
2. Bhasha Vigyan Ki Upakramanika. Nalini Mohan Sanyal.

[(*c*) Essay—30 marks.]

Urdu.

(Vernacular.)

(To be notified later.)

Alternative Paper in Urdu.

(To be notified later.)

Uriya.

(Vernacular.)

TEXT-BOOKS.

Prose.

Biswanath Kar. Bibidha Prabandha.
Fakirmohan Senapati. Mamu.

Poetry.

Madhusudhan Rao. Nilachal (Kavya).

Assamese.

(Vernacular.)

TEXT-BOOKS.

Prose.

Sankardev. (Chapters 2, 3, 4, 5, 6, 7, 8, 9, 10, 11), by L. N. Bezbaruah Chinta Kolee, by Satyanath Borah.

Poetry.

Rukminiharan Nat, by Sankardev, published by the Calcutta University.
Prahlad Charitra, by Hem Saraswati, edited by Kaliram Medhi.
Ketaki, by Raghunath Chaudhury.

Maithili.

(Vernacular.)

TEXT-BOOKS.

Parijat Haran, by Umapati (edited by Dr. Grierson).
Ramayana, by Chanda Jha.
Vidyapati Kirtilata (edited by Baburam Sakshena, M.A.).
Anandavejaya Natak (edited by Mahon Jha).
Govinda Das Padavali (published by Hindi Pustak Bhandar, Laheriasarai, Darbhanga).
Presidential address of Dr. Umesa Misra in the Maithili Sahitya Parishad.

Nepali.

(Vernacular.)

TEXT-BOOKS.

Drama—Mirtu-Ko-Byatha—by Captain Balkrishna Shumshere Jung Bahadur Rana, Nepal.
Vikramorvashi—by General Kaisher Shumshere Jung Bahadur Rana, Nepal.

Poetry.

Bhanubhakta's Ramayan—Yudda and Uttarkanda, Mr. S. B. Gemati's edition.

Prose.

Chandrasekhar—by Gambhir Bhoj Shah.

Books recommended for general reading—

Alankar Chandroday—by Pandit Kulachandra Gautam.
Goraksha Prabandha Rachana Siksha, Part II, by the Gorakha Bhasha Prakashini Samiti, Nepal.

Burmese.

(Vernacular.)

TEXT-BOOKS.

U. Ponna Myttaza; U. Kyin Padeta Thigyin Saddan Hsinmin Wottu.

Telugu.

(Vernacular.)

TEXT-BOOKS.

Poetry.

Bharatanu-Abhimanyu—V. R. Sestralu and Sons, Madras.

Prose.

Harsha Charitram—Medapalli Venkataramanacharyulu, Vizianagram.

Drama.

Chitramailyam—B. Krishnamachryulu—V. R. Sastrulu and Sons.

Khasi.

(Vernacular.)

TEXT-BOOKS.

Job in Khasi.
Zab Nian Khoin Ki Khael—by Rabon Singh.
Amblang Nongkrem Bad Ka Thang Syiem Sohra—by Dr. Lyngdoh.
Niam-Ki-Khasi—by Shib Charan Roy.

Sinhalese.

(Vernacular.)

TEXT-BOOKS.

Amavatura, Chapters 13 and 14 only; Sinhalese translation of Ambattha Sutta, by W. A. Samarasekhara; Pali Tripitaka Dharma, Part 1; Kavya Sekhara, Chapters I and II only. Mavadevdavata 101-150 verses only.

Tamil.

(Vernacular.)

TEXT-BOOKS.

Madras University Selections for 1937.

Malayalam.

(Vernacular.)

TEXT-BOOKS.

Badhira vilapam—by V. H. Menon (Malayala Manorman Press, Kottayam, Travancore).
Marthanda Varma—by C. V. Raman Pillay (B. V. Book Depot, Trivandrum).
Karuna—by N. Kumarau Asan (B. V. Book Depot, Trivandrum, Travancore).

Kanarese.

(Vernacular.)

TEXT-BOOKS.

Prose.

Ramaswamodha Sara Sangraha, by M. P. Pujar (Training College, Dharwar); Pancha Patra, by Vidwan P. Simder Sastriar (B. M. Nath and Co., Vepary, Madras); Aryya Kirti, Part II, Chhatrapathi Sivaji, by C. Vasudevaiya (Malleswaram, Bangalore).

Poetry.

Raja Bhakti Kavya, by B. Narahari Sastriar (M. S. Rao and Co., Bangalore City); Kavyasara, by Abhinava Vadi Vidyananda, Chapters 2, 3 and 4 (Kavyakalanidhi Office, Mysore); Subhadra Vijaya Nataka, by S. B. Rama Rao, M.A., LL.B. (Raja Sahitya Mandala, Mangalore).

Modern Tibetan.

(Vernacular.)

TEXT-BOOKS.

Pogsam Thishing, the last two Chapters. Drowa Zangmo's Namthar (Asiatic Society of Bengal's Publication).

Guzrathi.

(Vernacular.)

TEXT-BOOKS.

K. R. Munshi. Prithivi Ballabh.
Khan Saheb and N. Trikamal. Sahityaratna (Poetical Selections from Classical Poets up to 1850).

Marathi.

(Vernacular.)

TEXT-BOOKS.

Prose.

N. C. Kelkar—Subhasit ani Vinoda.
K. P. Kulkarni—Bhasha Shastra and Marathi Bhasha.
Dhondo Keshav Karve—Atmavritta.
Vaman Molhar Joshi—Nitirsastra Pravesa.

Poetry.

Navanit—Seventh Edition, pages 1-143.

Modern Armenian.

(Vernacular.)

TEXT-BOOKS.

(For the years 1936 and 1937.)

Prose.

Papazian's History of Armenian Literature, pages 1-334.

Poetry.

Poems in Hai Groghner, Part II, pages 1-217.

Portuguese.

(Vernacular.)

Prose.

OMonge de Cister, by Alexandre Merculano.

Poetry.

Sonetos, by Antero De Quental.

Second Languages.

Sanskrit.

TEXT-BOOKS.

Pass Course.

Paper I.

Manusamhita, Chapter VII. A knowledge of Kulluka's Commentary will be expected.
Bharabi—I and II.

Paper II.

Abhijnana Sakuntalam.
Uttara Ramacharitam.

Paper III.

Students are recommended to consult the following books:—
Winternitz. History of Indian Literature, Vol. I (published by the University), omitting the Chapters on Vedic Literature.
Keith. Classical Sanskrit Literature (Oxford University Press).

Honours Course.

(In addition to the books prescribed for the Pass Course.)

Paper IV.

Bhattikavyam, Canto XII.
Kadambari, pages 1-24 (Bombay Sanskrit Series—Peterson's Edition).

Paper V.

Selections from the Vedas (to be published by the University). Pieces to be read will be selected later.
Students are recommended to consult the following books:—
Macdonell. Vedic Grammar for Students.
Winternitz. History of Indian Literature, Vol. I (published by the University, Vedic period only).

Paper VI.

Siddhanta Kaumudi, Karaka and Samasa.
Dandi, Kavyadarsa.
Sahityadarpana, Chapter VI.

Persian.

(To be notified later.)

Arabic.

(To be notified later.)

Pali.

(Second Language.)

TEXT-BOOKS.

B. A. Pali Selections (published by the University)—pieces to be selected later.

Greek.

Pass Course.

Herodotus V.
Aristophanes. Cluds.
Homer. Odyssey IX.

Honours Course.

(In addition to the books prescribed for the Pass Course.)

Aeschylus. Prometheus Vinctus.
Thucydides. Book I.
Plato. Phaedo.

Latin.

Pass Course.

Cicero. Against Antony II.
Livy. Book I.
Virgil. Georgics, III and IV.

Honours Course.

(In addition to the books prescribed for the Pass Course.)

Lucretius. Book V.
Tacitus. Annals I.
Terence. Adelphi.

French.

Pass Course.

(1) Racine: Alexandre.
(2) La Rochefoucauld: "Maxims."
(3) Anatole France—Le Crime de Selvestre Bouhard.

The course includes, in addition to the prescribed texts, Grammar and the Outlines of French History.

Honours Course.

(In addition to the books prescribed for the Pass Course.)

Victor Hugo. Hernani (Blackie).
Moliere. L'avare.
Michelot Louis XI et Charles le Temeraire (Clarendon Press).

The course includes the History of the French Literature of the period 1600-1838.

German.

Pass Course.

Kourad Ferdinand Meyer. Jurg Jenatsch—adapted and edited by W. Ahrens, M.A. (Lond.) (Macmillan & Co., Ltd.).
Schiller. Maria Stuart.
Grillparzer. Ernst Herzog von Schwaben.

The course includes, in addition to the prescribed texts, Grammar and the Outlines of German History.

Honours Course.

(In addition to the books prescribed for the Pass Course.)

Goethe. Iphigenie auf Taurus.
Lessing. Nathan der Weise.
Paul Heyse. Kinder der Walt.

The course includes, in addition to the prescribed texts, Grammar and the Outlines of German History and also the elements of German Philology and the History of the German Literature for the period 1750-1882.

Hebrew.

Pass Course.

I. Kings.
Psalms, 72-112.
Proverbs, Chapters 1 to 20.

The course includes Jewish History.

Honours Course.

(In addition to the books prescribed for the Pass Course.)

Two of the Prophets, *viz.*, Jeremiah and Amos.

N. B.—Dr. Ginsburg's edition (British and Foreign Bible Society) is recommended.

Syriac.

Pass Course.

Paper I.

The book of Liviticus (the Peshitto Version).
The Epistle to the Hebrews (the Peshitto Version).

Paper II.

Mar Ephraem. Epistle to Montanus (Opera Selecta Overbeg).
The Liturgy of St. James.
The Book of the Dead.

Paper III.

Wright. History of Syriac Literature.
Recommended—Nöldeke. Compendious Syriac Grammar.

Honours Course.

(In addition to the books prescribed for the Pass Course.)

Paper IV.

Philexinos Mabogh. Discourses on Poverty (Royal Society of Literature).
Chronicles of Bar. Hebraeus (Bernstein's Crestomathie).

Paper V.

Select Narratives of Holy Women Eugenia (Studia Sinaitica No. IV).
Eusebius. Ecclesiastical History, Books I-III (Wright and Maclean).

Paper VI.

A. Fortescue. The Orthodox Eastern Church.
A. Fortescue. Lesser Eastern Churches.

Italian.

(To be notified later.)

Classical Armenian.

(To be notified later.)

Bengali.

(As Second Language.)

TEXT-BOOKS.

Paper I.

(Drama Texts—75 marks.)

Rabindranath Tagore. Tapati.
Girischandra Ghosh. Buddhadeb.

Recommended for reference—

Hemendranath Dasgupta. The Indian Stage.

(Rhetoric and Grammar—25 marks.)

Recommended books—

Mahamahopadhyay Sitikanta Vachaspati. Alankara Darpan.
Lalmohan Vidyanidhi. Kavyanirnaya.
Nakuleswar Vidyabhushan. Bangla Vyakaran (Latest revised edition).
Sunitikumar Chatterji. Bengali Self-taught (Grammar portion only).

Paper II.

(Old Poetry Texts—50 marks.)

Vaishnava Padabali (published by the University)—the whole book.
Kavikankan Chandi, Part II, beginning with Srimanter Janma (pages 703-1019).
Bharatchandra. Annadamangal (Vyaskasi).

(Modern Poetry Texts—50 marks.)

Michael Madhusudan Dutt. Brajangana.
Rabindranath Tagore. Sanchayita—pieces to be read to be selected later.
Nabinchandra Sen. Raibatak.

Paper III.

[Prose Texts (Old and Modern)—80 marks.]

Old Prose Texts.

Tarasankar Kaviratna. Kadambari, Purvabhag.
Tekchand Thakur. Alaler Gharer Dulal.

Modern Prose Texts.

Bankimchandra Chatterjee. Krishnakanter Will.
Saratchandra Chatterjee. Datta.
Rajkrishna Mukherjee. Nana Prabandha—pieces to be selected later.

(Translation from English into Bengali—20 marks.)

Hindi.

(As Second Language.)

TEXT-BOOKS.

[*Paper I*—(*a*) Drama Texts—25 marks.]

1. Janmejaya ka Nagyajnya—Jaishanker Prasad.
2. Sanyasi—Laxmi Narain Misra.

[(*b*) Rhetoric and Grammar—25 marks.]

1. Alankar Chandrika—Lala Bhagwandin.
2. Sankshipta Hindi Vyakaran—Kamta Prasad Guru.
3. Saral Hindi Vyakaran—Shiva Narayan Lala.

(*Paper II—Old Poetry Texts*—50 marks.)

1. Brajamadhuri Sar—Nanddas—Raskhan (1-36 pieces)—Bihari (1st 42 pieces)—Deva (1st 43 pieces except 5, 11, 14, 20, 21, 25, 26 and 28) and Anandghan (Sujan Sagar).
2. Vidyapati Padawali—Laheriya Sarai edition.

(*i*) Vandana, (*ii*) Vasant, (*iii*) Vivah and (*iv*) Prarthna aur Nachari.

(*Modern Poetry Texts*—50 marks.)

1. Priya Pravas 1st four cantos—Hariaudh.
2. Navin Padya Sangrah—(Hindi Sahitya Sammelan).

(Selected pieces to be notified.)

[*Paper III.—Prose Texts (Old and Modern*—80 marks).]

Old Text.

Ashtachhap—Dhirendra Verma.

Modern Texts.

Rasajnya Ranjana—Mahabir Prasad Dwivedi.
Bhikarini (a novel)—Vishwambhar Nath Sharma "Kaushika."
Prem Chand's five short stories—

1. Bank ka Diwala.
2. Shanti.
3. Burhi Kaki.
4. Atma Ram.
5. Shankhanad.

(Translation from English into Hindi—20 marks.)

Urdu.

(As Second Language.)

(To be notified later.)

Mental and Moral Philosophy.

Books recommended to be used in studying the subject in accordance with the Syllabus:—

PSYCHOLOGY.

Pass and Honours.

Hoffding. Outlines of Psychology.
Stout. Manual of Psychology.
James. Text-book of Psychology.
Stephen. Elements of Analytical Psychology (latest edition).
A. C. Mitra. Elements of Psychology (two volumes).
S. C. Sen. Text-book of Psychology.
Angell. Psychology.
McDougall. Outlines of Psychology.

Preparatory Reading.

Students are advised to read the following books before joining the regular class:—

Titchener. Primer of Psychology.
McDougall. Psychology (Home University Library).
S. C. Datta. Psychology for Beginners.

ETHICS.

Pass and Honours.

Seth. Study of Ethical Principles.
Mackenzie. Manual of Ethics (latest edition).
A. C. Mitra. Elements of Morals.
Muirhead. Elements of Ethics.

Preparatory Reading.

Students are advised to read the following books before joining the regular class:—

Mohitchandra Sen. Elements of Moral Philosophy.
P. B. Chatterjee. Principles of Ethics.
Abhaykumar Majumdar. Outlines of Moral Philosophy.

GENERAL PHILOSOPHY.

Pass and Honours.

Marvin. Introduction to Philosophy.
Paulsen. Introduction to Philosophy.
Stephen. Problems of Metaphysics.
J. Watts Cunningham. Problems of Philosophy.
P. B. Chatterjee. Outlines of General Philosophy.

Preparatory Reading.

Students are advised to read the following book before joining the regular class:—

Patrick. Introduction to Philosophy.

NATURAL THEOLOGY.

Honours.

Martineau. Study of Religion.
Flint. Anti-Theistic Theories.
Pringle-Pattison. Idea of God.
John Caird. Introduction to the Philosophy of Religion.
Waterhouse. Philosophical approach to Religion.
Edward. Philosophy of Religion.

Preparatory Reading.

Students are advised to read the following book before joining the regular class:—
Illinworth. Personality, Human and Divine.

HISTORY OF PHILOSOPHY.

The following books are recommended:—

Weber and Pery. History of Philosophy.
Falckenberg. History of Modern Philosophy.
Thilly. History of Philosophy (Bell and Sons).

Books recommended for preparatory reading:—

Schwegler. History of Philosophy.
Roger. History of Philosophy.

Special Texts prescribed:—

Hume. Enquiry concerning Human Understanding.

History.

Pass Course.

Note.—A knowledge of Historical Geography and Map Drawing is required.

Books recommended to be used in studying the subject in accordance with the Syllabus.

Paper I.

(Indian History.)

Smith, V. A. The Oxford History of India, Ancient and Mediaeval Periods (Oxford University Press).
Roberts, P. E. History of British India (Oxford University Press).

Paper II.

(European History, 1648-1815.)

Sacret. Bourbon and Vasa, 1610-1715.
Guedalla. Partition of Europe, 1715-1815.

Paper III.

(General History from 1815 to 1919, with special reference to Europe.)

Ketelbey, D. M. A History of Modern Times (Harrap).

N. B.—Students will be expected to consult Historical Atlas of Modern Europe, 1789-1922, by Robertson and Bartholomew.

Honours Course.

(In addition to the books recommended for the Pass Course.)

N. B.—The subjects are to be studied with some reference to original sources.

Paper I.

Dodwell. Sketch of the History of India from 1858-1918.
Raychaudhuri, H. C. Political History of Ancient India (latest edition), published by the University (from the 6th century B. C. to the fall of the Guptas).

Books recommended to be used for reference:—

Sarkar and Dutta. Text-book of Modern Indian History.
R. D. Banerjee. Pre-historic, Ancient and Hindu India.

Paper II.

Wakeman. Ascendency of France.
Hassal. The Balance of Power.

Paper III.

Fueter. World History, 1815-1920.
Gooch. History of Modern Europe, 1878-1919.

Paper IV.

(Indian History—Special Periods.)

One of the following two subjects:—

A—The Maurya Age.

Books recommended and original sources indicated:—

Bhandarkar. Asoka (including English translations of the inscriptions of Asoka).
McCrindle. Megasthenes and Arrian.

B—Akbar.

Books recommended—

Smith, V. A. Akbar, the great Moghul.

Original sources indicated.

Ain-i-Akbari, by Abul Fazl-Alami, Volumes I and II, translated by Blochmann and Jarrett.

Paper V.

One of the following two subjects:—

(*a*) Europe from the accession of Charlemagne to the fall of the Hohenstanfen.

Sources.

Henderson. Historical Documents of the Middle Ages, Book III, relevant Sections III and IV.
Orton. Outlines of Mediaeval History.
Bryce. The Holy Roman Empire, Chapters VII, XI-XIII.
Fisha. The Mediaeval Empire.

(*b*) Europe in the age of the Reformation, 1494-1551.

Sources.

Robinson. Readings in European History, Volume II, relevant Chapters.
Lindsay. History of the Reformation.

Paper VI.

One of the following four subjects:—

(*a*) Greek History—The Peloponnesian War, 433-404 B. C.—

Thucydides. History of the Peloponnesian War (Everyman Library).
Cambridge Ancient History, Volume V.
Grote. History of Greece (Ed. Mitchall and Caspari)—relevant Chapters.

(*b*) Roman History—The First two Punic Wars, 264-202 B. C.—

Polybius. Books I-III, VI, VII 1-9, VIII 1-9, 26-37, IX 3-11, 22-26, X 1-20, 32-40, XI 1-3, 20-33, XIV 1-10, XV 1-19 (translated by Shuckburgh).
Cambridge Ancient History, Volume VII, Chapters XXI, XXIV; Volume VIII, Chapters I-IV.
Mommsen. History of Rome, Book III, Chapters 1-6.

(*c*) History of Islam outside India—

Umayyed in Spain, 755-1031 A.D.

Books recommended—

1. Alamgari (English translation).
2. Ibn-i-Khalldun.
3. Dozy's Spanish Arabs.
4. Amir Ali's History of Saracens.

(*d*) History of Hindu Colonial Expansion outside India—

Special Period—History of Hindu Expansion in Java, Cambodia and Champa, 500-1200 A. D.
Eliot. Hinduism and Buddhism, Volume III, Book V.
R. C. Majumdar. Champa.
B. R. Chatterjee. Indian Cultural Influences in Cambodia (published by the University).
B. K. Chatterjee and N. P. Chakravarti. India and Java.

Linguistics.

(To be notified later.)

Political Economy and Political Philosophy.

Pass Course.

Paper I.

Seligman. Principles of Economics.
Marshall. Economics of Industry.

Paper II.

Woodrow Wilson. The State (Edition, 1919), Chapters I-V, XXI-XXII and the constitutions of England, France and United States.
R. N. Gilchrist. Principles of Political Science.
Lahiri and Banerjee. Indian Constitution.
T. B. Sapru. Indian Constitution (National Secretary's Office, Adyar, Madras).

Paper III.

P. N. Banerjea. Study of Indian Economics.
K. B. Saha. Economics of Rural Bengal.

Honours Course.

(In addition to the books recommended for the Pass Course.)

Paper I.

Taussig. Principles of Economics.

Paper II.

Garner. Political Science and Government.
Lasky. Introduction to Politics.
Delisle Burns. Political Ideals.

Paper III.

Beri and Jather. Indian Economics, Volumes I and II.

Paper IV.

Dalton. Public Finance.
Robertson. Money.
Hartley Withers. The Meaning of Money.

Paper V.

Aristotle. Politics.
Mill. Representative Government.

Paper VI.

ESSAY.

The following books are recommended for reference:—

Marshall. Principles of Economics.
Carver. Distribution of Wealth.
Bastable. International Trade.
Henderson. Supply and Demand.
Robertson. Control of Industry.
Harrod. Introduction to Economics.
Edie. Money, Credit and Prices.
Pollock. History of the Science of Politics.
Leacock. Principles of Political Science.
Lasky. Grammar of Politics.
Ramsay Muir. Independent World.
Hearnshaw. Democracy at the Grossways.
J. N. Keynes. Scope and Method of Political Economy.
Palgrave. Dictionary of Political Economy.
Plehn. Science of Public Finance.

Gettell. Leadings in Political Science.
Brown. English Political Theory.
P. Mukherjee. Indian Constitutional Documents.
P. Mukherjee. Indian Constitution.
A. K. Ghosh. Public Administration in India (published by the Calcutta University).
Montagu-Chelmsford. Report on Indian Constitution.
Report of the Royal Commission on Agriculture.
Report of the Indian Fiscal Commission.
Report of the Indian Industrial Commission.
Report of the Taxation Enquiry Committee.
Report of the Simon Commission, Volume I.
Report of the Central Banking Enquiry Committee.
Report of the Royal Commission on Labour in India.
Reports of the Herschell Committee, Fowler Committee, Chamberlain Commission, Babington-Smith Committee and Hilton-Young Commission (published in one Volume by the Government of India).

Mathematics.

No text-books are prescribed. The subject is to be taught in accordance with the syllabus prescribed in the Regulations.

The following books are recommended :—

Pass Course.

1. Higher Plane Trigonometry—

Todhunter—Plane Trigonometry. Edited by Hogg.
Loney—Plane Trigonometry.
B. C. Das and B. N. Mukherjee—Higher Trigonometry.

2. Plane Analytical Geometry—

C. Smith—Elementary Treatise on Conic Sections.
Loney—Elements of Co-ordinate Geometry.
Upendranath Ray—Analytical Conics.
Harendranath Datta—Analytical Conics.

3. Differential calculus—

Ganesh Prasad—Differential Calculus, excluding Chapter I and Appendices.
Lamb—Infinitesimal Calculus.

4. Integral Calculus and Differential Equations—

Edwards—Integral Calculus for Beginners.
Ganesh Prasad—Integral Calculus.

5. Hydrostatics—

D. K. Sen—Hydrostatics.
Loney—Elements of Hydrostatics.

6. Astronomy—

D. N. Mallik—Elements of Astronomy.
Parker—Astronomy.
Students are recommended to read Tancock's Descriptive Astronomy as an introduction to the subject and to use "Stars in the Northern Tropics," by T. Bhattacharyya.

Honours Course.

1. Higher Algebra—

Hall and Knight—Higher Algebra.
C. Smith—A Treatise on Algebra.

2. Elementary Theory of Equations—

Raicharan Biswas—Theory of Equations and Complex Variables.
Burnside and Panton—Theory of Equations, Volume I.

3. Higher Plane Trigonometry—

Todhunter—Plane Trigonometry. Edited by Hogg.
Hobson—Treatise on Trigonometry. Chaps. XII and XIII.
B. C. Das and B. N. Mukherjee—Higher Trigonometry.

4. Plane Analytical Geometry—

C. Smith—Elementary Treatise on Conic Sections.
Salmon—Conic Sections.
Askwith—Plane Co-ordinate Geometry.
Upendranath Ray—Analytical Conics.

5. Elementary Solid Geometry—

C. Smith—Elementary Treatise on Solid Geometry.
Bell—Analytical Geometry of Three Dimensions.

6. Elementary Principles of Vector and Vector Analysis—

A. S. Hardy—Elements of Quarternions.
Weatherburn—Elementary Vector Analysis.

7. Differential Calculus—

Edwards—Treatise on Differential Calculus.
Williamson—Differential Calculus.
Ganesh Prasad—Differential Calculus.

8. Integral Calculus and Differential Equations—

Williamson—Integral Calculus.
Murray—Introductory Course in Differential Equations.

9. Statics—

Minchin—Statics, Volume I.
Loney—Statics.
Routh—Statics, Volume I.

10. Dynamics of a Particle—

Loney—Dynamics of a Particle.
Tait and Steele—Dynamics of a Particle.
Ramsey—Dynamics of a Particle.

11. Hydrostatics—

D. K. Sen—Hydrostatics.
Greaves—Hydrostatics.

12. Astronomy—

Barlow and Bryan—Astronomy.

Students are recommended to read Tancock's Descriptive Astronomy as an introduction to the subject and to use "Stars in the Northern Tropics," by T. Bhattacharyya.

Experimental Psychology.

1. GENERAL PSYCHOLOGY.

Woodworth. Psychology.
Lickley. The Nervous System (Longmans & Co.).
Angell. Psychology.

Preparatory Reading.

Students are advised to read Ogden—Meaning of Psychology before joining the regular class.

2. EXPERIMENTAL PSYCHOLOGY.

Titchener. Text-book of Psychology.
Collins and Drever. Experimental Psychology.

Preparatory Reading.

Students are advised to read Titchener's Primer of Psychology before joining the regular class.

Laboratory Course.

Sanford. A Course in Experimental Psychology.
Titchener's Experimental Psychology, Volume I, Part I (Students' Manual Qualitative).
Collins and Drever. A First Laboratory Guide in Psychology.

Honours Course.

The following books are prescribed to be read in addition to the books prescribed for the Pass Course :—

1. GENERAL PSYCHOLOGY.

Stout. Manual of Psychology (latest edition).
Pilsbury. History of Psychology (Modern Period).

2. PHYSIOLOGICAL AND COMPARATIVE PSYCHOLOGY.

Watson. Psychology from the stand-point of a Behaviorist.
McDougall. Physiological Psychology (Temple Classical Series).
Lloyd Morgan. Comparative Psychology.
Holmes. Evolution of Animal Intelligence.
Hart. Psychology of Insanity.

3 and 4. EXPERIMENTAL PSYCHOLOGY.

Scripture. New Psychology.
Myers. Text-book of Experimental Psychology, Part I.

Laboratory Course.

Myers. Text-book of Experimental Psychology, Part II.
Titchener. Experimental Psychology (Students' Manual, Volume II, Part I, Quantitative).

Chemistry.

Books recommended to be used by students in studying the subject in accordance with the Syllabus :—

Pass Course.

H. K. Sen. Introduction to Chemistry.
Partington. Inorganic Chemistry.
Meller. Inorganic Chemistry.
Riesenfeld. A Manual of Practical Inorganic Chemistry (translated by Mr. P. Ray).
Perkin and Kipping. Organic Chemistry.
Caven and Landor. Systematic Inorganic Chemistry.
J. B. Cohen. Theoretical Organic Chemistry.
J. Walker. Introduction to Physical Chemistry.
G. Senter. Outlines of Physical Chemistry.
F. Mollow Perkin. Qualitative Chemical Analysis (Organic and Inorganic).
Caven. Quantitative Chemical Analysis, Part I.
Lowry and Sugden. Class Book of Physical Chemistry.

Honours Course.

(In addition to the books recommended for the Pass Course.)

F. Ephraim. A Text-book of Inorganic Chemistry (Translated by P. C. L. Thorner, 1930, latest edition).
Bernthsen. Organic Chemistry (revised by Sudborough), edition of 1931.
Schmidt. Organic Chemistry, translated by Rale.
Taylor. Elementary Physical Chemistry.
Lowry. Inorganic Chemistry, 1931.
Butler. Chemical Elements and their Compounds.
Treadwell and Hall. Quantitative Analysis, Volume II, revised by Hall.
Partington and Tweedy. Calculation in Physical Chemistry (Blackie & Son, Limited).
Getman. Outlines of Theoretical Chemistry.

Physics.

Books recommended to be used by students in studying the subject in accordance with the Syllabus:—

Pass Course.

Watson. Text-book of Physics.
T. Mandal. A Text-book of General Physics.
Draper. Heat.
Edser. Light.
A. C. Dutt. Text-book of Sound.
Hadley. Magnetism and Electricity for Students.
Meghnad Saha and Srivastava. A Text-book of Heat for Junior Students.
Janucey. Modern Physics.
Allen and Moore. A Text-book of Practical Physics (Macmillan & Co.).

Honours Course.

(In addition to the books recommended for the Pass Course.)

Edser. General Physics.
Poynting and Thomson. Heat.
Burton. Sound.
Houston. Light.
S. C. Starling. Electricity and Magnetism.
Hoare. Thermodynamics.
Preston. Light.
Newman and Scarle. General Physics.
Pohl. Physical Principles of Electricity and Magnetism.
Preston. Heat.
A. B. Wood. Text-book of Sound.
Meghnad Saha and N. Srivastava. Text-book of Heat.
Roberts. Text-book of Heat and Thermodynamics.

Practical.

Watson. Practical Physics.
Glazebrooke and Shaw. Practical Physics.
Warsnop and Flint. Practical Physics.

Botany.

Books recommended to be used by students in studying the subject in accordance with the Syllabus:—

Pass Course.

G. C. Bose. A Manual of Indian Botany.
D. R. Banerjee. Botany for Students.
Small. Text-book of Botany.

Practical.

McDougall. Practical Plant Physiology (smaller book).
Strassburger and Hillhouse. Practical Botany, latest edition.
Analytical Key of Natural Orders (published by the Calcutta University).

Plants should be referred to the following list of Natural Orders:—

Thalamiflorae. Ranunculaceae, Magnoliaceae, Anonaceae, Nymphocaceae, Papaveraceae, Cruciferae, Capparidaceae, Portulacaceae, Dipterocarpaceae, Malvaceae, Sterculiaceae, Tilliaceae.

Disciflorae. Rutaceae, Ampelideae, Sapindaceae, Anacardiaceae.

Calyciflorae. Leguminosae, Rosaceae, Myrtaceae, Melastomaceae, Passifloraceae, Cucurbitaceae, Umbelliferae.

Inferae. Rubiaceae, Compositae.

Surperae. Oleaceae, Apocynaceae, Asclepiadeae, Gentianaceae, Boraginaceae, Convolvulaceae, Solanaceae, Scrophulariceae, Acanthaceae, Vervenaceae, Labiatae.

Incompletae. Nyctaginaceae, Amarantaceae, Polygonaceae.

Unisexuales. Euphorbiaceae, Urticaceae.

Gymnosperms. Coniferae (Gnetaceae and Cycadaceae for Honours).

Microspermae. Orchidaceae.

Epigyneae. Scitamineae, Amaryllidaceae.

Coronariae. Liliaceae, Commelinaceae.
Calycinae. Palmaceae.
Nudiflorae. Aroideae.
Apocarpae. Alismaceae.
Glumaceae. Cyperaceae, Gramineae.

Honours Course.

(In addition to the books recommended for the Pass Course.)

Strassburger: Text-book of Botany (6th English edition).
Reynolds Green, J. Vegetable Physiology.
M. C. Stopes. Ancient Plants.
E. A. N. Arber. Glossopteris Flora.
Stevens. Physiological Anatomy of Plants.

Students are recommended to consult—

Schimper, A. F. W. Geography of Plants.
Jost. Plant Physiology.

Physiology.

Books recommended to be used in studying the subject in accordance with the Syllabus:—

Pass Course.

Halliburton. Handbook of Physiology.
Bainbridge and Mensies. Essentials of Physiology (latest edition).

Practical.

Schafer. Essentials of Histology.
Halliburton. Essentials of Chemical Physiology.
Schafer. Experimental Physiology.
Cole. Practical Physiological Chemistry.

Honours Course.

(In addition to the books recommended for the Pass Course.)

Howell. Text-book of Human Physiology.
Starling. Principles of Human Physiology (latest edition).

Books recommended for consultation:—

Lovatt Evans. Recent Advances in Physiology (latest edition).
Pryde. Recent Advances in Bio-Chemistry (latest edition).
McLeod. Physiology and Bio-Chemistry in Modern Medicine.

Geology.

Pass.

C. Schuchert and L. Pirrson. A Text-book of Geology, Vol. I.
P. Lake and R. H. Rastal. A Text-book of Geology.
Dana-ford. A Text-book of Mineralogy.
H. C. Dasgupta. Determinative Mineralogy.
Hatch and Well. Text-book of Petrology, Igneous Rocks.
Woods. Invertebrate Palaeontology.
Wadia. Geology of India.
Evans and Davies. Elementary Crystallography.
A. R. Dwerryhouse. Geological and Topographical Maps. Their Interpretation and Use.
Morley Davis. Introduction to Palaeontology.
Smith. Minerals and the Microscope.

Honours.

(In addition to the Pass Course.)

Sir A. Geikie. A Text-book of Geology, Vols. I and II.
Tyrrel. Principles of Petrology.
Harker. Natural History of Igneous Rocks.
Gregory. Elements of Economic Geology.

R. D. Oldham. Manual of Geology of India.
Seward. Plant Life Through the Ages.
Harker. Notes on Geological Maps.
Hatch and Rastal. Text-book of Petrology, Vol. II, Sedimentary Rocks.
Evans. Determination of Minerals under the Microscope.
Records and Memoirs of the Geological Survey of India.
Iddings. Rock Minerals.
Swinerton. Outline of Palaeontology.

N. B.—The books are recommended to give an idea of the standard that is expected of the students at the B. Sc. Examination. They are not to be considered as text-books. The subject is to be studied with the help of the syllabus prescribed in the Regulations for the B. Sc. Examination.

Zoology.

Books recommended to be used in studying the subject in accordance with the Syllabus:—

Pass Course.

Arthur Thompson. Outlines of Zoology.
Shipley and MacBride. Zoology.
Bourne. Comparative Anatomy of Animals.
Dendy. Outlines of Evolutionary Biology.
Doncaster. An Introduction to the Study of Cytology.
Kellicott. Outlines of Chordate Development.

Practical.

Marshall. The Frog.
Marshall and Hurst. Junior Course of Practical Zoology.

Honours Course.

(In addition to the books recommended for the Pass Course.)

Parker and Haswell. Text-book of Zoology.
Lull. Organic Evolution.
Walter. Genetics.

Practical.

(The same as for the Pass Course.)

The following books are recommended for reference:—

The Cambridge Natural History.
Ray Lankester—A Treatise on Zoology.
Sidgwick—Students' Text-book of Zoology.

Anthropology.

(To be notified later.)

J. CHAKRAVORTI, *Registrar.*

Orders by the Vice-Chancellor and Syndicate of the Calcutta University.

Senate House, the 4th February 1935.

NOTIFICATION No. T. 391.

L. T. EXAMINATION, 1937.

Books recommended—

1. The Principles of Education.

Betts. Mind and its Education.
James. Talks to teachers on Psychology and to Students on some of Life's Ideals.
Peter Sandiford. Educational Psychology—An Objective Study.

2. Methods of Teaching and School Administration.

J. Adams. The New Teaching.
Oxford University Press. Instruction in Indian Secondary Schools.
Thorndyke. Education.
H. Wyatt. The Teaching of English in India.
Raymont. The Principles of Education.
The suggestion for the consideration of teachers and others concerned in the work of Public Elementary Schools (Board of Education, London).

3. History of Education.

J. M. Sen. History of Elementary Education in India. (Book Co., Ltd.)
Birchenough. History of Elementary Education (Chapters II, III, IV, V, IX and X).
Wilson, J. D. The Schools of England (Sidgwick and Jackson, Ltd.)
J. M. Sen. Primary Education Acts, India—A Study. (Association Press.)

4. English Composition (including Translation, Essay-writing, etc.).

No special books are recommended. The Essay will carry 50 marks.

B. T. EXAMINATION, 1937.

Books recommended—

1. The Principles of Education.

Meredith. Bearings of Modern Psychology on Education Theory.
Nunn. Education, its Data and First Principles.
Betts. The Mind and its Education.
Sandiford. Educational Psychology—An Objective Study.
McDougall. Social Psychology.
Henderson. Principles of Education.
Terman. Measurement of Intelligence.
Pallard, P. B. Group Tests.
B. N. Jha. Modern Educational Psychology.

2. The Contents and Methods of teaching Selected subjects and School Management.

John Adams. The New Teaching.
John Adams. Modern Development in Education Practice.
John Adams. Exposition and Illustration in Teaching.
E. A. Macnee. Instruction in Indian Secondary Schools—Oxford University Press.
Thorndyke. Education.
West. Bilingualism in Education.
The suggestion for the consideration of teachers and others concerned in the work of Public Elementary Schools (Board of Education, London).

3. History of Education.

N. N. Law. Promotion of Learning in India by Muhammadans.
Keay, F. E. Ancient Indian Education.
Ameer Ali. Spirit of Islam, Chapter XVIII.
Munroe. A Brief Course of History of Education (Macmillan and Co.).
James, H. R. Education and Statesmanship in India.
Boyd. From Locke to Montessori.
Birchenough, C. History of Elementary Education (Chapters II, III, IV, V, IX and X).
J. M. Sen. History of Elementary Education in India.
N. N. Majumdar. History of Education in Ancient India.
Wilson, J. D. The Schools of England (Sidgwick and Jackson, Ltd.).
Peter Sandiford. Comparative Education (Chapters I and III).
Ziauddin. Systems of Education (Longmans).
Primary Education Acts in India since 1918 are to be studied.

4. English Composition including an Essay.

No special books are recommended. The essay will carry 50 marks.

J. CHAKRAVORTI, *Registrar.*

Approved by the Executive Council, dated the 2nd February 1935.]

University of Dacca.

Ramna, Dacca, the 2nd February 1935.

Time-table for the Preliminary M.A. Examination in Mathematics, the Preliminary M.Sc. Examinations and the Final M.A. and M.Sc. Examinations and the Supplementary Final M.A. Examination to be held in July 1935.

Preliminary M.A. and M.Sc. Examinations in Mathematics, 1935.

Time—11 a.m. to 3 p.m.

1935.			
Monday,	July 8	..	Paper I.
Tuesday	,, 9	..	Paper II.
Thursday	,, 11	..	Paper III.

Preliminary M.Sc. Examinations in Physics and Chemistry, 1935 (Theoretical Papers.)

Time—11 a.m. to 3 p.m.

1935.			
Monday,	July 8	..	Paper I.
Tuesday	,, 9	..	Paper II.

(1) Final M.A. Examination, Course A, 1935 (including Final M.Sc. Examination in Mathematics) and (2) Supplementary Final M.A. Examination, 1935.

Time—11 a.m. to 3 p.m.

1935.			
Saturday,	July 13	..	Paper I.
Monday	,, 15	..	Paper II.
Tuesday	,, 16	..	Paper III.
Wednesday	,, 17	..	Paper IV.
Thursday	,, 18	..	Paper V.
Saturday	,, 20	..	Paper VI.
Monday	,, 22	..	Paper VII.
Tuesday	,, 23	..	Paper VIII.
Wednesday	,, 24	..	Paper IX (Special Paper in Philosophy).

The specific date on which the examination of each Paper in each subject of the Supplementary Final M.A. Examination will be held, will be notified in the Detailed Time-table in due course.

Final M.Sc. Examination, 1935. (Theoretical Papers) (excluding Final M.Sc. Examination in Mathematics).

Time—11 a.m. to 3 p.m.

1935.			
Saturday,	July 13	..	Paper I.
Monday	,, 15	..	Paper II.
Tuesday	,, 16	..	Paper III also special Paper for candidates appearing with thesis.

Preliminary and Final M.Sc. Practical Examinations, 1935.

(*i*) The Practical Examinations in Physics and Chemistry will be held after the Theoretical Examinations in those subjects are over.

(*ii*) Candidates for the M.Sc. Practical Examinations must ascertain from the heads of the departments of Physics and Chemistry the exact dates, time and place of their Practical and Viva Voce Examinations.

Final M.A. Viva Voce Examinations, 1935.

Candidates for the Final M.A. Examinations including the Final M.Sc. Examination in Mathematics must ascertain from the heads of the departments concerned the exact dates, time and place of their Viva Voce Examinations.

N. AHMAD, *Registrar.*

[Approved by the Executive Council, dated the 2nd February 1935.]

University of Dacca.

Ramna, Dacca, the 2nd February 1935.

Time-table for the B.L. Examinations to be held in July 1935.

Preliminary and Final B.L. Examinations, July 1935.

Time—11 a.m. to 3 p.m.

1935.			
Thursday,	July 25	..	Muhammadan Law and Law of Persons.
Thursday	,, 25	..	Muhammadan Law.
Saturday	,, 27	..	Roman Law.
Monday	,, 29	..	Hindu Law.
Tuesday	,, 30	..	Jurisprudence.
Wednesday	,, 31	..	Constitutional Law and History of English Law.
Thursday,	August 1	..	Law of Transfer and Succession.
Thursday	,, 1	..	Law of Persons and Law of Testamentary and Intestate Succession.
Saturday	,, 3	..	Law of Real Property, Equity and Trusts.
Saturday	,, 3	..	Law of Real Property, Transfer and Trusts.
Monday	,, 5	..	Law of Contracts and Torts.
Tuesday	,, 6	..	Land Laws of Bengal.
Wednesday	,, 7	..	Law of Crimes.
Thursday	,, 8	..	Law of Evidence and Civil Procedure.

N. AHMAD, *Registrar.*

Orders by the Vice-Chancellor and Syndicate of the Calcutta University.

NOTICE.

Senate House, the 6th February 1935.

The examination of the following candidates are cancelled for using unfair means in the Examination Hall and they are debarred from appearing at the examination before July 1936:—

Preliminary Examination in Law, January 1935.

1. Prandhan Chattopadhyay (Regd. No. 5660 of 1927-28 Roll Cal. No. 15)—University Law College.
2. Rabindranath Ghosh (Regd. No. 755 of 1929-30 Roll Cal. No. 325)—Ripon Law College.

B. B. DUTT, *Controller (offg.).*

Orders by the Vice-Chancellor and Syndicate of the Calcutta University.

NOTICE.

Senate House, the 7th February 1935.

The undermentioned candidate is admitted to the Degree of Doctor of Science. The subject of his thesis submitted to and approved by the Board of Examiners is also stated below:—

Umaprasanna Basu.

Subject of thesis.

(*1*) Syntheses with Tautomeric Compounds of the Ketimine-Enamine Type.

(*2*) On Keto-Methylene Condensation, and some other papers.

B. B. DUTT,
Controller of Examinations (*offg.*).

Calcutta University.

NOTICES.

Senate House, the 7th February 1935.

The next M. B. Examinations will commence on Thursday, the 25th April 1935, and Wednesday, the 3rd April 1935, is the last date for submission of applications and fees for admission to the examinations.

The next M.A. and M.Sc. Examinations will commence on Tuesday, the 16th July 1935, and Wednesday, the 17th April 1935, is the last date for submission of applications and fees for admission to the examinations.

B. B. DUTT,
Controller of Examinations (*offg.*).

Education Department, Bengal.

NOTIFICATION.

Calcutta, the 11th February 1935.

In the list of successful students at the Junior Madrasah Examination held in October and November 1934, published under this office notification, dated the 29th December 1934, in Part IB of the *Calcutta Gazette* of the 17th January 1935:—

(1)

For

Baintola Junior Madrasah

110 Mullah Fazle Karim
111 Syed Hatem Ali

please *read*

Baintola Junior Madrasah.

110 Mullah Fazle Karim.

Baintola Kashipur Junior Madrasah.

111 Syed Hatem Ali.

(2)

For

Dharsa Junior Madrasah

20 Abdul Kader
21 Md. Nural Huda Mulla

please *read*

Dharsa Junior Madrasah.

20 Abdul Kader.

Kalachara Junior Madrasah.

21 Md. Nurul Huda Mulla.

(3)

For

Alampur Battala Junior Madrasah

279 Abdul Latif Khan
280 Md. Abdul Aziz

please *read*

Alampur Battala Junior Madrasah.

279 Abdul Latif Khan.

Husainpur Junior Madrasah.

280 Md. Abdul Aziz.

J. M. BOTTOMLEY,
Director of Public Instrn., Bengal.

Chittagong Division.

Chittagong, the 4th February 1935.

The following are awarded Primary (Maktab) Final Scholarships for the year 1934 on the results of the Primary (Maktab) Final Examination and Primary Final Scholarship Examination held in November 1934.

(Each scholarship is of the value of Rs. 3 per month tenable for two years with effect from the 1st January 1935.)

	Name of candidate.	School from which appeared.	School where the scholarship will be tenable.
	Tippera District.		
	Comilla subdivision—Open scholarships.		
1	Jnanendra Chandra Sarkar	Shahapur Board Primary School	Jaynagar M. E. School.
2	Muhammad Ala Baksh	Salukia Primary School	Barura M. E. School.
3	Lal Mohan Datta	Kharera Board Primary School	Comilla M. E. School.
	Brahmanbaria subdivision—Open scholarships.		
1	Zulfiquer Haidar	Paratali Boys' Maktab	Nabingar H. E. School.
2	Abdur Rashid	Narshinsar Maktab	Brahmanbaria M. E. School.
	Chandpur subdivision—Open scholarships.		
1	A. Y. M. Habibur Rahman	Aliganj Practising School	Hajiganj H. E. School.
2	Haripada De	Ditto	Chittagong Government M. E. School.
3	Jamila Khatoon	Monoharpur Maktab	Government Girls' School, Dacca.
	Reserved scholarships for Moslems in the Tippera district.		
1	Abdul Jalil	Aswinpur Maktab	Narayanpur M. E. School.
2	Md. Abdul Latif	Sahebganj Maktab	Kalirbazar Junior Madrasah.
	Noakhali District.		
	Sadar subdivision—Open scholarships.		
1	Ali Ahmad	Nalpur Board School	K. I. Ch. M. E. School, Noakhali.
2	Digendra Narayan Chakravarti	Sahapur Primary School	Muhammadpur H. E. School.
3	Abu Nasr Waheeduzzaman	Bamni Board Primary School	Rakhalia Junior Madrasah.
4	Mujibul Haq	Kalitara U. P. School	Noakhali K. I. Ch. M. E. School.
5	Suresh Chandra Chaudhury	Bamni Board Primary School	Dalalbazar H. E. School.
	Reserved scholarship for Moslems.		
1	Muhammadullah	Batagram Primary School	Chandraganj M. E. School.
	Feni subdivision—Open scholarships.		
1	Rajendralal Chakravarti	Charbadu Board Primary School	Hatiya H. E. School.
2	Md. Omar Miyan	Musapur Maktab I	Musapur M. E. School.
	Reserved scholarship for Moslems.		
1	Roshanara Begum	Govindapur U. P. School	Daganbhuiyan M. E. School.

	Name of candidate.	School from which appeared.	School where the scholarship will be tenable.
	Chittagong District.		
	Sadar subdivision—Open scholarships.		
1	Maqsud Ahmad	.. Abutorab Maktab	.. Mirsarai M. E. School.
2	Ahmadullah	.. Idgaon Primary School	.. Government Moslem H. E. School, Chittagong.
3	Md. Yaqubali	.. Abutorab Maktab	.. Mirsarai M. E. School.
4	Ahmad Safa	.. East Ziri Maktab	.. Kartala M. E. School.
5	Danu Miyan	.. W. Lolengara Maktab	.. Binajuri M. E. School.
6	Masudul Haq	.. Syedpur Primary School	.. Chittagong Collegiate School.
	Cox's Bazar subdivision—Open scholarship.		
1	Abdus Shukur	.. Lorarbag Maktab	.. Idgaon M. E. School.
	Reserved scholarships for Moslems in the Chittagong district.		
1	Nurul Alam	.. Fauzdarhat Maktab	.. Government Moslem H. E. School, Chittagong.
2	Jalal Ahmad	.. Idgaon Primary School	.. Ditto.
3	Kobbad Ahmad	.. Bamansundar Maktab	.. Mithanala M. E. School.
	Chittagong Hill Tracts.		
	Open scholarships.		
1	Suresh Chandra De	.. Maischari U. P. School	.. Mohara H. E. School.
2	Jamadanda Khisa	.. Barakalok U. P. School	.. Rangamati Government H. E. School.
	Reserved scholarships for backward classes in the Division.		
1	Jajneswar Kapali	.. Chandpur Brajanath Pathsala	.. Chandpur Ghani H. E. School.
2	Manindra Chandra Das	.. Nayergaon Primary School	.. Narayanpur M. E. School.

Special Primary Final Scholarships reserved for depressed and backward classes in the Division (sanctioned under the Director of Public Instruction, Bengal's letter No. 1058P., dated the 23rd February 1923).

	Tippera District.		
1	Manindra Kumar Das	.. Chandpur Brajanath Pathsala	.. Chandpur Ghani H. E. School.
2	Satish Chandra Sutradhar	.. Jatrapur Board Primary School	Brahmanbaria George H. E. School.
3	Kamini Kumar Nath	.. Kharera Board Primary School	.. Comilla M. E. School.
4	Jatindra Mohan Sarkar	.. Dowty School	.. Narayanpur M. E. School.
5	Birendra Kishore Das	.. Ghoshnagar Free Primary School	Syedpur M. E. School.
	Noakhali District.		
1	Brajakishore Nath Adhikari	.. Manipur U. P. School	.. Ghatla M. E. School.
2	Haripada Nath	.. Karamullapur U. P. School	.. Daganbhuiyan M. E. School.
3	Govinda Gopal Nath	.. Narattampur U. P. School	.. Chaumuhani M. E. School.
4	Birendra Kumar Pal	.. Masimpur Primary School	.. Panpara M. E. School.
	Chittagong District.		
1	Nagendra Kumar Nath	.. Maghadia Board Primary School	Abutorab H. E. School.
	Chittagong Hill Tracts.		
1	Jitashwa Dewan	.. Barakalok U. P. School	.. Rangamati Government H. E. School.

M. A. JAAFAR,

Inspector of Schools, Chittagong Division.

Rajshahi Division.

Jalpaiguri, the 1st February 1935.

The following candidate has been awarded a Lower Primary Scholarship reserved for backward classes, on the results of the Primary Preliminary Scholarship Examination of 1934, Rajshahi Division, in addition to the nine scholarships published in *Calcutta Gazette*, dated Thursday, the 31st January 1935.

(The scholarship is of the value of Rs. 2 a month and is tenable for two years with effect from the 1st January 1935.)

Ten Government Lower Primary Scholarships reserved for backward classes.

	Name of scholar.	Name of school from which the scholar appeared.	Name of school where the scholarship is tenable.
	(1 to 9 published in the *Calcutta Gazette*, dated the 31st January 1935.)		
10	Guman Singh Kami	.. Chaturbuddhi L. P. School (Darjeeling)	Pedong M. E. School (Darjeeling).

K. AHMED, *Inspector of Schools, Rajshahi Division.*

Registered No. C207

The Calcutta Gazette

THURSDAY, FEBRUARY 14, 1935.

PART II

Advertisements.

Notices.

Advertisements, Notices, etc., intended for insertion in this part of the Gazette cannot be received after noon on Saturday. All manuscripts and postal remittances must be addressed to Superintendent, Government Printing, Bengal Government Press, Alipore. For the convenience, however, of parties or firms located in Calcutta cash payments of Advertisement charges may be made at Publication Sales Office, Room No. 2, Ground Floor, Writers' Buildings, Calcutta.

In the Court of the Fourth Officer, Deoghar, Sonthal Parganas.

RENT SUIT No. 1029 OF 1934.

To Babu Jadunath Rai.

WHEREAS the Receiver, Rohini Estate, has instituted a rent suit against you for your holding in mauza Carstairs, town Deoghar, amounting to Rs. 32-13 and costs Rs. 10-1-6, you are hereby directed to appear before this Court personally or through an authorised agent to answer the claim or the case will be decided *ex-parte* on 27th February 1935.

S. N. HUSSAIN, Sub-Deputy Collector.

Deoghar, the 17th January 1935. (214—2)

In the Court of the Fourth Officer, Deoghar, Sonthal Parganas.

RENT SUIT No. 1037 OF 1934.

To Babu Shama Charan Dutta.

WHEREAS the Receiver, Rohini Estate, has instituted a rent suit against you for your holding in mauza Carstairs, town Deoghar, amounting to Rs. 21-4-3 and costs Rs. 9-5-6, you are hereby directed to appear before this Court personally or through an authorised agent to answer the claim on the 26th February 1935 or the case will be decided *ex-parte*.

S. N. HUSSAIN, Sub-Deputy Collector.

Deoghar, the 17th January 1935. (215—2)

In the Court of the Fourth Officer, Deoghar, Sonthal Parganas.

RENT SUIT No. 1051 OF 1934.

To Indumati Dasi.

WHEREAS the Receiver, Rohini Estate, has instituted a rent suit against you for your holding in Deoghar Williams town amounting to Rs. 7-8 and costs Rs. 6-3-3, you are hereby directed to appear before this Court personally or through an authorised agent to answer the claim or the case will be decided *ex-parte* on 26th February 1935.

S. N. HUSSAIN, Sub-Deputy Collector.

Deoghar, the 17th January 1935. (216—2)

In the High Court of Judicature at Fort William in Bengal, in insolvency.

NOTICE OF ADJUDICATION ORDER.

No. 7 of 1935.

Re Abdus Salam, lately residing at Phatak Habash Khan Katra Ataur Rahman, in the town of Delhi, at present residing at 11, Colootolla Street, in the town of Calcutta, formerly a service-holder and at present of no occupation and a prisoner in the civil side of the Presidency Jail, *ex parte* the debtor.

P. N. Mitter, debtor's solicitor.

ON the 31st day of January 1935 an order was made by the High Court of Judicature at Fort William in Bengal in its insolvency jurisdiction adjudging the abovenamed as an insolvent.

Note.—All debts due to the estate should be paid to me.

Dated this 4th day of February 1935.

G. M. FALKNER, Official Assignee.

In the High Court of Judicature at Fort William in Bengal, in insolvency.

NOTICE OF ADJUDICATION ORDER.

No. 8 of 1935.

Re Harold Eugene Blake of No. 36, Sarat Ghosh Street, Entally, employed as an Assistant to L. W. Leicester, Esquire, Bookmaker, 9, Dalhousie Square, in the town of Calcutta, *ex parte* the debtor in person.

ON the 1st day of February 1935, an order was made by the High Court of Judicature at Fort William in Bengal in its insolvency jurisdiction adjudging the abovenamed as an insolvent.

Note.—All debts due to the estate should be paid to me.

Dated this 6th day of February 1935.

G. M. FALKNER, Official Assignee.

In the High Court of Judicature at Fort William in Bengal, in insolvency.

NOTICE OF ADJUDICATION ORDER.

No. 9 of 1935.

Re Terence Wegwermer, lately residing at No. 77-4, Dhurrumtolla Street, but at present residing at No. 30, Creek Lane, in the town of Calcutta, an employee in the Bengal Government Press, Alipore, *ex parte* the debtor in person.

ON the 1st day of February 1935, an order was made by the High Court of Judicature at Fort William in Bengal in its insolvency jurisdiction adjudging the abovenamed as an insolvent.

Note.—All debts due to the estate should be paid to me.

Dated this 6th day of February 1935.

G. M. FALKNER, Official Assignee.

In the High Court of Judicature at Fort William in Bengal, in insolvency.

No. 6 of 1931.

Re Mohamed Faruq. (Firm Mohomed Faruq Mohamed Naqin.)

No. 131 of 1932.

Re Upendra Nath Sen.

NOTICE is hereby given that a dividend is intended to be declared in the above estates.

Persons claiming to be creditors of the above estates are required to lodge their claims in this office by an affidavit, supported by necessary vouchers, by the 18th February next, after which no claims received by this office will be considered.

Persons who have already lodged their claims need not file any fresh claim.

A form of proof of debt may be had on application.

G. M. FALKNER, Official Assignee,
10, Old Post Office Street, Calcutta, the 4th February 1935.

(401—1)

In the High Court of Judicature at Fort William in Bengal, in insolvency.

Estate Tellore Raghaba Kachapeswar Aiyar.

No. 41 of 1931.

Estate Charles Edward Audsley.

No. 178 of 1931.

NOTICE is hereby given that a second dividend is intended to be declared in the above estates. Persons claiming to be creditors of the above estates are hereby required to file their claims in this office by an affidavit supported by vouchers on or before the 28th instant, after which date claims received in this office will not be considered. Creditors who have already filed their claims need not file fresh claims.

G. M. FALKNER, Official Assignee.

Calcutta, the 6th February 1935. (424—1)

In the High Court of Judicature at Fort William in Bengal, in insolvency.

No. 114 of 1933.

Re Estate Shaik Nowaz Warisally.

NOTICE is hereby given that a dividend is intended to be declared in the above estate. Persons claiming to be creditors of the above estate are hereby required to file their claims by an affidavit supported by vouchers on or before the 28th instant, after which date claims received in this office will not be considered.

Creditors who have already filed their claims need not file fresh claims.

G. M. FALKNER, Official Assignee.

Calcutta, the 6th February 1935. (425—1)

In the High Court of Judicature at Fort William in Bengal, in insolvency.

NOTICE is hereby given to the undermentioned insolvents that owing to their not having applied for their discharge within eighteen months of the Order of Adjudication made against them, the Registrar-in-Insolvency, High Court, Calcutta, has fixed Monday, the 18th March 1935, at eleven o'clock in the forenoon for the hearing by him of the Official Assignee's application under section 41 of the Presidency Towns Insolvency Act III of 1909 and Rule 142A made thereunder for Orders of Annulment of the respective Adjudication Orders. Insolvents desirous of having the hearing postponed must apply to the Registrar-in-Insolvency and not to the undersigned—

Adjudication Order.		Insolvents.
Nos.	Dates.	
14	25-1-1933	Reginald Young.
19	7-2-1933	Stewart Edmundstone Pugh.
25	10-2-1933	Ram Chorita Singh.
28	16-2-1933	Shamdas.
36	27-2-1933	Bholanath Mukherjee.
40	7-3-1933	Jotindra Mohon Bhattacharjee.
41	14-3-1933	Firm of Balchand Chhagan Lal.
45	10-3-1933	Charles Joseph Armes.
50	18-3-1933	Golam Sadak and Abdul Rashid.
59	29-3-1933	Sugan Chand Mull.
63	5-4-1933	Gour Mohan Singha.
65	24-4-1933	Firm of Lakhmi Chand Chhogmull.
69	26-4-1933	Soshi Bhusan Sarkar.
71	27-4-1933	Baidya Nath Pal.
73	1-5-1933	John Henry Austin Lewis Drew.
76	3-5-1933	Charles Atherton Hill and Eileen Vera Hill.

G. M. FALKNER, Official Assignee.

Calcutta, the 6th February 1935. (429—1)

In the Court of the Sub-Judge of Asansol.

Section 19 (*2*) of the Provincial Insolvency Act.

INSOLVENCY CASE No. 47 OF 1934.

NOTICE is hereby given to his creditors that the insolvency petition filed by Bansidhar Jalan has been admitted and the 22nd February 1935 has been fixed for hearing thereof.

K. BANERJI, Sub-Judge.

Asansol, the 12th January 1935. (166—1)

NOTICE TO CREDITORS OF APPLICATION FOR DISCHARGE.

Section 41 (*1*) of the Provincial Insolvency Act.

In the Court of the Sub-Judge of Asansol.

INSOLVENCY CASE No. 40 OF 1933.

Rajendra Chandra Banerjee, insolvent.

TAKE notice that the above-named insolvent has applied for his discharge and that the Court has fixed the 15th February 1935 for hearing of the said application

K. BANERJI, Sub-Judge.

Asansol, the 5th January 1935. (167—1)

In the Court of the Sub-Judge at Asansol.

Section 19 of the Provincial Insolvency Act.

INSOLVENCY CASE No 45 OF 1934.

Sasipada Chatterjee, petitioner.

TAKE notice that the petition for insolvency filed by the aforesaid petitioner has been admitted and that the Court has fixed 22nd February 1935 as the date for the hearing thereof.

K. BANERJI, Sub-Judge.

Asansol, the 22nd January 1935. (284—1)

In the Court of the Sub-Judge at Asansol.

Section 19 of the Provincial Insolvency Act.

INSOLVENCY CASE No. 48 OF 1934.

Shaikh Khoda Bux, petitioner.

TAKE notice that the petition for insolvency filed by the aforesaid petitioner has been admitted and that the Court has fixed 22nd February 1935 as the date for the hearing thereof.

K. BANERJI, Sub-Judge.

Asansol, the 22nd January 1935. (285—1)

NOTICE TO CREDITORS OF APPLICATION FOR DISCHARGE.

Section 41 (*1*) of the Provincial Insolvency Act, V of 1920.

In the Court of the District Judge at Dacca.

INSOLVENCY CASE No. 33 OF 1933.

Ram Chandra Saha, son of late Ram Kumar Saha, resident of Panagram, police-station Nawabganj, district Dacca, insolvent.

TAKE notice that the abovenamed insolvent has applied at the Court for his discharge, and that the Court has fixed the 18th day of February 1935 at 10 o'clock for hearing the application.

Dated this 23rd day of January 1935.

E. B. H. BAKER, District Judge.

(286—1)

NOTICE TO CREDITORS OF APPLICATION FOR DISCHARGE.

Section 41 (*1*) of the Provincial Insolvency Act, V of 1920.

In the Court of the District Judge at Dacca.

INSOLVENCY CASE No. 34 OF 1933.

Upendra Chandra Ghosh, son of late Ishan Chandra Ghosh, resident of Malitola, police-station Kotwali, district Dacca, insolvent.

TAKE notice that the abovenamed insolvent has applied at the Court for his discharge, and that the Court has fixed the 19th day of February 1935 at 10 o'clock for hearing the application.

Dated this 23rd day of January 1935.

E. B. H. BAKER, District Judge.

(287—1)

In the Court of the District Judge of Faridpur.

INSOLVENCY CASE No. 175 OF 1934.

Saharulla Fakir, son of late Asimaddi Fakir, of Char Bamandi, police-station Baliakandi, district Faridpur, debtor, petitioner.

NOTICE is hereby given that the abovenamed debtor, petitioner, has applied to this Court for being adjudged insolvent and the 16th February 1935 has been fixed for the hearing of the application.

K. C. BASAK, District Judge.

Faridpur, the 29th January 1935.

(325—1)

In the Court of the District Judge of Faridpur.

INSOLVENCY CASE No. 165 OF 1934.

Abbas Molla, son of late Alimaddin Molla, of Char Gnadaha, police-station Baliakandi, district Faridpur, debtor, petitioner.

NOTICE is hereby given that the abovenamed debtor has applied to this Court for being declared insolvent and the 16th February 1935 has been fixed for the hearing of the application.

K. C. BASAK, District Judge.

Faridpur, the 29th January 1935. (326—1)

In the Court of the District Judge of Faridpur.

INSOLVENCY CASE No. 78 OF 1934.

Abinash Chandra Saha, son of late Nanda Kumar Saha, of Tepakhola, police-station Kotwali, district Faridpur, creditor, petitioner,

versus

Hari Narayan Saha, son of late Indra Bhusan Saha, of Rajbari, police-station Goalundo, district Faridpur, debtor, opposite party.

NOTICE is hereby given that the abovenamed creditor, petitioner, has applied to this Court for having the debtor, opposite party, adjudged insolvent, and the 16th February 1935 has been fixed for the hearing of the application.

K. C. BASAK, District Judge.

Faridpur, the 29th January 1935. (327—1)

In the Court of the District Judge of Hooghly.

NOTICE is hereby given, under clause (*2*) of section 12 of the Provincial Insolvency Act, V of 1920, to his creditors that the insolvency petition of Girish Chandra Koley, son of late Gosain Chandra Koley, of Birati, thana Arambagh, district Hooghly, has been admitted by this Court as No. 3 of 1935 and that the 19th February 1935 has been fixed for the hearing thereof.

S. SEN, District Judge.

Chinsura, the 25th January 1935. (311—1)

In the Court of the District Judge of Hooghly.

NOTICE is hereby given under clause (*2*) of section 12 of the Provincial Insolvency Act, V of 1920, to his creditors that the insolvency petition of Shew Das Tatwa, son of late Har Dayal Das Tatwa, of Champdani, thana Bhadreswar, district Hooghly, has been admitted by this Court as No. 107 of 1934 and that the 21st February 1935 has been fixed for the hearing thereof.

S. SEN, District Judge.

Chinsura, the 2nd February 1935. (409—1)

In the Court of the Addl. District Judge of Hooghly at Howrah.

INSOLVENCY PETITION No. 155 OF 1932.

NOTICE is hereby given that Bhuth Nath Bose, son of late Tara Chand Bose, of 12, Rajballav Saha 1st Bye-lane, thana Shibpur, district Hooghly, was on the 24th October 1933 adjudged an insolvent. The 18th February 1935 has been fixed for framing a schedule and creditors are required to prove their claim on that day.

S. N. MODAK, Addl. District Judge.

Howrah, the 31st January 1935. (416—1)

MR. SAILENDRA NATH MITRA intends to be enrolled as an Advocate of the High Court, Calcutta.

(319—4)

MR. JALADHI NATH SADHU, B.L., intends to enrol as an Advocate of the Calcutta High Court.

(331—4)

MR. NIRANJAN SARKAR, M.A., B.L., intends to be enrolled as an Advocate of the Calcutta High Court.

(335—4)

MR. ABANI KANTA ROY, M.A., B.L., intends to be enrolled as an Advocate of the Calcutta High Court.

(336—4)

MR. SURJYA NARAYAN CHATTERJI, M.A., B.L., desires to be enrolled as an Advocate, Calcutta High Court.

(342—4)

MR. ATMARAM KHEMKA, M.A., B.L., desires to be enrolled as an Advocate of the Calcutta High Court.

(343—4)

MR. ANIL KUMAR MITTER, B.Sc., B.L., desires to be enrolled as an Advocate, Calcutta High Court.

(349—4)

MR. SAROJENDRA MOHAN ROY CHOWDHURY, M.A., B.L., desires to be enrolled as an Advocate of the Calcutta High Court.

(366—4)

MR. SHAIKH NABI BUKHSH, B.A., B.L., intends to practise as an Advocate, High Court, Calcutta.

(387—4)

MR. GURUPRASAD GHOSH intends to be enrolled as an Advocate of the High Court, Calcutta.

(388—4)

MR. BIBHOR KUMAR LAHIRI, B.L., intends to practise as an Advocate, High Court.

(389—4)

MR. KAMAKHYA DAS BANDYOPADHYAY, B. Sc., B.L., intends to be enrolled as an Advocate, High Court.

(390—4)

JNANENDRA NATH BAKSI, M.A., B.L., desires to be enrolled as an advocate of the High Court.

(391—4)

KAMAKHYAPADA CHAKRABORTY, M.A., B.L., desires to be enrolled as an Advocate of the High Court.

(392 4)

MR. JOTINDRA MOHON PAUL intends to practise as an Advocate, High Court, Calcutta.

(393—4)

MONOHAR CHATTERJEE intends to be enrolled as an Advocate of the Calcutta High Court.

(394—4)

MR. BINODEBIHARI HALDER, M.A., B.L., intends to be enrolled as an Advocate, Calcutta High Court.

(395—4)

DHIRENDRANATH MUKHOPADHYAY, B.L., intends to be enrolled as an Advocate.

(396—4)

JITENDRA KUMAR MITRA, M.A., B.L., wishes to be enrolled as an Advocate of the Calcutta High Court.

(398—4)

MR. ACHYUTACHARAN CHATTOPADHYAY, B.L., desires to be enrolled as an Advocate of the High Court, Calcutta. (402—4)

MR. NIKHIL CHANDRA GANGOPADHYAY, B.L., desires to be enrolled as an Advocate of the High Court, Calcutta. (403—4)

MR. SATYA BHUSAN DE, B.L., intends to practise as an Advocate, High Court. (404—4)

MR. KIRAN CHANDRA BOSE, B.L., intends to be enrolled as an Advocate of the High Court, Calcutta.

(413—4)

MR. JAGAT CHANDRA SARKAR, M.A., B.L., intends to be enrolled as an Advocate of the High Court, Calcutta.

(414—4)

AMIYA NATH DEY, B.L., intends to be admitted as an Advocate of the High Court, Calcutta. (418—4)

MR. PANKOJ NATH MUKHERJI, B.L., desires to be enrolled as an Advocate of the Calcutta High Court.

(432—4)

WANTED a Muhammadan teacher for the Karaya Moslem Boys' Middle English School, Calcutta, on a monthly salary of Rs. 50 *less* 5 per cent. emergency cut in the scale of Rs. 50—4/2—90—5/2—100. Preference will be given to a B.Sc., with experience in teaching and competent to teach Geography and Science in Classes V and VI.

The application containing the following information should be submitted to this office on or before the 15th February 1935:—

(1) Name of father.
(2) Native place—
  (*a*) Village.
  (*b*) Post Office.
  (*c*) Thana.
  (*d*) District.

(3) Age on 1st March 1935 (calculated according to the Matriculation Certificate).
(4) Whether competent to impart instruction through the medium of Urdu.
(5) Athletic qualification.
(6) Teaching experiences.

J. M. SEN,
Inspector of Schools, Presidency Division.

40/1A, Free School Street, Calcutta, the 24th January 1935.

WANTED a District Engineer for the District Board of Pabna on a graded pay of Rs. 250 - 10 —300—20—400 (efficiency bar) 400—20—500. Candidates must be qualified under the rules for the appointment of District Engineers as per Bengal Government notifications No. 1781-L. S.-G., dated the 12th December 1912, and No. 809, dated the 18th February 1922, according to which in addition to being a qualified Engineer of either an Indian or British University the candidate must have held charge of important works for not less than five years.

Candidates should apply in sealed and registered covers addressed to the Chairman, District Board, Pabna, and superscribed "Application for appointment of District Engineer" accompanied by all the original certificates and testimonials of conduct and work from his immediate superiors under whom he served, required by the rules, together with a suitable envelope addressed and sufficiently stamped for registration for returning the original certificates in the event of the application being unsuccessful. Applicants must state their ages, experience of professional works and places of residences.

Applications will be received by the undersigned up to the 5th March 1935. Selected candidate will not be allowed any joining travelling allowance. Canvassing in any form will disqualify a candidate.

ABDUR RASCHID MAHMOOD,
Chairman, District Board.

Pabna, the 4th February 1935. (423—3)

Road Cess Notification.

THE District Board of Chittagong has fixed the rate of road cess for the year 1935-36 at 6 pies in a rupee as in the year 1934-35 as per resolution No.1, dated 11th January 1935.

M. A. AZIM, Chairman.

Chittagong, the 23rd January 1935. (294—3)

Road Cess Notification.

IT is hereby notified for information of the public that under section 46 of the Bengal Local Self-Government Act, Act III (B. C.) of 1885, the district board of Burdwan resolved, at their special meeting held on the 19th January 1935, that the road cess be levied in the Burdwan district at the maximum rate of six pies in the rupee on the annual value of lands, etc., as heretofore, during the financial year 1935-36.

MANILOLL SINGH ROY, Raja Bahadur, C.I.E., of Chakdighi, Chairman, District Board.

Burdwan, the 4th February 1935. (417—1)

Public Service Commission (India).

APPLICATIONS are invited for the posts of (*a*) Plant Physiologist, (*b*) Soil Physicist for dry farming research in the Punjab. 2. Candidates must possess a degree in Science of an Indian or European University, not lower than the M.Sc., or equivalent qualifications, embracing Botany and Plant Physiology for Plant Physiologist's post and embracing Physics or Chemistry for Soil Physicist's post, should have a sound knowledge of agricultural conditions having a bearing on the problem of dry farming, and should have done research work at least for three years on similar or allied problems in an Agricultural Institute. Published work, if any, will be considered as an additional qualification. In addition, candidates for the post of Plant Physiologist should have experience of research in Crop Physiology and those for the post of Soil Physicist in the designing and conduct of field experiments. 3. Pay Rs. 200—200—250—25—550/25—750, subject to 15 per cent. cut and also to temporary cut as long as it lasts. Scale of pay subject to revision. 4. Posts temporary for a period of five years. Probation one year. 5. The appointing authority intends to appoint persons belonging to the Punjab if they are on the list of "candidates most suitable for appointment" submitted by the Public Service Commission. 6. Government servants eligible if permitted to apply by their departments. 7. Last date for receipt of applications 2nd March 1935. Prescribed application forms and further particulars may be obtained from the Secretary, Public Service Commission, Delhi. Applicants for forms must mention the name of the post.

Delhi, the 30th January 1935. (434—1)

Public Service Commission (India).

APPLICATIONS are invited for a permanent post of Assistant Superintendent for Hindu Epigraphy and for two officiating vacancies of Assistant Superintendents for general work in the Archaeological Department. 2. Pay Rs. 300—325, on confirmation Rs. 350—25—600—40—680. 3. Age not exceeding 40 years. 4. Qualifications—(*a*) *Assistant Superintendent for Hindu Epigraphy*—M.A., well versed in Sanskrit and Prakrit languages and strong in North Indian Epigraphy and Indian History. Candidates who have collected and published inscriptions in Kharoshthi and different types of Brahmi and possess working knowledge of one of the Dravidian languages will be regarded as having additional qualifications. (*b*) *First post of Assistant Superintendent for general work*—Degree of a recognised University. A thorough knowledge of Sanskrit, Ancient Indian History, Epigraphy and Iconography. Original research work, knowledge of one European language besides English and experience of Archaeological excavation and conservation will be regarded as an additional qualification. (*c*) *Second post of Assistant Superintendent for general work*—Degree of a recognised University and qualification in architecture. Preference will be given to those who have passed the "Royal Institution of British Architects" Examination and have received practical training or have assisted for some time in the office of an Architect of good standing. 5. Government servants eligible, if permitted to apply by their departments. 6. Last date for receipt of applications 11th March 1935. Prescribed application forms and further particulars can be obtained from the Secretary, Public Service Commission, Delhi. Applicants for forms must mention the name of the post.

Delhi, the 6th February 1935. (435—1)

Public Service Commission (India).

APPLICATIONS are invited for the post of Superintending Engineer, Health Services, Delhi. 2. A candidate must have either passed parts A and B of the Associate Membership Examination of the Institution of Engineers (India); or have passed any examination which exempts him from passing the Associate Membership Examination; or have obtained such other Diploma o distinction in Engineering as the Governor-General in Council on the advice of the Public Service Commission may decide to accept, and should have had extensive experience in the designs and execution of large water-supply and drainage schemes. 3. Government servants eligible, if permitted to apply by their departments. 4. Pay Rs. 1,750—100—2,150, Overseas pay £13-6-8 (only in the case of a Government official, if he is already in receipt of it), and motor car allowance Rs. 120 per mensem, all subject to such percentage cuts, if any, as may for the time being be in force. 5. The post is temporary for a period of about three years, but may be extended at the discretion of Government. 6. Last date for receipt of applications 11th March 1935. Application forms and further particulars can be obtained from the Secretary, Public Service Commission, Delhi. Applicants for forms must state the name of the post for which they wish to apply.

Delhi, the 6th February 1935. (436—1)

THE Bengal and Madras Service Family Pension Fund which is provisionally managed and assisted by Government has for its object the provision of monthly pensions for the maintenance of the widows and children of subscribers and is open, with certain exceptions, to all active and pensioned members of the Uncovenanted service of Government (except those serving under the Government of Bombay), and to Local Fund servants earning pensions from Government. Some of the special features of the fund are (1) that widowed daughters incapable of re-marriage or children labouring under such mental or bodily infirmities as incapacitate them from earning their livelihood or preclude the possibility of marriage (in case of a daughter) are admitted to its benefits; and (2) that subscribers to the Widows and Daughters' branches are entitled to a refund of 30 per cent. of the premia paid, should the nominee predecease them after five years of admission. The second quinquennial valuation of the Fund has been completed by the Actuary to the Government of India, and his report discloses very favourable results. For forms of application and rules of the Fund apply to the Accountant-General, Bengal, Imperial Secretariat Buildings, Calcutta.

NOTICE is hereby given that all exhibits filed in cases disposed of in this Court during the year 1932 will be destroyed if not taken back before 31st March 1935 by the parties who filed them.

N. N. GUPTA, Municipal Magistrate, Calcutta.

Town Hall, Calcutta, the 9th January 1935.

NOTICE is hereby given that all exhibits filed in cases disposed of in this Court during the year 1932 will be destroyed if not taken back before 31st March 1935 by the parties who filed them.

A. MAJID, Municipal Magistrate, Calcutta.

Town Hall, Calcutta, the 9th January 1935.

Custom House Notice.

NOTICE is hereby given that whereas Messrs. J. F. Madan, have failed to meet the demand made for duty on three packages of Indian Films marked Calcutta India 21/23 *ex* ss. "Goldenfels" and bonded at 5, Dhurumtolla Street under warehousing bill of entry No. 78 of 8th January 1932 the said goods will be sold by auction on the 21st February 1935 at noon, at Messrs. Mackenzie Lyall & Co.'s Sale Room under the provisions of section 119 of the Sea Customs Act.

W. J. WARD, Collector of Customs.

Calcutta Custom House, the 30th January 1935.

(338—2)

Estate William George Barney, deceased.

PURSUANT to section 360 of Act XXXIX of 1925 and section 42 of Act XXVIII of 1866, the creditors and all persons interested in the Estate of William George Barney, late of "Mildura", 202, Seafield Road, West Southbourne, County Borough of Bournemouth, England, and late an Assistant to Messrs. Brooke Bond (India), Limited, Calcutta, who died at Calcutta on the 15th day of September 1934, and Letters of Administration to whose Estate were granted by the High Court, Calcutta, on the 14th day of January 1935, are hereby required to submit particulars of their claims to the undersigned on or before the 11th day of March 1935, after which date the Administrator will distribute the assets, having regard only to the claims of which notice shall then have been received.

ORR, DIGNAM & CO.,
Solicitors to the Administrator.

32, Dalhousie Square, South, Calcutta, 5th February 1935.

(408—1)

Lost.

THE Government Promissory Note No. 099539 of the 3 per cent. loan of 1896-97 for Rs. 500 originally standing in the name of Nuffar Chandra Ghoshal, the proprietor, by whom it was never endorsed to any other person, having been lost, notice is hereby given that payment of the above note and the interest thereupon have been stopped at the Public Debt Office, Imperial Bank of India, Calcutta, and that application is about to be made for the issue of duplicate in favour of the proprietor. The public are cautioned against purchasing or otherwise dealing with the above-mentioned security.

Signature of the advertiser—Nuffar Chandra Ghoshal.

Residence—Village Joynagar, post office Gangadharpur, district Howrah.

(312—3)

Lost.

A RECEIPT numbered 22250, dated 27th June 1934, and granted by the Public Debt Office, Imperial Bank of India, on submission of the undermentioned Government Promissory Note. Notice of loss has been given to the Public Debt Office, Imperial Bank of India, and the undersigned is about to apply for surrender of the security—

G. P. Note No.	Loan.	Amount.	Holder's name.
		Rs.	
359821	3½ per cent.. 1900-01.	5,000	Gopee Ballabh Sen.

Name of the proprietor—Gopee Ballabh Sen.

Residence—66, Lansdowne Road, Calcutta.

(437—1)

In the matter of the Indian Companies Act, 1913, and in the matter of the Chandpur Bank, Ltd. (in liquidation).

Notice to the shareholders of the Chandpur Bank, Ltd. (in liquidation), and to all whom it may concern under section 217 of the Indian Companies Act for final meeting and dissolution.

NOTICE is hereby given that a general meeting of the Chandpur Bank, Ltd. (in liquidation), will be held at the Comilla Office of the Comilla Union Bank, Ltd., at Comilla, in the district of Tippera, on Sunday, the 17th March 1935, at 3 p.m. (pursuant to section 217 of the Indian Companies Act, 1913), for the purpose of explaining and laying before it the account of the Company in liquidation and how the winding up has been conducted and the property of the Company disposed of by the liquidator.

For and on behalf of the Chandpur Bank, Ltd.
(in liquidation),

ASWINI KUMAR BRAHMOCHARY, Liquidator.

Chandpur, the 1st February 1935. (415—1)

In the matter of the Indian Companies Act, VII of 1913,

and

In the matter of Mackintosh Burn, Limited.

NOTICE is hereby given that the order of the High Court of Judicature at Fort William in Bengal, dated the 17th day of December 1934 confirming the reduction of the capital of the abovenamed Company by cancelling capital which has been lost or is unrepresented by available assets to the extent of Rs. 1,500 per share upon each of the Ordinary Shares which have been issued and are now outstanding and by reducing the nominal amount of all the Ordinary and Preference Shares in the Company's capital from Rs. 5,000 to Rs. 3,500 per share respectively and the Minute (approved by the Court) showing with respect to the capital of the Company as altered the several particulars required by the above statute were registered by the Registrar of Joint Stock Companies on the 18th day of January 1935.

AND further take notice that the said Minute is in the words and figures following ;—

"The capital of the Company is Rs. 16,45,000 divided into 461 Ordinary Shares of Rs. 3,500 each and 9 Preference Shares of Rs. 3,500 each and such Preference Shares shall confer the right to a fixed cumulative preferential dividend at the rate of 6 per cent. per annum on the capital for the time being paid up thereon and in a winding up shall have priority to the Ordinary Shares as to the payment off of arrears of dividend whether declared or not up to the commencement of the winding up and as regards return of capital shall rank *pari passu* with the Ordinary Shares but shall not confer any further right to participate in profits or assets. On any increase of capital new shares may be issued with any preferential deferred qualified or special rights privileges or conditions. Provided always that the rights attached to the said Preference Shares or to any shares having preferential deferred qualified or special rights privileges or conditions attached thereto may be altered or dealt with in accordance with Article 59 of the Articles of Association of the Company but not otherwise."

Dated this 30th day of January 1935.

SANDERSONS & MORGANS,

Solicitors for the Company, 26, Dalhousie Square, Calcutta.

(324—1)

In the matter of the Indian Companies Act, VII of 1913,

and

In the matter of the Kamalasagar Insurance (in liquidation).

NOTICE is hereby given that in an extraordinary general meeting of the members of the abovenamed Society, held on the 19th January 1935, it has been resolved that it has been proved to the entire satisfaction of the meeting that the Society cannot, by reason of its liabilities, continue its business and that it is advisable to wind up, and the Society be and is hereby wound up voluntarily and that Mr. Ambika Charan Roy of 9, Sovaram Bysack Street, Calcutta, be and is hereby appointed liquidator for the purpose of such winding up.

JNANENDRA MOHAN ROY, Chairman.

Kamalasagar, Tippera, the 25th January 1935.

(290—1)

In the matter of the Indian Companies Act, 1913, and

In the matter of the Steinthal Tea Company, Limited (in voluntary liquidation).

NOTICE is hereby given under section 206(*1*) of the Indian Companies Act, 1913, that at the ordinary general meeting of the abovenamed Company held on 31st January 1935, it has been resolved by an extraordinary resolution duly passed at the said meeting that the affairs of the Company be wound up voluntarily and that Babu Charu Chandra Son of Jalpaiguri be appointed liquidator for the aforesaid purpose.

ABINAS CHANDRA ROY, Chairman.

Jalpaiguri, the 1st February 1935. (397—1)

In the matter of the Indian Companies Act, 1913, and

In the matter of Steinthal Tea Company, Limited (in voluntary liquidation).

NOTICE is hereby given under section 209 (*1*) of the Indian Companies Act, 1913, that a meeting of the creditors of the abovenamed Company will be held on Wednesday, the 27th February 1935, at 8-30 a.m., at the office of the liquidator at Jalpaiguri.

CHARU CHANDRA SEN, Liquidator.

Jalpaiguri, the 6th February 1935. (419—1)

In the matter of the Indian Companies Act, 1913, and

In the matter of the Wood Land Tea Company, Limited (in voluntary liquidation).

NOTICE is hereby given to the creditors of the abovenamed Company under section 209(*1*) of the Indian Companies Act, 1913, that a meeting of the creditors of the Company will be held on Tuesday, the 26th February 1935, at 8-30 a.m., at the office of the liquidator at Jalpaiguri.

CHARU CHANDRA SEN, Liquidator.

Jalpaiguri, the 30th January 1935. (420—1)

In the matter of the Indian Companies Act, 1913, and

In the matter of the Calcutta Warehousing and Clearing Co., Ltd. (in voluntary liquidation).

NOTICE is hereby given, pursuant to section 217 of the Indian Companies Act, VII of 1913, that a general meeting of the shareholders of the abovenamed Company will be held at No. 10, Kailas Bose Street, Calcutta, on 20th March 1935 at 7-30 p.m. when the liquidator will lay before the meeting the liquidated accounts.

A. N. DEY, Liquidator.

Calcutta, the 6th February 1935. (421—1)

In the matter of the Indian Companies Act, VII of 1913, and

In the matter of Dinabandhu Insurance Society (in liquidation).

NOTICE is hereby given that in an extraordinary general meeting of the members of the abovenamed society, held on the 19th January 1935, it has been resolved that it has been proved to the entire satisfaction of the meeting that the society cannot by reason of its liabilities continue its business and that it is advisable to wind up, and the society is hereby wound up voluntarily and that Mr. Gurudas Saha of Maijkhor, post office Kuti, district Tippera, be and is hereby appointed liquidator for the purpose of such winding up at a fixed remuneration of Rs. 50 only.

PYARI MOHAN SAHA, Chairman.

(406—1)

In the matter of the Indian Companies Act, 1913, and

In the matter of the Pabna Textile Mills, Ltd. (in liquidation).

PURSUANT to section 217 of the Indian Companies Act, notice is hereby given that a general meeting of the shareholders of the abovenamed Company will be held at the office of the joint liquidators on Wednesday, the 20th March 1935, at 3 p.m., when the liquidators will lay before the meeting an account of the winding up showing how the property of the Company has been disposed of and for considering and passing such resolution as may be thought fit regarding the disposal of the books.

PRAMODA CHARAN RAY,
BENOYENDRA LAL SANYAL,

Joint Liquidators.

Pabna, the 5th February 1935. (407—1)

In the matter of the Provident Insurance Societies Act, 1912 (V of 1912), and

In the matter of Prajapati Insurance Co., Ltd.

WHEREAS I am of opinion as the result of an inquiry held by Mr. H. L. Humphreys, an Inspector appointed by me under sub-section (*1*) of section 17 of the Provident Insurance Societies Act, 1912 (V of 1912), that the Prajapati Insurance Co., Ltd., having its registered office at Comilla, is insolvent or must necessarily become so and that the business of the said Prajapati Insurance Co., Ltd., is not conducted in accordance with its rules, and that the registration of the said Prajapati Insurance Co., Ltd., ought to be cancelled ;

Now, therefore, in exercise of the powers conferred by section 18 of the said Provident Insurance Societies Act, I hereby cancel the registration of the said Prajapati Insurance Co., Ltd.

And further, in exercise of the powers conferred by sub-section (*1*) of section 19 of the said Provident Insurance Societies Act, I hereby appoint Mr. B. Guha, G.D.A., R.A., of 30, Grosvenor House, Old Court House Street, Calcutta, to be the liquidator to wind up the said Prajapati Insurance Co., Ltd., at a remuneration of 5 per cent. of the realisations of the dues to the Company subject to the minimum of Rs. 100 to be paid out of the assets of the Company.

N. K. MAJUMDER, Registrar of
Provident Insurance Societies, Bengal.

Calcutta, the 4th February 1935.

In the matter of the Provident Insurance Societies Act, 1912 (V of 1912), and

In the matter of the National Benevolent Insurance, Limited.

WHEREAS I am of opinion as the result of an inquiry held by Mr. H. L. Humphreys, an Inspector appointed by me under sub-section (*1*) of section 17 of the Provident Insurance Societies Act, 1912 (V of 1912), that the National Benevolent Insurance, Limited, having its registered office at Kuti (Tippera), is insolvent or must necessarily become so and that the business of the said National Benevolent Insurance, Limited, is not conducted in accordance with its rules and that the registration of the said National Benevolent Insurance, Limited, ought to be cancelled :

Now, therefore, in exercise of the powers conferred by section 18 of the said Provident Insurance Societies Act, I hereby cancel the registration of the said National Benevolent Insurance, Limited.

And further, in exercise of the powers conferred by sub-section (*1*) of section 19 of the said Provident Insurance Societies Act, I hereby appoint Mr. N. N. Das, B. Sc., G.D.A., R.A., of 8-2, Hastings Street, Calcutta, to be the liquidator to wind up the said National Benevolent Insurance, Limited, at a remuneration of 5 per cent. of the realisations of the dues to the Company subject to the minimum of Rs. 100 to be paid out of the assets of the Company.

N. K. MAJUMDER, Registrar of
Provident Insurance Societies, Bengal.

Calcutta, the 4th February 1935.

In the matter of the Provident Insurance Societies Act, 1912 (V of 1912), and

In the matter of Shajahan Benefit Society.

WHEREAS I am of opinion as the result of an inquiry held by Mr. H. L. Humphreys, an Inspector appointed by me under sub-section (*1*) of section 17 of the Provident Insurance Societies Act, 1912 (V of 1912), that the Shajahan Benefit Society, having its registered office at Kuti (Tippera), is insolvent or must necessarily become so, and that the business of the said Shajahan Benefit Society is not conducted in accordance with its rules, and that the registration of the said Shajahan Benefit Society ought to be cancelled ;

Now, therefore, in exercise of the powers conferred by section 18 of the said Provident Insurance Societies Act, I hereby cancel the registration of the said Shajahan Benefit Society.

And further, in exercise of the powers conferred by sub-section (*1*) of section 19 of the said Provident Insurance Societies Act, I hereby appoint Mr. N. N. Das, B.Sc., G.D.A., R.A., of 8-2, Hastings Street, Calcutta, to be the liquidator to wind up the said Shajahan Benefit Society at a remuneration of 5 per cent. of the realisations of the dues to the Company subject to the minimum of Rs. 100 to be paid out of the assets of the Company.

N. K. MAJUMDER, Registrar of
Provident Insurance Societies, Bengal.

Calcutta, the 5th February 1935.

In the matter of the Provident Insurance Societies Act, 1912 (V of 1912), and

In the matter of Nabajiban Benefit Society.

WHEREAS I am of opinion as the result of an inquiry held by Mr. H. L. Humphreys, an Inspector appointed by me under sub-section (*1*) of section 17 of the Provident Insurance Societies Act, 1912 (V of 1912), that the Nabajiban Benefit Society, having its registered office at Comilla, is insolvent or must necessarily become so, and that the business of the said Nabajiban Benefit Society is not conducted in accordance with its rules and that the registration of the said Nabajiban Benefit Society ought to be cancelled :

Now, therefore, in exercise of the powers conferred by section 18 of the said Provident Insurance Societies Act, I hereby cancel the registration of the said Nabajiban Benefit Society.

And further, in exercise of the powers conferred by sub-section (*1*) of section 19 of the said Provident Insurance Societies Act, I hereby appoint Mr. N. N. Das, B.Sc., G.D.A., R.A., of 8-2, Hastings Street, Calcutta, to be the liquidator to wind up the said Nabajiban Benefit Society at a remuneration of 5 per cent. of the realisations of the dues to the Company subject to the minimum of Rs. 100 to be paid out of the assets of the Society.

N. K. MAJUMDER, Registrar of
Provident Insurance Societies, Bengal.

Calcutta, the 5th February 1935.

In the matter of the Provident Insurance Societies Act, 1912 (V of 1912), and

In the matter of the Minerva Insurance Society.

WHEREAS I am of opinion as the result of an inquiry held by Mr. H. L. Humphreys, an Inspector appointed by me under sub-section (*1*) of section 17 of the Provident Insurance Societies Act, 1912 (V of 1912), that the Minerva Insurance Society, having its registered office at Kuti, Tippera, is insolvent or must necessarily become so, and that the business of the said Minerva Insurance Society is not conducted in accordance with its rules and that the registration of the said Minerva Insurance Society ought to be cancelled :

Now, therefore, in exercise of the powers conferred by section 18 of the said Provident Insurance Societies Act, I hereby cancel the registration of the said Minerva Insurance Society.

And further, in exercise of the powers conferred by sub-section (*1*) of section 19 of the said Provident Insurance Societies Act, I hereby appoint Mr. B. Guha, G.D.A., R.A., of 30, Grosvenor House, Old Court House Street, Calcutta, to be the liquidator to wind up the said Minerva Insurance Society at a remuneration of 5 per cent. of the realisations of the dues to the Company subject to the minimum of Rs 100 to be paid out of the assets of the Society.

N. K. MAJUMDER, Registrar of
Provident Insurance Societies, Bengal,

Calcutta, the 5th February 1935.

In the matter of the Provident Insurance Societies Act, 1912 (V of 1912), and

In the matter of the Deshabandhu Sammilany.

WHEREAS I am of opinion as the result of an inquiry held by Mr. H. L. Humphreys, an Inspector appointed by me under sub-section (*1*) of section 17 of the Provident Insurance Societies Act, 1912 (V of 1912), that the Deshabandhu Sammilany, having its registered office at Comilla, is insolvent or must necessarily become so, and that the business of the said Deshabandhu Sammilany is not conducted in accordance with its rules, and that the registration of the said Deshabandhu Sammilany ought to be cancelled :

Now, therefore, in exercise of the powers conferred by section 18 of the said Provident Insurance Societies Act, I hereby cancel the registration of the said Deshabandhu Sammilany.

And further, in exercise of the powers conferred by sub-section (*1*) of section 19 of the said Provident Insurance Societies Act, I hereby appoint Mr. N. N. Das, B.Sc., G.D.A., R.A., of 8-2, Hastings Street, Calcutta, to be the liquidator to wind up the said Deshabandhu Sammilany, at a remuneration of 5 per cent. of the realisations of the dues to the Company subject to the minimum of Rs. 100 to be paid out of the assets of the Company.

N. K. MAJUMDER, Registrar of
Provident Insurance Societies, Bengal.

Calcutta, the 5th February 1935.

In the matter of the Indian Companies Act, 1913 (VII of 1913), and

In the matter of the Jatindra Mohan Cotton Mills, Ltd.

NOTICE is hereby given that, on the expiration of three months from date, the name of the Jatindra Mohan Cotton Mills, Ltd., will, unless cause is shown to the contrary, be struck off the register, and the Company will be dissolved.

N. K. MAJUMDER, Registrar
of Companies under Act VII of 1913.

Calcutta, the 7th February 1935.

In the matter of the Indian Companies Act, 1913 (VII of 1913), and

In the matter of Dharampore Farm and Dairy Co., Ltd.

NOTICE is hereby given that, on the expiration of three months from date, the name of Dharampore Farm and Dairy Co., Ltd., will, unless cause is shown to the contrary, be struck off the register, and the Company will be dissolved.

N. K. MAJUMDER, Registrar
of Companies under Act VII of 1913.

Calcutta, the 7th February 1935.

In the matter of the Indian Companies Act, 1913 (VII of 1913), and

In the matter of the Bengal Textile Printers, Ltd.

NOTICE is hereby given that, on the expiration of three months from date, the name of the Bengal Textile Printers, Ltd., will, unless cause is shown to the contrary, be struck off the register, and the Company will be dissolved.

N. K. MAJUMDER, Registrar
of Companies under Act VII of 1913.

Calcutta, the 7th February 1935.

In the matter of the Indian Companies Act, 1913 (VII of 1913), and

In the matter of Indian Dairy Products Co., Ltd.

NOTICE is hereby given that, on the expiration of three months from date, the name of Indian Dairy Products Co., Ltd., will, unless cause is shown to the contrary, be struck off the register, and the Company will be dissolved.

N. K. MAJUMDER, Registrar
of Companies under Act VII of 1913.

Calcutta, the 7th February 1935.

In the matter of the Indian Companies Act, 1913 (VII of 1913), and

In the matter of the Peaces Slipway and Engineering Works, Ltd.

NOTICE is hereby given that, on the expiration of three months from date, the name of the Peaces Slipway and Engineering Works, Ltd., will, unless cause is shown to the contrary, be struck off the register, and the Company will be dissolved.

N. K. MAJUMDER, Registrar
of Companies under Act VII of 1913.

Calcutta, the 7th February 1935.

In the matter of the Indian Companies Act, 1913 (VII of 1913), and

In the matter of Langer Carey and Co., Ltd.

NOTICE is hereby given that, on the expiration of three months from date, the name of Langer Carey & Co., Ltd., will, unless cause is shown to the contrary, be struck off the register, and the Company will be dissolved.

N. K. MAJUMDER, Registrar
of Companies under Act VII of 1913.

Calcutta, the 7th February 1935.

In the matter of the Indian Companies Act, 1913 (VII of 1913), and

In the matter of Paris Collapsible Gate and Co., Ltd.

NOTICE is hereby given that the name of Paris Collapsible Gate & Co., Ltd., has, this day in pursuance of section 247 of the Act, been struck off the register and that the Company is dissolved.

N. K. MAJUMDER,
Registrar, Joint Stock Companies.

Calcutta, the 7th February 1935.

Imperial Library.

(Secretariat Buildings, 6, Esplanade East, Calcutta)
Open on—

Week days and Saturdays from 10 a.m. to 7 p.m.
Sundays and Gazetted holidays from 2 p.m. to 5 p.m.

THE Imperial Library is also a Lending Library. It is free to all except children. There is no subscription to pay.

K. M. ASADULLAH, Librarian.

Proclamation of Sale.

[See Rule 29.]

NOTICE is hereby given that, under rule 28 in Schedule II to the Bengal Public Demands Recovery Act, 1913, an order has been passed by me for the sale of the property mentioned in the annexed schedule, in satisfaction of the claim of the certificate-holder under the certificate mentioned below amounting, with costs and interest up to date of sale, to the sum of Rs. 132-11-8—

Certificate No. 14M. of 1933-34, under which State Secretary is the certificate-holder and Sudhirendra Kumar Sannyal and another are the certificate-debtors.

The sale will be by public auction, and the property will be put up for sale in the lots specified in the schedule. The sale will be of the property of the certificate-debtors abovenamed as mentioned in the schedule below.

In the absence of any order of postponement, the sale will be held by the undersigned at 12 o'clock on the 18th March 1935 at the Malda Certificate Court. In the event, however, of the debt above specified, and of the costs of the sale, being tendered or paid before the knocking down of any lot, the sale will be stopped.

At the sale the public generally are invited to bid, either personally or by duly authorised agent. The following are the further conditions of sale :—

1. The particulars specified in the schedule below have been stated to the best of the information of the Certificate Officer; but the Certificate Officer will not be answerable for any error, misstatement or omission in this proclamation.
2. The amount by which the biddings are to be increased shall be determined by the officer conducting the sale. In the event of any dispute arising as to the amount bid, or as to the bidder, the lot shall at once be again put up to auction.
3. The highest bidder shall be declared to be the purchaser of any lot, provided always that he is legally qualified to bid, and provided that it shall be in the discretion of the officer holding the sale to decline acceptance of the highest bid when the price offered appears so clearly inadequate as to make it advisable to do so.
4. For reasons recorded, it shall be in the discretion of the officer conducting the sale to adjourn it, subject always to the provisions of rule 32 in Schedule II to the Bengal Public Demands Recovery Act, 1913.
5. In the case of movable property, the price of each lot shall be paid at the time of sale or as soon after as the officer holding the sale directs, and in default of payment the property shall forthwith be again put up and re-sold.
6. In the case of immovable property, the persons declared to be the purchaser shall pay immediately after such declaration a deposit of 25 per cent. on the amount of his purchase-money to the officer conducting the sale, and in default of such deposit the property shall forthwith be put up again and re-sold.
7. The full amount of the purchase-money shall be paid by the purchaser before the office of the Certificate Officer closes on the fifteenth day after the sale of the property, exclusive of such day, or if the fifteenth day be a Sunday or other holiday, then on the first office day after the fifteenth day.
8. In default of payment of the balance of the pruchase-money within the period allowed the property shall be re-sold after the issue of a fresh notification of sale. The deposit, after defraying the expenses of the sale, may, if the Certificate Officer thinks fit, be forfeited to the Government, and the defaulting purchaser shall forfeit all claims to the property or to any part of the sum for which it may be subsequently sold.

Given under my hand and seal, this 5th day of February 1935.

[ILLEGIBLE], Certificate Officer, Malda.

Schedule of Property.

Number of lot.	Description of property to be sold, with the name of each owner where there are more certificate-debtors than one.	The revenue assessed upon the estate or part of the estate if the property to be sold is an interest in an estate or a part of an estate paying revenue to the Government.	Claims (if any) which have been put forward to the property, and any other known particulars bearing on its nature and value.
1	2	3	4
1	16 annas share of tauzi No. 268 borne on the Revenue Roll of the Murshidabad Collectorate. Total area of the estate 1,308·08 acres.	Rs. 795-4 ..	Nil

CERTIFICATE CASE No. 280 OF 1934-35.

Demand- Rs. 2,269-5-1.

Date of sale -26th February 1935.

Time—12 noon.

Place—Settlement Office, Malda.

Certificate-holder—State Secretary.

Certificate-debtors—(1) Mohini Mohan Misra, son of Gopi Nath Misra, (2) Manmatha Nath Misra, son of Rai Mohan Misra, village and police-station Harishchandrapur, district Malda.

Description of property.

Thana Ratua, district Malda Collectorate.

Name of mahal.	Tauzi No.	Khatian No.	Share.	Area.	Revenue.	Name of mauza and No.
			Rs. a. g. k. kra. til.		Rs. a. p.	
(1) Zamindary Taraf Haripur ..	86	1/ক	0 7 0 0 0 4	276·68	14 9 0	Haripur, 99.
(2) Dayemi Mahal Bhaluka Ray	27	1/খ	0 6 10 0 0 0	315·24	1,070 10 0	Okharachandpara, 64.
(3) Pattani Gopi Mohan Misra and others.	27	2	1 0 0 0 0 0	60·33	Rent— 216 0 0	Ditto.
(4) Ditto ..	27	3	1 0 0 0 0 0	145·98	Rent— 551 0 0	Ditto.
(5) Ditto ..	27	5	1 0 0 0 0 0	157·60	574 8 0	Ditto.
(6) Zamindary Taraf Harish-chandrapur.	82	6/ক	0 9 11 1 2 0	466·70	2,763 14 7	Ditto.
(7) Zamindary Kismath Taraf Malior.	168	1/ক	0 4 0 0 0 0	152·57	983 13 9	Harinkal, 44.
(8) Ditto ..	168	1/ক	0 4 0 0 0 0	112·03	983 13 9	Rampur, 41.

Thana Harishchandrapur, district Malda Collectorate.

(9) Zamindary Taraf Harish-chandrapur.	82	2/ক	0 9 11 1 2 0	320·21	2,763 14 7	Masaldaha, 178.
(10) Zamindary Kismat Taraf Mahendrapur.	158	1/ক	0 10 13 1 1 0	244·03	1,171 2 3	Mungal, 100.

Malda, the 6th February 1935.

H. L. DAS GUPTA, Assistant Settlement Officer-in-charge.

CINCHONA FACTORY PRODUCTS.

By order of the Government of Bengal Cinchona Factory Products as manufactured and packed at the Cinchona Factory, Mungpoo, Darjeeling district, will be sold and distributed by the Superintendent of the **Presidency Jail,** *in original packages* as received from the Mungpoo Factory, at the rates herein noted **from the 1st May 1926 :—**

Quinine Sulphate.

For 60 lbs. and upwards at a time .. Rs. 18 per lb.
For 6 lbs. and over but less than 60 lbs. at a time .. .. .. „ 19 „
For any quantity less than 6 lbs. .. „ 20 „

Quinine Bisulphate.

Irrespective of quantity .. Rs. 20 per lb.

Quinine Hydrobromide.

Irrespective of quantity .. Rs. 25 per lb.

Quinine Salicylate.

Irrespective of quantity .. Rs. 26 per lb.

Quinine Bihydrobromide.

Irrespective of quantity .. Rs. 28 per lb.

Totaquina.

Irrespective of quantity .. Rs. 13·8 per lb.

Quinine Hydrochloride.

For 60 lbs. and upwards at a time .. Rs. 23 per lb.
For 6 lbs. and over but less than 60 lbs. at a time .. .. .. „ 24 „
For any quantity less than 6 lbs. .. „ 25 „

Quinine Di-Hydrochloride.

For 60 lbs. and upwards at a time .. Rs. 25 per lb.
For 6 lbs. and over but less than 60 lbs. at a time .. .. .. „ 26 „
For any quantity less than 6 lbs. .. „ 27 „

Quinidine Sulphate.

For 60 lbs. and upwards at a time .. Rs. 20 per lb.
For 6 lbs. and over but less than 60 lbs. at a time .. .. .. „ 21 „
For any quantity less than 6 lbs. .. „ 22 „

Cinchonidine Sulphate.

For 60 lbs. and upwards at a time .. Rs. 25 per lb.
For 6 lbs. and over but less than 60 lbs. at a time .. .. .. „ 26 „
For any quantity less than 6 lbs. .. „ 27 „

Cinchonine Sulphate.

For 60 lbs. and upwards at a time .. Rs. 12 per lb.
For 6 lbs. and over but less than 60 lbs. at a time .. .. .. „ 13 „
For any quantity less than 6 lbs. .. „ 14 „

Cinchona Febrifuge (Powder).

For 60 lbs. and upwards at a time .. Rs. 9 per lb.
For 6 lbs. and over but less than 60 lbs. at a time .. .. .. „ 9 „
For any quantity less than 6 lbs. .. „ 10 „

Cinchona Febrifuge (Tablets).

For 60 lbs. and upwards at a time .. Rs. 10 per lb.
For 6 lbs. and over but less than 60 lbs. at a time .. .. .. „ 10 „
For any quantity less than 6 lbs. .. „ 11 „

Quinoidine (Tablets).

For 60 lbs. and upwards at a time .. Rs. 5 per lb.
For 6 lbs. and over but less than 60 lbs. at a time .. .. .. „ 5 „
For any quantity less than 6 lbs. .. „ 6 „

Quinoidine (in Mass).

For 60 lbs. and upwards at a time .. Rs. 4 per lb.
For 6 lbs. and over but less than 60 lbs. at a time .. .. .. „ 4 „
For any quantity less than 6 lbs. .. „ 5 „

Cinchona Bark (in 50 pound original bags).

Per bag .. .. .. Rs. 25.

Quinine Tablets — per box of 200 tablets each.
Rs. 2-8 (Bengal), Rs. 3 (outside Bengal)
Rs. 15-8-0 per lb.

Transit charges extra in every case.

Quinine Sulphate is for sale to Government Institutions and Missionaries only. It is not for sale to Private Firms or the General Public.

Cinchona Febrifuge in Powder and Tablet form (when in stock) is for sale to Government Institutions, Missionaries and the General Public.

Quinine Sulphate will be supplied to Hospitals and Dispensaries of this Presidency only at the wholesale rate of Rs. 13 per lb., irrespective of quantities. For all other purchasers the rates given above will apply.

Five and ten boxes of Quinine Tablets are sold to the public at the concession rates which will be intimated on application.

Provinces other than Bengal, Bihar and Orissa and Assam will get their supplies of Sulph. Quinine from the Director, Botanical Survey of India, Sibpur, Howrah.

Local sale at the jail gate from 10 to 12 noon.

The system of payment is by—*Cash in advance*—by "*Treasury Challans,*" which should accompany the order or indent.

In cases where this is not possible, payment should be made by "*Remittance Transfer Receipts*" or crossed "*Cheques.*"

Indents unaccompanied by cash in advance will be sent Value Payable Post. Credit sale is not allowed except under special circumstances.

In the case of *Government officers* payments will be recovered by *Book Transfer, i.e., Countersigned Invoices,* in the event of *Cash* not accompanying the indent by "*Treasury Challans,*" *Remittance Transfer Receipt or Cheque.*

2. Price and postage must accompany the price of the drug (when the drug is required by post).

The name of the Railway and Steamer Station or Post Office must be written distinctly when the parcels are required by Rail, Steamer or by Post. Railway parcels are sent by passenger train only.

A scale of postage is given below.

	1 oz.	2 ozs.	4 ozs.	½ lb.	¾ lb.	1 lb.
	As.	As.	As.	As.	As.	Rs. A.
Quinine Sulph. ..	..	..	7	7	11	0 11
Cinchona Feb. ..	..	..	7	7	11	0 11
Cinchona Feb. Tablets	..	..	7	7	11	0 11
Quinoidine Tablets ..	..	..	..	..	..	1 13
Quinine Hydrochlor. ..	5	5	7	7	..	0 11
Quinine Di-hydrochlor.	5	5	7	7	..	0 11
Quinine Tablets ..	..	..	7	7	11	0 11

	1½ lb.	2 lb.	3 lb.	4 lb.	5 lb.	6 lb.
	Rs. A.	Rs. A.	Rs. A.	Rs. A.	Rs. A.	Rs. A.
Quinine Sulph. ..	0 15	1 3	1 7	1 15	2 7	2 15
Cinchona Feb. ..	0 15	0 15	1 7	1 11	1 15	2 7
Cinchona Feb. Tablets	1 3	1 3	1 11	1 15	2 7	2 15
Quinoidine Tablets ..	..	2 3	3 3	..	..	..
Quinine Hydrochlor. ..	1 1	0 15	1 7	1 11	..	..
Quinine Di-hydrochlor.	1 1	0 15	1 13	2 5	..	..
Quinine Tablets ..	0 15	0 14	1 7	1 11	1 15	2 3

Two different drugs are not packed in the same parcel and postage must be paid separately for each kind.

N.B.—Postage stamps are not accepted as revenue.

Government reserve the right to alter the price without notice.

Registered No. C207

The Calcutta Gazette

THURSDAY, FEBRUARY 14, 1935.

PART IV

Bills introduced in the Bengal Legislative Council, Reports of Select Committees presented or to be presented to that Council, and Bills published before introduction in that Council.

GOVERNMENT OF BENGAL.

Legislative Department.

NOTIFICATION.

No. 137L.—11th February, 1935.—His Excellency the Governor having been pleased to order, under rule 18 of the Bengal Legislative Council Rules, 1920, the publication of the following Bill, together with the Statement of Objects and Reasons which accompanies it, in the *Calcutta Gazette*, the Bill and the Statement of Objects and Reasons are accordingly hereby published for general information.

CONTENTS.

CLAUSE.

1 Short title, extent and commencement.
2 Definitions.
3 Notification of intention to impose improvement levy.
4 Publication of particulars.
5 Abandonment of intention or declaration of decision to impose an imposition of improvement levy.
6 Estimate of increased outturn of agricultural produce.
7 Fixing value for agricultural produce in benefited area.
8 Maximum limit and incidence of improvement levy on agricultural lands.
9 Maximum limit and incidence of the improvement levy on non-agricultural land.
10 Preparation and publication of statements of imposition of improvement levy.
11 Appeals regarding the improvement levy.
12 Other objections barred.
13 Confirmation or modification of statement.
14 Copies of entries in statement.
15 Power of Collector to grant abatement or remission of improvement levy.
16 Recovery of improvement levy.
17 Recovery of arrears and other dues.
18 Power to enter on land and to cut and remove crops.
19 Power to enforce attendance of witnesses and production of documents.
20 Supply of water and application of rules under the Bengal Irrigation Act, 1876.
21 Right to supply of water.
22 Power to carry out drainage works.
23 Power to prohibit, remove or modify obstruction to the passage of water in channels.
24 Power to modify obstructions to the passage of water through or over land.
25 Notification of dead or decayed rivers.
26 Limitations of claims for compensation.
27 Claims for compensation.
28 Procedure for determining compensation.
29 Appeal from certain decisions and orders of Collector.
30 Restrictions on enhancing rent of agricultural lands in benefited area.
31 Publication of notifications in the benefited area.
32 Indemnity.
33 Rules.

THE BENGAL DEVELOPMENT BILL, 1935.

A

BILL

to provide for the development of lands in Bengal and to impose a levy in respect of increased profits resulting from improvement works constructed by the Government.

WHEREAS it is expedient with a view to the development of land in Bengal to impose a levy in respect of increased profits resulting from improvement works constructed by the Government and to provide further powers in regard to such works ;

AND WHEREAS the previous sanction of the Governor General has been obtained under sub-section (*3*) of section 80A of the Government of India Act to the passing of this Act ; 5 & 6 Geo. V, c. 61. 6 & 7 Geo. V, c. 37, 9 & 10 Geo. V, c. 101.

It is hereby enacted as follows :—

Short title, extent and commencement.

1. (*1*) This Act may be called the Bengal Development Act, 1935.

(*2*) It extends to the whole of Bengal.

(*3*) It shall come into force on such date as the Local Government may, by notification, appoint.

Definitions.

2. In this Act, unless there is anything repugnant in the subject or context,—

(*1*) "benefited area" means any area in respect of which a notification has been issued under sub-section (*2*) of section 5, and includes any part of such area ;

(*2*) "Collector" includes any officer specially appointed by the Local Government to perform the functions of a Collector under this Act ;

(*3*) "dead or decayed river" includes any river into which, or along any part of which, water has ceased to flow as freely as it would have flowed if it had not been diverted or obstructed whether owing to natural causes or as a result of interference by man, and includes also any depression which at one time formed part of a river-bed but in which there is no longer any flow of water ;

(*4*) "improvement work" means any work of improvement constructed by the Government which the Local Government has, by notification, declared to be an improvement work for the purposes of this Act ;

(*5*) "notification" means a notification published in the *Calcutta Gazette* ;

(*6*) "period for objection" means a period to be mentioned in a notification under section 3, sub-section (*2*) of section 6, sub-section (*1*) of section 7 or sub-section (*1*) of section 25 within which objections or suggestions will be considered by the Local Government ; and

(*7*) "prescribed" means prescribed by rules made under this Act.

The Bengal Development Bill, 1935.

(Clauses 3—6.)

Notification of intention to impose improvement levy.

3. Whenever the Local Government has constructed, or contemplates constructing, any improvement work which in the opinion of the Local Government has increased or is likely to increase the profit from the agricultural produce from any land or to increase the outturn of such produce, or the profits from any land not used for agricultural purposes, within any area, the Local Government may, by notification, declare its intention to impose an improvement levy within that area.

Publication of particulars.

4. A notification under section 3 shall state the following particulars—

(*a*) a brief description of the improvement work which has been, or is proposed to be, constructed ;

(*b*) the object for which such work has been, or is proposed to be, constructed ; and

(*c*) the boundaries of the area within which the Local Government intends to impose the improvement levy.

Abandonment of intention or declaration of decision to impose and imposition of improvement levy.

5. (*1*) After the expiry of a period of objection to be mentioned in a notification under section 3 the Local Government shall consider the objections and suggestions, if any, received by it and thereafter shall, by notification, declare its intention either wholly to refrain from imposing the improvement levy or to impose the same with or without modification, in the area concerned, and such declaration shall be final and shall not be questioned in any Court or in any other manner whatsoever.

(*2*) At any time after the issue of a notification under sub-section (*1*) declaring the intention of the Local Government to impose an improvement levy, the Local Government may, by notification—

(*a*) declare the area concerned to be a benefited area, whereupon such area shall, for the purpose of this Act, be deemed to be a benefited area, and the issue of a notification under this sub-section shall be conclusive proof that the work in question has benefited or will benefit that area ;

(*b*) impose the improvement levy in the area concerned from such date as may be specified in the notification ;

(*3*) The Local Government may, so far as may be in the manner hereinbefore provided, from time to time revise the boundaries of a benefited area so as to include or exclude any area to which, in the opinion of the Local Government, the benefits in question extend or do not extend, as the case may be.

Estimate of increased outturn of agricultural produce.

6. (*1*) From time to time an officer appointed by the Local Government shall, in accordance with rules made under this Act, prepare in relation to land throughout a benefited area an estimate of the average increase in the outturn of the agricultural produce from land of any class which, in his opinion, has been, or is likely to be, made possible by any improvement work, on the assumption that the land has produced and will produce the staple food crop notified under section 39 of the Bengal Tenancy Act, 1885, in respect of that land : Act VIII of 1885.

Provided that the Local Government may, at its discretion, direct that the estimate be made without such assumption.

(*2*) The Local Government shall, by notification, publish such estimate and after a period for objection to be specified in such notification shall consider the objections and suggestions, if any, received by it and shall, by notification, either wholly accept or reject the

The Bengal Development Bill, 1935.

(Clauses 7, 8.)

estimate or accept it with such modifications as may be specified in the notification, whereupon the accuracy of such estimate, as accepted, shall not be questioned in any Court or in any other manner whatsoever.

Fixing value for agricultural produce in benefited area.

7. (*1*) From time to time the Local Government may, by notification (hereinafter in this section referred to as the preliminary notification), publish a figure which it intends to fix, for such period not exceeding ten years as may be specified in the notification, for the value per acre of the outturn of the agricultural produce from land of any class in any benefited area for the purposes of this Act.

(*2*) After a period for objection to be mentioned in the preliminary notification the Local Government shall consider the objections and suggestions, if any, received by it and thereafter shall, by notification, fix, for a period not exceeding that specified in the preliminary notification, a figure, not exceeding that specified in the preliminary notification, for the value per acre of the outturn of the agricultural produce from land of any class in the area specified in the preliminary notification, whereupon the accuracy of such figure shall not be questioned in any Court or in any other manner whatsoever.

(*3*) When the increase in the outturn of the agricultural produce is estimated under sub-section (*1*) of section 6 on the assumption that the land produces the staple food-crop notified under section 39 of the Bengal Tenancy Act, 1885, the figure fixed under this section for the value of the outturn shall not exceed the sum of— Act VIII of 1885.

(*a*) the value of the grain calculated on the average, for the ten years immediately preceding the year in which the figure is fixed, of the prices published under sub-section (*4*) of section 39 of the Bengal Tenancy Act, 1885, for such staple crop, and

(*b*) the value of the straw calculated in such manner as may be prescribed.

Maximum limit and incidence of improvement levy on agricultural lands.

8. (*1*) Notwithstanding anything contained in any other Act the improvement levy shall, as regards agricultural lands within any benefited area, be imposed for such period at such rate (not exceeding one-half of the estimated increased profits, resulting from an improvement work or one-half of the net value of the estimated increase in outturn) as the Local Government may, by notification, from time to time declare, and shall be payable by the occupiers of such lands.

Explanation.—In this sub-section the expression "estimated increase in outturn" means the average increase in the outturn of agricultural produce as estimated under section 6.

(*2*) For the purposes of sub-section (*1*) the increased profits and the net value of the estimated increase in outturn shall be estimated, in accordance with rules made under this Act, on the figure fixed under section 7.

(*3*) The Local Government may, by rules made under this Act, declare what persons or classes of persons shall be deemed, for the purposes of sub-section (*1*), to be occupiers of land, and prescribe what proportion of the improvement levy different classes of occupiers shall, notwithstanding any contract to the contrary, be liable respectively to pay.

(*4*) Without prejudice to the generality of the power conferred by sub-section (*3*), the Local Government may under that sub-section declare that any person who, under the system generally known as "*adhi*," "*barga*" or "*bhag*," cultivates the land of another person on condition of delivering a share of the produce to that person or receiving a share thereof from him, shall be deemed to be an occupier.

The Bengal Development Bill, 1935.

(Clauses 9—11.)

(*5*) Any contract empowering an occupier to recover from another occupier any amount, or part of any amount, recovered or recoverable under section 16 shall, to that extent, be void.

Maximum limit and incidence of the improvement levy on non-agricultural land.

9. (*1*) Notwithstanding anything contained in any other Act, the improvement levy shall be imposed as regards land not used for agricultural purposes within any benefited area for such period and at such rate (not exceeding one-half of the net increased profits as ascertained or estimated under sub-section (*2*) which result from an improvement work in the profits from such land whether such profits be capital or recurring profits) as the Local Government may, by notification, from time to time declare and shall be payable by the persons who receive such profits.

(*2*) The Collector may from time to time, in accordance with rules made under this Act, exercise the following powers, namely :—

(*a*) he may decide whether any piece of land within a benefited area is to be deemed to be land not used for agricultural purposes ;

(*b*) he may decide what persons or classes of persons shall be deemed for the purposes of this section to be in receipt of profits from any land not used for agricultural purposes ;

(*c*) he may call upon any person who, in his opinion, is receiving or likely to receive profits in connection with such land, to submit to him within a specified period a written statement with such particulars as the Collector may specify relating to such profits ;

(*d*) if such a written statement is not submitted within the specified period or if the Collector is not satisfied that the profits received in connection with such land have been fully and correctly shown in such written statement, he may proceed to prepare an estimate of the increased profits which result from the improvement work ;

(*e*) he may permit any person to commute his liability for payment of the improvement levy in respect of any such land on such terms as may be settled by agreement, and thereafter no liability for payment of improvement levy shall attach to such land unless the profits from it are further increased by fresh improvement works.

Preparation and publication of statements of imposition of improvement levy.

10. The Collector shall from time to time prepare and publish in the prescribed form and manner a statement showing—

(*a*) the names of persons who are liable to pay the improvement levy in respect of any lands within a benefited area, and

(*b*) the amount of improvement levy to be imposed annually or otherwise in respect of such lands,

and may from time to time revise such statement in the prescribed manner.

Appeals regarding the improvement levy.

11. (*1*) Any person may appeal to the prescribed appellate authority—

(*a*) within thirty days of the date of any decision or order of the Collector under clause (*a*), clause (*b*) or clause (*d*) of sub-section (*2*) of section 9, if he is aggrieved by such decision or order, or

The Bengal Development Bill, 1935.

(*Clauses 12—16.*)

(*b*) within thirty days of the date of the publication of the statement under section 10 if he objects to the amount of improvement levy imposed on him under that section, on the ground that he has been wrongly shown in the statement as liable to pay the improvement levy or that the amount shown as payable by him is incorrect,

and the order of the appellate authority on any such appeal shall be final.

(*2*) In every appeal the costs shall be at the discretion of the appellate authority.

Other objections barred.

12. No objection shall be taken to the imposition of the improvement levy under this Act, nor shall the liability of any person to pay the same be questioned in any other manner than that provided in this Act. [*Cf.* U. P Act I of 1920, s. 22.]

Confirmation or modification of statement.

13. After forty days from the date of publication of the statement under section 10 the Collector shall confirm the statement in regard to all entries therein except those in respect of which appeals have been made under sub-section (*1*) of section 11 and after the disposal of each appeal he shall either confirm the relevant entries in the statement or make such modifications therein as may be necessitated by the decision of the appellate authority.

Each entry shall upon such confirmation or modification be presumed to be correct in every particular for the purposes of this Act.

Copies of entries in statement.

14. Copies of entries as originally made in the statement prepared under section 10, or as confirmed or modified under section 13, shall be made available to the persons to whom they relate in the prescribed manner on payment of the prescribed fee.

Power of Collector to grant abatement or remission of improvement levy.

15. Notwithstanding anything contained in this Act, the Collector may, subject to rules made by the Local Government, at any time grant abatement or remission of the improvement levy payable under this Act. [*Cf.* Bon. Act IX of 1880, s. 107 N.]

Recovery of improvement levy.

16. (*1*) Subject to the provisions of section 15, the Collector shall recover in the prescribed manner from the person concerned the amount of the improvement levy as confirmed or modified under section 13 together with any interest thereon due from him.

(*2*) If the improvement levy or any instalment thereof due from any person is not paid within the prescribed time, interest at the prescribed rate upon the amount outstanding shall, subject to the provisions of the Bengal Public Demands Recovery Act, 1913, be payable from the time of such default. Ben. Act III of 1913.

(*3*) The Local Government may employ such agency, other than the Collector, as it may consider desirable for the recovery of the improvement levy in the prescribed manner, and may pay the charges of collection at the prescribed rate to such agency from the amount recovered.

(*4*) Any agency employed under sub-section (*3*) by the Local Government to recover the improvement levy may recover the amount of such levy together with all interest due thereon as though it were a debt due to such agency or an arrear of rent due to such agency on account of the land in respect of which such levy is payable.

(*5*) If such agency makes default in the recovery or payment to the Local Government of the improvement levy the amount of such default shall be recoverable from such agency by the Collector as a public demand.

The Bengal Development Bill, 1935.

(Clauses 17—20.)

Recovery of arrears and other dues.

17. All arrears of improvement levy together with interest due thereon and all costs incurred and other dues payable to the Local Government under this Act shall be recoverable as public demands.

Power to enter on land and to cut and remove crops.

18. (*1*) If, in the opinion of the Local Government, it is desirable for the purpose of collecting information in connection with the preparation of an estimate under section 6 or section 9, the Local Government may, by general or special order, authorise any officer and his servants and workmen, subject to rules made under this Act, to enter upon any land situated within a benefited area and to do any acts necessary for the purpose of obtaining such information : [*Cf.* Act I of 1894, s. 4.]

Provided that no person shall enter into any building or upon any enclosed courtyard or garden attached to a dwelling house (except with the consent of the occupier thereof) without previously giving such occupier at least seven days' notice in writing of his intention to do so.

(*2*) If, in the opinion of any officer authorised under sub-section (*1*), it is necessary to remove any crop for the purpose of ascertaining by weighment or otherwise the amount of the produce derived from any land situated within an area notified under section 3 or within a benefited area, he may, subject to rules made under this Act, and after giving notice in writing, forthwith take possession of any standing crop on such land or part thereof and may cause such crop to be cut and to be removed within such reasonable period as he may consider necessary. [*Cf.* Act I of 1894, s. 7(*3*).]

(*3*) In every case under sub-section (*2*) such officer shall offer to the persons interested compensation for the standing crop cut and, subject to the prescribed restrictions, for any other damage caused during the process of cutting and removal ; and if such offer is not accepted the value of the crop cut and the amount of the damage so caused shall be assessed by the Collector in the prescribed manner.

Power to enforce attendance of witnesses and production of documents.

19. (*1*) Subject to rules made under this Act any officer authorised under sub-section (*1*) of section 18 may, by notice, require any person to make and deliver to him a statement or to produce records or documents relating to any land mentioned in that sub-section, at a time and place specified in the notice.

(*2*) Every person required to make or deliver a statement or to produce any record or document under this section shall be deemed legally bound to do so within the meaning of sections 175 and 176 of the Indian Penal Code. Act XLV of 1860.

(*3*) For the purpose of any enquiry under this Act the Collector shall have power to summon and enforce the attendance of witnesses including the persons interested or any of them and to compel the production of documents by the same means and so far as may be, in the same manner as is provided in the case of a Civil Court under the Code of Civil Procedure, 1908. [*Cf.* Act I of 1894, s. 14.] Act V of 1908.

Supply of water and application of rules under the Bengal Irrigation Act, 1876.

20. (*1*) Within a benefited area water may be supplied from a canal to any land notwithstanding the fact that no application has been made under section 74 of the Bengal Irrigation Act, 1876. Ben. Act III of 1876.

(*2*) In any benefited area specified by the Local Government, by notification, in this behalf any person by whom an improvement levy is payable under section 8 of this Act shall be subject to the provisions of any rules made under the Bengal Irrigation Act, 1876, for the time being in force, as if he had presented an application under section 75 of the said Act and such application had been granted.

The Bengal Development Bill, 1935.

(*Clauses 21—25.*)

Right to supply of water.

21. Notwithstanding anything contained in the Bengal Irrigation Act, 1876, no person shall have a right to a supply of water under that Act in a benefited area except within the prescribed period.

Power to carry out drainage works.

22. Whenever it appears expedient to carry out any scheme of drainage for the betterment of public health or for the improvement of any land or in connection with irrigation works, the Local Government may, after issuing a notification and calling for and considering objections, cause such a scheme to be drawn up and carried into execution, and any officer authorised in this behalf by the Local Government may exercise in connection with such scheme all or any of the powers conferred on Canal Officers by sections 33, 34 and 35, and shall be liable to any or all of the obligations imposed on Canal Officers by sections 36 and 37 of the Bengal Irrigation Act, 1876. Ben. Act III of 1876.

Power to prohibit, remove or modify obstructions to the passage of water in channels.

23. The Local Government may, if it is of opinion that in any area to be specified in a notification the whole or part of any river, stream, natural water-channel or natural drainage-course should be open to the unrestricted passage of water, exercise such powers as may be exercised under the Bengal Irrigation Act, 1876, with regard to the prohibition, removal or modification of obstructions in any river, stream, natural water-channel or natural drainage-course, and the provisions contained in that Act with regard to the exercise of such powers shall be applicable *mutatis mutandis* so far as they may reasonably be applied.

Power to modify obstructions to the passage of water through or over land.

24. (*1*) The Local Government may, by notification, declare that in any area specified in the notification every person shall be bound, for irrigation purposes or for the drainage of land which has been irrigated, to afford a free passage to water through or over any land in his possession or under his control.

(*2*) After the issue of a notification under sub-section (*1*) the Collector, if in his opinion the free passage of water through or over any land in such area is necessary for irrigation purposes or for the drainage of land that has been irrigated, may, subject to rules made under this Act, from time to time issue a general or special order upon persons who have such land in their possession or under their control to modify, in such manner and within such period as may be specified in the order, any obstruction that exists on such land to such free passage, or to show cause against such order.

(*3*) If the Collector is not satisfied with any cause that may have been shown, he may pass such order regarding costs of the hearing as he thinks fit, and shall fix a further period within which the obstruction shall be modified.

(*4*) If any person fails to comply with an order under sub-section (*2*) or sub-section (*3*), or under section 29, in respect of such modification he shall be liable for each such offence to a fine not exceeding two hundred rupees and to a further fine not exceeding twenty rupees for each day after conviction during which the obstruction remains unmodified, and the Collector may cause the obstruction to be modified and may recover the cost of modification from such person.

(*5*) No suit shall lie in any Civil Court in respect of anything done under this section.

Notification of dead or decayed rivers.

25. (*1*) The Local Government may from time to time publish by notification a list of rivers or depressions which it intends to declare to be dead or decayed rivers.

(*2*) In any list published under sub-section (*1*) any river or depression may be described either by name or by reference to its geographical situation.

(*3*) After the expiry of a period of objection to be mentioned in a notification under sub-section (*1*), the Local Government shall consider the objections and suggestions, if any, received by it and thereafter may, by notification, declare any river or depression notified under that sub-section to be a dead or decayed river, and such declaration shall be final and shall not be questioned in any Court or in any other manner whatsoever.

Limitation of claims for compensation.

26. No person shall have any claim as of right to any compensation under this or any other Act for any injury, damage or loss—

(*a*) sustained by him by reason of action taken under section 23, or

(*b*) caused by a dead or decayed river which has been revived as a result of an improvement work, or by any other river into which it flows or spills unless the injury, damage or loss is such as would have rendered the Local Government liable to pay compensation had the river not been revived :

Provided that the prescribed authority may, subject to rules made under this Act, grant compensation for any such injury, damage or loss.

Explanation.—A dead or decayed river is said to be revived when an increased volume of water is, by any means whatsoever, caused to flow freely into or along any part of such dead or decayed river.

Claims for compensation.

27. (*1*) Subject to the provisions of section 26, whenever—

(*a*) any damage is caused as a result of the prohibition, removal or modification of an obstruction under section 23 or section 24, or

(*b*) any land or right of property is injuriously affected by any improvement work for which an improvement levy is imposed under this Act,

the person by whom any damage or loss is sustained may, not later than six months after the first occurrence of the injury in respect of which the claim is preferred, prefer to the Collector a claim for compensation.

(*2*) No suit shall lie in any Civil Court for compensation in respect of any such damage, loss or injury.

Procedure for determining compensation.

28. (*1*) When a claim is preferred under section 27, the Collector shall, in the prescribed manner, determine the amount of compensation, if any, which shall be granted and the person to whom the same shall be payable. [*Cf.* Ben. Act VI of 1920, s. 25.]

(*2*) In determining whether any and, if so, what amount of compensation should be granted, the Collector shall be bound by any provisions, for the guidance or direction of authorities determining compensation, contained in or made under any Act under which the improvement work in question has been carried out, so far as the said provisions are not inconsistent with those of this Act.

Appeal from certain decisions and orders of Collector.

29. Any person aggrieved by a decision or order of the Collector under sub-section (*3*) of section 18, section 24 or section 28 may appeal to the prescribed appellate authority within thirty days from the date of such decision and the order of such appellate authority on any such appeal shall be final, and shall not be questioned in any court or in any other manner whatsoever.

The Bengal Development Bill, 1935.

(Clauses 30—33.)

Restrictions on enhancing rent of agricultural lands in benefited area.

30. Notwithstanding anything contained in the Bengal Tenancy Act, 1885, when an improvement levy has been imposed in respect of any agricultural land— VIII of 1885.

(*a*) the rent payable for such land at the time of the imposition of the levy shall not be enhanced on account of—

(*i*) benefits derived from the construction of any improvement work, or

(*ii*) an increase in the productive powers of the land due to fluvial action ;

(*b*) if no rent is payable by a *raiyat* or by an under-*raiyat*, as the case may be, for such land at the time of the imposition of the levy and a rent is fixed after that time, the rate of rent shall not exceed the average rate of money rent paid by occupancy *raiyats* or by under-*raiyats*, as the case may be, for lands of similar description and similar advantages in the vicinity ;

(*c*) if land on which rent is payable at the time of the imposition of the levy is resettled after that time, the rate of rent payable for the land after re-settlement shall not, subject to the provisions of section 30 of the Bengal Tenancy Act, 1885, exceed the rate of rent payable before re-settlement.

Publication of certain notifications.

31. The Local Government shall cause every notification under section 3, sub-section (*2*) of section 6, sub-section (*1*) of section 7, section 22 or sub-section (*1*) of section 25 to be published in such manner and at such places as it thinks fit.

Indemnity.

32. No suit or other legal proceeding shall lie against any person for anything which is in good faith done or intended to be done under this Act.

Rules.

33. (*1*) The Local Government may, subject to the condition of previous publication, make rules in respect of all or any benefited areas or part thereof for carrying out the purposes of this Act.

(*2*) In particular and without prejudice to the generality of the foregoing power, the Local Government may make rules to provide for all or any of the following matters, namely :—

(*a*) the manner in which the average increase in the outturn of agricultural produce and in profits from agricultural land shall be estimated under section 6 ;

(*b*) declaring what persons or classes of persons shall, for the purposes of sub-section (*1*) of section 8, be deemed to be occupiers of land and determining liability to payment of the improvement levy ;

(*c*) the manner in which the increased profits and the net value of the estimated increase in outturn shall, as regards agricultural lands, be estimated under sub-section (*2*) of section 8 ;

(*d*) the exercise by the Collector of powers under section 9, in relation to the imposition of the improvement levy on land not used for agricultural purposes ;

The Bengal Development Bill, 1935.

(Clause 33.)

(*e*) the form and manner of preparation and publication of the statement under section 10 and the manner of revision of such statement ;

(*f*) the appointment of, and the procedure to be followed by the appellate authorities mentioned in sub-section (*1*) of section 11 and in section 29 ;

(*g*) the manner of, and the amount of fees payable for, supplying copies under section 14 ;

(*h*) the granting of abatement or remission of the improvement levy under section 15 ;

(*i*) the manner of recovery of the improvement levy and interest under sub-section (*1*) of section 16 ;

(*j*) the rate of interest payable under sub-section (*2*) of section 16 on arrears of the improvement levy and the time after which such interest becomes payable ;

(*k*) the manner of recovery of the improvement levy by an agency employed under sub-section (*3*) of section 16 and the rate of payment of charges of collection by such agency ;

(*l*) the procedure and conduct of officers and persons authorised under sub-section (*1*) of section 18 ;

(*m*) the restrictions subject to which compensation may be offered under sub-section (*3*) of section 18 ;

(*n*) the manner of assessment of damage by the Collector under sub-section (*3*) of section 18 ;

(*o*) the exercise of powers under sub-section (*1*) of section 19 to enforce attendance of witnesses and production of documents ;

(*p*) the period within which persons shall have a right to a supply of water under section 21 ;

(*q*) the issue of orders under sub-section (*2*) of section 24 for the modification of obstructions to the free passage of water through or over land ;

(*r*) the grant of compensation to persons who have no claim as of right to any compensation under section 26 ; and

(*s*) the procedure for determination of the amount of compensation under section 28.

STATEMENT OF OBJECTS AND REASONS.

The Committee constituted in November, 1929, in accordance with the recommendation contained in paragraph 292 of the report of the Royal Commission on Agriculture in India discussed not only questions of river-conservation, for which provision has since been made in the Bengal Waterways Act, 1934, but also the work undertaken by the Irrigation Department in respect of irrigation, the resuscitation of rivers, the control of floods and the drainage of water-logged areas. They were unable to recommend any definite scheme for dealing with these problems but their report lays great emphasis on their complexity and their urgency. In Western Bengal, in their opinion, the main problem to be solved if fertility is to be restored and disaster avoided is that presented by the protective embankments which have caused the level of the bed of at least one river to rise so greatly that sooner or later a calamity is bound to occur. In Central Bengal they consider the most important problem to be the restoration of the flow of water in the rivers which after building up the delta of Bengal now lie stagnant; they refer to this tract as decadent and highly malarious with a steadily decreasing population and with land going out of cultivation and they even debate whether deterioration has already progressed so far that the tract is bound to revert gradually into swamp and jungle. In addition they draw attention to the urgent need for drainage in various parts of the province and to the demand for irrigation both in Western and in Northern Bengal to safeguard crops against the risks of a comparatively short monsoon and a small and badly distributed rainfall. They characterise as false the belief that the improvement of the decadent tracts can be other than a difficult and lengthy operation and they comment strongly on the fact that the rivers of Bengal, in spite of their great importance and their influence on the health and prosperity of the people, have in the past been singularly neglected. The reason for this they find to be the difficulty of finance. In Northern India, they point out, Governments are always ready to finance projects for the improvement of drainage and agriculture because, even though yielding no direct return from water-rates, they lead to an increase in the land revenue and therefore constitute a remunerative investment; in Bengal on the other hand the Government secures no increase of land revenue from improvements financed by it and often fails to recover for the tax-payer even the cost of the work and its maintenance. The proposals embodied in this Bill are designed primarily to avoid this financial difficulty which prevents Government from taking up works undoubtedly necessary for the prosperity of the province and to enable complex and far-reaching schemes of improvement to be undertaken with the knowledge that so far from being a burden on the provincial revenues they will prove remunerative. They are a development of a suggestion in the Committee's report that the cost of schemes financed by the Government out of loan-funds should be met by means of a cess levied at a flat rate on the total area benefited, and they have been so framed as to satisfy the recommendation of the Committee that any provisions for apportionment and realisation should be made as elastic as possible so that the procedure should be adapted to the requirements of each case. The main principle on which the proposals are based is that the Government should be entitled to recover a portion of the increased profits which accrue to private individuals and companies from land of any description, whether used for agriculture or not, owing to works undertaken at the cost of the State and which they would otherwise not have enjoyed. It is contemplated that this principle should be applicable to areas where schemes for the improvement of land have only recently been carried into effect, as well as to areas where such schemes are undertaken in the future.

The works to which the Bill refers would for the most part be carried out under the Acts, such as the Bengal Irrigation Act of 1876 and the Bengal Embankment Act of 1882, but it is proposed by this Bill to give the Local Government more general powers with regard to drainage schemes than it possesses under the latter Act. The opportunity is also being taken to improve the procedure for dealing with obstructions to water channels which constitute one of the great difficulties in dealing with drainage and irrigation in Bengal.

K. NAZIMUDDIN,

The 5th January, 1935. *Member-in-charge.*

Notes on Clauses.

Clause 3 embodies the principle on which the concept of the improvement levy is based : where profit results from improvement works constructed by Government, Government is entitled to a share of that profit. The clause requires previous intimation to be given by the Local Government of its intention to impose an improvement levy.

Clause 4 provides for the publication of the notification under clause 3 in sufficient detail to place the public in a position to criticise the scheme.

Clause 5 provides for two further notifications after action has been initiated under clause 3. By the former the Local Government shall declare its final intention after considering any objections and suggestions received after the publication of the notification under clause 3. At a later date the Local Government may declare the area to be a benefited area and impose the levy from a specified date. Several years may elapse between the two notifications under this clause, as the second would not issue until the improvement work has been constructed.

Sub-clause (*1*) of this clause ensures that the decision of the Local Government made after objections and suggestions have been considered shall be final, a necessary condition precedent to embarking upon big schemes of improvement. Sub-clause (*2*) removes the possibility of any argument to the effect that the improvement work does not benefit the area. The eventuality of a scheme not fulfilling its promise is covered by sub-clause (*3*) and clause 15. Sub-clause (*3*) gives the Local Government power to revise the boundaries of a benefited area if it is found that the benefits are actually limited or extended. Uneven incidence of benefit within a benefited area would be dealt with by having different estimates for different classes of land under clause 6(*1*) or by granting remission or abatement under clause 15.

Clauses 6 and 7 set out the methods and procedure to be adopted in estimating and valuing the increase in the outturn from agricultural lands within a benefited area.

Clause 8 sets a maximum limit to the levy to be imposed on agricultural lands. Subject to this limit, the amount of the levy can be revised from time to time, though it is not contemplated that normally revision would be frequent. The clause further lays down that the levy shall be payable by the occupiers of the lands. A bar is imposed by sub-clause (*5*) upon contracts which seek to defeat the proper incidence of the levy.

Clause 9 imposes a similar maximum in the case of non-agricultural land, and sets out the procedure to be adopted in estimating the profit due to the improvement work. The Collector may also determine whether a piece of land is to be deemed "non-agricultural" and what persons shall be deemed to be in receipt of the profits. Provision is also made for optional commutation of liability to pay the levy.

Clause 10 provides for the publication and revision (consequent upon transfer of interest, for example) of a demand list.

Clause 11 provides for appeals to the prescribed authority against certain orders passed under clause 9 (*2*) or against the demand list published under clause 10.

Clause 12 bars any objection being taken to the imposition of a levy or (except in the manner provided in this Bill) to the liability of any person to pay the same.

Clause 13 permits the Collector to continue the final preparation of the statement under clause 10, modifying, if necessary, such items as have been appealed against in accordance with the appellate authority's order.

Clause 14 makes copies of the statements prepared under clause 10 or 13 available to persons concerned on payment of the prescribed fee.

Clause 15 has already been referred to in these notes (*vide* notes on clause 5). It confers wide powers of alleviation when, through no fault of the persons liable, an improvement work does not in whole or in part, in any particular area or in any particular year, provide the benefits anticipated.

Clauses 16 and 17 prescribe the machinery for realising the levy together with arrears and costs, if any. Clause 16 allows for the employment upon prescribed terms of agencies other than the Collector (landlords, for example, who are willing to act in this capacity).

Clause 18 provides necessary powers of entry and of removal of crops, provision being made for payment of compensation in the latter case.

Clause 19 provides for the production of necessary evidence.

Clause 20 departs from the provisions of the Bengal Irrigation Act, 1876, inasmuch as water may be supplied without being applied for and the levy shall be payable whether application has been made or not.

Clause 21 is a necessary provision as it may not be possible for a canal to supply water to everyone during the winter months.

Clause 22 provides certain powers to carry out drainage works.

Clause 23 is wider than section 40 of the Bengal Irrigation Act, 1876, inasmuch as it provides for the removal of obstructions from waters which are not drainage channels.

Clause 24 authorises Government to require persons in specified areas to afford free passage of water over their land for the purposes of irrigation or of draining irrigated land. The clause also sets out the procedure to enforce, if necessary, compliance.

Clause 25 empowers the Local Government, after considering objections, to declare certain rivers or depressions to be dead or decayed rivers as defined in clause 2(*3*) and provides that such declaration shall be final.

Clause 26 provides for rules to be made in respect of the grant of compensation for damage or loss resulting from action under clause 23 or from works reviving a dead or decayed river. At the same time, no person shall be entitled as of right to such compensation except in certain cases.

Clauses 27 and 28 set out the procedure to be adopted in presenting and determining claims for compensation.

Clause 29 provides for appeals against compensation awards and lays down that the prescribed appellate authority's decision shall be final.

Clause 30 is designed to prevent persons who have not contributed to the cost of the improvement work appropriating a portion of the profits (in the form of increased rent).

Clause 31 deals with the publication of notifications under this Bill.

Clause 32 is the customary indemnity provision.

Clause 33 groups together the rule-making powers.

A. DEC. WILLIAMS,

Secy. to the Govt. of Bengal.

Registered No. C207

No. 7 of 1935

The Calcutta Gazette

THURSDAY, FEBRUARY 14, 1935.

CONTENTS:

	Page.
Third and Final Report on the Winter Rice Crop of Bengal, 1934-35	253—255
Final Report on the Cotton Crops of Bengal, 1934-35	256—257
Statements of weekly gauge readings on certain rivers in Bengal	258—259
Statement under the Cotton Ginning and Pressing Factories Act, 1925 ..	260
Weather and Crop Report for the week ending 6th February 1935	261—264
Prices-current (wholesale and retail) of food-grains, salt, etc., in the districts of Bengal for the second half of January 1935	265—268
Corporation of Calcutta Notices ..	269—276
Vital Statistics of towns of Bengal for the week ending 2nd February 1935 ..	277

SUPPLEMENT.

Official Papers.

DEPARTMENT OF AGRICULTURE, BENGAL.

Dacca, the 5th February 1935.

Third and Final Report on the Winter Rice Crop of Bengal, 1934-35.

(*Note.*—On an average of the five years' ending 1932-33, the area under winter rice in Bengal has represented some 17·9 per cent. of the total area under rice in British India.)

Character of the season.—After the issue of the second forecast in December last harvesting operations were carried on under favourable conditions and a satisfactory outturn was reaped for the province, as a whole.

Acreage.—According to District Officers' estimates the total area under winter rice is 14,760,000 acres as compared with 15,498,700 acres last year.

Outturn.—From the summary of the district returns appended it will be seen that one district reports a bumper crop, three districts report a normal crop, fifteen districts a crop varying from 74 to 92 per cent. and the rest below 74 per cent. of the normal. According to the above estimates the provincial outturn works out to 85 per cent. of the normal as against 81 per cent. last year.

Accepting 85 per cent. as the provincial outturn, the gross yield of the crop, on the basis of a normal yield of 13½ maunds of clean grain per acre, is estimated at 6,221,800 tons this year as against 6,225,700 tons last year.

K. McLean,

Director of Agriculture, Bengal (offg.).

APPENDIX I.

Third and Final Report on the Winter Rice Crop of Bengal, 1934-35.

District.	Estimated normal area under winter rice.	Estimated area under winter rice.		Estimated outturn as a percentage of the normal yield per unit of area.		Date by which the harvesting of winter rice generally commenced this year and whether that date was early, normal or late.	Remarks by District Officers.
		Last year.	This year.	Last year.	This year.		
	Acres.	Acres.	Acres.				
24-Parganas.	840,600	752,400	731,500	83	92	December. Normal ..	The weather was favourable.
Nadia ..	136,800	124,300	125,000	67	50	Middle of November. Normal.	Owing to damage by flood and untimely rainfall the outturn fell much below the normal.
Murshidabad.	416,200	372,200	186,500	83	50	Beginning of December. Normal.	The low outturn was due to damage caused by drought and by flood in parts of Sadar and Jangipur Subdivisions.
Jessore ..	434,000	388,300	400,000	00	67	November and December. Normal.	The outturn fell much below the normal due to insufficient rain and sudden flood in some parts of the district.
Khulna ..	905,300	745,000	763,000	83	92	November. Normal ..	The weather was favourable.
Burdwan	657,100	598,100	400,000	84	67	Beginning of December. Normal.	The outturn fell much below the normal due to damage caused by drought.
Birbhum	643,600	642,500	339,100	108	67	December. Normal ..	Ditto.
Bankura	440,000	441,400	384,200	100	50	First week of December. Normal.	The outturn fell much below the normal owing to damage caused by drought and insect-pests.
Midnapore	1,587,100	1,324,800	1,437,000	70	75	Between November and December.	Some damage was done to the crop owing to drought in the Jhargram, Ghatal and part of the Sadar subdivisions. Hence the outturn fell below the normal.
Hooghly	411,800	197,200	168,000	83	67	Second week of December.	The outturn fell much below the normal owing to damage caused by drought.
Howrah	92,000	102,000	94,500	83	67	Middle of December. Normal.	The weather was fair.
Rajshahi	822,700	728,000	654,600	100	75	November. Normal ..	The outturn fell below the normal due to damage done by drought and subsequent flood.
Dinajpur	1,035,200	792,100	795,300	80	90	First week of December. Normal.	The weather was favourable.
Jalpaiguri	407,400	385,000	401,000	83	100	Second week of December. Normal.	Ditto.
Darjeeling	60,000	60,000	58,000	83	83	November and December. Normal.	The weather was fairly favourable.
Rangpur	692,000	670,000	651,000	110	100	End of November. Normal.	The weather was favourable.
Bogra ..	337,000	370,000	370,000	90	90	November and December. Normal.	The weather was favourable on the whole.
Pabna ..	505,300	400,000	481,500	83	87	Third week of November. Normal.	The weather was fairly favourable.
Malda ..	304,000	218,000	120,000	83	83	Middle of November. Normal.	The outturn fell below the normal owing to damage caused by flood.
Dacca ..	672,400	641,700	638,100	70	74	Beginning of November. Normal.	Ditto.
Mymensingh.	1,457,300	1,407,100	1,407,100	75	75	November. Normal ..	The weather was fair.
Faridpur	868,500	722,100	748,500	75	92	Middle of November. Normal.	Heavy rainfall in early November adversely affected the outturn.
Bakarganj	1,300,000	1,400,000	1,410,000	67	125	November. Normal ..	A bumper crop was harvested.
Chittagong	429,000	446,000	441,000	100	80	November and December. Normal.	The weather was fairly favourable.
Tippera ..	803,800	834,500	820,800	75	75	Middle of December. Normal.	The low outturn was due to damage caused by flood and insects in parts of Brahmanbaria and Chandpur subdivisions.
Noakhali ..	705,000	692,000	690,000	60	100	November. Normal ..	The weather was favourable.
Chittagong Hill Tracts.	44,300	44,300	44,300	58	83	Third week of November. Normal.	The outturn fell below the normal due to some damage done by flood in one valley of the district.
Total Bengal.	17,018,500	15,498,700	14,760,000	81	85		

APPENDIX II.

Abstract statement of the estimated acreage and outturn of the Winter Rice Crop of Bengal, 1934-35.

Province.	Area (in acres).							Yield (in tons).						
	Of current year's crop.	Of previous year's crop.	Average of preceding—		Percentage by which column 2 exceeds (+), or is less than (−), area in—			Estimated yield of current year, i.e., of area in column 2.	Yield of previous year, i.e., of area in column 3.	Average of preceding—		Percentage by which column 7 exceeds (+), or is less than (−), yield in—		
					Column 3.	Column 4.						Column 8.	Column 9.	
1	2	3	4		5	6		7	8	9		10	11	
			Five years.	*Ten years.*		*Five years.*	*Ten years.*			*Five years.*	*Ten years.*		*Five years.*	*Ten years.*
Bengal..	14,760,000	15,498,700	15,286,600	15,015,500	−4·8	−3·4	−1·7	6,221,800	6,225,700	6,981,800	6,387,200	−0·06	−10·9	−2·6

APPENDIX III.

Statement showing the normal and actual rainfall (in inches) in each district in November and December 1934.

District.	November.		December.	
	Normal.	Actual.	Normal.	Actual.
	Inches.	Inches.	Inches.	Inches.
24-Parganas	0·82	0·74	0·21	0·43
Nadia	0·70	1·38	0·13	0·45
Murshidabad	0·59	0·05	0·10	2·32
Jessore	0·78	2·44	0·17	0·76
Khulna	0·88	1·89	0·14	0·74
Burdwan	0·72	0·35	0·10	1·39
Birbhum	0·49	0·02	0·06	0·92
Bankura	0·66	0·19	0·08	0·44
Midnapore	1·07	0·51	0·13	0·36
Hooghly	0·61	0·86	0·21	0·86
Howrah	0·64	1·20	0·19	0·13
Rajshahi	0·50	0·03	0·07	0·50
Dinajpur	0·22	0·41	0·06	0·48
Jalpaiguri	0·47	0·22	0·20	0·35
Darjeeling	0·62	0·40	0·27	0·78
Rangpur	0·30	0·37	0·07	0·18
Bogra	0·49	0·01	0·07	0·72
Pabna	0·49	0·49	0·13	0·77
Malda	0·42	0·00	0·07	0·35
Dacca	0·78	1·73	0·18	0·90
Mymensingh	0·64	0·42	0·10	0·49
Faridpur	0·73	2·28	0·22	1·41
Bakarganj	1·34	3·49	0·29	0·53
Chittagong	2·37	3·10	0·56	0·26
Tippera	0·96	2·48	0·20	0·91
Noakhali	1·56	2·63	0·37	1·16
Chittagong Hill Tracts	1·83	4·25	0·30	0·07

DEPARTMENT OF AGRICULTURE, BENGAL.

Dacca, the 7th February 1935.

Final Report on the Cotton Crops of Bengal, 1934-35.

(*Note.*—On an average of the five years ending 1932-33, the area under the cotton crops in Bengal has represented some 0·2 per cent. of the total area under cotton in India.)

There are two crops, early and late. The "early" crop is chiefly grown in the Chittagong Hill Tracts and in the Tripura State and to a small extent in other districts. The "late" crop is grown in Bankura and Midnapore.

Character of the season.—Since the issue of the third forecast in December last, picking was generally carried on under favourable conditions and a fairly satisfactory outturn was reaped for the province.

Area sown.—The total area sown with early cotton is returned at 72,903 acres and that with late at 1,032 acres this year as against 74,760 acres and the same estimate, respectively, last year.

Outturn.—The outturn of the early crop is estimated at 23,462 bales and the late crop at 296 bales as against 23,499 and 303 bales, respectively, last year.

K. McLEAN,

Director of Agriculture, Bengal (offg.).

APPENDIX.

Final Report on the Cotton Crops of Bengal, 1934-35.

District.	Area (in acres).							Yield (in bales) of 400 lbs. each.							Date at which the harvesting of the crop was begun this year.	Remarks by District Officers.
	Of current year's crop.	Of previous year's crop.	Average of preceding—		Percentage by which column 2 exceeds (+) or is less than (−) area in—			Of current year, i.e., of area in column 2.	Of previous year, i.e., of area in column 3.	Average of preceding—		Percentage by which column 7 exceeds (+) or is less than (−) yield in—				
					Column 3.	Column 4.						Column 8.	Column 9.			
1	2	3	4		5	6		7	8	9		10	11		12	13
			5 yrs.	10 yrs.		5 yrs.	10 yrs.			5 yrs.	10 yrs.		5 yrs.	10 yrs.		
Bengal Sind.																
Bankura—																
Early ..	500	500	960	900	..	−48	−44	188	188	395	358	..	−52	−47	End of October.	(1)
Late ..	632	632	606	563	..	+4	+12	253	253	239	218	..	+6	+16	End of December.	
Midnapore—																
Early ..	400	350	313	372	+14	+28	+8	35	35	34	29	..	+3	+21	December	(2)
Late ..	400	400	620	680	..	−35	−41	48	50	90	86	−14	−52	−50	..	
Mymensingh—																
Early ..	4,200	4,200	4,180	3,954	..	..	+6	1,312	1,312	1,306	1,206	..	..	+9	Latter part of December.	(3)
Late ..	..	..	..	..	..	..	..	..	..	..	..	..	..	..	..	
Comilla.																
Chittagong Hill Tracts—																
Early ..	51,900	51,900	51,020	51,910	..	..	..	19,462	19,203	15,082	16,979	+1	+29	+15	Middle of October.	(4)
Late ..	..	..	..	..	..	..	..	..	..	..	..	..	..	..	..	
Tripura State—																
Early ..	15,903	17,810	18,387	18,052	−11	−14	−12	2,465	2,761	2,515	2,606	−11	−2	−5	End of October.	(5)
Late ..	..	..	..	..	..	..	..	..	..	..	..	..	..	..	..	
Total—																
Early ..	72,903	74,760	75,760	75,188	−2	−4	−3	23,462	23,499	19,332	21,178	..	+21	+11	..	
Late ..	1,032	1,032	1,226	1,243	..	−16	−17	296	303	329	304	−2	−10	−3	..	
Total for other Bengal districts which started cultivation since 1918—																
Early ..	..	..	..	..	..	..	..	..	..	..	..	..	..	..	..	(6)
Late ..	..	..	..	..	..	..	..	..	..	..	..	..	..	..	..	
Grand Total—																
Early ..	72,903	74,760	75,760	75,188	−2	−4	−3	23,462	23,499	19,332	21,178	..	+21	+11	..	
Late ..	1,032	1,032	1,226	1,243	..	−16	−17	296	303	329	304	−2	−10	−3	..	

(1) The weather and the condition of the crops were fairly favourable. The date of harvesting was normal.
(2) The weather was fairly favourable for the growth of the crops. The date of harvesting was normal.
(3) The weather and the general condition of the crop were fair. The date of harvesting was normal.
(4) The weather and the general condition of the crop were fair. The date of harvesting was normal.
(5) The condition was, on the whole, fair. The date of harvesting was normal.
(6) The crop was not sown this year.

Statement of weekly gauge readings on the river Ganges at Rampur Boalia for the week ending the 2nd February 1935.

Date.	Hour.	Height of surface above P. W. D. datum.	Height of surface above P. W. D. datum on the same date last year.	Remarks.
1935.				Zero of gauge referred to B. M. on Rajshahi College step ; value 64·73.
27th January	7 a.m.	38·79	38·23	
28th „	7 „	38·79	38·28	
29th „	7 „	38·79	38·28	Value of 0 of the gauge= 36·84 P. W. D.
30th „	7 „	38·74	38·28	
31st „	7 „	38·53	38·33	
1st February	7 „	38·53	38·23	Value of 0 of the gauge= 35·23 P. W. D.
2nd „	7 „	38·53	38·23	

Highest recorded level on 26-8-1879=64·24.
Lowest recorded level on 24-4-1931=32·05.

J. MACKIE, *Subdivisional Officer,*
Irrigation Department, Rajshahi.

Rampur Boalia, the 4th February 1935.

Statement showing the gauge readings at Dacca Waterworks Station on the river Buriganga for the week ending 2nd February 1935.

Date.	At highest water.		At lowest water.		Commencement of—		Remarks.	
	Time.	Reading.	Time.	Reading.	Ebb tide.	Flow tide.	7 a.m.	5 p.m.
1935.								
27th January ..	17-40	4·8	11-40	3·2	17-47	11-50	3·6	4·7
28th „ ..	..	..	12-25	3·0	..	12-33	3·85	3·7
29th „ ..	7-20	4·3	13-15	2·7	7-28	13-22	4·2	3·6
30th „ ..	8-10	4·2	14-0	2·6	8-17	14-10	4·0	3·3
31st „ ..	8-55	4·2	14-50	2·6	9-6	15-0	3·9	3·1
1st February ..	9-45	4·3	15-40	2·7	9-53	15-45	3·8	3·0
2nd „ ..	10-35	4·5	16-30	2·9	10-45	16-40	3·85	3·0

B. M. on settling tank 39·49 O. M. S. L. Zero is at O. M. S. L.

Notable high and low water-levels of previous years.

	Taken at high tide.			Taken at low tide.	
27th August	1906 ..	70·5	23rd February	1907 ..	51·06
5th September	1909 ..	66·86	13th „	1908 ..	51·06
10th August	1910 ..	69·86	12th March	1912 ..	51·06
1st „	1911 ..	68·46	6th „	1914 ..	50·60
13th „	1912 ..	67·16	22nd February	1915 ..	50·30
31st „	1915 ..	69·7	15th „	1916 ..	50·60
8th „	1916 ..	68·1	3rd March	1917 ..	51·0
12th „	1917 ..	67·1	21st February	1918 ..	51·40
13th „	1918 ..	69·12	26th „	1919 ..	50·4
2nd „	1919 ..	66·8	18th „	1920 ..	50·9
8th September	1920 ..	66·9	19th „	1921 ..	50·9
28th July	1921 ..	68·4	8th March	1922 ..	51·05
10th August	1922 ..	68·00	14th „	1923 ..	50·8
31st July	1923 ..	66·15	16th February	1924 ..	50·50
29th August	1924 ..	68·82	5th March	1925 ..	50·9
8th September	1925 ..	68·52	9th February	1926 ..	2·2
15th August	1926 ..	19·6	27th „	1927 ..	2·10
17th September	1927 ..	18·70	16th „	1928 ..	2·2
22nd August	1928 ..	20·0	21st „	1929 ..	2·0
13th July	1929 ..	17·8	24th „	1930 ..	2·3
12th September	1930 ..	18·65	28th „	1931 ..	2·2
16th August	1931 ..	21·7	18th „	1932 ..	1·8
6th September	1932 ..	18·5	6th „	1933 ..	2·10
7th „	1933 ..	17·80	26th March	1934 ..	2·40
23rd August	1934 ..	19·35			

N.B.—Zero of the gauge at Dacca Waterworks prior to 11 a.m. on the 8th January 1926= —48·51 with reference to P. W. D. datum.

Zero of the gauge at Dacca Waterworks since 11 a.m. of the 8th January 1926=0·00 with reference to P. W. D. datum.

[ILLEGIBLE], *Executive Engineer,*
Khulna Division.

Khulna, the 6th February 1935.

FORM C—BENGAL.

STATEMENT OF COTTON PRESSED IN THE BENGAL PRESIDENCY FOR THE WEEK ENDING THE 1st FEBRUARY 1935.

[Section 5(2) of the Cotton Ginning and Pressing Factories Act, 1925.]

Name of Division or block.	Number of bales pressed.				Districts included in the block.
	During the week.	During the corresponding week last year.	Since 1st September 1934 (the date prescribed by the Local Government as the commencement of the season).	During the corresponding period last year.	
The Bengal Presidency	659 or 654·34 bales of 400 lbs. each.	680	4,223	5,669	All districts in the Presidency.

J. B. McBRIDE,

Chief Inspector of Factories, Bengal.

DISTRICT REPORTS ON WEATHER AND CROPS.

For the week ending on the 6th February 1935.

Summary.—During the week light and scattered showers fell over the greater part of the Presidency. Preparation of lands for autumn crops is progressing favourably in places. Threshing of winter paddy is nearly finished. Prospects of standing crops are generally satisfactory. During the week ending Saturday, the 2nd February 1935, 5,881 persons attended different relief centres and 832 persons received gratuitous relief in the distressed areas of Murshidabad. In Birbhum and Bankura, 6,051 and 820 persons, respectively, were employed on test relief works on Saturday, the 2nd February 1935. The average price of common rice for the province has risen by about 1·59 per cent. as compared with that of the previous week.

Serial No.	District and sub-division.	Rainfall.	Price of common rice, in seers, per rupee.		Character of the weather, condition of crops, etc.
			This week.	Previous week.	
1	2	3	4	5	6
		Inches.			
1	24-Parganas ..	0·17	10½	10 11/16	Weather seasonable. No damage to crops is reported. Fodder and water are sufficient. Export and import normal. Cattle-disease is reported from Habra police-station.
	Diamond Harbour	1·26	14	14½	
	Barrackpore ..	0·75	10	10½	
	Baraset ..	0·35	10	10	
	Basirhat ..	0·66	11	11	
2	Nadia ..	0·37	10	11½	Weather seasonable. No large export or import. Harvesting of sugarcane continues. Fodder and water are sufficient. Cattle-disease exists in Sadar subdivision.
	Kushtia ..	0·24	11½	11½	
	Meherpur ..	0·17	11	11	
	Chuadanga ..	0·09	11	11	
	Ranaghat ..	0·21	9½	10	
3	Murshidabad ..	0·12	10½	10	Weather cold and cloudy. Prospects of standing crops are not favourable in Kandi subdivision. Fodder is not sufficient in parts of Sadar subdivision. No large export or import. Cattle-disease is reported from Jangipur subdivision. Test relief works continue. 5,156 men, 568 women and 157 children attended relief centres during the week ending Saturday, the 2nd February 1935. Number of persons receiving gratuitous relief in the distressed areas was 188, 385 and 259 in Lalbagh, Kandi and Jangipur subdivisions, respectively.
	Lalbagh ..	Nil	11	11	
	Jangipur ..	0·02	11½	12½	
	Kandi ..	0·19	11½	12	
4	Jessore ..	0·17	11	11	Weather seasonable. Prospects of standing crops are fair. No large export or import. Fodder and water are sufficient.
	Jhenidah ..	0·07	13	13	
	Magura ..	0·04	12	11½	
	Narail ..	1·02	13	13	
	Bongaon ..	0·24	10	10	
5	Khulna ..	Nil	12	12	Weather seasonable. Its effects on crops are fair. Fodder and water are sufficient.
	Satkhira ..	0·60	12½	13	
	Bagerhat ..	Nil	12	12½	

Serial No.	District and sub-division.	Rainfall.	Price of common rice, in seers, per rupee.		Character of the weather, condition of crops, etc.
			This week.	Previous week.	
1	2	3	4	5	6
		Inches.			
6	Burdwan ..	0·58	10½	11	Weather seasonable. Condition of crop is not satisfactory. Fodder and water are sufficient.
	Asansol ..	0·21	10	10½	
	Katwa ..	0·42	11	11	
	Kalna ..	0·40	9½	10	
7	Birbhum ..	0·34	12½	12½	Weather seasonable and cloudy. Prospects of standing crops are fair. Fodder and water are sufficient. Cattle-disease is reported from Bolpur thana. 6,051 men were employed on test relief works on Saturday, the 2nd February 1935.
	Rampurhat ..	0·20	11	11	
8	Bankura ..	0·88	11	11½	Weather seasonable. Threshing of winter paddy is completed. Stock of rice, fodder and water are sufficient. No large export or import. Prospects of standing crops are fair. Cattle-disease is reported from Onda police-station. 820 persons were employed on test relief works on Saturday, the 2nd February 1935.
	Vishnupur ..	0·94	11½	11½	
9	Midnapore ..	1·67	12½	12	Weather seasonable. Prospects of standing crops are fair. Fodder and water are sufficient.
	Contai ..	1·01	13	14	
	Tamluk ..	1·42	11½	11½	
	Ghatal ..	1·01	11½	12½	
	Jhargram ..	0·95	11	11	
10	Hooghly ..	0·64	10	10	Weather seasonable. Fodder and water are sufficient.
	Serampore ..	0·54	10	10	
	Arambagh ..	0·70	11½	13	
11	Howrah ..	0·52	10	10	Weather seasonable; its effects are favourable. Fodder and water are sufficient.
	Uluberia ..	2·16	11½	11½	
12	Rajshahi (Rampur Boalia).	Nil	10½	12	Weather seasonable and favourable to the crops. Lands are being prepared for jute and paddy cultivation. Fodder and water are sufficient.
	Naogaon ..	(*n*)	(*n*)	(*n*)	
	Nator ..	0·04	11½	11½	
13	Dinajpur ..	Nil	12	12	Weather seasonable. Its effects on agricultural operations are favourable. Fodder and water are sufficient.
	Thakurgaon ..	Nil	15	15	
	Balurghat ..	Nil	12	12	
14	Jalpaiguri ..	0·48	12	13	Sky cloudy. Recent rainfall has done good to *rabi* crops. Fodder and water are sufficient.
	Alipur ..	0·23	12	13	

(*n*) Not reported.

Serial No.	District and sub-division.	Rainfall.	Price of common rice, in seers, per rupee.		Character of the weather, condition of crops, etc.
			This week.	Previous week.	
1	2	3	4	5	6
		Inches.			
15	Darjeeling ..	Nil	8	8	Weather cold and favourable. Condition of standing crops is good. Fodder and water are sufficient. Cattle-disease exists at places in Sadar subdivision.
	Kurseong ..	Nil	8½	10	
	Siliguri ..	Nil	13½	13	
	Kalimpong ..	Nil	7½	7½	
16	Rangpur ..	Nil	11	11	Weather cloudy. Prospects of standing crops are fair. Harvesting of *rabi* crops continues. Fodder and water are sufficient.
	Nilphamari ..	Nil	12	12	
	Kurigram ..	Nil	13	13	
	Gaibandha ..	Nil	12	12	
17	Bogra ..	Nil	14	14	The effect of weather on agricultural operation is fair. Condition of standing crops is fair. Fodder and water are sufficient.
18	Pabna ..	0·05	10½	10½	Weather cloudy. Condition of standing crops is satisfactory. Fodder and water are sufficient.
	Serajganj ..	Nil	10	10	
19	Malda ..	0·01	12	12	Weather seasonable and occasionally cloudy. Prospects of standing crops are fair. Fodder and water are available. Cattle-disease is reported from parts of English Bazar thana.
20	Cooch-Behar ..	0·35	13 4/16	13 4/16	Weather cloudy. Harvesting of winter paddy is almost finished. Gathering of mustard seeds continues. Preparation of lands for jute and autumn paddy is in progress. Prospects and condition of standing crops are fair. Fodder and water are sufficient. Cattle-disease is reported from Mathabhanga and Dinhati subdivisions.
21	Dacca ..	0·01	11	11	Rainfall at North Sadar (Kapasia) nil. Weather cloudy. Preparation of lands for jute and paddy continues. No large export or import. Prospects of crops are fair. Fodder and water are available. Cattle-disease exists in Manikganj subdivision.
	Manikganj ..	Nil	11½	11½	
	Narayanganj ..	0·01	10½	10½	
	Munshiganj ..	Nil	11½	12½	

Serial No.	District and sub-division.	Rainfall.	Price of common rice, in seers, per rupee.		Character of the weather, condition of crops, etc.
			This week.	Previous week.	
1	2	3	4	5	6
		Inches.			
22	Mymensingh ..	Nil	10½	10½	Weather seasonable. Condition of crops is good Fodder and water are available.
	Jamalpur ..	Nil	11½	12½	
	Tangail ..	Nil	10½	10½	
	Netrakona ..	Nil	12	12	
	Kishorganj ..	Nil	10½	11	
23	Faridpur ..	0·02	12½	13	Weather seasonable. Condition of standing crops is fair. Fodder and water are sufficient.
	Goalundo (Rajbari).	0·03	10	10	
	Madaripur ..	0·07	13	13	
	Gopalganj (*a*) ..	0·00	14	14	
24	Bakarganj (Barisal).	0·06	13	13	Weather seasonable. Prospects of standing crops are good. Fodder and water are sufficient.
	Pirojpur ..	0·13	11½	11½	
	Patuakhali ..	0·43	11½	(*n*)	
	Dakshin Shabazpur (Bhola).	0·30	11	11	
25	Chittagong ..	0·03	12 13*	12 13*	Weather seasonable. Prospects are fair. Fodder and water are sufficient. Pangu salt sells at 12 seers per rupee at Sadar.
	Cox's Bazar ..	(*n*)	(*n*)	13	
26	Tippera (Comilla)	0·05	13	13	Prospects of crops are fair. Cattle-disease exists in places.
	Brahmanbaria ..	Nil	11	11	
	Chandpur ..	Nil	13 1/16	13 1/16	
27	Noakhali ..	0·04	14	14	Weather cloudy. Condition of standing crops is fair. Fodder and water are sufficient.
	Feni ..	(*n*)	(*n*)	14	
28	Chittagong Hill Tracts.	Nil	17	18	Weather seasonable. Its effects on agricultural operations are favourable. Fodder and water are sufficient.
29	Tripura State ..	(*n*)	(*n*)	12½	Report not received.

(*n*) Not reported.

*(*a*) The rainfall at Haridaspur, which is very near to Gopalganj, is shown here.

* Burma rice.

J. C. BASU, for *Director of Agriculture, Bengal.*

Dacca, the 11th February 1935.

Wholesale prices-current of food grains, gur, etc., in the undermentioned marts of Bengal for the second half of January 1935.

Marts.	Paddy local (best quality).			Paddy local (common quality).			Rice local (best quality).		
	Present return.	Next preceding return.	Corresponding return of last year.	Present return.	Next preceding return.	Corresponding return of last year.	Present return.	Next preceding return.	Corresponding return of last year.
1	2	3	4	5	6	7	8	9	10
	Rs. a. p.	Rs. a. p.	Rs. a. p.	Rs. a. p.	Rs. a. p.	Rs. a. p.	Rs. a. p.	Rs. a. p.	Rs. a. p.
Calcutta	2 4 0	2 4 0	2 4 0	2 2 0	2 2 0	2 0 0	5 12 0	5 8 0	5 8 0
Burdwan	2 2 0	2 0 0	1 12 0	2 0 0	1 14 0	1 8 0	4 10 0	4 8 0	3 9 0
Midnapore	2 5 0	1 15 0	1 8 0	1 15 0	1 10 0	1 6 0	4 4 0	4 4 0	3 6 0
Chittagong	1 10 0	1 10 0	1 8 0	1 6 0	1 6 0	1 5 0	4 8 0	4 8 0	4 8 0
Dacca	2 2 0	2 4 0	2 0 0	1 14 0	2 0 0	1 13 0	4 2 0	3 12 0	3 12 0
Pabna	2 0 0	2 0 0	1 14 6	1 14 0	1 14 0	1 9 6	4 8 0	4 8 0	3 4 0
Rangpur	1 12 0	1 14 0	2 4 0	1 8 0	1 10 0	1 14 0	4 6 0	4 0 0	5 0 0
Serajganj (Pabna)	..	..	..	..	..	..	..	..	..
Sarisabari (Mymensingh)	..	..	..	..	..	..	..	..	..
Narayanganj (Dacca)	..	..	..	..	..	..	..	..	..

Marts.	Rice local (common quality).			Wheat.			Raw cotton.		
	Present return.	Next preceding return.	Corresponding return of last year.	Present return.	Next preceding return.	Corresponding return of last year.	Present return.	Next preceding return.	Corresponding return of last year.
	11	12	13	14	15	16	17	18	19
	Rs. a. p.	Rs. a. p.	Rs. a. p.	Rs. a. p.	Rs. a. p.	Rs. a. p.	Rs. a. p.	Rs. a. p.	Rs. a. p.
Calcutta	4 12 0	4 12 0	4 0 0	3 7 0	3 7 0	3 0 0	17 12 0	17 12 0	16 0 0
Burdwan	3 10 0	3 8 0	2 11 0	..	..	..	..	..	..
Midnapore	3 8 6	3 2 0	2 4 0	..	..	..	..	..	..
Chittagong	3 7 0	3 7 0	3 8 0	..	..	..	..	..	..
Dacca	3 2 0	3 2 0	3 4 0	..	..	..	..	..	..
Pabna	3 2 0	3 2 0	3 0 0	..	..	..	..	..	..
Rangpur	3 8 0	3 8 0	3 12 0	..	..	..	..	..	..
Serajganj (Pabna)	..	..	..	..	..	..	..	..	..
Sarisabari (Mymensingh)	..	..	..	..	..	..	..	..	..
Narayanganj (Dacca)	..	..	..	..	..	..	..	..	..

Marts.	Coal.			Raw jute (weighted average).			*Gur* (sugarcane).		
	Present return.	Next preceding return.	Corresponding return of last year.	Present return.	Next preceding return.	Corresponding return of last year.	Present return.	Next preceding return.	Corresponding return of last year.
	20	21	22	23	24	25	26	27	28
	Rs. a. p.	Rs. a. p.	Rs. a. p.	Rs. a. p.	Rs. a. p.	Rs. a. p.	Rs. a. p.	Rs. p. a.	Rs. a. p.
Calcutta	0 6 6	0 6 6	0 6 6	5 3 0	5 0 0	4 9 3	4 8 0	4 12 0	4 4 0
Burdwan	..	..	..	..	..	..	5 0 0	4 8 0	4 8 0
Midnapore	..	..	..	..	..	..	4 8 0	4 8 0	3 4 0
Chittagong	..	..	..	..	..	..	7 12 0	7 12 0	5 0 0
Dacca	..	..	..	..	..	..	4 12 0	5 0 0	4 14 0
Pabna	..	..	..	..	..	..	4 0 0	4 0 0	3 6 0
Rangpur	..	..	..	..	..	..	4 2 0 to 5 0 0	4 0 0 to 5 4 0	4 0 0 to 4 8 0
Serajganj (Pabna)	..	..	..	4 4 0	4 0 0	3 11 6	..	..	..
Sarisabari (Mymensingh)	..	..	..	3 13 0 to 5 13 0	3 14 0 to 5 4 0	3 8 0 to 5 0 0	..	..	..
Narayanganj (Dacca)	..	..	..	4 0 0 to 5 0 0	4 0 0 to 5 0 0	3 13 0 to 4 8 0	..	..	..

Dacca, the 7th February 1935.

J. C. Basu, for *Director of Agriculture, Bengal.*

Prices-current (retail) of common rice and salt in the districts of Bengal for the second half of January 1935.

Districts and Marts.	Quantity per rupee in seers of eighty tolas.								
	Common rice.						Salt.		
	Average.			Cheapest.					
	Present return.	Next preceding return.	Corresponding return of last year.	Present return.	Next preceding return.	Corresponding return of last year.	Present return.	Next preceding return.	Corresponding return of last year.
	S. Ch.	S. Ch.	S. Ch.	S. Ch.	S. Ch.	S. Ch.	S. Ch.	S. Ch.	S. Ch.
Presidency Division.									
24-Parganas—									
1 Chetla Hat ..	10 11	11 2	13 5	12 5	12 5	11 11	16 0	16 0	17 9
2 Mogra Hat ..	11 7	13 5	13 5	13 5	15 4	15 4	16 0	16 0	16 0
3 Calcutta-Beliaghata	8 8	8 8	9 10	11 8	12 4	11 7	16 0	16 0	13 0
Nadia—									
4 Goari	10 4	11 0	13 0	13 0	13 0	13 0	14 0†	14 0†	13 0†
5 Ranaghat ..	10 0	10 0	11 8	13 0	13 0	13 0	14 0†	14 0†	13 0†
Murshidabad—									
6 Berhampore ..	10 0	11 8	15 8	11 0	12 0	14 8	14 0*	14 0*	14 0*
7 Kandi	13 0	12 8	16 0	13 8	13 0	16 0	14 0	14 0	14 8
8 Jangipur ..	11 8	11 12	16 0	12 0	12 4	15 0	15 0	15 0	15 0
Jessore—									
9 Sadar	11 0	13 0	13 0	13 0	14 0	12 0	14 0†	15 0 14 8*	14 0* 15 0
10 Bongaon ..	10 0	10 0	11 0	12 8	12 8	13 0	14 8 13 0*	14 8 13 0*	13 8 12 8*
Khulna—									
11 Sadar	12 4	13 0	12 0	13 0	14 0	14 8	16 0 15 0*	14 0†	13 0†
12 Bagerhat ..	12 8	12 0	10 0	13 8	13 0	12 0	14 0	13 8	13 8
Burdwan Division.									
Burdwan—									
13 Sadar	10 8	11 0	11 8	11 8	12 0	10 0	14 0†	14 0†	13 8 16 0*
14 Kalna	9 0	10 8	10 8	10 0	11 0	13 0	15 0†	15 0†	16 0
Birbhum—									
15 Suri	11 0	12 0	16 0	11 8	13 0	13 0	14 0	14 0	14 0
16 Rampurhat ..	11 0	10 0	16 0	12 0	13 0	15 0	16 0	16 0	16 0
Bankura—									
17 Sadar	11 0	12 0	15 0	12 0	12 8	14 0	14 0	14 0	14 0†
18 Vishnupur ..	10 8	10 8	16 0	11 4	11 8	13 0	13 0	13 0	12 8

* Karkach.

N.B.—The prices of Karkach and Liverpool salt tally with each other in marts marked †.

Prices-current (retail) of common rice and salt in the districts of Bengal for the second half of January 1935.

Districts and Marts.	Quantity per rupee in seers of eighty tolas.								
	Common rice.						Salt.		
	Average.			Cheapest.					
	Present return.	Next preceding return.	Corresponding return of last year.	Present return.	Next preceding return.	Corresponding return of last year.	Present return.	Next preceding return.	Corresponding return of last year.
	S. Ch.	S. Ch.	S. Ch.	S. Ch.	S. Ch.	S. Ch.	S. Ch.	S. Ch.	S. Ch.
BURDWAN DIVISION—*concld.*									
Midnapore—									
19 Sadar	9 10 (b)	12 8	16 0	11 11	13 0	16 8	14 0	14 0	16 0
20 Contai	14 0	16 0	16 0	16 0	18 0	18 0	12 0	12 0	32 0
Hooghly—									
21 Sadar	10 8	11 0	13 4	12 0	13 0	16 0	15 0	15 0	16 0
22 Arambagh ..	13 0	13 0	16 0	13 8	13 8	17 0	14 0 13 12*	14 8 14 0*	15 0 14 8*
Howrah—									
23 Sadar	11 0	11 0	13 0	12 0	12 0	15 0	16 0	16 0	16 0
24 Uluberia ..	11 8	11 8	12 0	13 0	13 8	14 8	16 0	16 0	16 0
RAJSHAHI DIVISION.									
Rajshahi—									
25 Rampur-Boalia ..	12 0	12 12	12 8	12 8	13 0	16 0	13 4†	13 4†	13 8 13 0*
26 Nator	11 4	12 0	(n)	12 12	14 4	13 8	12 0†	12 0†	12 0†
27 Dinajpur—Railbazar Hat.	12 0	15 0 (a)	15 2	13 0	15 8	16 5	13 0†	13 0†	13 0†
28 Jalpaiguri—Sadar ..	12 0	12 0	12 0	14 0	14 0	14 0	13 0	13 0	13 0
Darjeeling—									
29 Sadar	9 0	9 8	9 0	10 0	11 0	11 0	10 0†	10 8 10 0*	10 0 8 0*
30 Siliguri ..	12 0	12 0	12 0	13 8	13 0	13 8	12 0†	12 0†	12 0†
Rangpur—									
31 Sadar	11 13	11 13	14 10	11 13	11 13	14 10	13 0	13 0	12 8
32 Nilphamari ..	(n)	10 0	(n)	(n)	12 0	13 0	(n)	12 8*	12 8*
33 Bogra—Sadar ..	13 6	13 6	10 8	13 14	14 4	13 14	14 2	14 2	12 0
Pabna—									
34 Sadar	9 8	10 0	13 12	11 8	13 4	14 0	14 8†	14 8†	13 12†
35 Serajganj ..	11 0	11 4	11 8	11 4	11 12	12 12	16 0 15 0*	16 0 15 0*	16 0 15 0*
Malda—									
36 Sadar	11 8	13 0	15 0	12 8	14 0	16 0	14 8 14 0*	14 8 14 0*	14 8 13 8*
37 Balia—Nawabganj	12 8	14 8	16 4	13 4	15 0	18 0	14 8 14 0*	14 8 14 0*	15 0 14 0*

*Karkach. (n) Not reported.

N. B.—The prices of Karkach and Liverpool salt tally with each other in marts marked †.

(a) (New). (b) Rise in price is due to scarcity of rainfall.

Prices-current (retail) of common rice and salt in the districts of Bengal for the second half of January 1935.

Districts and Marts.	Quantity per rupee in seers of eighty tolas.								
	Common rice.						Salt.		
	Average.			Cheapest.					
	Present return.	Next preceding return.	Corresponding return of last year.	Present return.	Next preceding return.	Corresponding return of last year.	Present return.	Next preceding return.	Corresponding return of last year.
	S. Ch.	S. Ch.	S. Ch.	S. Ch.	S. Ch.	S. Ch.	S. Ch.	S. Ch.	S. Ch.
Dacca Division.									
Dacca—									
38 Sadar	11 8	12 0	12 4	13 0	13 0	14 0	13 4†	13 8†	13 5 14 0*
39 Mirkadim ..	11 8	12 4	12 0	12 0	13 0	13 0	15 0*	16 0*	13 8*
Mymensingh—									
40 Nasirabad ..	12 0	12 0	10 12	13 4	13 4	12 0	12 8*	12 12*	12 8*
41 Netrakona ..	12 0	12 0	(n)	13 0	12 8	11 0	13 0 12 0*	13 4 11 8*	14 8 12 8*
Faridpur—									
42 Sadar ..	13 0	13 0	11 0	16 0	16 0	12 0	12 0	12 0	12 8
43 Rajbari ..	10 0	10 0	11 0	12 0	12 0	13 0	12 0	12 0	12 0
Bakarganj—									
44 Barisal ..	12 0	10 0	11 0	13 0	12 0	12 0	16 0 15 0*	15 0†	15 0 14 0*
45 Pirojpur ..	11 8	10 8	12 8	11 10	10 10	12 12	11 0†	11 0†	11 0†
Chittagong Division.									
Tippera—									
46 Comilla ..	12 5	10 0	11 7	13 5	12 5	12 5	12 13 10 10*	12 13 10 10*	12 13 10 10*
47 Chandpur ..	12 8	13 14	11 8	13 5	15 8	12 4	(n)	13 5	13 5
Noakhali—									
48 Kalitara Hat ..	10 0	10 0	11 0	11 0	13 0	13 0	13 0 9 0*	13 0 11 0*	13 0 9 0*
49 Feni Hat ..	12 12	13 12	13 0	14 0	14 0	14 0	14 0 10 0*	13 0 10 0*	14 0 10 0*
Chittagong—									
50 Sadar	11 8	11 8	10 0	13 0	13 0	13 8	12 0	13 0	16 0
51 Cox's Bazar ..	12 8	12 8	14 0	13 8	13 8	15 0	13 0	13 0	13 0
52 Chittagong Hill Tracts —Rangamati ..	14 0	14 0	14 0	17 0	15 0	18 0	13 0 8 0*	13 0 8 0*	6 8* 13 0

* Karkach. (n) Not reported.

N. B.—The prices of Karkach and Liverpool salt tally with each other in marts marked †.

Dacca, the 7th February 1935. J. C. Basu, for *Director of Agriculture, Bengal.*

CORPORATION OF CALCUTTA.

NOTICES.

Central Municipal Office, the 7th February 1935.

Notice is hereby given, under section 486 of the Calcutta Municipal Act, 1923, for the information of the public that in exercise of the powers vested in them under section 66 of the said Act, the Corporation of Calcutta have made the following rules for the conduct of business at their meetings which shall take effect in supersession of the existing rules on and from the 1st April 1935:—

Rules of Business under section 66 of the Calcutta Municipal Act for the conduct of business at the meetings of the Corporation.

Date and hour of meeting.

1. The Corporation shall ordinarily meet once every week in the afternoon of Wednesday unless otherwise specially ordered by the Corporation or unless the Mayor or in his absence the Deputy Mayor thinks that there is not sufficient business to be transacted, or unless Wednesday is a public holiday. *Vide* present rule 1.

The hour of meeting shall ordinarily be 5-15 to 7-15 p.m. unless otherwise decided by the Corporation.

Provided that if at the close of the prescribed hour or the expiry of the extended period a discussion on a motion has terminated or the closure has been moved and carried, then the meeting shall continue for the purpose of enabling the President to speak and the vote to be taken.

Quorum.

2. If at the expiration of 15 minutes after the hour at which a meeting of the Corporation is appointed to be held or if at any time during a meeting the requisite number to form a quorum be not present, the President of such meeting shall adjourn the meeting to such convenient time and place as he thinks fit; and the business which should have been brought before the meeting if a quorum had been present shall be brought forward and disposed of in the usual manner at the adjourned meeting. *Vide* present rule 1 and section 63 proviso.

Issue of notice.

3. The Secretary shall, under the direction of the Mayor, or in his absence the Deputy Mayor, send a list of business to be transacted at every meeting, to the address of each Councillor and Alderman resident in Calcutta so that it may be in his hands not less than 48 hours before the time fixed for such meeting. Based on present rule 1 and section 60.

Business which can be transacted at an ordinary meeting.

4. No business other than the business of which notice has been so given shall be transacted or brought before any meeting, provided that—

(*i*) any Councillor or Alderman may submit to a meeting any resolution going beyond the matters mentioned in the notice given of such meeting if he has given not less than 48 hours' previous notice of his intention to do so by leaving a copy of such resolution at the Municipal Office, *Vide* section 60.

(*ii*) any Councillor or Alderman may, at the commencement of a meeting, and with the leave, of the Mayor or in his absence the Deputy Mayor, previously obtained in writing, mention before a meeting any matter not in the agenda which is of urgent public importance, *New.*

(*iii*) any Councillor or Alderman may at any time move, in the manner provided for in these rules, a motion for passing on to the next item of business or for closure or for asking a Committee to review its decisions or for any other purpose provided for in these rules. *Vide* present rule 12.

5. At all ordinary meetings of the Corporation convened under section 58 (1) and rule (1), the order of business shall be as follows:— *Vide* present rule 2.

(1) Interpellations including those left over from previous meetings.

(2) Confirmation of Minutes.

(3) Elections and nominations by the Corporation.

(4) Recommendations of Standing Committees including those remaining undisposed of (if any) from previous meetings arranged as far as possible according to the dates of such recommendations.

(5) Any matter under debate.

(6) Reports of Special Committees.

(7) Other Corporation business.

(8) Notices of motion in the order in which they have been received including any pending from previous meetings.

Provided that the Corporation may immediately after (1) and (2) above have been disposed of vary the order of business on a motion from a member, but if a matter included in the agenda is already taken up, no motion to vary the order of business shall be admissible until the matter under debate is disposed of.

President of Meeting.

Section 62.

6. The Mayor or in his absence the Deputy Mayor shall preside at every meeting of the Corporation and shall have a second or casting vote in all cases of equality of votes.

In the absence of the Mayor and Deputy Mayor, the Councillors and Aldermen present at any meeting shall choose one of their number to preside, who shall in case of equality of votes have a second or casting vote.

Special Meeting.

Section 58 (2).

7. The Mayor or in his absence the Deputy Mayor may call a meeting of the Corporation whenever he thinks fit. The rules regarding notice and quorum will apply to such meetings.

Requisition Meeting.

Section 58 (2) and rule 1 (*a*).

8. The Mayor or in his absence the Deputy Mayor shall, upon a requisition signed by any 10 Councillors or Aldermen, call a meeting of the Corporation as soon as possible but not later than one month from the date of requisition. The requisition with the notice of motion and the names of the signatories shall be set out in the agenda.

Provided that—

(*a*) at such a meeting no substantive proposal shall be made or discussed which does not directly relate to the business mentioned in the requisition,

(*b*) in case the discussion on the motion is not finished on the day appointed, the President may with the consent of the majority of members present adjourn the meeting to any other convenient date.

Meetings open to public unless otherwise ordered.

Vide present rule 20.

9. All meetings of the Corporation shall be open to the public unless a majority of members present thereat decide otherwise by a resolution that a particular matter shall be discussed in private. Such a motion may be moved at any stage of the debate and shall be voted upon without debate. It shall have precedence over all other motions or amendments relating to that matter.

Mode of deciding matters.

Vide present rule 3.

10. Every matter to be determined by the meeting shall be decided after a motion made by a member and by means of a question put by the President and shall be resolved in the affirmative or in the negative according to such majority of votes as the law requires.

Section 61.

All acts authorised or required to be done by the Corporation and all questions which may come before the Corporation for decision, shall save as is provided otherwise in the Act be respectively done and decided by a majority of the Councillors and Aldermen voting at the meeting before which the matter is brought.

Vide present rule 3.

No discussion shall take place on the method of voting, nor shall any motion or discussion be allowed on the minutes of the proceedings of any meeting at the time of confirmation thereof except as to their accuracy.

Mode of Discussion.

11. (*a*) (*i*) A member desiring to speak on any matter before the House shall do so from his place, shall rise when he speaks and shall address the President. At any time, if the President rises, a member speaking shall immediately resume his seat, but may continue his speech after the President sits down. *Vide* present rule 10.

(*ii*) The President may, at any stage of the proceedings, at his own discretion, or at the request of a member, explain the scope and effect of a motion or amendment which is before the meeting. He may also at the conclusion of a debate sum up the debate if he so desires.

(*b*) (*i*) The matter of every speech must be strictly relevant to the subject under discussion at the time.

(*ii*) Any member who intends to move a motion or amendment shall read the same before speaking on it and shall hand it in duly signed. If the President considers the motion or amendment to be in order, he shall put it in the form of a question to the meeting after which it may be debated.

(*iii*) In case a member desires to ask a question of another member on any matter then under consideration, he shall ask the question through the President.

(*c*) (*i*) A member shall speak only once on any motion.

Provided that the mover of a substantive motion or an amendment may reply at the conclusion of the debate.

Provided also that with the permission of the President, a member may explain what he has said before if it has been misunderstood but in such a case no debatable matter shall be brought forward.

Provided further that a member who has spoken on a motion may with the previous permission of the House speak again on any new matter introduced by an amendment.

(*ii*) The seconder of a motion or an amendment may, if he expresses a desire to do so, be allowed to reserve his speech on the motion or amendment for a later period in the debate.

(*d*) The mover of a motion or amendment shall not speak for more than 10 minutes and other speakers for more than 5 minutes except with the permission of the House. The time limit for a reply by the mover of a motion or amendment shall not exceed 5 minutes except with the permission of the House.

The House may, by resolution, vary these time limits in connection with the debate on a particular matter.

Subject Matter of Speech.

12. A member when speaking shall not—

(*i*) comment on any matter on which a judicial decision is pending,

(*ii*) make a personal charge against members or use any offensive or defamatory expression.

Orderliness at Meetings.

13. (*a*) The President of a meeting shall preserve order to secure for the members a fair hearing. He shall decide between two or more members rising to speak by calling on the member whom he first observes to rise in his place, to speak. *Vide* present rules 11 and 13.

(*b*) The President after having called the attention of the meeting to the conduct of a Councillor or Alderman who persists in irrelevance or in undue repetition either of his own arguments or those used by other members in the same debate may direct him to discontinue the speech. *New.*

(*c*) The President may direct a Councillor or Alderman who uses an offensive expression to withdraw the same. A Councillor or Alderman who refuses to comply with the direction of the President to withdraw an offensive expression or whose conduct is in the opinion of the President grossly disorderly may be asked by the President to withdraw immediately from the meeting and any member so ordered shall do so forthwith and shall absent himself during the remainder of the meeting. *New.*

(*d*) The President may in the event of disorder arising suspend the meeting and adjourn the meeting to a time he may fix and his quitting the chair shall be the signal that the meeting is adjourned. *Vide* present rule 13.

Point of Order.

Vide present rule 14.

14. Any member may, at any time, submit a point of order to the decision of the President. The President shall decide all points of order and his decision shall be final. A member who may be speaking when a point of order is raised shall resume his seat until a decision on the point is given by the President. No discussion on a point of order shall be allowed, but it shall be open to the President to invite the opinion of the members on a point of order.

Method of Voting.

15. (*a*) Every question voted on shall be put both for and against and the voting shall be by show of hands.

Provided that the Corporation may decide that the voting on a particular matter shall be decided by ballot.

Provided also that a member may have his name recorded as voting for or against any motion.

Vide section 65 and present rule 23.

(*b*) A poll shall be taken if demanded by at least five members rising together immediately after the declaration of the result by the President. When a poll is taken, the names of all members voting for or against a motion and also the names of members who abstain from voting shall be recorded in the minutes of the proceedings.

Interpellations.

Vide present rule 3.

16. (*a*) Any member of the Corporation may ask questions of the Chief Executive Officer (who shall answer them) regarding matters connected with the municipal administration of Calcutta by sending them in writing to the Secretary four clear days before the day of a meeting.

Provided that—

(*i*) such questions appear on the agenda of the day's meeting,

New.

(*ii*) such questions contain no remarks or statements not essential for making the questions intelligible,

(*iii*) such questions do not call for an expression of opinion or are not argumentative or hypothetical in nature,

(*iv*) such questions do not relate to the character or conduct of any person except in his official or public capacity,

(*v*) such questions do not relate to any matter which is under adjudication by a Court of Law.

(*b*) All interpellations will be examined immediately after their receipt in regard to their admissibility, and the member sending in the interpellations will be informed by the Secretary if any interpellations are disallowed in writing stating the reasons by the Mayor or in his absence the Deputy Mayor. The interpellations will be printed in the agenda as soon as the answers are ready and the date of receipt of interpellations will be noted in the agenda.

New.

(*c*) Not more than the first 15 minutes of the meeting shall be devoted to supplementary questions. Any member may ask supplementary questions to elucidate facts arising out of the answers.

Provided that they do not contravene the rules above;

Provided also that the Chief Executive Officer may ask for notice for giving answers to such supplementary questions, in which case such supplementary questions may be put as questions at a subsequent meeting.

(*d*) The Mayor or in his absence the Deputy Mayor may in writing within a month stating the reasons disallow any questions which do not conform to rule (*a*) above, or on the ground that they cannot be answered in the interests of the Corporation; in such cases, they shall not appear on the agenda. When any questions are disallowed, the Secretary shall inform the member of the rule under which they have been so disallowed.

(*e*) The questions and the answers thereto shall be laid on the table of each Councillor and Alderman half an hour before the time fixed for the meeting. After declaring the meeting open, the President shall call out "questions." Thereafter, the Secretary shall call out the item number of each question in the order printed in the agenda to give opportunities to put supplementary questions to which answers may be given orally. The Secretary shall not call out the next number till ordered to do so by the President. The President shall have full power to allow or disallow any supplementary questions. All questions and the answers thereto shall be entered in the Minutes of the proceedings of the meeting.

(*f*) No member shall be allowed to put more than three questions at a meeting. The Mayor or in his absence the Deputy Mayor may split up a question into two or more questions if it deals with more than one subject matter; if the total number of questions is more than three, the member shall be asked which of the questions so framed he desires to be answered. *New*

(*g*) Answers shall be ready within one month and if for some reasons the answers cannot be given, the Chief Executive Officer shall make a statement explaining why the answers are not ready.

Motions.

17. (*a*) Every notice of a motion shall be in writing signed by the member giving the notice and shall be accompanied by the motion itself and shall ordinarily reach the Secretary at least 4 clear days before the day of the meeting for it to be included in the agenda of the meeting. *Vide* present rule 4.

Provided that any Councillor or Alderman may submit to a meeting any resolution going beyond the matters mentioned in the notice given of such meeting, if he has given not less than forty-eight hours' previous notice of his intention to do so by leaving a copy of such resolution at the Municipal Office. Section 60 proviso.

The Secretary shall, as far as possible, issue a supplementary agenda containing notice of such motions.

Provided that no previous notice is necessary for certain classes of motions as provided for in these rules.

(*b*) If a motion which appears on the agenda be not moved by the member giving the notice of such motion or by some other member present or be not seconded when it comes up for discussion in due course, it shall be considered as dropped and shall not be moved without fresh notice. A member with the permission of the House may make verbal alterations in his motion, or may, with the consent of the House, withdraw it at any stage of the debate on such a motion. *Vide* present rule 4 (*b*).

(*c*) The Mayor or in his absence the Deputy Mayor shall decide on the admissibility of a motion. No motion shall be admissible— *New.*

(*i*) which does not clearly and precisely raise a definite issue,

(*ii*) which raises a question substantially the same as may have been disposed of by the Corporation within six months, or

(*iii*) which relates to any matter which is directly under adjudication by a Court of Law.

(*d*) No motion which in the opinion of the Mayor or in his absence the Deputy Mayor does not relate to the ordinary work of the Corporation shall be considered at an ordinary meeting of the Corporation. Such motions shall be considered at meetings to be specially called for the purpose by the Mayor or in his absence the Deputy Mayor. *New.*

(*e*) The President, may, with the consent of the majority of the members present, submit for consideration as one subject, any two or more items of business relating to the same subject although these items may not have been grouped together in the agenda. The President may also divide any motion or amendment into two or more distinct propositions which in his opinion are likely to make the issues contained in them clearer or more convenient for the purposes of discussion and voting; in such a case the divided motion or amendment need not be again separately moved and seconded. *Vide* present rule 5 (*b*).

(*f*) No motion or amendment shall be moved at any meeting or if such be postponed, at an adjourned meeting, which has already been resolved in the affirmative or negative.

Vide present rule 19.

(*g*) (*i*) No motion to alter any resolution or any portion of a resolution which has been passed by the Corporation within the preceding six months shall be considered until such resolution or the portion sought to be altered has first been rescinded. No motion to rescind such resolution or a portion of it shall be considered unless (1) previous notice has been given under rule 17 (*a*) above by a member supported by nine other members and (2) a majority of the members present and voting first give permission to the member to move it.

Provided that if a Standing Committee which ordinarily deals with the subject matter of the resolution recommends such rescision or alteration of the previous resolution within the period of six months, the same shall be considered by the Corporation.

New.

Provided further that such motion or recommendation does not refer to a resolution to which effect has already been given or on which action has already been taken.

New.

(*ii*) When once such motion or recommendation has been disposed of by the Corporation it shall not be admissible to move a similar motion or make a similar recommendation within a further period of six months, except with the consent of three-fourths of the number of members present and voting.

New.

(*iii*) No resolution of the Corporation shall be kept in abeyance merely by reason of a notice of motion having been received for rescinding or altering such resolution.

(*h*) No previous notice is necessary for a motion—

(*i*) to confirm the Minutes of the Corporation,

(*ii*) to consider and adopt the Annual Report, any Report or Bill referred to the Corporation by Government or any public body, or the Report of a Committee or the recommendations of a Standing Committee,

(*iii*) to refer a matter under debate back to the appropriate Committee,

(*iv*) to pass on to the next item of business,

(*v*) to adjourn the debate (on any item) or to adjourn the meeting altogether to a subsequent time and place,

(*vi*) to close the debate on a motion by moving that "the question be now put".

These motions may be moved at any time during the meeting but not so as to interrupt a speech and not until sufficient time has elapsed after a similar motion has been rejected by the House. A motion for adjournment shall be decided upon first before either the original motion and the amendments thereon are taken into consideration.

Vide rule 12.

(*i*) (*i*) When a motion is moved "that the question be now put" or "that the House pass on to the next item of business", the President shall put the same forthwith and the motion shall be decided without amendment or debate.

Provided that such motion shall not be moved by a member who has already spoken and the member moving it does not make a speech.

(*ii*) If the motion "that the question be now put" be carried, the question on the original motion and on all its amendments shall be put and decided without amendment or further debate.

(*iii*) If the motion "that the Corporation pass on to the next item of business" be carried, the item of business under discussion shall be considered to have been dropped.

Section 62 (*3*).

(*iv*) The President of any meeting may, with the consent of a majority of the members present, adjourn the meeting from time to time and place to place.

Vide rule 7 (*b*).

(*v*) No amendments with regard to a motion for the adjournment of the debate on an item or of the meeting shall be allowed unless it relates to time and place.

Amendments.

18. (*a*) An amendment must be relevant to and within the scope of the subject matter of the clause or motion to which it relates. It shall be in writing and must be in conformity with the provisions of the Act and the rules.

(*b*) An amendment which has the effect of a negative vote shall not be moved.

(*c*) Any number of amendments may be before the meeting at the same time.

(*d*) An amendment unless seconded shall fail.

(*e*) The mover of an amendment has a right of reply and a member who had previously spoken on the original motion or its other amendments may, with the permission of the House, speak on a new amendment provided that in doing so, he confines himself strictly to the fresh matter introduced by the new amendment.

(*f*) An amendment once moved and seconded cannot be withdrawn except with the permission of the House.

(*g*) In case of more than one amendment to a motion being proposed, it shall be within the discretion of the President to put the amendments to the vote in such order as he may deem fit.

Appointment of Officers by the Corporation.

19. (*a*) In all cases of appointments to be made by the Corporation, the matter shall first be placed before the appropriate Committee. The Committee shall, if so directed by the Corporation, advertise for applications from candidates or issue notifications of such vacancies. In cases in which it is decided to advertise, the terms of advertisement shall first be approved by the Corporation. All applications and any motions by members of the Corporation regarding such appointments shall be considered by the Committee who will send up their recommendation to the Corporation. When such recommendation of the Committee is on the agenda, the only proposition which may be moved in this connection shall be to fix a day for making the appointment to which amendments may be moved to refer the matter back to the appropriate Committee, or to adjourn the consideration of the same and not to propose the name of any person for appointment at that stage. *New.*

(*b*) At the time of making such appointment on the date so fixed, no member shall be allowed to propose any name not previously considered by the Committee.

(*c*) In making appointments under section 51, if there be more than one candidate proposed the Corporation shall proceed by the system of elimination until one candidate obtains an absolute majority of the votes of the members present at the meeting and voting. *Vide* present rule 21.

Provided that the above rules (*a*), (*b*) and (*c*) shall apply only to permanent appointments.

Appointment of Committees.

20. A motion for the appointment of a Committee shall contain the number of members to constitute the Committee and set out precisely the terms of reference to such Committee. Amendments on the number of members or on the terms of reference may be moved. When the motion, amended or otherwise, is carried, the mover shall propose a list of as many members as may have been fixed to constitute the Committee. On this list being seconded any other member may either move the substitution of any one or more names for one or more contained in the list, or draw up a different list, and move that it be substituted for the list proposed by the mover of the original resolution. *Vide* present rule 24.

Provided that the mover of the motion or the amendment shall satisfy himself that the members proposed by him are willing to serve on the Committee.

Provided further that in proposing names no discussion regarding the merits of such persons shall be allowed.

Reports of Committees.

21. Upon the consideration of the report of a Committee it shall be the duty of the Chairman of the Committee or in his absence, or in the event of his disagreeing with the report of, some member of the Committee to submit to the Corporation a motion for the confirmation thereof. *Vide* present rule 25.

Central Municipal Office, the 4th February 1935.

It is hereby notified for general information that the Corporation of Calcutta under powers vested in them in this behalf have, by a resolution, dated the 23rd January 1935, prescribed the alignment of a 30 feet projected public street running north to south through premises No. 12, Monoharpuker Road between the alignment of a 40 feet projected public street running east to west and Monoharpuker Road, and abandoned the portion of the alignment of a 40 feet projected public street running north to south between the 40 feet cross alignment and Monoharpuker Road in Ward 27, which was sanctioned on the 13th July 1922 by the General Committee of the Corporation as constituted under Act III (B.C.) of 1899.

A copy of the plan prepared in this behalf showing the sanctioned alignment as well as that abandoned may be seen in the office of the Chief Valuer and Surveyor of the Corporation any day during office hours on payment of usual fees.

It is hereby notified for general information that the Corporation of Calcutta under powers vested in them in this behalf have, by a resolution, dated the 23rd January 1935, modified the alignment of the portion of Madan Pal Lane between Suburban School Road, formerly known as Chaulputty Road, and Tolly's Nullah in Ward 22 to a width of 12 feet in place of 30 feet sanctioned on the 20th October 1921 by the General Committee of the Corporation as constituted under Act III (B.C.) of 1899.

A copy of the plan prepared in this behalf may be seen in the office of the Chief Valuer and Surveyor of the Corporation any day during office hours on payment of usual fees.

Central Municipal Office, the 14th February 1935.

In compliance with the provisions of section 481 of the Calcutta Municipal Act, 1923, it is hereby notified for general information that the Corporation of Calcutta propose to make the following bye-laws under clause (8) of section 478 with a view to rendering the water storage cistern mosquito-proof as recommended by the Assistant Director of the Malaria Survey of India:—

1. Every cistern and reserve tank of water shall be mosquito-proof and with that end in view shall comply with the following conditions:—

(*a*) The lid shall be well fitted and of the pattern approved by the Executive Engineer, Waterworks, shall be kept closed by strong bolts and nuts.

(*b*) The warning pipe or overflow pipe attached to the cistern or reserve tank shall be protected by a perforated metal cap of a standard pattern approved by the Executive Engineer, Waterworks, and not by wire gauze.

(*c*) The punch-hole made by the Corporation Waterworks Department shall be either utilised for connecting pipes, or properly closed.

(*d*) Water-gauges necessitating an apperture in the roof or side of a cistern shall be mosquito-proof.

2. No new water connection should be given to any premises until the storage cisterns installed therein have been certified as mosquito-proof by the Executive Engineer, Waterworks, in accordance with the bye-laws.

3. Every cistern and reserve tank shall be numbered by the Corporation in a conspicuous place to facilitate inspection.

4. Every cistern and reserve tank shall be kept in good repair or shall be changed.

5. (*i*) If any cistern or reserve tank be found on examination by the Mosquito Controlling Officer to be non-mosquito-proof or otherwise not in compliance with any of the aforesaid conditions, he may by written notice require the owner or occupier of the premises—

(*a*) to replace the same, or

(*b*) to make such alterations therein as may be specified in the notice.

(*ii*) If any notice issued under the aforesaid bye-law is not complied within seven days from the date of service thereof the Corporation may forthwith carry out the work and costs thereof shall be payable by the person to whom the notice was issued.

A printed copy of the bye-law is open to public inspection free of charge. It may also be purchased on payment of a fee of annas two from the Central Record-keeper, Central Municipal Office, on any working day between the hours of 12 and 3 p.m.

Any person having any objection to the proposed bye-law should submit the same on or before the 14th March 1935, after which date the proposed bye-law will be further proceeded with.

J. C. MUKERJEA,

Chief Executive Officer.

Vital statistics of towns with a population of 50,000 and over of the Bengal Presidency for the week ending Saturday, the 2nd February 1935.

Districts.	Nos.	Towns.	Population under registration according to Census of 1931.			Births registered.		Deaths registered.																								
			Male.	Female.	Total.	Number registered (excluding still-births).	Still-births registered.	Cholera.	Small-pox.	Plague.	Cerebro-spinal meningitis.	Malaria.	Enteric fever.	Measles.	Relapsing fever.	Kala-azar.	Influenza.	Other fevers.	Dysentery.	Diarrhœa.	Pneumonia.	Phthisis.	Other respiratory diseases.	Injuries including suicide.	Deaths from child-birth.	Other causes.	Total of all causes.			Total of corresponding week of the previous year.		
																										Male.	Female.	Total.	Male.	Female.	Total.
Calcutta ..	1	Calcutta ..	814,948	381,786	1,196,734	401	46	29	16	..	20	9	11	3	..	4	9	30	33	12	90	61	75	12	2	332	423	325	748	444	284	728
Burdwan ..	2	Asansol Mining Settlement.	209,544	172,136	382,680	202	1	..	..	..	..	6	..	..	..	..	..	84	12	2	9	..	9	2	..	81	99	106	205	114	104	218
Howrah ..	3	Howrah ..	145,120	79,753	224,873	108	10	3	2	..	..	2	4	..	..	..	..	7	6	7	21	3	20	4	..	56	78	57	135	86	78	164
Dacca ..	4	Dacca ..	79,365	59,153	138,518	103	3	1	..	..	..	..	..	..	..	..	..	1	5	1	6	1	11	1	1	37	31	34	65	29	20	49
24-Parganas ..	5	Bhatpara ..	60,134	24,841	84,975	28	..	1	..	..	..	..	..	..	..	..	..	7	..	..	3	..	2	..	..	5	10	8	18	16	10	26
Chittagong ..	6	Chittagong	35,049	18,107	53,156	35	..	..	..	..	..	..	..	..	..	..	..	4	1	..	1	..	..	..	..	6	4	8	12	6	3	9

Calcutta, the 11th February 1935.

R. B. KHAMBATA, M.R.C.S. (ENG.), L.R.C.P. (LOND.), D.P.H. (CAMB.), *Director of Public Health, Bengal.*

Printed and published by the Superintendent, Government Printing, Bengal Government Press, Alipore, Bengal, on the 14th February 1935.

Registered No. C207

No. 8 of 1935

The Calcutta Gazette

Published by Authority

THURSDAY, FEBRUARY 21, 1935.

CONTENTS:

	Page.
Part I.—Orders and Notifications by the Governor of Bengal, the Government of Bengal, the High Court, Government Treasury, etc.	351—417
Part IA.—Orders and Notifications by the Government of India republished for general information	25—28
Part IB.—Educational Notices ..	335—346
Part II.—Advertisements	141—164
Part III.—Acts of the Bengal Legislative Council—	
The Bengal Muhammadan Marriages and Divorces Registration (Amendment) Act, 1934	1—4
Part IV.—Bills introduced in the Bengal Legislative Council, Reports of Select Committees presented or to be presented to that Council, and Bills published before introduction in that Council ..	*Nil*
Part V.—Acts of the Indian Legislature assented to by the Governor-General and Ordinances promulgated under section 72 of the Government of India Act ..	*Nil*
Part VI.—Bills introduced in the Council of State and Legislative Assembly, Reports of Select Committees presented to the Council and Assembly and Bills published under rule 18 of the Indian Legislative Rules—	
The Indian Mines (Amendment) Bill, 1935, with Statement of Objects and Reasons and Notes on Clauses ..	1—5
Supplement No. 8 :—	
Cotton Ginning and Pressing—Monthly Return of Vital Statistics—Monthly Weather and Crop Report—Weekly Weather and Crop Report—Corporation of Calcutta Notices—River water-levels—Weekly gauge readings—Weekly Vital Statistics	279—296

PART I

Orders and Notifications by the Governor of Bengal, the Government of Bengal, the High Court, Government Treasury, etc.

Orders by His Excellency the Governor of Bengal.

No. 1564A.—13th February 1935.—Under the provisions of section 93 of the Government of India Act, His Excellency the Governor is pleased to accept the resignation tendered by Mr. Norman George Armstrong Edgley, I.C.S., of his office of member of the Bengal Legislative Council.

No. 1568A.—13th February 1935.—In exercise of the powers conferred by rule 26 (2) of the Bengal Electoral Rules, His Excellency the Governor is pleased to nominate Mr. Herbert Daniel Benjamin, I.C.S., an official, to be a member of the Bengal Legislative Council.

No. 1623A.—15th February 1935.—In exercise of the power conferred on him under clause (*b*) of the proviso to sub-section (2) of

section 72A of the Government of India Act, His Excellency the Governor hereby nominates Major-General D. P. Goil, I.M.S., to be a member of the Bengal Legislative Council for the purposes of the Government and non-official member's Bills mentioned below with effect from this date until the conclusion of proceedings in relation to these Bills:—

Government Bill.

Albert Victor Leper Hospital Bill, 1934.

Non-official Member's Bill.

Bengal Medical (Amendment) Bill by Babu Jitendra Lal Banerjee.

No. 1704A. — 19th February 1935.—In exercise of the power conferred on him under clause (*b*) of the proviso to sub-section (*2*) of section 72A of the Government of India Act, His Excellency the Governor hereby nominates Mr. F. A. Sachse, C.I.E., I.C.S., to be a member of the Bengal Legislative Council for the purpose of the non-official member's Bill mentioned below with effect from this date until the conclusion of proceedings in relation to this Bill:—

The Bengal Tenancy (Amendment) Bill, 1934, by Babu Satish Chandra Ray Chaudhuri.

E. N. BLANDY,
Chief Secy. to the Govt. of Bengal (offg.).

Orders by the Government of Bengal.

No. 1702A.

Appointments and Transfers.

GENERAL.

Dacca.—No. 1607A.—14th February 1935. —Mr. J. R. Blair, I.C.S., Additional District Magistrate, Dacca, is appointed to be Magistrate and Collector of that district.

Presidency Divn.-24-Parganas.—No. 1627A. —15th February 1935.—Mr. K. A. L. Hill, I.C.S., acted as Commissioner of the Presidency Division in addition to his duties as Magistrate and Collector, 24-Parganas, for two days, viz., the 31st January 1935 and 1st February 1935.

Bakarganj-Faridpur.—No. 1642A. — 15th February 1935.—Mr. Sushil Kumar Dey, I.C.S., Joint Magistrate and Deputy Collector, Bakarganj, is appointed to have charge of the Madaripur subdivision of the Faridpur district.

POLICE.

Faridpur-Murshidabad. — No. 1508A. — 12th February 1935.—Mr. Karunamay Ray, officiating Additional Superintendent of Police, Faridpur, is appointed to act, until further orders, as Superintendent of Police, Murshidabad.

Murshidabad-Faridpur.—No. 1511A.—12th February 1935.—Mr. Bankim Chandra Das Gupta, officiating Superintendent of Police, Murshidabad, is appointed to act, until further orders, as Additional Superintendent of Police, Faridpur, and, under the provisions of section 1 of Act V of 1861, to perform the duties of a Superintendent of Police in that district.

24-Parganas.—No. 1514A.—12th February 1935.—Rai Sahib Tapendra Kumar Ghosh Chaudhuri, I.P., Superintendent of Police, on leave, is appointed to be Superintendent of Police, Eastern Bengal Railway, Sealdah.

Khulna-24-Parganas. — No. 1517A. — 12th February 1935.—Mr. J. M. Mackenzie, I.P., Superintendent of Police, Khulna, is appointed to be Superintendent of Police, 24-Parganas.

Mymensingh - Khulna. — No. 1520A. — 12th February 1935.—Mr. Khondkar Fazle Sobhan, I.P., officiating Additional Superintendent of Police, Mymensingh, is appointed to act, until further orders, as Superintendent of Police, Khulna.

Burdwan-Mymensingh.—No. 1523A.—12th February 1935.—Mr. Muazzam Hussain Khan, I.P., Assistant Superintendent of Police, Asansol, Burdwan, is appointed to act, until further orders, as Additional Superintendent of Police, Mymensingh.

Burdwan.—No. 1526A. — 12th February 1935.—Mr. R. C. Pollard, I.P., Assistant Superintendent of Police, on leave, is posted to the Asansol subdivision of the Burdwan district and is placed in charge of the police work of that subdivision.

Burdwan-Rajshahi. — No. 1529A. — 12th February 1935.—Mr. E. B. Jones, I.P., Deputy Inspector-General of Police, Burdwan Range, is appointed to be Deputy Inspector-General of Police, Rajshahi Range.

Rangpur-Burdwan. — No. 1532A. — 12th February 1935. — Mr. H. C. Hunt, I.P., Superintendent of Police, Eastern Bengal and Assam Bengal Railways, Saidpur, Rangpur, is appointed to act, until further orders, as Deputy Inspector-General of Police, Burdwan Range.

Rangpur.—No. 1535A.—12th February 1935.—Mr. Azizul Haq Chaudhuri, I.P., Superintendent of Police, on leave, is appointed to be Superintendent of Police, Eastern Bengal and Assam Bengal Railways, Saidpur, Rangpur.

Pabna-Bakarganj. — No. 1538A. — 12th February 1935.—Mr. Hirendra Nath Gupta, I.P., officiating Superintendent of Police, Pabna, is appointed to act, until further orders, as Additional Superintendent of Police, Bakarganj.

Bakarganj-Pabna. — No. 1541A. — 12th February 1935.—Mr. Zakir Husain, I.P., officiating Additional Superintendent of Police, Bakarganj, is appointed to act, until further orders, as Superintendent of Police, Pabna.

Leave.

GENERAL.

Darjeeling.—No. 1467A. — 11th February 1935.—Babu Mati Chand Pradhan, Deputy Magistrate and Deputy Collector, on probation, Darjeeling, is allowed leave on average pay, under rule 81 (*b*) (*ii*) of the Fundamental Rules,from the 28th February 1935 to the 14th March 1935, inclusive.

Dacca. — No. 1482A. — 12th February 1935.—Babu Hira Lal Mukharji, officiating Additional District and Sessions Judge, Dacca, is allowed leave on average pay, under rule 81 (*b*) (*ii*) of the Fundamental Rules, from the 28th January 1935 to the 18th April 1935, inclusive.

Hooghly. — No. 1505A. — 12th February 1935.—Babu Bipul Chandra Chatarji, Deputy Magistrate and Deputy Collector, Serampore, Hooghly, was allowed leave on average pay for seven days, under rule 81 (*b*) (*ii*) of the Fundamental Rules, with effect from the 1st February 1935.

No. 1584A.—13th February 1935. — The orders of the 7th December 1934, granting leave to Mr. C. A. Noronha, Deputy Magistrate and Deputy Collector, are cancelled.

No. 1609A.—14th February 1935.—Maulvi Kabiruddin Ahmad Khan, Sub-Deputy Collector, was allowed leave on average pay up to the 11th January 1935, under rule 81 (*b*) (*ii*) of the Fundamental Rules, in extension of the leave granted to him under the orders of the 8th January 1935.

No. 1651A.—15th February 1935.—Mr. L. R. Chambers, I.C.S., has been granted by the High Commissioner for India an extension of leave not due on half average pay for one month.

POLICE.

Mymensingh.—No. 1594A.—13th February 1935.—Mr. Shah Abul Hasanat Muhammad Ismail, officiating Additional Superintendent of Police, Mymensingh, is allowed leave on average pay for twenty-one days, under rule 81 (*b*) (*ii*) of the Fundamental Rules, with effect from the 2nd January 1935.

Dacca.—No. 1595A.—13th February 1935. —Mr. D. S. Maxted, Probationary Assistant Superintendent of Police, Dacca, is allowed leave on average pay for two days from the 2nd January 1935, under rule 81 (*b*) (*i*) of of the Fundamental Rules.

ECCLESIASTICAL.

Calcutta. — No. 1653A. — 15th February 1935.—The Ven'ble O. W. Birch, M.C., Archdeacon of Calcutta and Senior Chaplain, St. John's Church, Calcutta, is allowed leave for eighteen months and eighteen days, viz., leave on average pay for five months and twelve days and in continuation leave on half average pay for the remaining period, under rule 6A of the leave rules for Chaplains on the Indian Ecclesiastical Establishment, with effect from the 1st March 1935.

E. N. BLANDY,

Chief Secy. to the Govt. of Bengal (offg.).

POLITICAL DEPARTMENT.

Political.

NOTIFICATION.

No. 1772P.—19th February 1935. — In exercise of the power conferred by section 24 of the Bengal Suppression of Terrorist Outrages Act, 1932 (Ben. Act XII of 1932), the Governor in Council is pleased to invest Khan Sahib Abdul Majid (III), Subdivisional Magistrate, Thakurgaon, district Dinajpur, with the powers of a Special Magistrate under the said Act.

E. N. BLANDY,

Chief Secy. to the Govt. of Bengal (offg.).

POLICE DEPARTMENT.

NOTIFICATION.

Calcutta-Howrah. — No. 830Pl. — 11th February 1935.—In exercise of the powers conferred by section 11 of the Indian Motor Vehicles Act, 1914 (VIII of 1914), the Governor in Council is pleased to make the following amendment in the Calcutta and Howrah Motor Vehicles Rules, 1930, published under notification No. 1398Pl., dated the 19th March 1930, at pages 415-473, Part I of the *Calcutta Gazette* of the 27th March 1930:—

Amendment.

Insert the following as rule 55A of the said rules:—

"*Horn.*—No motor lorry shall carry more than one bulb horn. Such horn shall be of a pattern approved by the Commissioner and shall be sealed to the lorry in the manner approved by him.

No owner, driver or attendant shall break or tamper with or permit any other person to break or tamper in any way with the seal placed on the approved horn or on the mechanism thereof, and no person shall carry or use in a motor lorry any bulb horn other than that sealed to the lorry by the Commissioner."

E. N. BLANDY,

Chief Secy. to the Govt. of Bengal (offg.).

Orders by the Inspector-General of Police, Bengal.

Calcutta.—No. 1595A.—14th February 1935. —**Dinajpur - Rajshahi.**—Sub-Inspector Afaz-uddin Ahmad of Dinajpur, is appointed officiating Inspector, Rajshahi, to fill the temporary vacancy in the cadre, *vice* Babu Nirod Chandra Mukharji, Inspector, temporarily employed in the District Intelligence Branch, Rajshahi.

T. J. A. CRAIG,

Inspector-General of Police, Bengal.

JUDICIAL DEPARTMENT.

No. 1703A.

Powers.

Dacca.—No. 1477A.—11th February 1935. —Maulvi Khurshed Alam Chaudhuri, Deputy Magistrate, on probation, Dacca, is vested with the powers of a Magistrate of the second class.

E. N. BLANDY,

Chief Secy. to the Govt. of Bengal (offg.).

Appointments and Transfers.

Mymensingh.—No. 1163J.—11th February 1935.—In exercise of the powers conferred by sections 14 and 15 and the proviso to section 357 of the Code of Criminal Procedure, 1898 (Act V of 1898), the Governor in Council is pleased—

(*a*) to confer upon Babu Pran Kumar Chakrabatti the powers of a Magistrate of the second class, in the district of Mymensingh, for a period of three years from the 10th March 1935, in respect to such cases as may be made over to him within the limits of the Sadar subdivision of the said district,

(*b*) to direct that he shall, in addition to sitting singly, sit as a member of the Sadar bench in the said district, and

(*c*) to direct him to take down evidence in the English language.

24-Parganas.—No. 1177J.—11th February 1935.—In exercise of the powers conferred by sections 14 and 15 and the proviso to section 357 of the Code of Criminal Procedure, 1898 (Act V of 1898), the Governor in Council is pleased—

(*a*) to confer upon Babu Gour Mohan Sadhukhan the powers of a Magistrate of the third class, in the district of the 24-Parganas, for a period of three years from the 14th March 1935,

(*b*) to direct him to sit as a member of the Kanchrapara bench in the said district, and

(*c*) to direct him to take down evidence in the English language.

24-Parganas.—No. 1179J.—11th February 1935.—In exercise of the powers conferred by sections 14 and 15 and the proviso to section 357 of the Code of Criminal Procedure, 1898 (Act V of 1898), the Governor in Council is pleased—

(*a*) to confer upon Maulvi Kazi Muhammad Gazanfarali the powers of a Magistrate of the third class, in the district of the 24-Parganas, for a period of three years from the 24th March 1935,

(*b*) to direct him to sit as a member of the Kanchrapara bench in the said district, and

(*c*) to direct him to take down evidence in the English language.

Hooghly. — No. 1181J. — 11th February 1935.—In exercise of the powers conferred by sections 14 and 15 and the proviso to section 357 of the Code of Criminal Procedure, 1898 (Act V of 1898), the Governor in Council is pleased—

(*a*) to confer upon Dr. Jiban Hari Samanta the powers of a Magistrate of the third class, in the district of Hooghly, for a period of three years from the date of this notification,

(*b*) to direct him to sit as a member of the Arambagh bench in the said district, and

(*c*) to direct him to take down evidence in the English language.

Hooghly. — No. 1267J. — 12th February 1935.—In exercise of the powers conferred by sections 14 and 15 and the proviso to section 357 of the Code of Criminal Procedure, 1898 (Act V of 1898), the Governor in Council is pleased—

(*a*) to confer upon Babu Harihar Banarji the powers of a Magistrate of the third class, in the district of Hooghly, for a period of three years from the 12th March 1935,

(*b*) to direct him to sit as a member of the Bhadreswar bench in the said district, and

(*c*) to direct him to take down evidence in the English language.

Midnapore.—No. 1269J. — 12th February 1935.—In exercise of the powers conferred by sections 14 and 15 and the proviso to section 357 of the Code of Criminal Procedure, 1898 (Act V of 1898), the Governor in Council is pleased—

(*a*) to confer upon Babu Surendra Krishna Ray the powers of a Magistrate of the second class, in the district of Midnapore, for a period of three years from the date of this notification, in respect to such cases as may be made over to him within the limits of the Ghatal subdivision of the said district,

(*b*) to direct that he shall, in addition to sitting singly, sit as a member of the Ghatal bench in the said district, and

(*c*) to direct him to take down evidence in the English language.

Hooghly. — No. 1286J.—12th February 1935.—In exercise of the powers conferred by sections 14 and 15 and the proviso to section 357 of the Code of Criminal Procedure, 1898 (Act V of 1898), the Governor in Council is pleased—

(*a*) to confer upon Babu Rabindra Kumar Goswami the powers of a Magistrate of the third class, in the district of Hooghly, for a period of three years from the date of this notification,

(*b*) to direct him to sit as a member of the Serampore bench in the said district, and

(*c*) to direct him to take down evidence in the English language.

Hooghly-Rangpur. — No. 1288J. — 12th February 1935.—Babu Achintya Kumar Sen Gupta, officiating munsif of Amta, in the district of Hooghly, acted as a munsif of Kurigaon, in the district of Rangpur, from the 10th November to the 22nd December 1934.

This cancels this department notification No. 8678J., dated the 16th November 1934, published at page 1834, Part I of the *Calcutta Gazette* of the 22nd November 1934.

Birbhum. — No. 1333J. — 14th February 1935.—In exercise of the powers conferred by sections 14 and 15 and the proviso to section 357 of the Code of Criminal Procedure, 1898 (Act V of 1898), the Governor in Council is pleased—

(*a*) to confer upon Rai Nirmal Shib Banarji Bahadur the powers of a Magistrate of the second class, in the district of Birbhum, for a period of three years from the 22nd March 1935, in respect to such cases as may be made over to him within the limits of the Sadar subdivision of the said district,

(*b*) to direct that he shall, in addition to sitting singly, sit as a member of the Suri bench in the said district, and

(*c*) to direct him to take down evidence in the English language.

Dinajpur.—No. 1350J. — 14th February 1935.—In exercise of the powers conferred by section 14 and the proviso to section 357 of the Code of Criminal Procedure, 1898 (Act V of 1898), the Governor in Council is pleased—

(*a*) to confer upon Mr. Mioncher Hormasjee Dastoor the powers of a Magistrate of the second class, in the district of Dinajpur, for a period of three years from the date of this notification, in respect to such cases as may be made over to him within the limits of the Sadar subdivision of the said district, and

(*b*) to direct him to take down evidence in the English language.

Rangpur. — No. 1363J. — 16th February 1935.—In exercise of the powers conferred by sections 14 and 15 and the proviso to section 357 of the Code of Criminal Procedure, 1898 (Act V of 1898), the Governor in Council is pleased—

(*a*) to confer upon Khan Bahadur Maulvi Muhammad Abdul Majid the powers of a Magistrate of the first class, in the district of Rangpur, for a period of three years from the date of this notification, in respect to such cases as may be made over to him within the limits of the Gaibandha subdivision of the said district,

(*b*) to direct that he shall, in addition to sitting singly, sit as a member of the Gaibandha bench in the said district, and

(*c*) to direct him to take down evidence in the English language.

Malda.—No. 1365J.—7th February 1935.—In exercise of the powers conferred by sections 14 and 15 of the Code of Criminal Procedure, 1898 (Act V of 1898), the Governor in Council is pleased—

(*a*) to confer upon Rai Sahib Jadu Nandan Chaudhuri the powers of a Magistrate of the third class, in the district of Malda, for a period of three years from the 10th February 1935, in respect to such cases as may be made over to him within the limits of the said district, and

(*b*) to direct that he shall, in addition to sitting singly, sit as a member of the Sadar bench in the said district.

Bakarganj - Burdwan.—No. 1367J.—16th February 1935.—Babu Amalendu Nath Lahiri, munsif, employed as Stamp Inspector, Barisal, in the district of Bakarganj, is appointed temporarily as Stamp Inspector, Burdwan.

Leave.

24-Parganas.—No. 1336J. — 17th January 1935.—Maulvi Enayetur Rahman, munsif under orders of transfer to Baruipur, in the district of the 24-Parganas, is allowed leave on average pay for thirty-six days, under rules 81 (*b*) (*ii*) and 82 (*b*) of the Fundamental Rules, with effect from the 2nd January 1935.

Rangpur.—No. 1337J.—21st January 1935. —Babu Rebati Mohan Chatarji, munsif of Rangpur (Sadar), is allowed leave on average pay, for thirteen days, under rules 81 (*b*) (*ii*) and 82 (*b*) of the Fundamental Rules, with effect from the 4th February 1935.

Dacca.—No. 1338J. — 22nd January 1935. —Babu Niranjan Banarji, munsif of Narayanganj, in the district of Dacca, is allowed leave on average pay for ten days, under rules 81 (*b*) (*ii*) and 82 (*b*) of the Fundamental Rules, with effect from the 4th February 1935.

Pabna-Bogra.—No. 1339J. — 29th January 1935.—Babu Manindra Mohan Bhattacharji, munsif of Pabna, in the district of Pabna and Bogra, is allowed leave on average pay for four days, under rules 81 (*b*) (*ii*) and 82 (*b*) of the Fundamental Rules, with effect from the 2nd January 1935, in modification of the leave granted to him under the orders of the 12th December 1934.

Nadia.—No. 1340J. — 2nd February 1935. —Babu Dwijendra Nath Pal, munsif of Ranaghat, in the district of Nadia, is allowed leave for one month from the 22nd January 1935, viz., leave on average pay for twenty-seven days, under rules 81 (*b*) (*ii*) and 82 (*b*) of the Fundamental Rules, and leave on half average pay for the remaining period, under rule 81 (*d*) of those rules.

Jessore.—No. 1341J.—2nd February 1935. —Maulvi Abdul Awal, munsif of Jessore (Sadar), is allowed leave on average pay for the period from the 9th to the 21st January 1935, under rules 81 (*b*) (*ii*) and 82 (*b*) of the Fundamental Rules.

No. 1342J.—2nd February 1935. — Babu Satish Chandra Sen, munsif, is allowed leave on half average pay for the period from the 28th January to the 28th February 1935, under rule 81 (*d*) of the Fundamental Rules, in extension of the leave granted to him under the orders of the 15th June 1934.

Resignation.

Hooghly.—No. 1284J. — 12th February 1935.—The Governor in Council is pleased to accept the resignation tendered by Babu Kshitish Chandra Goswami of his appointment as an Honorary Magistrate of the Serampore bench in the district of Hooghly.

Promotions and Confirmations.

Faridpur - Jessore - Bakarganj - Dacca - 24-Parganas - Khulna - Burdwan - Bogra. — No. 1165J.—11th February 1935. — The following promotions and confirmations are sanctioned in the Bengal Civil Service (Judicial):—

Promoted to the selection grade of Subordinate Judges on Rs. 1,200.

Mr. Rebati Mohan Goswami, Additional District and Sessions Judge, Faridpur, on leave (a Subordinate Judge in the selection grade on Rs. 1,000, since confirmed as District and Sessions Judge), with effect from the 28th January 1934, *vice* Mr. Debendra Chandra Biswas, confirmed as District and Sessions Judge.

Babu Madhu Sudan Ray, late officiating Additional District and Sessions Judge, Jessore (a Subordinate Judge in the selection grade on Rs. 1,000, since retired on the 3rd August 1934), with effect from the 16th February 1934, *vice* Mr. Praphulla Krishna Ghosh, confirmed as District and Sessions Judge.

Babu Manoranjan Ray, late officiating Additional District and Sessions Judge, Bakarganj (a Subordinate Judge in the selection grade on Rs. 1,000, since retired on the 25th July 1934), with effect from the 16th March 1934, *vice* Mr. Rebati Mohan Goswami, confirmed as District and Sessions Judge.

Promoted to the selection grade of Subordinate Judges on Rs. 1,000.

Babu Hira Lal Mukharji, officiating Additional District and Sessions Judge, Dacca (a Subordinate Judge below the selection grades), with effect from the 28th January 1934, *vice* Mr. Rebati Mohan Goswami, promoted.

Babu Upendra Chandra Ghosh, late officiating Additional District and Sessions Judge, 24-Parganas (a Subordinate Judge below the selection grades), with effect from the 16th February 1934, *vice* Babu Madhu Sudan Ray, promoted.

Babu Birendra Chandra Sen Gupta, late officiating Additional District and Sessions Judge, Jessore-Khulna (a Subordinate Judge below the selection grades), with effect from the 16th March 1934, *vice* Babu Manoranjan Ray, promoted.

Confirmed in the grade of Subordinate Judges below the selection grades.

Babu Basanta Kumar Ray, officiating Subordinate Judge and Assistant Sessions Judge, 24-Parganas, with effect from the 28th January 1934, *vice* Babu Hira Lal Mukharji, promoted.

He is also confirmed in his present appointment.

Babu Kshiradeswar Banarji, officiating Subordinate Judge and Assistant Sessions Judge, Asansol, in the district of Burdwan, with effect from the 16th February 1934, *vice* Babu Upendra Chandra Ghosh, promoted.

He is also confirmed in his present appointment.

Babu Sharat Chandra Mukharji, officiating Subordinate Judge and Assistant Sessions Judge, Bogra, with effect from the 16th March 1934, *vice* Babu Birendra Chandra Sen Gupta, promoted.

He is also confirmed in his present appointment.

Powers.

Burdwan.—No. 1331J. — 14th February 1935.—In exercise of the power conferred by section 14 of the Code of Criminal Procedure, 1898 (Act V of 1898), the Governor in Council is pleased to confer upon Babu Anuja Kumar Chatarji, an Honorary Magistrate of the Sadar bench, the powers of a Magistrate of the second class, in the district of Burdwan, for the period during which he has been directed to sit as a member of the said bench—

(*a*) in respect to cases brought before the said bench within the limits of the jurisdiction of the said bench, and

(*b*) in respect to such cases as may be made over to him, when sitting singly, within the limits of the Sadar subdivision of the said district.

NOTIFICATIONS.

Mymensingh.—No. 1118J.—9th February 1935.—In exercise of the power conferred by section 65 of the Bengal Village Self-Government Act, 1919 (Bengal Act V of 1919), the Governor in Council is pleased to appoint the following members of the union boards mentioned below, to be, during their term of office as such members, union benches within the jurisdiction of the union boards of which they are, respectively, members for the purposes of that section :—

Sadar (North) subdivision, Mymensingh district.

Phulpur police-station.

Sandhara union board.

Tamizuddin Ahmed.
Ibrahim Sarkar.
Tazimuddin Fakir.
Abu Taher Choudhury.
Monmohan Nag.

Rambhadrapur union board.

Imamuddin Ahamed.
Kadir Mahmud Talukdar.
Badiazzaman Sarkar.
Abdul Kaher Sarkar.
Madhusudhan Modak.

Bhaitkandi union board.

Mafizuddin Ahmed.
Md. Sadat Ali Sarkar.
Shaha Osimuddin Ahamed.
Syed Azimuddin.
Radha Charan Sarkar.

Singheswar union board.

Mafizuddin Talukdar.
Umesh Chandra Pal Sarkar.
Abdul Karim Khan.
Ali Mahmud Sarkar.
Hari Charan De Sarkar.

Phulpur union board.

Debendra Kishore Roy.
Mafizuddin Ahmed.
Abdur Rahaman Khan.
Basiruddin Sarkar.
Prabhat Chandra Datta.

Payari union board.

Asutosh Choudhury.
Md. Ismail.
Aptabuddin Fakir.
Mahesh Chandra Sarkar.
Md. Reazuddin Ahamed.

Balikhan union board.

Md. Alauddin Sarkar.
Md. Abdul Jalil Mea.
Nabi Hossain Sarkar.
Md. Arfan Ali Sarkar.
Surendra Nath Sarkar.

Kakni union board.

Bidhu Bhusan Bhattacherjee.
Dina Nath Bhaumik.
Abdul Latif Master.
Mudarat Mir.
Md. Mafizuddin Master.

Rupshi union board.

Kalimuddin Fakir.
Syed Abdul Gafur.
Taleh Hossain Sarkar.
Jagat Chandra Choudhury.
Gour Sundar Datta.

Balia union board.

Akshoy Kumar Sarkar.
Jonab Ali Sarkar.
Serajul Huq.
Mahim Chandra Sarkar.
Mirza Samser Beg.

Boula union board.

Imam Hossain Khan.
Ahamed Ali Fakir.
Sarat Chandra De Sarkar.
Obeidulla Talukdar.
Amulya Chandra Roy.

Dhakua union board.

Umesh Chandra Dhar Roy.
Durga Charan De Sarkar.
A. K. M. Abdul Hye *alias* Mirja Ali Master.
Jalim Sarkar.
Tamizuddin Sarkar.

Banihala union board.

Taranath Koar.
Devidas Majumdar.
Md. Taheruddin Sarkar.
Elahi Baksha Khondkar.
Arman Beg.

Tarakanda union board.

Kunja Lal Singha Roy.
Erfan Ali Sarkar.
Jogesh Chandra Sarkar.
Fazaruddin Akanda.
Asmat Ali Sarkar.

Galagaon union board.

Mafizuddin Ahamed.
Nawab Ali Biswas.
Bepin Chandra Bhattacherjee.
Momen Ali Sarkar.
Md. Hyder Ali.

Sidhla union board.

Md. Ismail.
Syed Kamardowla.
Md. Gunjar Ali Sarkar.
Upendra Kishore Nandy.
Suresh Chandra Talukdar.

Mymensingh.—No. 1119J. — 9th February 1935.—In exercise of the power conferred by section 73 of the Bengal Village Self-Government Act, 1919 (Bengal Act V of 1919), the Governor in Council is pleased to appoint the following members of the union boards mentioned below, to be, during their term of office as such members, union courts within the jurisdiction of the union boards of which they are, respectively, members for the purposes of that section:—

Sadar (North) subdivision, Mymensingh district.

Phulpur police-station.

Sandhara union board.

Tamizuddin Ahmed.
Ibrahim Sarkar.
Tazimuddin Fakir.
Abu Taher Choudhury.
Monmohan Nag.

Rambhadrapur union board.

Imamuddin Ahamed.
Kadir Mahmud Talukdar.
Badiazzaman Sarkar.
Abdul Kaher Sarkar.
Madhusudhan Modak.

Bhaitkandi union board.

Mafizuddin Ahmed.
Md. Sadat Ali Sarkar.
Shaha Osimuddin Ahamed,
Syed Azimuddin.
Radha Charan Sarkar,

Singheswar union board.

Mafizuddin Talukdar.
Umesh Chandra Pal Sarkar.
Abdul Karim Khan.
Ali Mahmud Sarkar.
Hari Charan De Sarkar.

Phulpur union board.

Debendra Kishore Roy.
Mafizuddin Ahmed.
Abdur Rahaman Khan.
Basiruddin Sarkar.
Prabhat Chandra Datta.

Payari union board.

Asutosh Choudhury.
Md. Ismail.
Aptabuddin Fakir.
Mahesh Chandra Sarkar.
Md. Reazuddin Ahamed.

Balikhan union board.

Md. Alauddin Sarkar.
Md. Abdul Jalil Mea.
Md. Nabi Hossain Sarkar.
Md. Arfan Ali Sarkar.
Surendra Nath Sarkar.

Kakni union board.

Bidhu Bhusan Bhattacherjee.
Dina Nath Bhaumik.
Abdul Latif Master.
Mudarat Mir.
Md. Mafizuddin Master.

Rupshi union board.

Kalimuddin Fakir.
Syed Abdul Gafur.
Taleh Hossain Sarkar.
Jagat Chandra Choudhury.
Gour Sundar Datta.

Balia union board.

Akshoy Kumar Sarkar.
Jonab Ali Sarkar.
Serajul Huq.
Mahim Chandra Sarkar.
Mirza Samser Beg.

Boula union board.

Imam Hossain Khan.
Ahamed Ali Fakir.
Sarat Chandra De Sarkar.
Obeidulla Talukdar.
Amulya Chandra Roy.

Dhakua union board.

Umesh Chandra Dhar Roy.
Durga Charan De Sarkar.
A. K. M. Abdul Hye *alias* Mirja Ali Master.
Jalim Sarkar.
Tamizuddin Sarkar.

Banihala union board.

Taranath Koar.
Devidas Majumdar.
Md. Taheruddin Sarkar.
Elahi Baksha Khondkar.
Arman Beg.

Tarakanda union board.

Kunja Lal Singha Roy.
Erfan Ali Sarkar.
Jogesh Chandra Sarkar.
Fazaruddin Akanda.
Asmat Ali Sarkar.

Galagaon union board.

Mafizuddin Ahamed.
Nawab Ali Biswas.
Bepin Chandra Bhattacherjee.
Momen Ali Sarkar.
Md. Hyder Ali.

Sidhla union board.

Md. Ismail.
Syed Kamardowla.
Md. Gunjar Ali Sarkar.
Upendra Kishore Nandy.
Suresh Chandra Talukdar.

Dacca.—No. 1183J.—11th February 1935. —In exercise of the power conferred by section 65 of the Bengal Village Self-Government Act, 1919 (Bengal Act V of 1919), the Governor in Council is pleased to appoint the following members of the Norsingdi union board within the Norsingdi police-station in the Narayanganj subdivision of the Dacca district, to be, during their term of office as such members, a union bench within the jurisdiction of the said union board for the purposes of that section:—

Babu Pratap Chandra Das.
Babu Man Mohan Poddar.
Babu Shailendra Nath Roy.
Munshi Belayet Hossain.
Munshi Nayebali Mollah.

2. This notification will take effect from the date of the first meeting of the reconstituted union board at which a quorum is present.

Dacca.—No. 1184J.—11th February 1935. —In exercise of the power conferred by section 73 of the Bengal Village Self-Government Act, 1919 (Bengal Act V of 1919), the Governor in Council is pleased to appoint the following members of the Norsingdi union board within the Norsingdi police-station in the Narayanganj subdivision of the Dacca district, to be, during their term of office as such members, a union court within the jurisdiction of the said union board for the purposes of that section:—

Babu Pratap Chandra Das.
Babu Man Mohan Poddar.
Babu Shailendra Nath Roy.
Munshi Belayet Hossain.
Munshi Nayebali Mollah.

2. This notification will take effect from the date of the first meeting of the reconstituted union board at which a quorum is present.

Dacca.—No. 1185J.—11th February 1935. —In exercise of the power conferred by section 65 of the Bengal Village Self-Government Act, 1919 (Bengal Act V of 1919), the Governor in Council is pleased to appoint the following members of the Tumulia union board within the Rupganj police-station in the Narayanganj subdivision of the Dacca district, to be, during their term of office as such members, a union bench within the jurisdiction of the said union board for the purposes of that section:—

Maulvi Abdus Samad Sarkar.
Munshi Anwaruddin Ahmad.
Babu Raj Mohan Baroi.
Mr. Ali Kosta.

2. This notification will take effect from the date of the first meeting of the reconstituted union board at which a quorum is present.

Dacca.—No. 1186J.—11th February 1935. —In exercise of the power conferred by section 73 of the Bengal Village Self-Government Act, 1919 (Bengal Act V of 1919), the Governor in Council is pleased to appoint the following members of the Tumulia union board within the Rupganj police-station in the Narayanganj subdivision of the Dacca district, to be, during their term of office as such members, a union court within the jurisdiction of the said union board for the purposes of that section:—

Maulvi Abdus Samad Sarkar.
Munshi Anwaruddin Ahmad.
Babu Raj Mohan Baroi.
Mr. Ali Kosta.

2. This notification will take effect from the date of the first meeting of the reconstituted union board at which a quorum is present.

Dacca.—No. 1187J.—11th February 1935. —In exercise of the power conferred by section 65 of the Bengal Village Self-Government Act, 1919 (Bengal Act V of 1919), the Governor in Council is pleased to appoint the following members of the Danga union board within the Rupganj police-station in the Narayanganj subdivision of the Dacca district, to be, during their term of office as such members, a union bench within the jurisdiction of the said union board for the purposes of that section:—

Maulvi Muhammad Ehisan.
Maulvi Abdul Kuddus.
Munshi Muhammad Sharafat Ali.
Babu Raj Mohan Pal.

2. This notification will take effect from the date of the first meeting of the reconstituted union board at which a quorum is present.

Dacca.—No. 1188J.—11th February 1935.—In exercise of the power conferred by section 73 of the Bengal Village Self-Government Act, 1919 (Bengal Act V of 1919), the Governor in Council is pleased to appoint the following members of the Danga union board within the Rupganj police-station in the Narayanganj subdivision of the Dacca district, to be, during their term of office as such members, a union court within the jurisdiction of the said union board for the purposes of that section:—

Maulvi Muhammad Ehisan.
Maulvi Abdul Kuddus.
Munshi Muhammad Sharafat Ali.
Babu Raj Mohan Pal.

2. This notification will take effect from the date of the first meeting of the reconstituted union board at which a quorum is present.

Faridpur. — No. 1353J. — 15th February 1935.—In exercise of the power conferred by section 65 of the Bengal Village Self-Government Act, 1919 (Bengal Act V of 1919), the Governor in Council is pleased to appoint the following members of the Jamalpur union board within the Baliakandi police-station in the Goalundo subdivision of the Faridpur district, to be, during their term of office as such members, a union bench within the jurisdiction of the said union board for the purposes of that section:—

Babu Pravash Chandra Chattarji.
Maulvi Abdur Rashid.
Dr. Abinash Chandra Raha.

2. This notification will take effect from the date of the first meeting of the reconstituted union board at which a quorum is present.

Faridpur. — No. 1354J. — 15th February 1935.—In exercise of the power conferred by section 73 of the Bengal Village Self-Government Act, 1919 (Bengal Act V of 1919), the Governor in Council is pleased to appoint the following members of the Jamalpur union board within the Baliakandi police-station in the Goalundo subdivision of the Faridpur district, to be, during their term of office as such members, a union court within the jurisdiction of the said union board for the purposes of that section:—

Babu Pravash Chandra Chattarji.
Maulvi Abdur Rashid.
Dr. Abinash Chandra Raha.

2. This notification will take effect from the date of the first meeting of the reconstituted union board at which a quorum is present.

Rangpur.—No. 1404J. — 18th February 1935.—In exercise of the power conferred by section 65 of the Bengal Village Self-Government Act, 1919 (Bengal Act V of 1919), the Governor in Council is pleased to appoint the following members of the union boards mentioned below, to be, during their term of office as such members, union benches within the jurisdiction of the union boards of which they are, respectively, members for the purposes of that section:—

Gaibandha subdivision, district Rangpur.

Gaibandha police-station.

Kholahati union board.

Maulvi Md. Shamsul Haque.
Maulvi Md. Abdur Rashid.
Babu Brojanath Chaudhuri.

Ramchandrapur union board.

Maulvi Shafayet-Uddin Mandal.
Dr. Delwar Hossain Mandal.
Munshi Kasimuddin Ahmed.

Rangpur.—No. 1405J. — 18th February 1935.—In exercise of the power conferred by section 73 of the Bengal Village Self-Government Act, 1919 (Bengal Act V of 1919), the Governor in Council is pleased to appoint the following members of the union boards mentioned below, to be, during their term of office as such members, union courts within the jurisdiction of the union boards of which they are, respectively, members for the purposes of that section:—

Gaibandha subdivision, district Rangpur.

Gaibandha police-station.

Kholahati union board.

Maulvi Md. Shamsul Haque.
Maulvi Md. Abdur Rashid.
Babu Brojanath Chaudhuri.

Ramchandrapur union board.

Maulvi Shafayet-Uddin Mandal.
Dr. Delwar Hossain Mandal.
Munshi Kasimuddin Ahmed.

Rangpur.—No. 1406J. — 18th February 1935.—In exercise of the power conferred by section 73 of the Bengal Village Self-Government Act, 1919 (Bengal Act V of 1919), the Governor in Council is pleased to appoint the following members of the Mogalhat union board within the Lalmanirhat police-station in the Kurigram subdivision of the Rangpur district, to be, during their term of office as such members, a union court within the jurisdiction of the said union board for the purposes of that section:—

Babu Jaga Mohan Sarkar.
Babu Jogendra Kumar Saha.
Munshi Dhepu-uddin Bepari.

N. G. A. EDGLEY,
Secy. to the Govt. of Bengal.

LOCAL SELF-GOVERNMENT DEPARTMENT.

NOTIFICATIONS.

Minister-in-charge: The Hon'ble Sir Bijoy Prasad Singh Roy, Kt.

Hooghly.— No. 1136M.— 14th February 1935.—The following draft of a set of by-laws, which has been framed by the Commissioners of the Bansberia Municipality, in the district of Hooghly, under section 355 of the Bengal Municipal Act, 1932 (Bengal Act XV of 1932), and which the Government of Bengal (Ministry of Local Self-Government) propose to confirm under section 506 of the Act, is published for the information of persons likely to be affected thereby.

2. The draft will be taken into consideration on the 1st May 1935, and any objection or suggestion received by the undersigned through the District Magistrate and the Divisional Commissioner before that date will be duly considered:—

Draft by-laws.

By-laws regulating the use of, and prevention of nuisance in regard to, public water-supply, bathing and washing places, streams, channels, tanks and wells.

Definition.

1. In these by-laws the word "channel" shall include "*nala*," "river," "stream," "ditch," or "watercourse."

Penalty.

2. *Fines.*—The penalty for the infringement of any of these by-laws shall be—

(*a*) a fine not exceeding the sum stated at the foot of the by-law,

(*b*) in the case of a second or subsequent conviction for a similar offence, a fine not exceeding the sum (if any) stated in that behalf at the foot of the by-law, and

(*c*) in the case of a continuing offence, a further fine not exceeding the sum (if any) stated at the foot of the by-law as the daily fine, which daily fine may be imposed for each day after written notice of the offence from the Commissioners.

3. *Setting up obstruction.*—No person shall, without the general or special permission of the Commissioners, set up any obstruction in any channel which is a source of public water-supply.

Explanation.—The spreading of fishing-nets and the placing of fishing-traps in any such channel are included in the word "obstruction" as used in this by-law.

Fine, Rs. 10; daily fine, Rs. 2.

4. *Easing oneself.*—No person shall ease himself at the side of or into any channel.

Fine, Rs. 10.

5. *Throwing rubbish, sewage or offensive matter.*—No person shall throw, deposit or discharge any rubbish, sewage or offensive matter into any channel, tank or well.

Fine, Rs. 10; on a second or subsequent conviction, Rs. 50.

6. *Cleanliness of banks, and access for conservancy.*—Every owner or occupier of any part of the bank of any channel which is a source of public water-supply shall—

(*a*) keep such bank free from filth, dense vegetation and other obstruction, and

(*b*) at all times allow the Commissioners, or any of their servants duly authorized in this behalf, to have access to such channel for any purpose of public conservancy.

Fine, Rs. 10.

7. *Weeds.*—Any person taking weeds from a channel or tank shall completely remove them from the slope and crest of such channel or tank within three days.

Fine, Rs. 10; daily fine, Rs. 2.

8. *Masonry platforms and drains for wells.*—The owner of every well which is a source of public water-supply shall construct a masonry platform and drains to prevent the surface water falling into the well or stagnating in its vicinity.

Fine, Rs. 10; daily fine, Rs. 2.

9. *Bathing or washing near well or standpipe.*—No person shall bathe, or shall wash clothes, utensils or any other article, within a distance of ten feet from the lowest platform of any well, pump, standpipe or hydrant.

Fine, Rs. 10.

10. *Use of standpipes and fountains.*—Except with the general or special permission of the Commissioners and under such conditions as they may from time to time prescribe, no person shall use any standpipe, pump, hydrant or fountain belonging to the Commissioners for any purpose other than drawing water—

(*a*) for drinking on the spot, or

(*b*) for carrying away for domestic purposes.

Fine, Rs. 10.

11. No person shall put his mouth to any tap or cock attached to any standpipe or hydrant used by the public.

Fine, Rs. 10.

12. No person shall cause damage to any hydrant, standpipe, pump, fountain, water-tap or cock belonging to the Commissioners or tamper with any of their property connected with the waterworks in such a manner as to affect the use of public water-supply.

Fine, Rs. 20.

13. No person suffering from leprosy or any other contagious disease shall touch or draw water from any standpipe used by the public.

Fine, Rs. 20.

14. *Steeping jute, hemp, etc.*—No person shall, without the general or special permission of the Commissioners, steep in any tank or channel any jute, hemp or other vegetable matter which is likely to render the water offensive or noxious to the neighbourhood.

Fine, Rs. 10; on a second or subsequent conviction, Rs. 50.

15. *Washing infected articles.*—No person shall wash or cause to be washed in or near any tank or channel or any other receptacle for water used by the public for drinking or bathing purposes any clothes, bedding or other articles which have been used by a person suffering from any infectious or contagious disease.

Fine, Rs. 50.

16. *Bathing by infected persons.*—No person suffering from any infectious or contagious disease shall bathe in any public bathing place.

Fine, Rs. 10.

17. *Bathing places reserved for females.*—No male person above twelve years of age shall stand on or near, or bathe or wash in, any bathing place which has been reserved by the Commissioners at a meeting for the use of females only.

Fine, Rs. 10.

18. *Cattle troughs.*—No person shall use for any other purpose any drinking through which has been reserved by the Commissioners for watering cattle.

Hooghly.— No. 1138M.— 14th February 1935.—The following draft of a set of by-laws, which has been framed by the Commissioners of the Champdany Municipality, in the district of Hooghly, under section 245(*a*) and (*b*) of the Bengal Municipal Act, 1932 (Bengal Act XV of 1932), and which the Government of Bengal (Ministry of Local Self-Government) propose to confirm under section 506 of the Act, is published for the information of persons likely to be affected thereby.

2. The draft will be taken into consideration on the 1st May 1935, and any objection or suggestion received by the undersigned through the District Magistrate and the Divisional Commissioner before that date will be duly considered:—

Draft by-laws.

By-laws regarding prohibition and regulation of traffic under section 245 (a) and (b) of the Bengal Municipal Act, 1932.

Definition.

1. In these by-laws "cattle" means cattle as defined in section 3 of the Cattle Trespass Act, 1871 (I of 1871).

Penalties.

2. *Fines.*—The penalty for the infringement of any of these by-laws shall be—

(*a*) a fine not exceeding the sum stated at the foot of the by-law,

(*b*) in the case of a second or subsequent conviction for a similar offence a fine not exceeding the sum (if any) stated in that behalf at the foot of the by-law, and

(*c*) in the case of a continuing offence, a further fine not exceeding the sum (if any) stated at the foot of the by-law as the daily fine, which daily fine may be imposed for each day after written notice of the offence from the Commissioners.

Regulation of traffic on public streets.

3. *Youthful drivers.*—No owner of any carriage or cart shall allow it to be driven on any public street by a driver under fourteen years of age.

Fine, Rs. 10.

4. *Driving more than one carriage or cart.*—No driver shall drive or have in his charge on any public street more than one carriage or cart, except in the case of two carts, the hinder one of which is severely fastened to the preceding cart.

Fine, Rs. 10.

5. *Standing vehicles.*—No person shall keep standing on any public street any vehicle in such a manner as to cause inconvenience to the public, for any time longer than may reasonably be required for loading or unloading or for taking up or setting down passengers.

Fine, Rs. 10; on a second or subsequent conviction, Rs. 50.

6. *Charge of carriage or cart.*—No person shall leave any carriage or cart on any public street without a person in charge thereof.

Fine, Rs. 10; on a second or subsequent conviction, Rs. 50.

7. *Rule of the road.*—Any person driving a carriage or cart or riding a bicycle, or driving or riding an animal, or carrying a palanquin, on any public street, shall keep to his left when he passes a vehicle coming from the opposite direction or when any vehicle overtakes him, and shall keep to his right when overtaking any vehicle.

Fine, Rs. 10.

8. *Lights.*—No person shall drive any of the undermentioned vehicles or animals, or convey any palanquin, on any public street, between half-an-hour after sunset and half-an-hour before sunrise, unless lights are provided as follows:—

(*a*) every carriage must carry two conspicuous lights, one on each side,

(*b*) every cart must carry one conspicuous light,

(*c*) every elephant, camel or palanquin must be accompanied by one conspicuous light,

(*d*) every cycle must carry one conspicuous light in front.

Provided that this by-law shall not apply on nights of full moon or on the four nights before and after full moon, if and when the moon is clearly visible.

Fine, Rs. 50.

9. *Signals on motors and cycles.*—No person shall drive any motor-car or ride any motor-cycle or any tricycle or bicycle, on any public street, unless it has attached to it a bell, horn or other suitable signal in good order.

Fine, Rs. 50.

10. *Maximum load for carts.*—No cart shall, without the general or special permission of the Commissioners, carry on any public street a load in excess of twenty maunds.

Fine, Rs. 10.

11. *Vehicles laden with girders, etc.*—No person shall drive upon a public street any vehicle laden with iron girders, rails, beams, bullas, bamboos, planks or other materials of a similar character which exceed twelve feet in length, unless the vehicle be accompanied by another person and, be loaded in such a way that no portion of the said materials touches the ground.

Fine, Rs. 10.

12. *Vehicles laden with bricks, stones, etc.*—No person shall drive upon a public street any vehicle laden with bricks, stones or other materials of a similar character, unless such materials be so secured that they cannot fall on to the street.

Fine, Rs. 10.

13. *Animal laden with bamboos or timber.*—No person shall convey on any public street bamboos or timber placed on the back of any animal in such a way that any portion of such bamboos or timber touches the ground.

Fine, Rs. 10.

14. *Taking elephants or camels along a public street.*—No person shall, without the general or special permission of the Commissioners, take any elephant or camel along any public street.

Fine, Rs. 50.

15. *Taking an elephant over a bridge.*—No person shall allow any elephant in his charge to go over any bridge on any public street unless the bridge be constructed of arched masonry steel or ferro-concrete or similar durable material.

Fine, Rs. 50.

16. *Loaded pack-animals.* — No person shall drive upon a public street, at the same time, more than two loaded pack-animals.

Fine, Rs. 10.

17. No person riding or driving a mare on any public street shall allow a foal to accompany the mare unless it is secured.

Fine, Rs. 10.

18. *Driving cart in centre of a public street.*—No person shall drive a cart on the centre of any public street on which cart-tracks are provided.

Fine, Rs. 10.

19. *Sitting or sleeping.*—No person shall sit or sleep on any public street so as to obstruct traffic.

Fine, Rs. 10.

Regulation of traffic on foot-paths.

20. *Driving or riding on foot-path.*—No person shall wilfully drive or rise any vehicle or cattle on any foot-path set apart for the use of foot-passengers.

Fine, Rs. 10.

Prevention of obstructions, encroachments or excavations on or near public streets, ghats or ferries.

21. *Abandoning or letting loose cattle.*—No person shall abandon or let loose or negligently allow to get loose, any cattle, on any public street.

Fine, Rs. 10.

22. *Children playing or wandering.*—No parent or guardian of any child below the age of seven years shall allow such child to play or wander about on any public street so as to obstruct traffic.

Fine, Rs. 10.

23. *Depositing articles.*—No person shall, without the general or special permission of the Commissioners, deposit any articles on any public street, except for a temporary purpose, or use any public street as a place for keeping any vehicle or cattle, or for washing any article, or for any other private purpose.

Provided that, during the month of April, May and June, between the hours of 10 p.m. and 5 a.m., *khatias* may be laid on the side of a public street in such a manner as not to cause obstruction or danger to persons using the public street.

Fine, Rs. 10.

24. *Planting trees.*—No person shall plant a tree on any public street without the general or special permission of the Commissioners.

Fine, Rs. 10.

25. *Excavations and enclosures.*—No person shall, without the general or special permission of the Commissioners, make any excavation on any public street or on or near any ghat or public ferry or enclose any such street or any part thereof.

Fine, Rs. 10; daily fine, Rs. 2.

26. *Removing turf or cutting grass.*—No person shall, without the general or special permission of the Comissioners, remove turf or cut grass from any public street or the slopes thereof.

Fine, Rs. 10.

27. *Discharge of water.*—No person shall affix or cause to be affixed to any building owned or occupied by him any gutter, spout or other thing intended for the conveyance and discharge of water, or shall leave in any such building any opening for the discharge of water in such a way that the water discharged therefrom is thrown or falls upon a public street, except through a down pipe or other suitable contrivance reaching to the level of the public street.

Fine, Rs. 10; daily fine, Rs. 2.

28. *Breaking in horses.*—No person shall break in horses on any public street not set apart for the purpose.

Fine, Rs. 10; on a second or subsequent conviction, Rs. 50.

29. *Flying kites.*—No person shall fly a kite on any public street, or in such a way that it may fall on any public street.

Fine, Rs. 10.

30. *Playing games.*—No person shall play any game on any public street.

Fine, Rs. 10.

31. *Throwing stones or missiles.*—No person shall throw or discharge any stone or missile on or near any public street.

Fine, Rs. 10.

32. *Driving across a drain.*—No person shall drive any vehicle across a public drain in or near any public street so as to cause damage to such drain.

Fine, Rs. 10.

33. *Barbed wire.*—No owner or occupier of land abutting on any public street shall fence such land with barbed wire.

Fine, Rs. 10; daily fine, Rs. 2.

34. *Dust-bins.*—No person shall—

(*a*) place any burning material in any municipal dust-bin on or near a public street, or

(*b*) burn in any such dust-bin any paper, leaves, grass, wood or other material.

Fine, Rs. 10.

35. *Closed public street.*—No person shall take or drive any motor vehicle, carriage or cart on a public street or part of a street which is closed by order of the Commissioners to all or any specified description of wheeled traffic or displace any barrier or fence or notice erected for the purpose of closing such public street or part thereof.

Fine, Rs. 10.

Regulation of the use or occupation of public streets or places for sale of articles, etc., and provision for the levy of fees for such use or occupation.

36. *Exposing articles for sale.*—Without the general or special permission of the Commissioners which may, if they so direct, be subject to the payment of fees according to a scale prescribed by them at a meeting, no person shall use or occupy any public street or any other public place for the sale of any article or for the exercise of any calling or for setting up any booth or stall.

Fine, Rs. 10; on a second or subsequent conviction, Rs. 50.

Midnapore.—No. 1140M. — 14th February 1935.—The following draft of a set of by-laws, which has been framed by the Commissioners of the Tamluk Municipality, in the district of Midnapore, under section 245 (*a*) and (*b*) of the Bengal Municipal Act, 1932 (Bengal Act XV of 1932), and which the Government of Bengal (Ministry of Local Self-Government) propose to confirm under section 506 of the Act, is published for the information of persons likely to be affected thereby.

2. The draft will be taken into consideration on the 8th May 1935, and any objection or suggestion received by the undersigned through the District Magistrate and the Divisional Commissioner before that date will be duly considered:—

Draft by-laws.

By-laws regarding prohibition and regulation of traffic under section 245 (a) and (b) of the Bengal Municipal Act, 1932, as adopted by the Municipal Commissioners at their meeting, dated 14th July 1934.

Definition.

1. In these by-laws "cattle" means cattle as defined in section 3 of the Cattle Trespass Act, 1871 (1 of 1871).

Penalties.

2. *Fines.*—The penalty for the infringement of any of these by-laws shall be—

(*a*) a fine not exceeding the sum stated at the foot of the by-law,

(*b*) in the case of a second or subsequent conviction for a similar offence a fine not exceeding the sum (if any) stated in that behalf at the foot of the by-law, and

(*c*) in the case of a continuing offence, a further fine, not exceeding the sum (if any) stated at the foot of the by-law as the daily fine, which daily fine may be imposed for each day after written notice of the offence from the Commissioners.

Regulation of traffic on public streets.

3. *Youthful drivers.*—No owner of any carriage or cart shall allow it to be driven on any public street by a driver under fourteen years of age.

Fine, Rs. 10.

4. *Driving more than one carriage or cart.*—No driver shall drive or have in his charge on any public street more than one carriage or cart except in the case of two carts, the hinder one of which is severely fastened to the preceding cart.

Fine, Rs. 10.

5. *Standing vehicles.*—No person shall keep standing on any public street any vehicle, in such a manner as to cause inconvenience to the public, for any time longer than may reasonably be required for loading or unloading or for taking up or setting down passengers.

Fine, Rs. 10; on a second or subsequent conviction, Rs. 50.

6. *Charge of carriage or cart.*—No person shall leave any carriage or cart on any public street without a person in charge thereof.

Fine, Rs. 10; on a second or subsequent conviction, Rs. 50.

7. *Rule of the road.*—Any person driving a carriage or cart or riding a bicycle, or driving or riding an animal, or carrying a palanquin, on any public street, shall keep to his left when he passes a vehicle coming from the opposite direction or when any vehicle overtakes him, and shall keep to his right when overtaking any vehicle.

Fine, Rs. 10.

8. *Lights.*—No person shall drive any of the undermentioned vehicles or animals or convey any palanquin on any public street between half-an-hour after sunset and half-an-hour before sunrise, unless lights are provided as follows:—

(*a*) every carriage must carry two conspicuous lights, one on each side,

(*b*) every cart must carry one conspicuous lights,

(*c*) every elephant, camel or palanquin must be accompanied by one conspicuous light,

(*d*) every cycle must carry one conspicuous light in front.

Provided that this by-law shall not apply on nights of full moon or on the four nights before and after full moon, if and when the moon is clearly visible.

Fine, Rs. 50.

9. *Signals on motors and cycles.*—No person shall drive any motor-car or ride any motor-cycle or any tricycle or bicycle on any public street unless it has attached to it a bell, horn or other suitable signal in good order.

Fine, Rs. 50.

10. *Maximum load for carts.*—No cart shall, without the general or special permission of the Commissioners, carry on any public street a load in excess of twenty maunds.

Fine, Rs. 10.

11. *Vehicles laden with girders, etc.*—No person shall drive upon any public street any vehicle laden with iron girders, rails, beams, bullas, bamboos, planks or other materials of a similar character which exceed twelve feet in length, unless the vehicle be accompanied by another person and be loaded in such a way that no portion of the said materials touches the ground.

Fine, Rs. 10.

12. *Vehicles laden with bricks, stones, etc.*—No person shall drive upon a public street any vehicle laden with bricks, stones or other materials of a similar character, unless such materials be so secured that they cannot fall on to the street.

Fine, Rs. 10.

13. *Animal laden with bamboos or timber.* No person shall convey on any public street bamboos or timber placed on the back of any animal in such a way that any portion of such bamboos or timber touches the ground.

Fine, Rs. 10.

14. *Taking elephants or camels along a public street.*—No person shall, without the general or special permission of the Commissioners, take any elephant or camel along any public street.

Fine, Rs. 50.

15. *Taking an elephant over a bridge.*—No person shall allow any elephant in his charge to go over any bridge on any public street unless the bridge be constructed of arched masonry, steel or ferro-concrete or similar durable material.

Fine, Rs. 50.

16. *Loaded pack-animals.*—No person shall drive upon a public street, at the same time, more than two loaded pack-animals.

Fine, Rs. 10.

17. *Foals.*—No person riding or driving a mare on any public street shall allow a foal to accompany the mare unless it is secured.

Fine, Rs. 10.

18. *Driving cart in centre of a public street.*—No person shall drive a cart on the centre of any public street on which cart tracks are provided.

Fine, Rs. 10.

19. *Sitting or sleeping.*—No person shall sit or sleep on any public street so as to obstruct traffic.

Fine, Rs. 10.

Regulation of traffic on foot-paths.

20. *Driving or riding on foot-path.*—No person shall wilfully drive or ride any vehicle or cattle on any foot-path set apart for the use of foot-passengers.

Fine, Rs. 10.

Prevention of obstructions, encroachments or excavations on or near public streets, ghats or ferries.

21. *Abandoning or letting loose cattle.*—No person shall abandon or let loose or negligently allow to let loose, any cattle, on any public street.

Fine, Rs. 10.

22. *Children playing or wandering.*—No parent or guardian of any child below the age of seven years shall allow such child to play or wander about on any public street so as to obstruct traffic.

Fine, Rs. 10.

23. *Depositing articles.*—No person shall, without the special or general permission of the Commissioners, deposit any articles on any public street, except for a temporary purpose, or use any public street as a place for keeping any vehicle or cattle, or for washing any article, or for any other private purpose.

Provided that, during the months of April, May and June, between the hours of 10 p.m. and 5 a.m., *khatias* may be laid on the side of a public street in such a manner as not to cause obstruction or danger to persons using the public street.

Fine, Rs. 10.

24. *Planting trees.*—No person shall plant a tree on any public street without the general or special permission of the Commissioners.

Fine, Rs. 10.

25. *Excavations and enclosures.*—No person shall, without the general or special permission of the Commissioners, make any excavation on any public street or on or near any ghat or public ferry or enclose any such street or any part thereof.

Fine, Rs. 10; daily fine, Rs. 2.

26. *Removing turf or cutting grass.*—No person shall, without the general or special permission of the Commissioners, remove turf or cut grass from any public street or the slopes thereof.

Fine, Rs. 10.

27. *Discharge of water.*—No person shall affix or cause to be affixed to any building owned or occupied by him any gutter, spout or other thing intended for the conveyance or discharge of water or shall leave in any such building any opening for the discharge of water in such a way that the water discharged therefrom is thrown or falls upon a public street except through a downpipe or other suitable contrivance reaching to the level of the public street.

Fine, Rs. 10; daily fine, Rs. 2.

28. *Breaking in horses.*—No person shall break in horses on any public street not set apart for that purpose.

Fine, Rs. 10; on a second or subsequent conviction, Rs. 50.

29. No person shall fly a kite on any public street, or in such a way that it may fall on any public street.

Fine, Rs. 10.

30. *Playing games.*—No person shall play any game on any public street.

Fine, Rs. 10.

31. *Throwing stones or missiles.*—No person shall throw or discharge any stone or missile on or near any public street.

Fine, Rs. 10.

32. *Driving across a drain.*—No person shall drive any vehicle across a public drain in or near any public street so as to cause damage to such drain.

Fine, Rs. 10.

33. *Barbed wire.*—No owner or occupier of land abutting on any public street shall fence land with barbed wire.

Fine, Rs. 10; daily fine, Rs. 2.

34. *Dust-bins.*—No person shall—

(*a*) place any burning material in any municipal dust-bin on or near a public street, or

(*b*) burn in any such dust-bin any paper, leaves or grass, wood or other material.

Fine, Rs. 10.

35. *Closed public street.*—No person shall take or drive any motor vehicle, carriage or cart on a public street or part of a street which is closed by order of the Commissioners to all or any specified description of wheeled traffic or displace any barrier, fence or notice erected for the purpose of closing such public street or part thereof.

Fine, Rs. 10.

Regulation of the use or occupation of public streets or places for sale of articles, etc., and provision for the levy of fees for such use or occupation.

36. *Exposing articles for sale.*—Without the general or special permission of the Commissioners which may, if they so direct, be subject to the payment of fees according to a scale prescribed by them at a meeting, no person shall use or occupy any public street or any other public place for the sale of any article or for the exercise of any calling or for setting up any booth or stall.

Fine, Rs. 10; on a second or subsequent conviction, Rs. 50.

Jalpaiguri.—No. 1142M.—14th February 1935.—The following draft of two sets of by-laws, which have been framed by the Commissioners of the Jalpaiguri Municipality, in the district of Jalpaiguri, under sections 269 and 277 of the Bengal Municipal Act, 1932 (Bengal Act XV of 1932), and which the Government of Bengal (Ministry of Local Self-Government) propose to confirm under section 506 of the Act, is published for the information of persons likely to be affected thereby.

2. The draft will be taken into consideration on the 8th May 1935, and any objection or suggestion received by the undersigned through the District Magistrate and the Divisional Commissioner before that date will be duly considered :—

Draft by-laws.

By-laws under clauses (d), (e) and (f) of section 269 and under section 277, regarding privies, urinals and drains of water-carriage system.

1. Every person who desires to connect his privies or urinals with the municipal underground sewerage system shall apply to the Commissioners for written permission.

2. The application shall be in such form as may be laid down by the Commissioners and shall be accompanied by a plan in triplicate on a scale of not less than sixteen feet to an inch, showing the whole of the drains and their sizes and gradients, the levels of the ground surface in reference to a datum specified by the Commissioners, and the position of every building, house-gulley, soil pipe, waste pipe, bath, privy or urinal in the premises which it is proposed to connect with the municipal underground sewerage system.

3. The Commissioners may direct the person making the application to make such alterations or amendments in the plan as may seem to them necessary or desirable, and such person shall alter the plan accordingly, and if no such alteration or amendment is made within thirty days the application shall stand rejected.

4. When the plan has been approved, one copy shall be returned to the person making the application, signed by the Chairman, and two copies shall be retained in the municipal office.

5. Upon receipt of the approved plan and a written permission to proceed, the owner of the premises may authorise a builder or surveyor licensed under this Act to execute the work under these by-laws except such portion as lies within a public highway:

Provided that if the work is not commenced within three months from the date of the permission, such permission shall be deemed to be cancelled.

6. No person shall commence to execute any work under these by-laws before obtaining a written permission from the Commissioners to proceed with the work.

7. Every person who applies for a connection of his privy or urinal with the municipal underground sewerage system shall deposit with his application a fee for Rs.....for each such connection. If the Commissioners do not grant permission for the connection to be made within six months from the date of application, the fee deposited shall be refunded.

8. On completion of the work under these by-laws the owner or occupier of the premises shall give notice of completion to the officer authorised by the Commissioners in this behalf. When that officer has certified that the whole of the work has been done satisfactorily and in accordance with these by-laws, the connection with the municipal underground sewerage system will be made by the Commissioners.

9. No person other than a builder or surveyor licensed under this Act shall execute any work in connection with the construction of a connected privy or connected urinal and its connection with the municipal underground sewerage system.

Note.—A list of builders and surveyors licensed under this Act shall be maintained at the municipal office which shall be open to inspection at any time during regular office hours.

10. The materials used in the construction of any work executed under these by-laws shall be of such quality and description as may be laid down by the Commissioners in a standard specification to be drawn up by them, a copy of which shall be available for consultation to any person applying therefor. The Commissioners may from time to time alter this specification:

Provided that such alteration shall not apply to any work commenced before the date on which the alteration is made.

General provisions as to drains.

10A. The provisions of these by-laws except by-law 7 shall, so far as possible, apply to the construction and connection of a drain of a building or land with a municipal drain or underground sewerage system.

11. The drainage system of premises connected with municipal underground sewerage system shall, so far as is practicable, provide for the diversion of all rain-water and surface-water from the underground sewerage system to the municipal surface-water drains. With this object, the owner of the premises shall construct such intercepting gulley-pits, overflows and separate surface-water drains as he may be called upon by the Commissioners to make as a condition precedent to the grant of permission to connect the privies or urinals thereon with municipal underground sewerage system.

12. Any inlet to any drain connected with the municipal underground sewerage system must be at least one foot above the highest known flood level at such inlet.

13. No person shall discharge into any drain or overflow channel constructed for the purpose of discharging surface-water only any offensive matter, sewerage or rubbish so as to cause a nuisance or danger to health.

Pipe drains from premises.

14. All stoneware pipes shall be of a quality equal to the British standard specification, and shall be properly laid in straight lines vertically and horizontally and joined with tarred gasket and cement in conformity with the specification laid down by the Commissioners under by-law 10. Every change in direction shall be formed by properly curved pipes or channels. Such changes of direction shall, unless otherwise specially permitted by the Commissioners, be made in inspection pits.

15. All stoneware pipes shall be (*i*) laid upon a bed of good concrete as per specification of such width as may be approved by the Commissioners, and not less than six inches thick, and (*ii*) shall be covered for half its depth with concrete not less than four inches thick.

16. Except when otherwise specially permitted by the Commissioners in writing, the minimum fall of a pipe drain shall be as follows:—

Drains of four inches diameter—1 in 40.

Drains of six inches diameter—1 in 80.

Drains of nine inches diameter—1 in 150.

17. All pipe drains shall be of adequate size and in no case shall any pipe drain have a diameter of less than four inches nor more than such a size as may be specified by the Commissioners.

18. Cast-iron pipes used as drain pipes shall be properly jointed with lead and yarn and caulked to the satisfaction of the Commissioners or any person authorised by them in this behalf.

19. Whenever necessary for protection of adjoining property, all excavation for the execution of any work under these by-laws shall be properly timbered.

20. Every pipe drain shall be water-tight and shall be tested by the Commissioners or any person authorised by them in this behalf by water test. The water test shall be made to a pressure of four feet above the highest point of the drain. No pipe drain shall be used until the Commissioners or any person authorised by them in this behalf shall have certified in writing that it has passed this test.

21. Every pipe drain shall be ventilated by carrying up a vertical pipe or shaft from the upper end of the pipe drain, and such pipe or shaft to be not less than four inches in diameter and shall be fixed in such a manner as effectually to prevent any escape of foul air from such pipe into any premises in the vicinity thereof, and in no case to a height of less than ten feet.

22. Every inlet to the pipe drains not being a ventilating inlet specifically provided for that purpose shall be trapped by an efficient trap so constructed as to give a water-seal of not less than two inches.

23. All gulleys, traps, gratings, covers or other appliances shall be of patterns, sizes and qualities in accordance with patterns approved by the Commissioners and kept in the municipal office.

24. No drain shall be laid under any building except when no other form of construction is possible. If a drain is laid under a building it shall be laid in a straight line throughout and so as to leave between the top of the drain at its highest point and the surface of the ground beneath the building a distance of not less than the full diameter of the drain, and shall be constructed either of cast-iron pipes with socket and spigot joints, or else with stoneware pipes completely surrounded with cement concrete at least six inches thick all round.

Adequate means of access shall be provided at each end of such portion of the drain as is beneath the building.

25. Any pipe drain passing under a wall shall be protected at the part through the wall by an arch, reinforced concrete slab, or iron support so as, in the opinion of the Commissioners or any person authorised by them in this behalf, to be of sufficient strength to prevent any disturbance of the pipe drain caused by pressure or settlement of the wall.

26. Whenever specially required by the Commissioners, a suitable trap shall be placed in a drain at a point as near as may be practicable to the junction of the drain with the municipal underground sewerage system.

Open Drains.

27. (*1*) Every open drain constructed after these by-laws come into force or provided for a new building, for the purpose of discharging surface or sullage water, shall be constructed of brick, masonry or concrete covered with a plaster not less than half an inch in thickness and containing not less than 33 per cent. of Portland cement or any other cement approved by the Commissioners, or of natural or artificial stone or of glazed half-round pipes, and shall be of such pattern and size and laid in such a gradient as may be specified by the Commissioners.

(*2*) Whenever an open drain is connected with a pipe drain a trap shall be constructed at the end of the open drain immediately above the connection.

Such connection shall be covered by a grating of cast-iron or other suitable material.

(*3*) Whenever an open drain is connected with a municipal open drain, such connection shall be made with a proper sweeping curve to the outfall as may be approved by the Commissioners.

Maintenance.

28. The owner or occupier of any premises, a privy, urinal or drain of which is connected with the municipal underground sewerage system, shall at all times maintain in a proper state of repairs and in a sanitary condition all pipe drains, open drains, traps and fittings, appliances and apparatus connected with the drainage of the premises,

29. The owner or occupier of any such premises shall give every reasonable facility to the Commissioners or any person authorised by the Commissioners in this behalf to inspect the drains, privies, urinals, sinks, bath rooms or other buildings or apparatus connected therewith.

Closed cess-pools or household septic tanks and soak pits.

30. When any person intends to instal a privy or urinal on the water-carriage system, and there is no municipal underground sewerage system with which it may be connected, he may instal such privy or urinal on the condition that he provides a covered septic tank, and a soak pit or a disposal gallery in conformity with the provisions of by-law 36.

31. A covered septic tank shall be constructed in accordance with the type design to be kept at the municipal office, together with means for disposal of the effluent from the septic tank.

32. The septic tank shall be constructed of watertight masonry, concrete, or earthenware, and shall have a capacity of not less than two cubic feet per user, the number of users being taken as the maximum number of persons who will ordinarily use the privy or urinal connected to the septic tank.

33. The means for disposal of the effluent of the septic tank shall consist of either—

(*a*) a covered soak pit or well, the bottom of which shall be carried down to a porous sandy stratum,—in any case to a depth of not less than two feet below the lowest subsoil water level. Soak pits may be lined or unlined, depending on the nature of the upper strata. An unlined soak pit shall be between eighteen inches and two feet in diameter, and the quantity of liquid run into it shall not be more than one hundred gallons per day. A lined soak pit or well shall have a horizontal cross sectional area of not less than one square foot for every twenty-five gallons of water discharged into it daily; or

(*b*) a disposal gallery, which shall consist of pipes of not less than four inches diameter, laid open jointed in a bed of broken stone or brick at a depth of about fifteen inches below ground, and a gradient of not less than two inches per one hundred feet. The length of gallery shall be not less than a figure calculated at the rate of five feet per user when laid in porous sandy subsoil. The gallery may be in one line, or in parallel lines the distance between which is not less than six feet. When laid in heavy subsoil, the length of gallery shall be calculated at ten feet per user, and it shall be laid in two or three separate lengths fed from a junction manhole so arranged that one or more lengths can be cut off for rest.

Soak pits and disposal gallaries shall be constructed in accordance with the type plans to be kept at the municipal office.

34. The sewers connecting from the privies or urinals to the septic tanks shall be constructed of such materials and in such manner as is laid down in by-laws Nos. 14 to 26.

35. The minimum quantity of water which shall be provided for the flushing of the water-closets and urinals is five gallons per user per day.

36. No septic tank, soak pit, or disposal gallery shall be constructed in ground which is liable to flood in the rainy season, and no soak pit or gallery shall be constructed within one hundred feet (horizontal distance) from any common well or tube well which is used as a source of drinking water-supply. The general level of the pipes of a disposal gallery shall not be lower than that of the subsoil water level in the rainy season.

Bylaws under clauses (b), (c) and (f) of section 269, regarding privies and urinals of hand removal system.

1. *Plans of privies and urinals to be submitted to Commissioners.*—(*1*) Every person who intends to construct any service-privy or service-urinal or to make any substantial additions to, or alterations in, any such privy or urinal, shall send to the Commissioners an application in such form (to be supplied to the applicant free of charge) as may be laid down by the Commissioners.

(*2*) Such application shall be accompanied by—

(*a*) a site-plan in triplicate, unless the Commissioners otherwise direct, drawn to a scale of not less than twenty feet to the inch and showing all surroundings to a distance of fifty feet from the privy or urinal, and

(*b*) a detailed plan in triplicate of the privy or urinal with sections and cross-sections, drawn to a scale of four feet to the inch and showing the means of ventilation and any other particulars which may be required by the Commissioners.

2. *Power to Commissioners to refuse to sanction service-privy or service-urinal which will be nuisance.*—The Commissioners may, for reasons to be recorded by them in writing and furnished to the applicant free of charge refuse to grant permission to erect any service-privy or service-urinal which will, in their opinion, be a nuisance.

3. *Regulation of site of service-privies and service-urinals.*—(*1*) No service-privy or service-urinal exceeding eleven feet in height shall be placed in the space required by this Act to be left at the back of a building.

(2) No service-privy or service-urinal situated in, or adjacent to, a building shall be placed at a distance of less than six feet from—

(i) any public building, or

(ii) any building which is, or is likely to be, used as a dwelling-place, or kitchen, or as a place in which any person is, or is intended to be, employed in any manufacture, trade or business.

(3) No service-privy or service-urinal shall be constructed in any premises occupied by a masonry building, or, without the special sanction of the Commissioners, in any other premises which are situated in a street which has been sewered and has an adequate water-supply.

(4) Every service-privy and service-urinal shall be detached from the inhabited portion of any building.

4. *Prohibition of construction of service-privy or service-urinal on upper floor of a building.*—No service-privy or service-urinal shall be placed on any upper floor of a building.

5. *Models and type-plans.*—Models and type-plans of service-privies and urinals approved by the Commissioners, with estimates of the cost of constructing service-privies and urinals in accordance therewith, shall be kept in the municipal office, and shall be open to inspection by any person at all reasonable times without charge; but no person shall be bound to construct any service-privy or urinal in accordance with any such model or type-plan if such privy or urinal be constructed in accordance with these by-laws.

6. *Drains.*—(1) A drain shall be provided for every service-privy or service-urinal.

(2) Such drain shall be constructed of some impervious material, and shall connect the floor of the privy or urinal—

(a) with a drain communicating with a municipal sewer, or

(b) if permitted by the Commissioners, with—

(i) an impervious cesspool the contents of which can be removed by hand or by vacuum gulley pit emptying machine, or

(ii) a soak pit, as described in by-law No. 33 (a) of the model by-laws or, regarding privies, urinals and drains of water-carriage system,

(iii) a municipal drain.

7. *Floor.*—The floor of every service-privy and every service-urinal shall—

(1) be made of cement or other impervious material, or if the owner so desires, of glazed tiles, artificial stone, or glazed sanitary ware;

(2) be in every part at a height of not less than six inches above the level of the surface of the ground adjoining the privy or urinal; and

(3) be made with a fall or inclination of at least half an inch to the foot towards the drain specified in by-law 6.

8. *Walls.*—The falls and roof of every service-privy, and the walls and roof (if any) of every service-urinal, shall be made of such materials as may be approved by the Commissioners. Provided that the entire surface of the walls of a privy below the platform shall be surfaced with cement, or other materials as specified in by-law 7 (1).

9. *Platform.*—(1) The platform of every service-privy or service-urinal shall either be plastered with cement or be made of some water-tight non-absorbent material as specified in by-law 7 (1).

(2) In the case of service-privies or urinals with an outlet drain constructed in accordance with by-law 6 (2) (b) (iii), the platform must be sloped towards the aperture with an inclination of at least half an inch to the foot. In all other cases detailed in by-law 6 (2), the platform may, if so directed by the Commissioners, be sloped away from the aperture towards a drain communicating with a municipal drain or a drain connected with a municipal sewer.

10. *Ventilation.*—Every service-privy and every service-urinal situated in, or adjacent to, a building shall have an opening, of not less than three square feet in area, in one of the walls of the privy or urinal, as near the top of the wall as may be practicable and communicating directly with the open air.

11. *Construction of privies.*—(1) Every service-privy and service-urinal shall be provided with a movable receptacle for sewage.

(2) The following provisions shall have effect with regard to such privies, urinals and receptacles, namely:—

(a) the space beneath the platform of the privy or urinal shall be of such dimensions as to admit of a movable receptacle for sewage of a capacity not exceeding two cubic feet, being placed and fitted beneath the platform in such manner and position as will effectually prevent the deposit, otherwise than in such receptacle, of any sewage falling or thrown through the aperture in the platform;

(b) the privy or urinal shall be so constructed as to afford adequate access to the said space for the purposes of cleansing it and of placing therein, and removing therefrom, a proper receptacle for sewage;

(c) the said receptacle shall be water-tight, and shall be made of metal, well-tarred earthenware or glazed stoneware, and shall be of such construction and shape as the Chairman may consider suitable;

(d) the door of the opening for the insertion and removal of the said receptacle shall be so made as completely to cover the said opening.

Hooghly.—No. 1144M. — 14th February 1935.—The following draft of a set of by-laws, which has been framed by the Commissioners of the Baidyabati Municipality, in the district of Hooghly, under section 460 of the Bengal Municipal Act, 1932 (Bengal Act XV of 1932), and which the Government of Bengal (Ministry of Local Self-Government) propose to confirm under section 506 of the Act, is published for the information of persons likely to be affected thereby.

2. The draft will be taken into consideration on the 8th May 1935, and any objection or suggestion received by the undersigned through the District Magistrate and the Divisional Commissioner before that date will be duly considered :—

Draft by-laws.

By-laws regulating sarais, dharamsalas *and other lodging-houses.*

Penalties.

1. *Fine.*—The penalty for infringement of any of the following by-laws shall be—

(*a*) a fine not exceeding the sum stated at the foot of the by-law;

(*b*) in the case of a second of subsequent conviction for a similar offence, a fine not exceeding the sum (if any) stated in that behalf at the foot of the by-law.

Registration and inspection of sarais, dharamsalas *and other lodging-houses.*

2. The owner of each *sarai, dharamsala* or lodging-house shall have the same registered in the office of the Commissioners and shall specify at the time of registration the number of persons to be accommodated in each room thereof.

Fine, Rs. 10.

3. The owner or person in charge of each *sarai, dharamsala* or lodging-house shall permit the same to be inspected at any time by any officer authorised in that behalf by the Commissioners at a meeting.

Fine, Rs. 10.

Prevention of overcrowding and uncleanliness.

4. The owner or person in charge of any *sarai, dharamsala* or lodging-house shall not allow any room therein to be occupied at any time by a larger number of persons than may be provided with a floor space of not less than 25 square feet and a cubic space of not less than 250 cubic feet per adult person.

Explanation—Two children under ten years of age shall be counted as one adult person for the purpose of this by-law.

Fine, Rs. 10.

5. The owner or person in charge of a *sarai, dharamsala* or loging-house shall see that the rooms and other parts thereof and the surroundings thereof are kept clean and well-ventilated, and that proper and sufficient arrangements are made for conservancy with separate privies and urinals for the use of males and females, and for drinking water for the use of the inmates.

Fine, Rs. 10.

Precautions in the case of outbreak of infectious diseases.

6. In the event of an outbreak of any infectious or contagious disease in a *sarai, dharamsala* or lodging-house, the owner or person in charge thereof shall at once give information to the Commissioners respecting the existence of such disease.

Fine, Rs. 10; on a second or subsequent conviction, Rs. 50.

7. If any person is attacked with an infectious or contagious disease in a *sarai, dharamsala* or lodging-house, the owner or person in charge thereof shall take immediate steps for the segregation of other healthy inmates thereof and shall adopt such precautionary measures as may be directed by the Commissioners.

Fine, Rs. 10; on a second or subsequent conviction, Rs. 50.

General.

8. The owner or person in charge of a *sarai, dharamsala* or lodging-house shall not allow the same to be used for immoral purpose.

Fine, Rs. 10.

9. The owner or the person in charge of a *sarai, dharamsala* or lodging-house shall not allow a leper or other person suffering from an open sore or any loathsome or contagious disease to be employed in, or to assist in the carrying on of any business in, or to enter or occupy any portion of, such place.

Fine, Rs. 10.

CORRIGENDUM.

No. 1293L.S.-G.—16th February 1935.—In rule 41 of the local board election rules, as revised by notification No. 2898L.S.-G., dated the 5th July 1934, for the words "special seats" *substitute* the words "special electoral unit."

Medical.

Minister-in-charge: The Hon'ble Sir Bijoy Prasad Singh Roy, Kt.

Calcutta.—No. 516Medl. — 12th February 1935.—Mr. B. Randell Jennings, L.D.S., who was appointed in notification No. 816Medl., dated the 9th March 1934, to act as Dental Surgeon, Medical College Hospitals, Calcutta, during the absence on leave of Dr. E. H. Bramwells, is allowed to continue in that appointment until further orders, *vice* Dr. Bramwells, resigned.

NOTIFICATION.

No. 540Medl.—14th February 1935.—The following draft of a notification containing proposed rules under the Bengal Medical Act, 1914 (Act VI of 1914), as amended by the Bengal Medical (Amendment) Act, 1928 (Bengal Act III of 1928), is published for general information.

2. Any objection or suggestion which any person may desire to make with respect to the proposed rules should be submitted to the Government of Bengal in the Local Self-Government Department before the 1st April 1935, on or after which date the draft rules will be taken into consideration:—

Draft notification.

In exercise of the powers conferred by sub-sections (*1*) and (*2*) of section 33 of the Bengal Medical Act, 1914 (Bengal Act VI of 1914), as amended by the Bengal Medical (Amendment) Act, 1928 (Bengal Act III of 1928), the Governor in Council is pleased to make the following rules and forms in replacement of the rules and forms published with notification No. 1690Medl., dated the 5th July 1929:—

Rules.

PART I.—PRELIMINARY.

Definitions.

1. In these rules, unless there is anything repugnant in the subject or context,—

(*1*) the expression "the Act" means the Bengal Medical Act, 1914,

(*2*) "Section" means a section of the Act,

(*3*) "the President" means the President of the Council nominated under section 4,

(*4*) "Member" means a member of the Council,

(*5*) "the Registrar" means the Registrar appointed under section 14,

(*6*) "Rule" means a rule of these rules,

(*7*) "Calcutta" means—

(*i*) Calcutta as defined in Schedule I to the Calcutta Municipal Act, 1923 (Bengal Act III of 1923), with the addition of the areas referred to in clauses (*1*), (*2*) and (*3*) of that Schedule; and

(*ii*) the following municipalities, namely:—

(*a*) Bally.
(*b*) Howrah.
(*c*) Dum Dum.
(*d*) North Dum Dum.
(*e*) South Dum Dum.
(*f*) South Suburban (so far as not included in Schedule I of the Calcutta Municipal Act, 1923).
(*g*) Tollygunge.

(*8*) "Appendix" means the appendix to these rules.

PART II.—RULES UNDER SUB-SECTIONS (*1*) AND (*2*) OF SECTION 33.

Register of members.

2. A register shall be maintained in Form No. 1 in the Appendix which shall show the name and address of each member, whether he is nominated or elected; in case he is elected, the electorate which he represents, the ordinary term of office of each member, the date of its commencement and expiration, and in case the office terminates before the due date owing to vacation of seat, resignation of membership or death, the date and reason of earlier termination.

Appointment of members.

3. Sixty days before the expiration of the term of any nominated member, the Registrar shall draw the attention of the President to the approaching vacancy, and the latter shall forthwith report it to the Local Government, in order that a new appointment may be made to take effect from the day following that on which the existing appointment will expire.

4. On the occurrence of a casual vacancy in the office of a nominated member under section 9, sub-section (*1*), or on the resignation or death of such a member, or under the operation of rule 30, the Registrar shall at once draw the attention of the President to the vacancy, and the latter shall forthwith report it to the Local Government, who shall take steps to have it filled within one month by a fresh nomination under section 10.

PART III.—RULES UNDER CLAUSE (*a*) OF SUB-SECTION (*2*) OF SECTION 33 OF THE ACT.

Election of members under clauses (c) to (h) of section 4 of the Act—Special rules for election under clauses (d) and (e) of section 4.

5. The Registrar shall invite the attention of the heads of the medical institutions mentioned in clause (*d*) and clause (*e*) of section 4 to the date of expiry of the term of office of the respective members elected by their staffs not less than two and-a-half months in advance of such expiry, and inform them in case of a casual vacancy in such office as soon as conveniently may be after the occurrence of the

vacancy, and request them to fill the vacancy "by fresh election under section 4 and under these rules in ample time before the end of their term of office or within one month under section 10, as the case may be."

6. The staff of a medical college authorised to elect a member under clause (*d*) of section 4 consisting of the Principal, professors, resident physicians and surgeons and visiting physicians and surgeons holding teaching appointments in attached hospital shall at a meeting specially convened for the purpose elect one of the staff, who must be a registered practitioner, to be a member of the Council, and report the name to the President in ample time to obtain publication under section 7 in the *Calcutta Gazette* prior to the reconstitution of the Council or to the expiry of his term of office or within one month after the occurrence of a casual vacancy, as the case may be.

7. The staff of a medical institution authorised to elect a member under clause (*e*) of section 4 consisting of the Superintendent, teachers and the visiting physicians and surgeons holding teaching appointments in attached hospitals shall at a meeting specially convened for the purpose elect one of the staff, who must be a registered practitioner, to be a member of the Council, and report the name to the President in ample time to obtain publication under section 7 in the *Calcutta Gazette* prior to the reconstitution of the Council or to the expiry of his term of office or within one month after the occurrence of a casual vacancy, as the case may be.

Special rules applicable to elections under clauses (*c*), (*f*), (*g*) *and* (*h*) *of section 4.*

8. In these rules—

(*1*) "Returning Officer" means—

(*a*) for the purposes of election under clause (*c*) of section 4, the Registrar of the University of Calcutta, and includes any officer of the University deputed for the time being by the said Registrar to perform or assist him in his duties under these rules, and

(*b*) for the purposes of elections under clause (*f*), clause (*g*) and clause (*h*) of the said section 4, the Registrar, and includes any officer deputed for the time being by the said Registrar to perform or assist him in his duties under these rules.

(*2*) "Teacher" means anyone holding an independent teaching appointment in a medical institution recognised by the Council and does not include assistant, demonstrators, house physicians or house surgeons. For purpose of clauses (*f*) to (*h*) of section 4 it includes professors, teachers, visiting surgeons and visiting physicians holding a teaching appointment in hospitals attached to such medical institution.

9. The Registrar shall invite the attention of the Registrar of the Calcutta University to the date of expiry of the term of office of the member elected by the University two and-a-half months in advance of such expiry, and inform him in case of a casual vacancy in that office as soon as conveniently may be after the occurrence of the vacancy, and request him to fill the vacancy "by fresh election under section 4 and under these rules in ample time before the end of the term of office of the Council or within one month under section 10, as the case may be."

10. (*1*) As a preliminary step for the holding of each election succeeding the first elections the Returning Officer shall notify in the *Calcutta Gazette*, and in such other manner as he may think fit, all vacancies, whether ordinary or casual, with a specification of the electorate by which each outgoing or deceased member was returned and by which consequently his successor is due to be elected and of the date of expiry of the term of his office. In the case of vacancies under clause (*f*), clause (*g*) or clause (*h*) of section 4, the notification must further show whether the vacating member was elected to provide the special qualification of teacher or registered practitioner practising outside Calcutta or both such qualifications, as the case may be.

The notification shall be published in the case of—

(*a*) a general election—

on a date not being less than 42 days and more than 75 days before the day on which the term of office of the sitting members expires; and

(*b*) a casual vacancy—

as soon as conveniently may be after the occurrence of such vacancy.

10. (*2*) The Returning Officer shall *in the same* notification invite all electors concerned to obtain nomination papers from him on application to nominate qualified candidates and request all electors generally to participate in the impending elections. He shall at the same time appoint and notify dates, times and places relative to the elections as required by rule 26.

11. (*a*) The electoral rolls under clauses (*f*) to (*h*) of section 4 shall be prepared by the Registrar at each election from the Registrar of Registered Practitioners and shall contain the name, registration number, qualifications and address of every person qualified to vote for the election of a member or members to fill up the vacancy or vacancies:

Provided that at an election held to fill a casual vacancy the rolls for the electorate concerned shall alone be prepared.

N. B.—(*1*) Registered practitioners with plural qualifications under clause (*f*) and clause (*g*) should be entered in the rolls under each of these clauses, while those with such qualifications under either clause (*f*) or clause (*g*) and clause (*h*) should be entered in the rolls under either clause (*f*) or clause (*g*) as the case may warrant and excluded from the rolls under clause (*h*), *vide* Local Self-Government (Medical) No. 2113Medl., dated the 4th September 1926, and Local Self-Government (Medical) No. 398T.—Medl., dated the 11th September 1926.

N. B.—(*2*) The procedure for the preparation of electoral rolls has been modified by Government order No. 2070Medl., dated the 23rd August 1928, under which the printed medical list corrected up to a safe date is accepted as the electoral rolls.

(*b*) The electoral rolls consisting of a copy of the latest Annual Medical List corrected to the date just preceding the last date for the receipt of nomination papers shall be published at the office of the Returning Officer on the last date named, and no practitioner whose name is entered on the Register of Registered Practitioners on or after such last date shall be entitled to vote at the next succeeding elections.

12. The list of persons qualified to vote under clause (*f*) and clause (*h*) of section 4 shall each be divided into the two following parts, namely:—

Part I.—Medical practitioners practising in Calcutta.

Part II.—Medical practitioners practising outside Calcutta.

N. B.—The procedure for the preparation of electoral rolls has been modified by Government order No. 2070Medl., dated the 23rd August 1928, under which the printed medical list corrected up to a safe date is accepted as the electoral rolls.

Nomination of candidates for election.

13. (*1*) Any person whose name is included in the Register of Registered Practitioners and who is not disqualified for election to the Council under section 6 may be nominated as a candidate for election under clause (*f*), clause (*g*) or clause (*h*) of section 4 and any such person who is also a member of the Faculty of Medicine of the Calcutta University may be so nominated for election under clause (*c*) of the same section:

Provided that—

(*a*) at a general election—

(*i*) for an electorate under clause (*g*) each qualified elector may nominate a maximum number of two candidates, one of whom must be a teacher. Should he nominate more candidates than one, one of the nominees must be a teacher,

(*ii*) for an electorate under clause (*f*) and an electorate under clause (*h*) each qualified elector may nominate a maximum number of four and three candidates, respectively, of whom in each case one shall be a teacher and another a registered practitioner practising outside Calcutta.

Should a qualified elector nominate more than two candidates for the former [the electorate under clause (*f*)] and more than one candidate for the latter electorate [under clause (*h*)] in the case of a single additional nomination, it must be of a candidate who is either a teacher or a registered practitioner practising outside Calcutta, or who combines both these qualifications in himself; in the case of two additional nominations they must be of two candidates who possess in the alternative the qualification of teacher or registered practitioner practising outside Calcutta, or combine both qualifications in themselves. In the event of a single candidate thus nominated possessing both qualifications an additional qualified candidate who is neither a teacher nor a registered practitioner practising outside Calcutta may be proposed as the second nominee.

(*b*) in the case of a casual vacancy affecting a member originally elected to provide a special qualification or qualifications as teacher or registered practitioner practising outside Calcutta or both, the nominees must possess the particular qualification or either of such qualifications, as the case may be.

Should the nominations received from a qualified elector not provide for the special qualification or qualifications referred to and unless they are invalid for other reasons under rules 15 and 16, the Returning Officer shall return his nominations in favour of more candidates than one for the electorates under clause (*g*) and clause (*h*) and of more candidates than two for the electorate under clause (*f*) and invite fresh nominations made in conformity with this rule by an early specified date.

(*2*) Such nomination of each candidate shall be made in writing with complete particulars required on a separate nomination paper in Form II in the Appendix, which shall be supplied by the Returning Officer concerned on application.

(*3*) The nomination paper of each candidate nominated to represent any of the electorates mentioned in clause (*c*), clause (*f*), clause (*g*) or clause (*h*) of section 4 shall be subscribed by two qualified electors of the particular electorate concerned, by one as proposer and by the other as seconder:

Provided that no elector may subscribe, whether as proposer or seconder, more nomination papers than the number of vacancy or vacancies to be filled at the particular election by the electorate to which he belongs.

(*4*) The nomination paper shall be subscribed also by the candidate nominated as assenting to the nomination and shall be forwarded by post or otherwise to reach the Returning Officer not later than the latest date and time specified by him thereon for its return.

14. On receipt of each nomination paper the Returning Officer shall forthwith endorse thereon the date and hour of its receipt.

He shall examine the nomination papers and shall record on each paper his decision accepting or rejecting the same, and, if a nomination paper is rejected, shall state in brief his reasons for such rejection, *e.g.*, that it does not comply with the requirements of any particular rule or that it has arrived after the latest date and time fixed for the receipt of nominations.

N. B.—Temporary change of station of practice shall be disregarded.

15. If more nomination papers than are allowed by the proviso to rule 13 (*3*) be subscribed by the same elector, then only the permissible number of such nomination papers first received by the Returning Officer shall, if otherwise in order, be held to be valid, but if the Returning Officer is unable to determine the order in which such nomination papers were received by him, all of such nomination papers shall be held to be invalid.

16. Every nomination paper in respect of which any requirement of these rules has not been complied with, or which is not received by the Returning Officer on or before the latest date and time fixed for the sending in or nomination papers, shall be invalid.

Scrutiny of nomination papers.

17. (*1*) On the date and at the time and place appointed by the Returning Officer under rule 26 for the scrutiny of nomination papers, every candidate and his proposer and seconder may attend, and the

Returning Officer shall allow them to examine the nomination papers of all candidates which have been received by him and on which he has noted the result of his examination under rule 14.

(*2*) The Returning Officer shall decide all objections to his decision as well as all questions which may be raised as to the validity of any nomination, and his decision on any such question shall, subject to the provisions of rules 28 and 29, be final.

N. B.—For contingencies that necessitate the declaration of candidates as elected immediately after the scrutiny of nominations see rule 19 (*1*).

18. Any candidate may withdraw his candidature by notice in writing subscribed by him and delivered to the Returning Officer on or before 3 o'clock in the afternoon on the date succeeding that appointed for the scrutiny of nominations. A candidate who has withdrawn his candidature shall not be allowed to cancel the withdrawal or to be renominated as a candidate for the same election. The candidature of any candidate shall remain valid for all purposes of these rules unless withdrawn in accordance with this rule (*vide* notification No. 4101Medl., dated the 20th December 1929).

Election and voting.

19. (*1*) If in the case of an entire election, whether general or casual, to be held at any time under any clause of section 4 other than clause (*d*) and clause (*e*), the total number of duly nominated candidates with or without special qualifications as required by the section who stand for election or remain in the field after withdrawal of candidates before the completion of scrutiny of nomination papers does not exceed the number of members with or without the same qualifications to be elected at the time under that clause, the Returning Officer shall on the completion of such scrutiny in the presence of the candidates, their proposers and seconders forthwith declare such candidate or candidates (if duly qualified) to be elected.

Should this contingency arise as a result of withdrawal under rule 18 communicated after the scrutiny no poll shall be held for the particular electorate concerned and the fact shall forthwith be notified in the *Calcutta Gazette*, but the formal declaration of result of its election shall be held over until the date of counting of votes in respect of other electorates.

(*2*) If the number of such candidates *with or without special* qualifications exceeds the numbers *with or without the same qualifications* to be so elected, the Returning Officer shall—

(*a*) cause the names, qualifications, with any special qualifications required by section 4, registration numbers and addresses of the candidates offering for election under each such clause to be entered alphabetically in the order of their surnames in a separate voting paper in Form III in the Appendix, and

(*b*) thereupon publish in the *Calcutta Gazette* and in such other manner as he may think fit the said names, with the respective qualifications, and addresses, classified according to the clauses of section 4.

(*3*) The Returning Officer shall by a date fixed under rule 26 send by registered post to each qualified elector concerned *at his registered address* one such voting paper (and no more) of candidates for election under the clause or clauses of section 4 under which he is qualified to vote, with an indentification envelope as prescribed in these rules.

Provided that—

Such a voting paper with an identification envelope shall also be issued to such an elector (if any) to whom a voting paper has not been sent already, on his applying to the Returning Officer for the same at any time before the latest date and time appointed by him for return of voting papers. In no other case shall a voting paper be issued after the last date prescribed under rule 26 for the issue of voting papers nor shall a voting paper not delivered to a voter by the post office be re-issued to him on its return to the office of the Returning Officer.

(*4*) No election shall be invalidated by reason of the non-receipt by any elector of a voting paper.

20. Each qualified elector desirous of recording votes shall mark the voting paper issued to him with a *single* cross X (and no other mark) *in the proper column* against the name or names of the candidate or candidates (not exceeding the number of members to be elected) for whom he intends to vote (*A vote recorded otherwise than on the voting paper supplied shall not be accepted.*) No elector shall give more than one vote to any one candidate:

Provided that—

(*a*) at a general election—

(*i*) for an electorate under clause (*g*) a qualified elector may give a maximum number of two votes to two candidates, of whom one must be a teacher. Should he vote for more candidates than one, one of the candidates supported must be a teacher.

(*ii*) for an electorate under clause (*f*) and an electorate under clause (*h*) a qualified elector may give a maximum number of four and three votes, respectively, to as many candidates, of whom in each case one shall be a teacher and another a registered practitioner practising outside Calcutta.

Should an elector vote for more than two candidates for the former [the electorate under clause (*f*)] and more than one candidate for the latter electorate [under clause (*h*)] in case he records a single additional vote it must be in favour of a candidate who is either a teacher or a registered practitioner practising outside Calcutta, or who combines both these special qualifications in himself; in case he records two additional votes they must be in favour of two candidates who possess in the alternative the qualification of teacher or registered practitioner practising outside Calcutta, or combine both qualifications in themselves. In the event of a single candidate thus supported possessing both qualifications the second additional vote may be recorded in favour of a qualified candidate who is neither a teacher nor a registered practitioner practising outside Calcutta.

(*b*) in the case of a casual vacancy affecting a member originally elected to provide a special qualification or qualifications as teacher or

registered practitioner practising outside Calcutta or both, the candidate voted for must possess the particular qualification or either of such qualifications, as the case may be.

The qualified elector shall sign with full particulars the requisite declaration printed on the identification envelope received with the voting paper, place the voting paper in this envelope, close it and deliver it personally to or send it singly by post to reach the Returning Officer on or before the latest day and time fixed by him for the return of voting papers.

No voting paper will be accepted unless it is enclosed in the identification envelope supplied, and any defect, *e.g.*, any incompleteness in the entries required on the envelope or its receipt after the latest day and time fixed for its return with the proper voting paper shall invalidate both the envelope and the voting paper enclosed.

Every voting paper in respect of which any requirement of these rules has not been complied with or on which a mark is placed in such a manner as to make it doubtful to which candidate the vote is given or on which the elector has placed any mark whereby he may be afterwards identified or (on which an alteration or erasure occurs indicating a change of vote) or which is not received by the Returning Officer on or before the latest day and time fixed for the return of voting papers, shall be invalid.

Counting of votes and declaration and publication of results of election.

21. (*1*) On receiving the identification envelopes the Returning Officer shall examine them in respect of their completeness or otherwise of the particulars required to be entered thereon, and, in the case of an election under clause (*f*) or clause (*h*) of section 4, shall divide the said envelopes into two sets corresponding to the two parts of the election roll as contemplated by rule 12, and shall record his decision "rejected" on any identification envelopes which are incomplete in any requisite entry, mark thereon the incompleteness of entry and place them in safe custody for inspection at the counting of votes.

(*2*) The Returning Officer shall place the identification envelopes which are complete in requisite entries which he provisionally accepts as containing valid voting papers without opening them in ballot box for each separate electorate.

22. (*1*) The Returning Officer shall attend for the purpose of counting the votes on such date or dates and at such time and place as may be appointed by him under rule 26.

(*2*) Every candidate may be present in person or may send a representative, duly authorised by him in writing, to watch the process of counting.

(*3*) The Returning Officer shall show all identification envelopes whether accepted or rejected to the candidates or their representative for examination of the propriety of their acceptance or rejection, and dispose of any objection taken to his decision in the manner prescribed in sub-rule (*5*).

(*4*) The accepted identification envelopes will then be opened in the presence of the candidates or their representatives appearing under sub-rule (*2*) and the voting papers will be separated from their covers which will be kept aside from view and the Returning Officer will thereupon

proceed to examine the voting papers to see whether they have been filled up correctly in respect of every requisite particular, and, in the case of an election under clause (*f*) or clause (*h*) of section 4, shall divide the said voting papers into two sets corresponding to the two parts of the election roll as contemplated by rule 12. He shall record his decision "rejected" on every voting paper which is found to be defective in any respect and indicate thereon with reference to rule 20 the ground of rejection very briefly. The remaining voting papers will be deemed as accepted. Each convenient batch of voting papers, whether accepted or rejected, will be presented to the candidates or their representatives present for examination of the Returning Officer's decision.

(*5*) If, any objection is taken to his decision of acceptance or rejection of any identification envelpes or voting paper, such objection shall be decided at once by the Returning Officer, whose decision shall, subject to the provisions of rules 28 and 29, be final.

(*6*) The Returning Officer shall separate or cause to be separated the accepted voting papers from those that have been rejected and keep them in separate bundles. The identification envelopes originally rejected and those provisionally accepted when separated from their enclosed voting papers shall also be kept in separate bundles. All these bundles of voting papers and identification envelopes will be placed in safe custody for disposal under rule 24.

23. (*1*) When the counting of the votes of each electorate has been completed by the conduct of the operation on one or more days as necessary the Returning Officer shall, subject to the provisions of section 4, and of the subsequent portion of this rule, forthwith declare the duly qualified candidate or candidates, as the case may be, to whom the largest number of valid votes has been given to be elected.

(*2*) When an equality of votes is found to exist between any candidates, and the addition of a vote will entitle any of the said candidates to be declared elected, the determination of the person or persons to whom such one additional vote shall be deemed to have been given shall be made by lot to be drawn in the presence of the Returning Officer and in such manner as he may determine.

(*3*) When a candidate indicated for election under sub-rule (*1*) happens to receive the highest number of valid votes of more electorates than one, he shall be allowed to choose for which of these electorates he shall serve.

When a seat of a particular electorate remains unfilled by the operation of this sub-rule or becomes vacant by the refusal of the elected candidate to serve, such refusal being signified before his name is published in the *Calcutta Gazette*, the seat may be filled by that one among the other candidates willing to accept office who has received the highest number of votes among unsuccessful candidates of the electorate affected at the election.

The Returning Officer shall determine which candidate should be declared as elected under this sub-rule and announce the results as soon as possible after the counting of votes.

The declaration in this case may be made either in the presence of the candidates or their representatives if present or merely by notification in the *Calcutta Gazette* under rule 25.

N. B.—(*a*) To select the two candidates elected for the electorate under clause (*g*) the candidate with the requisite qualification of teacher who has secured the largest number of votes should first be declared as elected and then the candidate who has secured the largest number among the rest. To select respectively the four and three candidates elected for the electorates under clauses (*f*) and (*h*) a separate list shall be prepared for each electorate showing all candidates with an indication of special qualifications as teacher or registered practitioner practising outside Calcutta where such exist, the number of votes received by each from the registered practitioners practising within and outside Calcutta separately and the total number of such votes polled. The mufassal candidate with the largest number of mufassal votes shall first be declared as elected in each electorate and, secondly, the candidate with the special qualification of teacher who has polled the highest number of total votes and, lastly, the remaining member or members, two for the electorate under clause (*f*) and one for that under clause (*h*) shall be declared as elected with reference to the highest number of total votes polled. In the event of the first selection made as above possessing both special qualifications the remaining members three for the electorate under clause (*f*) and two for that under clause (*h*) shall be elected with reference to the largest totals of votes polled, (*vide* Government of Bengal letter No. 128T.—Medl., dated the 10th June 1922).

(*b*) Temporary changes of station of practice should be disregarded.

(*4*) Should the election fail to secure members with the requisite special qualification or qualifications required by section 4 in any case, the defect in respect of each electorate under clause (*f*), clause (*g*) and clause (*h*) should be reported for the information of the President along with any defect in the number of candidates with or without special qualification that offered for election and the want of candidates willing to accept office in circumstances contemplated in paragraph 2 of sub-rule (*3*).

24. Upon the completion of the counting of votes and after the results have been declared by him, the Returning Officer shall seal up the voting papers with their identification envelopes and all other documents relating to the election and shall retain the same for a period of six months and thereafter cause them to be destroyed.

25. The Returning Officer shall publish the names of the elected candidates in the *Calcutta Gazette*.

26. The Returning Officer shall appoint and shall notify in the *Calcutta Gazette* and in such other manner as he may think fit such date or dates or latest date, as the case may be, and, if necessary, such time and place as may be deemed suitable, for each of the following operations of an election, namely:—

(*a*) the receiving of nominations under rule 13;

(*b*) the scrutiny of nomination papers under rule 17;

(*c*) the sending of voting papers with identification envelopes under rule 19;

(*d*) the receiving of voting papers with identification envelopes under rule 20; and

(*e*) the counting of the votes under rule 22.

The dates appointed must ensure the completion of the election, in the case of a general election in ample time before the expiry of the term of office of the sitting members and, in the case of a casual vacancy under section 9 (*1*) or resulting from the death or resignation of a member or from the operation of rule 30, within the month prescribed by section 10.

General Rules for election under clauses (c) to (h) of section 4—Report of results of elections by the President to the Local Government.

27. The President shall report to the Local Government the results of all elections for action under section 7. He shall at the same time report, for action under section 5, what seats, if any, of any electorates could not be filled by election owing to defect in the number of candidates offering, or of candidates with the requisite special qualification of teacher or registered practitioner practising outside Calcutta where necessary or to want of candidates willing to accept office under rule 23 (*3*).

Finality of decisions of the Local Government.

28. The Local Government may, of its own motion or on objection made, declare any election to the Council to be void on account of corrupt practice (*e.g.*, bribery, undue influence, personation, publication of false statements) or any other sufficient cause, and may call on the electorate affected to make a fresh election within a specified date, and any decision of the Local Government under this rule shall be final.

29. The decision of the Local Government on any question that may arise as to the intention, construction or application of these rules shall be final.

Rule under section 33 (1) of the Act—Vacation of seat.

30. If a registered practitioner having been elected or nominated a member is found guilty of infamous conduct in any professional respect and his name is removed from the Register of Registered Practitioners, the Council shall, at the same time, declare his seat to be vacant.

The President shall report the fact to the Local Government and the vacancy shall be filled like a casual vacancy within one month by fresh election or nomination as the case may be, under sections 4 and 10 and these rules.

APPENDIX.

Form No. I.

(*Vide* Rule 2.)

Register showing particulars of the members of the Council.

Name.	Address.	Whether nominated or elected, and in the case of elected members, the clause of section 4 under which elected.	Term.	Date of commencement of term.	The date on which the term is to expire in ordinary course.	If the office terminates before the due date mentioned in column 6, then the date and reason of earlier termination (*See* sections 9 and 10 and rule 30).
1	2	3	4	5	6	7

Form No. II.

[*Vide* Rule 13 (*2*).]

Nomination paper.

1. Name of candidate.
2. Father's name.
3. Age.
4. Nature of qualifications registered under section 4 specifying whether he is a teacher in a recognised institution with name of the institution and registration number.
5. Address (place of residence where he practises ordinarily not his office).
6. Signature, registration number, registered qualification and address of the proposer.*
7. Signature, registration number, registered qualification and address of the seconder.*

Declaration by candidate.

I hereby declare that I agree to this nomination and that I have no intention of changing my station of practice in the near future.

Signature of the candidate.

Date.

N. B.—Nomination papers which are not received by the Returning Officer (specifying his address) before.....on the..... day of.....19.....shall be invalid.

*"Registration number" of proposer or seconder is not required in the case of nomination for election under clause (*c*) of section 4.

Back of nomination paper.

(To be filled in by the Returning Officer.)

Certificate of Delivery.

This nomination paper was delivered to me at my office at (date and hour.....)

Returning Officer.

Certificate of scrutiny.

Rejected as time-barred or for other breach of rule 13,

or

I have scrutinised the eligibility of the candidate, the proposer and seconder, and find that they are respectively qualified to stand for election, to propose and to second the nomination.

Returning Officer.

Rules 1 (*7*), 8 (*2*), 13 (*1*) (*2*) (*3*) and (*4*), 15 and 16 should be endorsed on the nomination papers.

Form No. III.

In respect of election under clause (c) of section 4.

Identification envelope.

No. (The same as the serial No. on the voting paper.)

I, A. B., the undersigned, hereby declare that I am the person to whom this voting paper was addressed, that I am a member of the Senate of the University of Calcutta and that I have not marked any other voting paper for this election.

Signature.

In respect of elections under clauses (f) to (h) of section 4.

Identification envelope.

No. (The same as the serial No. on the voting paper.)

I, C. D. [(registered qualification).....(address)] the undersigned, hereby declare that I am the person to whom the enclosed voting paper was addressed, that my name is included in the Register of Registered Practitioners and that I have not marked any other voting paper of this electorate for this election.

Signature.

N. B.—Before return of the voting paper the instructions printed on its reverse should be followed completely. If the identification envelope is partially filled up both envelope and the voting paper enclosed shall be rejected.

Form No. III.

[*Vide* Rule 19 (2) (*a*).]

Serial No.....

Voting Paper.

Subject to instructions endorsed on this paper one/two/three/four member(s) is/are to be elected to the Bengal Council of Medical Registration by the members of the Senate of the University of Calcutta or by persons whose names are entered in the Register of Registered Practitioners and who are eligible to vote for the particular electorate.

Serial numbers of candidates duly nominated.	Names, registration numbers, registered qualifications specifying whether they are teachers in institutions recognised by the Council with names of the institutions and addresses of candidates duly nominated.	Column for the voters' mark X.
1		
2		

Rejected for breach of rule 20.

Returning Officer.

Instructions.

1. Each elector has as many votes as there are members to be elected on each particular occasion (number to be specified in each case). If he does not wish to use all his votes (in the cases where more than one vote is allowed), he need not do so, but more than one vote may not be given to any one candidate.

2. (*a*) At a general election—

(*i*) for an electorate under clause (*g*) of section 4 a qualified elector may give a maximum number of two votes to two candidates, of whom one must be a teacher. Should he vote for more candidates than one, one of the candidates favoured must be a teacher.

(*ii*) For an electorate under clause (*f*) of section 4 and an electorate under clause (*h*) of section 4 a qualified elector may give a maximum number of four and three votes respectively to as many candidates, of whom one shall be a teacher and another a registered practitioner practising outside Calcutta in each case.

Should he vote for more than two candidates for the former and more than one candidate for the latter electorate, in case he records a single additional vote it must be in favour of a candidate who is either a teacher or a registered practitioner practising outside Calcutta or who combines both these special qualifications in himself, in case he records two additional votes they must be in favour of two candidates who possess in the alternative the qualification of teacher or registered practitioner practising outside Calcutta or combine both qualifications in themselves. In the event of a single candidate thus supported possessing both qualifications the second additional vote may be recorded in favour of a qualified candidate who is neither a teacher nor a registered practitioner practising outside Calcutta.

(*b*) In the case of a casual vacancy arising out of a casualty affecting a member originally elected to provide a special qualification or qualifications as teacher or registered practitioner practising outside Calcutta or both, the vote cast must be in favour of a candidate who possesses the particular qualification or either of such qualifications, as the case may be.

3. He shall vote by placing *in the proper column of the voting* paper a *single* mark X (and no other mark) opposite to the name or names of the candidate or candidates (not exceeding the number of members to be elected) whom he prefers. A vote recorded otherwise than on the voting paper shall be invalid.

The voting paper shall be invalid if the mark X is placed opposite to the name of more candidates than are to be elected, or if the mark denoting any vote is so placed as to render it doubtful to which candidate such vote is intended to apply or if more votes than one are recorded in favour of a single candidate.

4. Each qualified elector shall sign the requisite declaration giving full particulars required on the identification envelope, place the voting paper in this envelope, close it and return it in the manner prescribed in instruction 6. Without such signature and entry the identification envelope as also the enclosed voting paper shall be invalid.

5. A voting paper on which the voter has placed any mark whereby he may be afterwards identified shall be invalid.

6. Each voting paper enclosed in its identification envelope shall singly and separately be delivered personally (a voting paper sent by a peon or any other messenger will be rejected) or sent by post to the Returning Officer at the office of the Council at..... The date appointed for the commencement (to be specified separately for each electorate) of the counting of votes is..... A voting paper enclosed in its identification envelope which is not received by the Returning Officer before.....on the.....day of.....19..... will be rejected.

N. B.—The form will be simplified for the convenience of electors by excision of irrelevant words in each case, *e.g.*, by deletion of instructions regarding general election in the case of a bye-election and *vice-versa*.

Extract from rule 20 of the election rules.

* * * * * * *

No voting paper will be accepted unless it is enclosed in the identification envelope supplied and any defect, *e.g.*, any incompleteness in the entries required on the envelope or its receipt after the latest day and time fixed for its return with the proper voting paper shall invalidate both the envelope and the voting paper enclosed. Every voting paper in respect of which any requirement of these rules (main relevant provisions embodied in the instructions) has not been complied with * * * shall be invalid.

G. S. DUTT,
Secy. to the Govt. of Bengal.

Public Health.

NOTIFICATIONS.

No. 418P.H.—18th February 1935.—In exercise of the power conferred by clause (*p*) of sub-section (*1*) of section 6 of the Indian Ports Act, 1908 (XV of 1908), the Governor in Council is pleased to make the following rules for the prevention of the conveyance of infection or contagion from small-pox by means of any vessel sailing from any port in the Presidency of Fort William in Bengal subject to the said Act:—

Rules.

1. Any person sailing by a vessel, whether as a passenger or as a member of the crew, from any port in the Presidency of Fort William in Bengal subject to the Indian Ports Act, 1908, to any port outside India may, at the discretion of the Port Health Officer, be required before sailing to satisfy him that he has been vaccinated or re-vaccinated against small-pox not less than twelve days and not more than three years before the date of sailing or that he has scars proving a previous attack of small-pox:

Provided that for a period not exceeding six months from the date of this notification the Port Health Officer may, at his discretion, permit any such person to embark, although he has not been vaccinated or re-vaccinated within the period mentioned in this rule if such person allows himself to be vaccinated or re-vaccinated by the Port Health staff or produces evidence to the satisfaction of the Port Health Officer that he has been vaccinated or re-vaccinated within the twelve days immediately preceding the date of sailing.

2. An onward bound passenger and any member of the crew of a through ship may, at the discretion of the Port Health Officer, be required to satisfy him, before being permitted to land, that he has been vaccinated or re-vaccinated not less than twelve days and not more than three years before the date fixed for the departure of the vessel or that he has scars proving a previous attack of small-pox:

Provided that, for a period not exceeding six months from the date of this notification, the Port Health Officer may, at his discretion, permit any such passenger or member of the crew to land although he has not been vaccinated or re-vaccinated within the period mentioned in this rule if such passenger or member allows himself to be vaccinated or re-vaccinated by the Port Health staff or if he produces evidence to the satisfaction of the Port Health Officer that he has been vaccinated or re-vaccinated within the twelve days immediately preceding the date of arrival of the ship in port.

3. The Port Health Officer shall vaccinate or cause to be vaccinated any person on board or boarding any such vessel who wishes to be vaccinated by the Port Health staff on payment of the following charges:—

(*a*) in the case of members of the crew—Annas eight for each person vaccinated.

(*b*) in the case of passengers—

(*i*) if the vessel carries a medical officer—Such charges as are laid down by shipping companies for the guidance of ships' surgeons;

(*ii*) if the vessel does not carry a medical officer—Annas eight for each person vaccinated.

Minister-in-charge: The Hon'ble Sir Bijoy Prasad Singh Roy, Kt.

No. 428P.H.—18th February 1935.—Babu Shambhu Nath Banerji, B.A., is confirmed in the post of Publicity Superintendent, Bengal Public Health Department, with effect from the 27th April 1934.

H. R. WILKINSON,
Secy. to the Govt. of Bengal.

Orders by the Director of Public Health, Bengal.

No. 1998A.—14th February 1935. — Babu Sarat Kumar Banarji, Assistant Analyst, Calcutta Public Health Laboratory, has been granted leave on average pay for a period of twenty-five days, with effect from the 18th February 1935, under article 81 (*b*) (*ii*) of the Fundamental Rules.

No. 2002A.—14th February 1935. — Babu Tarak Nath Sen Gupta, Assistant Analyst, Public Health Laboratory, Calcutta, has been granted leave on average pay for a period of eighteen days, with effect from the 11th February 1935, under article 81 (*b*) (*ii*) of the Fundamental Rules.

No. 2072A.—16th February 1935.—Babu Haradhan Mukharji, Assistant Analyst, Calcutta Public Health Laboratory, has been granted leave on average pay for a period of one month and sixteen days, with effect from the 13th February 1935, under article 81 (*b*) (*ii*) of the Fundamental Rules.

R. B. KHAMBATA,
Director of Public Health, Bengal.

EDUCATION DEPARTMENT.

NOTIFICATIONS.

No. 582Edn.—12th February 1935. — His Excellency the Chancellor of the Dacca University is pleased to grant Mr. A. F. Rahman, M.A. (Oxon.), Vice-Chancellor of the University, leave for the period from the 18th February to the 2nd March 1935 (both days inclusive).

No. 600Edn.—14th February 1935. — In exercise of the power conferred by section 6, sub-section (*3*), of the Indian Universities Act, 1904 (VIII of 1904), as amended by the Calcutta University Act, 1921 (VII of 1921), His Excellency the Chancellor of the Calcutta University is pleased to approve the election, by the Faculty of Medicine, of Lt.-Col. R. N. Chopra, C.I.E., M.A., M.D., I.M.S., as an Ordinary Fellow of the University with effect from the 31st March 1935.

Minister-in-charge: The Hon'ble Khan Bahadur M. Azizul Haque.

Dacca.—No. 682Edn.—18th February 1935. —In pursuance of the provisions of section 9 of the Bengal (Rural) Primary Education Act, 1930 (Bengal Act VII of 1930), the names of the members of the District School Board of Dacca appointed and elected under section 6 of the said Act, are published for general information:—

The District Magistrate (*ex-officio*).

The Subdivisional Magistrate of the Sadar subdivision (*ex-officio*).

The Subdivisional Magistrate of the Narayanganj subdivision (*ex-officio*).

The Subdivisional Magistrate of the Manikganj subdivision (*ex-officio*).

The Subdivisional Magistrate of the Munshiganj subdivision (*ex-officio*).

The District Inspector of Schools (*ex-officio*).

The Chirman of the Sadar local board (*ex-officio*).

The Chairman of the Narayanganj local board (*ex-officio*).

The Chairman of the Manikganj local board (*ex-officio*).

The Chairman of the Munshiganj local board (*ex-officio*).

The Chairman of the district board, Dacca (*ex-officio*).

The Vice-Chairman of the district board, Dacca (*ex-officio*).

Names of members elected under clause (f).

Mr. S. A. Salim.

Maulvi Abdul Latif Biswas.

Maulvi Kafiluddin Chaudhury.

Rai Keshab Chandra Banerji Bahadur.

Names of members elected under clause (g).

Kazi Abdur Rashid, B.A., for the Narayanganj subdivision.

Maulvi Aulad Hussein for the Manikganj subdivision.

Babu Bhudeb Banerji, B.A., B.T., for the Munshiganj subdivision.

Maulvi Haji Mukshud Ali for the Sadar subdivision.

Names of members appointed under clause (h).

Babu Basanta Kumar Sarkar (Sreenagar thana).

The Rev. Brother Walter, C.S.C., Inspector of Roman Catholic Schools.

Babu Mahendra Nath Roy (Khodadia, police-station Kapasia).

Maulvi Fuzlur Rahman, M.A., B.L., 1/A, Babur Bazar, Dacca.

Name of member appointed under clause (i).

Maulvi Montazuddin Ahmed, Teacher, Nalbunia Kandi Maktab, Munshiganj subdivision.

Charitable Endowments Act, 1890.

No. 371Edn. — 25th January 1935. — WHEREAS by a notification No. 1620Edn., dated 1st November 1919, certain lands buildings furniture fittings and equipment therein described and now also set forth in Part I of the first Schedule hereto, and certain securities in Part II of the first Schedule to the said notification described were vested in the Treasurer of Charitable Endowments for the territories subject to the Government of Bengal, upon trust to permit the said premises and effects and the income of the said securities to be used for the endowment and maintenance of a permanent Fund for the upkeep of the High English School known as "The Mahesh Narayan Academy at Lalgola," in accordance with the terms of the scheme of management, the particulars whereof were set forth in the said notification, such endowment being called "The Rao Mahesh Narayan Roy Charitable Endowment."

AND WHEREAS by two further notifications Nos. 270Edn., and 1934Edn., dated respectively 4th February 1921 and 18th June 1926, certain further securities therein described were vested in the said Treasurer of Charitable Endowments as additions to the said endowment.

AND WHEREAS at various times in the years 1923, 1926 and 1933, certain investments of the Fund set out in Part II of the first Schedule to the hereinbefore recited notification No. 1620Edn., dated 1st November 1919, were reinvested or converted.

AND WHEREAS as a result of such additions to the said endowment as were accorded permission and sanction by the hereinbefore recited notifications, namely, notification No. 270Edn., dated 4th February 1921 and notification No. 1934Edn., dated 18th June 1926, and by reason of the reinvestment and conversion which has as hereinbefore stated from time to time been effected, the said Endowment Fund now consists of the securities set out in Part II of the first Schedule hereto.

AND WHEREAS by the said notification No. 1934Edn., dated 18th June 1926, the original scheme set out in the second Schedule to the hereinbefore recited notification

No. 1620Edn., dated 1st November 1919, was modified by the addition of two clauses Nos. 17 and 18, details whereof are set out in the Schedule to the said notification.

NOW IT IS HEREBY NOTIFIED that the Government of Bengal (Ministry of Education) in exercise of the powers conferred by section 5(*3*) of the Charitable Endowments Act, No. VI of 1890, and upon the application of the Committee appointed for the management of the said Endowment and with the concurrence of the donor, doth hereby order and direct that the scheme of management set out in the hereinbefore recited notification No. 1620Edn., dated 1st November 1919 as modified by the addition of clauses 17 and 18, in accordance with notification No. 1934Edn., dated 18th June 1926, shall henceforth be further modified and consolidated in the form of the scheme set forth in the second Schedule hereto.

AND DOTH HEREBY FURTHER ORDER AND DIRECT that the said Rao Mahesh Narayan Roy Endowment Fund and the lands buildings furniture fittings and equipment, details whereof are set out in Part I of the first Schedule hereto, as also the securities comprised in the said Endowment and hereafter described in Part II of the first Schedule hereto, shall henceforth be used and administered in accordance with the terms of the consolidated scheme of management, particulars whereof are set forth in the second Schedule hereunder written.

The First Schedule above referred to.

PART I.

A. Two plots of land in mauza Srimantapur, pargana Islampur, thana Lalgola, bearing tauzi No. 432 of the Murshidabad Collectorate:—

(1) Plot of land containing the school premises:—

Area.—Five bighas 9 cottahs and 13 chittaks.

Boundaries.—Bounded on the east by khas tank, north by Thakurbari compound, west by the public library compound and the land reserved for the proposed technical school, and south by the pucca main road.

Buildings.—Two large blocks and two small ones for the school purposes.

(2) Plot of land containing the hostel buildings and a tank:—

Area.—Five bighas 11 cottahs and 4 chittaks.

Boundaries.—Bounded on the east by khas land, north by pucca main road, west by embankment of a khas tank, and south by khas land.

Buildings.—The Hindu hostel buildings containing three blocks and the Moslem hostel buildings containing two.

B. The furniture, fittings and equipment of the said school, including books in the school library, particulars whereof are set forth in a list supplied to Government by the donor.

PART II.

Securities.

		Rs.
3½ per cent., Loan, 1865	..	1,19,000
3½ per cent., Loan, 1900-01	..	1,100
3½ per cent., Loan, 1842-43	..	600
3½ per cent., Loan, 1854-55	..	600
4 per cent., Loan, 1960-70	..	16,400
5 per cent., Loan, 1939-44	..	3,100
		1,40,800

The Second Schedule above referred to.

Scheme.

1. The said endowment is called the Rao Mahesh Narayan Roy Fund in memory of the father of the donor.

2. The objects of the endowment are to maintain the High English School founded by the donor at Lalgola in Bengal and known as

the Mahesh Narayan Academy, and to provide scholarships for students from the said school passing the Matriculation Examination of the Calcutta University in the First Division, but not obtaining Government scholarship.

3. The fund is and shall be administered by a committee appointed as hereinafter mentioned, of whom the District Magistrate of Murshidabad and the Subdivisional Officer of Lalbagh Subdivision and the District Inspector of Schools, Murshidabad, for the time being shall be *ex-officio* members, and the District Magistrate is and shall be President and the Subdivisional Officer is and shall be Secretary.

There are and shall be six other members (hereinafter called "Non-official members").

The present committee consists of the following:—

Ex-officio members.

1. The District Magistrate of Murshidabad (President).

2. The Subdivisional Officer of Lalbagh (Secretary).

3. The District Inspector of Schools, Murshidabad.

Non-official members.

4. Kumar Dhirendra Narayan Roy of Lalgola.

5. Babu Hemlal Chacrabartty, L.M.F. (Doctor in charge of the Lalgola Charitable Dispensary).

6. Babu Barada Charan Majumder, B.A. (Headmaster of the school).

7. Babu Upendra Nath Audhicary (assistant teacher).

8. Babu Manindra Narayan Roy, M.A., of Lalgola.

9. Babu Nagendra Narayan Roy, B.L.

Any non-official member may retire at any time, and in the event of the death or retirement of any non-official member the vacancy shall be filled up as follows:—

Member No. 4 shall be elected by the members of the donor's family.

Members Nos. 5 and 6 shall be the doctor in charge of the Lalgola dispensary and the Headmaster of the school, respectively, for the time being and upon either of them ceasing to hold his respective post he shall forthwith cease to be a member of the committee and his successors in the respective post shall, respectively, become a member in his place. Member No. 7 shall be such one of the assistant teachers in the school as those teachers shall themselves select. Members Nos. 8 and 9 shall be gentlemen selected every three years by the parents or guardians of pupils of the school subject to the approval of the District Magistrate, Murshidabad.

In the event of the persons or body entitled to elect any member not being able to agree upon the member to be elected, the remaining members of the committee may summon a meeting of those persons whom they consider to be entitled to elect the member and the person selected by a majority of votes at such meeting shall be the member elected.

In the event of no person being found willing to fill any such vacancy as aforesaid, or if no member shall be elected to fill any such vacancy for a period of three months, the remaining members of the committee may themselves elect any other person to fill such vacancy and in the meantime such remaining members shall continue to act and be entitled to exercise all the powers of the committee.

In all questions whatsoever coming before the committee in which there shall be any difference of opinion the matter shall be decided by a majority of votes, and in case of equal votes the President shall have a casting vote.

4. The premises described in Part I of the first Schedule above written may be used for the purposes of the said school and the income of the securities mentioned in Part II of the said first Schedule together with any other income accruing from school-fees, subscriptions and donations and grants by Government shall be applied in maintaining the said school and in providing the said scholarships in manner hereinafter appearing.

5. The said school is and shall be open to the children of the locality without distinction of race or creed and shall continue to be a private school. It is and shall be conducted as a high English school so far as funds shall permit in accordance with the regulations for the time being of the Education Department of the Government of Bengal. The school shall be a day school with hostels attached.

6. Out of the income of the said fund, there shall be set apart two scholarships each of Rs. 10 monthly and eight scholarships each of Rs. 6 monthly to be awarded as hereinafter mentioned and in the event of any scholarships

not being awarded or being forfeited or ceasing by reason of death of the recipient the income which would otherwise have been expended on such scholarships may be expended for the general purposes of the school, as the committee shall direct.

The remaining income of the said fund and of any additions thereto shall be applied in the upkeep and maintenance of the school with the hostels and the school library, and to such income shall be added all school fees, donations, subscriptions, grants and income from any other sources.

7. The committee may appoint, discharge or dismiss the Headmaster of the school and any other masters and members of the staff or may delegate to the Headmaster the power of appointing, discharging or dismissing the other masters and members of the staff, subject to such conditions as to the committee may seem fit. The remuneration of the Headmaster shall be fixed by the committee and the remuneration of other masters and members of the staff may be fixed by the committee or the power to fix such remuneration may be delegated by them to the Headmaster, provided always that neither the Headmaster nor any assistant master shall be present as a member of the committee or vote at any meeting at which the appointment, re-appointment, discharge or dismissal of a Headmaster is discussed nor shall any assistant master be present as a member of the committee or vote at any meeting at which his own re-appointment, discharge or dismissal is discussed.

8. Subject to the control of the committee and to the aforesaid regulations of the Education Department, the Headmaster shall have control of the admission or non-admission of students, the selection from the lists approved by the said Education Department of the books to be used in the school, the methods of teaching, the arrangement of classes and school hours, and generally the whole internal organisation, management and discipline to be maintained in the school and hostels, including the power of expelling students from the school and hostels or suspending them from attendance.

9. The committee shall from time to time fix the scale of fees and charges to be paid by students attending the school, including those residing in the hostels.

10. The committee may direct the treasurer to set apart any portion of the income (other than the scholarships income) for a reserve fund for renewal or replacement of any buildings or equipment, and also for repairs.

11. The number of masters to be engaged for the tutorial staff and the number of attendants to be employed shall be decided by the committee as also the sums to be expended on books, furniture, equipment, prizes and other expenditure according to the income available.

12. All persons to whom the expenditure of any income or funds is delegated by the committee shall keep and shall submit proper accounts and vouchers of their receipts and expenditure, and the committee shall keep proper accounts and vouchers of the general receipts and expenditure which shall at all times be open to the inspection of the local Government or any officer authorized by them and to inspection by the donor.

13. The committee may from time to time frame rules for the management of the said school and for the conduct of the business of the said committee provided that such rules shall not be inconsistent with any of the provisions of the scheme.

14. Out of the income of the said fund there shall be set apart as from the time hereinafter mentioned two scholarships to be called the Abhaya Sundari Debi Scholarship each of Rs. 10 monthly tenable for two years and eight scholarships to be called the Mahesh Narayan Roy Scholarship each of Rs. 6 monthly tenable for two years.

15. The said scholarships shall be awarded as follows:—

Every year out of those pupils from the school who shall pass the Matriculation Examination of the Calcutta University in the First Division but shall not obtain any Government scholarships and who prosecute their studies in the Krishnath College, Berhampore, or if they apply to the Headmaster within thirty days of the publishing of the results in the *Calcutta Gazette* in any other institution approved by the committee these ten who shall obtain the highest marks in the said examination shall receive ten scholarships, the two obtaining highest marks receiving Abhaya Sundari Debi Scholarships of Rs. 10 each monthly and the next eight receiving Mahesh Narayan Roy Scholarships of Rs. 6 each monthly, all tenable for two years only and commencing on the first day of the month after the result of the said examination is published. The scholarships shall be paid over in such manner and at such place and times as the committee shall direct. A scholarship shall cease on the death of any recipient and may be forfeited by the committee in case of bad behaviour or unsatisfactory progress or if the recipient gives up his studies. The decision of the committee as to whether there has been any bad behaviour or unsatisfactory progress or giving up of studies shall be final.

16. In the event of the said school ceasing for any reason to be carried on, all lands and buildings and 3½ per cent. securities of the nominal value of Rs. 23,400 or other securities into which the same may have been converted shall revert to the donor and the remaining securities shall be utilised for the purpose of improving the sanitation of the district of Murshidabad in accordance with a scheme to be settled by the local Government and may involve the expenditure of either capital or income or both.

ERRATUM.

Minister-in-charge: The Hon'ble Khan Bahadur M. Azizul Haque.

No. 672Edn.—16th February 1935.—In lines 1-2 of rule 2 of the rules made under section 66 (*2*) (*k*) of the Bengal (Rural) Primary Education Act, 1930 (Bengal Act VII of 1930), regarding the amount and manner of payment of travelling allowances under section 13 of the said Act, and published under notification No. 148Edn., dated 14th January 1935, at page 53, Part I of the *Calcutta Gazette*, dated the 17th January 1935, *omit* the words "and menial servants."

Registration.

NOTIFICATIONS.

Minister-in-charge: The Hon'ble Khan Bahadur M. Azizul Haque.

Dinajpur.—No. 173Regn.—16th February 1935.—Babu Radha Ranjan Ray, District Sub-Registrar of Dinajpur, is allowed leave on average pay from the date on which he is relieved up to the 19th April 1935, under rule 81 (*b*) (*ii*) of the Fundamental Rules.

This cancels the orders in notification No. 94Regn., dated the 18th January 1935.

Khulna. — No. 176Regn.—16th February 1935.—Maulvi Saleh Ahmed, District Sub-Registrar of Khulna, is allowed leave on average pay for seven days, with effect from the 6th January 1935, under rule 81 (*b*) (*ii*) of the Fundamental Rules, in extension of the leave already granted to him.

Noakhali.—No. 179Regn.—16th February 1935.—In exercise of the power conferred by section 3 of the Bengal Muhammadan Marriages and Divorces Registration Act, 1876 (Bengal Act I of 1876), the Government of Bengal (Ministry of Education) are pleased to appoint Maulvi Mutiur Rahman temporarily to be a Muhammadan Registrar within the police-station of Ramgati, in the district of Noakhali, during the absence, on leave, of Maulvi Din Muhammad, or until further orders.

Noakhali.—No. 180Regn.—16th February 1935.—In exercise of the power conferred by section 2 of the Kazis' Act, 1880 (Act XII of 1880), the Government of Bengal (Ministry of Education) are pleased to appoint Maulvi Mutiur Rahman temporarily to be the Kazi for the celebration of marriages and the performance of other rites and ceremonies within the police-station of Ramgati, in the district of Noakhali, during the absence, on leave, of Maulvi Din Muhammad, or until further orders.

Jessore-Dinajpur.—No. 186Regn. — 18th February 1935.—Babu Amulya Kumar Gupta, Sub-Registrar of Bongaon, in the district of Jessore, is appointed to act as District Sub-Registrar of Dinajpur, with effect from the date on which he joins the appointment, *vice* Babu Radha Ranjan Ray, on leave preparatory to retirement.

No. 189Regn.—18th February 1935. — Maulvi Nurul Haq, a District Sub-Registrar, is allowed leave on average pay for the period from the 1st to the 28th February 1935, under rule 81 (*b*) (*ii*) of the Fundamental Rules, in extension of the leave already granted to him.

H. R. WILKINSON,

Secy. to the Govt. of Bengal.

Orders by the Inspector-General of Registration, Bengal.

24-Parganas. — No. 51. — 13th February 1935.—Babu Sudhir Kumar Biswas, Sub-Registrar attached to Alipore, in the district of the 24-Parganas, is allowed leave on average pay for fifteen days, under rule 81 (*b*) (*ii*) of the Fundamental Rules, in extension of the leave granted to him in this department notification No. 633, dated the 18th December 1934.

Jessore.—No. 52.—13th February 1935.—Maulvi Badiuzzaman, Sub-Registrar attached to Jessore, is allowed leave on average pay for twenty-seven days, under rule 81 (*b*) (*ii*) of the Fundamental Rules, in extension of the leave granted to him in this department notification No. 175, dated the 1st December 1934.

Mymensingh-Bogra.— No. 53.—14th February 1935.—Babu Radhaballav Banik, formerly Sub-Registrar of Kalihati, in the district of Mymensingh, under orders of transfer to Khetlal, in the district of Bogra, is allowed leave on average pay for one month, under rule 81 (*b*) (*ii*) of the Fundamental Rules, in extension of the leave granted to him in this department notification No. 43, dated the 5th February 1935.

Noakhali.—No. 54.—14th February 1935.—Maulvi Mukhlisur Rahman, Sub-Registrar of Chhagalnaia, in the district of Noakhali, is allowed leave on average pay for one month and nine days, under rule 81 (*b*) (*ii*) of the Fundamental Rules, in extension of the leave granted to him in this department notification No. 625, dated the 17th December 1934.

Mymensingh-Jalpaiguri-Rangpur.—No. 55.—14th February 1935. — Babu Surendra Chandra Chakrabutti, Sub-Registrar attached to Mymensingh, officiating at Debiganj, in the district of Jalpaiguri, is posted, on the termination of the officiating appointment at Debiganj, to the headquarters station of the district of Rangpur.

Faridpur.—No. 56.—14th February 1935.—Maulvi Abdul Khaleq Khan, Joint Sub-Registrar of Muksudpur at Kasiani, in the district of Faridpur, is allowed leave on average pay for eleven days, under rule 81 (*b*) (*ii*) of the Fundamental Rules, in extension of the leave granted to him in this department notification No. 632, dated the 18th December 1934.

S. AHMED,
Inspector-General of Regn., Bengal.

FINANCE DEPARTMENT.

Finance.

No. 1257F.—16th February 1935. — The following corrections, which have been authorised, are published for general information:—

CORRIGENDA.

Fundamental and Subsidiary Rules, 1st edition (Reprint).

Page 172—S. R. 284 as corrected by correction slip No. 229, dated 24th May 1932.—Under clause (*c*) *insert* the following as a note:—

Note.—Sundays intervening the gazetted holidays, which are counted against leave admissible to piece-workers, need not be treated as leave and paid for under this clause.

Bengal Financial Rules, 1st edition (Reprint), 1930.

Page 23—Rule 40.—Substitute the following for note 1:—

Ordinarily ministerial and other Government servants, who are required to give security to Government against loss through dishonesty, negligence or disregard of rules, should deposit the whole amount of the security on appointment or bind themselves by two sureties for the whole amount and agree to monthly deductions of 25 per cent. of their pay. As an alternative to this rule the following procedure may be adopted in the case of all securities of Rs. 500 or less:—

(*1*) The Government servant may give a fidelity bond of an Insurance Company approved by Government for the full amount of the required security guaranteeing Government against losses through dishonesty, negligence or disregard of the rules on the part of the Government servant.

(*2*) Deductions will then be made at the rate of 10 per cent. of the Government servants' salary, the fidelity bond to be cancelled only after the full amount of the security bond has been deposited in cash.

(*3*) Government servants in charge of offices will be responsible for seeing that fidelity bonds, which expire before the full amount of security has been recovered by deduction from salaries, are renewed in good time so as to cover the outstanding amounts.

Substitute the following for note 2:—

Fidelity bonds with the firms noted below may be accepted, subject to the form of the bond in individual cases being accepted by heads of departments in consultation with law officer when necessary:—

(*1*) Messrs. Gillanders, Arbuthnot & Co., Managing Agents of the Clive Insurance Co., Ltd., Calcutta (Gillanders House, Calcutta).

(*2*) General Accident, Fire & Life Assurance Corporation, Ltd., Bombay.

(*3*) Messrs. Martin & Co., Managing Agents, the National Indian Life Insurance Co., Ltd., Calcutta.

(*4*) The Ocean Accident and Guarantee Corporation, Ltd.

Add the following as notes 3 and 4:—

Note 3.—The security of Government servants of 20 years' pensionable service or upwards may, however, be diminished by a sum calculated on their monthly pay, multiplied by 25, with the proviso that the security will in no case be diminished by more than one-half.

Note 4.—When a Government servant who has furnished security takes leave or is deputed to other duty for not more than six months, he should ordinarily be required to stand surety for the Government servant appointed to act for him to the extent of his own security or for the difference between the security offered by the acting incumbent and that prescribed for the appointment. If, however, in special circumstances the permanent incumbent is unable to do so, the Government servant acting for him must furnish the full amount of the security, or, at the discretion of the head of the office, half the amount in cash and the rest in fidelity bonds. Security to the full amount should always be taken when the acting appointment is made for more than six months.

Provided further that if a Government servant holding substantively a post in which no security is demanded is appointed for a period not exceeding three months to a post in which security is required, the head of the office may permit him to furnish security for a reduced amount or, when the security required does not exceed Rs. 500, may, for special reasons to be recorded, exempt him from furnishing any security.

Separate Revenue.

NOTIFICATION.

No. 113S.R.—13th February 1935.—In exercise of the power conferred by section 2, sub-section 9, clause (*b*) of the Indian Stamp Act, 1899 (II of 1899), the Governor in Council is pleased to appoint Khan Sahib Quazi Muhammad Mahiuddin, Deputy Collector, to be a "Collector" for the purposes of sections 16, 18, 31, 32, 38, 39, 40, 41, 42, 48, 49, 50, 52, 53, 54, 56 and 73 of that Act in the district of Chittagong.

Miscellaneous.

NOTIFICATION.

No. 720Mis.—12th February 1935.—Under section 25 of the Negotiable Instruments Act, XXVI of 1881, the Governor in Council is pleased to declare Monday and Tuesday, the 6th and 7th May 1935, to be public holidays in celebration of the Silver Jubilee of His Majesty the King-Emperor.

D. GLADDING,

Secy. to the Govt. of Bengal.

MARINE DEPARTMENT.

NOTIFICATION.

No. 5Mne.—14th February 1935.—It is hereby notified under the provisions of section 6 of the Calcutta Port Act, 1890, that Mr. J. Reid Kay of Messrs. James Finlay and Company, Limited, whose term of office as a Commissioner for the port of Calcutta expired on the 31st January 1935, has been re-elected by the Bengal Chamber of Commerce to be a Commissioner for the port of Calcutta.

D. GLADDING,

Secy. to the Govt. of Bengal.

PUBLIC WORKS DEPARTMENT.

Establishment.

NOTIFICATION.

Minister-in-charge: The Hon'ble Nawab K. G. M. Faroqui, Khan Bahadur.

No. 135.—11th February 1935.—Babu Amal Chandra Sen, Assistant Engineer and officiating Executive Engineer, Bakarganj Division, is, on being relieved by Babu Jogendra Kumar Guha, Assistant Engineer, transferred, in the interests of the public service, to the Dacca Division.

J. D. V. HODGE,

Secy. to the Govt. of Bengal.

IRRIGATION DEPARTMENT.

Establishment.

NOTIFICATIONS.

No. 5-C.I.E.—11th February 1935. — This office notification No. 4-C.I.E., dated the 26th January 1935, granting leave on average pay for four months to Babu Bhuban Mohan Mukherjee, Assistant Engineer, is hereby cancelled.

No. 6-C.I.E.—11th February 1935.—Babu Bhuban Mohan Mukherji, Assistant Engineer, is transferred, in the interests of the public service, from the South-Western Circle to the Canals Division.

No. 7-C.I.E.—11th February 1935.—Babu Bijoy Kumar Basu, Assistant Engineer, is transferred, in the interests of the public service, from the Canals Division to the Dredger Division.

T. A. CURRY, *Chief Engineer.*

DEPARTMENT OF AGRICULTURE AND INDUSTRIES.

Industries.

RESOLUTION—No. 906IND.

Calcutta, the 14th February 1935.

Minister-in-charge: The Hon'ble Nawab K. G. M. Faroqui, Khan Bahadur.

Read an application, dated the 12th June 1934, from Babu Sudhansu Kumar Munshi of 1A, Haralal De Street, Entally, Calcutta, asking for an advance under section 19 (*1*) (*h*) of the Bengal State Aid to Industries Act, 1931 (Bengal Act III of 1931), for the hire purchase of Ghosh's spinning plant with A.C. motors for the purpose of starting a small cotton yarn spinning factory at Narayanganj, Dacca.

Read also resolutions of the meetings of the Board of Industries, Bengal, held on the 4th July 1934 and 10th September 1934 and the report submitted with letter No. 17478G., dated the 24th November 1934, from the Secretary to the Board.

Order.—Ordered that the advance of Rs. 9,000 asked for be sanctioned provided that the applicant deposits to the credit of Government 20 per cent of the cost of the machinery, viz., Rs. 1,800 (which will be adjusted against the last two instalments of repayment of the advance), and that the amount of advance does not exceed 50 per cent. of the net value of the assets of the applicant in the industry after deducting all encumbrances thereon existing at the time when the application was made, the assets being the collateral security offered by the applicant and the machinery to be purchased by him with the loan. The advance is also subject to the following conditions:—

(*i*) that a mortgage bond be executed jointly by the applicant and his father and mother in a form to be prescribed by Government for the purpose on the lines of the provisions of the rules issued with notification No. 222T.A.I., dated the 24th May 1933;

(*ii*) that interest be charged at the rate of 6¼ per cent. per annum payable with each instalment on the balance of the unpaid principal; and

(*iii*) that the entire amount with interest thereon be repaid in forty quarterly instalments of rupees two hundred and twenty-five each.

Ordered also that the resolution be published in the *Calcutta Gazette*.

By order of the Govt. of Bengal

(Ministry of Industries),

J. D. V. HODGE,

Secy. to the Govt. of Bengal.

RESOLUTION—No. 910IND.

Calcutta, the 14th February 1935.

Minister-in-charge: The Hon'ble Nawab K. G. M. Faroqui, Khan Bahadur.

Read an application, dated the 18th August 1934, from Babu Jitendra Kishore Roy Burman of Jagannathpur, Comilla (Tippera), for a loan of Rs. 500 under the Bengal State Aid to Industries Act, 1931 (Bengal Act III of 1931), for the purpose of opening a pottery concern.

Read also a copy of resolution No. 4 of the meeting of the Board of Industries, Bengal, held on the 15th January 1935, and the report submitted with letter No. 21509G., dated the 26th January 1935, from the Secretary to the Board.

Order—Ordered that the application be rejected and the resolution published in the *Calcutta Gazette*.

By order of the Govt. of Bengal

(Ministry of Industries),

J. D. V. HODGE,

Secy. to the Govt. of Bengal.

Zoological Garden.

NOTIFICATION.

Minister-in-charge: The Hon'ble Nawab K. G. M. Faroqui, Khan Bahadur.

24-Parganas.—No. 903Z.G.—14th February 1935.—Babu Nagendra Nath Banerji, First Assistant Superintendent, Zoological Garden, Alipore, is appointed to be Superintendent of the garden, with effect from the 16th February 1935, *vice* Rai Sahib Somadev Ganguli, retired. He will be on probation for one year.

Forests

NOTIFICATIONS.

No. 208For.—18th February 1935. — Mr. E. O. Shebbeare, Conservator of Forests, Bengal, is allowed leave for seven months, viz., leave on average pay for one month and twenty-two days, under rule 81 (*b*) (*i*) of the Fundamental Rules, with effect from the 1st April 1935, or any subsequent date on which he may avail himself of it, and leave on half average pay for the remaining period, under rule 81 (*d*) of those rules.

Dacca-Mymensingh Divn.—No. 152For.—11th February 1935.—Whereas the lands described in the following schedule were declared to be protected forests under section 28 of the Indian Forest Act (Act VII of 1878) under notification No. 10322For., dated the 27th June 1927, and subsequently declared to be reserved forest under section 20 of the Indian Forest Act, 1927 (XVI of 1927), under the notifications specified respectively against each forest in the schedule, and as more than two-thirds proprietors now desire that these lands be managed by themselves, so in exercise of the power conferred by section 27 of the Indian Forest Act, 1927 (XVI of 1927), the Governor in Council is pleased to direct that the forests shown in the following schedule shall cease to be reserved forest with effect from the 1st April 1935.

The leases granted by the Forest Department to any part of these lands before the 1st April 1935 will remain valid till the expiry of the respective leases:—

Schedule.

Name of mauza.	District Settlement plots.
(1) Betua, jurisdiction list No. 280, police-station Kalihati, Mymensingh—Notification No. 16870For., dated 17th September 1928.	929. Total area in acres 4·00.
(2) Salgrampur, jurisdiction list No. 281, police-station Kalihati, Mymensingh—Notification No. 13404For., dated 20th July 1923.	81, 92, 97 and 211. Total area in acres 20·00.
(3) Majidpur, jurisdiction list No. 199, police-station Mirzapur, Mymensingh—Notification No. 7974For., dated 2nd April 1928.	5, 62, 75, 94, 2/310, 92/317, 8/311. Total area in acres 64·00.
(4) Haritakitala, jurisdiction list No. 191, police-station Mirzapur, Mymensingh—Notification No. 2813For., dated 24th February 1928.	805. Total area in acres 9·00.
(5) Paharkanchanpur, jurisdiction list No. 99, police-station Mirzapur, Mymensingh—Notification No. 3361For., dated 5th March 1928.	67 and 90/136. Total area in acres 15·00.
(6) Saliabaha, jurisdiction list No. 290, police-station Ghatail, Mymensingh—Notification No. 10046For., dated 23rd May 1928.	1034. Total area in acres 6·00.
(7) Pekua, jurisdiction list No. 189, police-station Mirzapur, Mymensingh—Notification No. 9122For., dated 2nd May 1928.	1338, 1008/1470, 1073 and 1413. Total area in acres 30·00.
(8) Dariapur, jurisdiction list No. 95, police-station Basail, Mymensingh—Notification No. 2848For., dated 25th February 1928.	478. Total area in acres 28·00.
(9) Ramdebpur, jurisdiction list No. 287, police-station Ghatail, Mymensingh—Notification No. 10732For., dated 9th June 1928.	860, 870, 1299, 1284/1445, and 1586. Total area in acres 51·00.
(10) Gajeswari, jurisdiction list No. 187, police-station Mirzapur, Mymensingh—Notification No. 9271For., dated 7th May 1928.	668 (excluding an area of 1·18 for plot 927), 675 (excluding its bata plots 916, 917, area 3·50 acres), 685, 687, 754 (excluding its bata plots 918, 919, 925, area 3·28 acres), and 777. Total area in acres 87·00.
(11) Jadabpur, jurisdiction list No. 98, police-station Basail, Mymensingh—Notification No. 3361For., dated 5th March 1928.	993 (part), 999 (part), 777 (part), 796 (part), 802 (part). Total area in acres 106·00.

Name of mauza.	District Settlement plots.
(12) Goyrabetil, jurisdiction list No. 204, police-station Mirzapur, Mymensingh—Notification No. 9184For., dated 4th May 1928.	3, 7, 19, 21, 35, 59, 64/132, 132/6003, 364, 573, 573/5982-5983, 704, 713, 715/6041, 715/6042, 715, 743, 743/5995, 743/5996, 743/6020, 743/6021, 2708, 2708/5935, 6022, 2711, 2713, 2713/5938, 2713/5941, 2716, 3001, 3001/5933, 5934, 3010, 3015, 3044, 3066, 3082, 3084, 3087, 3092, 3092/5932, 3103, 3107, 3107/5931, 3140, 3159, 3159/5930, 3159/5929, 3159/6023, 3159/6024, 3185, 3185/5928, 3223, 3223/5897-5899, 3223/5902, 3223/5926, 3223/6032, 3228, 3228/5893-5896, 3228/5901, 3228/6025, 3228/6026, 3243, 3243/5900, 3243/5925, 3246, 3246/5883, 3246/5885, 3252, 3252/5927, 3252/6027, 3255, 3358, 3363, 3363/5888, 3363/3404, 3363/3405, 3507, 3507/6028, 3511, 3515, 3517, 3520, 3526, 3526/5953, 3526/5954, 3529, 3529/5957, 3529/9558, 3531, 3532, 3538, 3539, 3539/5964, 3539/5965, 3539/6029, 3543, 3545, 3551, 3552, 3555, 3558, 3560, 3562, 3563, 3566, 3568, 3570, 3572, 3576, 3579, 3581, 3586, 3588, 3595, 3597, 3599, 3603, 3606, 3606/5969, 3607, 3610, 3610/5966, 3615, 3615/5967, 3620, 3620/5959, 3623, 3628, 3630, 3630/5968, 3744, 3744/5948, 3744/5949, 3748, 3748/5955, 3748/5956, 3748/6030, 3761/5950-5952, 3751/6031, 3754, 3756, 3759, 3761, 3761/5939, 3761/5940, 3764, 3767, 3772, 3779, 3784, 3787, 3790, 3790/5947, 3792, 3794, 3797, 3799, 3807, 3807/6005, 3810, 3814, 3816, 3818, 3822, 3825, 3837, 3839, 3845, 3849, 3853, 3858, 3860, 3860/5943, 3863, 3867, 3870, 3873, 3877, 3877/5944-5946, 3883, 3887, 3954, 3958, 3963, 3966, 3973, 3975, 3981, 3983, 3985, 3989, 3994, 3997, 4000, 4002, 4006, 4009, 4010, 4010/6006, 4010/6007, 4010/6033, 4012, 4015, 4015/5923, 4015/5924, 4015/6034, 4015/6035, 4019, 4020, 4020/5915, 4022, 4022/5917, 4025, 4038, 4038/5920-5922, 4041/4047, 4043, 4046, 4046/5918, 4202, 4204, 4208, 4211, 4214, 4217, 4221, 4221/5907-5910, 4223, 4223/5911-5913, 4223/6036, 4226, 4226/5916, 4237, 4237/5904, 4237/5905, 4237/6037, 4241, 4241/5906, 4252, 4253, 4259, 4263, 4281/5890, 4285, 4285/5891, 4285/5892, 4290, 4312, 4314, 4316, 4317, 4318/4329, 4319, 4323, 4325, 4327, 5001, 5027, 5032, 5039, 5048, 5060, 5060/5986, 5075, 5081, 5195, 5195/5993, 5201, 5237/5374, 5258, 5263, 5264, 5264/5994, 5268, 5338, 5338/5992, 5510, 5512, 5515, 5515/5979, 5555, 5560, 5576, 5576/5973, 5576/6040, 5578, 5580, 5582, 5582/5972, 5584, 5587, 5590, 5592, 5596, 5612, 5614, 5624, 5638, 5646, 5646/5970, 5648, 5653, 5655, 5657, 5660, 5663, 5665, 5667, 5670, 5671, 5673, 5675, 5677, 5682, 5685, 5687, 5689, 5695, 5699, 5701, 5702/5771, 5703, 5705, 5707, 5710, 5712, 5714, 5716, 5718, 5720, 5722, 5724, 5732, 5734, 5734/5977, 5736, 5736/5978, 5738, 5740, 5740/5974-5976, 5740/6038, 5740/6039, 5750, 5752, 5757, 5759, 5761, 5835, 5835/5980, 5843, 5844, 5846, 5850, 5852, 5854, 5858, 5860, 5862, 5864, 5865, 5867. Total area in acres 2,174·00.
(13) Hamidpur, jurisdiction list No. 260, police-station Kalihati, Mymensingh—Notification No. 10732For., dated 9th June 1928.	718/1097. Total area in acres 1·00.

J. D. V. HODGE,

Secy. to the Govt. of Bengal.

Orders by the Conservator of Forests, Bengal.

Kurseong-Sundarbans. — No. 1669For. — 12th February 1935.—Babu Suresh Chandra Basu, Extra Assistant Conservator of Forests, is transferred from the Kurseong to the Sundarbans Division in the interest of the public service. He was posted as an attached officer with headquarters at Khulna with effect from the 12th January 1935 and placed in charge of the Basirhat Range with headquarters at Rampura with effect from the afternoon of the 17th January 1935.

E. O. SHEBBEARE,
Conservator of Forests, Bengal.

REVENUE DEPARTMENT.

Land Revenue.

NOTIFICATION.

Birbhum-Jessore. — No. 2485L.R. — 12th February 1935.—Babu Gadadhar Singh Ray, Sub-Deputy Collector, Birbhum, is appointed to be the Cess Revaluation Officer in the district of Jessore under the Bengal Cess Act, 1880 (Act IX of 1880), with effect from the date on which he takes over charge of his duties.

Land Acquisition.

NOTIFICATIONS.

Birbhum.—No. 2623L.A.—15th February 1935.—Whereas it appears to the Governor in Council that land is likely to be required to be taken by Government at the expense of Nanasole union board for a public purpose, viz., for the construction of a road from Jalalnagore to Shabazpur, in the village of Chun-Palashi, jurisdiction list No. 100, thana Ellambazar, pargana Senbhum, district Birbhum, it is hereby notified that for the above purpose a piece of land comprising portions of cadastral plot Nos. 557 and 554 and measuring, more or less, .0·109 of an acre, is likely to be required within the aforesaid village of Chun-Palashi.

This notification is made, under the provisions of section 4 of Act I of 1894, to all whom it may concern.

A plan of the land may be inspected in the office of the Collector of Birbhum.

In exercise of the powers conferred by the aforesaid section, the Governor in Council is pleased to authorise the officers for the time being engaged in the undertaking, with their servants and workmen, to enter upon and survey the land and do all other acts required or permitted by that section.

Any person interested in the above land, who has any objection to the acquisition thereof, may, within thirty days after the date on which public notice of the substance of this notification is given in the locality, file an objection in writing before the Collector of Birbhum.

Burdwan.—No. 2626L.A.—15th February 1935.—Whereas it appears to the Governor in Council that land is likely to be required to be taken by Government at the public expense for a public purpose, viz., for constructing diversion of a portion at mile 3 of Sodepur branch of the East Indian Railway in the villages of Lachhipur and Aldihi, jurisdiction list Nos. 14 and 18, respectively, thana Niamatpur, pargana Shergarh, district Burdwan, it is hereby notified that for the above purpose, a piece of land comprising cadastral survey plot Nos. 177 and 182 and parts of cadastral survey plot Nos. 133-135, 139, 153, 156-158, 175-184, 186-188, 190-192, 210-214, 216 and 286 in mauza Lachhipur, parts of cadastral survey plot Nos. 2-9, 11, 17, 18, 23-32, 35-37, 727-729, 741, 746, 748, 1395, 1412 and cadastral survey plot Nos. 19-22, 726, 742-745 and 747 in mauza Aldihi and measuring, more or less, 12·09 acres, is likely to be required within the aforesaid villages of Lachhipur and Aldihi.

This notification is made, under the provisions of section 4 of Act I of 1894, to all whom it may concern.

A plan of the land may be inspected in the office of the Special Land Acquisition Officer, Burdwan, as well as in that of the Superintendent, Way and Works, East Indian Railway, Asansol.

In exercise of the powers conferred by the aforesaid section, the Governor in Council is pleased to authorise the officers for the time being engaged in the undertaking, with their servants and workmen, to enter upon and survey the land and do all other acts required or permitted by that section.

Any person interested in so much of the above land, as are not waste or arable, who has any objection to the acquisition thereof, may, within thirty days after the date on which public notice of the substance of this notification is given in the locality, file an objection in writing before the Collector of Burdwan.

In exercise of the powers conferred by section 17 (*4*) of the Land Acquisition Act, I of 1894, as amended by Act XXXVIII of 1923, the Governor in Council is pleased to direct that the provisions of section 5A of the Act shall not apply to the waste or arable portions of the land in this case.

Chittagong.—No. 2629L.A.—15th February 1935.—The Additional District Magistrate, Chittagong (*ex-officio*), is vested with the powers of a Collector under the Land Acquisition Act, I of 1894, in that district.

Hooghly.—No. 2631L.A. — 15th February 1935.—Whereas it appears to the Governor in Council that land is likely to be required to be taken by Government partly at the public expense and partly at the expense of the Mission Girls' School authority for a public purpose, viz., for the Mission Girls' School on the High Street, Serampore, in the village of Serampore, jurisdiction list No. 17, thana Serampore, pargana Boro, district Hooghly, it is hereby notified that for the above purpose a piece of land comprising cadastral plot Nos. 3174 and

3174/3518, and measuring, more or less, 0·380 of an acre, bounded on the—

North—By land and pucca house of Babu Balai Chandra Goswami,

East—By land and pucca house of Sreemati Pramila Sundari Debi and Ram Kripal Ojha,

South—By High Street,

West—By land and pucca house of Babu Sarat Chandra Goswami and Babu Balai Chandra Goswami,

is likely to be required within the aforesaid village of Serampore.

This notification is made, under the provisions of section 4 of Act I of 1894, to all whom it may concern.

A plan of the land may be inspected in the office of the Land Acquisition Officer, Serampore.

In exercise of the powers conferred by the aforesaid section, the Governor in Council is pleased to authorise the officers for the time being engaged in the undertaking, with their servants and workmen, to enter upon and survey the land and do all other acts required or permitted by that section.

Any person interested in the above land, who has any objection to acquisition thereof, may, within thirty days after the date on which public notice of the substance of this notification is given in the locality, file an objection in writing before the Collector of Hooghly.

Dacca.—No. 2634L.A.—15th February 1935.—Whereas it appears to the Governor in Council that land is likely to be required to be taken by Government at the expense of the Dacca Municipality, for a public purpose, viz., for a metar's passage at Jariatuly, in the mahalla of Jariatuly, parganas Jahangirnagar, Tappasaystanagar and Saystanagar, district Dacca, it is hereby notified that for the above purpose a piece of land comprising parts of cadastral survey plot Nos. 274, 361, 366, 357, 356, 344, 343, 342, 341, 326, 347, 340, 335, 336, 338, 339, 3 and 7, and measuring, more or less, 0·1105 of an acre, is likely to be required within the aforesaid mahalla of Jariatuly.

This notification is made, under the provisions of section 4 of Act I of 1894, to all whom it may concern.

A plan of the land may be inspected in the office of the Collector of Dacca.

In exercise of the powers conferred by the aforesaid section the Governor in Council is pleased to authorise the officers for the time being engaged in the undertaking, with their servants and workmen, to enter upon and survey the land and do all other acts required or permitted by the section.

Any person interested in the above land, who has any objection to the acquisition thereof, may, within thirty days after the date on which public notice of the substance of this notification is given in the locality, file an objection in writing before the Collector of Dacca.

Dacca.—No. 2640L.A. — 15th February 1935.—Babu Mani Mohan Ghosh, Deputy Magistrate and Deputy Collector in the district of Dacca, is vested with the powers of a Collector under the Land Acquisition Act, I of 1894, in the Sadar and Manikganj subdivisions of that district.

Darjeeling.—No. 2740L.A.—18th February 1935.—Mr. Basanta Kumar Mukharji, Deputy Magistrate and Deputy Collector, Darjeeling, is vested with the powers of a Collector, under the Land Acquisition Act, I of 1894, in the Sadar subdivision of that district.

24-Parganas.—No. 2742L.A. — 18th February 1935.—Whereas it appears to the Governor in Council that land is likely to be required to be taken by Government at the expense of the Baraset-Basirhat Light Railway for a public purpose, viz., for proposed siding of Baraset-Basirhat Light Railway for sugar factory at Maitrabagan in the village of Bhabanipur, jurisdiction list No. 44, thana Basirhat, pargana Balia, district 24-Parganas, it is hereby notified that for the above purpose three pieces of land comprising cadastral plot No. 367 and portions of cadastral plot Nos. 366, 358, 359, 357, 348, 356, 355, 354, 353, 350, 351, 352, 344, 343, 342, 341 and 145, and altogether measuring, more or less, 1·415 acre, are likely to be required within the aforesaid village of Bhabanipur.

This notification is made, under the provisions of section 4 of Act I of 1894, to all whom it may concern.

A plan of the land may be inspected in the office of the Chief Engineer, Baraset-Basirhat Light Railway.

In exercise of the powers conferred by the aforesaid section, the Governor in Council is pleased to authorise the officers for the time being engaged in the undertaking, with their servants and workmen, to enter upon and survey the land and do all other acts required or permitted by that section.

Any person interested in the above land, who has any objection to the acquisition thereof, may, within thirty days after the date on which public notice of the substance of this notification is given in the locality, file an objection in writing before the Collector of the 24-Parganas.

Burdwan.—No. 2745L.A.—18th February 1935.—Whereas it appears to the Governor in Council that land is likely to be required to be taken by Government at the public expense for a public purpose, viz., for constructing the approaches of the proposed bridge at mile 13, chainage 27 and 57 feet, of distributary No. 6 of the main canal, Damodar Canal Project, in the village of Ramchandrapur, jurisdiction list No. 109 in thana Burdwan, pargana Shahabad, district Burdwan, it is hereby notified that for the above purpose two pieces of land comprising parts of cadastral survey plot Nos. 2428-2431, and altogether measuring, more or less, 0·38 of an acre, are likely to be required within the aforesaid village of Ramchandrapur.

This notification is made, under the provisions of section 4 of Act I of 1894, to all whom it may concern.

A plan of the land may be inspected in the office of the Special Land Acquisition Officer, Burdwan, as well as in that of the Executive Engineer, Damodar Canal Division, Burdwan.

In exercise of the powers conferred by the aforesaid section, the Governor in Council is pleased to authorise the officers for the time being engaged in the undertaking, with their servants and workmen, to enter upon and survey the land and do all other acts required or permitted by that section.

In exercise of the powers conferred by section 17 (*4*) of the Land Acquisition Act, I of 1894, as amended by Act XXXVIII of 1923, the Governor in Council is pleased to direct that the provisions of section 5A of the Act shall not apply in this case.

Dacca.—No. 2748L.A. — 18th February 1935.—The Governor in Council is pleased to cancel the notification No. 12050L.A., dated the 1st November 1933, published under section 4 of the Land Acquisition Act, I of 1894, at page 1604, Part I of the *Calcutta Gazette* of the 9th idem, in respect of the acquisition of 0·733 of an acre of land required by the Chandanbari union board, for the excavation of a khal to drain off the water of a beel named "Joaria Khagatia" running from east to west through mauza Gazaria, pargana Baradakhat, tappa Panchbhag, zilla Dacca.

24-Parganas.—No. 2754L.A.—18th February 1935.—Whereas it appears to the Governor in Council that land is likely to be required to be taken by Government at the expense of the Bansdroni union board for a public purpose, viz., for a public burning ghat, in the village of Kamdahari, jurisdiction list No. 49, thana Tollygunge, pargana Magura, district 24-Parganas, it is hereby notified that for the above purpose a piece of land comprising cadastral plot No. 1121 and a portion of plot No. 863, and measuring, more or less, 0·2479 of an acre, is likely to be required within the aforesaid village of Kamdahari.

This notification is made, under the provisions of section 4 of Act I of 1894, to all whom it may concern.

A plan of the land may be inspected in the office of the Land Acquisition Deputy Collector, Alipore.

In exercise of the powers conferred by the aforesaid section, the Governor in Council is pleased to authorise the officers for the time being engaged in the undertaking, with their servants and workmen, to enter upon and survey the land and do all other acts required or permitted by that section.

Any person interested in the above land, who has any objection to the acquisition thereof, may, within thirty days after the date on which public notice of the substance of this notification is given in the locality, file an objection in writing before the Collector of the 24-Parganas.

Howrah. — No. 2757L.A.—18th February 1935.—Whereas it appears to the Governor in Council that land is likely to be required to be taken by Government at the expense of the Howrah Mills Co., Ltd., for erection of modern housing, schools, clinics, etc., for the workmen employed by the company, in the village of Baje-Sibpur, jurisdiction list No. 12, thana Sibpur, pargana Boro, district Howrah, it is hereby notified that for the above purpose a piece of land measuring, more or less, 14·9731 acres, bounded on the—

North—By Parks Garden Lane,

East—By Grand Trunk Road,

South—By the lands of Suresh Chandra Manna, Shyamapado Ghosh, Haradhan Ghosh and brothers and Harimoti Dasi, and Sibpur police ground,

West—By the lands of Charu Ch. Nandi, Sm. Sushila Dasi, Sm. Sushila Dasi and Natabar Nandy, Priya Manna Basti 3rd Lane, Mulai Das Shaw Kalower, Hari Mohan De, Dharani Dhar Chatterjee, Sm. Suradhoni Debi and Nantu Dutta and brothers,

is likely to be required within the aforesaid village of Baje-Sibpur.

This notification is made under the provisions of section 4 of Act I of 1894, to all whom it may concern.

A plan of the land may be inspected in the office of the Collector of Howrah.

In exercise of the powers conferred by the aforesaid section, the Governor in Council is pleased to authorise the officers for the time being engaged in the undertaking, with their servants and workmen, to enter upon and survey the land and do all other acts required or permitted by that section.

Any person interested in the above land, who has any objection to the acquisition thereof, may, within thirty days after the date on which public notice of the substance of this notification is given in the locality, file an objection in writing before the Collector of Howrah.

DECLARATIONS.

Faridpur.—No. 2637L.A. — 15th February 1935.—Whereas it appears to the Governor in Council that land is required to be taken by Government at the expense of the Char Bhadrasan and Akhaterchar union boards for a public purpose, viz., for excavating a khal from Kamarbari beel (within mauza Char Bhadrasan) to the Ramnagar river in the villages of Char Bhadrasan and Char Ramnagar, jurisdiction list Nos. 164 and 42, respectively, in thanas Faridpur and Bhanga, parganas Char Mukundia and Char Madhurdia, district Faridpur, it is hereby declared that for the above purpose a piece of land comprising portions of cadastral plot Nos. 12864 to 12866, 12871 to 12875, 12881, 12886 12887, 14474, 14475, 14504 to 14511, 14521, 14522, 14553 to 14555, 14580 to 14585 and 14588 of mauza Char

Bhadrasan and 558, 560, 563 to 565, 570, 573, 575, 581, 585 and 720 of mauza Char Ramnagar, and measuring, more or less, 3·70 acres, is required within the aforesaid villages of Char Bhadrasan and Char Ramnagar.

This declaration is made, under the provisions of section 6 of Act I of 1894, to all whom it may concern.

A plan of the land may be inspected in the office of the Collector of Faridpur.

Burdwan.—No. 2751L.A.—18th February 1935.—Whereas it appears to the Governor in Council that land is required to be taken by Government at the public expense for a public purpose, viz., for constructing distributary No. 5, main canal, Damodar Canal Project, from its source to mile 1, chainage 5 and 70 feet, in the villages of Sanko, Sasanga and Belgram, jurisdiction list Nos. 154, 153 and 152, respectively, thana Galsi, parganas Bagha and Burdwan, district Burdwan, it is hereby declared that for the above purpose three pieces of land comprising parts of cadastral survey plot Nos. 6679, 7514 and 7515 in mauza Sanko, parts of cadastral survey plot No. 325 in mauza Sasanga, and parts of cadastral survey plot No. 1710 in mauza Belgram and altogether measuring, more or less, 0·52 of an acre, are required within the aforesaid villages of Sanko, Sasanga and Belgram.

This declaration is made under the provisions of section 6 of Act I of 1894, to all whom it may concern.

A plan of the land may be inspected in the office of the Special Land Acquisition Officer, Burdwan, as well as in that of the Executive Engineer, Damodar Canal Division, Burdwan.

Excise.

NOTIFICATIONS.

Minister-in-charge: The Hon'ble Sir Bijoy Prasad Singh Roy, Kt.

No. 151Ex.—15th February 1935.—Mr. H. V. Boilard is allowed leave on average pay for eight months, under rule 81 (*b*) (*ii*) of the Fundamental Rules, with effect from the 23rd March 1935, or any subsequent date on which he may avail himself of it.

No. 159Ex.—16th February 1935.—The following Sub-Inspectors of Excise and Salt are appointed to be temporary Inspectors of Excise and Salt with effect from the dates on which they assume charge:—

Babu Gurudas Banerjee.
Babu Hem Chandra Banerjee.
Babu Nikhil Chandra Roy.
Babu Jasada Kumar Malakar.

O. M. MARTIN,
Secy. to the Govt. of Bengal.

Orders by the Commissioner of Excise and Salt, Bengal.

No. 51Exc.—14th February 1935. — The following Sub-Inspectors of Excise and Salt, whose appointments as either officiating or temporary Inspectors of Excise and Salt have been approved of by Government, were posted to the stations noted against their names:—

Babu Sashi Bhusan Pal—Calcutta (Match and Sugar Excise work).
Babu Haran Chandra Gupta—Calcutta (Match and Sugar Excise work).
Babu Surendra Nath Bose—Jalpaiguri (Match and Sugar Excise work).
Babu Harendra Nath Mandal—Calcutta (Tiger Chemical Works).
Babu Jyoti Prokas Sen—Calcutta (Licensing Branch).
Babu Khitish Chandra Mukherjee—Calcutta (Detection Branch).

No. 52Exc.—16th February 1935.—The orders contained in this office notification No. 50Exc., dated 1st February 1935, transferring Babu Khagendra Nath Acharyya from Nadia to the Bonded Laboratory of Messrs. Abdul Gunny and Company in Calcutta are cancelled.

No. 53Exc.—16th February 1935.—In partial modification of this office notification No. 50Exc., dated 1st February 1935, Babu Khitish Chandra Sen is posted to the Bonded Laboratory of Messrs. Abdul Gunny and Company in Calcutta in the interest of public service.

No. 54Exc.—16th February 1935.—Babu Subal Chandra Roy, Inspector of Excise and Salt, now employed on salt duty in this office, is posted to the Katwa Range in Burdwan in the interest of public service.

S. K. HALDAR,
Commr. of Excise and Salt, Bengal.

BENGAL LEGISLATIVE COUNCIL DEPARTMENT.

NOTIFICATIONS.

No. 943L.C.—16th February, 1935.—It is hereby notified in pursuance of rule 14 (*9*) of the Bengal Electoral Rules that Mr. F. C. Guthrie has been declared under rule 14 (*2*) of the aforesaid rules to have been duly elected by the Presidency and Burdwan (European) Constituency to be a member of the Bengal Legislative Council.

No. 986L.C.—19th February, 1935.—It is hereby notified in pursuance of rule 14 (*9*) of the Bengal Electoral Rules that Mr. Thomas Lamb has been declared under rule 14 (*2*) of the aforesaid rules to have been duly elected by the Bengal Chamber of Commerce constituency to be a member of the Bengal Legislative Council.

J. W. MCKAY,
Secy. to the Bengal Legis. Council.

TREASURY NOTICES.

Dinajpur, the 13th February 1935.

Uncovenanted Deputy Collector Babu Mangal Kumar Acharji has been placed in the executive charge of the Dinajpur Treasury with effect from the 13th February 1935 and is authorised to draw bills on other Treasuries.

S. P. GHOSH, *Collector.*

Orders by the Deputy Accountant-General, Bengal.

The Treasury, the 13th February 1935.

It is notified that the refund order No. 846 containing 50 orders "Pink" is in use by the Income-tax Office, Railway and Miscellaneous Salaries Circle, Calcutta, with effect from the 24th January 1935.

It is notified that the refund order No. 847 containing 50 orders "Pink" is in use by the Income-tax Office, Railway and Miscellaneous Salaries Circle, Calcutta, with effect from the 4th February 1935.

It is notified that the refund order No. 4759 containing 50 orders "White" is in use by the Income-tax Office, Military Circle, Meerut, with effect from the 6th February 1935.

A. R. REBELLO,

Dy. Accountant-General, Bengal.

HIGH COURT NOTICES.

English Department—Civil.

The 13th February 1935.

No. 3262E.—The undermentioned mukhtar having withdrawn the security deposited by him under the rules of the Court has ceased to be a mukhtar of the High Court on its Appellate Side. His certificate has been cancelled and his name removed from the roll:—

Name.	Number in the Roll.
Nandalal Banerji ...	2 of 1929.

By order of the High Court,

J. J. YOUNG, *Assistant Registrar.*

The 15th February 1935.

No. 3435A.—Babu Syamadas Chatarji, officiating munsif, under orders of transfer to Amta, in the district of Hooghly, is vested with the powers of a Judge of a Court of Small Causes for the trial of suits cognizable by such a Court up to the value of Rs. 50 within the local limits of the Amta munsifi.

Civil.

The 14th February 1935.

No. 3364A.—Babu Janardan Prasad Mukharji, munsif of Krishnagar, in the district of Nadia, is vested with the powers of a Judge of a Court of Small Causes for the trial of suits cognizable by such a Court up to the value of Rs. 100 within the local limits of the Krishnagar munsifi.

By order of the High Court,

N. L. HINDLEY, *Registrar.*

ORDERS BY COMMISSIONERS OF DIVISIONS.

Burdwan Division—Chinsura.

No. 730J.G.—9th February 1935. — Babu Anubhuti Bhattacharjee, Sub-Deputy Collector and Circle Officer of Uluberia, in the district of Howrah, is granted leave on average pay, under rule 81 (*b*) (*ii*) of the Fundamental Rules, for six weeks from the 8th March to the 18th April 1935. He is permitted to affix the Easter holidays to his leave.

No. 744J.G.—9th February 1935. — Babu Kalipada Das Gupta, Sub-Deputy Collector, Uluberia, employed in the general line, is appointed Circle Officer of Uluberia, *vice* Babu Anubhuti Bhattacharjee, proceeding on leave.

No. 735J.G.—11th February 1935. — The appointment of Mrs. Doha as a non-official lady visitor of the Suri Jail in the district of Birbhum made in this office notification No. 2731J.G. of the 27th July 1933, is hereby cancelled under rule 63 (A) of Chapter IV of the Bengal Jail Code, Volume I, for failure to visit the jail for a continuous period of three months.

No. 739J.G.—11th February 1935. — In accordance with the provisions of rule 63 (*2*) of Chapter IV of the Bengal Jail Code, Volume I, I hereby appoint Mrs. Bela Guha to be a non-official lady visitor of the Suri Jail in the district of Birbhum for a period of two years with effect from the date of this notification.

No. 253M.—12th February 1935. — It is hereby notified for general information that, under rule 20 (*b*) of the rules for the management of hospitals and dispensaries in Bengal, the following gentlemen have been appointed to be members of the committee for the management of the charitable dispensary at Chandrakona in the district of Midnapore:—

The Subdivisional Officer, Ghatal.
The Assistant Surgeon, Ghatal.
Babu Janaki Pada Dutta.
Babu Ajoy Kumar Sarkar.
Babu Bimala Charan Goswami.
Babu Bankim Chandra De.
Babu Ram Das Haldar.
Babu Sidheswar Dutta.
Burdwan Raj, represented by Daroga in charge of Chandrakona Thakurbari.
Munshi Amiruddin Ahmed.
Babu Sarat Chandra Ghosal.
Babu Pramatha Lal Mitra.

No. 297L.S.-G. — 12th February 1935. — In exercise of the powers conferred on me by section 19 (*2*) of the Bengal Local Self-Government Act [Act III (B.C.) of 1885] and acting under the orders of the Local Government given in the exercise of the administrative control vested in them by section 29B of the Act, I hereby appoint Dr. E. Harold Carson Maguire to be a member of the Bankura district board in the district of Bankura, *vice* Rev. W. J. Culshaw, resigned.

No. 299L.S.-G.—12th February 1935. — It is hereby notified for general information that, under rule 20 (*b*) read with rule 23 of the rules for the management of charitable hospitals and dispensaries in Bengal, Sk. Golam Yusuf has been appointed to be a member of the committee for the management of the Amragori Iswar Chandra Charitable Dispensary in the district of Howrah, *vice* Munshi Rahat Ali, resigned.

No. 326L.S.-G.—15th February 1935.—It is hereby notified for general information that, under rule 20 (*b*) of the rules for the management of charitable hospitals and dispensaries in Bengal, the following gentlemen have been appointed to be members of the committee for the management of the charitable dispensary at Simlapal in the district of Bankura:—

The Circle Officer, Raipur (*ex-officio*).
The Officer-in-charge, Simlapal police-station (*ex-officio*).
Babu Madan Mohan Singh Chaudhury.
The Sanitary Inspector, Simlapal (*ex-officio*).
Babu Bijoy Chandra Singh Chaudhury.
Babu Balagovinda Singh.
Babu Bhagbat Chandra Banerji.

No. 329L.S.-G.—15th February 1935.—It is hereby notified for general information that, under rule 20 (*b*) of the rules for the management of charitable hospitals and dispensaries in Bengal, the following gentlemen have been appointed to be members of the committee for the management of the charitable dispensary at Onda in the district of Bankura:—

The Circle Officer, Sadar (*ex-officio*).
The Sub-Registrar, Onda (*ex-officio*).
The Officer-in-charge, Onda police-station (*ex-officio*).
The Sanitary Inspector, Onda (*ex-officio*).
Babu Kalidas Chakravarty.
Babu Satish Chandra Dutta.
Babu Amaresh Chandra Mookerji.
Babu Rash Behari Mandal.

No. 332L.S.-G.—15th February 1935.—It is hereby notified for general information that, under rule 20 (*b*) of the rules for the management of charitable hospitals and dispensaries in Bengal, the following gentlemen have been appointed to be members of the committee for the management of the charitable dispensary at Indus in the district of Bankura:—

The Subdivisional Officer, Vishnupur (*ex-officio*).
The Sub-Registrar, Indus (*ex-officio*).
Babu Prafulla Kumar Basu.
Babu Sarat Kumar Bose.
Babu Hem Chandra Neogy.
Babu Prafulla Chandra Sarkar.
Babu Devendra Nath Mitra.

No. 335L.S.-G.—15th February 1935.—It is hereby notified for general information that, under rule 20 (*b*) of the rules for the management of charitable hospitals and dispensaries in Bengal, the following gentlemen have been appointed to be members of the committee for the management of the charitable dispensary at Patrasayer in the district of Bankura:—

The Subdivisional Officer, Vishnupur (*ex-officio*).
The Circle Officer, Patrasayer (*ex-officio*).
Babu Natabar Dutta.
Babu Prakash Chandra Hazra.
Babu Upendra Nath Hazra.
Babu Mihirlal Hazra.
Babu Ramsatya Ghosal.
Babu Ramsankar Dey.
Babu Santanath Chatterji.
The Head Master, Patrasayer High English School (*ex-officio*).

No. 338L.S.-G.—15th February 1935.—It is hereby notified for general information that, under rule 20 (*b*) of the rules for the management of charitable hospitals and dispensaries in Bengal, the following gentlemen have been appointed to be members of the committee for the management of the charitable dispensary at Ramdiha in the district of Bankura:—

The Circle Officer, Vishnupur (*ex-officio*).
The Sub-Registrar, Kotulpur (*ex-officio*).
Babu Rampado Singh Ray.
Babu Rakhal Chandra Nag.
Babu Dwarkanath Ray.
Babu Bholanath Upadhyaya.
Babu Upendra Nath Ray.
Maulvi Banku Khan.

No. 341L.S.-G.—15th February 1935. — It is hereby notified for general information that, under rule 20 (*b*) of the rules for the management of charitable hospitals and dispensaries in Bengal, the following gentlemen have been appointed to be members of the committee for the management of the charitable dispensary at Kuchiakol in the district of Bankura:—

The Circle Officer, Vishnupur (*ex-officio*).
The Officer-in-charge, Joypur police-station (*ex-officio*).
Babu Kshetra Mohan Sing Thakur.
Rai Sahib Akalanka Chandra Mukherji.
Babu Krishna Das Salui.
Babu Karunamoy Roy.
Babu Surendra Nath Mukherji.
Babu Brojanath Chaudhury.

No. 295M.—16th February 1935.—It is hereby notified for general information that, under rule 20 (*b*) of the rules for the management of charitable hospitals and dispensaries in Bengal, the following gentlemen have been appointed to be members of the committee for the management of the charitable dispensary at Dainhat in the district of Burdwan:—

The Subdivisional Officer, Katwa.
The Sanitary Inspector, district board (Katwa thana).
Babu Kumar Chandra Mukherjee.
Babu Hari Das Dutt.
Babu Renu Pada Chatterjee.
Babu Joy Krishna Banerjee.
Babu Harendra Lal Das.
Babu Kali Charan Mukherjee.
Babu Ram Ranjan Adhikary.
Babu Niranjan Rababi.
Babu Satish Chandra Bhattacharjee.
Kazi Habibar Rahman.

L. B. BURROWS, *Commissioner.*

Burdwan, the 11th February 1935.

It is hereby notified for general information that, under section 13 of the Bengal Village Self-Government Act, 1919 (Bengal Act V of 1919), read with rule 35 of the rules for the election and appointment of members of union boards, etc., Babu Panchu Gopal Singha has been duly elected to be a member of Ward II of the Nadanghat union board in police-station Purbasthali in the Kalna subdivision of Burdwan, *vice* Babu Shyama Pada Singha, deceased.

It is hereby notified for general information that, under section 13 of the Bengal Village Self-Government Act, 1919 (Bengal Act V of 1919), read with rule 36 of the rules for the election and appointment of members of union boards, etc., Babu Haridas Banerji has been appointed by the District Magistrate of Burdwan to be a member of the Kusumgram union board in police-station Monteswar in the Kalna subdivision of Burdwan, *vice* Babu Kshetranath Banerji, deceased.

Burdwan, the 13th February 1935.

It is hereby notified for general information that, under section 13 of the Bengal Village Self-Government Act, 1919 (Bengal Act V of 1919), read with rule 35 of the rules for the election and appointment of members of union boards, etc., Munshi Choudhury Mahammad Afsar has been duly elected to be a member of Ward No. II of the Bamunara union board in police-station Bhatar in the Sadar subdivision of Burdwan, *vice* Munshi Dayud Shaikh, deceased.

It is hereby notified for general information that, under section 13 of the Bengal Village Self-Government Act, 1919 (Bengal Act V of 1919), read with rule 35 of the rules for the election and appointment of members of union boards, etc., Babu Saroj Ranjan Mozumdar has been duly elected to be a member of Ward No. I of the Lowa union board in police-station Galsi in the Sadar subdivision of Burdwan, *vice* Babu Bindu Behari Mozumdar, deceased.

M. M. STUART, *District Magistrate.*

Burdwan, the 14th February 1935.

It is hereby notified for general information that, under section 13 of the Bengal Village Self-Government Act, 1919 (Bengal Act V of 1919), read with rule 36 of the rules for the election and appointment of members of union boards, etc., Babu Bamacharan Koar has been appointed by the District Magistrate of Burdwan to be a member of the Rayan union board in police-station Burdwan in the Sadar subdivision of Burdwan, *vice* Babu Akshoy Kumar Some, deceased.

C. L. MUKHERJI, for *District Magistrate.*

Orders by the Deputy Inspector-General of Police, Burdwan Range.

Chinsura.—No. 998.—7th February 1935.—In partial modification of the orders published under notification No. 6988, dated the 30th November 1934, and No. 285, dated the 11th January 1935, published in the *Calcutta Gazette*, dated the 13th December 1934 and the 17th January 1935, respectively, Babu Nritya Gopal Mukharji, Inspector, Hooghly, is granted 2 months' leave on average pay, under rule 81 (*b*) (*ii*) of the Fundamental Rules, with effect from the 10th December 1934.

On being relieved of his officiating appointment as Inspector, Midnapore, Babu Jatindra Mohan Sen Gupta will continue to act as such with effect from 24-2-1935, a.m., *vice* Maulvi Muzaffar Ali Khan, Inspector, Midnapore, appointed to act as Deputy Superintendent of Police.

Sub-Inspector Jawadul Karim of the East Indian Railway Police, Howrah, is appointed to act as Inspector, Hooghly, *vice* Babu Basudeb Kabiraj, Inspector, appointed to act as Deputy Superintendent of Police, Howrah.

The transfer is effected in the interests of public service.

E. B. JONES,

Deputy Inspector-General of Police.

Chittagong Division—Chittagong.

No. 869G.—16th February 1935.—In supersession of this office notification No. 644G., dated the 4th February 1935, Babu Sailendra Nath Das Gupta, Sub-Deputy Collector, Chittagong, is appointed Circle Officer of the Sitakunda circle within the same district.

No. 874G.—16th February 1935.—Maulvi Saiyid Abbas Ali, Sub-Deputy Collector, on leave, who has been posted to this division in Government notification No. 1178A., dated the 4th February 1935, is posted temporarily to Feni in the district of Noakhali for realisation of agricultural loan.

No. 879G.—16th February 1935.—Maulvi Muhammad Abu Yusuf, Sub-Deputy Collector and Circle Officer, Sitakunda Circle, in the district of Chittagong, is transferred to Satkania within the same district as Circle Officer.

2. The transfer is made in the public interest.

H. J. TWYNAM, *Commissioner.*

Dacca Division—Dacca.

No. 703J. — 11th February 1935. — It is notified for general information that in exercise of the powers delegated to me by the Bengal Government notification No. 3403L.S.-G., dated the 1st December 1904, I do hereby direct under section 6 (*c*) of the Bengal Ferries Act, I of 1885, that the new public ferry at Sheoranunda, police-station Kalamakanda over river Gumai under Netrokona subdivision of the district of Mymensingh be declared as a 3rd class public ferry.

2. In exercise of the powers delegated to me by the Bengal Government notification No. 2141L.S.-G., dated the 20th July 1920, I direct under section 35 of the aforesaid Act as amended by section 2 read with Schedule I of the Bengal Village Self-Government Act, V of 1919, that the said ferry shall be managed by the district board of Mymensingh and the proceeds of the ferry and all fines levied and compensation received under the said Act in respect thereof shall be paid into the district fund of Mymensingh with effect from the date of this notification.

W. H. NELSON, *Commissioner.*

Mymensingh, the 9th February 1935.

No. 92C.—It is hereby notified for general information that—

(*a*) Under sub-section (*2*) of section 6 of the Bengal Village Self-Government Act, 1919 (Bengal Act V of 1919), the following gentlemen have been duly elected to be members of the undermentioned union boards in the Tangail subdivision of the Mymensingh district:—

Police-station Tangail.

I.—Magra union board.

Babu Durganath Pal.
Babu Amulya Chandra Choudhury.
Babu Bhupendra Nath Sen.
Munshi Ijjatulla Munshi.
Munshi Menhajuddin Khan.
Munshi Karim Baks Sarkar.

II.—Gala union board.

Babu Hem Chandra Roy.
Babu Rajani Kanto Chakraborty.
Babu Jadu Nath Sarkar.
Babu Jagadish Chandra Bhoumik.
Babu Surendra Nath Bhoumik.
Maulvi Mahamadali, B.L.

III.—Gharinda union board.

Babu Jogesh Gobinda Mazumder.
Babu Suresh Gobinda Mazumder.
Babu Keshori Mohan Bhoumik.
Maulvi Md. Mosaraf Hossain Khan.
Maulvi Ismail Khan.
Maulvi Salimudin Fakir.

IV.—Karatia union board.

Maulvi Syed Muzaffar Al Musavi.
Maulvi Reazuddin Talukdar.
Maulvi Anisuddin Mia.
Babu Umesh Chandra Kabyaratna.
Babu Rajendra Mohan Shah Choudhury.
Babu Naba Kumer Roy Choudhury.

V.—Pathrail union board.

Babu Kamini Kumar Neogi.
Babu Kanai Lal Basak.
Maulvi Hazi Enzadali Talukdar.
Maulvi Fazlar Rahman Mia.
Munshi Emamuddin Sarkar.
Munshi Jinnatulla Molla.

VI.—Delduar union board.

Munshi Osmanudin Sarkar.
Munshi Abbas Ali Meah of Madar Kola.
Munshi Abbas Ali Meah of Bande Saharatoil.
Munshi Jasimuddin Ahmed.
Munshi Abdul Haque Mir.
Babu Debesh Chandra Sen.

VII.—Fazilhati union board.

Maulvi Abdul Satter Ahmed.
Munshi Maseruddin Mia.
Munshi Habibar Rahman Mia.
Munshi Saharuddin Sarkar.
Munshi Alfazuddin Mia.
Babu Satish Chandra Ghosh.

VIII.—Elashin union board.

Babu Har Chandra Biswas.
Babu Jamini Mohan Biswas.
Munshi Hanifuddin Sarkar.
Munshi Daneshali Sarkar.
Munshi Saritulla Sarkar.
Maulvi Khondkar Momtajuddin.

IX.—Atia.

Munshi Madari Sarkar.
Munshi Mir Abdul Salam.
Munshi Asabali Dewan.
Maulvi Mainuddin, B.A.
Babu Baikunta Nath Gossai.
Babu Abinash Chandra De Roy.

X.—Silimpur union board.

Babu Surendra Chandra Mazumder.
Babu Birendra Kumar Saha.
Babu Bhabani Prosad Saha.
Munshi Mofizuddin Dewan.
Munshi Beramali Mia.
Munshi Tazammal Hossain.

XII.—Danya union board.

Babu Jotindra Nath Roy.
Babu Girindra Mohan Baksi.
Babu Barada Charan Bosu Mazumder.
Babu Brajabasi Poddar.
Maulvi Abdul Hakim.
Maulvi Ahmadali Mia.

XIV.—Baghil union board.

Munshi Ahadali Mia.
Munshi Rafetulla Sarkar.
Munshi Kazemuddin Sarkar.
Munshi Abdul Gaffur Mia.
Munshi Jahiruddin Sarkar.
Babu Banomali Adhikary.

Police-station Basail.

I.—Filki union board.

Munshi Mohamadali Sarkar.
Munshi Abdul Hamid Khan.
Munshi Momtajali Bhuya.
Munshi Mahamad Ali Talukdar.
Munshi Abdul Rahaman Sarkar.
Munshi Anserali Talukdar.

II.—Kawaljani union board.

Maulvi Azaharuddin Talukdar.
Munshi Moniruddin Sarkar.
Munshi Abdul Samad Mirdha.
Munshi Majamali Mia.
Munshi Rahijuddin Bhuya.
Munshi Abdul Based Bhuya.

VI.—Kanchanpur union board.

Babu Kunja Behari Sarkar.
Babu Bejoy Chandra Saha.
Maulvi Mofijuddin Khan.
Munshi Abul Kasem Khan.
Munshi Mortujali Khan.
Munshi Taheruddin Mia.

VII.—Basail union board.

Maulvi Yakubali Khan Sur.
Maulvi Abdul Khaleq Almajidi.
Maulvi Mobarak Hossain Mia.
Maulvi Abdul Gaffur Bhuya.
Babu Kritanto Kumar Roy.
Babu Jogesh Lal Saha.

VIII.—Kashil union board.

Munshi Abdul Hakim Mirza.
Munshi Jangu Mirza.
Munshi Majan Ali Khan.
Munshi Naimuddin Sarkar.
Babu Prasanna Kumar De.
Babu Kedar Nath Guha.

IX.—Habla union board.

Doctor Abdur Rahman.
Munshi Fakir Mahmud Mia.
Munshi Talebali Talukder.
Munshi Mukshedali Biswas.
Maulvi Osman Gani Khan, B.L.
Babu Rajani Kanta Bose.

X.—Dubail union board.

Doctor Hafijuddin Ahmed.
Munshi Abdul Mojid Akanda.
Munshi Shah Abdul Gani.
Munshi Dewan Abdul Basir.
Munshi Hazi Ayenuddin Talukdar.
Munshi Formanali Khan.

Police-station Nagarpur.

I.—Deuli union board.

Madhu Sudan Adhikari.
Kazi Abdus Salam.
Abdul Rajjak Khan.
Mukunda Nath Mukhopadhyaya.
Pramatha Nath Bandyopadhyaya.
Haji Manikuddin.

II.—Bharra union board.

Prasanna Kumar Ghosh.
Keshab Ch. Ghosh.
Kasimuddin Sarkar.
Khabiruddin Bepari Talukdar.
Sudhir Kumar Ghosh Choudhury.
Dr. Naimuddin Ahamed.

III.—Shabatpur union board.

Ahamad Ali Mia.
Rohini Kanta Saha.
Naojesh Ali Khan.
Jogesh Chandra Dhar.
Sekendarali Siddique.
Khandakar Ghulam Mustafa.

IV.—Louhati union board.

Surendra Mohan Chakraborty.
Prafulla Kumar Sarkar.
Munshi Asrafali Khan.
Munshi Ghulam Mustafa Khan.
Maulvi Abdul Aziz.

V.—Goyhatta union board.

Nityananda Sarkar.
Kailash Ch. Sarma.
Naba Kanta Chakraborty.
Hazi Korbanali Munshi.
Bhabesh Ch. Roy.
Kailash Ch. Roy.

VI.—Nagarpur union board.

Maulvi Abdul Wahid.
Jogesh Ch. Neogi.
Maulvi Abdul Halim.
Nanilal Saha Poddar.
Nagendralal Choudhury.
Satish Ch. Saha, B.A.

VII.—Salimabad union board.

Ghulam Joynal Abdin.
Abdar Khan.
Kazi Eklasuddin.
Rekatullah Mia.
Lalit Mohan Chakrabarty.
Monmohan Sarkar.

VIII.—Daftair union board.

Juran Sheikh.
Reajuddin Sarkar.
Khandakar Hazi Ainuddin.
Maulvi Mainuddin.
Sadagar Mondal.
Harendra Kumar Ghosh.

IX.—Bhadra union board.

Jatindra Mohan Singh.
Kamakshyanath Bhoumik.
Md. Adam Munshi.
Amar Govinda Chakraborty.
Md. Ibrahim Mollah.
Ismailuddin Munshi.

X.—Mamudnagar union board.

Keramat Bepari.
Maniruddin Sarkar.
Ramesh Chandra Bhadra.
Ekimali Sarkar.
Sabedali Munshi.
Munsherali Mia.

XI.—Mokna union board.

Bhabendra Mohan Roy Choudhury.
Sarada Charan Guha.
Pramath Nath Sanyal.
Manindra Mohan Roy Choudhury.
Md. Sariatullah Sarkar.
Jonabali Sarkar.

XII.—Pakutia union board.

Rabindra Mohan Roy Choudhury.
Abdul Gani Khan.
Wazedali Mia.
Manindra Kumar Roy Choudhury.
Ainuddin Mia.
Jatindra Kumar Das Gupta.

Police-station Mirzapur.

II.—Jamurki union board.

Abdul Hamid Khan Choudhuri.
Ali Amjad Khan Choudhuri.
Haridas Choudhuri.
Habibar Rahman Khan Eusufji.
Megh Lal Saha Poddar, B.SC., M.B.
Motilal Saha.

III.—Mirzapur union board.

Jagadish Ch. Gupta Bakshi.
Dr. Abdul Rahman Mia.
Gurudas Sarkar.
Sultan Ali Sarkar.
Sachindra Kumar Poddar.
Madhusudan Poddar.

IV.—Banail union board.

Parbati Charan Guha.
Md. Sultanali Khan.
Abdul Hamid Mia.
Abdur Rahman Talukdar.
Nibaran Chandra Datta.
Akshoy Kumar Mondal.

V.—Anaitara union board.

Girija Mohan Bhattacherjee, B.A.
Keshab Chandra Bose.
Asrafuddin Sarkar.
Ahasanuddin Mia.
Ghulam Kazed Talukdar.
Esaque Bepari.

VI.—Warshi union board.

Kshetra Nath Bose.
Nobaran Ch. Roy.
Sailesh Ch. Chakraborty.
Amritalal Sarkar.
Dr. Abdus Samed Khan.
Moslem Khan.

Police-station Kalihati.

II.—Salla union board.

Syed Amirulla.
Khabiruddin Sarkar.
Jadunath Pal.
Mohini Kanta Chakraborty.
Babulla Sarkar.
Hachanali Kabyanidhi.

IV.—Narundia union board.

Afajuddin Talukdar.
Surendra Kumar Saha.
Insan Ali Talukdar.
Reajuddin Choudhury.
Jaladhar Talukdar.
Ganesh Chandra Talukdar.

V.—Kalihati union board.

Satish Chandra Bose.
Alauddin Sah Fakir.
Khetra Mohan Chakrabarty.
Harendra Kumar Saha Choudhury.
Chand Mohan Pal.
Rohini Kanta Sen.

VI.—Sahadebpur union board.

Abdul Karim Mian.
Jadav Chandra Munshi.
Rohini Kanta Deb.
Hemendra Mohan Khasnabis.
Mosleuddin Siddiki.
Nagarbasi Kar.

VII.—Kakdahara union board.

Kasimuddin Talukdar.
Mohini Mohan Choudhury.
Maulvi Sultan Mahmud Khan.
Kayemuddin Sarkar.
Suresh Chandra Goswami.
Harendra Chandra Guha.

VIII.—Balla union board.

Habibar Rahaman Talukdar.
Mahammad Hossain Mian (Doctor).
Refatulla Sarkar.
Ajgar Ali Talukdar.
Mafijuddin Talukdar.
Sultan Hossain Sarkar.

IX.—Bhandeswar union board.

Ahammad Ali Mian (Dagi).
Hazi Maulvi Khondkar Abdul Joad.
Shyam Sundar Das.
Darogali Sarkar.
Moslemuddin Munshi.
Abdul Basad Khan.

Police-station Ghatail.

I.—Deulabari union board.

Saman Ali Dewan.
Pran Nath De Talukdar.
Moazzem Hossain.
Maulvi Abdur Rahman.
Based Ali Sarkar.
Mayejuddin Sarkar.

II.—Ghatail union board.

Jasimuddin Ahmed.
Salimuddin Talukdar.
Purna Chandra Chakraborty.
Barada Charan Roy.
Mayejuddin Ahammad.
Dinesh Chandra Chanda.

III.—Jamuria union board.

Kritanta Kumar Mitra.
Debendra Bhusan Mitra.
Abdul Ajih Mian.
Maulvi Abdus Sobahan.
Nityananda Saha Talukder.
Ahammad Ali Khan.

IV.—Panchtikri union board.

Maulvi Eakubali Talukdar.
Md. Abdul Jalil.
Maulvi Kashemali Talukdar.
Abul Hossain Talukdar.
Sonaulla Sarkar.
Md. Israil Hossain Khan.

V.—Dighalkandi union board.

S. M. Khademal Islam.
Munshi Yakubali.
Pagu Talukdar.
Fayejuddin Sarkar.
Parashali Talukdar.
Abdul Majed Khan.

VI.—Digar union board.

Maulvi Khondkar Hatemali.
Brajendra Kumar Pal.
Ibrahimuddin Ahmed.
Munshi Joaher Ali.
Jamiruddin Ahmed (Doctor),
Babu Jadulal Roy Choudhury.

Police-station Gopalpur.

I.—Mushuddi union board.

Munshi Sekandar Ali Ahamad.
Munshi Shahbat Ullah Sarkar.
Munshi Zainuddin Ahmad.
Munshi Salimuddin Sikdar.
Munshi Taheruddin Sarkar.
Munshi Taharuddin Sarkar.

II.—Hadira union board.

Munshi Ismail Hossain Ahmed.
Haji Gedu Sarkar.
Munshi Mahammad Abdul Hamid Talukdar
Munshi Kazemuddin Talukdar.
Munshi Iman Ali.
Munshi Rahimuddin Sarkar.

III.—Jhawail union board.

Maulvi Abdus Sobhan Choudhury.
Maulvi Abdur Rahman Talukdar.
Maulvi Abdul Bari Jamali, B.A.
Munshi Basiruddin Sarkar.
Munshi Md. Hosain Ali Talukdar.
Munshi Marfat Ali Sarker.

IV.—Gopalpur union board.

Babu Basanta Kumar Chanda Talukdar.
Munshi Alauddin Ahmed.
Maulvi Golam Nabi Khan.
Munshi Abbas Ali Sarkar.
Babu Umesh Chandra Singha.
Munshi Ebadar Ali Khan.

V.—Dhopakandi union board.

Babu Bhupati Mohan Roy Choudhury.
Munshi Khandokar Yousaf Ali.
Babu Jnanendra Chandra Kundu.
Munshi Samiruddin Akand.
Babu Suresh Chandra Chakravarty.
Munshi Korpan Ullah Ahmed.

VI.—Suti union board.

Munshi Jafiruddin.
Munshi Naimuddin Sarkar.
Babu Sarat Chandra Datta.
Munshi Abdul Aziz Talukdar, Doctor.
Babu Nilkamal Pandit.
Munshi Zakeruddin Sarkar.

VII.—Hemnagar union board.

Babu Surjya Kanta Ganguli.
Munshi Ebrahim Talukdar.
Maulvi Hatemali Khan, B.A.
Babu Surendra Lal Goswami.
Munshi Monhazuddin Talukdar.
Munshi Jamsher Ali Meah.

X.—Falda union board.

Doctor Bepin Behari Datta.
Munshi Jobed Ali Talukdar.
Munshi Mohammad Shahbat Ali.
Munshi Saman Ali Sarkar.
Munshi Easin Ali Sarkar.
Munshi Intaz Ali Sarkar.

XI.—Mirjapur union board.

Munshi Khondakar Hatem Ali.
Babu Kali Nath Routh.
Munshi Nawab Ali Khan.
Munshi Alifat Sarkar.
Munshi Shaduruddin Ahmed.
Maulvi Nasimuzzaman.

XII.—Gobindashi union board.

Maulvi Akbar Hossain Meah.
Munshi Golam Mautuza Talukdar.
Munshi Shahabuddin Sarkar.
Babu Jadab Chandra Bashak.
Maulvi Afazuddin Ahmed.
Munshi Bahar Ullah Sarkar.

XIII.—Sealkhole union board.

Babu Umesh Chandra Ghosh.
Maulvi Nawab Ali Talukdar.
Babu Atul Chandra Bose.
Maulvi Ebrahim Khan, M.A., B.L.
Babu Bharat Chandra Malakar.
Munshi Miaullah Sarkar.

XIV.—Nikrail union board.

Babu Akshoy Kumar Guha.
Munshi Ahmed Ali Sarkar.
Munshi Kazemuddin Sarkar.
Babu Tarani Kanta Bhowmik.
Babu Brajendra Kishore Bashak.
Munshi Shamser Ali Fakir.

Police-station Madhupur.

I.—Birtara union board.

Maulvi Ramjan Ali Talukdar.
Maulvi Md. Yonnas Ali.
Munshi Jonab Ali Fakir.
Babu Surendra Chandra Talukdar.
Munshi Sharafat Ali Talukdar.
Munshi Shahed Ali Mandal.

II.—Dhanbari union board.

Maulvi Mir Mahatab Ali.
Babu Shashi Mohan Talukdar.
Maulvi Golam Ahmed Sidhique.
Munshi Ekindali Sarkar.
Munshi Mir Abdus Samad.
Munshi Mir Ayub Ali.

III.—Paiska union board.

Maulvi Mahammad Habibur Rahman.
Maulvi Mahammad Ali.
Munshi Md. Nawsher Ali.
Munshi Kazimuddin Miah.
Munshi Haji Mogal Bakal.
Munshi Shahebullah Sarkar.

IV.—Dhopakhali union board.

Munshi Haji Barkat Uddin Sarkar.
Babu Krishna Chandra Datta.
Munshi Rajab Ali Sarkar.
Munshi Rajab Ali Sarkar.
Babu Tara Kanta Das.
Munshi Nobab Ali Sarkar.

V.—Chakanda Golabari union board.

Doctor Jamsher Ali Talukder.
Munshi Abdul Jobbar Talukdar.
Babu Makhan Lal Chakraborty.
Babu Hriday Nath Bhoumik.
Munshi Asar Ali Sarkar.
Babu Chuni Lal Barman.

VI.—Madhupur union board.

Babu Durgesh Chandra Neogi.
Munshi Mansoor Ali.
Hafez Maulvi Abdul Majid
Babu Purna Chandra Dey.
Munshi Nabab Ali Fakir.
Munshi Samiruddin Sarkar.

(*b*) Under sub-section (*3*) of section 6 of the Bengal Village Self-Government Act, 1919 (Bengal Act V of 1919), the following gentlemen have been appointed by the District Magistrate of Mymensingh to be members of the undermentioned union boards in the Tangail subdivision of the Mymensingh district:—

Tangail subdivision.

Police-station Tangail.

I.—Magra union board.

Babu Debidas Pal.
Babu Pramatha Nath Guha.
Munshi Fakir Mahmud Sarkar.

II.—Gala union board.

Munshi Mahamad Ali Talukdar.
Munshi Ilimuddin Sirkar.
Maulvi Jalaluddin Sarkar.

III.—Gharinda union board.

Babu Jotindra Kumar Bose.
Maulvi Fazlar Rahman Khan.
Maulvi Abdul Aziz Sarkar.

IV.—Karatia union board.

Babu Peari Mohan Guha.
Maulvi Syed Nurul Huda.
Maulvi Abdus Sovan Khan.

V.—Pathrail union board.

Babu Nalini Kanta Sarkar, M.A.
Babu Surendra Mohan Ghatak.
Babu Kalidas Chakrabarty, B.A.

VI.—Delduar union board.

Munshi Abdul Halim Khan.
Munshi Lal Khan Mia.
Babu Manindra Chandra Bhowmic.

VII.—Fazilhati union board.

Babu Rajani Kanta Chakravarty.
Babu Nani Gopal Saha, son of Daguram Saha.
Munshi Kalo Sarkar.

VIII.—Elashin union board.

Maulvi Akkel Mahmud Bhuya.
Babu Tarak Bandhu Ganguly.
Babu Jatindra Kishore Roy.

IX.—Atia union board.

Babu Aswini Kumar Gossami.
Babu Tarakeswar Biswas.
Munshi Faizuddin Sarkar.

X.—Silimpur union board.

Doctor Abdur Rahaman Mia.
Mulfat Ali Khan Sarang.
Babu Kishori Mohan Saha.

XII.—Danya union board.

Babu Sasadhar Roy.
Babu Jagadish Chandra Roy.
Munshi Moslem Munshi.

XIV.—Baghil union board.

Babu Kunja Behari Saha.
Babu Kailash Chandra Pal.
Munshi Omarali Sarkar.

Police-station Basail.

I.—Filki union board.

Maulvi A. K. Md. Edris Khan.
Munshi Rajali Khan Talukdar.
Babu Surendra Mohan Ghosh.

II.—Kawaljani union board.

Munshi Hazi Abbas Ali.
Babu Akshoy Kumar Bose.
Babu Manindra Kumar Saha.

VI.—Kanchanpur union board.

Munshi Mojaharali Khan.
Munshi Dinnat Ali.
Babu Mohesh Chandra Sil.

VII.—Basail union board.

Babu Ananto Kumar Roy, M.A.
Babu Sudhangsu Mohan Basu.
Maulvi Mayejuddin Ahmed.

VIII.—Kashil union board.

Munshi Moyejuddin Talukdar.
Munshi Aftabuddin Kasnavis.
Babu Shyama Charan Pal.

IX.—Habla union board.

Babu Nadiar Chand Adhikary.
Babu Debendra Kumar Saha.
Kabiraj Nur Mahamad Mia.

X.—Dubail union board.

Babu Tarak Chandra Biswas.
Babu Dinesh Chandra Kar.
Munshi Dewan Isahaque Hossain.

Police-station Nagarpur.

I.—Deuli union board.

Dinesh Chandra Guha.
Kefatullah Munshi.
Dewan Hatemali.

II.—Bharra union board.

Wasimuddin Ahamad.
Gour Chandra Vidyavagish.
Madhab Ch. Das.

III.—Sahabatpur union board.

Ambika Dayal Ghosh.
Radhikalal Goswami, B.A.
Md. Ismail Hussain Khan.

IV.—Louhati union board.

Maulvi Abdul Haque.
Mansurali Sarkar of Dhalla.
Bepin Ch. Sarkar.

V.—Goyhatta union board.

Surendra Mohan Saha.
Nassherali Khan.
Sirajuddin Ahamad.

VI.—Nagarpur union board.

Maulvi Md. Alimuddin Nasirabadi.
Taranath Acharjee Kaviratna.
Maulvi Md. Abdul Bari.

VII.—Salimabad union board.

Md. Abdul Salam.
Dwijendra Kumar Saha.
Lalit Mohan Bose.

VIII.—Daftiar union board.

Srikanta Sarkar.
Kaliprasanna Sarkar.
Darogali Sarkar.

IX.—Bhadra union board.

Munshi Sabdal Khan.
Durga Mohan Kar.
Purnananda Roy Kappali.

X.—Mamudnagar union board.

Suresh Chandra Guha Mazumder.
Suresh Ch. Bakshi.
Susil Kumar Mandal.

XI.—Mokna union board.

Abdul Rahman Sarkar.
Sona Khan.
Dr. Abinash Ch. Choudhury.

XII.—Pakutia union board.

Bejoyananda Bhattacherjee.
Samiruddin Khan.
Samaduddin Choudhury.

Police-station Mirjapur.

II.—Jamurki union board.

Maulvi Abul Hussain Choudhury.
Jalaluddin Bhuya.
Dr. Brojabashi Saha.

III.—Mirjapur union board.

Maulvi Md. Tamizuddin.
Khandakar Abdul Gaffur.
Babu Jatindra Mohan Sanyal.

IV.—Banail union board.

Dinesh Ch. Ghatak.
Sibendra Nath Bhattacherjee.
Muradali Sarkar.

V.—Anaitara union board.

Kshetranath Sarkar, B.A.
Manindra Mohan Majumder.
Abdul Sarkar.

VI.—Warshi union board.

Warish Khan Sareng.
Naziruddin Ahamad *alias* Nazir Mia.
Kalinath Bhattacharjee.

The following voters may be appointed by the District Magistrate under section 6 (*4*) of the Act to be members of the following union benches:—

Police-station Nagarpur.

IV.—Louhati union board.

Basanta Kumar Sarkar.

Police-station Kalihati.

II.—Salla union board.

Babu Haridas Chakrabarty, B.A.
Babu Durgesh Chandra Bhattacherjee.
Kader Ali Sarkar.

IV.—Narandia union board.

Babu Jnanendra Prosad Guha Roy.
Babu Pran Nath Saha.
Munshi Mujaffar Sarkar.

V.—Kalihati union board.

Babu Anath Bandhu Chakraborty.
Syed Moazzem Hossain.
Maulvi Ahammad Ali.

VI.—Shahadebpur union board.

Babu Srish Chandra Bhattacherjee.
Babu Bhabani Nath Das.
Maulvi Md. Tozammel Huque.

VII.—Kokdahara union board.

Babu Gopinath Pal, B.A.
Babu Ananta Kumar Neogi.
Najibar Rahaman Khan.

VIII.—Balla union board.

Babu Manmatha Nath Saha, B.SC.
Pramath Nath Bhoumik.
Syed Golam Hossain.

IX.—Bhandeswar union board.

Dhirendra Nath Nag.
Nabadwip Chandra Karmakar.
Maulvi Meer Moksed Ali.

Police-station Ghatail.

I.—Deulabari union board.

Jalaluddin Sarkar.
Mahim Chandra Das.
Mahammad Abdul Hamid Mian.

II.—Ghatail union board.

Enayetulla Talukdar.
Shiraj Ali Talukdar.
Babu Jamini Kisore De Joardar.

III.—Jamuria union board.

Babu Manoranjan Neogi.
Munshi Abdul Hamid Talukdar.
Md. Asab Ali Talukdar.

IV.—Panchtikri union board.

Nalini Mohan Sarkar.
Hazi Bahirulla Sarkar.
Fatik Chandra Ghosh.

V.—Dighalkandi union board.

Babu Gangadhar Pal.
Babu Rameswar Roy.
Babu Lalit Chandra Shome.

VI.—Digar union board.

Babu Madhusudhan Pal Choudhury.
Babu Mahim Chandra Guha.
Abdul Khalek Siddiki.

Police-station Gopalpur.

I.—Musuddi union board.

Munshi Aftabuddin Ahmed.
Munshi Hatem Ali Talukdar.
Babu Madhab Chandra Shaha.

II.—Hadira union board.

Babu Keshab Chandra Chanda.
Munseb Ali Sarkar.
Munshi Sona Ulla Talukdar.

III.—Jhawail union board.

Munshi Josimuddin Talukdar.
Babu Promotha Nath Shaha.
Babu Bisweswar Dhar.

V.—Dhopakandi union board.

Babu Raman Krishna Goswami.
Munshi Basiruddin Sarkar.
Maulvi Muhammad Alauddin.

VI.—Suti union board.

Babu Rajani Kanta De.
Munshi Khondakar Ismail Hussain.
Munshi Jamiruddin Sarkar.

VII.—Hemnagar union board.

Babu Girish Chandra Rakshit.
Munshi Jasimuddin Talukdar.
Maulvi Eshaq Uddin Mia.

X.—Falda union board.

Babu Jogendra Nath Das.
Babu Surendra Nath Bhaduri.
Munshi Yonnos Ali Sarkar.

XI.—Mirjapur union board.

Munshi Naya Mia.
Munshi Md. Motaher Ali Sarkar.
Babu Nripendra Narayan Roy.

XII.—Gobindasi union board.

Babu Hriday Nath Bhoumik.
Babu Dinesh Chandra Deb Roy, B.L.
Munshi Aran Sarkar.

XIII.—Sealkhola union board.

Babu Nripendra Nath Dutta.
Maulvi Md. Ali Khan.
Munshi Mayezuddin Khandkar.

XIV.—Nikrail union board.

Doctor Amrita Lal Bhoumik.
Maulvi Momtazuddin.
Jagadish Chandra Bhoumik.

Police-station Madhupur.

I.—Birtara union board.

Babu Madhabendu Poddar.
Munshi Tomejuddin Khan.
Johiruddin Sarkar.

II.—Dhanbari union board.

Maulvi Safiruddin.
Maulvi Khandkar Matarsim Billah.
Babu Girija Kanta Deb.

III.—Paiska union board.

Munshi Umed Ali Sarkar.
Munshi Aman Ali Khan.
Babu Manindra Chandra Singha.

IV.—Dhopakhali union board.

Munshi Molfat Ali Khan.
Munshi Salimuddin Sarkar.
Babu Jatindra Nath Sen.

V.—Chakanda Golabari union board.

Babu Jadab Chandra Sen.
Munshi Moizuddin Sarkar.
Munshi Taseruddin Sarkar.

VI.—Madhupur union board.

Munshi Ayenuddin Sarker.
Munshi Ismail Ahmed.
Babu Chandra Nath Taipoddar.

T. M. Dow, *District Magistrate*.

Dacca, the 11th February 1935.

No. 1280-84M.—It is hereby notified for general information that—

(*a*) Under sub-section (*2*) of section 6 of the Bengal Village Self-Government Act, 1919 (Bengal Act V of 1919), the following gentlemen have been duly elected to be members of the Tumulia union board in police-station Rupganj in the Narayanganj subdivision of the Dacca district:—

Maulvi Abdus Samad Sarkar.
Mr. Ali Kosta.
Babu Raj Mohan Baroi.
Mr. Charles Perara.
Munshi Mohibur Rohman.
Munshi Anwaruddin Ahmad.

(*b*) Under sub-section (*3*) of section 6 of the Act, the following gentlemen have been appointed by me to be members of the said union board:—

Mr. Lorry Frazer.
Munshi Jaimat Ali.
Babu Purna Chandra Dutta.

No. 1280-84M.—It is hereby notified for general information that—

(*a*) Under sub-section (*2*) of section 6 of the Bengal Village Self-Government Act, 1919 (Bengal Act V of 1919), the following gentlemen have been duly elected to be members of the Danga union board in police-station Rupganj in the Narayanganj subdivision of the Dacca district:—

Maulvi Muhammad Ehisan.
Babu Biraj Mohan Singha.
Munshi Abdul Jalil.
Munshi Raham Ali Sarker.
Munshi Muhammad Sharafat Ali.
Babu Shyama Charan Saha.

(*b*) Under sub-section (*3*) of section 6 of the Act, the following gentlemen have been appointed by me to be members of the said union board:—

Babu Raj Mohan Pal.
Munshi Wazaddi.
Maulvi Abdul Kuddus.

No. 1285-88M.—It is hereby notified for general information that—

(*a*) Under sub-section (*2*) of section 6 of the Bengal Village Self-Government Act, 1919 (Bengal Act V of 1919), the following gentlemen have been duly elected to be members of the Norsingdi union board in police-station Norsingdi in the Narayanganj subdivision of the Dacca district:—

Babu Man Mohan Poddar, B.A.
Dr. Abdul Wadud.
Babu Shailendra Nath Roy.
Munshi Gayasuddin Bhuyan.
Babu Pratap Chandra Das.
Munshi Nayebali Mollah.

(*b*) Under sub-section (*3*) of section 6 of the Act, the following gentlemen have been appointed by me to be members of the said union board:—

Munshi Belayet Hossain.
Babu Krishnadhan Saha.
Babu Prasanna Kumar Chakraverty.

B. C. PRANCE, *District Magistrate.*

Faridpur, the 11th February 1935.

No. 1093J.—It is hereby notified for general information that—

(*a*) Under sub-section (*2*) of section 6 of the Bengal Village Self-Government Act, 1919 (Bengal Act V of 1919), the following gentlemen have been duly elected to be members of the Nagarkanda union board in police-station Nagarkanda of the Sadar subdivision of the Faridpur district:—

Babu Upendra Chandra Basu Roy.
Serajaddi Sarif.
Munshi Muhammad Sadan.
Abdul Motalep Mia.
Goyjaddi Fakir.
Babu Hira Lal Banerjee.

(*b*) Under sub-section (*3*) of section 6 of the Act, the following gentlemen have been appointed by the District Magistrate of Faridpur to be members of the said union board:—

Babu Krishna Chandra Sarkar.
Babu Debendra Nath Malo.
Abdul Gafur Molla.

No. 1129J.—It is hereby notified for general information that, under section 13 of the Bengal Village Self-Government Act (Act V of 1919), Babu Sudhir Chandra Roy has been duly elected to be a member of the Boalmari union board in police-station Bhushna in the Sadar subdivision of the Faridpur district, *vice* Babu Satish Chandra Roy, deceased.

Faridpur, the 15th February 1935.

No. 590J.—It is hereby notified for general information that—

(*a*) Under sub-section (*2*) of section 6 of the Bengal Village Self-Government Act, 1919 (Bengal Act V of 1919), the following gentlemen have been duly elected to be members of the Jamalpur union board in police-station Baliakandi of the Goalundo subdivision of the Faridpur district:—

Babu Sudhangshu Kumar Banerjee.
Munshi Abdul Rahim Meah.
Munshi Khoyrat Ali Meah.
Munshi Golam Hossain Meah.
Dr. Abinash Chandra Raha.
Munshi Meser Sardar.

(*b*) Under sub-section (*3*) of section 6 of the Act, the following gentlemen have been appointed by the District Magistrate of Faridpur to be members of the said union board:—

Babu Pravash Chandra Chatterji, B.A.
Babu Kutiswar Mandal.
Maulvi Abdur Rashid.

A. E. PORTER, *District Magistrate.*

Presidency Division—Calcutta.

No. 346R.G.—12th February 1935. — Babu Gyan Ranjan Mukherjee, Sub-Deputy Collector, Sadar, Nadia, is granted leave on average pay from the 19th December 1934 to the 5th January 1935, inclusive, under rule 81 (*b*) (*ii*) of the Fundamental Rules.

No. 97J.G.—13th February 1935. — It is hereby notified for general information that in exercise of the powers conferred on me by rule 691A of the Bengal Jail Code, Volume I, 6th edition, I appoint Babu Bisweswar Bhattacherjee, Professor of Sanskrit, K. N. College, Berhampore, and Maulana Ayub, Head Maulvi, K. N. Collegiate School, Berhampore, to be honorary religious teachers for imparting moral instructions to the male prisoners in the Berhampore Jail in the district of Murshidabad for a period of two years with effect from the date of this notification. The Muhammadan teacher should also conduct the Jummah prayer for Muhammadan prisoners.

A. J. DASH, *Commissioner* (*offg.*).

Krishnagar, the 15th February 1935.

No. 704L.S.-G.—It is hereby notified for general information that, under section 13 of the Bengal Village Self-Government Act, 1919 (Bengal Act V of 1919), read with rule 35 of the rules for the election and the appointment of members, etc., of the union boards under the said Act, Munshi Hekmatulla has been duly elected to be a member of the Mira union board within Kaliganj police-station in the Sadar subdivision of the Nadia district, *vice* Munshi Mahammad Abdul Jabbar, resigned.

S. BANERJEE, *District Magistrate.*

Bengal Marwari Association Constituency of the Bengal Legislative Council.

Calcutta, the 13th February 1935.

Rai Ram Dev Chokhany Bahadur, who was elected to the Bengal Legislative Council by the Bengal Marwari Association constituency to fill the vacancy caused by the resignation of Sir Badridas Goenka, Kt., C.I.E., lodged with me on the 11th instant his return of election expenses with the declarations under sub-rule (*3*) of rule 19 of the Bengal Electoral Rules. The return and the declarations may be inspected at my office at 134, Machuabazar Street, between the hours of 1 and 4 p.m. on working days from the date of this notice to the 28th February 1935 on payment of a fee of one rupee.

K. N. GUTGUTIA, *Returning Officer.*

Indian Jute Mills Association Constituency of the Bengal Legislative Council.

Calcutta, the 15th February 1935.

Notice is hereby given, under the provisions of No. 19 (*5*) of the Bengal Electoral Rules, that the return of election expenses and the declaration made in respect thereof, in regard to his candidature for election as a representative of the Indian Jute Mills Association Constituency of the Bengal Legislative Council, were duly lodged by Mr. J. R. Walker with me on the 14th February 1935. Such return and declaration may, on payment of a fee of one rupee, be inspected on application to me in my office between the hours of 11 a.m. and 4 p.m. for one week from this date.

A. C. DANIEL, *Returning Officer.*

Orders by the Deputy Inspector-General of Police, Intelligence Branch.

Calcutta.—No. 272.—13th February 1935. —Qazi Abdur Rashid, Inspector, is granted 3 months' leave on average pay, on medical certificate, with effect from 1-2-1935, a.m.

Babu Radharaman Chatarji, Inspector, is granted 1 month's leave on average pay in extension of the leave already granted to him.

Sub-Inspector Amarendra Kumar Sen is appointed to act as Inspector with effect from 2-2-1935, a.m., to fill a temporary vacancy sanctioned in Government order No. 198Pl.S., dated the 7th April 1934.

C. E. S. FAIRWEATHER,
Deputy Inspector-General of Police (*offg.*).

Rajshahi Division—Jalpaiguri.

No. 472M.—7th February 1935.—In exercise of the powers conferred on me by section 19 (*2*) of the Local Self-Government Act (Bengal Act III of 1885) as amended by Act V (B.C.) of 1908 and acting under the orders of the Local Government given in the exercise of the administrative control vested in them by section 29B of the said Act, I appoint Mr. E. R. Lloyd to be a member of the Alipur Duar local board in the district of Jalpaiguri, *vice* Mr. L. A. Lawford, resigned.

No. 489J.—11th February 1935.—It is hereby notified for general information that, under rule 20 (*b*) of the rules for the management of hospitals and dispensaries under the supervision of the Government of Bengal, the following gentlemen are appointed to be members of the committee for the management of the Bhaluka dispensary in the district of Malda:—

Babu Monomohan Das Gupta.
Babu Gobardhan Mandal.
Babu Jiban Krishna Sen.
Babu Girija Nath Singh.
Babu Ranjit Lal Chaudhury.
Babu Tormall Marwari.
Maulvi Ayib Ali Biswas.

No. 515M. — 13th February 1935.— In exercise of the power conferred by clause (*2*) of section 139 of the Bengal Local Self-Government Act, 1885 (Bengal Act III of 1885), as amended by Act I of 1914, I confirm the following by-laws which have been framed by the district board of Jalpaiguri under clause (*1*) of the said section:—

By-laws.

By-law 60.—Every baker or confectioner who keeps for sale any bread, sweetmeat or other prepared articles of food and every vendor or hawker of such articles shall keep the same in a glass case or other covered receptacle so as to protect them from dust, ashes, rubbish, spiders, flies or other insects and shall keep such glass or covered receptacle in a clean and wholesome condition.

Exemption.—Chira, Muri, Murki, Khai and Moa may be sold in covered bamboo baskets.

The penalty for infringement of the by-law shall be a fine not exceeding the sum of Rs. 10 for the first offence, and in the case of a second or subsequent conviction for a similar offence, a fine not exceeding Rs. 50, and in case of a continuing offence, a fine not exceeding Rs. 5 for each day during which such offence is continued after conviction therefor.

By-law 61.—No person shall sell for human consumption any uncured dry fish or any fish which though not dried has become unfit for human consumption.

The penalty for infringement of the by-law shall be a fine not exceeding the sum of Rs. 10 for the first offence and in the case of a second or subsequent conviction for a similar offence, a fine not exceeding Rs. 50, and in case of a continuing offence, a fine not exceeding Rs. 5 for each day during which such offence is continued after conviction therefor.

No. 532J.—13th February 1935.—Mr. S. G. Macdonald, Sub-Deputy Collector, on leave, is posted temporarily to Serajganj subdivision of the Pabna district to work in the general line.

The posting is made in the public interest.

No. 555J.—14th February 1935. — Babu Kshetra Mohan Mandal, Sub-Deputy Collector, Gaibandha, in the district of Rangpur, was allowed leave on average pay for eleven days from the 23rd December 1934 to the 2nd January 1935, under rule 81 (*b*) (*ii*) of the Fundamental Rules, in extension of the leave already granted to him in this office notification No. 4253J., dated the 14th December 1934.

Erratum.—No. 557M.—15th February 1935. —In this office notification No. 337M., dated 28th January 1935, published at page 322 of the *Calcutta Gazette*, Part I, dated 7th February 1935, *for* the words "the Circle Officer of the Parbatipur Circle" *read* "the Circle Officer of the Patnitola Circle."

No. 573J.—15th February 1935. — Maulvi Kafiluddin Ahmad, Sub-Deputy Collector, Rajshahi Division, is posted to Rangpur Sadar to work in the general line.

The posting is made in the public interest.

F. W. ROBERTSON, *Commissioner.*

Registered No. C207

The Calcutta Gazette

THURSDAY, FEBRUARY 21, 1935.

PART IA

Orders and Notifications by the Government of India republished for general information.

HOME DEPARTMENT.

NOTIFICATIONS.

JUDICIAL.

New Delhi, the 4th February 1935.

No. F. 1244/34.—The Honourable Mr. Justice D. C. Patterson, I.C.S., a Judge of the High Court of Judicature at Fort William in Bengal, is granted leave from the 1st April to the 29th August 1935, both days inclusive, namely, leave on full allowances for 5 days and leave on half allowances for the remaining period.

No. F. 1244/34/I.—The Honourable Mr. Justice C. Bartley, I.C.S., Barrister-at-Law, a Judge of the High Court of Judicature at Fort William in Bengal, is granted leave on half allowances from the 27th April to the 29th August 1935, both days inclusive.

No. F. 1244/34/II.—The Honourable Mr. Justice J. R. E. Cunliffe, Kt., Barrister-at-Law, a Judge of the High Court of Judicature at Fort William in Bengal, is granted leave from the 27th April to the 29th August 1935, both days inclusive, namely, leave on full allowances for 2 months and leave on half allowances for the remaining period.

T. SLOAN,
Joint Secy. to the Govt. of India.

FOREIGN AND POLITICAL DEPARTMENT.

NOTIFICATION.

New Delhi, the 7th February 1935.

No. 97-G.—With reference to Notification No. 62-G., dated the 16th January 1935, the provisional recognition of the appointment of Monsieur P. Dubois as Consul for France at Calcutta in charge of the Consulate-General has been confirmed by His Majesty's Government.

H. A. F. METCALFE,
Foreign Secy. to the Govt. of India.

NAVY DEPARTMENT.

New Delhi, the 9th February 1935.

No. 8.—The following promotions are made, subject to His Majesty's approval:—

ROYAL INDIAN NAVY.

Engr. Lieut.-Comdr. to be Engr.-Comdr.

Dated 24th Nov. 1934, *vice* Engr.-Comdr. S. J. Fenner, R.I.N., *retired*:—

A. E. F. Orchard.

* * *

G. R. F. TOTTENHAM,
Secy. to the Govt. of India.

LEGISLATIVE DEPARTMENT.

NOTIFICATIONS.

New Delhi, the 5th February 1935.

No. F. 139/35-C. & G. (I).—In exercise of the powers conferred by rule 15 of the Council of State Electoral Rules the Governor General in Council is pleased to direct that the following further amendments shall be made in the Council of State (Bengal) Electoral Regulations published with the notification of the Government of India in the Legislative Department No. 199, dated the 6th September 1923, namely:—

In sub-regulation (1) of regulation 33 and in sub-regulation (2) of regulation 34 of the said Regulations for the words "Bengal Legislative Council" the words "Government of Bengal in the Legislative Department" shall be substituted.

No. F. 139/35-C. & G. (II).—In exercise of the powers conferred by rule 15 of the Legislative Assembly Electoral Rules the Governor General in Council is pleased to direct that the following further amendments shall be made in the Legislative Assembly (Bengal) Electoral Regulations published with the notification of the Government of India in the Legislative Department No. 185, dated the 17th August 1923, namely:—

In sub-regulation (1) of regulation 49 and in sub-regulation (2) of regulation 50 of the said Regulations for the words "Bengal Legislative Council" the words "Government of Bengal in the Legislative Department" shall be substituted.

L. GRAHAM,
Secy. to the Govt. of India.

LEGISLATIVE ASSEMBLY DEPARTMENT.

NOTIFICATION.

New Delhi, the 6th February 1935.

No. F. 60-I/35-A.—The following order by His Excellency the Viceroy and Governor General, dated Tuesday, the 5th February 1935, is published for general information:—

"In pursuance of the provisions of subsection (2) of section 63C of the Government of India Act, I, Freeman Earl of Willingdon, hereby signify that I approve the election by the Legislative Assembly of Mr. Akhil Chandra Datta as Deputy President of the said Assembly.

WILLINGDON,
Viceroy and Governor General."

NEW DELHI,
The 5th February 1935.

MD. RAFI,
Secy. to the Govt. of India.

FINANCE DEPARTMENT.

NOTIFICATIONS.

New Delhi, the 4th February 1935.

No. F. 4 (46)-R. I./34.—In exercise of the powers conferred by rule 37 and clause (*d*) of rule 44 of the Civil Services (Classification, Control and Appeal) Rules, the Governor-General in Council is pleased to direct that the following further amendments shall be made in the Passage (Subordinate) Rules, 1925, namely:—

In sub-rule (2) of rule 1 of the said Rules, for the words "who was or is hereafter engaged" in clauses (*a*) and (*b*) and for the word "engaged" in clause (*c*) the words and figures "engaged before the 1st February 1935" shall be substituted.

The 6th February 1935.

No. F. 40-V. R. II/34.—The following Resolution by the Secretary of State for India in Council is published for general information:—

In exercise of the powers conferred by subsection (2) of section 96-B of the Government of India Act, the Secretary of State, with the concurrence of the majority of votes at a meeting of the Council held this eighth day of January 1935, hereby makes the following amendments in the Superior Services (India Provident Fund) (Sterling Accounts) Rules, 1934, namely:—

I. For rule 10 of the said Rules the following rules shall be substituted, namely:—

"10. The amount of any advance from the sum standing to the credit of a Government servant governed by these Rules shall be expressed in sterling, and the amount of any such advance shall be paid in sterling or, if the Government servant desires to be paid in rupees, at the rupee equivalent of the sterling amount converted at the current rate of exchange calculated to the nearest half-penny. If instalments towards the repayment of such advance and the interest thereon are paid in rupees, each instalment shall consist of the number of rupees which converted at the current rate of exchange calculated to the nearest half-penny shall be equal to the sterling amount payable on account of such instalment. If such instalments are paid in sterling the amount credited in the subscriber's sterling account shall be the sterling amount actually paid.

10A. (1) The amount of any substitution or withdrawal from the sum standing to the credit of a Government servant governed by these Rules for

the purpose of effecting a policy of life assurance shall be expressed in sterling, and the amount of any such withdrawal shall be paid in sterling, or, if the Government servant desires to be paid in rupees, at the rupee equivalent of the sterling amount converted at the current rate of exchange calculated to the nearest half-penny.

(2) (*i*) If the amount withheld or withdrawn on such a policy has under the rules of the Fund to be paid or repaid to the Fund, the subscriber shall proceed as follows:—

When the policy is a rupee or a sterling policy and the subscriber has to repay the sums withheld or withdrawn himself, he shall

(*a*) if he pays in sterling, pay the amount withheld or withdrawn in sterling, as expressed when the withdrawal was effected, with interest thereon;

(*b*) if he pays in rupees, pay the number of rupees which, converted at the current rate of exchange calculated to the nearest half-penny, is equal to the amount withheld or withdrawn in sterling, as expressed when the withdrawal was effected, with interest thereon.

For the purposes of this sub-rule a subscriber who withheld or withdrew an amount expressed in rupees before the 1st April 1934 shall be assumed to have withheld or withdrawn a sterling amount equivalent to the rupee amount withdrawn converted at the rate of 1*s*. 6*d*.

(*ii*) (*a*) If the Account Officer receives the amount due on a policy in rupees, he will credit the rupee account of the subscriber with the amount of rupees actually received and the sterling account with the sterling equivalent of the amount of rupees actually received converted at the current rate of exchange calculated to the nearest half-penny.

(*b*) If the Account Officer receives payment in sterling for the amount, he will credit the subscriber's sterling account with the amount of that payment and the subscriber's rupee account with the actual rupee proceeds thereof."

II. To sub-rule (1) of rule 9 of the said Rules, the following proviso shall be added, namely:—

"Provided that, if subscriptions are recovered in sterling from emoluments drawn in sterling the amount credited in the subscriber's sterling account shall be the sterling amount actually realised."

III. In sub-rule (1) of rule 4 of the said Rules, for the word "six" in each place in which it occurs, the word "twelve" shall be substituted.

IV. In the schedule to the said Rules for the figure "14" the figure "15" shall be substituted.

And the said amendments shall have effect and be deemed always to have had effect as though they had been made on the 1st April 1934.

No. F.-40-V-(1) R. II/34.—In exercise of the powers conferred by sub-rule (2) of rule 33, rules 37 and 42 and clause (*d*) of rule 44 of the Civil Services (Classification, Control and Appeal) Rules, the Governor General in Council hereby makes the following amendments in the Central Services (India Provident Fund) (Sterling Accounts) Rules, 1934, namely:—

1. For rule 10 of the said Rules the following rules shall be substituted, namely:—

"10. The amount of any advance from the sum standing to the credit of a Government servant governed by these Rules shall be expressed in sterling, and the amount of any such advance shall be paid in sterling or, if the Government servant desires to be paid in rupees, at the rupee equivalent of the sterling amount converted at the current rate of exchange calculated to the nearest half-penny. If instalments towards the repayment of such advance and the interest thereon are paid in rupees, each instalment shall consist of the number of rupees which converted at the current rate of exchange calculated to the nearest half-penny shall be equal to the sterling amount payable on account of such instalment. If such instalments are paid in sterling the amount credited in the subscriber's sterling account shall be the sterling amount actually paid.

10A. (1) The amount of any substitution or withdrawal from the sum standing to the credit of a Government servant governed by these Rules for the purpose of effecting a policy of life assurance shall be expressed in sterling, and the amount of any such withdrawal shall be paid in sterling, or, if the Government servant desires to be paid in rupees, at the rupee equivalent of the sterling amount converted at the current rate of exchange calculated to the nearest half-penny.

(2) (*i*) If the amount withheld or withdrawn on such a policy has under the rules of the Fund to be paid or repaid to the Fund, the subscriber shall proceed as follows:—

When the policy is a rupee or a sterling policy and the subscriber has to repay the sums withheld or withdrawn himself, he shall

(*a*) if he pays in sterling, pay the amount withheld or withdrawn in sterling, as expressed when the withdrawal was effected, with interest thereon;

(*b*) if he pays in rupees, pay the number of rupees which, converted at the current rate of exchange calculated to the nearest half-penny, is equal to the amount withheld or withdrawn in sterling, as expressed when the withdrawal was effected, with interest thereon.

For the purposes of this sub-rule a subscriber who withheld or withdrew an amount expressed in rupees before the 1st April 1934 shall be assumed to have withheld or withdrawn a sterling amount equivalent to the rupee amount withdrawn converted at the rate of 1*s*. 6*d*.

(*ii*) (*a*) If the Account Officer receives the amount due on a policy in rupees, he will credit the rupee account of the subscriber with the amount of rupees actually received and the sterling account with the sterling equivalent of the amount of rupees actually received converted at the current rate of exchange calculated to the nearest half-penny.

(*b*) If the Account Officer receives payment in sterling for the amount, he will credit the subscriber's sterling account with the amount of that payment and the subscriber's rupee account with the actual rupee proceeds thereof."

II. To sub-rule (1) of rule 9 of the said Rules, the following proviso shall be added, namely:—

"Provided that, if subscriptions are recovered in sterling from emoluments drawn in sterling the amount credited in the subscriber's sterling account shall be the sterling amount actually realised."

III. In sub-rule (1) of rule 4 of the said Rules, for the word "six" in each place in which it occurs, the word "twelve" shall be substituted.

IV. In the schedule to the said Rules for the figure "14" the figure "15" shall be substituted.

And the said amendments shall have effect and be deemed always to have had effect as though they had been made on the 1st April 1934.

P. C. TALLENTS,
Secy. to the Govt. of India.

DEPARTMENT OF COMMERCE.

NOTIFICATIONS.

MERCHANT SHIPPING.

New Delhi, the 9th February 1935.

No. 5-M. I. (2)/35.—Mr. A. C. Hopper, Ship Surveyor, Mercantile Marine Department, Calcutta, has been granted leave on average pay for 26 days with effect from the 1st February 1935.

H. Dow,
Joint Secy. to the Govt. of India.

REGISTRATION OF ACCOUNTANTS.

The 9th February 1935.

No. 3 (9)-T. & E. (R. A.).—In exercise of the powers conferred by sub-section (2) of section 144 of the Indian Companies Act, 1913 (VII of 1913), the Governor-General in Council is pleased to direct that the following further amendment shall be made in the Auditor's Certificates Rules, 1932, the same having been previously published as required by the said sub-section, namely:—

To rule 13 of the said Rules, the following Explanation shall be added, namely:—

"Explanation.—A certificate granted at any time during the financial year 1934-35 shall be valid until the 30th June 1935, notwithstanding the fact that it was granted with validity only up to the 31st March 1935."

T. A. STEWART,
Secy. to the Govt. of India.

Registered No. C207

The Calcutta Gazette

THURSDAY, FEBRUARY 21, 1935.

PART IB

Educational Notices.

Presidency Division.

40-1A, Free School Street, Calcutta, the 4th February 1935.

Addenda to the results of the Primary (Maktab) Final Examination, 1934, Jessore district, published in the "Calcutta Gazette", dated the 10th January 1935.

The following candidates are declared to have passed the Primary (Maktab) Final Examination, 1934 :—

(E indicates that the candidate has passed in English.)

Jessore District.

Magura Centre.

Roll. No.	Name.	Division.
	Magura Practising U. P.	
91	Mojaharuddin Molla ..	II
	Hat-dariapur Board U. P.	
94	Tabbas Ali Biswas ..	II

J. G. SEN,
for *Inspector of Schools, Presidency Division.*

University of Dacca.

Ramna, Dacca, the 11th February 1935.

Revised Time-table for the B.T. and L.T. Examinations, 1935.

(In modification of the time-table for the examinations approved under E.C.M., dated 22nd August 1934.)

1935.

Monday, March 4 ..	Moderation of Class Records in Practical Teaching.
Tuesday „ 5 ..	
Wednesday „ 6 ..	
Thursday „ 7 ..	

Time—8 a.m. to 11 a.m.

1935.

Monday, March 18 ..	Educational Psychology.
Tuesday „ 19 ..	Principles of Teaching.
Thursday „ 21 ..	Special subjects (Method of Teaching in special subjects).

Time—8 a.m. to 10 a.m.

1935.

Saturday, March 23 ..	Educational Measurements (Ordinary Course).
Monday „ 25 ..	Physical Life.
Tuesday „ 26 ..	Educational Measurements (Special Proficiency Course).
Monday, April 8 ..	Viva Voce.

N. AHMAD, *Registrar.*

Presidency Division.

NOTIFICATION.

Calcutta, the 12th February 1935.

Examination in the Art and Practice of Teaching.

An examination in the Art and Practice of Teaching for teachers of subjects taught through the medium of English employed in aided and unaided secondary schools in the Presidency Division will be held on the 12th April 1935 at Calcutta (the exact place will be notified to candidates hereafter).

The examination for teachers of all subjects taught through the medium of vernacular and oriental classical languages of secondary schools will also be held at the centres noted below on the dates mentioned against each:—

I. Krishnagar Collegiate School (for candidates from Nadia and Murshidabad districts)—8th April 1935.

II. Jessore Zilla School (for candidates from Jessore and Khulna districts)—10th April 1935.

III. A High English School at Calcutta (for candidates from Calcutta and 24-Parganas)—12th April 1935.

2. The following teachers are eligible for the examination:—

(*a*) Teachers who have passed the Entrance or Matriculation Examination or some higher examination. The examination of these teachers will be conducted through the medium of English or vernacular according to their option.

(*b*) Teachers of vernacular subjects who have passed the Middle Scholarship Examination or the terminal examination at the end of the middle stage of instruction. The examination of these teachers will be conducted only in vernacular.

(*c*) Pandits and Maulvis employed in teaching an oriental classical language other than Pandits in Sanskrit Tols and Maulvis in Madrasahs. They may be permitted to appear at this examination, and at their option may be examined either in English or in vernacular.

3. The examination will consist of—

(*a*) A practical test in class control, the candidate being required to keep a class of at least a dozen boys attentive and fully occupied throughout a lesson.

(*b*) A practical test of teaching ability, the candidate being required to give two lessons on any two of the following subjects:—

(*a*) Science, Nature Study, Hygiene, English, Bengali, History, Geography, Arithmetic, Algebra or Geometry.

(*b*) An oral test in which the Inspector of Schools or other examiners will ask questions on the art of teaching, object lesson, class management, organisation and discipline.

4. The following books are recommended for study by the candidate:—

(*a*) For teachers of English subjects:—

(*1*) Indian Teachers' Guide, by P. Wren.

(*2*) Indian School Organisation, by P. Wren.

(*3*) Suggestions for the consideration of Teachers (Board of Education, Whitehall).

(*4*) Talks to Teachers (James).

(*5*) Art of Teaching, by D. Salmon.

(*6*) Direct Method, by Tate and Rajagopalchari.

(*b*) For teachers of vernacular subjects:—

(*1*) Bibidha Bidhan, by A. N. Adhikari.

(*2*) Teachers' Manual, by Khan Bahadur Ahsanullah.

(*3*) Padtika Likhibar Paddhati, by Jagannath Dey.

(*4*) Manobijnan, by S. C. Brahmachary.

(*5*) Sikshabijnan, by Khan Bahadur Abdur Rahman Khan, M.A., B.L.

(*c*) Teachers of oriental classical languages may study any of the above sets of books.

5. Intending candidates from high schools should submit their applications through the head masters, and teachers of middle schools or junior madrasahs through the District Inspectors of Schools, so as to reach this office not later than 18th March 1935. No case will be considered if received after that date. Every candidate will be required to produce at the time of the examination the certificate of his having passed the University or other examination. The following information should accompany the application:—

(*1*) Name in full.

(*2*) Name of father (in full).

(*3*) Name of native village and district.

(*4*) Last University Examination passed.

(*5*) Year of passing.

(*6*) Period of service as a teacher.

(*7*) Present appointment with date (mention whether he is a teacher of English subject or vernacular subjects or of oriental languages). Mention also the language through the medium of which the candidate wants to be examined.

(*8*) Two classes of subjects in which he wishes to be examined.

(*9*) Signature of applicant with full address.

6. Every candidate must bring with him at the time of examination two lesson notes on the subjects in which he wishes to give lessons. These notes should be made over to the examiner at the time of the practical examination.

7. Candidates should state whether they sat for the examination previously; if so, how often, giving dates.

J. M. SEN,

Inspector of Schools, Presidency Division.

Calcutta University.

NOTIFICATION.

Senate House, the 12th February 1935.

The following revised rules *re* the award of Sir Praphullachandra Ray Research Fellowships of the University have been adopted by the Senate:—

(*i*) The appointment to this Fellowship, which is open only to the graduates of the Calcutta University, shall be made after inviting applications by advertisement. The candidate for the Fellowship should ordinarily be either a Premchand Roychand student or holder of the Doctor's Degree and he must have already furnished positive proofs of his capacity for research by some strikingly original work.

(*ii*) He must submit along with his application a full statement of his research work previously carried out and also a list of his papers already published together with any such references to his work as may be made by other distinguished workers in his subject. He should state in his application an outline of work that he intends to do if appointed to the Fellowship.

(*iii*) The Fellow must be a whole-time worker and shall devote himself whole-heartedly to his research work. He shall not carry out any work on behalf of outsiders in the laboratory allotted to him for any consideration and must not be in receipt of any salary or emolument for serving in any other capacity.

(*iv*) The University shall from its own funds make such recurring and periodical grants or contributions as it may consider necessary, ordinarily not less than Rs. 750 and not more than Rs. 1,000, for each Fellow for each year in order to enable the Fellow to carry on his researches.

(*v*) The Fellow should be appointed for a period of two years for the first time. The Fellowship will thereafter be renewable every year up to a maximum of five years (including the first term of two years).

In applying for renewal of the scholarship the candidate must submit a detailed report of the work he has done and he intends to do in the next year, which shall be duly considered by the Committee before renewal.

(*vi*) A Committee constituted as follows will award and renew Fellowships:—

The Vice-Chancellor.

The Palit Professor of Chemistry.

The Ghosh Professor of Pure Chemistry.

The Ghosh Professor of Applied Chemistry.

The Khaira Professor of Chemistry.

The Senior Professor of Chemistry, Dacca University.

One nominee or derived nominee of the Donor (Priyadaranjan Ray, Esq., M.A:—Nominee of the Donor).

In making the award the Committee should consider the initiative and originality shown by the candidate and should definitely recommend that the candidate is of sufficient merit to justify the award.

No award should be made unless candidates fulfilling the above conditions be forthcoming and any savings on this score should be added to the corpus of the fund.

J. CHAKRAVORTI, *Registrar.*

Orders by the Vice-Chancellor and Syndicate of the Calcutta University.

NOTIFICATION No. T.392.

Senate House, the 5th February 1935.

Matriculation Examination, 1936.

In modification of previous notifications on the subject the following books are prescribed in Bengali and Hindi (Second Languages):—

Bengali.

(Open to a candidate if it is not his/her Vernacular.)

1. Matric. Bengali Selections (published by the University).

The following pieces only:—

Prose.

Sanjibchandra Chattopadhyay. Palamau.
Dineschandra Sen. Behular Basar.
Swarnakumari Debi. Dip Nirban.
Prabhatkumar Mukhopadhyay. Master Mahasay.
Saratchandra Chattopadhyay. Ramer Sumati.
Wazed Ali. Bharatbarsha.

Poetry.

Kirttibas. Sitar Ban-gaman.
Krishnachandra Majumdar. Prabasir Janma-bhumi Darsan.
Atul Prosad Sen. Bharat-Bhanu. Debata.
Kalidas Ray. Krishanir Byatha.
2. Asutosher Chhatrajiban by Atulchandra Ghatak.

Grammar.

Bengali Self-taught by Sunitikumar Chatterji (in Marlborough's "Self-taught" Series).

Hindi.

(Open to a candidate if it is not his/her Vernacular.)

1. Matric. Hindi Selections (published by the University).

The following pieces only:—

Prose.

(*a*) Mahakavi Kalidas Ka Charita.
(*b*) Dara Shikoh ki Har aur uska Badh.
(*c*) Mira Bai.
(*d*) Hindusthan (Gupta Nibandhaawali).
(*e*) Id me Muharram.
(*f*) Hamari Edward-Tilak-Yatra.

Poetry.

(*a*) Anand-Arunodaya.
(*b*) First twenty stanzas of Nazeer's "Kanhaiyaji Ka Janam."
2. Rahiman Sudha.
3. Hindi Grammar in English.

Books recommended:—

Edwin Greaves. Hindi Grammar.
Pincott. Hindi Manual.
Thimm. Hindusthani Grammar Self-taught (in Marlborough's "Self-taught" Series).

NOTIFICATION No. T.393.

Senate House, the 5th February 1935.

Matriculation Examination, 1937.

The following books are prescribed in Bengali and Hindi (Second Languages):—

Bengali.

(Open to a candidate if it is not his/her Vernacular.)

1. Matric. Bengali Selections (published by the University).

The following pieces only:—

Prose.

Sanjibchandra Chattopadhyay. Palamau.
Dineschandra Sen. Behular Basar.
Swarnakumari Debi. Dip Nirban.
Prabhatkumar Mukhopadhyay. Master Mahasay.
Saratchandra Chattopadhyay. Ramer Sumati.
Wazed Ali. Bharatbarsha.

Poetry.

Kirttibas. Sitar Ban-gaman.
Krishnachandra Majumdar. Prabasir Janmabhumi Darsan.
Atul Prosad Sen. Bharat-Bhanu. Debata.
Kalidas Ray. Krishanir Byatha.

2. Asutosher Chhatrajiban by Atulchandra Ghatak.

Grammar.

Bengali Self-taught by Sunitikumar Chatterji (in Marlborough's "Self-taught" Series).

Hindi.

(Open to a candidate if it is not his/her Vernacular.)

1. Tulsi Das by Pandit Jagannath Prasad Chaturvedi (Ganga Pustakamala, Lucknow).
2. Pancha Prasun.
3. Jayadrath Vadha by Maithili Saran Gupta.
4. Hindi Grammar in English.

Books recommended:—

Edwin Greaves. Hindi Grammar.
Pincott. Hindi Manual.
Thimm. Hindusthani Grammar Self-taught (in Marlborough's "Self-taught" Series).

NOTIFICATION No. T.394.

Senate House, the 5th February 1935.

I. A. and I. Sc. Examinations, 1937.

In modification of previous notification on the subject R. L. Stevenson's "Treasure Island" is prescribed to be read in place of "Adventures of Gerard" (Chuckerverty Chatterji & Co., Ltd.) for the Alternative Paper in English for the I. A. and I. Sc. Examinations in 1937.

J. CHAKRAVORTI, *Registrar.*

Orders by the Vice-Chancellor and Syndicate of the Calcutta University.

Senate House, the 21st February 1935.

I. The undermentioned candidates are declared to have passed the Final Examination in Law held in January 1935 :—

FIRST DIVISION.

(In order of merit.)

University Law College.

1 Sarma, Harendranath.
2 Lala, Binaykrishna.
3 Dhar, Bimalendu.
Ram Narayan Trivedi.
5 Aminul Islam.
6 Amzad Hossain Chowdhury.
7 Debray, Santoshkumar.
Guhathakurta, Rabindranath.
9 Dasgupta, Bimalchandra.
Ray, Dinendrachandra.

SECOND DIVISION.

(In order of merit.)

University Law College.

1 Ghosh, Bhupendranath.
2 Salahuddin Ahmed.

Ripon Law College.

3 Raychaudhuri, Gopalchandra.
4 Bandyopadhyay, Anilkumar.

University Law College.

Lahiri, Pranajitchandra.
6 Sarkar, Sasadhar.
7 Das, Rajendranath.
Ram Jas Singh.
9 A. Suryanarayana.

Non-collegiate student, University Law College.

10 Bandyopadhyay, Sobhamay.

University Law College.

11 Dasgupta, Susilkumar.

Ripon Law College.

Sen, Binodbihari.

Non-collegiate student.

13 Ghosh, Dhirendrakumar.

Earle Law College, Gauhati.

14 Ray, Ajitkumar.

University Law College.

15 Mukhopadhyay, Rasbihari.

Ripon Law College.

16 Chakrabarti, Kshitischandra.

University Law College.

Das, Ganeschandra.
18 Mandal, Paresnath.
19 Bandyopadhyay, Sudhirranjan.
Maitra, Susilkumar.
Nandi, Amulyakumar.

Ripon Law College.

22 Aftab Hossain.

University Law College.

Basu, Hiralal

Non-collegiate student, University Law College.

Mukhopadhyay, Binaymadhab.

Ripon Law College.

25 Md. Abdul Wahed.
Mukhopadhyay, Bholanath.

University Law College.

Ray, Amareschandra.
28 Das, Madhusudan.

Ripon Law College.

29 Manna, Amulyaratan.

University Law College.

Ray, Sudhindranath, I.
Thakur, Bishnuprasad.
32 Chakrabarti, Durgasaran.
33 Das, Kanaklal.

Ripon Law College.

Ghosh, Kumudchandra.

University Law College.

Ghosh, Rameschandra.
,, Sasankabhushan.
Majumdar, Tarakumar.
Sarkar, Prabhaschandra.
39 Jagannadha Rao Gorti.

Non-collegiate student.

Ray, Hiralal.

University Law College.

41 Datta, Asutosh.
Pandit, Gobindachandra.
43 Mitra, Ajitkumar, II

Ripon Law College.

44 Ghosh, Kalidas.

University Law College.

Quazi Sharafat Ali.
46 Bandyopadhyay, Jogabandhu.
Sen, Bhabeschandra.
,, Tarinisankar.
49 Chowdhury Fazlul Ali.
Laxmishanker V. Kapta.
Mitra, Satyendranath.

Non-collegiate student.

52 Ghosh, Gopalranjan.

University Law College.

Saha, Manomohan.
Singhi, Narendra Singh.
55 Chakrabarti, Praphullakumar.

Non-collegiate student, University Law College.

Ghosh, Atulchandra.

University Law College.

Mandal, Harisadhan.
Shitala Prasad Singh.

Non-collegiate student.

59 Majumdar, Harihar.

University Law College.

Sengupta, Arunabha.
,, Prabhatkumar.
Ray, Kamalaprasad.
63 Bandyopadhyay, Haradas.

Ripon Law College.

Chattopadhyay, Surendranath.

University Law College.

65 Basu, Sachindranath.
Chattopadhyay, Jitendranath.
Syed Maqbul Murshed.
68 Chakrabarti, Kamaniyakumar, I.

Ripon Law College.

Karmakar, Nagendranath.

University Law College.

Sarkar, Dhirendranath.

Ripon Law College.

71 Bhaumik, Arabindanath.

University Law College.

Chattopadhyay, Asitbaran.

Ripon Law College.

Medhi, Rambhadra.

University Law College.

Mitra, Kalipada.

Non-collegiate student, University Law College.

Purkayastha, Nagendranath.

University Law College.

Shaikh Shahadat Ali.

Earle Law College, Gauhati.

77 Das, Pareschandra.

University Law College.

Gupta, Birendrakumar.
Muhammad Nurul Momen.
Polisetti Mamillaiah.

Non-collegiate student, Ripon Law College.

Quazi Abul Quasem.

Ripon Law College.

82 Chaudhuri, Byomkes.

University Law College.

Mandal, Ramkanta.

Ripon Law College.

Naskar, Amulyacharan.

Earle Law College, Gauhati.

Ray, Thakurdhan.

Ripon Law College.

86 Bandyopadhyay, Nagendranath.

University Law College.

Basu, Susilkumar.
Biswas, Srischandra.
Majumdar, Sripada.
Senraychaudhuri, Sisirkumar.
91 Ghosh, Tarapada.
Maulik, Satyendranath.
Nag, Parameshprasad.
94 Basak, Satyendranath.
Chattopadhyay, Sukhendrakumar.
Das, Jyotsnamohan.
De, Dhirendralal, I.
Guhamajumdar, Sukumar.

Ripon Law College.

Pramanik, Satyendranath.

University Law College.

Sen, Ajitkumar, II.

Non-collegiate student, University Law College.

Som, Hirankumar.

Ripon Law College.

102 Basiruddin Ahmed.

University Law College.

Das, Upendrachandra.

Ripon Law College.

S. Akamuddin Ahmed.
105 Abdur Rahman Mia.

University Law College.

Abul Kasem Muhammad Shamsul Huq.
Behera, Nityananda.
Chakrabarti, Balaram.
Khaund, Saurindraram.
Nag, Kshitischandra.

Earle Law College, Gauhati.

Phukan, Bipinchandra.

University Law College.

112 Bandyopadhyay, Rammohan.
Chattopadhyay, Tarakdas.
114 Bhattacharyya, Ramkrishna.
Chakrabarti, Nirmal.

Ripon Law College.

Md. Shahabuddin Mian.

University Law College.

Muzibuddin Ahmed.

Ripon Law College.

Panja, Radhanath.

University Law College.

119 Chattopadhyay, Sudhirendra.
Ram Niwas Bhotika.
Sengupta, Kedarnath.

Ripon Law College.

122 Dattachaudhuri, Dwijendralal.

University Law College.

Ganchaudhuri, Harendrakrishna.
124 Haoladar, Amiyaranjan.

Ripon Law College.

Pal, Gopinath.

University Law College.

Pal, Kalikinkar.
127 Bandyopadhyay, Anilkumar.
Basu, Rabindranath.
Biswas, Kshetramohan.
Sinha, Ganeschandra.
Som, Dhirendranath.
132 Chaudhuri, Jatindramohan.

Non-collegiate student, University Law College.

Chaudhuri, Murarimohan.

Non-collegiate student.

Ghosh, Sudhirkumar.

University Law College.

Jatashanker Ramji Vora.
Matiar Rahman Khan.
Mitra, Sailendranath, II.

University Law College.

Ray, Mohinimohan, II.

Non-collegiate student, University Law College.

Ray, Sailendrakisor.

University Law College.

Sarkar, Sachindranath.

Non-collegiate student, University Law College.

141 Barua, Durgacharan.

University Law College.

Ghosh, Madanchandra.
143 Chaudhuri, Girigobardhan.

Ripon Law College.

Das, Mukundalal.

University Law College.

Mandal, Dulalchandra.

Ripon Law College.

Md. Meher Ali Miah.

University Law College.

Mukhopadhyay, Jnanabrata.
148 Chakrabarti, Rameschandra.

Ripon Law College.

Datta, Dharaninath.

University Law College.

Datta, Pareschandra.
Ghosh, Arabindakumar.
Mahata, Janmejay.
153 Bhattacharyya, Susilchandra.
Majumdar, Bibhutibhushan.
Mukhopadhyay, Subodhkumar.
156 Barman, Ramlal.
Chattopadhyay, Sudhansusekhar.
Ghosh, Rabindranath, I.

Ripon Law College.

Goswami, Girijabhushan.

Non-collegiate student, University Law College.

Welson, Khongmen.

University Law College.

Maulik, Upendranath.
Mitra, Tejendranath.

Ripon Law College.

Mohamed Kalander.

University Law College.

Mukhopadhyay, Pannalal.
Sadhu, Prabhakar.

B. B. DUTT,
Controller of Examinations (offg.).

Final Examination of Normal Schools in the Dacca, Chittagong and Rajshahi Divisions, 1934.

Dacca, the 12th February 1935.

The undermentioned candidates are declared to have passed the Final Examination of Normal Schools in the Dacca, Chittagong and Rajshahi Divisions held in December 1934 :—

FIRST DIVISION.

(Arranged in order of merit.)

Roll No.	Name.	Age. Y.	m.	d.
	Chittagong Normal School.			
4	Bardhan, Bepin Bihari ..	29	4	28
	Rangpur Normal School.			
18	Mian, Md. Mojakerali	27	9	0
	Chittagong Normal School.			
12	Do, Robindra Mohan	18	8	28
	Dacca Normal School.			
32	Md. Nuruzzoman	32	2	0
10	Aktaruzzaman Khan	18	10	0
16	Bepari, Jagadish Chandra ..	26	5	0

SECOND DIVISION.

(Arranged in order of roll number.)

Dacca Centre.

Dacca Normal School.

4	Abdul Mannaf Bhuia	22	1	0
5	Abdur Rahman	20	11	0
8	Aftabuddin Molla	21	1	0
15	Basu, Jitendra Nath	24	10	0
17	Biswas, Purna Chandra ..	24	1	0
20	Das Gupta, Gopal Chandra ..	18	8	0
21	Das Ray, Dharani Dhar ..	22	1	0
22	Deb, Rabindra Nath	22	10	0
24	Debnath, Probhat Chandra ..	23	8	0
26	Karmakar, Harilal	21	11	0
27	Karmakar, Phatik Chandra ..	20	0	0
28	Md. Abdul Hakim Meah ..	22	1	0
30	Md. Karimuddin	25	2	0
31	Md. Mobarak Ali	31	11	0
34	Pal, Dharani Kanta	25	0	0
35	Samaddar, Khagendra Nath ..	20	1	0
36	Sarkar, Dhirendra Chandra ..	25	11	0
37	Sarkar, Jagadish Chandra ..	28	11	0
38	Sarkar, Probodh Chandra ..	18	10	0
41	Sil, Rai Mohan	26	5	0

Chittagong Centre.

Chittagong Normal School.

1	Abdul Latif	21	2	22
3	Aftabuddin Milki	27	9	28
5	Bakhshi, Birendra Kumar ..	21	4	29
6	Chakravarti, Dakhinaranjan ..	20	11	28
7	Chakravarti, Nakul Chandra ..	23	7	29
9	Choudhury, Devendra Kumar ..	23	0	28
14	Muhammad Ishaq	22	11	28
19	Majumdar, Ramani Mohan ..	21	4	28
21	Muhuri, Nagendra Kumar ..	21	2	28
23	Nath, Birendra Kumar ..	20	0	0
24	Nath, Nagendra Kumar ..	21	9	28
26	Nath, Upendra Kumar ..	22	0	28
27	Nazir Ahmad	22	1	29

Rangpur Centre.

Rangpur Normal School.

1	Adhikari, Mahendranath ..	22	2	0
4	Chakravorti, Chandra Kumar ..	21	9	0
6	Choudhuri, Kalidas	18	9	0
10	Mandal, Dwarikanath	23	0	0
11	Mondal, Noamatulla	23	1	0
17	Md. Tomizuddin	19	6	0
23	Son Gupta, Haripada	21	6	0
24	Sarkar, Narayan Chandra ..	22	11	25
26	Talukdar, Mizanur Rahman ..	21	2	0

Roll No.	Name.	Age. Y.	m.	d.

THIRD DIVISION.

(Arranged in order of roll number.)

Dacca Centre.

Dacca Normal School.

1	Abdul Hamid	18	9	0
2	Abdul Jabbar	22	10	0
3	Abdul Latif (Md.)	22	0	0
6	Abdur Razzak	22	3	0
7	Abdus Sobhan Bhuia (Md.) ..	20	5	0
9	Aktar Ali (Md.)	33	9	0
11	Ali Hossain	22	1	0
12	Alimuddin Ahmed	24	0	0
18	Chakraborti, Ratikanta ..	19	11	0
19	Chatterjee, Hiralal	22	11	0
23	Debnath, Dinesh Chandra ..	19	10	0
25	De Ray, Rash Mohan	19	4	0
33	Majibar Rahman	20	11	0
39	Serajul Hoque (Md.)	28	0	0
42	Sil Das, Samaresh Chandra ..	21	11	0
43	Syed Mobarak Ali	20	1	0
44	Tarif Bhuia (Md.)	20	9	0

Private candidates.

Dacca Normal School.

1	Abdul Hoque	19	9	0
2	Abdul Latif Sikdar	22	10	0
3	Alauddin Khan	22	1	0
4	Asmat Ali Molla	19	8	0
5	Das, Nalini Kanta	22	3	0
6	Kazi Joynal Abedin	18	11	0
7	Md. Abdul Khaloque	21	7	0
8	Md. Abdur Rahim Meah ..	20	4	0
9	Md. Ayyub Ali	23	2	0
12	Mazumdar, Maharaj	19	1	0

Chittagong Centre.

Chittagong Normal School.

2	Abdus Salam	21	11	28
10	Das, Amulya Ratan	20	0	0
11	Das, Lalit Mohan	24	5	26
13	Kamaluddin Ahmad	22	10	29
15	Muhammad Inaitullah	19	4	28
16	Muhammad Khurshed Alam ..	20	6	28
17	Muhammad Nurul Haq ..	23	1	26
18	Muhammad Sultan Mian ..	25	1	0
22	Nawab Ali	21	0	28
25	Nath, Radhagobinda	18	9	28
29	Rakshit, Rash Bihari	18	9	28
30	Shaikh Md. Harunur Rashid ..	18	8	28
31	Talukdar, Satish Chandra ..	22	9	28

Private candidates.

Chittagong Normal School.

4	Md. Ismail	20	0	25
6	Muhammad Shamsul Haq ..	19	1	11
7	Nurul Haq Mian	19	11	0
8	Nagendralal Dhar	19	10	0
11	Velayit Husain	20	1	0
12	Sekundar Ali Miyan	19	7	1

Rangpur Centre.

Rangpur Normal School.

3	Ahmed, Kafiluddin	26	11	0
5	Chakravarty, Pravash Chandra ..	21	2	3
8	Karmakar, Sures Chandra ..	20	10	0
9	Mahapatra, Narendra Chandra ..	22	9	0
13	Md. Afzal Hossain	23	10	0
14	Md. Ebadar Rahman	20	0	0
19	Mian, Mohsen Ali	20	11	0
20	Pramanik, Hosainuddin ..	22	1	0
21	Roy, Dines Chandra	21	0	0
22	Roy, Nibaran Chandra ..	22	10	15
25	Sarkar, Sarat Chandra	21	11	0

Private candidates.

Rangpur Normal School.

1	Akonda, Nur Mohammad	25	11	0
2	Chaudhury, Mostafizur Rahman ..	21	5	0
4	Md. Mosharaf Husain Chaudhury ..	21	4	23
6	Sarkar, Hem Chandra	20	0	0
8	Rahamatali	22	11	28

M. MITRA,

Principal, Teachers' Training College, Dacca.

Rajshahi Division.

Jalpaiguri, the 1st February 1935.

Results of Guru and Muallim Training Examinations of 1934.

The following Gurus are declared to have passed the Guru and Muallim Training Examinations of 1934 :—

(The letter " E " against a candidate indicates that he passed also in English.)

(In order of merit.)

Naogaon Guru Training School.

1 Ahmed Ali.

Thakurgaon Guru Training School.

2 Kali Prosad Barma (E).

Bogra Guru Training School.

3 Ismatulla Fakir (E).

Pabna Guru Training School.

Md. Abul Hossain.

Nator Muallim Training School.

4 Md. Mamtajali Shaikh.

Naogaon Guru Training School.

5 Alaman Pramanik (E).

Pabna Guru Training School.

Abu Mohammad Golam Rabbani (E).

Thakurgaon Guru Training School.

6 Md. Jamiruddin (E).

Jalpaiguri Guru Training School.

7 Abdul Karim (E).

Bogra Guru Training School.

Hemanta Kumar Nath (E).

[According to serial number (school by school).]

Rajshahi District.

Boalia Guru Training School.

1 Durga Charan Pal.
2 Akkelali Sarkar.
3 Md. Jonab Ali.
4 Md. Abdul Jabbar.
5 A. B. Md. Osman Ghani (E).
6 Ketabuddin Sarkar.
7 Md. Mobarak Hosain (E).
8 Manindra Bhusan Sarkar (E).
9 Gokul Chand Saha (E).
10 Bayenuddin Pramanik (E).
11 Tamiruddin Pramanik.
12 Khoshdel Ali Sarkar (E).
13 Haibatulla Pramanik.
14 Nikunja Behari Sarkar.
15 Jafaruddin Shah (E).
16 Satya Charan Sarkar (E).
17 Mahammadulla.
18 Aswini Kumar Sanyal (E).
19 Md. Arshadali Molla (E).
20 Siddique Ahmed (E).
21 Abdul Latif Sarkar (E).
22 Ganga Charan Pal (E).
23 Kalimudin Ahmed (E).
24 Brojendra Nath Chakravarty (E).
25 Md. Taimurali (E).
26 Md. Emaduddin (E).
27 Md. Safatulla Khan (E).
28 Md. Shahabuddin Sarkar (E).
29 Mahammadali Sarkar (E).
30 Abdul Goffar Mian (E).
31 Adeshali Mandal (E).
32 Bazlul Haque (E).
33 Jagat Chandra Chakravarty.
34 Abdur Rahman (E).
35 Md. Ghiasuddin (E).

Private.

1 Broja Gopal Biswas (E).
2 Abdur Rahman Pramanik.
3 Sourindra Mohan Bhattacharji (E).

Naogaon Guru Training School.

1 Dhirendra Mohan Joardar.
2 Ramendra Chandra Shaha.
3 Aminur Rahman Khondker (E).
4 Sheikh Khoda Baksh (E).
5 Jaynal Abedin .
6 Tamizuddin Mandal.
7 Khabiruddin Shah.
8 Kudratali Mandal.
9 Jamiruddin Mridha.
10 Basiruddin Ahmed (E).
11 Hossainali Sarkar.
12 Dewan Sabdel Ali (E).
13 Jagannath Pramanik.
14 Prasanna Kumar Mandal.
15 Kasiruddin Pramanik.
16 Mani Mohan Mukherjee.
17 Md. Rabinulla Miah (E).
18 Kazemuddin Mandal.
19 Afazuddin Ahmed.
20 Maqbul Ahmed.

Nator Muallim Training School.

1 A. B. Goljar Hossain Mian (E).
2 Neazuddin Ahmed.
3 Mahammad Hossain (E).
4 Md. Yakubali Dewan.
5 Md. Nural Huda.
6 Reazuddin Ahmed.
7 Md. Taheruddin (E).
8 Md. Shish.
9 Hafizuddin Ahmed.
10 Md. Azizur Rahman.
11 Md. Maniruddin.
12 Md. Meherali.
13 Md. Tofailuddin.
14 Md. Abul Kasem.
15 Md. Mafizar Rahman.
16 Md. Firojuddin (E).
17 Md. Nasiruddin.
18 Md. Nahiruddin.
19 Md. Abdur Ruzzak.
20 Md. Abbas Ali.
21 Md. Naimuddin Mian.
22 Md. Unmatali Dewan.
23 Md. Kenayet Hossain.
24 Md. Manikuddin Mian (E).
25 Md. Asadozzaman.
26 Md. Abdul Wahed.
27 Md. Hossainuddin.
28 Md. Abdar Rahman.
29 Md. Manikulla Mandal.

Private.

30 Mahiuddin Ahmed.

Dinajpur District.

Dinajpur Guru Training School.

1 Kharga Narayan Roy.
2 Md. Idris Ali.
3 Banka Behari Roy.
4 Md. Solaiman Mia (E).
5 Md. Asiruddin Ahmed.
6 Ayenuddin Shah.
7 Asiruddin Ahmed.
8 Nalini Kumar Sarkar (E).
9 Chayenuddin Ahmed (E).
10 Dewan Abdul Jabbar (E).
11 Khejmat Ali.

12 Sheikh Sirajuddin Sarkar.
13 Tamizuddin Ahmed.
14 Azizar Rahman.
15 Sheikh Abed Hossain (E).
16 Sharafuddin Ahmed (E).
17 Md. Ramjanuddin Mia (E).
18 Annada Prasad Das.
19 Tufani Deshi.
20 Md. Ali Mandal.
21 Sheikh Azizar Rahman.
22 Safiuddin Ahmed (E).
23 Badiazzaman Ahmed.
24 Roazuddin Ahmed.
25 Sarfaraj Ali Ahmed.
26 Jatindra Mohan Roy.
27 Satya Narayan Das.
28 Md. Abdul Jalil Sheikh (E).
29 Surendra Nath Barma.
30 Khagendra Nath Barma.
31 Shaikh Hazer Muhammad.
32 Bejoy Basanta Barma.
33 Pramatha Nath Roy.
34 Digendra Nath Das (E).

Private.

1 Arifuddin Ahmed Mia.
2 Sadananda Barma.
3 Md. Abdul Karim.
4 Abdur Rahman.

Thakurgaon Guru Training School.

1 Tofazzal Hussain (E).
2 Amiruddin Ahmed (E).
3 Khabsur Rahman Khan.
4 Naziruddin Ahmed (E).
5 Rahimuddin Ahmed (E).
6 Kalimuddin Ahmed.
7 Md. Abdul Jabbar (E).
8 Sefaruddin Ahmed.
9 Nizamuddin Ahmed (E).
10 Abdul Latif Sarkar.
11 Pabaruddin Ahmed.
12 Kharga Mohan Barma.
13 Madhab Chandra Roy.
14 Mahim Chandra Giri (E).
15 Anil Baran Singh Roy.
16 Sovaram Deb Barman (E).
17 Md. Anwaral Hossain.
18 Syed Kasemuddin Shah.
19 Fazaruddin Ahmed (E).
20 Md. Nissar Ali (E).
21 Taslimuddin Ahmed.
22 Mahtabuddin Ahmed
23 Bhuban Mohan Roy.
24 Annada Prasad Pal (E).
25 Birendra Nath Talukdar.
26 Md. Eshaque Mia.
27 Keramatuddin Ahmed.
28 Tarani Mohan Deb Barman.
29 Md. Abed Ali.
30 Azimuddin Ahmed.
31 Srimatuddin Ahmed.
32 Mahtabuddin Sarkar.
33 Afiruddin Ahmed (E).

Private.

1 Mofizuddin Ahmed.
2 Abdul Bari (E).
3 Md. Abdul Ghani.

Jalpaiguri District.

Jalpaiguri Guru Training School.

1 Mahammad Tarikulla (E).
2 Md. Wasimal Haque (E).
3 Samiruddin Ahmed.
4 Tamizuddin Ahmed (E).
5 Mahammad Sharifuddin (E).
6 Taslimuddin Ahmed.
7 Pabitra Kumar Barma (E).
8 Shisuram Barma.
9 Md. Azizar Rahman (E).
10 Moizuddin Ahmed (E).
11 Jadav Chandra Roy (E).
12 Baikuntha Nath Brajabashi.
13 Doyal Chandra Tantra.
14 Nagendra Nath Roy Pramanik.
15 Priyadhar Roy Dakua.
16 Gajendra Nath Roy.
17 Mahendra Nath Sen.
18 Nizamuddin Ahmed Prodhan (E).
19 Jatindra Mohan Das (E).
20 Beharinath Roy (E).
21 Jogendra Chandra Roy.
22 Khagendra Nath Roy (E).
23 Nizamuddin Ahmed (E).
24 Rasik Mohan Dutt (E).
25 Md. Nazmal Hoque.
26 Gour Chandra Mandal (E).
27 Md. Abdul Ghani.

Private.

1 Kshetra Mohan Deb Nath (E).

Rangpur District.

Gaibandha Guru Training School.

1 Mukhtaruddin Ahmed (E).
2 Kafanulla Sarkar.
3 Paniruddin Shaikh.
4 Maniruddin Ahmed.
5 Md. Abdul Majid (E).
6 Rakhal Ch. Das Baishnab (E).
7 Md. Kamal Hossain Choudhury (E).
8 Shah Sultan Ali (E).

Private.

1 Nawabuddin Sarkar.
2 Md. Mazharali.
3 Md. Abdur Razzak.
4 Muhammad Ali.

Kurigram Guru Training School.

1 Talebuddin Sarkar.
2 Md. Abul Hossain Mia (E).
3 Khandker Abdul Hakim (E).
4 Jatindra Nath Sharma.
5 Md. Hasnatulla Mia.
6 Md. Abdul Majid (E).
7 Md. Abdul Kuddus Mia.
8 Md. Badiazzaman.
9 Azizar Rahman Mia (E).
10 Bhola Nath Roy.
11 Afanali Sawed (E).
12 Kali Chand Barman (E).
13 Md. Mofizuddin Zarmaty.
14 Md. Salimulla.
15 Suryya Prasad Sarkar.
16 Serajuddin Sarkar (E).
17 Upendra Chandra Das.
18 Durga Charan Chakravarty.
19 Monsur Ahmed.
20 Md. Emdadulla (E).
21 Mafizuddin Sarkar (E).
22 Abdus Samad (E).
23 Amiruddin Ahmed.
24 Md. Sayeduddin (E).
25 Md. Akbarali Mia (E).
26 Md. Sahebuddin Sarkar.

Private.

1 Sudhir Kumar Datta.

Nilphamari Guru Training School.

1 Aftabuddin Akanda.
2 Siddique Hossain.
3 Khalilur Rahman.
4 Akhtarur Rahman.
5 Md. Nuruddin (E).
6 Md. Alefuddin (E).
7 Basiruddin Fakir.
8 Asgor Hossain.
9 Md. Assafuddin Sarkar.
10 Md. Moslehuddin (E).
11 Md. Solaiman Mia (E).
12 Azmalulla (E).
13 Md. Abdul Hamid Prodhan.
14 Md. Azizar Rahman.
15 Md. Mafizuddin (E).
16 Talebuddin Ahmed (E).
17 Kasiruddin Ahmed.
18 Sultanuddin Ahmed.
19 Md. Sanaruddin.
20 Asimulla.
21 Abdul Hakim.
22 Ketabuddin Ahmed

23 Nasiruddin Ahmed.
24 Abdur Rahman, II (E).
25 Md. Ali Azam.
26 Naimuddin Ahmed (E).
27 Md. Tajuddin.
28 Badiuddin Ahmed.
29 Anteswar Barman.
30 Nirasha Barman.
31 Bhabani Charan Roy.
32 Benod Behari Adhikary (E).
33 Jasimuddin Ahmed.

Private.

1 Pacha Mahammad.

Bogra District.

Bogra Guru Training School.

1 Md. Nasiruddin.
2 Md. Masharaf Hossain Bhuiya (E).
3 Md. Arifuddin (E).
4 Md. Mukarram Hossain (E).
5 Khedmatulla Pramanik.
6 Manindra Nath Bagchi.
7 Nabiruddin Pramanik (E).
8 Amiruddin Ahmed.
9 Saiduddin Mridha (E).
10 Jitendra Nath Dhar (E).
11 Syed Hossain Sarkar (E).
12 Jabedali Dewan (E).
13 Khoda Baksha Akanda.
14 Md. Karmatulla.
15 Md. Miruddin Sarkar (E).
16 Md. Mohiuddin Sarkar (E).
17 Md. Moinuddin.
18 Reajuddin Ahmed.
19 Md. Raisuddin Mia.

Pabna District.

Pabna Guru Training School.

1 Panchanan Roy.
2 Md. Ayezuddin.
3 Haripada Sarkar.
4 Harish Chandra Dey (E).
5 Sri Gobinda Biswas.
6 Santiram Das (E).
7 Md. Abdul Karim Mia (E).
8 Narendra Nath Das (E).
9 Md. Abdul Majid.
10 Md. Kasiruddin (E).
11 Md. Reazul Hoque.
12 Md. Tamizuddin Talukdar.
13 Md. Rustamali Khan.
14 A. N. Md. Afzal-ul Haque.
15 A. K. Md. Arshad Ali.
16 Md. Nazmal Hossain (E).
17 Gopal Chandra Sarkar (E).
18 Md. Mansuruddin Almazi (E).
19 Md. Saqiruddin Sarkar.
20 Muhammad Ali Mia, I (E).
21 Wasimuddin Sarkar.
22 Md. Mansur Rahman Mia (E).
23 Bejoy Krishna Chakravarty.
24 Ali Ashraf Mia.
25 Md. Shojab Ali.
26 Mafizuddin Ahmed.
27 Mahammad Ali Mia, II.
28 Profulla Kumar Roy.
29 Md. Khorshed Ali.
30 Krishna Lal Ghose (E).
31 Md. Naimuddin.

Private.

1 Borhanuddin Ahmed (E).
2 Md. Jamser Ali.

Malda District.

Malda Guru Training School.

1 Ajendrasashi Acharyya (E).
2 Ashutosh Pramanik.
3 Md. Abdul Khaleq.
4 Motin Chandra Choudhury.
5 Muhammad Hossain (E).
6 Md. Abdus Sattar.
7 Md. Abdul Gofur.
8 Tinkari Mondal.
9 Gopi Mohan Karmakar.
10 Md. Shamsuzzoha Miah (E).
11 Shaikh Habibuddin.
12 Tinkari Chandra Sarkar.
13 Sukhendu Bikash Ganguli (E).
14 Lakshmi Kanta Karmakar (E).
15 Muhammad Ali.
16 Sarat Kumar Mandal.
17 Indra Bhusan Das (E).
18 Ramesh Chandra Shaha.
19 Balaram Mandal.
20 Md. Majed Ali Biswas.
21 Mahoswar Mandal.
22 Md. Kefayetulla.
23 Md. Nazor Ali (E).
24 Md. Waziuddin (E).
25 Sundar Lal Mandal.
26 Md. Muzaffar Hossain.
27 Md. Dabiruddin.
28 Mir Mohoshin Ali.
29 Md. Quammarzzaman (E).
30 Md. Emajuddin.
31 Nagendra Nath Jha.
32 Bhagaban Ch. Mandal.
33 Jharulal Das (E).
34 Haridas Ganguli.

K. AHMED,
Inspector of Schools, Rajshahi Division.

Education Department, Bengal.

NOTIFICATION.

Dacca, the 6th February 1935.

In the list of successful candidates in the last Primary (Maktab) Final Examination from the Baraipara Board Primary School of the Madaripur Centre, published under this office notification, dated the 22nd December 1934, at page 77 in Part IB of the *Calcutta Gazette* of the 10th January 1935—

For

Roll No. 85 .. *Gopal Chandra Bhowmik .. I

Please *read*

Roll No. 85 .. *Gopal Chandra Chakraverty .. I

A. H. KHAN CHAUDHURY,
Inspector of Schools, Dacca Division.

Board of Intermediate and Secondary Education, Dacca.

NOTIFICATION.

Ramna, the 5th February 1935.

Jack Muhammadan Settlement Scholarship, 1934.

No. 1082.—Subject to the usual conditions of good conduct and satisfactory progress, the Junior Jack Muhammadan Settlement Scholarship attached to the Dacca Islamic Intermediate College of the value of Rs. 90 per annum, is awarded to the following student:—

Asmatullah Patwari, Dacca Islamic Intermediate College.

2. The scholarship is tenable at the Dacca Islamic Intermediate College for two years with effect from the 1st June 1934.

3. The scholar must reside in a hostel attached to the Dacca Islamic Intermediate College.

A. KHALIQ, *Secretary.*

Registered No. C207

The Calcutta Gazette

THURSDAY, FEBRUARY 21, 1935.

PART II

Advertisements.

Notices.

Advertisements, Notices, etc., intended for insertion in this part of the Gazette cannot be received after noon on Saturday. All manuscripts and postal remittances must be addressed to Superintendent, Government Printing, Bengal Government Press, Alipore. For the convenience, however, of parties or firms located in Calcutta cash payments of Advertisement charges may be made at Publication Sales Office, Room No. 2, Ground Floor, Writers' Buildings, Calcutta.

Land Sale Notices.

Notification A.

NOTICE is hereby given, under section 6, Act XI of 1859, read with Act VII (B. C.) of 1868, that the undermentioned noabad taluks and izaras within the Patiya khas mahal, in the district of Chittagong, will be put up for sale at the office of the Collector of that district on the 28th March 1935, at 12 noon, for arrears of rent (and other demands which by law are realizable as arrears of rent) :—

Tauzi No.	Name of taluk with its situation.	Sadar jama.			Names of talukdars.	Balance.			
		Rent.	Cess.			Rent.	Cess.		Total.
		Rs. a. p.	Rs. a. p.			Rs. a. p.	Rs. a. p.		Rs. a. p.
6749	Keramat Ali, mauza East Dhopasari, police-station Patiya.	1,510 8 0	185 5 6		M. Abdul Aziz Chowdhury, son of Haji Abdul Samad Chowdhury, of Maguama, police-station Chakaria.	630 0 0	75 14 6		705 14 6
10152	Rahaman Ali, mauza Char Lakshya, police-station Patiya.	609 0 0	68 1 6		S. M. Ayesha Khanam, daughter of Rahaman Ali Meah, of Patharghata, police-station Town.	332 0 0	24 14 6		356 14 6
10166	Mukima Bibi, mauza Khoaznagar, police-station Patiya.	539 4 0	45 12 0		Ditto	259 4 0	25 14 0		285 2 0
14141	Osman Sadagar, mauza Ichanagar, police-station Patiya.	1,365 0 0	145 14 6		Hedayat Ali, son of Md. Pactan Malum of Agarabad, police-station Double Mooring.	771 12 0	88 11 3		960 7 3
14398	Raj Chandra Sen, mauza Ichanagar, police-station Patiya.	539 0 0	62 15 9		Ditto	344 0 0	38 7 3		382 7 3
32806	Rahaman Ali of Dangachar, police-station Patiya.	738 0 0	80 7 9		S. M. Ayesha Khanam, wife of Md. Nurer Rahaman, of Patharghata, police-station Town.	415 0 0	38 3 3		453 3 3
34793	Challaproo of East Dhopasari, police-station Patiya.	712 8 0	98 15 3		M. Abdul Aziz Chowdhury, son of Haji Abdul Samad Chowdhury, of Maganama, police-station Chakaria.	290 0 0	41 15 6		337 15 6
35000	Ramdin Hazari of Burumchara, police-station Anwara.	2,874 12 0	325 9 3		Haji Minnat Ali Dovashi, son of Md. Hari Chowdhury, of Paschimchal.	718 8 0	81 4 0		799 12 0
35073	Rahaman Ali Meah of Dangachara, police-station Patiya.	553 0 0	62 7 6		S. M. Amaturnur Begum, wife of Apidal Alam Meah, of Patharghata, police-station Town.	280 12 0	29 7 6		310 3 6

These noabad taluks and izaras are being advertised for sale for instalments of rent and cesses due on or before the 30th November 1934. Latest date of payment was the 12th January 1935.

Chittagong, the 13th February 1935.

K. G. MURSHED, Addl. Collector.

Notification A.

NOTICE is hereby given, under section 6, Act XI of 1859, read with Act VII of 1868, that the undermentioned noabad taluks and ijaras within the Satkania khas mahal, in the district of Chittagong, will be put up for sale at the office of the Collector of that district on the 29th March 1935, at 12 noon, for the arrears of rent (and other demands which by law are realisable as arrears of rent) :—

Serial No.	No. of taluk.	Name of taluk with its situation.	Names of proprietors.	Sadar jama.		Arrears.		Total.
				Rent.	Cess.	Rent.	Cess.	
				Rs. a. p.	Rs. a. p.	Rs. a. p.	Rs. a. p.	Rs. a. p.
1	32841	Mauza Pulchhari, thana Banskhali, mahal Noabad, taluk Mobarakali.	Maqbulali Chowdhury, son of Md. Sarif Miaji, of Chhorachanua, Ijjatali, son of Jafarali Chowdhury, of Pulchhari.	4,196 8 0	655 0 0	3,715 4 0	662 5 0	4,377 9 0
2	35059	Mauza Napora, thana Banskhali, mahal Noabad, taluk Rajkumar Roy.	Ijjatali Chowdhury, son of Jafarali Chowdhury, of Pulchhari.	1,395 12 0	194 14 6	1,352 4 6	223 15 9	1,576 4 3
3	32903	Mauza Sekherkhil, thana Banskhali, mahal Noabad, taluk Tazannissa.	Tajumbalali Chowdhury, son of Ashrafali Chowdhury, of Talladwip, police-station Anwara.	2,961 8 0	456 11 9	3,517 0 0	413 13 0	3,930 13 0
4	33043	Mauza Sekherkhil, thana Banskhali, mahal Noabad, taluk Abdul Majid.	Ditto	598 8 0	73 14 3	781 12 0	77 14 6	859 10 6
5	33156	Mauza Alakdia, thana Banskhali, mahal Noabad, taluk Gouri Sankar.	Bhagaban Chandra, son of Benimadhab Sen, of Saroatali, police-station Boalkhali.	733 4 0	132 15 3	711 11 6	172 12 9	884 8 3
6	33157	Mauza Gandamara, thana Banskhali, mahal Noabad, taluk Kamarali.	Jogendra Krishna, son of Sananda Chandra Roy; Nilkrishna Roy, son of Rai Nityananda Roy Bahadur, of Paradbazar, police-station Kotwali.	643 8 0	61 0 0	385 10 0	38 4 6	423 14 6
7	34542	Mauza Charati, thana Satkania, mahal Noabad, taluk Durga Priya Sen.	Satish Chandra, Jogesh Chandra and Tarak Chandra, sons of late Uma Charan Sen, of Barama, police-station Patiya.	922 8 0	67 2 9	919 8 0	70 11 0	990 3 0
8	5069	Mauza Paharchanda, thana Satkania, mahal Noabad, taluk Nilmani.	Md. Wazedali Chowdhury, son of Mahabbat Ali Chowdhury, of Jaldi.	826 8 0	99 11 9	981 3 9	137 1 9	1,118 5 6
9	5070	Mauza Paharchanda, thana Satkania, mahal Noabad, taluk Omraosingh.	Yakubali Chowdhury, son of Abdul Ali Chowdhury, of Lohagara.	514 12 0	62 6 3	473 1 0	63 7 0	536 8 0
10	5080	Mauza Dakhinputibila, thana Satkania, mahal Noabad, taluk Nilmani.	Gour Sundar, son of Basanta Ram Das, of Kalauzan.	1,010 8 0	103 9 3	760 8 3	47 7 6	807 15 9
11	5647	Mauza Charamba, thana Satkania, mahal Noabad, taluk Kalkinkar.	Nilmani, son of Debidas Chowdhury; Pranhari, son of Haradas Chowdhury, of Charamba.	2,673 0 0	367 0 0	3,091 0 0	383 15 0	3,474 15 0
12	34964	Mauza Purangar, thana Satkania, mahal Noabad, taluk Rai Sarat Ch. Das Bahadur.	Suresh Chandra, Hem Chandra, sons of Ram Kumar Chowdhury, of Dhomsha.	616 0 0	135 4 9	412 13 0	131 8 0	547 5 0

N. B.—These noabad taluks are being advertised for sale for instalments of rents and cesses due on or before the 30th November 1934, of which the latest date of payment was on the 12th January 1935.

K. G. MURSHED, Addl. Collector.

Chittagong, the 13th February 1935.

Notification A.

(Notice for sale for arrears of rent.)

NOTICE is hereby given, under section 6, Act XI of 1859, read with Act VII (B. C.) of 1868, that the undermentioned noabad taluks and ijaras within the Cox's Bazar khas mahal, in the district of Chittagong, will be put up for sale at the office of the Collector of that district on the 30th March 1935, at 12 noon, for arrears of rent and cesses (and other demands which by law are realizable as arrears of rent) :—

Serial No.	Tauzi No.	Name of mahal and pargana.	Sadar jama of the whole estate.		Whether the whole estate is to be sold.	Name of proprietors of property to be sold.	If the whole estate is to be sold, the arrears due from it.		
			Rent.	Cess.			Rent.	Cess.	Total.
			Rs. a. p.	Rs. a. p.			Rs. a. p.	Rs. a. p.	Rs. a. p.
1	5	Police-station teknaf, mauza Lengurbil, taluk Thau Choudhury.	958 12 0	119 5 0	Whole ..	Keojapru, son of Challapo Choudhury, of Teknaf and others.	1,198 8 0	137 2 3	1,335 10 3
2	8	Police-station Teknaf, mauza Madhyanilla, taluk Charipoo.	686 12 0	86 11 3	Do. ..	Nagendra Lal De, son of Sasti Charan De, of Battali, police-station Anuara.	396 4 0	52 12 6	449 0 6
3	17	Police-station Ukhia, mauza Haladiapalong taluk Harijugal.	3,135 0 0	476 1 3	Do. ..	Rashik Ch. Choudhury, son of Bechuram Choudhury, of Sakpura.	1,899 0 0	287 14 6	2,186 14 6
4	81	Police-station Ukhia, mauza Rumkhapalong, taluk Abdul Hakim.	587 0 0	65 15 0	Do. ..	Maymunor Rahman, son of Md. Hossein Sikder, of Pagalirbill, police-station Ukhia, and others.	97 12 0	9 7 0	107 3 0
5	92	Police-station Cox's Bazar, mauza Totakkhali, taluk Jafar Ali.	1,327 8 0	188 7 0	Do. ..	Muhammad Ilias, son of Khalilur Rahman, of Uttar Masuakhali.	1,327 4 0	175 2 6	1,502 6 6
6	94	Police-station Cox's Bazar, mauza Patelli Masukhali, taluk Ear Muhammad.	1,065 0 0	114 10 0	Do. ..	Purna Chandra, son of Brindaban Ch. Pal, of Dhurung, police-station Fatickchari.	739 4 0	75 9 3	814 13 3
7	99	Police-station Cox's Bazar, mauza Patelli Masukhali, taluk Hari Sikder.	1,137 0 0	103 4 9	Do. ..	Aziz Ulla, son of Latif Ali Sawdagar, of Madarbari, police-station Double Moorings.	1,015 0 0	98 10 0	1,113 10 0
8	101	Police-station Cox's Bazar, mauza Patelli Masukhali, taluk Samad Ali.	1,140 10 9	130 4 3	Do. ..	Nur Muhammad, son of Habban Ali Choudhury, of Patelimasuakhali.	1,140 2 9	120 14 9	1,261 1 6
9	107	Police-station Cox's Bazar, mauza Patelli Masukhali, taluk Ajgar Ali.	562 12 0	114 3 3	Do. ..	Jagabundhu Chakrabarty, son of Biswambar Adhikary, of Cox's Bazar.	262 2 0	57 11 0	319 13 0
10	121	Police-station Cox's Bazar, mauza Kharulia, taluk Khairulla.	750 0 0	63 7 6	Do. .	Akhileswari, wife of Kamala Kanta Sen, of Cox's Bazar.	683 2 0	52 13 9	735 15 9
11	122	Police-station Cox's Bazar, mauza Kharulia, taluk Baksa Ali.	800 0 0	69 14 9	Do. ..	Rahimannisa, wife of Muhabbat Ali Choudhury, of Jaldi, police-station Bashkhali.	897 0 0	72 14 3	969 14 3
12	138	Police-station Ramoo, mauza Chakmarkul, taluk Kalukamar Ali.	1,696 12 0	154 12 0	Do. .	Jagat Ch. Bahaddar, son of Ramdar Bahaddar, of Rata, police-station Banskhali.	1,809 4 0	153 10 9	1,962 14 9
13	153	Police-station Ramoo, mauza Nunasari, taluk Baidyanath.	655 0 0	54 13 3	Do. ..	Golamkibria, son of Maulvi Nazir Ali, of Uttarmitasari.	560 4 0	53 14 6	614 2 6
14	165	Police-station Ramoo, mauza Uttarmitasari, taluk Rustum Ali.	594 8 0	45 14 9	Do. ..	Badaradduza Choudhury, son of Abdul Fatta Chowdhury, of Uttarmitasari.	171 3 0	18 15 0	190 2 0
15	193	Police-station Ramoo, mauza Haltupi, taluk Manorama.	650 0 0	71 1 9	Do. .	Golambari, son of Nazir Alf Choudhury, of Uttarmitasari, and others.	325 0 0	33 14 9	308 14 0
16	207	Police-station Ramoo, mauza Ukhiarghona, taluk Indranarayan.	1,022 0 0	200 13 9	Do. ..	Purna Chandra Pal, son of Brindabon Pal, of Dhurung, police-station Phatickari.	681 0 0	127 9 0	808 9 0
17	213	Police-station Chakaria, mauza Ghunia, taluk Kalusambu.	516 12 0	35 0 0	Do. ..	Maulvi Sultan Ahmad, son of Maulvi Badiuzzama, of Kakhara, and others.	614 12 0	38 10 0	653 6 0
18	237	Police-station Chakaria, mauza Khutakhali, taluk Moborek Ali.	1,110 12 0	169 9 9	Do. ..	Jabedakhatun, wife of Haji Izzat Ali Choudhury, of Pulsari, and others, police-station Banskhali.	870 0 0	150 8 6	1,020 8 6
19	243	Police-station Cox's Bazar, mauza Choufuldandi, taluk Aman Ali.	4,711 0 0	520 13 0	Do. ..	Muzaffar Ahmad Choudhury, son of Asharaf Ali Choudhury, of Choufuldandi.	3,864 12 0	531 8 0	4,396 4 0

Serial No.	Tauzi No.	Name of mahal and pargana.	Sadar jama of the whole estate.		Whether the whole estate is to be sold.	Name of proprietors of property to be sold.	If the whole estate is to be sold, the arrears due from it.		
			Rent.	Cess.			Rent.	Cess.	Total.
			Rs. a. p.	Rs. a. p.			Rs. a. p.	Rs. a. p.	Rs. a. p.
20	249	Police-station Cox's Bazar, mauza Bharuakhali, taluk Muhammad Raja.	1,518 0 0	213 7 0	Whole ..	Muzaffar Ahmed Choudhury, son of Ashraf Ali Choudhury, of Choufuldandi.	1,043 12 0	169 0 9	1,212 12 9
21	250	Ditto ..	1,497 13 0	225 0 6	Do. .	Ditto ..	911 13 0	183 2 9	1,094 15 9
22	264	Police-station Ramoo, mauza Joarianala, taluk Golam Ali.	744 0 0	83 5 3	Do. ..	Sagar Ali Bahaddar, son of Asmat Ali, of Baraduna, and others, police-station Satkania	665 0 0	72 11 3	737 11 3
23	273	Police-station Chakaria, mauza Palakata, taluk Ali Muhammad.	597 8 0	59 15 3	Do. ..	Makbul Ali Choudhury, son of Md. Sarif Moaji, of Chota Sanua, police-station Banskhali.	208 8 0	19 15 6	228 7 6
24	278	Police-station Chakaria, mauza Modhakasapia, taluk Ajimaddin.	895 12 0	212 3 3	Do. ..	Izzat Ali Choudhury, son of Jafar Ali, of Pulsari, police-station Banskhali.	897 4 0	198 0 6	1,095 4 6
25	545	Police-station Teknaf, mauza Teknaf, taluk Fate Choudhury.	2,065 7 0	310 4 0	Do. ..	Keojapru Choudhury, son of Challapru Choudhury, of Teknaf.	2,581 15 0	356 9 6	2,938 8 6
26	560	Police-station Teknaf, mauza Dakhinnilla, taluk Ishan Chandra.	3,221 0 0	312 8 3	Do. ..	Chanthuai, son of Keothuai Choudhury, of Dakhinnilla, and others.	4,277 5 0	350 6 3	4,627 11 3
27	608	Police-station Teknaf, mauza Madhayanilla, taluk Hlameri.	587 4 0	88 3 3	Do. ..	Changthang, son of Keothuai, of Dakhinnilla.	792 12 0	101 6 6	894 2 6
28	956	Police-station Moheskhali, mauzas Amabasyakhali and Ghatibhanga, taluk Prasanna Kumar Roy.	6,201 12 0	1,775 15 9	Do. ..	Roy Khirod Ch. Rai Bahadur, son of Prasanna Kumer Roy, of Purbakanyara, police-station Anwara.	5,624 4 0	1,524 11 6	7,148 15 6
29	1035	Police-station Teknaf, mauza Dakhinnilla, taluk Khayumo, and others.	2,206 1 0	239 15 0	Do. ..	Monjal, son of Repuo Choudhury, of Nilla, and others.	3,309 1 0	329 14 9	3,638 15 9
30	1823	Police station Cox's Bazar, mauza Choufuldandi, taluk Durga Charan.	1,456 0 0	148 15 6	Do. ..	Khan Sahib Muzaffar Ahmed Choudhury, son of Asharaf Ali Choudhury, of Choufuldandi.	637 0 0	65 3 0	702 3 0
31	36903	Police-station Ramoo, mauza Uttarmitasari, taluk Abdul Kuddus.	603 8 0	56 9 9	Do. ..	Abdul Kuddus, son of Ismail Choudhury, of Uttarmitasari.	491 12 0	50 11 3	542 7 3
32	47148	Police-station Cox's Bazar, mauza Khuruskul, ijara Asharaf Ali.	615 12 0	79 5 9	Do. ..	Khan Sahib Mujaffar Ahmad Choudhury, son of Asharaf Ali Choudhury, of Choufuldandi.	154 0 0	22 5 3	176 5 3
33	878	Police-station Teknaf, mauza Dakhinnilla, ijara Sm. Khuyamo.	821 9 0	99 12 0	Do. ..	Mongjal, son of Repu Choudhury, of Nilla, and others.	1,026 13 0	114 12 6	1,141 9 6
34	1811	Police-station Ramoo, mauza Kassapia, ijara Alimadan Choudhury.	1,400 0 0	151 13 3	Do. ..	Ms. Hakim Meah, son of Ali Hosain, of Garjania, and others.	1,199 0 0	139 1 6	1,338 1 6
35	1812	Police-station Ramoo, mauza Kassapia, ijara Alimaddin Choudhury.	1,425 12 0	251 12 0	Do. ..	Abdul Sattar Sadagar, son of Abdul Gafur, of Gosaildenga, police-station Double Moorings	888 4 0	153 0 6	1,041 4 6

These noabad taluks and ijaras are being advertised for sale for instalments of rent and cesses due on or before the 30th November 1934, of which the latest date of payment was 12th January 1935 A.D.

Chittagong, the 13th February 1935.

K. G. MURSHED, Addl. Collector.

Notification A.

NOTICE is hereby given, under sections 6 and 13, Act XI of 1859, that the undermentioned estates and shares of estates in the district of Faridpur will be put up for sale at the office of the Collector of that district on the 26th March 1935, at 11 a.m., for arrears of revenue (and other demands which by law are realisable as arrears of land revenue).

When in columns 5, 7 and 9 of the following statement it is stated that only a share is to be sold, it is to be understood that a separate account is kept for that share :—

Tauzi No.	Name of mahal and pargana.	Sadar jama of the whole estate.	Whether the whole estate is to be sold.	If only a share is to be sold, specification of such share or shares.	Names of proprietors of property to be sold.	If only a share is to be sold, the sadar jama of such share.	If the whole estate is to be sold, the arrears due from it.	If only a share is to be sold, the arrears due from it.
1	2	3	4	5	6	7	8	9
		Rs. a. p.				Rs. a. p.	Rs. a. p.	Rs. a. p.
1141	Taluk Narayanpur kismat, pargana Telihati Amirabad.	2,659 6 11	No ..	Residuary share consisting of 12 annas share only. All other shares than that specified above will be excluded from sale, viz., Separate account No. 1 of 4 annas share.	Nani Bala Dasi as guardian of minor sons Anadinath and Abani Nath Das and others.	1,994 8 11	..	555 15 0
1201	Taluk Ramchandrapur kismat, pargana Nasibsahi.	2,080 6 11	Whole	....	Sourindra Mohan Guha Roy.	..	861 7 3	..
6386	Diara Taluk Bhagaban Chandra Ray and others, surplus land of kismat Bajitpur, pargana Tarpe Kamrapur.	730 0 0	Do. ..	....	Jogendra Chandra Guha Ray.	..	730 0 0	..
6447	Taluk Raja Harish Chandra Chaudhury, surplus land of Noinua known as Sakhipur kismat resumed by Deara, pargana Ranvawal Tappa.	977 0 0	Do. ..	....	Jogamaya *alias* Indra Bala Chaudhurani.	..	973 0 0	..
6449	Deara Taluk Rajbehari Roy, surplus land of Dotali Lafil *alias* Bhaga kismat, pargana Kartikpur Sujabad.	1,555 0 0	Do. ..	....	Munshi Mesbahauddin Ahammed Choudhury, self and as trustee.	..	2,024 8 0	..
6498	Deara Taluk Madan Mohan Banerjee, alluvial accretion to Mahiskhali Char, pargana Nasti.	2,293 0 0	Do. ..	....	Madan Mohan Banerjee	..	1,195 0 0	..
6504	Deara Taluk Golam Ahmed Choudhury, alluvial accretion to Char Dubail resumed by Deara, pargana Jalalpur.	2,662 0 0	Do ..	....	Gobinda Lall Mukhopadhay.	..	600 0 0	..
6604	Taluk Char Chanda I, pargana Amirabad.	1,137 0 0	Do. ..	....	Jogamaya *alias* Indrabala Devi Chaudhurani.	..	814 12 0	..
7165	Taluk Ananta Deb Ray, by partition Narendra Nath Basak and others, pargana Baikunthapur.	784 6 0	Do. ..	....	Sasabindu Nath Basak and others.	..	294 3 0	..

N.B.—This notification is issued in respect of instalments of revenue due on or before the 30th Agrahyan, 1341 B.S., of which the latest date of payment was 12th January 1935.

Faridpur, the 14th February 1935. [ILLEGIBLE], *for* Collector.

Notification A.

NOTICE is hereby given, under sections 6 and 13, Act XI of 1859, that the undermentioned estates in the district of Chittagong will be put up for sale at the office of the Collector of that district on the 22nd March 1935, at 12 noon, for arrears of revenue and other demands which by law are realisable as arrears of land revenue.

When in columns 5, 7 and 9 of the following statement it is stated that only a share is to be sold, it is to be understood that a separate account is kept for that share:—

Tauzi No.	Name of mahal and pargana.	Sadar jama of whole estate.	Whether the whole estate is to be sold.	If only a share is to be sold, specification of such share or shares.	Names of proprietors of property to be sold.	If only a share is to be sold, the sadar jama of such share.	If the whole estate is to be sold, the arrears due from it.	If only a share is to be sold, the arrears due from it.
1	2	3	4	5	6	7	8	9
		Rs. a. p.				Rs. a. p.	Rs. a. p.	Rs. a. p.
55	Thanas Hathazari, Raozan and Town, taraf Aziz Nasarath.	791 12 0	Whole	....	Surendra Lal Das and others.	..	725 11 11	..
57	Thanas Hathazari, Fatickchari and Patiya, taraf R. D. Baruz.	10,573 15 0	Do. .	....	Rai Upendra Lal Roy Bahadur and others.	..	1,088 13 0	.
64	Thana Fatickchari, Nilam Anandi Manullah.	1,160 0 3	Do. ..	..	Sachindra Nath Nandi and others.	..	688 14 3	.
388	Thanas Sitakund and Town, taraf Ahamedullah and Nasarullah.	729 6 0	Do. ..	....	Abdul Gani Chowdhury.	..	263 11 0	..
396	Thanas Sitakund and Raozan, taraf Baksha Ali.	935 14 0	Do. ..	....	S. M. Shafiaulsa Chowdhury and others.	..	245 8 4	..
486	Thana Fatickchari, taraf Barahi Charan.	502 9 3	Do. ..	....	Abdul Bari Chowdhury.	..	353 6 3	..
519	Thana Mireswari, taraf Bijoy Narayan.	566 0 1	Do. ..	....	Abinash Ch. Deb Chowdhury and others.	..	156 7 6	..
522	Thanas Mireswari, Ramoo, Town, Sitakund, Banskhali, Satkania, Anwara and Fatickchari, kismat Biswasari, Rt. taraf Gouri Sankar Kanungoe.	1,221 11 0	Do. ..	....	Faiz Ali Chowdhury and others.	..	356 11 0	..
580	Thanas Patiya, Town and Hathazari, Nilam Bhuban Mohan.	1,419 5 0	Share	Residuary share with an interest of 15 as. 10 k. 8 21666/42011 kt. (All other shares than that specified will be excluded from sale.)	Uzir Ali .	1,407 13 6	..	1,445 9 10
660	Thanas Patiya, Satkania and Hathazari, taraf Chatra Narayan Kanungoe.	840 10 4	Do. ..	Residuary share with an interest of 12 as. 2k. 14 598/807kt. (All other shares than that specified will be excluded from sale.)	Kali Mohan Saha and others.	642 7 11	..	503 4 11
746	Thana Mireswari, taraf Chiti Doulat.	2,904 10 10	Whole	....	Shek Abul Basar Md. Sayasta Khan.	..	1,660 10 10	..
764	Thanas Hathazari, Patiya, Raozan and Town, taraf Darpa Narayan.	2,902 9 0	Do. ..	....	Jagabandhu Mahajan and others.	..	513 6 1	..
834	Thana Raozan, taraf Debi Sing.	1,103 3 0	Do. ..	....	Shew Dayal Singh Hazari and others.	..	855 2 9	..
942	Thana Fatickchari, Nilam Fakir Chand.	646 14 0	Do. ..	....	Abdul Bari Chowdhury and others.	..	203 1 8	..
943	Thana Raozan, taraf Fatch Singh.	2,268 5 0	Do. ..	....	Promoda Ranjan Dutta, Receiver on behalf of the estate Ram Din Hazari.	..	5,081 12 0	..
1099	Thanas, Town, Patiya, Satkania, Hathazari, Fatickchari, Raozan, Mireswari and Sitakund, taraf Gouri Charan Kanungoe.	2,321 9 0	Do. ..	....	Dipchand Chowdhury and others.	..	1,991 9 0	..
1100	Thanas Patiya, Fatickchari, Satkania, Raozan, Town, Mireswari, and Hathazari, taraf Gouri Sankar.	1,232 3 2	Share ..	Residuary share with an interest of 11 as. 5 g. 3 c. 1 k. 6 til. (All other shares than that specified will be excluded from sale.)	Amiya Krishna Roy and others.	868 7 8	..	825 4 8

Tauzi No.	Name of mahal and pargana.	Sadar jama of whole estate.	Whether the whole estate is to be sold.	If only a share is to be sold, specification of such share or shares.	Names of proprietors of property to be be sold.	If only a share is to be sold, the sadar jama of such share.	If the whole estate is to be sold, the arrears due from it.	If only a share is to be sold, the arrears due from it.
1	2	3	4	5	6	7	8	9
		Rs. a. p.				Rs. a. p.	Rs. a. p.	Rs. a. p.
1116	Thanas Fatickchari and Town, taraf Ghanashyan Kanungoe.	1,670 11 6	Whole	....	Makhalasar Rahaman Chowdhury.	..	757 1 6	..
1121	Thanas Patiya, Raozan, Town and Satkania, taraf Hari Har Kanungoe.	973 1 0	Do. ..	....	Keshab Ch. Bhattacharji and others.	..	236 10 3	..
1145	Thana Mireswari, taraf Hasan Rahaman Beg.	711 5 3	Do. ..	....	Makhaluk Rahaman Chowdhury and others.	..	210 11 7	..
1218	Thanas Hathazari, Patiya, Raozan and Town, Kismat Henry, south of Edward Market and Bibi Barjins Buruz, Bt. taraf Ishan Ch. Kanungoe.	1,447 9 0	Share ..	Residuary share with an interest of 8 annas. (All other shares than that specified will be excluded from sale.)	Surendra Lal Das and others.	723 13 2	..	662 13 2
1238	Thanas Patiya, Hathazari, Raozan and Town, taraf Imas Ayap.	2,265 15 8	Do.	Residuary share with an interest of 9 as. 6 p. 19 kt. (All other shares than that specified will be excluded from sale.)	Sadak Ali Munshi and others.	1,354 8 7	..	707 14 7
1242	Thanas Satkania, C. S. Banskhali, Patiya, C. S. Anwara, taraf Imam Baksha.	697 0 6	Whole	....	Ijjatali Chowdhury.	..	696 14 5	.
1270	Thanas Satkania and Patiya, taraf Joyram Chowdhury.	1,416 5 6	Share	Residuary share with an interest of 4 as. 3 p. 3 kt. Share No. 2 with an interest of 3 as. 8 p. 17 kt. (All other shares than those specified will be excluded from sale.)	Sm. Kusum Kamini Gupta. Rashid Ahmed and others.	Residue— 377 5 2 Share No. 2— 330 13 7 708 2 9	..	Residue— 384 14 2 Share No. 2— 165 0 0 549 14 2
1282	Thanas Town, Patiya, Satkania, Ramoo, Hathazari and Fatickchari, taraf Jabardasta Khan.	6,529 8 0	Whole	....	Birendra Krishna Roy Chowdhury and others.	..	3,730 1 3	..
1285	Thana Mireswari, taraf Jarip Mahammad.	783 12 6	Do.	....	Nalini Ranjan Roy Chowdhury and others.	.	842 9 4	..
1303	Thanas Town, Mireswari and Sitakund, taraf Jadunadan.	1,205 14 0	Share	Share No. 1 with an interest of 7 as. 6 p. 15 kt. (All other shares than that specified will be excluded from sale.)	Harendra Kumar Roy Chowdhury.	571 14 5	..	523 14 8
1460	Thanas Satkania and Patiya, taraf Kumar Kully.	1,015 13 0	Whole	....	Emdad Ahamed Chowdhury and others.	..	950 5 2	..
1671	Thanas Patiya and Raozan, taraf Kooza Howa Shang.	1,127 12 7	Do.	....	Syedar Rahaman Sadagar.	..	1,127 12 6	..
1714	Thanas Hathazari, Town and Mireswari, Nilam Lakshmi Narayan.	1,107 15 0	Share	Residuary share with an interest of 11 as. 9 p. 18 kt. Share No. 1 with an interest of 2 as. 1 p. 1 kt. Share No. 2 with an interest of 2 as. 1 p. 1 kt. (All other shares than those specified will be excluded from sale.)	Sarada Charan Naha. Shek Ebadulla Chowdhury. Shek Mahammad Habibullah Meah and others.	Residue— 885 10 0 Share No. 1— 156 10 0 Share No. 2— 155 10 3 1,197 15 0	.. .. ..	Residue— 209 10 11 Share No. 1— 70 13 3 Share No. 2— 18 12 0 299 4 11
1747	Thanas Hathazari, Patiya, Town and Raozan, taraf Monohar Roy.	2,486 12 9	Do. ..	Residuary share with an interest of 8 p. 4½kt. Share No. 2 with an interest of 4p. 7½kt. Share No. 3 with an interest of 3as. 3p. 5kt. (All other shares than those specified will be excluded from sale.)	Girish Ch. Ghosh Surendra Lal Chakraborty. Amarendra Krishna Roy and others.	Residue— 106 10 0 Share No. 2— 56 12 1 Share No. 3— 508 14 9 672 4 10	.. .. ..	Residue— 79 4 0 Share No. 2— 42 15 0 Share No. 3— 465 14 9 588 1 9

Tauzi No.	Name of mahal and pargana.	Sadar jama of whole estate.	Whether the whole estate is to be sold.	If only a share is to be sold, specification of such share or shares.	Names of proprietors of property to be sold.	If only a share is to be sold, the sadar jama of such share.	If the whole estate is to be sold, the arrears due from it.	If only a share is to be sold, the arrears due from it.
1	2	3	4	5	6	7	8	9
		Rs. a. p.				Rs. a. p.	Rs. a. p.	Rs. a. p.
1884	Thana Fatickchari, taraf Mahammad Sana Mir.	785 10 3	Whole	....	Purna Ch. Pal ..	..	785 10 2	..
1887	Thanas Fatickchari, and Hathazari, taraf Md. Raja Mir.	540 6 6	Do. ..	....	Nazab Ali Chowdhury and others.	..	288 7 1	..
1889	Thanas Hathazari and Raozan, taraf Mahammad Safi Nazir.	548 13 0	Do. ..	....	Sachindra Nath Nandi and others.	.	52 2 4	..
2099	Thanas Sitakund, Hathazari, Banskhali, Satkania, Patiya, Town, Mireswari and Anwara, Kismat Murari Dhar Kanungoe and Nil Kamal Sen, Bt. taraf Gouri Sankar Kanungoe.	1,220 9 0	Share	Share No. 4 with an interest of 14gds. 1c.	Kishori Mohan Dutta and others.	Share No 4— 57 9 9	..	Share No. 4— 21 3 5
				Share No. 6 with an interest of 3gds. 2c. 10til.	Upendra Krishna Roy.	Share No. 6— 12 15 9	..	Share No. 6— 5 14 7
				Share No. 7 with an interest of 1a. 5g. 1k. 10 til.	Srijucta Kusumkumari Gupta.	Share No. 7— 96 9 0	..	Share No. 7— 88 9 0
				Share No. 8 with an interest of 6 as. 3 g. 2 c. 1 k. 15 til.	Manasha Charan Dhar.	Share No. 8— 475 5 0	..	Share No. 8— 237 10 6
						642 7 6		353 5 6
				(All other shares than those specified will be excluded from sale.)				
2203	Thanas Raozan and Town, taraf Nasim Chowdhury.	659 7 6	Do. ..	Residuary share with an interest of 8 as. 9 p. 12 kt.	Nil Krishna Roy	Residue— 362 11 4	..	Residue— 344 9 2
				Share No. 1 with an interest of 6 annas.	Durjuti Kumar Dutta and others.	Share No. 1— 247 4 11	..	Share No. 1— 173 13 7
						610 0 3		518 6 9
				(All other shares than those specified will be excluded from sale.)				
2349	Thanas Hathazari, Raozan, Patiya and Satkania, taraf Utshab Ram Chowdhury.	720 13 0	Whole	....	Ramesh Ch. Chowdhury and others.	..	61 5 0	..
2432	Thanas Hathazari, Patiya, Raozan, Town, Fatickchari and Anwara, Kismat Pran Krishna, Gopi Mohan, Guru Das, Hara Das Roy, Bt. taraf Jugal Kishore	3,352 7 0	Share	Residuary share with an interest of 10 as. 4 p. 19⅓ kt.	Kumar Sarat Kumar Roy.	Residue— 2,182 10 6	..	Residue— 1,406 15 5
				Share No. 6 with an interest of 6 p. 14⅓ kt.	Mukhada Ranjan Roy.	Share No. 6— 117 1 6		Share No. 6— 20 0 1
				Share No. 9 with an interest of 1 p. 8 kt.	Sailendra Krishna Roy.	Share No. 9— 24 8 0		Share No. 9— 41 0 9
				Share No. 15 with an interest of 1 p. 14⅓ kt.	Sarat Ch. Sarkar and others.	Share No. 15— 20 14 3		Share No. 15— 28 3 1
				Share No. 16 with an interest of 1 p. 14⅓ kt.		Share No. 16— 30 14 6		Share No. 16— 29 2 4
				Share No. 17 with an interest of 1 p. 11 3015/5616 kt.		Share No. 17— 27 15 0		Share No.17— 14 13 6
				Share No. 18 with an interest of 1p.		Share No. 18— 17 7 11		Share No. 18— 16 7 11
				Share No. 19 with an interest of 3 p. 7 kt.		Share No. 19— 58 2 3		Share No. 19— 54 5 1
				Share No. 20 with an interest of 1 p. 18 kt.		Share No. 20— 33 2 7		Share No. 20— 31 5 7
				Share No. 21 with an interest of 18⅓kt.		Share No. 21— 16 2 10		Share No. 21— 15 3 8
						2,537 15 4		1,666 0 5
				(All other shares than those specified will be excluded from sale.)				
2433	Thanas Fatickchari, Hathazari, Raozan, C. S. Hathazari, Patiya, Town and Anwara, taraf Pran Ballav.	944 5 5	Whole	....	Surendra Lal Chowdhury.	..	407 11 3	..
2467	Thanas Satkania and Patiya, taraf Rahaman Talip.	601 10 0	Do ..	....	Shek Makbul Ali Chowdhury.	..	42 15 5	..
2544	Thanas Patiya, Hathazari, Raozan and Town, taraf Ram Mohan Sen.	883 6 0	Do. ..	....	Hazi Asharaf Ali Sawdagar.	..	883 6 0	..
2553	Thanas Patiya, Raozan and Satkania, taraf Raj Ballav Kanungoe.	698 9 9	Do. ..	....	Kali Mohan Saha and others.	..	663 9 8	..

Tauzi No.	Name of mahal and pargana.	Sadar jama of whole estate.	Whether the whole estate is to be sold.	If only a share is to be sold, specification of such share or shares.	Names of proprietors of property to be sold.	If only a share is to be sold, the sadar jama of such share.	If the whole estate is to be sold, the arrears due from it.	If only a share is to be sold, the arrears due from it.
1	2	3	4	5	6	7	8	9
		Rs. a. p.				Rs. a. p.	Rs a. p.	Rs. a. p.
2554	Thanas Chakaria, Patiya, Town and Raozan, taraf Ram Sundar Kanungoe.	849 6 6	Whole ..	....	Jinnat Ali Chowdhury and others.	..	795 14 0	..
2556	Thanas Fatickchari, Hathazari, Raozan, Patiya and Town, taraf Raghab Manuhar Kanungoe	1,035 8 0	Share ..	Residuary share with an interest of 6as 7p. 10kt.	Manindra Nath Biswas and others.	Residue— 429 12 11	..	Residue— 0 3 6
				Share No. 4 with an interest of 3as 8p. 2kt.		Share No. 4— 239 12 0		Share No. 4— 234 14 10
				(All other shares than those specified will be excluded from sale.)		669 8 11		235 2 4
2567	Thana Raozan, taraf Raj Jugal Kishore Nanda Kishore Nandi.	570 9 0	Whole	....	Suresh Chandra and others.	..	216 3 3	..
2860	Thanas Patiya, Raozan, Fatickchari, Satkania, Sitakund, Mireswari, Anwara, Hathazari and Chakaria, taraf Shambhoo Ram Kanungoe.	4,210 4 0	Share ..	Share No. 2 with an interest of 8as. 7p. 3kt.	Ram Chandra Sukul.	Share No. 2— 2,259 8 4	..	Share No. 2— 1,188 11 7
				Share No. 4 with an interest of 1 kt.	Rasik Ch. Sen .	Share No. 4— 1 1 7		Share No. 4— 1 1 7
				Share No. 6 with an interest of 2as. 3p. 11 kt.	Aswini Kumar Saha and others.	Share No. 6— 603 11 1		Share No. 6— 552 10 7
				(All other shares than those specified will be excluded from sale.)		2,864 5 0		1,692 7 9
2861	Thanas Raozan, Hathazari and Patiya, taraf Sadaram Chowdhury.	1,097 2 9	Do. ..	Residuary share with an interest of 8 kt.	Ali Ahmed Chowdhuri.	Residue— 1 11 8	..	Residue— 0 7 8
				Share No. 1 with an interest of 7as. 11p. 16kt.	Jogesh Ch. Dhar and others.	Share No. 1— 548 0 0		Share No. 1— 318 14 10
				(All other shares than those specified will be excluded from sale.)		549 11 8		319 6 6
3054	Thanas Raozan, Hathazari, Patiya, Town and Fatickchari, taraf Shib Durga Charan Chowdhury.	2,942 0 0	Do. .	Share No. 2 with an interest of 3as. 4p. 19kt.	Kamal Kumar Roy.	Share No. 2— 628 1 10	..	Share No. 2— 708 12 9
				Share No. 9 with an interest of 2p. 2kt.	Rajchandra Dhar	Share No. 9— 32 3 0		Share No. 9— 8 8 3
				Share No. 15 with an interest of 1a. 9p. 5kt.	Amarendra Krishna Roy and others.	Share No. 15— 325 9 11		Share No. 15— 300 9 10
				(All other shares than those specified will be excluded from sale.)		985 14 9		1,017 14 10
3056	Thanas Patiya and Satkania, taraf Sitadal Pada.	1,345 10 0	Do. ..	Residuary share with an interest of 12as. 7g. 2c. 13kt.	Jagadish Narayan Raspal.	Residue— 1,057 15 0	..	Residue— 165 11 11
				Share No. 1 with an interest of 3as 4g 17c. 7kt.	Mulchandra Dichit.	Share No. 1— 287 11 0		Share No. 1— 329 11 0
						1,345 10 0		495 6 11
3093	Thanas Rangunia and Chakaria, taraf Sukdeb Roy.	2,541 7 11	Whole	....	Raja Bhuban Mohan Roy.	..	649 15 10	..
3113	Thana Chakaria, taraf Shermat Khan Chowdhuri.	527 6 6	Share ..	Residuary share with an interest of 7as. 4p.	Gura Meah Chowdhuri.	Residue— 241 3 0	..	Residue— 235 3 8
				Share No. 1 with an interest of 5 annas	Maulvi Sultan Ahmed and others.	Share No. 1— 165 10 0		Share No. 1— 124 3 9
				Share No. 2 with an interest of 3as. 8p.		Share No. 2— 120 9 6		Share No. 2— 112 13 4
						527 6 6		472 4 9
3171	Thana Fatickchari, taraf Tita Tewari.	1,495 6 9	Whole	....	Abdul Bari Chowdhury.	.	1,701 6 9	..
3193	Thanas Satkania, Fatickchari, Hathazari, Raozan and Patiya, taraf Taj Singh Hazari.	9,561 13 0	Do. ..	....	Babu Bhupendra Krishna Ghose.	..	8,172 13 0	..

Tauzi No.	Name of mahal and pargana.	Sadar jama of whole estate.	Whether the whole estate is to be sold.	If only a share is to be sold, specification of such share or shares.	Names of proprietors of property to be sold.	If only a share is to be sold, the sadar jama of such share.	If the whole estate is to be sold, the arrears due from it.	If only a share is to be sold, the arrears due from it.
1	2	3	4	5	6	7	8	9
		Rs. a. p.				Rs. a. p.	Rs. a. p.	Rs. a. p
3935	Thanas Fatickchari, Hathazari, Raozan, Satkania and Town, taraf Radha Madhab.	1,810 0 4	Share	Share No. 2 with an interest of 10 p. Share No. 5 with an interest of 3 as. 7 p. 1 kt. (All other shares than those specified will be excluded from sale.)	Tajendra Ch. Dhar Nilkrishna Roy ..	Share No. 2— 98 0 10 Share No. 5— 414 0 0 512 0 10	..	Share No. 2— 42 14 0 Share No. 5— 320 2 10 373 0 10
33049	Thana Chakaria, mauza Manikpur, taluk Tufanali Munshi.	893 4 0	Whole	....	Sm. Golchair Begum and others.	..	384 4 0	..
33294	Thana Chakaria, mauza Harbang, taluk Mobarek Ali, Bt. taluk Chandi Charan and Tarini Charan.	874 0 6	Do. ..	....	Maulvi Md. Soleman Khan.	..	1,088 5 3	..
33673	Thana Satkania, mauza Silkopo, Kaimi Zamidari Anwar Ali, s/o Hasan Ali Chowdhuri, of Burumchara, Bt. Izara Aman Ali.	617 5 0	Do. ..	....	Darbeshali Chowdhury.	..	559 4 11	..
33872	Thanas Town, Hathazari, Fatickchari and Patiya, Kismat Pran Krishna Roy, Bt. taraf Jugal Kishore.	1,611 11 0	Share	Residuary share with an interest of 4 annas. Share No. 1 with an interest of 14 gds. 1 c. Share No. 2 with an interest of 1 a. 1 g. 1 c. 2 kt. 10 til. Share No. 3 with an interest of 14 gds. 1 c. (All other shares than those specified will be excluded from sale.)	Mukunda Ranjan Roy. Nagendra Nath Singh. Rasik Ch. Chowdhury and others.	Residue— 403 7 2 Share No. 1— 71 11 1 Share No. 2— 108 0 2 Share No. 3— 71 11 1 654 13 6	..	Residue— 189 15 11 Share No. 1— 71 11 0 Share No. 2— 108 0 1 Share No. 3— 71 10 11 441 5 11

These estates are being advertised for sale for instalments of revenue which were due on or before the 30th Agrahayan, 1341 B.S., of which the latest date of payment was 12th January 1935.

Chittagong, the 14th February 1935. K. G. MURSHED, Addl. Collector.

Proclamation of Sale.

[See Rule 29.]

NOTICE is hereby given that, under rule 28 in Schedule II to the Bengal Public Demands Recovery Act, 1913, an order has been passed by me for the sale of the property mentioned in the annexed schedule, in satisfaction of the claim of the certificate-holder under the certificate mentioned below amounting, with costs and interest up to date of sale, to the sum of Rs. 132-11-8—

Certificate No. 14M. of 1933-34, under which State Secretary is the certificate-holder and Sudhirendra Kumar Sannyal and another are the certificate-debtors.

The sale will be by public auction, and the property will be put up for sale in the lots specified in the schedule. The sale will be of the property of the certificate-debtors abovenamed as mentioned in the schedule below.

In the absence of any order of postponement, the sale will be held by the undersigned at 12 o'clock on the 18th March 1935 at the Malda Certificate Court. In the event, however, of the debt above specified, and of the costs of the sale, being tendered or paid before the knocking down of any lot, the sale will be stopped.

At the sale the public generally are invited to bid, either personally or by duly authorised agent. The following are the further conditions of sale :—

1. The particulars specified in the schedule below have been stated to the best of the information of the Certificate Officer; but the Certificate Officer will not be answerable for any error, misstatement or omission in this proclamation.

2. The amount by which the biddings are to be increased shall be determined by the officer conducting the sale. In the event of any dispute arising as to the amount bid, or as to the bidder, the lot shall at once be again put up to auction.

3. The highest bidder shall be declared to be the purchaser of any lot, provided always that he is legally qualified to bid, and provided that it shall be in the discretion of the officer holding the sale to decline acceptance of the highest bid when the price offered appears so clearly inadequate as to make it advisable to do so.

4. For reasons recorded, it shall be in the discretion of the officer conducting the sale to adjourn it, subject always to the provisions of rule 32 in Schedule II to the Bengal Public Demands Recovery Act, 1913.

5. In the case of movable property, the price of each lot shall be paid at the time of sale or as soon after as the officer holding the sale directs, and in default of payment the property shall forthwith be again put up and re-sold.

6. In the case of immovable property, the persons declared to be the purchaser shall pay immediately after such declaration a deposit of 25 per cent. on the amount of his purchase-money to the officer conducting the sale, and in default of such deposit the property shall forthwith be put up again and re-sold.

7. The full amount of the purchase-money shall be paid by the purchaser before the office of the Certificate Officer closes on the fifteenth day after the sale of the property, exclusive of such day, or if the fifteenth day be a Sunday or other holiday, then on the first office day after the fifteenth day.

8. In default of payment of the balance of the pruchase-money within the period allowed the property shall be re-sold after the issue of a fresh notification of sale. The deposit, after defraying the expenses of the sale, may, if the Certificate Officer thinks fit, be forfeited to the Government, and the defaulting purchaser shall forfeit all claims to the property or to any part of the sum for which it may be subsequently sold.

Given under my hand and seal, this 5th day of February 1935.

[ILLEGIBLE], Certificate Officer, Malda.

Schedule of Property.

Number of lot.	Description of property to be sold, with the name of each owner where there are more certificate-debtors than one.	The revenue assessed upon the estate or part of the estate if the property to be sold is an interest in an estate or a part of an estate paying revenue to the Government.	Claims (if any) which have been put forward to the property, and any other known particulars bearing on its nature and value.
1	2	3	4
1	16 annas share of tauzi No. 268 borne on the Revenue Roll of the Murshidabad Collectorate. Total area of the estate 1,308·08 acres.	Rs. 795-4 ..	Nil

In the High Court of Judicature at Fort William in Bengal, in Insolvency.

NOTICE OF ADJUDICATION ORDER.

No. 10 of 1935.

Re William Maurice Harrington, residing at No. 47, Creek Row, in the town of Calcutta, and employed as a sub-editor in the "Star of India" at No. 9, Dharramtolla Street, in Calcutta aforesaid, *ex parte* the debtor in person.

ON the 7th day of February 1935 an order was made by the High Court of Judicature at Fort William in Bengal in its insolvency jurisdiction adjudging the above-named as an insolvent.

Note.—All debts due to the estate should be paid to me.

Dated this 14th day of February 1935.

G. M. FALKNER, Official Assignee.

In the High Court of Judicature at Fort William in Bengal, in insolvency.

NOTICE OF ADJUDICATION ORDER.

No. 11 of 1935.

Re Edward Arthur Templeton, residing at No. 108, Collin Street, in the town of Calcutta, a pensioner, *ex parte* the debtor in person.

ON the 7th day of February 1935 an order was made by the High Court of Judicature at Fort William in Bengal in its insolvency jurisdiction adjudging the above-named as an insolvent.

Note.—All debts due to the estate should be paid to me.

Dated this 14th day of February 1935.

G. M. FALKNER, Official Assignee.

In the High Court of Judicature at Fort William in Bengal, in Insolvency.

NOTICE OF ADJUDICATION ORDER.

No. 12 of 1935.

Re Nagendra Nath Ghose, residing at No. 42, Sankar Halder's Lane, in the town of Calcutta, without any occupation, *ex parte* the debtor.

C. C. Ghose, debtor's solicitor.

ON the 11th day of February 1935 an order was made by the High Court of Judicature at Fort William in Bengal in its insolvency jurisdiction adjudging the above-named as an insolvent.

Note.—All debts due to the estate should be paid to me.

Dated this 14th day of February 1935.

G. M. FALKNER, Official Assignee.

In the High Court of Judicature at Fort William in Bengal, in Insolvency.

NOTICE OF ADJUDICATION ORDER.

No. 13 of 1935.

Re Percival Andrew Sharpe, residing at No. 4-1, Camac Street, in the town of Calcutta, an employee in the firm of Messrs. Great Eastern Exchange, Limited, of No. 29, Park Street, Calcutta, *ex parte* the debtor in person.

ON the 11th day of February 1935 an order was made by the High Court of Judicature at Fort William in Bengal in its insolvency jurisdiction adjudging the above-named as an insolvent.

Note.—All debts due to the estate should be paid to me.

Dated this 14th day of February 1935.

G. M. FALKNER, Official Assignee.

In the Court of the District Judge of Bakarganj.

INSOLVENCY CASE No. 15 OF 1934.

NOTICE is hereby given that (1) Surjya Kanta Rudra, (2) Nishi Kanta Rudra, (3) Ashutosh Rudra, (4) Surendra Nath Rudra, minor, (5) Ratan Krishna Rudra, minor, the minors Nos. 4 and 5 being represented by their guardian mother Sarajini Rudra, as co-partners of the firm carrying on business at Jhalakati, police-station Jhalakati, district Barisal, in the name and style of Chandra Kanta and Surjya Kanta Rudra Firm, having applied to be adjudicated insolvents failed to proceed with the case and the creditor No. 11 Mati Lal Sen of Chawkbazar, Barisal, applied for permission to proceed with the case and he has been permitted. The case has accordingly been fixed on the 23rd February 1935 for hearing.

A. D. KHAN, Addl. Dist. Judge-in-charge.

Barisal, the 6th February 1935. (431—1)

In the Court of the District Judge of Bakarganj.

INSOLVENCY CASE No. 4 OF 1935.

NOTICE is hereby given that one Kunja Behari Pal and three others of Maharajganj Bandar, police-station Jhalakati, district Bakarganj, have applied before this Court for an order of adjudication against their debtors (1) Kailash Chandra Shaha, (2) Bhadra Kanta Shaha and (3) Sarat Chandra Shaha, son of Kailash Chandra Shaha, of Kotalipara, district Faridpur, at present residing at Subidkhali, police-station Mrijaganj, district Bakarganj, carrying on business at Subidkhali in the name and style of Kailash, Bhadra and Sarat Shaha, and that the 27th February 1935 has been fixed for hearing of the case before this Court.

W. McC. SHARPE, District Judge.

Barisal, the 12th February 1935. (476—1)

In the Court of the District Judge of Bakarganj.

INSOLVENCY CASE No. 5 OF 1935.

NOTICE is hereby given that one Kunja Behari Pal and three others of Maharajganj, police-station Jhalakati, district Bakarganj, have applied before this Court for an order of adjudication against their debtors (1) Annada Charan Shaha, (2) Krishna Kanta Shaha, (3) Kanchi Lal Shaha and (4) Narayan Chandra Shaha of Kotalipara, district Faridpur, at present residing at Patharghata, police-station Patharghata, district Bakarganj, carrying on their joint business in the name and style of Annada, Krishna, Kanchi and Narayan Shaha, and that the 27th February 1935 has been fixed for hearing of the case in this Court.

W. McC. SHARPE, District Judge.

Barisal, the 12th February 1935. (477—1)

In the Court of the District Judge of Bakarganj.

INSOLVENCY CASE No. 6 OF 1935.

NOTICE is hereby given that one Kunja Behari Pal and three others of Maharajganj Bandar, police-station Jhalakati, district Bakarganj, have applied before this Court for an order of adjudication against their debtor Benode Behari Shaha, son of Biswambar Shaha, of village Baraikaran, police-station Nalchhity, district Bakarganj, and that the 28th February 1935 has been fixed for hearing of the case in this Court.

W. McC. SHARPE, District Judge.

Barisal, the 12th February 1935. (478—1)

In the Court of the District Judge of Bakarganj.

INSOLVENCY CASE No. 7 OF 1935.

NOTICE is hereby given that one Kunja Behari Pal and three others of Maharajganj Bandar, police-station Jhalakati, district Bakarganj, have applied before this Court for an order of adjudication against their debtors, (1) Girilal Kunda, (2) Nilkrishna Kunda, (3) Makhan Lal Kunda and (4) Harendra Lal Kunda of Galachipa, police-station Galachipa, district Bakarganj, carrying on there a joint business in the name and style of Girilal, Nilkrishna, Makhan Lal and Harendra Lal Kunda, and that the 28th February 1935 has been fixed for hearing of the case in this Court.

W. McC. SHARPE, District Judge.

Barisal, the 12th February 1935. (479—1)

In the Court of the District Judge of Bankura.

NOTICE is hereby given under clause (*2*) of section 19 of the Provincial Insolvency Act, V of 1920, to his creditors that the insolvency petition of Sayed Iasin, son of late Shiak Durastulla, of Rasulpore, police-station Patrasair, district Bankura, has been admitted by this Court as No. 1 of 1935 and that 27th February 1935 has been fixed for hearing thereof.

S. K. GANGULI, District Judge.

Bankura, the 6th February 1935. (430—1)

NOTICE TO CREDITORS OF APPLICATION FOR DISCHARGE.

Section 41(*1*) of the Provincial Insolvency Act, V of 1920.

In the Court of the District Judge at Chittagong.

INSOLVENCY CASE No. 7 OF 1934.

Abul Hussain, son of Amir Ali Hazi, of Haidchaikka, police-station Fatickcherry, insolvent, applicant.

TAKE notice that the abovenamed insolvent has applied at the Court for his discharge, and that the Court has fixed the 26th day of February 1935, at 11 o'clock, for hearing the application.

Dated this 14th day of January 1935.

E. S. SIMPSON, District Judge.

(196—1)

ORDER OF ADJUDICATION.

Section 27 of the Provincial Insolvency Act, V of 1920.

In the Court of the District Judge at Chittagong.

INSOLVENCY APPLICATION No. 43 of 1933.

PURSUANT to a petition, dated the 15th September 1933, filed by the debtor Mockbul Ali, son of Akbar Ali, of Haidchaikka, police-station Fatickcherry, district Chittagong, and on the application of the debtor himself and on reading the petition and hearing the pleader, it is ordered that the debtor be and the said debtor is hereby adjudged insolvent.

It is further ordered that the debtor do apply for his discharge within 10th May 1935. Mr. J. R. Percival has been appointed Receiver.

Dated this 15th day of January 1935.

E. S. SIMPSON, District Judge.

(201—1)

ORDER OF ADJUDICATION.

Section 27 of the Provincial Insolvency Act, V of 1920.

In the Court of the District Judge at Chittagong.

INSOLVENCY APPLICATION No. 5 of 1934.

PURSUANT to a petition, dated the 19th February 1934, filed by debtor Chand Meah, son of Mobarek Ali Sufi, of Deotala, police-station Anwara, district Chittagong, and on the application of the debtor himself and on reading the petition and hearing the pleader, it is ordered that the debtor be and the said debtor is hereby adjudged insolvent.

It is further ordered that the debtor do apply for his discharge within 10th July 1935. Mr. J. R. Percival has been appointed Receiver.

Dated this 15th day of January 1935.

E. S. SIMPSON, District Judge.

(202—1)

NOTICE TO CREDITORS OF THE DATE OF HEARING OF AN INSOLVENCY PETITION.

Section 19 of the Provincial Insolvency Act, V of 1920.

In the Court of the District Judge at Chittagong.

INSOLVENCY APPLICATION No. 1 OF 1935.

Karam Ali Sawdager, son of late Oli Muhamad of Shikarpur, police-station Hathazari, district Chittagong, post office Gourangabari, creditor, applicant,

versus

Ali Ahmed, son of Tofer Ali, of Madarsha, police-station Hathazari, post office Fatehabad, district Chittagong, debtor, opposite party.

WHEREAS the abovementioned creditor Karam Ali Sawdager has applied to this Court, by a petition, dated 20th day of December 1934, to have declared the abovementioned debtor, opposite party, an insolvent under the Provincial Insolvency Act, V of 1920, this is to give notice that the Court has fixed the 23rd day of February 1935 for the hearing of the aforesaid petition and the examination of the creditor.

E. S. SIMPSON, District Judge.

Chittagong, the 16th January 1935. (217—1)

NOTICE TO CREDITORS OF APPLICATION FOR DISCHARGE.

Section 41(*1*) of the Provincial Insolvency Act, V of 1920.

In the Court of the District Judge at Dacca.

INSOLVENCY CASE No. 5 OF 1933.

Prasanna Kumar Sen, son of late Hari Mohan Sen, resident of 53, Sankartola, police-station Sutrapur, district Dacca, insolvent.

TAKE notice that the abovenamed insolvent has applied at the Court for his discharge, and that the Court has fixed the 25th day of February 1935 at 10 o'clock for hearing the application.

Dated this 29th day of January 1935.

E. B. H. BAKER, District Judge.

(344—1)

NOTICE TO CREDITORS OF APPLICATION FOR DISCHARGE.

Section 41(*1*) of the Provincial Insolvency Act, V of 1920.

In the Court of the District Judge at Dacca.

INSOLVENCY CASE No. 23 OF 1933.

Kshetra Mohan Sil, son of late Madhab Chandra Sil, of Radhakantapur Rauthhati, police-station Nawabganj, district Dacca, insolvent.

TAKE notice that the abovenamed insolvent has applied at the Court for his discharge, and that the Court has fixed the 26th day of February 1935 at 10 o'clock for hearing the application.

Dated this 29th day of January 1935.

E. B. H. BAKER, District Judge.

(345—1)

NOTICE TO CREDITORS OF APPLICATION FOR DISCHARGE.

Section 41 (*1*) of the Provincial Insolvency Act, V of 1920.

In the Court of the District Judge at Dacca.

INSOLVENCY CASE No. 24 OF 1933.

Pyari Mohan Sil, son of late Madhab Chandra Sil, of Radhakantapur Rauthhati, police-station Nawabganj, district Dacca, insolvent.

TAKE notice that the abovenamed insolvent has applied at the Court for his discharge, and that the Court has fixed the 26th day of February 1935 at 10 o'clock for hearing the application.

Dated this 29th day of January 1935.

E. B. H. BAKER, District Judge.

(346—1)

NOTICE TO CREDITORS OF APPLICATION FOR DISCHARGE.

Section 41 (*1*) of the Provincial Insolvency Act, V of 1920.

In the Court of the District Judge at Dacca.

INSOLVENCY CASE No. 25 OF 1933.

Lal Mohan Sil, son of late Madhab Chandra Sil, of Radhakantapur Rauthhati, police-station Nawabganj, district Dacca, insolvent.

TAKE notice that the abovenamed insolvent has applied at the Court for his discharge, and that the Court has fixed the 26th day of February 1935 at 10 o'clock for hearing the application.

Dated this 29th day of January 1935.

E. B. H. BAKER, District Judge.

(347—1)

NOTICE TO CREDITORS OF APPLICATION FOR DISCHARGE.

Section 41(*1*) of the Provincial Insolvency Act, V of 1920.

In the Court of the District Judge at Dacca.

INSOLVENCY CASE No. 26 OF 1933.

Naduram Sil, son of late Madhab Chandra Sil, of Radhakantapur Rauthhati, police-station Nawabganj, district Dacca, insolvent.

TAKE notice that the abovenamed insolvent has applied at the Court for his discharge, and that the Court has fixed the 26th day of February 1935 at 10 o'clock for hearing the application.

Dated this 29th day of January 1935.

E. B. H. BAKER, District Judge.

(348—1)

In the 3rd Court of the Sub-Judge, Dacca.

INSOLVENCY CASE No. 3 OF 1935.

Harendra Chandra Das, son of late Pratap Chandra Das, of Birpur, police-station Narshingdi, district Dacca, petitioner.

NOTICE is hereby given to all that abovenamed petitioner has filed a petition for insolvency in this Court on 3rd January 1935, and the date of hearing of this case has been fixed on 23rd February 1935 for examination of the petitioner.

R. C. SEN, Sub-Judge.

Dacca, the 12th February 1935. (481—1)

In the Court of the District Judge of Hooghly.

NOTICE is hereby given, under clause (*2*) of section 12 of the Provincial Insolvency Act, V of 1920, to his creditors that the insolvency petition of Roja Mea, son of Niamat Mea, of Serampore, thana Serampore, district Hooghly, has been admitted by this Court as No. 110 of 1934 and that the 25th February 1935 has been fixed for the hearing thereof.

S. SEN, District Judge.

Chinsura, the 25th January 1935. (310—1)

In the Court of the Addl. District Judge of Hooghly at Howrah.

INSOLVENCY CASE No. 20 OF 1934.

NOTICE is hereby given that Upendra Nath Sadhkhan, son of late Mahesh Chandra Sadhkhan, of Koral, thana Domejur, district Howrah, was on the 30th day of November 1934 adjudicated an insolvent and directed to apply for final discharge within one year.

S. N. MODAK, Addl. District Judge.

Howrah, the 5th January 1935. (121—1)

In the Court of the Addl. District Judge of Hooghly at Howrah.

INSOLVENCY CASE No. 5 OF 1933.

NOTICE is hereby given that Mahadeb Rakshit and Jahar Lal Rakshit, proprietors of the firm Mahadeb Rakshit Jahar Lal Rakshit, sons of late Banamali Rakshit, of Ramchandrapur, thana Sankrail, district Howrah, were on the 12th day of September 1934 adjudicated insolvents and directed to apply for final discharge within one year.

S. N. MODAK, Addl. District Judge.

Howrah, the 15th January 1935. (218—1)

In the Court of the Addl. District Judge of Hooghly at Howrah.

INSOLVENCY CASE No. 49 OF 1934.

NOTICE is hereby given that J. Bruce Hamilton of 49, Tandelbagan, thana Golabari, district Howrah, was on the 10th day of August 1934 adjudicated an insolvent, and directed to apply for final discharge within one year.

S. N. MODAK, Addl. District Judge.

Howrah, the 15th January 1935. (248—1)

In the Court of the Addl. District Judge of Hooghly at Howrah.

NOTICE is hereby given under the Provincial Insolvency Act, V of 1920, to his creditors that the insolvency petition of Satya Prasanna Mukherjee, son of late Priya Nath Mukherjee, of 32, Sadur Das Lane, thana Shibpur, district Howrah, has been admitted by this Court as No. 240 of 1934, and that the 23rd February 1935 has been fixed for the hearing thereof.

S. N. MODAK, Addl. District Judge.

Howrah, the 2nd February 1935. (457—1)

In the Court of the District Judge of Khulna.

INSOLVENCY CASE No. 3 OF 1934.

IT is hereby notified that Jogendra Nath Chakrabarti and Hemendra Nath Chakrabarti, sons of late Paresh Nath Chakrabarti, of Senhati Goalpara, police-station Daulatpur, district Khulna, have been adjudicated as insolvents on 21st December 1934 and have been directed to apply for final discharge within a year.

K. C. CHUNDER, District Judge.

Khulna, the 24th January 1935. (295—1)

In the Court of the District Judge of Khulna.

INSOLVENCY CASE No. 9 OF 1933.

IT is hereby notified that Smarajit Chandra Bannerji, son of late Prio Nath Bannerji, of Khulna town, has been granted absolute discharge as an insolvent on 26th January 1935.

K. C. CHUNDER, District Judge.

Khulna, the 27th January 1935. (321—1)

In the Court of the District Judge of Murshidabad.

INSOLVENCY CASE No. 5 OF 1935.

In the matter of Nrisinha Prasad Ghosh, son of late Ramlal Ghosh, of Dattabarutia, police-station Bharatpore, district Murshidabad, debtor-petitioner.

NOTICE is hereby given to all concerned that the abovenamed debtor has applied to this Court for being adjudicated an insolvent, and that the 23rd day of February 1935 has been fixed for hearing of his application.

G. B. SYNGE, District Judge.

Berhampore, the 1st February 1935. (386—1)

In the Court of the District Judge of Mymensingh.

INSOLVENCY CASE No. 4 OF 1935.

NOTICE is hereby given that Rajani Kanta Gupta *alias* Rajani Kanta Sutradhar, son of late Bholanath Gupta Sutradhar, of village Sabali, police-station Tarail, district Mymensingh, has this day applied to this Court for being adjudicated as insolvent and that the 25th day of February 1935 has been fixed for hearing of the said application.

H. G. S. BIVAR, District Judge.

Mymensingh, the 29th January 1935. (333—1)

In the Court of the District Judge of Nadia.

WAKF CASE No. 3 OF 1934.

Sayed Rousan Ali of Jhaudia, thana Kushtia, district Nadia, mutwalli.

WHEREAS statement of particulars under section 3 of the Mussalman Wakf Act 42 of 1923 has been filed in the above case, it is hereby notified under section 4 of the said Act for the information that any person may apply to the Court by a petition in writing accompanied by the prescribed fee for the issue of an order requiring the mutwalli to furnish further particulars and statement.

A. M. AHMAD, District Judge.

Krishnagar, the 24th January 1935. (283—1)

In the Court of the District Judge of Nadia.

INSOLVENCY CASE No. 67 OF 1934.

Firm carrying on business under the name and style of Nehal Chand Baijanath of Nabadwip, police-station Nabadwip, district Nadia, petitioner.

NOTICE is hereby given, under clause 2 of section 19 of the Provincial Insolvency Act, V of 1920, to his creditors that the abovenamed petitioner has filed an insolvency petition and that 23rd February 1935 has been fixed for the hearing thereof.

A. M. AHMAD, District Judge.

Krishnagar, the 30th January 1935. (323—1)

ORDER OF ADJUDICATION.

Section 27 of the Provincial Insolvency Act, V of 1920.

In the Court of the District Judge of Pabna and Bogra.

INSOLVENCY CASE No. 46 OF 1934.

NOTICE is hereby given that petitioning debtor Amiruddin Pramanik, son of late Sabed Pramanik, of Jotkalsa, police-station and district Pabna, was adjudged an insolvent by an order of this Court, dated the 12th January 1935, and he has been directed to apply for his discharge within six months.

B. K. BASU, District Judge.

Pabna, the 2nd February 1935. (399—1)

In the Court of the District Judge of Pabna and Bogra.

INSOLVENCY CASE No. 57 OF 1934.

WHEREAS Monser Sheikh, son of late Amani Sheikh, of Babulchara, police-station and district Pabna, has applied to this Court by a petition, dated 19th December 1934, to be declared an insolvent, this is to give notice to all his creditors that the Court has fixed the 28th February 1935 for hearing of the aforesaid application and for examination of the debtor.

B. K. BASU, District Judge.

Pabna, the 2nd February 1935. (400—1)

NOTICE OF ADJUDICATION ORDER.

In the Court of the District Judge of Rajshahi.

INSOLVENCY CASE No. 49 OF 1934.

Re Kamin Shaha of Gandharbbapur, police-station Badalgachi, district Rajshahi.

ON the 13th day of December 1934 an order was passed by this Court adjudging the abovenamed as an insolvent.

[ILLEGIBLE], *for* District Judge.

Rajshahi, the 21st December 1934. (95—1)

ORDER ANNULLING ADJUDICATION.

Section 43 of the Provincial Insolvency Act, V of 1920.

In the Court of the District Judge at Alipore.

INSOLVENCY APPLICATION No. 60 OF 1933.

Bisseswarlal Rambilash, applicants.

WHEREAS Bisseswarlal Rambilash of 4-B, Puddopukur Road, police-station Bhowanipore, 24-Parganas, debtors, do not proceed with the application for discharge, it is ordered that the order of adjudication, dated 15th January 1934, against the said debtors be and the same is hereby annulled.

Dated this 28th day of January 1935.

T. H. ELLIS, District Judge.

In the 4th Court of the Sub-Judge of 24-Parganas.

INSOLVENCY CASE No. 469 OF 1934.

Bhupendra Nath Mukherjee of 108, Hazra Road, police-station Tollygunge, applicant.

To Official Assignee, High Court, Calcutta, and others, creditors.

ON the 3rd day of January 1935 it was ordered that the matter of the petition of the applicant be heard on the 25th day of February 1935, and that the said applicant do attend to be examined by this Court on that date.

J. N. SEN, Sub-Judge.

Alipore, the 9th January 1935. (130—1)

In the 4th Court of the Sub-Judge of 24-Parganas.

INSOLVENCY CASE No. 504 OF 1934.

Sarban Singh of 48, Baloram Bose 1st Lane, Bhawanipore, police-station Bhawanipore, applicant.

To Micheline India Tyre, Ltd., of 19, British Indian Street, Calcutta, and others, creditors.

ON the 3rd day of January 1935 it was ordered that the matter of the petition of the applicant be heard on the 25th day of February 1935, and that the said applicant do attend to be examined by this Court on that date.

J. N. SEN, Sub-Judge.

Alipore, the 9th January 1935. (131—1)

In the 4th Court of the Sub-Judge of 24-Parganas.

INSOLVENCY CASE No. 508 OF 1934.

Kanti Chandra Mondal of 7-1, Gopalnagar Road, Chetla, police-station Alipore, applicant.

To Nagendra Nath Law of 121, Muktaram Basu Street, Calcutta, and others, creditors.

ON the 4th day of January 1935 it was ordered that the matter of the petition of the applicant be heard on the 25th day of February 1935, and that the said applicant do attend to be examined by this Court on that date.

J. N. SEN, Sub-Judge.

Alipore, the 9th January 1935. (132—1)

In the 4th Court of the Sub-Judge of 24-Parganas.

INSOLVENCY CASE No. 518 OF 1934.

Baddhu Sha of Kankinara Bazar, police-station Jagadal, applicant.

To Joy Narayan Mahadeb of Jharia Bazar, district Manbhum, and others, creditors.

ON the 5th day of January 1935 it was ordered that the matter of the petition of the applicant be heard on the 25th day of February 1935, and that the said applicant do attend to be examined by this Court on that date.

J. N. SEN, Sub-Judge.

Alipore, the 10th January 1935. (136—1)

In the 4th Court of the Sub-Judge of 24-Parganas.

INSOLVENCY CASE No. 520 OF 1934.

Krishnapada Rana *alias* Panchanon Rana of Budge Budge, Nandanpore Halderpara, police-station Budge Budge, applicant.

To Chandra Singh of Budge Budge, Parshi Road, police-station Budge Budge, and others, creditors.

ON the 3rd day of January 1935 it was ordered that the matter of the petition of the applicant be heard on the 25th day of February 1935, and that the said applicant do attend to be examined by this Court on that date.

J. N. SEN, Sub-Judge.

Alipore, the 9th January 1935. (137—1)

In the 4th Court of the Sub-Judge of 24-Parganas.

INSOLVENCY CASE No. 533 OF 1934.

Gupta Nand of 32-2, Munshiganj Road, police-station Watgunge, applicant.

To Satya Narayan Tewary of 1-1, Rangalal Street, Calcutta, and others, creditors.

ON the 4th day of January 1935 it was ordered that the matter of the petition of the applicant be heard on the 25th day of February 1935, and that the said applicant do attend to be examined by this Court on that date.

J. N. SEN, Sub-Judge.

Alipore, the 9th January 1935. (139—1)

In the 4th Court of the Sub-Judge of 24-Parganas.

INSOLVENCY CASE No. 534 OF 1934.

Sm. Lakshmi Moni Dassi of Upendra Krishna Mondal Lane, police-station Tollygunge, applicant.

To Dost Mahammad Khan Kabuli of Russa Road South, Tollygunge, and others, creditors.

ON the 4th day of January 1935 it was ordered that the matter of the petition of the applicant be heard on the 25th day of February 1935, and that the said applicant do attend to be examined by this Court on that date.

J. N. SEN, Sub-Judge.

Alipore, the 9th January 1935. (140—1)

In the 4th Court of the Sub-Judge of 24-Parganas.

INSOLVENCY CASE No. 535 OF 1934.

R. L. Hannah of 76, Traffic Quarters, Sealdah, applicant.

To Mahadeolal and Bros. of 1, Tikiapara Road, Howrah, and others, creditors.

ON the 5th day of January 1935 it was ordered that the matter of the petition of the applicant be heard on the 25th day of February 1935, and that the said applicant do attend to be examined by this Court on that date.

J. N. SEN, Sub-Judge.

Alipore, the 10th January 1935. (141—1)

In the 4th Court of the Sub-Judge of 24-Parganas.

INSOLVENCY CASE No. 537 OF 1934.

Mahammad Khan of 21, Fulbagan Road, police-station Entally, applicant.

To Golam Ahamed, guardian of Abul Fazal, minor, of 18, Damzen Lane, Calcutta, creditor.

ON the 5th day of January 1935 it was ordered that the matter of the petition of the applicant be heard on the 25th day of February 1935, and that the said applicant do attend to be examined by this Court on that date.

J. N. SEN, Sub-Judge.

Alipore, the 10th January 1935. (142—1)

In the 4th Court of the Sub-Judge of 24-Parganas.

INSOLVENCY CASE No. 2 OF 1935.

Lalit Mohon Mitra of 3A, Bahir Mirzapore Road, police-station Manicktolla, applicant.

To B. Khetri of No. 3, Thakurdas Chakraverty Street, Beadon Street, and others, creditors.

ON the 4th day of January 1935 it was ordered that the matter of the petition of the applicant be heard on the 25th day of February 1935, and that the said applicant do attend to be examined by this Court on that date.

J. N. SEN, Sub-Judge.

Alipore, the 9th January 1935. (143—1)

ORDER OF ADJUDICATION.

Section 27 of the Provincial Insolvency Act, V of 1920.

In the 4th Court of the Sub-Judge at Alipore.

INSOLVENCY APPLICATION No. 126 OF 1934.

PURSUANT to a petition, dated 29th March 1934, filed by Atul Krishna Basu of 134, Raja Rajendra Lal Mitra Road, police-station Beliaghata, and on the application of the debtor himself and on reading his application and hearing his pleader, it is ordered that the debtor be and the said debtor is hereby adjudged insolvent.

It is further ordered that the debtor do apply for his discharge within six months from this date.

Dated this 4th day of January 1935.

J. N. SEN, Sub-Judge.

(144—1)

ORDER OF ADJUDICATION.

Section 27 of the Provincial Insolvency Act, V of 1920.

In the 4th Court of the Sub-Judge at Alipore.

INSOLVENCY APPLICATION No. 237 OF 1934.

PURSUANT to a petition, dated 11th June 1934, filed by G. A. LeFranc of Garifa, police-station Sonarpore, and on the application of the debtor himself and on reading his application and hearing his pleader, it is ordered that the debtor be and the said debtor is hereby adjudged insolvent.

It is further ordered that the debtor do apply for his discharge within six months from this date.

Dated this 3rd day of January 1935.

J. N. SEN, Sub-Judge.

(145—1)

ORDER OF ADJUDICATION.

Section 27 of the Provincial Insolvency Act, V of 1920.

In the 4th Court of the Sub-Judge at Alipore.

INSOLVENCY APPLICATION No. 274 OF 1934.

PURSUANT to a petition, dated 30th June 1934, filed by Jatindra Nath Mukherjee of Behala, Gholshapore, police-station Behala, and on the application of the debtor himself and on reading his application and hearing his pleader, it is ordered that the debtor be and the said debtor is hereby adjudged insolvent.

It is further ordered that the debtor do apply for his discharge within six months from this date.

Dated this 3rd day of January 1935.

J. N. SEN, Sub-Judge.

(146—1)

ORDER OF ADJUDICATION.

Section 27 of the Provincial Insolvency Act, V of 1920.

In the 4th Court of the Sub-Judge at Alipore.

INSOLVENCY APPLICATION No. 286 OF 1934.

PURSUANT to a petition, dated 7th July 1934, filed by Pichki Badraya of Titagar Jute Mill Criman line, police-station Titagar, and on the application of the debtor himself and on reading his application and hearing his pleador, it is ordered that the debtor be and the said debtor is hereby adjudged insolvent.

It is further ordered that the debtor do apply for his discharge within six months from this date.

Dated this 27th day of November 1934.

J. N. SEN, Sub-Judge.

(147—1)

ORDER OF ADJUDICATION.

Section 27 of the Provincial Insolvency Act, V of 1920.

In the 4th Court of the Sub-Judge at Alipore.

INSOLVENCY APPLICATION No. 302 OF 1934.

PURSUANT to a petition, dated 18th July 1934, filed by Profulla Chandra Mitra of 15, Harish Chatterjee Street, police-station Bhowanipur, and on the application of the debtor himself and on reading his application and hearing his pleader, it is ordered that the debtor be and the said debtor is hereby adjudged insolvent.

It is further ordered that the debtor do apply for his discharge within six months from this date.

Dated this 3rd day of January 1935.

J. N. SEN, Sub-Judge.

(149—1)

ORDER OF ADJUDICATION.

Section 27 of the Provincial Insolvency Act, V of 1920.

In the 4th Court of the Sub-Judge at Alipore.

INSOLVENCY APPLICATION No. 313 OF 1934.

PURSUANT to a petition, dated 24th July 1934, filed by Adhar Chandra Karmakar of Shambabu's lot No. 122, police-station Joynagar, and on the application of the debtor himself and on reading his application and hearing his pleader, it is ordered that the debtor be and the said debtor is hereby adjudged insolvent.

It is further ordered that the debtor do apply for his discharge within six months from this date.

Dated this 3rd day of January 1935.

J. N. SEN, Sub-Judge.

(150—1)

ORDER OF ADJUDICATION.

Section 27 of the Provincial Insolvency Act, V of 1920.

In the 4th Court of the Sub-Judge at Alipore.

INSOLVENCY APPLICATION No. 328 OF 1934.

PURSUANT to a petition, dated 3rd August 1934, filed by Iswan Chandra Ghosh of Rajendrapore, police-station Naihati, and on the application of the debtor himself and on reading his application and hearing his pleader, it is ordered that the debtor be and the said debtor is hereby adjudged insolvent.

It is further ordered that the debtor do apply for his discharge within six months from this date.

Dated this 3rd day of January 1935.

J. N. SEN, Sub-Judge.

(151—1)

NOTICE TO CREDITORS OF APPLICATION FOR DISCHARGE.

Section 41(*1*) of the Provincial Insolvency Act, V of 1920.

In the 4th Court of the Sub-Judge at Alipore.

INSOLVENCY CASE No. 162 OF 1933.

Lakshmi Narayan Nandi of 15, Deb Lane, Entally, police-station Entally, applicant.

TAKE notice that the abovenamed insolvent has applied at the Court for his discharge, and that the Court has fixed the 25th day of February 1935, at 11 o'clock, for hearing the application.

Dated this 9th day of January 1935.

J. N. SEN, Sub-Judge.

(154—1)

NOTICE TO CREDITORS OF APPLICATION FOR DISCHARGE.

Section 41 (*1*) of the Provincial Insolvency Act, V of 1920.

In the 4th Court of the Sub-Judge at Alipore.

INSOLVENCY CASE No. 81 OF 1934.

Behari Lal Das of Chitragunge, police-station Budge Budge, applicant.

TAKE notice that the abovenamed insolvent has applied at the Court for his discharge, and that the Court has fixed the 25th day of February 1935, at 11 o'clock, for hearing the application.

Dated this 4th day of January 1935.

J. N. SEN, Sub-Judge.

(157—1)

NOTICE TO CREDITORS OF APPLICATION FOR DISCHARGE.

Section 41 (*1*) of the Provincial Insolvency Act, V of 1920.

In the 4th Court of the Sub-Judge at Alipore.

INSOLVENCY CASE No. 115 OF 1934.

Sarajit Pandey of Titagarh, police-station Titagarh, 24-Parganas, applicant.

TAKE notice that the abovenamed insolvent has applied at the Court for his discharge, and that the Court has fixed the 25th day of February 1935, at 11 o'clock, for hearing the application.

Dated this 9th day of January 1935.

J. N. SEN, Sub-Judge.

(159—1)

ORDER OF ADJUDICATION.

Section 27 of the Provincial Insolvency Act, V of 1920.

In the 4th Court of the Sub-Judge at Alipore.

INSOLVENCY APPLICATION No. 168 OF 1934.

PURSUANT to a petition, dated 21st April 1934, filed by Mahadeb Prasad Show of 342, Kalighat Road, Pathuriapatty, police-station Kalighat, and on the application of the debtor himself and on reading his application and hearing his pleader, it is ordered that the debtor be and the said debtor is hereby adjudged insolvent.

It is further ordered that the debtor do apply for his discharge within six months from this date.

Dated this 10th day of January 1935.

J. N. SEN, Sub-Judge.

(224—1)

ORDER OF ADJUDICATION.

Section 27 of the Provincial Insolvency Act, V of 1920.

In the 4th Court of the Sub-Judge at Alipore.

INSOLVENCY APPLICATION No. 248 OF 1934.

PURSUANT to a petition, dated 15th June 1934, filed by Tarapada Chatterjee of 5, Monoharpuker Road, police-station Tollygunge, and on the application of the debtor himself and on reading his application and hearing his pleader, it is ordered that the debtor be and the said debtor is hereby adjudged insolvent.

It is further ordered that the debtor do apply for his discharge within six months from this date.

Dated this 10th day of January 1935.

J. N. SEN, Sub-Judge.

(225—1)

In the 4th Court of the Sub-Judge of 24-Parganas.

INSOLVENCY CASE No. 507 OF 1934.

Siri Goala of Kakinara, Baruipara, police-station Jagadal, applicant.

To Sachin Sing of Jagadal and others, creditors.

ON the 10th day of January 1935 it was ordered that the matter of the petition of the applicant be heard on the 11th day of March 1935 and that the said applicant do attend to be examined by this Court on that date.

J. N. SEN, Sub-Judge.

Alipore, the 12th January 1935. (226—1)

In the 4th Court of the Sub-Judge of 24-Parganas.

INSOLVENCY CASE No. 510 OF 1934.

Sukdeb Misir of 256, Russa Road South, Tollygunge, applicant.

To Sm. Bhusanbala Dasi of Mudiali Road, Tollygunge, and another, creditors.

ON the 10th day of January 1935 it was ordered that the matter of the petition of the applicant be heard on the 11th day of March 1935 and that the said applicant do attend to be examined by this Court on that date.

J. N. SEN, Sub-Judge.

Alipore, the 11th January 1935. (227—1)

In the 4th Court of the Sub-Judge of 24-Parganas.

INSOLVENCY CASE No. 525 OF 1934.

Manjhu Mia of 12-1, Lichoobagan, police-station Beliaghata, applicant.

To Messrs. Chaganlal Kalidas of 96 and 97, Harrison Road, Calcutta, and others, creditors.

ON the 12th day of January 1935 it was ordered that the matter of the petition of the applicant be heard on the 11th day of March 1935 and that the said applicant do attend to be examined by this Court on that date.

J. N. SEN, Sub-Judge.

Alipore, the 15th January 1935. (228—1)

In the 4th Court of the Sub-Judge of 24-Parganas.

INSOLVENCY CASE No. 529 OF 1934.

Kamal Chunder Chunder, Sudhansu Kumar Mitter and Santosh Kumar Mitter of 34-1, Elgin Road, police-station Bhawanipore, applicants-creditors.

To E. M. Mani of 40, Dehi Serampore Road, police-station Entally, debtor.

ON the 11th day of January 1935 it was ordered that the matter of the petition of the applicants be heard on the 25th day of February 1935 and that the said applicants do attend to be examined by this Court on that date.

J. N. SEN, Sub-Judge.

Alipore, the 15th January 1935. (229—1)

In the 4th Court of the Sub-Judge of 24-Parganas.

INSOLVENCY CASE No. 7 OF 1935.

Rabindra Kumar Bhattacherjee of Bijpore, 350, Railway Block, 24-Parganas, applicant.

To Sukur Khan Kabuli of Bijpore, police-station Kanchrapara, and others, creditors.

ON the 12th day of January 1935 it was ordered that the matter of the petition of the applicant be heard on the 11th day of March 1935 and that the said applicant do attend to be examined by this Court on that date.

J. N. SEN, Sub-Judge.

Alipore, the 15th January 1935. (234—1)

In the 4th Court of the Sub-Judge of 24-Parganas.

INSOLVENCY CASE No. 10 OF 1935.

Kunja Bihari Kar of 8-A, Jadu Nath Mitra Lane, Maniktola, applicant.

To Adoita Lall Pyne of 1-1A, Bepin Mitra Lane, Shyambazar, Calcutta, and others, creditors.

ON the 14th day of January 1935 it was ordered that the matter of the petition of the applicant be heard on the 11th day of March 1935, and that the said applicant do attend to be examined by this Court on that date.

J. N. SEN, Sub-Judge.

Alipore, the 16th January 1935. (235—1)

In the 4th Court of the Sub-Judge of 24-Parganas.

INSOLVENCY CASE No. 13 OF 1935.

Purna Chandra Pramanik of Dakhineswar, police-station Barahanagar, applicant.

To Sajani Kanta Majhi of Ariadah, 24-Parganas, and others, creditors.

ON the 11th day of January 1935 it was ordered that the matter of the petition of the applicant be heard on the 11th day of March 1935, and that the said applicant do attend to be examined by this Court on that date.

J. N. SEN, Sub-Judge.

Alipore, the 12th January 1935. (236—1)

NOTICE TO CREDITORS OF APPLICATION FOR DISCHARGE.

Section 41 (*1*) of the Provincial Insolvency Act, V of 1920.

In the 4th Court of the Sub-Judge at Alipore.

INSOLVENCY CASE No. 344 OF 1933.

Hira Lal Mazumder of 5-1, Mayarpore Basti, police-station Alipore, applicant.

TAKE notice that the abovenamed insolvent has applied at the Court for his discharge, and that the Court has fixed the 25th day of February 1935, at 11 o'clock, for hearing the application.

Dated this 10th day of January 1935.

J. N. SEN, Sub-Judge.

(237—1)

NOTICE TO CREDITORS OF APPLICATION FOR DISCHARGE.

Section 41 (*1*) of the Provincial Insolvency Act, V of 1920.

In the 4th Court of the Sub-Judge at Alipore.

INSOLVENCY CASE No. 497 OF 1933.

Rajanikanta Sinha of 2, Rajendra Chowdhury Lane, Baranagar, 24-Parganas, applicant.

TAKE notice that the abovenamed insolvent has applied at the Court for his discharge, and that the Court has fixed the 11th day of March 1935 at 11 o'clock for hearing the application.

Dated this 18th day of January 1935.

J. N. SEN, Sub-Judge.

(258—1)

In the 4th Court of the Sub-Judge of 24-Parganas.

INSOLVENCY CASE No. 536 OF 1934.

Tarapada Mukherjee of 33, Debendra Ghose Road, Bhowanipore, applicant.

To Tapshiram of 61, Shambhu Nath Pandit's Street, Bhowanipore, and others, creditors.

ON the 16th day of January 1935 it was ordered that the matter of the petition of the applicant be heard on the 11th day of March 1935, and that the said applicant do attend to be examined by this Court on that date.

J. N. SEN, Sub-Judge.

Alipore, the 18th January 1935. (268—1)

In the 4th Court of the Sub-Judge of 24-Parganas.

INSOLVENCY CASE No. 540 OF 1934.

Sarat Chandra Dutta of 49, Sambhu Nath Pandit's Street, Bhowanipore, applicant.

To Ashutosh Mitter of 37, Sree Gopal Mallick Lane, Calcutta, and others, creditors.

ON the 17th day of January 1935 it was ordered that the matter of the petition of the applicant be heard on the 11th day of March 1935, and that the said applicant do attend to be examined by this Court on that date.

J. N. SEN, Sub-Judge.

Alipore, the 18th January 1935. (269—1)

ORDER OF ADJUDICATION.

Section 27 of the Provincial Insolvency Act, V of 1920.

In the 4th Court of the Sub-Judge at Alipore.

INSOLVENCY APPLICATION No. 354 OF 1934.

PURSUANT to a petition, dated 17th August 1934, filed by Ashutosh Ghose of Palpara, Baranagar, police-station Baranagar, 24-Parganas, and on the application of the debtor himself and on reading his application and hearing his pleador, it is ordered that the debtor be and the said debtor is hereby adjudged insolvent.

It is further ordered that the debtor do apply for his discharge within six months from this date.

Dated this 17th day of January 1935.

J. N. SEN, Sub-Judge.

(277—1)

ORDER OF ADJUDICATION.

Section 27 of the Provincial Insolvency Act, V of 1920.

In the 4th Court of the Sub-Judge at Alipore.

INSOLVENCY APPLICATION No. 371 OF 1934.

PURSUANT to a petition, dated 25th August 1934, filed by Frank Leeson Osborne of 51, Circular Garden Reach Road, Dock East, Port Commissioners' office, Khidderpore, and on the application of the debtor himself and on reading his application and hearing his pleader, it is ordered that the debtor be and the said debtor is hereby adjudged insolvent.

It is further ordered that the debtor do apply for his discharge within six months from this date.

Dated this 17th day of January 1935.

J. N. SEN, Sub-Judge.

(278—1)

In the 4th Court of the Sub-Judge of 24-Parganas.

INSOLVENCY CASE No. 5 OF 1935.

Yakoob Shaikh of Padirhati, police-station Garden Reach, applicant.

To Shaikh Bakul Khan Kabuli of Metiaburz, police-station Metiaburz, and others, creditors.

ON the 26th day of January 1935 it was ordered that the matter of the petition of the applicant be heard on the 3rd day of March 1935, and that the said applicant do attend to be examined by this Court on that date.

J. N. SEN, Sub-Judge.

Alipore, the 29th January 1935. (371—1)

MR. SAILENDRA NATH MITRA intends to be enrolled as an Advocate of the High Court, Calcutta.

(319—4)

MR. JALADHI NATH SADHU, B.L., intends to enrol as an Advocate of the Calcutta High Court.

(331—4)

MR. NIRANJAN SARKAR, M.A., B.L., intends to be enrolled as an Advocate of the Calcutta High Court.

(335—4)

MR. ABANI KANTA ROY, M.A., B.L., intends to be enrolled as an Advocate of the Calcutta High Court.

(336—4)

MR. SURJYA NARAYAN CHATTERJI, M.A., B.L., desires to be enrolled as an Advocate, Calcutta High Court.

(342—4)

MR. ATMARAM KHEMKA, M.A., B.L., desires to be enrolled as an Advocate of the Calcutta High Court.

(343—4)

MR. ANIL KUMAR MITTER, B.Sc., B.L., desires to be enrolled as an Advocate, Calcutta High Court.

(349—4)

MR. SAROJENDRA MOHAN ROY CHOWDHURY, M.A., B.L., desires to be enrolled as an Advocate of the Calcutta High Court.

(366—4)

MR. SHAIKH NABI BUKHSH, B.A., B.L., intends to practise as an Advocate, High Court, Calcutta.

(387—4)

MR. GURUPRASAD GHOSH intends to be enrolled as an Advocate of the High Court, Calcutta.

(388—4)

MR. BIBHOR KUMAR LAHIRI, B.L., intends to practise as an Advocate, High Court.

(389—4)

MR. KAMAKHYA DAS BANDYOPADHYAY, B. Sc., B.L., intends to be enrolled as an Advocate, High Court.

(390—4)

JNANENDRA NATH BAKSI, M.A, B.L., desires to be enrolled as an advocate of the High Court.

(391—4)

KAMAKHYAPADA CHAKRABORTY, M.A., B.L., desires to be enrolled as an Advocate of the High Court.

(392—4)

MR. JOTINDRA MOHON PAUL intends to practise as an Advocate, High Court, Calcutta.

(393—4)

MONOHAR CHATTERJEE intends to be enrolled as an Advocate of the Calcutta High Court.

(394—4)

MR. BINODEBIHARI HALDER, M.A., B.L., intends to be enrolled as an Advocate, Calcutta High Court.

(395—4)

DHIRENDRANATH MUKHOPADHYAY, B.L., intends to be enrolled as an Advocate.

(396—4)

JITENDRA KUMAR MITRA, M.A., B.L., wishes to be enrolled as an Advocate of the Calcutta High Court.

(398—4)

MR. ACHYUTACHARAN CHATTOPADHYAY, B.L., desires to be enrolled as an Advocate of the High Court, Calcutta. (402—4)

MR. NIKHIL CHANDRA GANGOPADHYAY, B.L., desires to be enrolled as an Advocate of the High Court, Calcutta. (403—4)

MR. SATYA BHUSAN DE, B.L., intends to practise as an Advocate, High Court. (404—4)

MR. KIRAN CHANDRA BOSE, B.L. intends to be enrolled as an Advocate of the High Court, Calcutta.

(413—4)

MR. JAGAT CHANDRA SARKAR, M.A., B.L., intends to be enrolled as an Advocate of the High Court, Calcutta.

(414—4)

AMIYA NATH DEY, B.L., intends to be admitted as an Advocate of the High Court, Calcutta. (418—4)

MR. PANKOJ NATH MUKHERJI, B.L., desires to be enrolled as an Advocate of the Calcutta High Court.

(432—4)

MR. GIRIJA KUMAR DAWN intends to be enrolled as an Advocate of the Calcutta High Court. (440—4)

MR. MANORANJAN SEN, M.Sc., B.L., intends to be enrolled as an Advocate of the High Court, Calcutta.

(428—4)

MR. BHUPENDRA NATH DAS GUPTA intends to be enrolled as an Advocate.

(450—4)

MR. PRITIBHUSHAN BARMAN, B.L., desires to be enrolled as an Advocate of the Calcutta High Court.

(451—4)

MR. KALIDAS DE CHOUDHURI, M.A., B.L., intends to be enrolled as an Advocate, High Court.

(539—4)

MR. A. B. M. FAZLE RABBI intends to be enrolled as an Advocate, Calcutta High Court.

(540—4)

WANTED a District Engineer for the District Board of Pabna on a graded pay of Rs. 250—10—300—20—400 (efficiency bar) 400—20—500. Candidates must be qualified under the rules for the appointment of District Engineers as per Bengal Government notifications No. 1781-L. S.-G., dated the 12th December 1912, and No. 809, dated the 18th February 1922, according to which in addition to being a qualified Engineer of either an Indian or British University the candidate must have held charge of important works for not less than five years.

Candidates should apply in sealed and registered covers addressed to the Chairman, District Board, Pabna, and superscribed "Application for appointment of District Engineer" accompanied by all the original certificates and testimonials of conduct and work from his immediate superiors under whom he served, required by the rules, together with a suitable envelope addressed and sufficiently stamped for registration for returning the original certificates in the event of the application being unsuccessful. Applicants must state their ages, experience of professional works and places of residences.

Applications will be received by the undersigned up to the 5th March 1935. Selected candidate will not be allowed any joining travelling allowance. Canvassing in any form will disqualify a candidate.

ABDUR RASCHID MAHMOOD,
Chairman, District Board.

Pabna, the 4th February 1935. (423—3)

Public Service Commission (India).

APPLICATIONS are invited for the post of Second Assistant Entomologist (Class II Service) on the staff of the Imperial Institute of Agricultural Research, Pusa. (2) Pay Rs. 200—215 during probationary period, thereafter Rs. 230—15—350—efficiency bar—20—650. If a provincial service officer drawing pay on the provincial service scale of Rs. 250—750 is appointed, he will come on the old scale of Rs. 250—800 on the stage next above his pay in the provincial scale *plus* Rs. 50. (3) Candidates should possess an M.Sc. degree in Zoology as the main subject, should have specialised in Entomology and should produce evidence of capability to conduct research work in the subject; or should have a wide knowledge of entomology, authorship of original papers of merit dealing with research in the subject and experience of work in an entomological laboratory. (4) Age between 23 and 30 years, if a person is not already in Government service. (5) Probation two years, which may be extended to three years. (6) Government servants eligible, if permitted to apply by their departments. (7) The appointing authority intends to appoint a Muslim, if one is on the list of "candidates most suitable for appointment" submitted by the Public Service Commission. (8) Last date for receipt of applications 11th March 1935. Prescribed application forms and further particulars may be obtained from the Secretary, Public Service Commission, Delhi. Applicants for forms must mention the name of the post.

Delhi, the 7th February 1935. (508—1)

THE Bengal and Madras Service Family Pension Fund which is provisionally managed and assisted by Government has for its object the provision of monthly pensions for the maintenance of the widows and children of subscribers and is open, with certain exceptions, to all active and pensioned members of the Uncovenanted service of Government (except those serving under the Government of Bombay), and to Local Fund servants earning pensions from Government. Some of the special features of the fund are (1) that widowed daughters incapable of re-marriage or children labouring under such mental or bodily infirmities as incapacitate them from earning their livelihood or preclude the possibility of marriage (in case of a daughter) are admitted to its benefits; and (2) that subscribers to the Widows and Daughters' branches are entitled to a refund of 30 per cent. of the premia paid, should the nominee predecease them after five years of admission. The second quinquennial valuation of the Fund has been completed by the Actuary to the Government of India, and his report discloses very favourable results. For forms of application and rules of the Fund apply to the Accountant-General, Bengal, Imperial Secretariat Buildings, Calcutta.

Road Cess Notification.

THE district board of Tippera at a special meeting held on the 7th February 1935 resolved to levy road cess in the district during the year 1935-36 at the rate of six pies in the rupee on the annual value of lands, etc.

A. R. CHOUDHURY, Chairman.

Comilla, the 11th February 1935. (454—1)

Road Cess Notification.

THE district board of Faridpur at their last special meeting held on the 31st January 1935 resolved to levy cess during the next financial year 1935-36 under section 46 of the Bengal Local Self-Government Act at the maximum rate of 6 pies in the rupee on the annual value of lands, etc.

A. CHOWDHRY, B.A., M.L.C. (Khan Bahadur),
Chairman, District Board.

Faridpur, the 6th February 1935. (456—1)

Road Cess Notification.

THE district board of Midnapore at its special meeting held on 26th January 1935, resolved that the maximum rate of two pice per rupee on the annual value of lands, etc., be fixed as the rate of road cess in this district for the year 1935-36.

S. C. DUTTA (Rai Bahadur, O.B.E.),
Vice-Chairman, District Board.

Midnapore, the 13th February 1935. (473—1)

Road Cess Notification.

THE district board of Pabna at their special meeting held on the 30th January 1935, resolved, under section 46 of the Bengal Local Self-Government Act, to levy road cess during the next year 1935-36, at the maximum rate of six pies in the rupee on the annual value of all lands, etc., in the district of Pabna.

ABDUR RASCHID MAHMOOD, Chairman.

Pabna, the 12th February 1935. (484—2)

Road Cess Notification.

THE district board of Pabna on reconsideration at their special meeting held on the 30th January 1935, resolved, under section 46 of the Bengal Local-Self-Government Act, to levy road cess during the year 1934-35, at the maximum rate of six pies in the rupee on the annual value of all lands, etc., in the district of Pabna.

ABDUR RASCHID MAHMOOD, Chairman.

Pabna, the 12th February 1935. (485—2)

Road Cess Notification.

IT is hereby notified for general information that under section 46 of the Act III (B.C.) of 1885, the district board of Bogra at a special meeting held on the 23rd January 1935 resolved that the road cess in the district for the year 1935-36 be levied at the reduced rate of 4½ pies per rupee on the annual value of lands, etc., subject to the sanction of Government.

H. R. CHOUDHURY, Chairman.

Bogra, the 30th January 1935. (510—1)

NOTICE is hereby given that all exhibits filed in cases disposed of in this Court during the year 1932 will be destroyed if not taken back before 31st March 1935 by the parties who filed them.

N. N. GUPTA, Municipal Magistrate, Calcutta.

Town Hall, Calcutta, the 9th January 1935.

NOTICE is hereby given that all exhibits filed in cases disposed of in this Court during the year 1932 will be destroyed if not taken back before 31st March 1935 by the parties who filed them.

A. MAJID, Municipal Magistrate, Calcutta.

Town Hall, Calcutta, the 9th January 1935.

Doveton Trust Fund.

IN pursuance of rule 9 of the rules for the application of the Doveton Trust Fund, the undersigned hereby declares that he will select scholars to the benefits of the above Fund at his office, 40-1A, Free School Street, Calcutta, on April 1st, 1935. No candidate shall be eligible for selection who is under fourteen (14) years of age or over eighteen (18) years on the 28th February 1935. Candidates must be the members of the Domiciled European or Anglo-Indian Community of Bengal. Preference shall be given first to those who are orphans and then to the distressed. Forms of application for scholarships under the Doveton Trust Fund, which are obtainable from the above office, are required to be duly filled in and submitted before the 15th March 1935.

R. WOLFENDEN,
Inspector of European Schools, Bengal, and
Administrator, Doveton Trust Fund.

Calcutta, the 13th February 1935.

Notice.

THE Buddhist Trading and Banking Association, Ltd., Cox's Bazar, have, by their special resolution on 30th January 1935 decided to amalgamate the Company with the Mohaluxmi Bank, Ltd., Chittagong, and for that purpose Babu Mohini Mohan Dutt and Mr. Phathaw of Cox's Bazar have been voluntarily appointed liquidators. All claims against the Company should, therefore, reach them in time.

MOHINI MOHAN DUTT, Managing Director.

Cox's Bazar, the 7th February 1935. (467—1)

Gilbert-Lodge and Company, Calcutta.

NOTICE is hereby given that the partnership heretofore subsisting between Edward Morton Gilbert-Lodge and Eric Wyndham-Crank carrying on business as Surveyors, Valuers, Assessors and Land Agents at Calcutta under the style or firm of Gilbert-Lodge and Company has been dissolved by mutual consent as from the Twenty-fifth day of January One thousand nine hundred and thirty-five so far as concerns the said Edward Morton Gilbert-Lodge who retires from the said firm.

All debts due to and owing by the said late firm will be received and paid respectively by the said Eric Wyndham-Crank who will continue to carry on the said business under a new name.

E. M. GILBERT-LODGE.

(440—1)

Estate James Murray, deceased.

PURSUANT to section 360 of Act XXXIX of 1925 and section 42 of Act XXVIII of 1866, the creditors and all persons interested in the estate of James Murray, late of No. 170, Prospecthill Road, Glasgow, Scotland, Colliery Manager, who died intestate at Glasgow, aforesaid, on the 29th day of October 1933, and Letters of Administration to whose estate were granted by the High Court, Calcutta, on the 28th day of August 1934, are hereby required to submit particulars of their claims to the undersigned on or before the 18th day of March 1935, after which date the Administrator will distribute the assets, having regard only to the claims of which notice shall then have been received.

ORR, DIGNAM & CO.,
Solicitors to the Administrator.

32, Dalhousie Square, South, Calcutta, 13th February 1935.

(458—1)

In the matter of the Indian Companies Act, VII of 1913, and
In the matter of the Delta Company and Sea Fisheries, Limited.

BY an order made by the High Court of Judicature at Fort William in Bengal in the above matter dated the 14th day of January 1935 on the petition of the Lightfoot Refrigeration Company, Limited, a creditor of the abovenamed Company, it was ordered that the abovenamed Company be wound up by the Court under the provisions of the Indian Companies Act, 1913, and that Clarence George Ashworth, Edwin John Carter and David Mitchell, partners in the firm of Messrs. Lovelock and Lewes, Chartered Accountants of No. 4, Lyons Range, Calcutta, be appointed official liquidators of the affairs of the Company with joint and several powers.

SANDERSON AND MORGANS,

Attorneys for the Official Liquidators.

26, Dalhousie Square, Calcutta, the 12th February 1935.

(453—1)

In the matter of the Indian Companies Act, VII of 1913, and
In the matter of the Republic Insurance Society (in liquidation).

NOTICE is hereby given that a meeting of the creditors of the above Society will be held on the 8th March 1935 at the liquidator's office at No. 12, Dalhousie Square East, Calcutta, at 3 p.m. in the afternoon.

Persons who have already submitted their claims are requested to attend the meeting with documentary proofs in original in support of their claims.

S. M. DASGUPTA, Liquidator.

(455—1)

In the matter of the Indian Companies Act, 1913, and

In the matter of Ashapur Tea Company, Limited (in voluntary liquidation).

NOTICE is hereby given, under section 217 of the Indian Companies Act, 1913, to all shareholders and creditors of the abovenamed Company, that a general meeting of the Company will be held on Friday, the 22nd March 1935, at 8-30 a.m., at the office of the liquidator at Jalpaiguri for acceptance of the account made by the liquidator under section 217(*1*) of the Indian Companies Act, 1913, and for receiving any explanation thereon and for dissolution and final winding up of the aforesaid Company.

CHARUCHANDRA SEN, Liquidator.

Jalpaiguri, the 13th February 1935. (474—1)

In the matter of the Provident Insurance Societies Act, 1912 (V of 1912), and

In the matter of Janahitaishi Insurance, Ltd.

WHEREAS I am of opinion as the result of an inquiry held by Mr. H. L. Humphreys, an Inspector appointed by me under sub-section (*1*) of section 17 of the Provident Insurance Societies Act, 1912 (V of 1912), that the Janahitaishi Insurance, Ltd., having its registered office at Comilla, is insolvent or must necessarily become so, and that the business of the said Janahitaishi Insurance, Ltd., is not conducted in accordance with its rules and that the registration of the said Janahitaishi Insurance, Ltd., ought to be cancelled :

Now, therefore, in exercise of the powers conferred by section 18 of the said Provident Insurance Societies Act, I hereby cancel the registration of the said Janahitaishi Insurance, Ltd.

And further, in exercise of the powers conferred by sub-section (*1*) of section 19 of the said Provident Insurance Societies Act, I hereby appoint Mr. B. K. Roy, B.Sc., G.D.A., R.A., of 8-2, Hastings Street, Calcutta, to be the liquidator to wind up the said Janahitaishi Insurance, Ltd., at a remuneration of 5 per cent. of the realisations of the dues to the Company subject to the minimum of Rs. 100 to be paid out of the assets of the Company.

N. K. MAJUMDER,

Registrar of Provident Insurance Societies, Bengal.

Calcutta, the 11th February 1935.

In the matter of the Provident Insurance Societies Act, 1912 (V of 1912), and

In the matter of Indo-Burma Benefit Society.

WHEREAS I am of opinion as the result of an inquiry held by Mr. H. L. Humphreys, an Inspector appointed by me under sub-section (*1*) of section 17 of the Provident Insurance Societies Act, 1912 (V of 1912), that the Indo-Burma Benefit Society, having its registered office at Comilla, is insolvent or must necessarily become so, and that the business of the said Indo-Burma Benefit Society is not conducted in accordance with its rules and that the registration of the said Indo-Burma Benefit Society ought to be cancelled :

Now, therefore, in exercise of the powers conferred by section 18 of the said Provident Insurance Societies Act, I hereby cancel the registration of the said Indo-Burma Benefit Society.

And further, in exercise of the powers conferred by sub-section (*1*) of section 19 of the said Provident Insurance Societies Act, I hereby appoint Mr. B. Mukherjee, G.D.A., R.A., of 17, Mangoe Lane, Calcutta, to be the liquidator to wind up the said Indo-Burma Benefit Society at a remuneration of 5 per cent. of the realisations of the dues to the Company subject to the minimum of Rs. 100 to be paid out of the assets of the Company.

N. K. MAJUMDER,

Registrar of Provident Insurance Societies, Bengal.

Calcutta, the 12th February 1935.

In the matter of the Provident Insurance Societies Act, 1912 (V of 1912), and

In the matter of Dacca Arya Insurance Society.

WHEREAS I am of opinion as the result of an inquiry held by Mr. H. L. Humphreys, an Inspector appointed by me under sub-section (*1*) of section 17 of the Provident Insurance Societies Act, 1912 (V of 1912), that the Dacca Arya Insurance Society, having its registered office at Comilla, is insolvent or must necessarily become so, and that the business of the said Dacca Arya Insurance Society is not conducted in accordance with its rules and that the registration of the said Dacca Arya Insurance Society ought to be cancelled :

Now, therefore, in exercise of the powers conferred by section 18 of the said Provident Insurance Societies Act, I hereby cancel the registration of the said Dacca Arya Insurance Society.

And further, in exercise of the powers conferred by sub-section (*1*) of section 19 of the said Provident Insurance Societies Act, I hereby appoint Mr. B. K. Roy, B.Sc., G.D.A., R.A., of 8-2, Hastings Street, Calcutta, to be the liquidator to wind up the said Dacca Arya Insurance Society at a remuneration of 5 per cent. of the realisations of the dues to the Society subject to the minimum of Rs. 100 to be paid out of the assets of the Society.

N. K. MAJUMDER,

Registrar of Provident Insurance Societies, Bengal.

Calcutta, the 11th February 1935.

In the matter of the Provident Insurance Societies Act, 1912 (V of 1912), and

In the matter of Paramount Insurance Company.

WHEREAS I am of opinion as the result of an inquiry held by Mr. H. L. Humphreys, an Inspector appointed by me under sub-section (*1*) of section 17 of the Provident Insurance Societies Act, 1912 (V of 1912), that the Paramount Insurance Company, having its registered office at Comilla, is insolvent or must necessarily become so, and that the business of the said Paramount Insurance Company is not conducted in accordance with its rules and that the registration of the said Paramount Insurance Company ought to be cancelled :

Now, therefore, in exercise of the powers conferred by section 18 of the said Provident Insurance Societies Act, I hereby cancel the registration of the said Paramount Insurance Company.

And further, in exercise of the powers conferred by sub-section (*1*) of section 19 of the said Provident Insurance Societies Act, I hereby appoint Mr. B. Mukherjee, G.D.A., R.A., of 17, Mangoe Lane, Calcutta, to be the liquidator to wind up the said Paramount Insurance Company at a remuneration of 5 per cent. of the realisations of the dues to the Company subject to the minimum of Rs. 100 to be paid out of the assets of the Company.

N. K. MAJUMDER,

Registrar of Provident Insurance Societies, Bengal.

Calcutta, the 12th February 1935.

In the matter of the Provident Insurance Societies Act, 1912 (V of 1912), and

In the matter of North East Insurance Co., Ltd.

WHEREAS I am of opinion as the result of an inquiry held by Mr. H. L. Humphreys, an Inspector appointed by me under sub-section (*1*) of section 17 of the Provident Insurance Societies Act, 1912 (V of 1912), that the North East Insurance Co., Ltd., having its registered office at Comilla, is insolvent or must necessarily become so, and that the business of the said North East Insurance Co., Ltd., is not conducted in accordance with its rules and that the registration of the said North East Insurance Co., Ltd., ought to be cancelled :

Now, therefore, in exercise of the powers conferred by section 18 of the said Provident Insurance Societies Act, I hereby cancel the registration of the said North East Insurance Co., Ltd.

And further, in exercise of the powers conferred by sub-section (*1*) of section 19 of the said Provident Insurance Societies Act, I hereby appoint Mr. P. N. Chowdhury, M.A., G.D.A., R.A., of 17, Kanai Dhar Lane, Calcutta, to be the liquidator to wind up the said North East Insurance Co., Ltd., at a remuneration of 5 per cent. of the realisations of the dues to the Company subject to the minimum of Rs. 100 to be paid out of the assets of the Company.

N. K. MAJUMDER,

Registrar of Provident Insurance Societies, Bengal.

Calcutta, the 13th February 1935.

In the matter of the Provident Insurance Societies Act, 1912 (V of 1912), and

In the matter of Islamia Mutual Insurance Society.

WHEREAS I am of opinion as the result of an inquiry held by Mr. H. L. Humphreys, an Inspector appointed by me under sub-section (*1*) of section 17 of the Provident Insurance Societies Act, 1912 (V of 1912), that the Islamia Mutual Insurance Society, having its registered office at Kanainagar, post-office Fatulla, Narayanganj, Dacca, is insolvent or must necessarily become so, and that the business of the said Islamia Mutual Insurance Society is not conducted in accordance with its rules and that the registration of the said Islamia Mutual Insurance Society ought to be cancelled :

Now, therefore, in exercise of the powers conferred by section 18 of the said Provident Insurance Societies Act, I hereby cancel the registration of the said Islamia Mutual Insurance Society :

And further, in exercise of the powers conferred by sub-section (*1*) of section 19 of the said Provident Insurance Societies Act, I hereby appoint Mr. P. N. Chowdhury, M.A., G.D.A., R.A., of 17, Kanai Dhar Lane, Calcutta, to be the liquidator to wind up the said Islamia Mutual Insurance Society at a remuneration of 5 per cent. of the realisations of the dues to the Company subject to the minimum of Rs. 100 to be paid out of the assets of the Company.

N. K. MAJUMDER,

Registrar of Provident Insurance Societies, Bengal.

Calcutta, the 13th February 1935.

In the matter of the Provident Insurance Societies Act, 1912 (V of 1912), and

In the matter of Dacca Mutual Insurance Society.

WHEREAS I am of opinion as the result of an inquiry held by Mr. H. L. Humphreys, an Inspector appointed by me under sub-section (*1*) of section 17 of the Provident Insurance Societies Act, 1912 (V of 1912), that the Dacca Mutual Insurance Society, having its registered office at Narayanganj, is insolvent or must necessarily become so, and that the business of the said Dacca Mutual Insurance Society is not conducted in accordance with its rules and that the registration of the said Dacca Mutual Insurance Society ought to be cancelled :

Now, therefore, in exercise of the powers conferred by section 18 of the said Provident Insurance Societies Act, I hereby cancel the registration of the said Dacca Mutual Insurance Society.

And further, in exercise of the powers conferred by sub-section (*1*) of section 19 of the said Provident Insurance Societies Act, I hereby appoint Mr. A. C. Roy, G.S.A.A., R.A., of 7, Rankin Street, Wari, Dacca, to be the liquidator to wind up the said Dacca Mutual Insurance Society at a remuneration of 5 per cent. of the realisations of the dues to the Company subject to the minimum of Rs. 100 to be paid out of the assets of the Company.

N. K. MAJUMDER,

Registrar of Provident Insurance Societies, Bengal.

Calcutta, the 13th February 1935.

In the matter of the Provident Insurance Societies Act, 1912 (V of 1912), and

In the matter of Chittaranjan Benevolent Society.

WHEREAS I am of opinion as the result of an inquiry held by Mr. H. L. Humphreys , an Inspector appointed by me under sub-section (*1*) of section 17 of the Provident Insurance Societies Act, 1912 (V of 1912), that the Chittaranjan Benevolent Society, having its registered office at Comilla, is insolvent or must necessarily become so, and that the business of the said Chittaranjan Benevolent Society is not conducted in accordance with its rules and that the registration of the said Chittaranjan Benevolent Society ought to be cancelled:

Now, therefore, in exercise of the powers conferred by section 18 of the said Provident Insurance Societies Act, I hereby cancel the registration of the said Chittaranjan Benevolent Society.

And further, in exercise of the powers conferred by sub-section (*1*) of section 19 of the said Provident Insurance Societies Act, I hereby appoint Mr. B. Mukherjee, G.D.A., R.A., of 17, Mangoe Lane, Calcutta, to be the liquidator to wind up the said Chittaranjan Benevolent Society at a remuneration of 5 per cent. of the realisations of the dues to the Company subject to the minimum of Rs. 100 to be paid out of the assets of the Company.

N. K. MAJUMDER,

Registrar of Provident Insurance Societies, Bengal.

Calcutta, the 15th February 1935.

Imperial Library.

(Secretariat Buildings, 6, Esplanade East, Calcutta) Open on—

Week days and Saturdays from 10 a.m. to 7 p.m. Sundays and Gazetted holidays from 2 p.m. to 5 p.m.

THE Imperial Library is also a Lending Library. It is free to all except children. There is no subscription to pay.

K. M. ASADULLAH, Librarian.

CINCHONA FACTORY PRODUCTS.

By order of the Government of Bengal Cinchona Factory Products as manufactured and packed at the Cinchona Factory, Mungpoo, Darjeeling district, will be sold and distributed by the Superintendent of the **Presidency Jail**, *in original packages* as received from the Mungpoo Factory, at the rates herein noted **from the 1st May 1926 :—**

Quinine Sulphate.

For 60 lbs. and upwards at a time .. Rs. 18 per lb.

For 6 lbs. and over but less than 60 lbs. at a time .. .. .. „ 19 „

For any quantity less than 6 lbs. .. „ 20 „

Totaquina.

Irrespective of quantity .. Rs. 13-8 per lb.

Quinine Hydrochloride.

For 60 lbs. and upwards at a time .. Rs. 23 per lb.

For 6 lbs. and over but less than 60 lbs. at a time .. .. .. „ 24 „

For any quantity less than 6 lbs. .. „ 25 „

Quinine Di-Hydrochloride.

For 60 lbs. and upwards at a time .. Rs. 25 per lb.

For 6 lbs. and over but less than 60 lbs. at a time .. .. .. „ 26 „

For any quantity less than 6 lbs. .. „ 27 „

Quinidine Sulphate.

For 60 lbs. and upwards at a time .. Rs. 20 per lb.

For 6 lbs. and over but less than 60 lbs. at a time .. .. .. „ 21 „

For any quantity less than 6 lbs. .. „ 22 „

Cinchonidine Sulphate.

For 60 lbs. and upwards at a time .. Rs. 25 per lb.

For 6 lbs. and over but less than 60 lbs. at a time .. .. .. „ 26 „

For any quantity less than 6 lbs. .. „ 27 „

Cinchonine Sulphate.

For 60 lbs. and upwards at a time .. Rs. 12 per lb.

For 6 lbs. and over but less than 60 lbs. at a time .. .. .. „ 13 „

For any quantity less than 6 lbs. .. „ 14 „

*Cinchona Febrifuge (Powder).

For 60 lbs. and upwards at a time .. Rs. 9 per lb.

For 6 lbs. and over but less than 60 lbs. at a time .. .. .. „ 9 „

For any quantity less than 6 lbs. .. „ 10 „

*Cinchona Febrifuge (Tablets).

For 60 lbs. and upwards at a time .. Rs. 10 per lb.

For 6 lbs. and over but less than 60 lbs. at a time .. .. .. „ 10 „

For any quantity less than 6 lbs. .. „ 11 „

Quinoidine (Tablets).

For 60 lbs. and upwards at a time .. Rs. 5 per lb.

For 6 lbs. and over but less than 60 lbs. at a time .. .. .. „ 5 „

For any quantity less than 6 lbs. .. „ 6 „

Quinoidine (in Mass).

For 60 lbs. and upwards at a time .. Rs. 4 per lb.

For 6 lbs. and over but less than 60 lbs. at a time .. .. .. „ 4 „

For any quantity less than 6 lbs. .. „ 5 „

Cinchona Bark (in 50 pound original bags).

Per bag .. .. .. Rs. 25.

Quinine Tablets per box of 200 tablets each.

Rs. 2-8 (Bengal), Rs. 3 (outside Bengal)

Rs. 15-8-0 per lb.

Transit charges extra in every case.

Cinchona Febrifuge** is for sale to Government and Charitable Institutions, Local Bodies and Missionaries only. **It is not for sale to Private Firms or the General Public.

Quinine Sulphate is now open for sale to the Public at the above rates. But it will be supplied to Hospitals and Dispensaries of this Presidency only at the wholesale rate of Rs. 18 per pound irrespective of quantities.

Five and ten boxes of Quinine Tablets are sold to the public at the concession rates which will be intimated on application.

Provinces other than Bengal, Bihar and Orissa and Assam will get their supplies of Sulph. Quinine from the Director, Botanical Survey of India, Sibpur, Howrah.

Local sale at the jail gate from 10 to 12 noon.

The system of payment is by—*Cash in advance*—by "*Treasury Challans*," which should accompany the order or indent.

In cases where this is not possible, payment should be made by "*Remittance Transfer Receipts*" or crossed "*Cheques.*"

Indents unaccompanied by cash in advance will be sent Value Payable Post. Credit sale is not allowed except under special circumstances.

In the case of *Government officers* payments will be recovered by *Book Transfer, i.e., Countersigned Invoices*, in the event of *Cash* not accompanying the indent by "*Treasury Challans*," *Remittance Transfer Receipt or Cheque.*

2. Price and postage must accompany the price of the drug (when the drug is required by post).

The name of the Railway and Steamer Station or Post Office must be written distinctly when the parcels are required by Rail, Steamer or by Post. Railway parcels are sent by passenger train only.

A scale of postage is given below.

	1 oz.	2 ozs.	4 ozs.	½ lb.	¾ lb.	1 lb.
	As.	As.	As.	As.	As.	Rs. A.
Quinine Sulph. ..	..	..	7	7	11	0 11
Cinchona Feb. ..	..	..	7	7	11	0 11
Cinchona Feb. Tablets	..	..	7	7	11	0 11
Quinoidine Tablets ..	..	..	..	..	..	1 13
Quinine Hydrochlor. ..	5	5	7	7	..	0 11
Quinine Di-hydrochlor.	5	5	7	7	..	0 11
Quinine Tablets ..	..	..	7	7	11	0 11

	1¼ lb.	2 lb.	3 lb.	4 lb.	5 lb.	6 lb.
	Rs. A.	Rs. A.	Rs. A.	Rs. A.	Rs. A.	Rs. A.
Quinine Sulph. ..	0 15	1 3	1 7	1 15	2 7	2 15
Cinchona Feb. ..	0 15	0 15	1 7	1 11	1 15	2 7
Cinchona Feb. Tablets	1 3	1 3	1 11	1 15	2 7	2 15
Quinoidine Tablets ..	..	2 3	3 3	..	..	..
Quinine Hydrochlor. ..	1 1	0 15	1 7	1 11	..	..
Quinine Di-hydrochlor.	1 1	0 15	1 13	2 5	..	..
Quinine Tablets ..	0 15	0 14	1 7	1 11	1 15	2 3

Two different drugs are not packed in the same parcel and postage must be paid separately for each kind.

N.B.—Postage stamps are not accepted as revenue.

Government reserve the right to alter the price without notice.

Registered No. C207

The Calcutta Gazette

THURSDAY, FEBRUARY 21, 1935.

PART III

Acts of the Bengal Legislative Council.

GOVERNMENT OF BENGAL.

Legislative Department.

NOTIFICATION.

No. 163L. — 15th February, 1935. — In pursuance of the provisions of sub-section (*3*) of section 81 of the Government of India Act, the following Act of the local legislature of Bengal, having been assented to by the Governor General on the 7th February, 1935, is hereby published for general information.

Bengal Act I of 1935.

THE BENGAL MUHAMMADAN MARRIAGES AND DIVORCES REGISTRATION (AMENDMENT) ACT, 1934.

[Published in the *Calcutta Gazette* of the 21st February, 1935.]

An Act further to amend the Bengal Muhammadan Marriages and Divorces Registration Act, 1876.

WHEREAS it is expedient to amend the Bengal Muhammadan Marriages and Divorces Registration Act, 1876, in the manner hereinafter appearing ; Ben. Act I of 1876.

It is hereby enacted as follows :—

Short title.

1. This Act may be called the Bengal Muhammadan Marriages and Divorces Registration (Amendment) Act, 1934.

Amendment of section 2 of Ben. Act I of 1876.

2. In section 2 of the Bengal Muhammadan Marriages and Divorces Registration Act, 1876 (hereinafter referred to as the said Act), for the figures "1871" in the two places where they occur, the figures "1908" shall be substituted.

Amendment of section 6.

3. In section 6 of the said Act,—

(*a*) in the paragraph relating to Book I, after the word "marriages" the words "including marriages of women who have effected divorces of the kind known as *Talaq-i-tafweez*" shall be inserted ;

(*b*) in the paragraph relating to Book II, after the word "*Khula*" the words "or *Talaq-i-tafweez*" shall be inserted ; and

(*c*) after the last paragraph relating to Book III the following paragraph shall be added, namely :—

"Book IV.—Register of divorces of the kind known as *Talaq-i-tafweez*" in the Form D contained in the Schedule to this Act."

Amendment of section 8.

4. In section 8 of the said Act,—

(*a*) after the words "*for the registration of a marriage*" the following words shall be inserted, namely :—

"*including the registration of a marriage of a woman who has effected a divorce of the kind known as Talaq-i-tafweez*" ;

(*b*) after the word "*Khula*" where it first occurs, the words "or *Talaq-i-tafweez*" shall be inserted ; and

(*c*) after the last paragraph ending with the words "by her duly authorized *vakil*" the following shall be inserted, namely :—

"*if the application be for the registration of a divorce of the kind known as Talaq-i-tafweez*—by the woman who has effected the divorce :

Provided that, if the woman be a *parda-nashin*, such application may be made on her behalf by her duly authorized *vakil*."

The Bengal Muhammadan Marriages and Divorces Registration (Amendment) Act, 1934.

(*Sections 5—8.*)

Insertion of new section 9A.

5. After section 9 of the said Act the following section shall be inserted, namely :—

Duties of Muhammadan Registrar in certain cases.

"9A. The Muhammadan Registrar shall not register—

(*a*) a marriage of a woman who has effected a divorce of the kind known as *Talaq-i-tafweez*—

(*i*) except on the production of a document registered under the Indian Registration Act, 1908, or under any other law for the time being in force for the registration of documents, or of a certified copy of such document, or of a certified copy of the order of the District Judge or any Court of competent jurisdiction, showing that such divorce has been effected or of an attested copy of an entry of the divorce in the register of divorces of the kind known as *Talaq-i-tafweez* (Book IV) ; XVI of 1908.

(*ii*) notwithstanding anything contained in section 9, within six months of the date of divorce of the previous husband of the woman ;

(*iii*) without giving to the previous husband of the woman by registered post one month's notice in such form containing such particulars as may be prescribed by rules made under section 24 ;

(*b*) a divorce of the kind known as *Talaq-i-tafweez* except on the production of a document registered under the Indian Registration Act, 1908, or under any law for the time being in force for the registration of documents, by which the husband delegated the power of divorce to the wife or of an attested copy of an entry in the register of marriages (Book I) showing that such delegation has been made."

Amendment of section 11.

6. In section 11 of the said Act,—

(*a*) after the word "*Khula*" where it first occurs, the words "or *Talaq-i-tafweez*" shall be inserted ;

(*b*) after the last paragraph ending with the words "by the Muhammadan Registrar" the following paragraph shall be inserted, namely :—

"*if the entry be of a divorce of the kind known as Talaq-i-tafweez in a register in the Form D contained in the Schedule to this Act,*—

(*1*) by the woman who has effected the divorce ;

(*2*) by the person who identifies the woman who has effected the divorce ;

(*3*) if the woman be of the *Shia* sect—by two witnesses to the divorce being effected ;

(*4*) by the Muhammadan Registrar."

Amendment of section 24.

7. In section 24 of the said Act, after clause (*aa*) the following clause shall be inserted, namely :—

"(*aaa*) for regulating the forms, contents and other particulars of notices under section 9A ;"

Amendment of the Schedule.

8. In the Schedule to the said Act,—

(*a*) in Form A, Book I,—

(*i*) in the heading after the words "*Register of Marriages*" the words "*including marriages of women who have effected divorces of the kind known as Talaq-i-tafweez*" shall be inserted ;

The Bengal Muhammadan Marriages and Divorces Registration (Amendment) Act, 1934.

(*Section 8.*)

(*ii*) in entry 4, after the word " husband " the following words shall be inserted, namely :—

"or has effected a divorce of the kind known as *Talaq-i-tafweez* " ;

(*iii*) after entry 4 the following entries shall be inserted, namely :—

"(*4a*) If the bride has effected a divorce of the kind known as *Talaq-i-tafweez*, particulars of the document produced to prove the same.

(*4b*) If the bride has effected a divorce of the kind known as *Talaq-i-tafweez*, the date on which and place where the same was registered, with name and residence of the previous husband."

(*iv*) after entry 16 the following entry shall be inserted, namely :—

" (*16a*) Whether the husband has delegated the power of divorce to the wife."

(*v*) all the entries in this Schedule as now amended commencing from (*4a*) shall be re-numbered consecutively ;

(*b*) in Form B, Book II, in the heading after the word " *Khula* " the words " *or Talaq-i-tafweez* " shall be inserted ; and

(*c*) after Form C, Book III, the following form shall be added, namely :—

" FORM D. BOOK IV.

Register of Divorces of the kind known as Talaq-i-tafweez (as prescribed by section 6 of the Act for the voluntary registration of Muhammadan Marriages and Divorces).

1. Consecutive number.

2. Name of the husband and that of his father, and their residences.

3. Name of the wife and that of her father, and their residences.

4. Name of the party identifying the wife before the Muhammadan Registrar, and that of his father, and their residences, with specification of the relationship which he bears to her, if any.

5. Particulars of documents produced to prove delegation of power to the wife to divorce the husband.

6. Date of *Talaq-i-tafweez*—according to the English style and according to the era current in the district.

7. Amount of dower.

8. Name of the village or town, police-jurisdiction and district where the *Talaq-i-tafweez* took place.

9. Name of the person in whose house the *Talaq-i-tafweez* took place, and that of his father.

10. Names of the witnesses, if any, to the divorce being effected, the names of their fathers and their residences.

11. Date of registration—to be given in the English style."

A. deC. WILLIAMS,
Secy. to the Govt. of Bengal.

Registered No. C207

The Calcutta Gazette

THURSDAY, FEBRUARY 21, 1935.

PART VI

Bills introduced in the Council of State and Legislative Assembly, Reports of Select Committees presented to the Council and Assembly, and Bills published under Rule 18 of the Indian Legislative Rules

GOVERNMENT OF INDIA.

Legislative Assembly Department.

The following Bill was introduced in the Legislative Assembly on the 22nd January, 1935:—

L. A. BILL No. 1 OF 1935.

A Bill further to amend the Indian Mines Act, 1923, for certain purposes.

WHEREAS it is expedient further to amend the Indian Mines Act, 1923, for the purposes hereinafter appearing; It is hereby enacted as follows:— IV of 1923.

Short title.

1. This Act may be called the Indian Mines (Amendment) Act, 1935.

Amendment of section 3, Act IV of 1923.

2. In section 3 of the Indian Mines Act, 1923 (hereinafter referred to as the said Act), IV of 1923.—

(*a*) for clause (*c*) the following clause shall be substituted, namely:—

"(*c*) 'child' means a person who has not completed his fifteenth year;";

(*b*) clause (*cc*) shall be re-lettered as clause (*ccc*) and before that clause as so re-lettered the following clause shall be inserted, namely:—

"(*cc*) 'day' means a period of twenty-four hours beginning at midnight;"; and

(*c*) after clause (*j*) the following clause shall be inserted, namely:—

"(*jj*) where work of the same kind is carried out by two or more sets of workers working during different periods of the day, each of such sets is called a 'relay';".

Amendment of section 10, Act IV of 1923.

3. For clause (*c*) of sub-section (*1*) of section 10 of the said Act the following clause shall be substituted, namely:—

"(*c*) three persons (none of whom shall be the Chief Inspector or an Inspector) nominated by the Local Government, of whom two shall be persons qualified to represent the interests of persons employed in mines, and chosen after consultation with the organisations, if any, representing persons employed in mines;".

Amendment of section 20, Act IV of 1923.

4. Section 20 of the said Act shall be re-numbered as sub-section (*1*) of section 20 and to that section as so re-numbered the following sub-section shall be added, namely:—

"(*2*) The Local Government may, by notification in the local official Gazette, direct that accidents other than those specified in sub-section (*1*) which cause bodily injury resulting in the enforced absence from work of the person injured for a period exceeding seven days shall be entered in a register in the prescribed form or shall be subject to the provisions of sub-section (*1*)."

Amendment of section 22, Act IV of 1923.

5. In section 22 of the said Act, for the word "or" the words "and shall cause every report submitted" shall be substituted.

Insertion of new sections 22A, 22B, 22C and 22D in Act IV of 1923.

6. In Chapter VI of the said Act, before section 23 the following sections shall be inserted, namely:—

Weekly day of rest.

"22A. No person shall be employed in a mine on more than six days in any one week.

Hours of employment above ground.

22B. (*1*) A person employed above ground in a mine shall not be allowed to work for more than fifty-four hours in any week or for more than ten hours in any day.

(*2*) The periods of work of any such person shall be so arranged that, along with any intervals for rest, they shall not in any day spread over more than eleven hours.

Hours of employment below ground.

22C. (*1*) The periods of work of a person employed below ground in a mine shall be reckoned from the time he leaves the surface to the time he returns to the surface and shall not in any day spread over more than nine hours.

(*2*) No such person shall be allowed to remain below ground except during his periods of work.

(*3*) Where work below ground is carried on by a system of relays, the periods of work of all persons employed in the same relay shall be the same and shall be reckoned from the time the first person of the relay leaves the surface to the time the last person of the relay returns to the surface.

Special provision for night relays.

22D. Where a worker works in a relay whose period of work extends over midnight, the ensuing day for him shall be deemed to be the period of twenty-four hours beginning at the end of the period of work fixed for the relay, and the hours he has worked after midnight shall be counted towards the previous day."

Substitution of new section for section 23, Act IV of 1923.

7. For section 23 of the said Act the following section shall be substituted, namely:—

Prohibition of employment of certain persons.

"23. No person shall employ or permit to be employed in a mine any person whom he knows or has reason to believe to have already been employed in any other mine during the preceding twelve hours."

Substitution of new section for section 23A, Act IV of 1923.

8. For section 23A of the said Act the following section shall be substituted, namely:—

Limitation of working hours above ground.

"23A. Work above ground shall not be carried on in any mine for a period exceeding eleven hours in any day except by a system of relays so arranged that not more than one relay of persons employed in work of the same kind shall be at work in the mine at the same time."

Amendment of section 23B, Act IV of 1923.

9. In section 23B of the said Act,—

(*a*) in sub-section (*1*),—

(*i*) for the word "shifts" the word "relays" and for the word "shift" the word "relay" shall be substituted, and

(*ii*) after the word "relay" as so substituted the following sentence shall be inserted, namely:—

"The notice shall also state the time of the commencement and of the end of any rest intervals fixed for persons employed above ground.";

(*b*) in sub-section (*3*), for the word "shift" the words "relay or in the rest intervals fixed for persons employed above ground" shall be substituted; and

(*c*) after sub-section (*3*) the following sub-section shall be inserted, namely:—

"(*4*) No person shall be employed in a mine otherwise than in accordance with the notice required by sub-section (*1*)."

Amendment of section 24, Act IV of 1923.

10. In section 24 of the said Act, for the words, figures and letter "section 23 or section 23A" the words, figures and letters "section 22A, section 22B, section 22C, section 23, section 23A or sub-section (*4*) of section 23B" shall be substituted.

Amendment of section 25, Act IV of 1923.

11. In section 25 of the said Act, for the words, figures and letter "section 23 or section 23A" the words, figures and letters "section 22A, section 22B, section 22C, section 23, section 23A, or sub-section (*4*) of section 23B" shall be substituted.

Amendment of section 28, Act IV of 1923.

12. Sub-section (*2*) of section 28 of the said Act shall be re-numbered as sub-section (*3*) and for sub-section (*1*) of that section the following sub-sections shall be substituted, namely:—

"(*1*) For every mine there shall be kept in the prescribed form and place a register of all persons employed in the mine showing, in respect of each such person,—

(*a*) the nature of his employment,

(*b*) the periods of work fixed for him,

(*c*) the rest intervals, if any, to which he is entitled,

(*d*) the days of rest to which he is entitled, and

(*e*) where work is carried on by a system of relays, the relay in which he works.

(*2*) For every mine to which the Local Government may, by general or special order, declare this sub-section to be applicable, there shall be kept in the prescribed form and place a register in which shall be entered for each day the time at which every person employed below ground in the mine leaves the surface and returns to the surface."

Amendment of section 30, Act IV of 1923.

13. In section 30 of the said Act,—

(*a*) after clause (*a*) the following clause shall be inserted, namely:—

"(*aa*) for prescribing the form of the register referred to in sub-section (*2*) of section 20;";

(*b*) in clause (*e*), for the words "to be more than thirteen years of age" the words "to have completed their fifteenth year" shall be substituted; and

(*c*) in clause (*f*), for the word "register" the word "registers" shall be substituted.

Amendment of section 31, Act IV of 1923.

14. In sub-section (*3*) of section 31 of the said Act, after the words "British India" the words "which is, in the opinion of the Governor General in Council, concerned with the subject dealt with by the regulation" shall be inserted.

Amendment of section 38, Act IV of 1923.

15. Section 38 of the said Act shall be re-numbered as sub-section (*1*) of section 38, and

(*a*) in the said section as so re-numbered, after the word "provisions" the words, brackets and figure "of sub-section (*1*)" shall be inserted; and

(*b*) to the said section as so re-numbered and amended the following sub-section shall be added, namely:—

"(*2*) Whoever in contravention of a direction made by the Local Government under sub-section (*2*) of section 20 fails to record in the prescribed register or to give notice of any accidental occurrence shall be punishable with fine which may extend to five hundred rupees."

Amendment of section 46, Act IV of 1923.

16. In sub-section (*1*) of section 46 of the said Act, after the word "exempt" the words "either absolutely or subject to any specified conditions" shall be inserted.

STATEMENT OF OBJECTS AND REASONS.

Following recommendations made by the Select Committee of the Legislative Assembly on the Indian Mines (Amendment) Bill of 1928 and by the Royal Commission on Labour, both Houses of the Legislature, in dealing with a Draft Convention relating to hours in coal mines, adopted in 1932 a resolution recommending the examination of the possibility of reducing the statutory limits of hours in mines. In pursuance of this resolution, the question has been examined by the Government of India in consultation with the Local Governments and the interests concerned; and they consider that it is desirable to reduce the statutory limits of hours in the manner proposed in the Bill.

2. The opportunity has been taken to include in the Bill certain other amendments to the Indian Mines Act. These amendments and the amendments dealing with hours are explained in the Notes on Clauses: the more important ones relate to points brought to notice by the Royal Commission on Labour.

F. NOYCE.

NEW DELHI;

The 16th January, 1935.

NOTES ON CLAUSES.

Clause 2 raises from 13 to 15 years the minimum age for employment in a mine. The Labour Commission recommended an age of 14, but the Government of India consider that the raising of the age to 15 is desirable in view of the fact that a full adult day can be worked by all who are not "children", and they believe that the change proposed would give rise to no serious difficulty.

A definition of the word "day" has become necessary in connection with the new hours of employment provisions in clause 6.

The word "shift" is at present used in the Mines Act to connote what is termed a "relay" in the Factories Act. The opportunity has been taken to substitute "relay" for "shift" where it occurs and to define "relay" in the terms used in the Factories Act.

Clause 3 is designed to make the representation of mine workers on Mining Boards equal to that of employers, and follows a recommendation of the Labour Commission.

Clause 4 is intended to provide for the maintenance of statistics of minor accidents the investigation of which might lead to an improvement in safety measures; it embodies, in a modified form, a recommendation of the Labour Commission.

Clause 5 is designed to make it obligatory for Local Governments to publish the reports of Courts of Inquiry, and represents a modification of a recommendation of the Labour Commission.

Clause 6:—

New section 22A.—This reproduces the provision in the existing section 23 (*1*) (*a*).

New sections 22B and 22C.—The present and proposed limits of hours are as follows:—

	Present limits.	Proposed limits.
(*a*) Above ground	60 weekly	54 weekly.
	12 daily	10 daily.
(*b*) Below ground	54 weekly.	
	12 daily	9 daily.

As the new section 22C also provides that the hours of work below ground shall be reckoned from the time the first worker of a relay leaves the surface to the time the last worker of the same relay returns to the surface, the average working time below ground will be substantially less than nine hours.

A spreadover of 11 hours for workers above ground has been provided in order to permit of the grant of adequate rest intervals.

New section 22D.—This is required to meet difficulties arising out of the working of relays and is based on section 46 of the Factories Act.

Clause 7.—This reproduces sub-section (*2*) of existing section 23.

Clause 8 removes the present restriction on the simultaneous presence underground of two relays of workers so as to enable one relay to go out as another is coming in. The proposed section 22C provides a sufficient safeguard against the danger of abuse arising through overlapping relays underground.

Clause 9 is intended to provide for the exhibition in the notice referred to in existing section 23B of the rest intervals granted to workers above ground, and to make it clear that persons can only be employed within the hours indicated by the notice.

Clauses 10 and 11 contain consequential amendments.

Clause 12 adds to the existing section 28 the requirement that particulars of rest intervals should be entered in the register, and provides for a record of persons underground, where this is necessary in the interests of safety.

Clause 13 contains consequential amendments.

Clause 14 is designed to eliminate the necessity of referring drafts of regulations to those Mining Boards which may not be concerned with the subject matter of the regulations.

Clause 15 is consequential on clause 4.

Clause 16 empowers the Governor General in Council to attach conditions to exemptions from the provisions of the Act, where necessary. At present exemptions, when granted, must be unconditional.

MD. RAFI,
Secy. to the Govt. of India.

Registered No. C207

No. 8 of 1935

The Calcutta Gazette

THURSDAY, FEBRUARY 21, 1935.

CONTENTS:

	Page.		Page.
Statement under the Cotton Ginning and Pressing Factories Act, 1925 ..	279	Corporation of Calcutta Notices ..	291
Return of Vital Statistics for the month of August 1934	280—285	Statement showing water-levels of certain rivers in Bengal for the month of December 1934	292—293
Monthly Weather and Crop Report of Bengal for January 1935	286	Statements of weekly gauge readings on certain rivers in Bengal	294—295
Weather and Crop Report for the week ending 13th February 1935	287—290	Vital Statistics of towns of Bengal for the week ending 9th February 1935 ..	296

SUPPLEMENT.

Official Papers.

FORM C—BENGAL.

STATEMENT OF COTTON PRESSED IN THE BENGAL PRESIDENCY FOR THE WEEK ENDING THE 8th FEBRUARY 1935.

[Section 5(2) of the Cotton Ginning and Pressing Factories Act, 1925.]

Name of Division or block.	Number of bales pressed.				District included in the block.
	During the week.	During the corresponding week last year.	Since 1st September 1934 (the date prescribed by the Local Government as the commencement of the season).	During the corresponding period last year.	
The Bengal Presidency	754 or 749·18 bales of 400 lbs. each.	998	4,977	6,667	All districts in the Presidency.

J. B. McBride,

Chief Inspector of Factories, Bengal.

Vital Statistics for the month of August 1934 of the

Districts.	No.	Towns.	Population under registration according to census of 1931.			Births registered.		Deaths							
			Male.	Female.	Total.	Number registered (excluding still-births).	Still-born number registered.	Cholera.	Small-pox.	Plague.	Malaria.	Enteric fever.	Measles.	Relapsing fever.	Kala-azar.
Burdwan ..	1	Burdwan	23,485	16,133	39,618	40	..	4	..	..	2	4	..	..	1
	2	Raniganj	9,162	7,211	16,373	29	2	..	..	..	4	..	..	..	..
	3	Asansol ..	18,710	12,576	31,286	36	2	1	..	..	1	5	..	..	..
Birbhum ..	4	Suri ..	6,089	4,819	10,908	16	1	3	..	..	1	..	..	..	..
Bankura ..	5	Bankura	17,280	14,423	31,703	30	..	26	..	..	2	1	..	..	..
	6	Vishnupur	9,767	9,929	19,696	14	..	22	..	..	2	..	..	..	..
	7	Sonamukhi	5,337	5,652	10,989	9	..	..	..	..	..	..	..	..	..
Midnapur ..	8	Midnapur	17,807	14,214	32,021	35	..	..	..	..	1	..		..	..
	9	Ghatal ..	6,422	5,978	12,400	16	1	4	..	..	..	..	..	..	..
Hooghly ..	10	Hooghly-Chinsura.	18,799	13,835	32,634	75	1	..	..	..	2	6	..	..	..
	11	Bansberia	9,797	4,424	14,221	12	..	1	..	..	5	..	..	..	..
	12	Serampur	23,985	15,071	39,056	60	..	1	2	..	..	..	..	..	..
	13	Rishra-Konnagar.	17,628	9,340	26,368	34	..	..	..	..	..	2	..	..	..
	14	Baidyabati	10,369	8,117	18,486	32	..	..	..	..	1	1	..	..	..
	15	Bhadreswar	14,938	8,054	22,992	13	..	..	..	..	..	..	..	..	..
	16	Champdani	17,497	7,868	25,365	26	1	..	..	..	..	2	1	..	..
Howrah ..	17	Howrah ..	145,120	79,753	224,873	503	41	10	2	..	2	21	..	..	1
	18	Bally ..	20,044	9,403	30,347	33	1	1	..	..	1	..	..	..	..
24-Parganas ..	19	South Suburban.	22,183	17,316	39,499	53	..	..	..	..	10	1	..	..	..
	20	Tollyganj	14,800	9,676	24,476	32	..	1	..	..	..	..	..	..	..
	21	Budge-Budge.	15,514	8,669	24,183	20	..	..	..	..	..	1	..	..	..
	22	Baranagar	23,116	13,934	37,050	68	6	1	3	..	3	2	..	..	..
	23	Kamarhati	20,107	10,247	30,354	39	..	1	..	..	..	..	..	..	..
	24	Rajpur ..	5,788	5,645	11,433	20	..	..	..	..	..	..	..	..	..
	25	South Dum-Dum.	11,983	6,488	18,471	23	1	..	..	..	..	..	—	..	..
	26	Barrackpur	16,320	9,075	25,395	11	..	..	..	..	1	..	..	..	..
	27	Panihati	6,738	4,961	11,699	14	..	..	..	..	..	1	..	..	..
	28	North Barrackpur.	9,751	6,507	16,258	35	1	..	..	..	1	1	..	..	..
	29	Titagarh	34,252	15,332	49,584	57	2	..	..	..	..	..	..	..	..
	30	Garulia ..	9,282	4,751	14,033	13	..	1	..	..	..	..	..	..	..
	31	Naihati ..	20,123	10,785	30,908	26	1	2	..	..	1	..	..	..	..
	32	Halisahar	12,188	4,582	16,770	6	..	..	5	..	..	..	..	..	..
	33	Kanchrapara.	10,113	4,892	15,005	33	..	..	..	..	..	..	..	..	..
	34	Bhatpara	60,134	24,841	84,975	124	2	1	1	..	1	..	..	..	..
	35	Basirhat ..	11,106	10,181	21,287	28	..	..	..	..	3	1	..	..	..
	36	Baduria ..	7,169	6,508	13,677	13	..	..	..	..	..	..	..	..	1
Calcutta ..	37	Calcutta ..	814,948	381,786	1,196,734	1,904	183	48	7	..	59	112	4	..	14
Nadia ..	38	Krishnagar	12,807	11,477	24,284	19	..	..	1	..	..	..	..	..	..
	39	Nabadwip	8,912	9,949	18,861	27	8	..	..	..	2	1	..	..	2
	40	Ranaghat	6,334	5,061	11,395	18	..	..	..	..	3	..	..	..	..
	41	Santipur	12,016	12,976	24,992	40	1	1	..	..	..	1	1	..	..

towns with a population of 10,000 and over in Bengal.

registered.

Other fevers.	Dysentery.	Diarrhœa.	Influenza.	Pneumonia.	Phthisis.	Other respiratory diseases.	Injuries including suicide.	Deaths from child-birth.	Other causes.	Total of all causes.			Total of corresponding month of previous year.			No.	Towns.
										Male.	Female.	Total.	Male.	Female.	Total.		
..	7	8	..	2	2	..	1	1	9	23	18	41	29	17	46	1	Burdwan.
4	9	2	..	2	..	2	..	..	22	17	28	45	18	18	36	2	Raniganj.
14	6	..	..	3	2	2	2	2	36	38	36	74	17	15	32	3	Asansol.
8	..	..	..	2	2	3	4	..	3	15	11	26	5	4	9	4	Suri.
20	5	11	..	2	..	3	3	..	15	56	32	88	21	10	31	5	Bankura.
10	1	7	..	3	..	6	..	..	13	37	27	64	15	10	25	6	Vishnupur.
2	1	6	..	4	1	1	1	..	5	9	12	21	8	8	16	7	Sonamukhi.
5	8	7	..	9	4	..	..	..	24	29	29	58	16	12	28	8	Midnapur.
6	1	8	..	4	..	1	..	..	3	12	15	27	11	9	20	9	Ghatal.
8	3	7	..	4	3	2	3	1	31	46	24	70	36	27	63	10	Hooghly-Chinsura.
..	1	..	..	1	..	1	1	..	1	7	4	11	1	7	8	11	Bafisberia.
5	5	2	..	4	3	2	2	..	11	21	16	37	16	16	32	12	Serampur.
2	2	..	..	2	2	2	1	..	10	14	9	23	11	7	18	13	Rishra-Konnagar.
..	3	2	..	2	1	..	1	..	10	11	10	21	8	16	24	14	Baidyabati.
13	1	3	..	2	..	..	..	..	10	19	10	29	10	9	19	15	Bhadreswar
5	3	4	..	3	..	..	..	1	17	19	17	36	8	11	19	16	Champdani.
2	81	50	..	45	24	96	6	8	210	277	281	558	251	193	444	17	Howrah.
3	1	2	..	4	1	1	2	..	4	11	9	20	11	7	18	18	Bally.
6	13	7	1	4	4	1	3	..	31	49	32	81	23	11	34	19	South Suburban.
2	..	4	..	8	1	..	..	..	..	9	7	16	6	5	11	20	Tollyganj.
10	13	1	..	1	2	3	2	..	7	25	15	40	24	10	34	21	Budge-Budge.
6	21	4	2	3	5	4	..	..	25	40	39	79	28	27	55	22	Baranagar.
9	8	2	..	3	1	2	2	1	11	28	12	40	21	14	35	23	Kamarhati.
5	1	1	..	2	..	1	1	..	4	8	7	15	10	7	17	24	Rajpur.
..	1	1	..	..	..	4	1	..	2	3	6	9	11	17	28	25	South Dum-Dum.
5	..	3	..	1	..	3	..	..	5	10	8	18	6	3	9	26	Barrackpur.
1	..	3	..	1	..	2	..	1	11	10	10	20	11	9	20	27	Panihati.
..	3	2	..	..	..	1	1	1	6	8	8	16	9	4	13	28	North Barrackpur.
38	3	1	..	1	1	..	..	..	4	28	20	48	27	25	52	29	Titagarh.
1	..	..	..	..	..	..	..	..	1	3	..	3	2	2	4	30	Garulia.
14	2	2	..	2	2	1	1	1	14	24	18	42	11	7	18	31	Naihati.
..	..	..	..	1	..	..	..	..	3	3	6	9	1	4	5	32	Halisahar.
12	..	1	..	..	..	..	..	..	3	9	7	16	8	4	12	33	Kanchrapara.
52	7	3	..	9	1	2	1	1	28	60	47	107	29	23	52	34	Bhatpara.
2	4	..	..	6	1	..	..	..	6	15	8	23	13	17	30	35	Basirhat.
4	1	..	..	4	1	..	3	..	..	5	9	14	5	6	11	36	Baduria.
173	193	143	57	220	190	385	56	12	1,109	1,548	1,234	2,782	1,285	957	2,222	37	Calcutta.
3	5	..	..	2	..	..	..	..	3	7	7	14	9	4	13	38	Krishnagar.
16	8	1	..	7	1	2	3	..	19	28	34	62	31	30	61	39	Nabadwip.
..	..	1	..	2	..	..	..	..	..	4	2	6	3	4	7	40	Ranaghat.
10	..	1	..	3	..	4	3	..	18	22	20	42	23	15	38	41	Santipur.

Vital Statistics for the month of August 1934 of the

Districts.	No.	Towns.	Population under registration according to census of 1931.			Births registered.		Deaths							
			Male.	Female.	Total.	Number registered (excluding stillbirths).	Stillborn number registered.	Cholera.	Small-pox.	Plague.	Malaria.	Enteric fever.	Measles.	Relapsing fever.	Kala-azar.
Murshidabad	42	Berhampur	15,166	12,237	27,403	34	1	..	..	..	1	3	..	..	3
	43	Jiaganj-Azimganj	5,774	5,224	10,998	8	..	..	..	..	1	1	..	..	..
	44	Kandi ..	6,403	6,213	12,616	18	..	..	..	..	1	..	..	..	..
	45	Jangipur	6,283	6,513	12,796	12	..	..	..	..	..	..	..	..	..
Jessore ..	46	Jessore ..	7,084	4,272	11,356	13	..	1	..	..	2	..	..	..	1
Khulna ..	47	Khulna ..	11,968	7,152	19,120	5	..	..	..	..	4	2	..	..	..
	48	Satkhira ..	6,071	5,170	11,241	32	..	.	..	..	2	..	..	..	..
Rajshahi ..	49	Rajshahi	15,178	11,886	27,064	56	1	..	..	..	2	1	..	..	2
Dinajpur ..	50	Dinajpur	11,763	7,393	19,156	11	..	..	..	..	..	..	..	..	..
Jalpaiguri ..	51	Jalpaiguri	11,995	6,967	18,962	38	1	..	..	..	1	..	..	..	..
Darjeeling..	52	Darjeeling	12,101	9,084	21,185	83	..	..	..	..	..	4	..	..	1
Rangpur ..	53	Rangpur	12,808	7,941	20,749	36	1	..	..	..	1	5	..	..	1
Bogra ..	54	Bogra ..	8,678	6,141	14,819	9	..	..	..	..	..	1	..	..	..
Pabna ..	55	Pabna ..	11,970	9,934	21,904	16	..	..	..	..	1	..	..	..	..
	56	Sirajganj	17,981	14,486	32,467	48	..	1	..	..	11	..	..	..	..
Malda ..	57	English Bazar.	9,387	7,520	16,907	28	..	..	..	..	1	1	..	..	1
	58	Nawabganj	7,497	8,329	15,826	29	..	..	..	..	..	..	..	..	1
Dacca ..	59	Dacca ..	79,365	59,153	138,518	339	25	1	..	..	1	2	..	..	10
	60	Narayanganj	21,526	12,663	34,189	68	4	..	..	..	..	..	..	..	..
Mymensingh	61	Mymensingh	19,733	10,747	30,480	55	4	..	..	..	..	1	..	..	..
	62	Netrakona	6,848	4,132	10,980	25	2	..	..	..	..	..	..	..	..
	63	Jamalpur	12,629	10,448	23,077	41	..	..	..	..	..	..	..	..	2
	64	Sherpur ..	10,545	9,002	19,547	35	1	1	..	..	4	1	..	..	1
	65	Kishorganj	8,624	6,813	15,437	35	..	..	..	..	..	..	..	..	..
	66	Bajitpur ..	5,632	6,018	11,650	5	..	..	..	..	3	..	..	..	1
	67	Tangail ..	8,739	7,343	16,082	9	1	..	..	..	..	..	..	..	..
Faridpur ..	68	Faridpur	9,427	6,089	15,516	6	..	..	..	..	17	..	..	..	..
	69	Madaripur	15,204	11,690	26,894	14	..	..	..	..	..	..	..	..	..
Bakarganj ..	70	Barisal ..	23,588	12,128	35,716	37	..	1	..	..	..	..	..	..	..
	71	Pirojpur ..	6,062	4,897	10,959	10	..	..	..	..	..	..	..	.	..
Chittagong	72	Chittagong	35,049	18,107	53,156	71	7	..	..	..	1	..	..	.	1
Noakhali ..	73	Noakhali	7,808	5,255	13,063	12	..	..	..	..	..	..	..	..	..
Tippera ..	74	Comilla ..	18,530	12,835	31,365	30	..	..	..	..	..	..	..	..	..
	75	Brahmanbaria.	13,973	12,689	26,662	34	1	..	..	..	..	..	..	..	..
	76	Chandpur	11,443	5,395	16,838	4	..	1	..	..	..	..	..	..	..
		Total of month.	2,051,552	1,194,305	3,245,857	4,942	304	135	21	..	102	185	6	..	44
		Total of corresponding month of previous year ..	..	..	..	5,442	339	33	26	..	177	186	8	4	54
		Increase + or decrease—	..	..	..	−500	−35	+102	−5	..	−15	−1	−2	−4	−10

Remarks.—1. The above table is compiled from returns collected by the municipalities and submitted to the Director of Public Health by the approximate to the actual in a proportion of cases and in a few instances are obviously incomplete.

2. The vital statistics of municipalities with a population of less than 10,000 have been excluded from this statement and 1918.

3. The birth and death ratios per mille per annum have been omitted from this statement according to Government of India

Calcutta, the 14th February 1935.

towns with a population of 10,000 and over in Bengal.

registered.

Other fevers.	Dysentery.	Diarrhœa.	Influenza.	Pneumonia.	Phthisis.	Other respiratory diseases.	Injuries including suicide.	Deaths from child-birth.	Other causes.	Total of all causes.			Total of corresponding month of previous year.			No.	Towns.
										Male.	Female.	Total.	Male.	Female.	Total.		
15	4	..	..	..	1	2	1	1	7	17	21	38	27	22	49	42	Berhampur.
8	..	..	..	..	1	..	..	..	3	6	8	14	7	7	14	43	Jiaganj-Azimganj.
7	..	..	..	..	..	1	1	..	4	8	6	14	4	12	16	44	Kandi.
5	..	1	..	..	..	..	..	..	..	4	2	6	5	2	7	45	Jangipur.
..	1	..	..	1	..	3	1	..	6	14	2	16	4	6	10	46	Jessore.
6	..	..	..	1	1	1	1	..	3	9	10	19	15	12	27	47	Khulna.
2	..	..	..	6	..	..	..	1	7	9	9	18	9	8	17	48	Satkhira.
7	6	..	..	6	3	1	6	..	21	29	26	55	29	13	42	49	Rajshahi
3	1	..	..	..	..	..	..	..	2	1	5	6	13	6	19	50	Dinajpur.
..	1	..	..	..	..	2	..	..	4	7	1	8	22	9	31	51	Jalpaiguri.
19	2	2	..	3	9	..	1	1	7	28	21	49	23	24	47	52	Darjeeling.
10	2	1	..	2	1	1	..	2	9	24	11	35	12	11	23	53	Rangpur.
8	1	..	..	2	..	..	..	..	1	7	6	13	12	8	20	54	Bogra.
2	2	1	..	1	..	1	1	..	3	11	1	12	9	4	13	55	Pabna.
4	1	4	..	2	..	1	7	1	11	20	23	43	4	2	6	56	Sirajganj.
..	1	..	..	1	..	..	..	..	6	10	1	11	13	7	20	57	English Bazar.
13	1	1	..	2	..	..	2	..	9	16	13	29	11	15	26	58	Nawabganj.
1	9	8	1	45	8	43	12	5	97	140	103	243	120	94	214	59	Dacca.
15	4	..	..	2	2	2	5	1	18	31	18	40	28	25	53	60	Narayanganj.
16	1	..	..	..	..	1	7	1	9	21	15	36	11	13	24	61	Mymensingh
2	..	..	..	..	..	2	1	..	2	5	2	7	5	4	9	62	Netrakona.
14	1	..	..	1	..	..	4	..	7	19	10	29	9	13	22	63	Jamalpur.
10	1	1	..	3	2	5	1	..	8	21	17	38	20	29	49	64	Sherpur.
3	..	..	..	..	..	..	..	..	8	6	5	11	1	2	3	65	Kishorganj.
2	..	..	..	..	..	..	..	..	1	4	3	7	4	4	8	66	Bajitpur.
6	..	..	..	1	1	..	..	..	3	5	6	11	16	9	25	67	Tangail.
..	..	..	..	..	2	..	..	1	1	11	10	21	2	3	5	68	Faridpur
8	4	..	..	2	..	..	..	..	3	11	6	17	8	7	15	69	Madaripur.
22	3	..	..	1	..	1	2	..	11	15	26	41	13	19	32	70	Barisal.
6	3	..	..	..	..	..	1	..	9	11	8	19	8	3	11	71	Pirojpur.
13	5	..	..	1	1	..	2	..	16	24	16	40	26	19	45	72	Chittagong.
1	1	..	..	..	..	..	..	..	3	3	2	5	11	2	13	73	Noakhali.
3	3	1	..	1	..	..	2	..	5	5	10	15	6	7	13	74	Comilla.
11	..	1	..	1	..	1	..	..	14	15	13	28	16	11	27	75	Brahmanbaria.
1	3	..	..	2	..	..	..	..	2	6	3	9	7	1	8	76	Chandpur.
719	482	321	61	465	287	605	162	44	2,064	3,180	2,583	5,763	..	..	..		
657	807	175	98	465	294	431	107	30	1,640	2,598	2,034	4,632	..	..	..		
+62	+175	+146	−37	+60	−7	+174	+55	+14	+424	+582	+549	+1,131	..	..	..		

District Health Officers. Taken as a whole, the statement possesses a relative value, although the figures for individual town probably only incorporated in the returns for districts as ordered in Government of Bengal, Municipal Department letter No. 118 San., dated the 8th February Education Department letter No. 93, dated the 26th March 1918.

R. B. KHAMBATA, M.R.C.S. (ENG.), L.R.C.P. (LOND.), D.P.H. (CAMB.), *Director of Public Health, Bengal.*

Vital Statistics for the month of August 1934 of the districts

Division.	No.	Districts.	Population under registration according to census of 1931.			Births registered.		Deaths							
			Male.	Female.	Total.	Number registered (excluding still-births).	Still-born number registered.	Cholera.	Small-pox.	Plague.	Malaria.	Enteric fever.	Measles.	Relapsing fever.	Kala-azar.
Burdwan	1	Burdwan	763,534	724,888	1,488,422	2,543	51	76	6	..	933	19	6	6	7
	2	Birbhum	466,598	470,048	936,646	1,661	61	52	3	..	971	16	7	..	2
	3	Bankura	524,690	524,643	1,049,333	2,248	16	120	1	..	756	9	10	3	8
	4	Midnapur	1,392,796	1,361,876	2,754,672	4,738	82	255	30	..	1,229	34	17	..	3
	5	Hooghly	479,217	455,416	934,633	1,588	4	180	34	..	609	77	1	..	7
	6	Howrah ..	433,011	410,636	843,647	1,333	4	111	10	..	97	18	3	7	4
Presidency	7	24-Parganas	1,154,286	1,074,531	2,228,817	4,257	39	215	23	..	245	14	..	..	43
	8	Nadia ..	720,894	678,608	1,399,502	3,066	65	5	2	..	1,478	6	9	..	20
	9	Murshida-bad.	649,857	657,007	1,306,864	2,780	101	11	3	..	1,341	7	11	1	20
	10	Jessore	864,362	795,446	1,659,808	2,417	59	11	..	..	1,413	4	..		31
	11	Khulna ..	833,612	762,175	1,595,787	2,784	138	114	1	..	797	66	..	..	70
Rajshahi	12	Rajshahi	726,117	675,837	1,401,954	2,298	76	3	2	..	1,892	29	5	1	25
	13	Dinajpur	912,329	823,947	1,736,276	3,579	37	16	17	..	1,786	23	11	2	150
	14	Jalpaiguri	521,824	442,571	964,395	2,792	61	..	1	..	778	9	11	2	6
	15	Darjeeling	158,030	140,420	298,450	984	58	..	..	..	205	..	..	..	5
	16	Rangpur	1,343,786	1,230,250	2,574,036	4,069	257	..	43	..	3,316	48	26	2	82
	17	Bogra ..	548,496	523,104	1,071,600	1,603	106	..	27	..	1,811	6	3	5	27
	18	Pabna .	709,076	682,207	1,391,283	2,230	94	2	42	..	1,229	25	3	1	5
	19	Malda ..	510,421	510,612	1,021,033	1,942	5	7	..	..	1,250	10	..	..	26
Dacca ..	20	Dacca ..	1,642,626	1,617,244	3,259,870	5,181	110	26	19	..	1,012	30	13	..	114
	21	Mymensingh	2,594,444	2,408,565	5,003,009	7,598	411	14	23	..	2,406	15	12	182	48
	22	Faridpur	1,181,717	1,138,088	2,319,805	3,613	162	42	1	..	1,575	18	5	6	40
	23	Bakarganj	1,475,688	1,416,687	2,892,375	3,413	45	106	..	..	325	16	14	5	75
Chittagong	24	Chittagong	837,839	906,043	1,743,882	3,232	178	121	..	..	309	44	3	20	27
	25	Noakhali	851,010	842,646	1,693,656	2,717	185	82	7	..	300	12	3	7	90
	26	Tippera ..	1,551,694	1,483,176	3,034,870	3,654	257	21	1	..	683	30	12	2	119
	27	Chittagong Hill Tracts.													Not
		Total of month for Bengal.	23,875,876	22,779,347	46,655,223	78,320	2,662	1,540	296	..	28,746	585	185	253	1,054
		Total of corresponding month of previous year.	..	..	..	79,708	2,720	340	515	..	32,214	659	269	356	836
		Increase+ or decrease−.	..	..	..	−1,388	−58	+1,200	−219	..	−3,468	−74	−84	−103	+218

Remarks.—1. The above table is compiled from returns collected by the Subdivisional Officers and submitted to the Director of
individual district probably only approximate to the actual.
2. The vital statistics of municipalities with a population of less than 10,000 have been included in this statement with
3. Divisional totals and the birth and death ratios per mille per annum have been omitted from this statement according to

Calcutta, the 14th February 1935.

excluding towns with a population of 10,000 and over in Bengal.

registered.

Other fevers.	Dysentery.	Diarrhœa.	Influenza.	Pneumonia.	Phthisis.	Other respiratory diseases.	Injuries including suicide.	Deaths from child-birth.	Other causes.	Total of all causes.			Total of corresponding month of previous year.			No.	Districts.
										Male.	Female.	Total.	Male.	Female.	Total.		
896	80	89	10	127	28	48	46	27	484	1,440	1,448	2,888	1,367	1,245	2,612	1	Burdwan.
762	39	23	3	35	30	73	43	7	186	1,123	1,120	2,252	913	997	1,910	2	Birbhum.
904	72	194	13	94	43	55	66	18	523	1,465	1,424	2,889	1,056	991	2,047	3	Bankura.
1,716	276	249	9	206	75	71	174	22	924	2,791	2,499	5,290	1,981	1,957	3,938	4	Midnapur.
258	25	112	4	149	37	50	51	15	222	914	867	1,781	828	882	1,710	5	Hooghly.
301	46	188	10	60	41	71	42	4	195	588	620	1,208	485	474	959	6	Howrah.
1,968	83	106	6	120	82	47	143	20	780	2,026	1,869	3,895	1,360	1,262	2,622	7	24-Parganas.
333	10	20	1	61	41	17	110	27	405	1,356	1,139	2,545	1,445	1,454	2,899	8	Nadia.
471	31	12	7	27	9	25	114	16	414	1,292	1,228	2,520	1,329	1,381	2,710	9	Murshidabad.
251	9	14	5	47	29	22	120	16	228	1,193	1,008	2,201	1,449	1,322	2,771	10	Jessore.
651	31	44	17	47	37	43	124	37	526	1,325	1,280	2,605	1,333	1,200	2,533	11	Khulna.
340	10	10	1	31	14	14	98	14	273	1,435	1,327	2,762	1,600	1,633	3,233	12	Rajshahi.
1,129	45	43	10	164	38	43	97	37	154	1,954	1,811	3,765	2,337	2,302	4,639	13	Dinajpur.
613	66	78	12	229	34	47	27	56	308	1,160	1,117	2,277	1,100	989	2,089	14	Jalpaiguri.
264	77	22	13	45	39	1	8	5	147	422	409	831	379	332	711	15	Darjeeling.
1,639	40	35	2	84	35	44	90	55	167	2,958	2,750	5,708	3,488	3,336	6,824	16	Rangpur.
592	20	16	1	37	9	33	101	23	134	1,342	1,503	2,845	1,178	1,304	2,482	17	Bogra.
633	9	11	..	32	23	18	116	20	239	1,299	1,109	2,408	1,412	1,296	2,708	18	Pabna.
233	16	6	1	7	7	3	72	..	184	1,000	822	1,822	996	916	1,912	19	Malda.
1,506	176	124	32	60	47	94	115	46	678	2,189	1,903	4,092	2,014	1,864	3,878	20	Dacca.
2,207	153	54	12	57	79	69	208	70	1,054	3,522	3,141	6,663	4,389	4,142	8,531	21	Mymensingh.
1,021	104	37	4	80	21	61	140	38	503	1,947	1,749	3,696	2,050	1,945	3,995	22	Faridpur.
1,707	186	55	6	173	22	95	125	26	512	1,865	1,533	3,398	1,843	1,539	3,382	23	Bakarganj.
2,158	34	15	3	81	9	9	101	24	150	1,545	1,563	3,108	1,228	1,333	2,561	24	Chittagong.
1,297	87	42	19	51	15	71	151	29	272	1,262	1,273	2,535	1,347	1,417	2,764	25	Noakhali.
1,189	179	44	3	51	39	30	138	36	742	1,828	1,491	3,319	1,554	1,589	3,443	26	Tippera.
under registration																27	Chittagong Hill Tracts.
25,039	1,654	1,648	204	2,155	883	1,154	2,620	688	10,404	41,241	38,062	79,303	..	..	..		
25,120	1,489	1,219	233	1,930	582	1,164	2,254	732	9,701	40,761	39,102	79,863	..	..	..		
−81	+365	+424	−29	+225	+51	−10	+366	−44	+703	+480	−1,040	−560	..	..	..		

Public Health by the District Health Officers. Taken as a whole, the statement possesses a relative value, although the figures for those of the respective districts as ordered in Government of Bengal, Municipal Department, letter No. 118 San., dated the 8th February 1918. Government of India, Education Department, letter No. 93, dated the 26th March 1918.

R. B. KHAMBATA, M.R.C.S. (ENG.), L.R.C.P. (LOND.), D.P.H. (CAMB.), *Director of Public Health, Bengal.*

DEPARTMENT OF AGRICULTURE, BENGAL.

Dacca, the 7th February 1935.

Monthly Weather and Crop Report of Bengal for January 1935.

I. *Character of the season.*—During the month under review, the rainfall was in excess of the normal in nine districts while in the rest of the Presidency it was below the average. The usual rainfall statement is appended.

II. *Progress of agricultural operations.*—Preparation of lands for jute and paddy was progressing in places. Harvesting of winter rice was nearly over and threshing continued in full swing. Harvesting of early variety of spring crops was commenced.

III. *State of standing crops.*—The state of standing crops was reported to be generally fair.

IV. *Prospects and probable outturn.*—The prospects of standing crops including vegetables are reported to be satisfactory. The outturn of sugarcane was estimated at 86 per cent. and that of winter rice at 85 per cent. of the normal this year.

V. *Damage to standing crops.*—No damage to standing crops was reported from any part of the province.

VI. *Condition of agricultural stock.*—The condition of live-stock was fair, on the whole. Stray cases of cattle disease, however, were reported from seven districts of the province and from the Cooch Behar State.

VII. *Failure of pasturage and fodder.*—Insufficiency of fodder was reported from parts of Murshidabad.

VIII. *Prices of food-grains.*—During the second fortnight of the month, the retail prices of common rice of the cheapest quality rose in fourteen districts, fell in three and remained stationary in the rest of the Presidency. The prices ranged from 10 seers per rupee at Darjeeling to 17 seers per rupee in the Chittagong Hill Tracts.

IX. *Condition of agricultural population.*—The condition of agricultural population was, on the whole, fair except in parts of Murshidabad, Birbhum and Bankura, where distress continued.

K. McLEAN,
Director of Agriculture, Bengal (offg.).

Statement showing the normal and actual rainfall in each district during January 1935.

Division.	District.	Normal district rainfall for the month of January.	Actual district rainfall for the month of January 1935.	Variation from the normal.
		Inches.	Inches.	Inches.
Presidency ..	24-Parganas ..	0·42	0·59	+0·17
	Nadia ..	0·33	0·40	+0·07
	Murshidabad ..	0·37	0·31	−0·06
	Jessore ..	0·40	0·32	−0·08
	Khulna ..	0·45	0·43	−0·02
Burdwan ..	Burdwan ..	0·27	0·84	+0·57
	Birbhum ..	0·41	0·70	+0·29
	Bankura ..	0·40	0·48	+0·08
	Midnapore ..	0·33	0·55	+0·22
	Hooghly ..	0·37	0·37	..
	Howrah ..	0·42	0·10	−0·32
Rajshahi ..	Rajshahi ..	0·41	0·15	−0·26
	Dinajpur ..	0·26	0·14	−0·12
	Jalpaiguri ..	0·44	0·31	−0·13
	Darjeeling ..	0·56	0·76	+0·20
Rajshahi—*concld.*	Rangpur ..	0·25	0·01	−0·24
	Bogra ..	0·33	0·14	−0·19
	Pabna ..	0·19	0·27	+0·08
	Malda ..	0·41	0·32	−0·09
Dacca ..	Dacca ..	0·31	0·11	−0·20
	Mymensingh ..	0·31	0·05	−0·26
	Faridpur ..	0·29	0·39	+0·10
	Bakarganj ..	0·37	Nil	−0·37
Chittagong ..	Chittagong ..	0·21	Nil	−0·21
	Tippera ..	0·37	Nil	−0·37
	Noakhali ..	0·24	Nil	−0·24
	Chittagong Hill Tracts.	0·14	Nil	−0·14
Cooch Behar ..	..	0·32	0·17	−0·15
Tripura State ..	..	0·39	Nil	−0·39

DISTRICT REPORTS ON WEATHER AND CROPS.

For the week ending on the 13th February 1935.

Summary.—Excepting light showers in places the weather was dry. Preparation of lands for autumn crops is progressing but more rain is needed for the operation. Prospects of standing crops are generally fair. During the week ending Saturday, the 9th February 1935, 5,104 persons attended different relief centres and 488 persons received gratuitous relief in the distressed areas of Murshidabad. In Birbhum and Bankura, 4,577 and 541 persons, respectively, were employed on test relief works on Saturday, the 9th February 1935. The average price of common rice for the province has remained practically stationary as compared with that of the previous week.

Serial No.	District and subdivision.	Rainfall.	Price of common rice, in seers, per rupee.		Character of the weather, condition of crops, etc.
			This week.	Previous week.	
1	2	3	4	5	6
		Inches.			
1	24-Parganas ..	Nil	10 15/16	10 7/8	Weather seasonable. No damage to crops is reported. Fodder and water are sufficient. Export and import normal.
	Diamond Harbour	Nil	14	14	
	Barrackpore ..	Nil	10	10	
	Baraset ..	Nil	10	10	
	Basirhat ..	0·36	12½	11	
2	Nadia ..	Nil	10	10	Weather seasonable. No large export or import. Harvesting of sugarcane cotinues. Prospects of standing crops are fair. Fodder and water are sufficient.
	Kushtia ..	Nil	11½	11½	
	Meherpur ..	Nil	11	11	
	Chuadanga ..	Nil	11	11	
	Ranaghat ..	Nil	9½	9½	
3	Murshidabad ..	Nil	10	10½	Weather seasonable. Prospects of standing crops are not favourable in Kandi subdivision. Fodder is not sufficient in parts of Sadar subdivision. No large export or import. Cattle-disease is reported from Jangipur subdivision. Test relief works continue. 4,434 men, 551 women and 119 children attended relief centres on the 7th February during the week ending Saturday, the 9th February 1935. Number of persons receiving gratuitous relief in the distressed areas was 103 and 385 in Lalbagh and Kandi subdivisions, respectively. Figures of Jangipur subdivision are not available.
	Lalbagh ..	Nil	11½	11	
	Jangipur ..	Nil	11½	11½	
	Kandi ..	Nil	11½	11½	
4	Jessore ..	Nil	11	11	Weather seasonable. Prospects of standing crops are fair. No large export or import. Fodder and water are sufficient.
	Jhenidah ..	Nil	13	13	
	Magura ..	Nil	12	12	
	Narail ..	Nil	13	13	
	Bongaon ..	Nil	10	10	
5	Khulna ..	0·10	11	12	Weather seasonable. Its effects on crops are fair. Fodder and water are sufficient.
	Satkhira ..	Nil	12½	12½	
	Bagerhat ..	Nil	12*	12	

Serial No.	District and sub-division.	Rainfall.	Price of common rice, in seers, per rupee.		Character of the weather, condition of crops, etc.
			This week.	Previous week.	
1	2	3	4	5	6
		Inches.			
6	Burdwan ..	Nil	10	10½	Weather seasonable. Fodder and water are sufficient.
	Asansol ..	Nil	10½	10	
	Katwa ..	Nil	11	11	
	Kalna ..	Nil	9½	9½	
7	Birbhum ..	Nil	12½	12½	Weather seasonable. Prospects of standing crops are fair. Fodder and water are sufficient. 4,577 men were employed on test relief works on Saturday, the 9th February 1935.
	Rampurhat ..	Nil	11	11	
8	Bankura ..	0·00	11	11	Weather seasonable. Stock of rice, fodder and water are sufficient. No large export or import. Prospects of standing crops are fair. Cattle-disease is reported from Bankura, Chhatna, Onda and Mejhia police-stations. 541 persons were employed on test relief works on Saturday, the 9th February 1935.
	Vishnupur ..	0·00	11½	11½	
9	Midnapore ..	Nil	9½	12½	Weather seasonable. Fodder and water are sufficient.
	Contai ..	Nil	13	13	
	Tamluk ..	Nil	11½	11½	
	Ghatal ..	Nil	11½	11½	
	Jhargram ..	Nil	11	11	
10	Hooghly ..	Nil	10	10	Weather seasonable. Fodder and water are sufficient.
	Serampore ..	Nil	10	10	
	Arambagh ..	Nil	11½	11½	
11	Howrah ..	Nil	10	10	Weather seasonable; its effects are favourable. Fodder and water are sufficient.
	Uluberia ..	Nil	11½	11½	
12	Rajshahi (Rampur Boalia).	Nil	11½	10½	Weather seasonable and favourable to the crops. Fodder and water are sufficient.
	Naogaon ..	(n)	(n)	(n)	
	Nator ..	Nil	11½	11½	
13	Dinajpur ..	Nil	12	12	Weather seasonable. Fodder and water are sufficient.
	Thakurgaon ..	Nil	15	15	
	Balurghat ..	Nil	15	12	
14	Jalpaiguri ..	0·02	12	12	Weather seasonable. No large export or import Fodder and water are sufficient.
	Alipur ..	0·23	12	12	

(n) Not reported.

Serial No.	District and subdivision.	Rainfall.	Price of common rice, in seers, per rupee.		Character of the weather, condition of crops, etc.
			This week.	Previous week.	
1	2	3	4	5	6
		Inches.			
15	Darjeeling ..	Nil	8	8	Weather favourable. Fodder and water are sufficient. Cattle-disease exists at places.
	Kurseong ..	(*n*)	(*n*)	8½	
	Siliguri ..	0·48	13½	13½	
	Kalimpong ..	0·41	8	7½	
16	Rangpur ..	Nil	11	11	Weather seasonable. Prospects of standing crops are fair. Harvesting of *rabi* crops continues. Lands are under cultivation for *aus* crops. Fodder and water are sufficient.
	Nilphamari ..	(*n*)	(*n*)	12	
	Kurigram ..	Nil	13	13	
	Gaibandha ..	(*n*)	(*n*)	12	
17	Bogra ..	Nil	14	14	The effect of weather on agricultural operation is fair. Condition of standing crops is fair. Fodder and water are sufficient.
18	Pabna ..	Nil	10½	10½	Weather seasonable. Condition of standing crops is satisfactory. Fodder and water are sufficient.
	Serajganj ..	Nil	10	10	
19	Malda ..	Nil	12½	12	Weather seasonable. Prospects of standing crops are fair Lands are being prepared for jute and *bhadoi* paddy. Transplantation of *boro* paddy has commenced. Fodder and water are available.
20	Cooch-Behar ..	0·05	14 8/16	13 8/16	Weather seasonable. Harvesting of winter paddy is almost finished. Preparation of lands for jute and autumn paddy is in progress. Prospects and condition of standing crops are fair. Fodder and water are sufficient.
21	Dacca ..	Nil	11	11	Rainfall at North Sadar (Kapasia) nil. Weather seasonable and its effects on the crops are fair. Want of rain is being keenly felt. No large export or import. Prospects of crops are fair. Fodder and water are available. Cattle-disease exists in Manikganj subdivision.
	Manikganj ..	Nil	11½	11½	
	Narayanganj ..	Nil	10½	10½	
	Munshiganj ..	Nil	11½	11½	

(*n*) Not reported.

Serial No.	District and subdivision.	Rainfall.	Price of common rice, in seers, per rupee.		Character of the weather, condition of crops, etc.
			This week.	Previous week.	
1	2	3	4	5	6
		Inches.			
22	Mymensingh ..	Nil	10½	10½	Weather seasonable. Condition of crops is fair No import or export. Fodder and water are available.
	Jamalpur ..	Nil	11 7/16	11½	
	Tangail ..	Nil	10½	10½	
	Netrakona ..	Nil	12	12	
	Kishorganj ..	Nil	10½	10½	
23	Faridpur ..	0·00	12½	12½	Weather seasonable. Condition of standing crops is fair. Fodder and water are sufficient.
	Goalundo (Rajbari).	0·00	10	10	
	Madaripur ..	0·14	13	13	
	Gopalganj (*a*) ..	0·13	13	14	
24	Bakarganj (Barisal).	Nil	13	13	Weather seasonable. Prospects of standing crops are good. Fodder and water are sufficient. Cattle-disease exists in Perojpur subdivision.
	Pirojpur ..	Nil	11½	11½	
	Patuakhali ..	0·06	11	11½	
	Dakshin Shabazpur (Bhola).	Nil	12	11	
25	Chittagong ..	0·02	12 13*	12 13*	Weather seasonable. Condition of standing *rabi* crop is fair. Fodder and water are sufficient. Panga salt sells at 11 seers per rupee at Sadar and 12 seers per rupee at Cox's Bazar.
	Cox's Bazar ..	Nil	13	(*n*)	
26	Tippera (Comilla)	Nil	13	13	Prospects of crops are fair. Cattle-disease exists in Matlab police-station.
	Brahmanbaria ..	Nil	11	11	
	Chandpur ..	Nil	13 4/16	13 4/16	
27	Noakhali ..	Nil	13	14	Weather seasonable. Condition of standing crops is, fair. Fodder and water are sufficient.
	Feni ..	2·27	13½	(*n*)	
28	Chittagong Hill Tracts.	Nil	17	17	Weather seasonable. Its effects on agricultural operations are favourable. Fodder and water are sufficient.
29	Tripura State ..	Nil	12½	(*n*)	Weather seasonable. Condition of cattle is good. Fodder and water are sufficient. Cotton sells at Rs. 8 to Rs. 15 and jute at Rs. 2-8 to Rs. 4-4 per maund.

(*n*) Not reported.

(*a*) The rainfall at Haridaspur, which is very near to Gopalganj, is shown here.

* Burma rice.

J. C. BASU, for *Director of Agriculture, Bengal.*

Dacca, the 18th February 1935.

CORPORATION OF CALCUTTA.

NOTICES.

Central Municipal Office, the 14th February 1935.

It is hereby notified for general information that the Corporation of Calcutta under powers vested in them in this behalf have by a resolution, dated the 23rd January 1935, modified the alignment of Bright Street in Ward 21 so far as it affects the portion of premises No. 67, Bright Street, containing a Darga which was originally sanctioned by the Corporation on 3rd November 1926.

A copy of the plan showing the modified alignment may be seen in the office of the Chief Valuer and Surveyor of the Corporation any day during office hours on payment of usual fees.

Central Municipal Office, the 15th February 1935.

Bye-election to elect a Councillor for the General Constituency—Beniapukur (Ward No. 20)—in one of the two seats reserved for Muhammadans.

In compliance with the provisions of clause 8 of section 29 of Bengal Act III of 1923, it is hereby notified that Haji Md. Yusuf has been declared duly elected as a Councillor of the Corporation of Calcutta for the General Constituency—Beniapukur (Ward No. 20)—in one of the two seats reserved for Muhammadans.

J. C. MUKERJEA,
Chief Executive Officer.

IRRIGATION DEPARTMENT,

Statement showing heights above P. W. D. datum and low water in the rivers Ganges, Bhagirathi, Jalangi and Brahmaputra for the

Date.	River Ganges.													
	Mirzapur. Zero of gauge is 200·00 ft. above P. W. D. datum.		Benares. Zero of gauge is 197·05 ft. above P. W. D. datum.		Buxar.* Zero of gauge is 169·91 ft. above Bengal P. W. D. datum.		Dinapore. Zero of gauge is 135·51 ft. above P. W. D. datum.		Monghyr. Zero of gauge is at P. W. D. datum.		Rajmahal. Zero of gauge is at P. W. D. datum.	
	Distance in miles.	From Allahabad, 86.	From Allahabad, 134.	From Mirzapur, 48.	From Benares, 90.		From Benares, 177.	From Buxar, 87.	From Benares, 287.	From Dinapore, 110.	From Benares, 407.	From Monghyr, 120.
	Highest gauge reading.	2nd September 1916. 265·97 ft.	2nd September 1916. 244·55 ft.		7th September 1919. 203·40 ft.		21st August 1923. 172·41 ft.		8th September 1901. 129·60 ft.		15th August 1913. 90·37 ft.	
	Lowest gauge reading.	11th April 1878. 198·92 ft.	20th May 1879. 191·70 ft.		15th May 1914. 161·65 ft.		26th April 1902. 136·11 ft.		2nd May 1914. 95·75 ft.		12th May 1916. 55·46 ft.	
		Height above zero of gauge.	Height above P. W. D. datum.	Height above zero of gauge.	Height above P. W. D. datum.	Height above zero of gauge.	Height above P. W. D. datum.	Height above zero of gauge.	Height above P. W. D. datum.	Height above zero of gauge.	Height above P. W. D. datum.	Height above zero of gauge.	Height above P. W. D. datum.
1	2	3	4	5	6	7	8	9	10	11	12	13	14
1st ..	..	17·67	217·67	3·50	200·55	7·92	177·83	14·40	149·91	104·20	104·20	63·90	63·90
2nd ..	..	17·58	217·58	3·50	200·55	7·75	177·66	14·40	149·91	104·20	104·20	63·70	63·70
3rd ..	..	17·58	217·58	3·42	200·47	7·42	177·33	14·30	149·81	104·10	104·10	63·60	63·60
4th ..	..	17·54	217·54	3·33	200·30	7·17	177·08	14·10	149·61	104·00	104·00	63·45	63·45
5th ..	..	17·50	217·50	3·08	200·13	7·00	176·91	13·90	149·41	104·00	104·00	63·30	63·30
6th ..	..	17·33	217·33	2·92	199·97	6·83	176·74	13·80	149·31	103·90	103·90	63·20	63·20
7th ..	..	17·17	217·17	2·83	199·88	6·67	176·58	13·80	149·31	103·90	103·90	63·05	63·05
8th ..	..	17·00	217·00	2·83	199·88	6·58	176·49	13·70	149·21	103·80	103·80	62·90	62·90
9th ..	..	16·83	216·83	2·75	199·80	6·58	176·49	13·40	148·91	103·80	103·80	62·85	62·85
10th ..	..	16·67	216·67	2·67	199·72	6·50	176·41	12·90	148·41	103·80	193·80	62·75	62·75
11th ..	..	16·58	216·58	2·58	199·63	6·42	176·33	12·90	148·41	103·70	103·70	62·65	62·65
12th ..	..	16·42	216·42	2·42	199·47	6·42	176·33	12·90	148·41	103·70	103·70	62·55	62·55
13th ..	..	16·25	216·25	2·33	199·38	6·33	176·24	12·80	148·31	103·50	103·50	62·45	62·45
14th ..	..	16·00	216·00	2·25	199·30	6·33	176·24	12·80	148·31	103·30	103·30	62·40	62·40
15th ..	..	15·83	215·83	2·08	199·13	6·25	176·16	12·80	148·31	103·10	103·10	62·35	62·35
16th ..	..	15·67	215·67	2·00	199·05	6·25	176·16	12·80	148·31	103·00	103·00	62·30	62·30
17th ..	..	15·50	215·50	1·92	198·97	6·25	176·16	12·80	148·31	103·00	103·00	62·20	62·20
18th ..	..	15·33	215·33	1·83	198·88	6·25	176·16	12·80	148·31	102·90	102·90	62·10	62·10
19th ..	..	15·17	215·17	1·83	198·88	6·25	176·16	12·80	148·31	102·80	102·80	62·00	62·00
20th ..	..	15·08	215·08	1·83	198·88	6·17	176·08	12·80	148·31	102·80	102·80	61·90	61·90
21st ..	..	15·00	215·00	1·83	198·88	6·17	176·08	12·80	148·31	102·70	102·70	61·85	61·85
22nd ..	..	14·92	214·92	1·83	198·88	6·17	176·08	12·80	148·31	102·70	102·70	61·80	61·80
23rd ..	..	14·83	214·83	1·75	198·80	6·17	176·08	12·80	148·31	102·70	102·70	61·70	61·70
24th ..	..	14·83	214·83	1·75	198·80	6·17	176·08	12·80	148·31	102·60	102·60	61·65	61·65
25th ..	..	14·79	214·79	1·75	198·80	6·08	175·99	12·80	148·31	102·60	102·60	61·55	61·55
26th ..	..	14·75	214·75	1·75	198·80	6·08	175·99	12·80	148·31	102·50	102·50	61·50	61·50
27th ..	..	14·66	214·66	1·75	198·80	6·08	175·99	12·80	148·31	102·50	102·50	61·45	61·45
28th ..	..	14·66	214·66	1·75	198·80	6·08	175·99	12·80	148·31	102·50	102·50	61·35	61·35
29th ..	..	14·58	214·58	1·75	198·80	6·08	175·99	12·80	148·31	102·40	102·40	61·25	61·25
30th ..	..	14·58	214·58	1·75	198·80	6·00	175·91	12·80	148·31	102·40	102·40	61·20	61·20
31st ..	..	14·54	214·54	1·67	198·72	6·00	175·91	12·80	148·31	102·30	102·30	61·10	61·10
Average level	..	15·90	215·90	2·30	199·35	6·47	176·38	13·15	148·66	103·21	103·21	62·32	62·32

NOTE.—Since the 1st January 1929 the datum of all gauges has been finally altered to refer to the Bengal Public Works Department datum which is 6·25 feet a... levels recorded since each gauge was established have been prepared.

*The zero of the Buxar gauge has been checked from the G. T. S. Bench marks Nos. 125 and 126 on line 70K and found to be 169·91 feet above the D...

†On and from 1st January 1931, High water level and Low water level readings are shown at Swarupganj.

(A) The value of zero of gauge at the station was 42·20 P. W. D. datum on 1st December 1934, 35·69 P. W. D. datum from 2nd to 3rd December 1934, 40·... shown thus :—on 1st December 1934—0·30, from 2nd to 3rd December 1934—6·78, from 4th to 24th December 1934 :—0·93, and 25th to 31st December 1934—3·31.

The 13th February 1935.

BENGAL.

month of December 1934 and the highest reading of each gauge above P. W. D. datum as well as the lowest gauge reading since 1876.

				River Bhagirathi.		River Jalangi.				River Brahmaputra.	
(A) Rampur-Boalia. Zero of gauge is at P. W. D. datum.		Goalundo. Zero of gauge is 1·409 ft. above Bengal P.W.D. datum.		Berhampore. Zero of gauze is at P.W.D. datum.		Swarupganj.† Zero of gauge is at P. W. D. datum.				Gauhati. Zero of gauge is 136·958 ft. above P. W. D. datum.	
From Benares, 471.	From Rajmahal, 64.	From Benares, 591.	From Rampur-Boalia, 120.								
6th August 1879. 62·24 ft.		16th August 1931. 29·60 ft.		14th August 1890. 63·46 ft.		25th September 1900. 35·30 ft.				24th August 1906. 169·25 ft.	
24th April 1931. 32·05 ft.		8th February 1914. 2·41 ft.		26th May 1884. 32·00 ft.		7th May 1896. 2·11 ft.				9th February 1888. 129·23 ft.	
Height above zero of gauge.	Height above P.W.D. datum.	Height above zero of gauge.	Height above P.W.D. datum.	Height above zero of gauge.	Height above P.W.D. datum.	Height above zero of gauge. H. W. L.	Height above zero of gauge. L. W. L.	Height above P. W. D. datum. H. W. L.	Height above P. W. D. datum. L. W. L.	Height above zero of gauge.	Height above P. W. D. datum.
15	16	17	18	19	20	21	22	23	24	25	26
										Below zero	
0·30	42·59	16·40	17·809	35·80	35·80	6·03	5·93	6·03	5·93	0·50	136·458
6·80	42·49	16·20	17·609	35·75	35·75	5·99	5·84	5·99	5·84	0·60	136·358
6·75	42·44	15·80	17·209	35·70	35·70	6·04	5·79	6·04	5·79	0·70	136·258
1·90	42·16	15·80	17·209	35·65	35·65	6·16	5·77	6·16	5·77	0·80	136·158
1·80	42·06	15·90	17·309	35·60	35·60	6·40	5·85	6·40	5·85	0·90	136·058
1·70	41·96	15·90	17·309	35·55	35·55	6·72	5·90	6·72	5·90	1·00	135·958
1·60	41·86	15·80	17·209	35·55	35·55	6·99	6·03	6·99	6·03	1·20	135·758
1·55	41·81	15·90	17·309	36·50	36·50	7·18	5·99	7·18	5·99	1·40	135·558
1·40	41·66	15·80	17·209	36·00	36·00	7·20	6·08	7·20	6·08	1·70	135·258
1·30	41·56	15·70	17·109	36·00	36·00	7·05	6·02	7·05	6·02	2·50	134·458
1·20	41·46	15·70	17·109	35·95	35·95	6·65	5·86	6·65	5·86	2·70	134·258
1·05	41·31	15·40	16·809	35·45	35·45	6·25	5·70	6·25	5·70	2·80	134·158
0·95	41·21	15·20	16·602	35·40	35·40	5·89	5·53	5·89	5·53	3·10	133·858
0·90	41·16	14·90	16·309	35·35	35·35	5·65	5·38	5·65	5·38	3·20	133·758
0·80	41·06	14·70	16·109	35·30	35·30	5·46	5·30	5·46	5·30	3·40	133·558
0·70	40·96	14·60	16·009	35·30	35·30	5·40	5·23	5·40	5·23	3·45	133·508
0·65	40·91	14·50	15·909	35·25	35·25	5·40	5·14	5·40	5·14	3·60	133·358
0·50	40·76	14·30	15·709	35·20	35·20	5·39	5·15	5·39	5·15	3·60	133·358
0·45	40·71	14·20	15·609	35·20	35·20	5·41	5·11	5·41	5·11	3·70	133·258
0·40	40·66	14·10	15·509	35·20	35·20	5·48	5·10	5·48	5·10	3·85	133·108
0·30	40·56	14·00	15·409	35·20	35·20	5·58	5·09	5·58	5·09	3·90	133·058
0·20	40·46	13·90	15·309	35·20	35·20	5·69	5·11	5·69	5·11	3·90	133·058
0·10	40·36	13·80	15·209	35·20	35·20	5·59	5·09	5·59	5·09	4·10	132·858
0·10	40·36	13·70	15·109	35·20	35·20	5·43	5·04	5·43	5·04	4·10	132·858
3·60	40·44	13·50	14·909	35·15	35·15	5·32	4·98	5·32	4·98	4·10	132·858
3·50	40·34	13·40	14·809	35·15	35·15	5·23	4·93	5·23	4·93	4·30	132·658
3·40	40·24	13·40	14·809	35·15	35·15	5·10	4·89	5·10	4·89	4·30	132·658
3·30	40·14	13·30	14·709	35·10	35·10	5·00	4·84	5·00	4·84	4·40	132·558
3·20	40·04	13·00	14·409	35·10	35·10	4·87	4·78	4·87	4·78	4·40	132·558
3·10	39·94	12·90	14·309	35·10	35·10	4·78	4·72	4·78	4·72	4·40	132·558
3·10	39·94	12·80	14·209	35·05	35·05	4·71	4·63	4·71	4·63	4·60	132·358
Vide footnote below		14·66	16·069	35·43	35·43	5·81	5·38	5·81	5·38	2·94	134·018

the Kidderpore Old Dock Sill. The values of the highest and lowest readings have similarly been altered. Printed notes on the correction to be applied to all reduced P. W. D. datum.

P. W. D. datum from 4th to 24th December 1934 and 36·84 P. W. D. datum from 25th to 31st December 1934. Hence the average level at the station is four times

J. D. WATSON, *Personal Assistant to the Chief Engineer to the Government of Bengal, Irrigation Department.*

Statement of weekly gauge readings on the river Ganges at Rampur Boalia for the week ending the 2nd February 1935.

Date.	Hour.	Height of surface above P. W. D. datum.	Height of surface above P. W. D. datum on the same date last year.	Remarks.
1935.				Zero of gauge referred to B. M. on Rajshahi College step ; value 64·73.
27th January	7 a.m.	38·79	38·23	
28th „	7 „	38·79	38·28	Value of 0 of the gauge= 36·84 P. W. D.
29th „	7 „	38·79	38·28	
30th „	7 „	38·74	38·28	
31st „	7 „	38·53	38·33	
1st February	7 „	38·53	38·23	Value of 0 of the gauge= 35·23 P. W. D.
2nd „	7 „	38·53	38·23	

Highest recorded level on 26-8-1879=64·24.
Lowest recorded level on 24-4-1931=32·05.

J. MACKIE, *Subdivisional Officer,*
Irrigation Department, Rajshahi.

Rampur Boalia, the 4th February 1935.

Statement showing the gauge readings at Dacca Water works Station on the river Buriganga for the week ending 9th February 1935.

Date.	At highest water.		At lowest water.		Commencement of—		Remarks.	
	Time.	Reading.	Time.	Reading.	Ebb tide.	Flow tide.	7 a.m.	5 p.m.
1935.								
3rd February ..	11-20	4·9	17-15	3·3	11-30	17-27	4·2	3·25
4th „ ..	12-10	5·1	..	..	12-20	..	4·0	4·15
5th „ ..	13-0	5·4	6-50	3·8	13-8	7-0	3·8	4·45
6th „ ..	13-45	5·7	7-40	4·1	13-56	7-50	4·0	5·0
7th „ ..	14-35	6·0	8-27	4·4	14-45	8-35	4·2	
8th „ ..	15-25	5·8	9-20	4·2	15-35	9-25	4·6	5·25
9th „ ..	16-15	5·6	10-10	4·0	16-25	10-20	4·5	5·4

B. M. on settling tank 39·49 O. M. S. L. Zero is at O. M. S. L.

Notable high and low water-levels of previous years.

	Taken at high tide.			Taken at low tide.	
27th August	1906 ..	70·5	23rd February	1907 ..	51·06
5th September	1909 ..	66·86	13th „	1908 ..	51·06
10th August	1910 ..	69·86	12th March	1912 ..	51·06
1st „	1911 ..	68·46	6th „	1914 ..	50·60
13th „	1912 ..	67·16	22nd February	1915 ..	50·30
31st „	1915 ..	69·7	15th „	1916 ..	50·60
8th „	1916 ..	68·1	3rd March	1917 ..	51·0
12th „	1917 ..	67·1	21st February	1918 ..	51·40
13th „	1918 ..	69·12	26th „	1919 ..	50·4
2nd „	1919 ..	66·8	18th „	1920 ..	50·9
8th September	1920 ..	66·9	19th „	1921 ..	50·9
28th July	1921 ..	68·4	8th March	1922 ..	51·05
10th August	1922 ..	68·00	14th „	1923 ..	50·8
31st July	1923 ..	66·15	16th February	1924 ..	50·50
29th August	1924 ..	68·82	5th March	1925 ..	50·9
8th September	1925 ..	68·52	9th February	1926 ..	2·2
15th August	1926 ..	19·6	27th „	1927 ..	2·10
17th September	1927 ..	18·70	16th „	1928 ..	2·2
22nd August	1928 ..	20·0	21st „	1929 ..	2·0
13th July	1929 ..	17·8	24th „	1930 ..	2·3
12th September	1930 ..	18·65	28th „	1931 ..	2·2
16th August	1931 ..	21·7	18th „	1932 ..	1·8
6th September	1932 ..	18·5	6th „	1933 ..	2·10
7th „	1933 ..	17·80			
23rd August	1934 ..	19·35	26th March	1934 ..	2·40

N.B.—Zero of the gauge at Dacca Waterworks prior to 11 a.m. on the 8th January 1926= —48·51 with reference to P.W.D. datum.

Zero of the gauge at Dacca Waterworks since 11 a.m. of the 8th January 1926=0·00 with reference to P. W. D. datum.

[ILLEGIBLE], *Executive Engineer,*
Khulna Division.

Khulna, the 16th February 1935.

Vital statistics of towns with a population of 50,000 and over of the Bengal Presidency for the week ending Saturday, the 9th February 1935.

Districts.	No.	Towns.	Population under registration according to census of 1931.			Births registered.		Deaths registered.																								
			Male.	Female.	Total.	Number registered (excluding still-births).	Still-births registered.	Cholera.	Small-pox.	Plague.	Cerebro spinal meningitis.	Malaria.	Enteric fever.	Measles.	Relapsing fever.	Kala-azar.	Influenza.	Other fevers.	Dysentery.	Diarrhœa.	Pneumonia.	Phthisis.	Other respiratory diseases.	Injuries including suicide.	Deaths from child-birth.	Other causes.	Total of all causes.			Total of corresponding week of the previous year.		
																											Male.	Female.	Total	Male.	Female.	Total.
Calcutta ..	1	Calcutta ..	814,948	381,786	1,196,734	402	43	66	25	..	19	18	10	2	..	2	10	22	84	9	98	70	63	18	1	279	401	345	746	469	361	830
Burdwan ..	2	Asansol Mining Settlement.	209,544	173,136	382,680	107	3	2	..	..	..	1	..	..	..	..	..	47	6	..	7	2	5	2	1	42	63	52	115	47	29	76
Howrah ..	3	Howrah ..	145,120	79,753	224,873	99	5	8	1	..	..	4	4	1	..	..	..	8	11	13	25	6	20	5	..	61	99	68	167	85	65	150
Dacca ..	4	Dacca ..	79,365	59,153	138,518	76	3	..	..	..	..	..	2	..	..	1	..	9	3	2	8	..	10	..	2	22	39	20	59	27	26	53
24-Parganas	5	Bhatpara ..	60,134	24,841	84,975	22	..	1	..	..	..	..	1	..	..	..	..	5	..	..	1	..	..	..	..	4	8	4	12	9	3	12
Chittagong ..	6	Chittagong	35,049	18,107	53,156	21	..	..	..	..	..	..	..	..	..	..	..	3	1	..	..	..	..	1	..	8	10	3	13	6	11	17

R. B. KHAMBATA, M.R.C.S. (ENG.), L.R.C.P. (LOND.), D.P.H. (CAMB.), *Director of Public Health, Bengal*

Calcutta, the 15th February 1935.

Printed and published by the Superintendent, Government Printing, Bengal Government Press, Alipore, Bengal, on the 21st February 1935.

Registered No. C207

No. 9 of 1935

The Calcutta Gazette

Published by Authority

THURSDAY, FEBRUARY 28, 1935.

CONTENTS:

	Page.
Part I.—Orders and Notifications by the Governor of Bengal, the Government of Bengal, the High Court, Government Treasury, etc.	419—458
Part IA.—Orders and Notifications by the Government of India republished for general information	29—30
Part IB.—Educational Notices ..	347—354
Part II.—Advertisements	165—203
Part III.—Acts of the Bengal Legislative Council	*Nil*
Part IV.—Bills introduced in the Bengal Legislative Council, Reports of Select Committees presented or to be presented to that Council, and Bills published before introduction in that Council—	
Report of the Select Committee on the Court-fees (Bengal Amendment) Bill, 1935, with the Bill embodying amendments recommended by the Committee	53—69
Report of the Select Committee on the Albert Victor Leper Hospital Bill, 1935, with the Bill embodying amendments recommended by the Committee	70—84
Part V.—Acts of the Indian Legislature assented to by the Governor-General and Ordinances promulgated under section 72 of the Government of India Act ..	*Nil*
Part VI.—Bills introduced in the Council of State and Legislative Assembly, Reports of Select Committees presented to the Council and Assembly and Bills published under rule 18 of the Indian Legislative Rules—	
The Indian Naturalization (Amendment) Bill, 1935, with Statement of Objects and Reasons	7—8.
Supplement No. 9 :—	
Cotton Ginning and Pressing—Daily Rainfall—River water-levels—Weekly Vital Statistics—Weekly Weather and Crop Report—Prices-current—Weekly gauge readings	297—326

PART I

Orders and Notifications by the Governor of Bengal, the Government of Bengal, the High Court, Government Treasury, etc.

Orders by His Excellency the Governor of Bengal.

No. 1770A.—20th February 1935. — In exercise of the power conferred on him under clause (*b*) of the proviso to sub-section (*2*) of section 72A of the Government of India Act, His Excellency the Governor hereby nominates Rai Shailendra Nath Banerji Bahadur to be a member of the Bengal Legislative Council for the purpose of the Bengal Development Bill, 1935, with effect from this date until the conclusion of the proceedings in relation to the Bill.

E. N. Blandy,

Chief Secy. to the Govt. of Bengal (offg.).

Orders by the Government of Bengal.

No. 1977A.

Appointments and Transfers.

GENERAL.

Faridpur-Dacca. — No. 1843A. — 21st February 1935.—In exercise of the powers conferred by sub-section (2) of section 10 of the Code of Criminal Procedure, 1898 (Act V of 1898), the Governor in Council is pleased to appoint Rai Sahib Jamini Prasanna Ray, Deputy Magistrate and Deputy Collector, Madaripur, Faridpur, temporarily to be Additional District Magistrate, Dacca, and to direct that he shall have during the period he is so employed all the powers of a District Magistrate under the said Code and under all other laws in force in that district.

Mymensingh.—No. 1869A.—22nd February 1935.—Mr. Santosh Kumar Chatterjee, I.C.S., Joint Magistrate and Deputy Collector, Jamalpur, Mymensingh, is appointed to act, until further orders, as an Additional District and Sessions Judge of that district.

Nadia-Calcutta. — No. 1880A. — 22nd February 1935.—Mr. Satyendramohan Banerjee, I.C.S., officiating Magistrate and Collector, Nadia, is appointed to act, until further orders, as Secretary to the Board of Revenue, Bengal.

Mymensingh-Nadia. — No. 1884A. — 22nd February 1935.—Mr. Subimal Dutt, I.C.S., officiating Additional District and Sessions Judge, Mymensingh, is appointed to act, until further orders, as Magistrate and Collector, Nadia.

Howrah-Faridpur. — No. 1889A. — 22nd February 1935.—Mr. Shaibal Kumar Gupta, I.C.S., officiating Additional District and Sessions Judge, Hooghly, at Howrah, is appointed to act, until further orders, as District and Sessions Judge, Faridpur.

Faridpur.—No. 1894A.—22nd February 1935.—Babu Kunja Bihari Ray, officiating District and Sessions Judge, Faridpur, is appointed to act, until further orders, as Additional District and Sessions Judge of that district.

Faridpur-Tippera-Chittagong.—No. 1898A. —22nd February 1935.—Babu Raman Chandra Banarji, officiating Additional District and Sessions Judge, Faridpur, is appointed to act, until further orders, as Additional District and Sessions Judge, Tippera and Chittagong.

Jalpaiguri. — No. 1922A. — 23rd February 1935.—Babu Jogesh Chandra Chaudhuri, Deputy Magistrate and Deputy Collector, Jalpaiguri, is appointed temporarily to act as Deputy Commissioner of that district.

POLICE.

Pabna-Dacca.—No. 1798A.—20th February 1935.—Babu Surendra Nath Lahiri, officiating Deputy Superintendent of Police, Serajganj, Pabna, is transferred to the headquarters station of the Dacca district.

Midnapore-Mymensingh. — No. 1799A. — 20th February 1935. — Babu Anath Nath Ganguli, Deputy Superintendent of Police, Kharagpur, Midnapore, is transferred to the Kishoreganj subdivision of the Mymensingh district and is placed in charge of the police work of that subdivision.

Mymensingh-Dacca. — No. 1800A. — 20th February 1935.—Khan Bahadur Ruknuddin Ahmad, Deputy Superintendent of Police, Kishoreganj, Mymensingh, is transferred to the Munshiganj subdivision of the Dacca district and is placed in charge of the police work of that subdivision.

Calcutta.—No. 1801A. — 20th February 1935.—Babu Probhat Ranjan Biswas, Inspector of Police, is appointed to act, until further orders, as Deputy Superintendent of Police in the Intelligence Branch, Criminal Investigation Department.

Calcutta.—No. 1802A. — 20th February 1935.—Rai Sahib Manmatha Nath Sen, Inspector of Police, is appointed to act, until further orders, as Deputy Superintendent of Police in the Intelligence Branch, Criminal Investigation Department.

Calcutta.—No. 1803A. — 20th February 1935.—Rai Sahib Basanta Kumar Mukharji, Inspector of Police, is appointed to act, until further orders, as Deputy Superintendent of Police in the Intelligence Branch, Criminal Investigation Department.

Dacca-Midnapore.—No. 1816A.—20th February 1935.—Mr. D. S. Maxted, I.P., Probationary Assistant Superintendent of Police, Dacca, is transferred to Kharagpur, Midnapore, and is placed in charge of police work of the "B" Circle of the Sadar subdivision of that district.

Chittagong-Mymensingh. — No. 1819A.— 20th February 1935.—Mr. L. H. Lewisohn, I.P., Probationary Assistant Superintendent of Police, Chittagong, is transferred to the Tangail subdivision of the Mymensingh district and is placed in charge of the police work of that subdivision.

Rajshahi-Pabna.—No. 1822A.—20th February 1935.—Mr. Kazi Anwarul Haque, I.P., Probationary Assistant Superintendent of Police, Rajshahi, is transferred to the Serajganj subdivision of the Pabna district and is placed in charge of the police work of that subdivision.

Dacca.—No. 1825A.—20th February 1935.—Mr. Sudhir Kumar Sinha, I.P., Probationary Assistant Superintendent of Police, Munshiganj, Dacca, is transferred to the headquarters station of that district.

Leave.

GENERAL.

Mymensingh.—No. 1708A. — 19th February 1935.—Babu Manoranjan Chaudhuri, Deputy Magistrate and Deputy Collector, on probation, Jamalpur, Mymensingh, is allowed leave on average pay, under rule 81 (*b*) (*ii*) of the Fundamental Rules, from the 18th March to the 23rd March 1935, inclusive.

Hooghly.—No. 1796A. — 20th February 1935.—Babu Kailashpati Ghosh, Deputy Magistrate and Deputy Collector, Hooghly, is allowed leave on average pay for four months, under rule 81 (*b*) (*ii*) of the Fundamental Rules, with effect from the 11th February 1935.

Burdwan. — No. 1876A. — 22nd February 1935.—Mr. M. M. Stuart, I.C.S., officiating Magistrate and Collector, Burdwan, is allowed leave from the 18th March 1935 to the 2nd February 1936, inclusive, viz., leave on average pay for eight months, under rule 81 (*b*) (*i*) of the Fundamental Rules, and leave on half average pay for the remaining period, under rule 81 (*d*) of those Rules.

No. 1912A.—22nd February 1935.—Mr. K. A. L. Hill, I.C.S., is allowed leave, with effect from the 23rd March 1935, or any subsequent date on which he may avail himself of it, up to the 23rd December 1935, viz., leave on average pay for seven months, under rule 81 (*b*) (*i*) of the Fundamental Rules, and leave on half average pay for the remaining period, under rule 81 (*d*) of those Rules.

Jalpaiguri.—No. 1918A.—23rd February 1935.—Mr. Hubert Graham, I.C.S., Deputy Commissioner, Jalpaiguri, is allowed leave for eight months, viz., leave on average pay for three months and twenty-two days, under rule 81 (*b*) (*i*) of the Fundamental Rules, with effect from the 18th March 1935, and leave on half average pay for the remaining period, under rule 81 (*d*) of those Rules.

Dacca.—No. 1953A.—25th February 1935.—In modification of the orders of the 12th February 1935, Babu Hira Lal Mukharji, officiating Additional District and Sessions Judge, Dacca, is allowed leave on average pay, under the proviso to rule 81 (*b*) (*ii*) of the Fundamental Rules, from the 28th January 1935 to the 18th April 1935, inclusive.

POLICE.

Howrah.—No. 1839A.—21st February 1935.—Babu Srish Chandra Chaudhuri, officiating Deputy Superintendent of Police, Howrah, is allowed leave on average pay for three months, under rule 81 (*b*) (*ii*) of the Fundamental Rules, with effect from the 12th December 1934.

Calcutta.—No. 1840A.—21st February 1935.—Babu Akshay Kumar Datta, officiating Deputy Superintendent of Police, Intelligence Branch, is allowed leave on average pay for four months, under rule 81 (*b*) (*ii*) of the Fundamental Rules, with effect from the 1st March 1935.

Calcutta.—No. 1930A.—23rd February 1935.—Rai Sahib Prabodh Chandra Mazumdar, officiating Deputy Superintendent of Police, Intelligence Branch, is allowed leave on average pay for one month and fifteen days, under rule 81 (*b*) (*ii*) of the Fundamental Rules, with effect from the 1st March 1935, or any subsequent date on which he may be relieved.

ECCLESIASTICAL.

No. 1853A.—21st February 1935.—The Reverend P. Higham, a Chaplain on the Indian Ecclesiastical Establishment, is allowed leave for seven months, with effect from the 20th March 1935 or any subsequent date on which he may avail himself of it, viz., leave on average pay for six months and leave on half average pay in continuation for the remaining period, under rule 81 of the Fundamental Rules.

E. N. BLANDY,

Chief Secy. to the Govt. of Bengal (offg.).

POLITICAL DEPARTMENT.

Political.

NOTIFICATION.

No. 2201P.—26th February 1935.—In exercise of the powers conferred by section 7, sub-section (*6*) of the Cinematograph Act, 1918 (II of 1918), the Governor in Council is pleased to direct that the film entitled "The Mill" or "Mazdoor" (Syn.) produced by Ajanta Cinetone shall be deemed to be an uncertified film in the whole of the Bengal Presidency.

E. N. BLANDY,

Chief Secy. to the Govt. of Bengal (offg.).

Special.

NOTIFICATIONS.

No. 4681X.—28th February 1935.—Whereas in the opinion of the Government of Bengal there are reasonable grounds for believing that Babu Makhan Lal Kar, son of the late Babu Aswini Kar, of village Jagpatha, police-station Naria, and of Lonesingh, in the district of Faridpur, is a person in respect of whom an order may lawfully be made under sub-section (*1*) of section 2 of the Bengal Criminal Law Amendment Act, 1930; and

Whereas the Governor in Council on the 15th January 1935 in exercise of the powers conferred by the said section 2 was pleased to order the said Babu Makhan Lal Kar to be committed to custody in the nearest District or Central Jail, and the arrest without warrant of the said Babu Makhan Lal Kar at any place where he might be found by any police officer with a view to his commitment to custody; and

Whereas the said Babu Makhan Lal Kar has not been arrested and the said order under section 2 of the said Act has not been served personally on the said person, and whereas due diligence has in the opinion of the Local Government been exercised to effect such personal service;

Now, therefore, the Governor in Council in exercise of the powers conferred by sub-section (*2*) of section 3 of the Bengal Criminal Law Amendment Act, 1930, is pleased to direct the said Babu Makhan Lal Kar, son of the late Babu Aswini Kar, of village Jagpatha, police-station Naria, and of Lonesingh, in the district of Faridpur, to appear before the Superintendent of Police, Faridpur, at Faridpur, within 15 days of this date for the purpose of receiving the aforesaid order.

No. 4721X.—28th February 1935.—Whereas in the opinion of the Government of Bengal there are reasonable grounds for believing that Babu Niranjan Ghosal, son of Babu Rasamay Ghosal, of village Swarnaghosh, police-station Palong, in the district of Faridpur, is a person in respect of whom an order may lawfully be made under sub-section (*1*) of section 2 of the Bengal Criminal Law Amendment Act, 1930; and

Whereas the Governor in Council on the 23rd January 1935 in exercise of the powers conferred by the said section 2 was pleased to order the said Babu Niranjan Ghosal to be committed to custody in the nearest District or Central Jail, and the arrest without warrant of the said Babu Niranjan Ghosal at any place where he might be found by any police officer with a view to his commitment to custody; and

Whereas the said Babu Niranjan Ghosal has not been arrested and the said order under section 2 of the said Act has not been served personally on the said person, and whereas due diligence has in the opinion of the Local Government been exercised to effect such personal service;

Now, therefore, the Governor in Council in exercise of the powers conferred by sub-section (*2*) of section 3 of the Bengal Criminal Law Amendment Act, 1930, is pleased to direct the said Babu Niranjan Ghosal, son of Babu Rasamay Ghosal, of village Swarnaghosh, police-station Palong, in the district of Faridpur, to appear before the Superintendent of Police, Faridpur, at Faridpur, within 15 days of this date for the purpose of receiving the aforesaid order.

No. 5043X.—28th February 1935.—Whereas in the opinion of the Government of Bengal there are reasonable grounds for believing that Babu Sitanath Dey *alias* Sitapati *alias* Brahmachary, son of the late Babu Guru Charan Dey, of village Tulashur, police-station Palong, in the district of Faridpur, is a person in respect of whom an order may lawfully be made under sub-section (*1*) of section 2 of the Bengal Criminal Law Amendment Act, 1930; and

Whereas the Governor in Council on the 26th January 1935 in exercise of the powers conferred by the said section 2 was pleased to order the said Babu Sitanath Dey *alias* Sitapati *alias* Brahmachary to be committed to custody in the nearest District or Central Jail, and the arrest without warrant of the said Babu Sitanath Dey *alias* Sitapati *alias* Brahmachary at any place where he might be found by any police officer with a view to his commitment to custody; and

Whereas the said Babu Sitanath Dey *alias* Sitapati *alias* Brahmachary has not been arrested and the said order under section 2 of the said Act has not been served personally on the said person, and whereas due diligence has in the opinion of the Local Government been exercised to effect such personal service;

Now, therefore, the Governor in Council in exercise of the powers conferred by sub-section (*2*) of section 3 of the Bengal Criminal Law Amendment Act, 1930, is pleased to direct the said Babu Sitanath Dey *alias* Sitapati *alias* Brahmachary, son of the late Babu Guru Charan Dey, of village Tulashur, police-station Palong, in the district of Faridpur, to appear before the Superintendent of Police, Faridpur, at Faridpur, within 15 days of this date for the purpose of receiving the aforesaid order.

S. N. ROY,

Addl. Secy. to the Govt. of Bengal.

POLICE DEPARTMENT.

Calcutta Police Notification.

No. 1628/T.D. 176-34/A.—23rd February 1935.—The following draft of a notification, which, with the previous sanction of the Governor in Council, the Commissioner of Police, Calcutta, proposes to issue under section 62 (*1*) (*b*) of the Calcutta Police Act, 1866 (Bengal Act IV of 1866), is hereby published for the information of persons likely to be affected thereby.

The draft will be taken into consideration on or after the 28th March 1935, and any objection or suggestion which may be received by the undersigned by that date will be duly considered:—

Draft Notification.

In exercise of the powers conferred by clause (*b*) of section 62 (*1*) of the Calcutta Police Act, 1866 (Bengal Act IV of 1866), the Commissioner of Police, Calcutta, with the previous sanction of the Governor in Council, hereby makes the following amendment in the rules for the regulation of traffic, etc., in the streets and public places in Calcutta and its suburbs, published under Calcutta Police notification No. 134, dated the 6th January 1932, at pages 37-99, Part I of the *Calcutta Gazette* of the 14th January 1932:—

Amendment.

Under sub-heading "(*b*) One way traffic" in Part II (Special rules for the regulation of traffic) of the said rules—

(*1*) For clause (*a*) of rule 47, as amended by notification No. 3860, dated the 18th May 1933, *substitute* the following clause, namely:—

"(*a*) The entire length of Cotton Street shall be treated as a one-way street from west to east."

L. H. COLSON,
Commissioner of Police, Calcutta.

JUDICIAL DEPARTMENT.

No. 1978A.

Powers.

Faridpur.—No. 1762A.—20th February 1935.—Maulvi Akramuddin, Deputy Magistrate, on probation, Faridpur, is vested with the powers of a Magistrate of the first class.

Murshidabad.—No. 1861A—22nd February 1935.—In exercise of the powers conferred by sub-section (*1*) of section 164 of the Code of Criminal Procedure, 1898 (Act V of 1898), the Governor in Council is pleased to empower Babu Nripendra Kumar Sen, a Sub-Deputy Magistrate, also a Magistrate of the second class at Kandi, in the district of Murshidabad, to record any statement or confession made to him in the course of an investigation under Chapter XIV of the said Code or at any time afterwards before the commencement of enquiry or trial.

E. N. BLANDY,
Chief Secy. to the Govt. of Bengal (offg.).

Appointments and Transfers.

24-Parganas.—No. 1432J. — 18th February 1935.—In exercise of the powers conferred by sections 14 and 15 and the proviso to section 357 of the Code of Criminal Procedure, 1898 (Act V of 1898), the Governor in Council is pleased—

(*a*) to confer upon Babu Surendra Nath Ray the powers of a Magistrate of the first class, in the district of the 24-Parganas, for a period of three years from the date of this notification, in respect to such cases as may be made over to him within the limits of the Sadar subdivision of the said district,

(*b*) to direct that he shall, in addition to sitting singly, sit as a member of the Alipore bench in the said district, and

(*c*) to direct him to take down evidence in the English language.

Howrah.—No. 1495J.—20th February 1935.—In exercise of the powers conferred by sections 14 and 15 of the Code of Criminal Procedure, 1898 (Act V of 1898), the Governor in Council is pleased—

(*a*) to confer upon Babu Radha Kissen Chamria the powers of a Magistrate of the third class, in the district of Howrah, for a period of three years from the 19th March 1935, and

(*b*) to direct him to sit as a member of the Sadar bench in the said district.

Bakarganj.—No. 1497J.—20th February 1935.—In exercise of the power conferred by section 14 of the Code of Criminal Procedure, 1898 (Act V of 1898), the Governor in Council is pleased to confer upon Maulvi Nurul Huda, an Honorary Magistrate of the Patuakhali bench, the powers of a Magistrate of the second class, in the district of Bakarganj, for the

period during which he has been directed to sit as a member of the said bench—

(*a*) in respect to cases brought before the said bench, within the limits of the jurisdiction of the said bench, and

(*b*) in respect to such cases as may be made over to him, when sitting singly, within the limits of the Patuakhali subdivision of the said district.

Hooghly. — No. 1597J. — 21st February 1935.—Babu Syamadas Chatarji, officiating munsif of Arambagh, in the district of Hooghly, is appointed to act as a munsif in the said district, to be ordinarily stationed at Amta, during the absence, on leave, of Babu Surendra Nath Sen, No. II, or until further orders.

Jessore - Dinajpur. — No. 1599J. — 21st February 1935.—Maulvi Abdul Mannan, officiating munsif of Magura, in the district of Jessore, is appointed to act, until further orders, as additional munsif of Balurghat, in the district of Dinajpur.

Nadia.—No. 1601J.—21st February 1935. —Babu Janardan Prosad Mukharji, munsif of Ranaghat, in the district of Nadia, is reappointed to be a munsif in the said district, to be ordinarily stationed at Krishnagar.

24-Parganas.—No. 1612J.—21st February 1935.—In exercise of the powers conferred by sections 14 and 15 of the Code of Criminal Procedure, 1898 (Act V of 1898), the Governor in Council is pleased—

(*a*) to confer upon Mr. J. Leslie the powers of a Magistrate of the third class, in the district of the 24-Parganas, for a period of three years from the 7th March 1935, and

(*b*) to direct him to sit as a member of the Titagarh bench in the said district.

Burdwan. — No. 1630J. — 22nd February 1935.—In exercise of the powers conferred by sections 14 and 15 of the Code of Criminal Procedure, 1898 (Act V of 1898), the Governor in Council is pleased—

(*a*) to confer upon Mr. Angus Graham Mackay the powers of a Magistrate of the third class, in the district of Burdwan, for a period of three years from the date of this notification, and

(*b*) to direct him to sit as a member of the Kulti bench in the said district.

Murshidabad.—No. 1632J.—22nd February 1935.—In exercise of the powers conferred by sections 14 and 15 and the proviso to section 357 of the Code of Criminal Procedure, 1898 (Act V of 1898), the Governor in Council is pleased—

(*a*) to confer upon Maulvi Muhammad Yasin the powers of a Magistrate of the third class, in the district of Murshidabad, for a period of three years from the date of this notification, in respect to such cases as may be made over to him within the limits of the Kandi subdivision in the said district,

(*b*) to direct that he shall, in addition to sitting singly, sit as a member of the Kandi bench in the said district, and

(*c*) to direct him to take down evidence in the English language.

Howrah.—No. 1748J.—23rd February 193[illegible] —In exercise of the power conferred by section 14 of the Code of Criminal Procedure, 1898 (Act V of 1898), the Governor in Council is pleased—

(*a*) to confer upon Mr. Henry David Buist the powers of a Magistrate of the third class, in the district of Howrah, for a period of three years from the date of this notification, in respect to such cases as may be made over to him and in respect of cases under section 34 of Act V of 1861 occurring within the limits of village Sankrail in the said district.

Leave.

Mymensingh.—No. 1609J.—21st February 1935.—Babu Jatindra Kumar Basu, Subordinate Judge of Mymensingh, is allowed leave on average pay for twenty-four days from the 19th February 1935, under rules 81 (*b*) (*ii*) and 82 (*b*) of the Fundamental Rules in extension of the leave already granted to him.

Rangpur.—No. 1729J. — 23rd February 1935.—Babu Sharat Chandra De, Subordinate Judge and Assistant Sessions Judge, Rangpur, is allowed an extension of privilege leave on full pay for eight days from the 15th February 1935, under the amendment to article 271 of the Civil Service Regulations.

Resignation.

Burdwan. — No. 1628J.—22nd February 1935.—The Governor in Council is pleased to accept the resignation tendered by Mr. John Nicholson Kelso of his appointment as an Honorary Magistrate of the Kulti bench in the district of Burdwan.

Promotions and Confirmations.

Noakhali - Mymensingh - Dacca - Chittagong.—No. 1489J.—20th February 1935. — The following promotions and confirmations are sanctioned in the Bengal Civil Service (Judicial) :—

Confirmed in the grade of munsifs.

Babu Bireswar Prasad Bakshi, officiating munsif, Hatiya, Noakhali, with effect from the 27th October 1933, *vice* Babu Jamini Kishor Ray, confirmed as a Subordinate Judge.

He is also confirmed in his present appointment.

Babu Gaya Charan Ray, officiating munsif, Tangail, Mymensingh, with effect from the 24th October 1933, *vice* Babu Jatindra Kumar Basu, confirmed as a Subordinate Judge.

He is also confirmed in his present appointment.

Babu Palas Chandra Pal, officiating munsif, Manikganj, Dacca, with effect from the 30th October 1933, *vice* Babu Jogendra Narayan Ray Chaudhuri, confirmed as a Subordinate Judge.

He is also confirmed in his present appointment.

Maulvi Meerza Zafar Bukht, officiating munsif, South Raojan, Chittagong, with effect from the 6th November 1933, *vice* Babu Subodh Chandra Datta, confirmed as a Subordinate Judge.

He is also confirmed in his present appointment.

Babu Subodh Kumar Neogi, officiating munsif, Netrakona, Mymensingh, with effect from the 19th November 1933, *vice* Babu Abani Prasad Neogi, confirmed as a Subordinate Judge.

He is also confirmed in his present appointment.

NOTIFICATIONS.

Bankura. — No. 1436J. — 18th February 1935.—In exercise of the power conferred by section 73 of the Bengal Village Self-Government Act, 1919 (Bengal Act V of 1919), the Governor in Council is pleased to appoint the following members of the union boards mentioned below, to be, during their term of office as such members, union courts within the jurisdiction of the union boards of which they are, respectively, members for the purposes of that section :—

Vishnupur subdivision, Bankura district.

Sonamukhi police-station.

Dihipara union board.

Babu Sarat Chandra Chatarji.
Babu Priya Nath Koar.
Babu Umapada Chatarji.
Babu Basanta Kumar Ghosh.

Dhulai union board.

Babu Satchidananda Ghosh.
Babu Rasamay Ray.
Babu Arun Chandra Banarji.
Babu Rampada Banarji.

Pearbera union board.

Maulvi Dedar Bux Hazari.
Babu Atul Chandra Kundu.
Munshi Altaf Shaikh.
Babu Abani Mohan Mitra.

Hamirhati union board.

Babu Sarat Chandra Mukharji.
Babu Bagala Bhattacharji.
Babu Anukul Chandra Hazari.
Babu Hrishi Kesh Pal.

Kochdihi union board.

Babu Satish Chandra Ghatak.
Babu Ram Ratan Khan.
Babu Basanta Kumar Chakrabatti.
Babu Jogendra Nath Singha Thakur.

Nabasan union board.

Babu Sashi Bhusan Ray.
Babu Satish Chandra Banarji.
Babu Nitya Kali Chaudhuri.
Babu Nalinakshya Nayak.

Patrasair police-station.

Patrasair union board.

Babu Dhirendra Nath Hazra.
Babu Chandra Sekhar Das.
Babu Kamalanga Bhattacharji.
Babu Charu Chandra Chattarji.

Biur union board.

Babu Bankim Chandra Palit.
Maulvi Lutfar Rahman.
Babu Fakir Chaudhuri.
Babu Tinkari Mandal.

Balsi union board.

Babu Rajani Kanta Mukharji.
Babu Subodh Kumar Mukharji.
Babu Krishna Chandra Koar.
Babu Anadi Prasad Mukharji.

Birsingha union board.

Babu Durga Das Ghosh.
Babu Kishori Mohan Chattarji.
Babu Surendra Nath Banarji.
Babu Ram Nath De.

Indas police-station.

Indas union board.

Babu Sarat Kumar Bose.
Babu Prafulla Chandra Sarkar.
Maulvi Saiyad Hossain Mortaza.
Babu Sarat Chandra Kundu.

Rol union board.

Maulvi Chaudhuri Muhammad Ilias.
Babu Prafulla Kumar Bose.
Babu Dwija Prasanna Sarkar.
Maulvi Khondkar Muhammad Rashed.

Sashpur union board.

Babu Nani Gopal De.
Maulvi Saiyad Mafzul Hossain.
Babu Prabodhananda Banarji
Babu Gobinda Prasad Ghosh.

Dighalgram union board.

Babu Prafulla Kumar Bhattacharji.
Babu Jatindra Nath Jash[illegible]
Babu Kalipada Singha.
Maulvi Badiajzaman Mallik.

This notification will take effect from the date of the first meeting of the reconstituted union boards at which a quorum is present.

Bankura. — No. 1437J. — 18th February 1935.—In exercise of the power conferred by section 65 of the Bengal Village Self-Government Act, 1919 (Bengal Act V of 1919), the Governor in Council is pleased to appoint the following members of the union boards mentioned below, to be, during their term of office as such members, union benches within the jurisdiction of the union boards of which they are, respectively, members for the purposes of that section:—

Vishnupur subdivision, Bankura district.

Sonamukhi police-station.

Dihipara union board.

Babu Sarat Chandra Chatarji.
Babu Priya Nath Koar.
Babu Umapada Chatarji.
Babu Basanta Kumar Ghosh.

Dhulai union board.

Babu Satchidananda Ghosh.
Babu Rasamay Ray.
Babu Arun Chandra Banarji.
Babu Rampada Banarji.

Pearbera union board.

Maulvi Dedar Bux Hazari.
Babu Atul Chandra Kundu.
Munshi Altaf Shaikh.
Babu Abani Mohan Mitra.

Hamirhati union board.

Babu Sarat Chandra Mukharji.
Babu Bagala Bhattacharji.
Babu Anukul Chandra Hazari.
Babu Hrishi Kesh Pal.

Kochdihi union board.

Babu Satish Chandra Ghatak.
Babu Ram Ratan Khan.
Babu Basanta Kumar Chakrabatti.
Babu Jogendra Nath Singha Thakur.

Nabasan union board.

Babu Sashi Bhusan Ray.
Babu Satish Chandra Banarji.
Babu Nitya Kali Chaudhuri.
Babu Nalinakshya Nayak.

Patrasair police-station.

Patrasair union board.

Babu Dhirendra Nath Hazra.
Babu Chandra Sekhar Das.
Babu Kamalanga Bhattacharji.
Babu Charu Chandra Chattarji.

Biur union board.

Babu Bankim Chandra Palit.
Maulvi Lutfar Rahman.
Babu Fakir Chaudhuri.
Babu Tinkari Mandal.

Balsi union board.

Babu Rajani Kanta Mukharji.
Babu Subodh Kumar Mukharji.
Babu Krishna Chandra Koar.
Babu Anadi Prasad Mukharji.

Birsingha union board.

Babu Durga Das Ghosh.
Babu Kishori Mohan Chattarji.
Babu Surendra Nath Banarji.
Babu Ram Nath De.

Indas police-station.

Indas union board.

Babu Sarat Kumar Bose.
Babu Prafulla Chandra Sarkar.
Maulvi Saiyad Hossain Mortaza.
Babu Sarat Chandra Kundu.

Rol union board.

Maulvi Chaudhuri Muhammad Ilias.
Babu Prafulla Kumar Bose.
Babu Dwija Prasanna Sarkar.
Maulvi Khondkar Muhammad Rashed.

Sashpur union board.

Babu Nani Gopal De.
Maulvi Saiyad Mafzul Hossain.
Babu Prabodhananda Banarji.
Babu Gobinda Prasad Ghosh.

Dighalgram union board.

Babu Prafulla Kumar Bhattacharji.
Babu Jatindra Nath Jash.
Babu Kalipada Singha.
Maulvi Badiajzaman Mallik.

This notification will take effect from the date of the first meeting of the reconstituted union boards at which a quorum is present.

Tippera.—No. 1441J.—19th February 1935.—In exercise of the power conferred by section 65 of the Bengal Village Self-Government Act, 1919 (Bengal Act V of 1919), the Governor in Council is pleased to appoint the following members of the Junedpur union board within the Nabinagar police-station in the Brahmanbaria subdivision of the Tippera district, to be, during their term of office as such members, a union bench within the jurisdiction of the said union board for the purposes of that section:—

Babu Sudhir Kumar Das.
Munshi Reasat Ali Chaudhuri.
Babu Durga Prasanna Bhattacharji.

Tippera.—No. 1442J.—19th February 1935.—In exercise of the power conferred by section 73 of the Bengal Village Self-Government Act, 1919 (Bengal Act V of 1919), the Governor in Council is pleased to appoint the following members of the Junedpur union board within the Nabinagar police-station in the Brahmanbaria subdivision of the Tippera district, to be, during their term of office as such members, a union court within the jurisdiction of the said union board for the purposes of that section:—

Babu Sudhir Kumar Das.
Munshi Reasat Ali Chaudhuri.
Babu Durga Prasanna Bhattacharji.

Rajshahi.—No. 1584J.—21st February 1935.—In exercise of the power conferred by section 73 of the Bengal Village Self-Government Act, 1919 (Bengal Act V of 1919), the Governor in Council is pleased to appoint Munshi Md. Nasratulla Mandal, a member of the Manda union board within the Manda police-station in the Naogaon subdivision of the Rajshahi district, to be, during his term of office as such member, a member of the union court within the jurisdiction of the said union board for the purposes of that section, *vice* Munshi Haru Mondal, deceased.

Rajshahi.—No. 1585J. — 21st February 1935.—In exercise of the power conferred by section 65 of the Bengal Village Self-Government Act, 1919 (Bengal Act V of 1919), the Governor in Council is pleased to appoint Munshi Md. Nasratulla Mandal, a member of the Manda union board within the Manda police-station in the Naogaon subdivision of the Rajshahi district, to be, during his term of office as such member, a member of the union bench within the jurisdiction of the said union board for the purposes of that section, *vice* Munshi Haru Mondal, deceased.

T. J. Y. ROXBURGH,
Secy. to the Govt. of Bengal (offg.).

LOCAL SELF-GOVERNMENT DEPARTMENT.

NOTIFICATIONS.

Minister-in-charge: The Hon'ble Sir Bijoy Prasad Singh Roy, Kt.

Khulna.—No. 1529M.—21st February 1935.—In exercise of the power conferred by section 46 (*1*) of the Bengal Municipal Act, 1932 (Bengal Act XV of 1932), the Government of Bengal (Ministry of Local Self-Government) are pleased to appoint Babu Sailendra Nath Mondal to be the Chairman of the Debhatta Municipality in the district of Khulna.

Rangpur.—No. 1541L.S.-G.—22nd February 1935.—In exercise of the power conferred by section 5 of the Bengal Village Self-Government Act, 1919 (Bengal Act V of 1919), and after consideration of the views of the Rangpur district board and the Kurigram local board, the Government of Bengal (Ministry of Local Self-Government) are pleased to direct that each of the following local areas in thana Rowmari in the Kurigram subdivision of the Rangpur district shall be declared a union for the purposes of the Act.

2. In exercise of the power conferred by sub-section (*1*) of section 6 of the said Act, the Government of Bengal (Ministry of Local Self-Government) are pleased to establish union boards for each of the unions hereby declared and to fix nine as the number of members of each union board.

3. In exercise of the power conferred by sub-section (*3*) of section 6 of the said Act, the Government of Bengal (Ministry of Local Self-Government) are pleased to direct that one-third of the number of members of each union board shall be appointed by the District Magistrate on the grounds that such appointment is necessary for the due representation of minorities and of different interest within the union:—

Rangpur district board.

—

Kurigram local board.

Rowmari thana.

Names of mauzas constituting the union with their numbers in the jurisdiction list.

Tapurchar union.

Char Soulmari	... 1
Mianar Charnoutia	... 1
Kazaikata	... 4
Tapur Char	... 6
Kauniar Char	... 5
Datbhanga	... 7

Names of mauzas constituting the union with their numbers in the jurisdiction list.

Boalmari union.

Bagua Bansdaha	... 2
Purar Char	... 9
Boaikmari	... 18
Baraikandi	... 10
Banchar Char	... 11
Taluar Char	... 17
Khanjanmara	... 12
Baladmara	... 13
Jhagrar Char	... 8

Rowmari union.

Faluar Char	... 14
Bandabor	... 15
Jignikandi	... 16
Bausmari	... 20
Saulmari	... 19
Rahumari	... 21
Chuliar Char	... 23
Rahumari Alga	... 22

Jadur Char union.

Kalabari	... 24
Khowar Char	... 25
Jadur Char	... 26
Dhanar Char	... 27
Char Sajai	... 29
Kodailkati	... 30
Sajai	... 31
Komarbhangi	... 28

Rajibpur union.

Madhabpur-Sankarpur	... 32
Rajibpur	... 33
Badarpur	... 34
Char Rajibpur	... 35
Balomari	... 36
Pahartali	... 37
Jauniar Char	... 38

Nadia. — No. 1543M. — 22nd February 1935.—The following draft of a set of by-laws, which has been framed by the Commissioners of the Nabadwip Municipality, in the district of Nadia, under section 245(*a*) and (*b*) of the Bengal Municipal Act, 1932 (Bengal Act XV of 1932), and which the Government of Bengal (Ministry of Local Self-Government) propose to confirm under section 506 of the Act, is published for the information of persons likely to be affected thereby.

2. The draft will be taken into consideration on the 10th May 1935, and any objection or suggestion received by the undersigned through the District Magistrate and the Divisional Commissioner before that date will be duly considered:—

Draft by-laws.

By-laws regarding the prohibition and regulation of traffic.

Definition.

1. In these by-laws "cattle" means cattle as defined in section 3 of the Cattle Trespass Act, 1871 (I of 1871).

Penalties.

2. *Fines.*—The penalty for the infringement of any of these by-laws shall be—

(*a*) a fine not exceeding the sum stated at the foot of the by-law,

(*b*) in the case of a second or subsequent conviction for a similar offence a fine not exceeding the sum (if any) stated in that behalf at the foot of the by-law, and

(*c*) in the case of a continuing offence, a further fine not exceeding the sum (if any) stated at the foot of the by-law as the daily fine, which daily fine may be imposed for each day after written notice of the offence from the Commissioners.

Regulation of traffic on public streets.

3. *Youthful drivers.*—No owner of any carriage or cart shall allow it to be driven on any public street by a driver under fourteen years of age.

Fine, Rs. 10.

4. *Driving more than one carriage or cart.*—No driver shall drive or have in his charge on any public street more than one carriage or cart, except in the case of two carts, the hinder one of which is severely fastened to the preceding cart.

Fine, Rs. 10.

5. *Standing vehicles.*—No person shall keep standing on any public street any vehicle in such a manner as to cause inconvenience to the public, for any time longer than may reasonably be required for loading or unloading or for taking up or setting down passengers.

Fine, Rs. 10; on a second or subsequent conviction, Rs. 50.

6. *Charge of carriage or cart.*—No person shall leave any carriage or cart on any public street without a person in charge thereof.

Fine, Rs. 10; on a second or subsequent conviction, Rs. 50.

7. *Rule of the road.*—Any person driving a carriage or cart, or riding a bicycle, or driving or riding an animal, or carrying a palanquin, on any public street, shall keep to his left when he passes a vehicle coming from the opposite direction or when any vehicle overtakes him, and shall keep to his right when overtaking any vehicle.

Fine, Rs. 10.

8. *Lights.*—No person shall drive any of the undermentioned vehicles or animals, or convey any palanquin, on any public street, between half-an-hour after sunset and half-an-hour before sunrise, unless lights are provided as follows:—

(*a*) every carriage must carry two conspicuous lights, one on each side,

(*b*) every cart must carry one conspicuous light,

(*c*) every elephant, camel or palanquin must be accompanied by one conspicuous light,

(*d*) every cycle must carry one conspicuous light in front.

Provided that this by-law shall not apply on nights of full moon or on the four nights before and after full moon, if and when the moon is clearly visible.

Fine, Rs. 50.

9. *Signals on motors and cycles.*—No person shall drive any motor-car or ride any motor-cycle or any tricycle or bicycle, on any public street, unless it has attached to it a bell, horn or other suitable signal in good order.

Fine, Rs. 50.

10. *Maximum load for carts.*—No cart shall, without the general or special permission of the Commissioners, carry on any public street a load in excess of twenty maunds.

Fine, Rs. 10.

11. *Vehicles laden with girders, etc.*—No person shall drive upon a public street any vehicle laden with iron girders, rails, beams, bullas, bamboos, planks or other materials of a similar character which exceed twelve feet in length, unless the vehicle be accompanied by another person and, be loaded in such a way that no portion of the said materials touches the ground.

Fine, Rs. 10.

12. *Vehicles laden with bricks, stones, etc.*—No person shall drive upon a public street any vehicle laden with bricks, stones or other materials of a similar character, unless such materials be so secured that they cannot fall on to the street.

Fine, Rs. 10.

13. *Animal laden with bamboos or timber.*—No person shall convey on any public street bamboos or timber placed on the back of any animal in such a way that any portion of such bamboos or timber touches the ground.

Fine, Rs. 10.

14. *Taking elephants or camels along a public street.*—No person shall, without the general or special permission of the Commissioners, take any elephant or camel along any public street.

Fine, Rs. 50.

15. *Taking an elephant over a bridge.*—No person shall allow any elephant in his charge to go over any bridge on any public street unless the bridge be constructed of arched masonry steel or ferro-concrete or similar durable material.

Fine, Rs. 50.

16. *Loaded pack-animals.* — No person shall drive upon a public street, at the same time, more than two loaded pack-animals.

Fine, Rs. 10.

17. *Foals.*—No person riding or driving a mare on any public street shall allow a foal to accompany the mare unless it is secured.

Fine, Rs. 10.

18. *Driving cart in centre of a public street.*—No person shall drive a cart on the centre of any public street on which cart tracks are provided.

Fine, Rs. 10.

19. *Sitting or sleeping.*—No person shall sit or sleep on any public street so as to obstruct traffic.

Fine, Rs. 10.

Regulation of traffic on foot-paths.

20. *Driving or riding on foot-path.*—No person shall wilfully drive or rise any vehicle or cattle on any foot-path set apart for the use of foot-passengers.

Fine, Rs. 10.

Prevention of obstructions, encroachments or excavations on or near public streets, ghats or ferries.

21. *Abandoning or letting loose cattle.*—No person shall abandon or let loose or negligently allow to get loose, any cattle, on any public street.

Fine, Rs. 10.

22. *Children playing or wandering.*—No parent or guardian of any child below the age of seven years shall allow such child to play or wander about on any public street so as to obstruct traffic.

Fine, Rs. 10.

23. *Depositing articles.*—No person shall, without the general or special permission of the Commissioners, deposit any articles on any public street, except for a temporary purpose, or use any public street as a place for keeping any vehicle or cattle, or for washing any article, or for any other private purpose:

Provided that, during the months of April, May and June, between the hours of 10 p.m. and 5 a.m., *khatias* may be laid on the side of a public street in such a manner as not to cause obstruction or danger to persons using the public street.

Fine, Rs. 10.

24. *Planting trees.*—No person shall plant a tree on any public street without the general or special permission of the Commissioners.

Fine, Rs. 10.

25. *Excavations and enclosures.*—No person shall, without the general or special permission of the Commissioners, make any excavation on any public street or on or near any ghat or public ferry or enclose any such street or any part thereof.

Fine, Rs. 10; daily fine, Rs. 2.

26. *Removing turf or cutting grass.*—No person shall, without the general or special permission of the Commissioners, remove turf or cut grass from any public street or the slopes thereof.

Fine, Rs. 10.

27. *Discharge of water.*—No person shall affix or cause to be affixed to any building owned or occupied by him any gutter, spout or other thing intended for the conveyance and discharge of water, or shall leave in any such building any opening for the discharge of water in such a way that the water discharged therefrom is thrown or falls upon a public street, except through a down pipe or other suitable contrivance reaching to the level of the public street.

Fine, Rs. 10; daily fine, Rs. 2.

28. *Breaking in horses.*—No person shall break in horses on any public street not set apart for that purpose.

Fine, Rs. 10; on a second or subsequent conviction, Rs. 50.

29. *Flying kites.*—No person shall fly a kite on any public street, or in such a way that it may fall on any public street.

Fine, Rs. 10.

30. *Playing games.*—No person shall play any game on any public street.

Fine, Rs. 10.

31. *Throwing stones or missiles.*—No person shall throw or discharge any stone or missile on or near any public street.

Fine, Rs. 10.

32. *Driving across a drain.*—No person shall drive any vehicle across a public drain in or near any public street so as to cause damage to such drain.

Fine, Rs. 10.

33. *Barbed wire.*—No owner or occupier of land abutting on any public street shall fence such land with barbed wire.

Fine, Rs. 10; daily fine, Rs. 2.

34. *Dust-bins.*—No person shall—

(*a*) place any burning material in any municipal dust-bin on or near a public street, or

(*b*) burn in any such dust-bin any paper, leaves, grass, wood or other material.

Fine, Rs. 10.

35. *Closed public street.*—No person shall take or drive any motor vehicle, carriage or cart on a public street or part of a street which is closed by order of the Commissioners to all or any specified description of wheeled traffic or displace any barrier or fence or notice erected for the purpose of closing such public street or part thereof.

Fine, Rs. 10.

Regulation of the use or occupation of public streets or places for sale of articles, etc., and provision for the levy of fees for such use or occupation.

36. *Exposing articles for sale.*—Without the general or special permission of the Commissioners which may, if they so direct, be subject to the payment of fees according to a scale prescribed by them at a meeting, no person shall use or occupy any public street or any other public place for the sale of any article or for the exercise of any calling or for setting up any booth or stall.

Fine, Rs. 10; on a second or subsequent conviction, Rs. 50.

Jalpaiguri.—No. 1566M.—22nd February, 1935.—The following draft of a set of by-laws, which has been framed by the Commissioners of the Jalpaiguri Municipality, in the district of Jalpaiguri, under section 328 of the Bengal Municipal Act, 1932 (Bengal Act XV of 1932), and which the Government of Bengal (Ministry of Local Self-Government) propose to confirm under section 506 of the Act, is published for the information of persons likely to be affected thereby.

2. The draft will be taken into consideration on the 1st May 1935, and any objection or suggestion received by the undersigned through the District Magistrate and the Divisional Commissioner before that date will be duly considered:—

Draft by-laws.

By-laws regulating construction of buildings in less advanced municipalities (section 328 of the Bengal Municipal Act, 1932).

1. *Particulars to accompany application of erecting or re-erecting a masonry building.*—Every person who intends to erect or re-erect a masonry building shall forward to the Chairman an application with a plan and specification of the building and a site-plan of the land on which he proposes to make the erection or re-erection. In the said application he shall give a description of the building and its dimensions, and shall indicate the position of the site, the number assigned to it in the assessment book, its dimensions and such other particulars as may be required by the commissioners.

2. *Floor of buildings used for manufacture and storage of article for human consumption.*—The floor of every masonry building intended to be used for the manufacture or storage of articles for human consumption, shall be constructed of some impermeable material approved by the commissioners.

3. *Building over municipal drain.*—A masonry building shall not extend over any municipal drain.

4. *Level of floor.*—The lowest floor of every masonry building erected or re-erected from the ground shall be constructed at such level as will admit of the construction of a drain sufficient for the effectual drainage of the building, and placed at such level as will admit of the drainage being led into an existing or projected municipal drain.

5. *Foundation.*—Except with the sanction of the commissioners, the foundation of a masonry building shall rest on natural ground.

6. *Plinth.*—The plinth of a masonry building shall be at least two feet above the level of the centre of the nearest street: provided that the plinth of stables and cow-sheds need not be more than one foot above such level.

7. *Walls in building exceeding one story in height.*—(*1*) If a masonry building exceeds one story in height—

(*a*) no part of any wall, other than a cornice or a moulding, shall overhang any part of a well underneath it; and

(*b*) every wall shall be of such thickness as the commissioners may consider necessary to ensure safety, regard being had to the height of the building, the materials of which it is constructed and the purpose for which it is intended.

(*2*) Nothing contained in sub-rule (*1*) shall prevent the erection of a second story upon an existing masonry building, the walls of which are certified by the commissioners as being able to bear the load proposed to be put upon them.

8. *Interior courtyards and open spaces to be raised.*—Every interior courtyard and every open space shall be raised at least one foot above the level of the centre of the nearest street, so as to admit of easy drainage.

9. *Height.*—No masonry building exceeding fifty feet in height shall be erected without the special permission of the commissioners.

10. *Site-plan.*—The site-plan sent to the Chairman under rule 1 shall be drawn to a scale of not less than one-fiftieth of an inch to a foot, shall be set in duplicate and shall show—

(*a*) the boundaries of the site and of any contiguous land belonging to the owner thereof;

(*b*) the position, form and dimensions of privies, urinals, drains, cesspools, stables, cattle-sheds, cow-sheds, wells and other appurtenances of the building;

(*c*) the space which it is proposed to leave about the building to secure the free circulation of air, the admission of light and access for scavengering purposes; and

(*d*) such other particulars as may be required by the commissioners.

11. *Building-plan.*—The plan of the building (and the elevations and sections, whenever necessary), sent to the commissioners under rule 1, shall be neatly and accurately drawn to a scale of not less than one-eighth of an inch to a foot, shall be sent in duplicate and shall show—

(*a*) the depth and width of the foundation of the building;

(*b*) the level of the lowest floor of the building; and

(*c*) the level of all courtyards and open spaces in the building or premises and the plinth level of the building with reference to the level of the centre of the nearest street.

12. *Specifications.*—The specifications sent to the Chairman with any such plan shall comprise full information as to the following particulars:—

(*i*) the manner in which roof and house drainage and the surface drainage of the land will be disposed of;

(*ii*) the means of access to service-privies that will be available to scavengers;

(*iii*) the means of ingress and egress if the building is intended to be used as a dwelling house for two or more families or as a place for carrying on any trade or business in which more than twenty people may be employed, or as a place of public resort; and

(*iv*) such other particulars as may be required by the Commissioners.

13. *Signature of plans, elevations and sections.*—The plan, elevation and sections referred to in rules 10 and 11 shall be signed clearly and in a prominent place by the owner of the building, or if he is illiterate, by any other person authorised by him to sign in his behalf, in which case they shall be marked with the owner's thumb-impression.

14. *Chairman to sign approved plans.*—The Chairman shall sign all passed plans in token of the approval of the commissioners.

15. *Restriction on application of certain rules.*—Rules 1, 10, 11, 12, 13 and 14 shall not be applied in the case of any alteration of, or addition to, a masonry building, unless one or more of the following works is undertaken, namely:—

(*a*) the construction of a roof or an external or party-wall;

(*b*) any repairs to the building which involve the reconstruction of a masonry wall after the same has been entirely or in a great part demolished;

(*c*) the closing of any door or window in an external wall;

(*d*) the construction or removal of an internal wall or partition;

(*e*) any other alteration of the internal arrangements of a building which affects its courtyard or courtyards, or its drainage, ventilation or sanitary arrangements or which affects its security;

(*f*) the addition of any building, room, outhouse or other structure;

(*g*) the roofing of any space adjoining a wall or building; and

(*h*) the alteration of a building for the purpose of effecting a partition.

16. The penalty for the infringement of any of the by-law Nos. 2 to 9 shall be—

(*a*) a fine not exceeding Rs. 50, and

(*b*) in the case of a continuing infringement, a daily fine not exceeding Rs. 5 for each day after written notice of the offence is served by the commissioners.

Nadia.—No. 1568M.—22nd February 1935.—The following draft of a set of by-laws, which has been framed by the Commissioners of the Chakdah Municipality, in the district of Nadia, under section 328 of the Bengal Municipal Act, 1932 (Bengal Act XV of 1932), and which the Government of Bengal (Ministry of Local Self-Government) propose to confirm under section 506 of the Act, is published for the information of persons likely to be affected thereby.

2. The draft will be taken into consideration on the 8th May 1935, and any objection or suggestion received by the undersigned through the District Magistrate and the Divisional Commissioner before that date will be duly considered:—

Draft by-laws.

By-laws regulating construction of buildings.

1. Every person who intends to erect or re-erect a masonry building shall forward to the Chairman an application with a plan and specification of the building and a site-plan of the land on which he proposes to make the erection or re-erection. In the said application he shall give a description of the building and its dimensions and shall indicate the position of the site the number assigned to it in the assessment book, its dimensions and such other particulars as may be required by the commissioners.

2. The floor of every masonry building intended to be used for the manufacture or storage of articles for human consumption, shall be constructed of some impermeable material approved by the commissioners.

3. A masonry building shall not extend over any municipal drain.

4. The lowest floor of every masonry building erected or re-erected from the ground shall be constructed at such level as will admit of the construction of a drain sufficient for the effectual drainage of the building and placed at such level as will admit of the drainage being led into an existing or projected municipal drain.

5. Except with the sanction of the commissioners, the foundation of a masonry building shall rest on natural ground.

6. The plinth of a masonry building shall be at least two feet above the level of the centre of the nearest street: provided that the plinth of stables and cow-sheds need not be more than one foot above such level

7. (*1*) If a masonry building exceeds one storey in height—

(*a*) no part of any wall, other than a cornice or a moulding, shall overhang any part of a wall underneath it; and

(*b*) every wall shall be of such thickness as the commissioners may consider necessary to ensure safety, regard being had to the height of the building, the material of which it is constructed and the purpose for which it is intended.

(2) Nothing contained in sub-rule (*1*) shall prevent the erection of a second storey upon an existing masonry buildings, the walls of which are certified by the commissioners as being able to bear the load proposed to be put upon them.

8. Every interior courtyard and every open space shall be raised at least one foot above the level of the centre of the nearest street, so as to admit of easy drainage.

9. No masonry building exceeding fifty feet in height, shall be erected without the special permission of the commissioners.

10. The site plan sent to the Chairman under rule 1 shall be drawn to a scale of not less than one-fiftieth of an inch to a foot, shall be sent in duplicate and shall show—

(*a*) the boundaries of the site and of any contiguous land belonging to the owner thereof;

(*b*) the position, form and dimensions of privies, urinals, drains, cesspools, stables, cattle-sheds, cow-sheds, wells and other appurtenances of the building;

(*c*) the space which it is proposed to leave about the building to secure the free circulation of air; the admission of light and access for scavengering purposes; and

(*d*) such other particulars as may be required by the commissioners.

11. The plan of the building (and the elevations and sections, whenever necessary), sent to the commissioners under rule 1 shall be neatly and accurately drawn to a scale of not less than one-eighth of an inch to a foot, shall be sent in duplicate and shall show—

(*a*) the depth and width of the foundation of the building:

(*b*) the level of the lowest floor of the building; and

(*c*) the level of all courtyards and open spaces in the building or premises and the plinth level of the building with reference to the level of the centre of the nearest street.

12. The specifications sent to the Chairman with any such plan shall comprise full information as to the following particulars:—

(*i*) the manner in which roof and house drainage and the surface drainage of the land will be disposed of;

(*ii*) the means of access to service-privies that will be available to scavengers;

(*iii*) the means of ingress and egress if the building is intended to be used as a dwelling house for two or more families or as a place for carrying on any trade or business in which more than twenty people may be employed, or as a place of public resort; and

(*iv*) such other particulars as may be required by the commissioners.

13. The plan, elevation and sections referred to in rules 10 and 11 shall be signed clearly and in a prominent place by the owner of the building or if he is illiterate, by any other person authorised by him to sign in this behalf in which case they shall be marked with the owner's thumb-impression.

14. The Chairman shall sign all passed plans in token of the approval of the commissioners.

15. Rules 1, 10, 11, 12, 13 and 14 shall not be applied in the case of any alteration of or addition to a masonry building, unless one or more of the following works is undertaken, namely:—

(*a*) the construction of a roof or an external or party wall;

(*b*) any repairs to the building which involve the reconstruction of a masonry wall after the same has been entirely or in at great part demolished;

(*c*) the closing of any door or window in an external wall;

(*d*) the construction or removal of an internal wall or partition;

(*e*) any other alteration of the internal arrangements of a building which affects its courtyard or courtyards, or its drainage, ventilation or sanitary arrangements or which affects its security;

(*f*) the addition of any building, room, outhouse or other structure;

(*g*) the roofing of any space adjoining a wall or building; and

(*h*) the alteration of a building for the purpose of effecting a partition.

16. The penalty for the infringement of any of the by-law Nos. 2 to 9 shall be—

(*a*) a fine not exceeding Rs. 50, and

(*b*) in the case of a continuing infringement, a daily fine not exceeding Rs. 5 for each day after written notice of the offence is served by the commissioners.

24-Parganas.—No. 1570M.—22nd February 1935.—The following draft of a set of by-laws, which has been framed by the Commissioners of the Dum Dum Municipality, in the district of 24-Parganas, under section 417 of the Bengal Municipal Act, 1932 (Bengal Act XV of 1932), and which the Government of Bengal (Ministry of Local Self-Government) propose to confirm under section 506 of the Act, is published for the information of persons likely to be affected thereby.

2. The draft will be taken into consideration on the 10th May 1935, and any objection or suggestion received by the undersigned through the District Magistrate and the Divisional Commissioner before that date will be duly considered:—

Draft by-laws.

By-laws regarding standardization of weights and measures (section 417 of the Bengal Municipal Act, 1932).

1. In these by-laws the word "vendor" includes a shop-keeper, stall-holder, squatter or other salesman in any market or in any other place within the municipality.

2. All vendors within the municipality shall use—

(*i*) Government standard weights, that is to say, a *maund* consisting of forty *seers*, a *seer* consisting of eighty *tolas* and a *tola* consisting of one hundred and eighty *grains;* and

(*ii*) a standard cubit consisting of eighteen inches for the measure of commodities other than land.

3. The commissioners shall require the superintendents of the municipal markets or any other officers duly authorised by them in that behalf, and may require the owner, manager or other person in charge of a private market to keep in their custody standards of weights and measures conforming with the standard prescribed in by-law 2 for the purpose of verifying the weights and measures used by any vendor for the sale of articles in any market or in any other place. Such superintendents or other officers duly authorized by the commissioners shall keep in their custody a die for the purpose of stamping weights and measures, which have been duly verified in the manner provided in by-law 4.

4. The superintendent of a municipal market or any other officer duly authorized by the commissioners in that behalf, shall, not less than once in every three months, test and verify the weights and measures used by each vendor in every market or other place by comparison with the aforesaid standards and shall also similarly test and verify every weight or measures that may be brought to him by any person at his office for the purpose of verification; and if, in either case, he finds the same to be correct, shall stamp it with the die mentioned in by-law 3 by way of verification on payment of such fee, *not exceeding annas four* in each case as the commissioners may from time to time direct:

Provided that weights and measures once stamped shall not be stamped with the die a second time unless the stamp has become faint or obliterated.

Mymensingh.—No. 1578M.—22nd February 1935.—In exercise of the power conferred by section 58 (*2*) of the Bengal Municipal Act, 1932 (Bengal Act XV of 1932), the Government of Bengal (Ministry of Local Self-Government) are pleased to appoint the Government Assistant Surgeon of Tangail to be an *ex-officio* Commissioner of the Tangail Municipality in the district of Mymensingh, *vice* Dr. Umesh Chandra Majumdar, resigned.

Birbhum.—No. 1580M. — 23rd February 1935.—In exercise of the power conferred by clause (*c*) of sub-section (*1*) of section 6 of the Bengal Municipal Act, 1932 (Bengal Act XV of 1932), the Government of Bengal (Ministry of Local Self-Government) are pleased to declare their intention, after consideration of the views of the Commissioners of the Suri Municipality at a meeting, to exclude from the Suri Municipality the area comprised within the boundaries noted below:—

Boundaries.

North—The southern edge of the Gobra road running eastwards for a distance of 450 feet from a point 150 feet east of the centre line of the Kendua Road at its junction with the Gobra Road.

South—The portion of the northern boundary of mauza Hatzanbazar which lies between its intersections with the eastern and western boundaries (as set out below) of this area.

East—A line drawn parallel to and 600 feet east of the centre line of the Kendua Road from a point on the southern edge of the Gobra Road to meet the northern boundary of mauza Hatzanbazar.

West—A line drawn parallel to and 150 feet east of the centre line of the Kendua Road from a point on the southern edge of the Gobra Road to meet the northern boundary of mauza Hatzanbazar.

2. A map showing the area proposed to be excluded is available for inspection at the office of the Suri Municipality during office hours.

3. Any objection to the proposal in writing, which may be received by the undersigned from any inhabitant of the said area or any ratepayer of the said municipality through the District Magistrate within three months from the date of publication of this notification, will be taken into consideration.

No. 1613L.S.-G.—25th February 1935. — The following draft of an amendment, which, in exercise of the power conferred by clauses (*r*) and (*t*) of section 138 of the Bengal Local Self-Government Act of 1885 (Bengal Act III of 1885), the Government of Bengal (Ministry of Local Self-Government) propose to make in the rules published with notification No. 2158L.S.-G., dated the 5th September 1918, as subsequently amended, is published as required by section 143 of that Act for the information of persons likely to be affected thereby.

2. The draft will be taken into consideration on or after the 1st May 1935, and any objection or suggestion with respect thereto, which may be received by the undersigned before that date, will be duly considered:—

Draft amendment.

For rule 156, *substitute* the following:—

"156. The District Fund except the Special Fund formed by the district board under clause (*c*) of section 35A of the Act, shall be lodged with the Collector of the district, who shall keep a separate account thereof. The Special Fund under clause (*c*) of section 35A of the Act, shall be kept in the Imperial Bank of India and the balance not required for immediate use shall be invested in Government securities or kept in fixed deposits in the Imperial Bank of India. Donations which private persons give to the district board for objects of legitimate expenditure on condition that they are to be placed in fixed deposit in a bank or invested in securities, may be so placed in deposit or invested by the district board."

Medical.

Minister-in-charge: The Hon'ble Sir Bijoy Prasad Singh Roy, Kt.

Dacca. — No. 774Medl. — 15th February 1935.—Dr. Nitya Ranjan Gupta, Teacher of Pathology and Bacteriology, Dacca Medical School, was granted leave on average pay for the period from the 5th to the 23rd November 1934, under rules 81 (*b*) (*ii*) and 82 (*b*) of the Fundamental Rules.

Calcutta. — No. 795Medl.—16th February 1935.—Dr. Jitendra Nath Maitra, M.D., Teacher of Pathology, Campbell Medical School, Calcutta, is granted leave on average pay for one month, under rules 81 (*b*) (*ii*) and 82 (*b*) of the Fundamental Rules, with effect from the 9th January 1935.

Burdwan.—No. 807Medl.—19th February 1935.—Dr. Surendra Mohan Lahiri, Teacher of Chemistry, Physics and Medical Jurisprudence of the Ronaldshay Medical School, Burdwan, is allowed leave on average pay for two months, under rules 81(*b*) (*ii*) and 82(*b*) of the Fundamental Rules, with effect from the date of relief.

Howrah-Burdwan. — No. 808Medl. — 19th February 1935.—Temporary Assistant Surgeon Dr. Jitendra Mohan Chakravertty of the Uluberia subdivision and dispensary in the district of Howrah, on relief, is appointed to act as Teacher of Chemistry, Physics and Medical Jurisprudence of the Ronaldshay Medical School, Burdwan, *vice* Dr. Surendra Mohan Lahiri, on leave.

Dacca. — No. 855Medl. — 21st February 1935.—Dr. Paresh Chandra Chakravartty, on general duty at the Mitford Hospital, Dacca, was allowed leave on average pay for the period from the 12th October to the 9th November 1934, under rule 81 (*b*) (*ii*) of the Fundamental Rules.

This cancels notification No. 3478Medl., dated the 8th November 1934.

G. S. DUTT,
Secy. to the Govt. of Bengal.

EDUCATION DEPARTMENT.

NOTIFICATIONS.

Darjeeling.—No. 761Edn.—23rd February 1935.—Mr. J. C. Vyse is appointed temporarily to act, until further orders, as Middle School Teacher, Victoria Boys' School, Kurseong, with effect from the date of the re-opening of the school after the current winter vacation, or any subsequent date on which he joins the appointment, *vice* Mr. C. A. Price, on deputation.

Darjeeling.—No. 762Edn.—23rd February 1935.—Mr. W. D. Calderia is appointed temporarily to act as Middle School Master, Victoria Boys' School, Kurseong, with effect from the 10th March 1935, or any subsequent date on which he joins the appointment, *vice* Mr. H. M. Ballie, on leave, or until further orders.

No. 775Edn.—25th February 1935. — In exercise of the power conferred by section 6, sub-section (*1*), clause (*c*), and section 10 of the Indian Universities Act, 1904 (VIII of 1904), as amended by the Calcutta University Act, 1921 (VII of 1921), His Excellency the Chancellor of the Calcutta University is pleased to re-nominate Khan Bahadur Mr. Muhammad Maula Baksh, B.A., Assistant Director of Public Instruction for Muhammadan Education, Bengal, to be an Ordinary Fellow of the University.

No. 778Edn.—25th February 1935. — In exercise of the power conferred by section 6, sub-section (*1*), clause (*c*), and section 10 of the Indian Universities Act, 1904 (VIII of 1904), as amended by the Calcutta University Act, 1921 (VII of 1921), His Excellency the Chancellor of the Calcutta University is pleased to nominate Mr. H. A. Stark to be an Ordinary Fellow of the University.

Minister-in-charge: The Hon'ble Khan Bahadur M. Azizul Haque.

Rajshahi. — No. 733Edn. — 21st February 1935.—Maulvi Abu Hena, officiating Professor of English, Rajshahi College, is confirmed in the appointment and in the Bengal Educational Service, with effect from the 25th January 1932, *vice* Babu Ramapada Mazumdar, transferred.

Hooghly-Nadia.—No. 754Edn. — 23rd February 1935.—Dr. Subimal Chandra Ghoshal, Demonstrator, Hooghly College, is appointed to the Bengal Educational Service as Professor of Chemistry, Krishnagar College, with effect from the date on which he joins the appointment.

Rajshahi Divn.—No. 757Edn.—23rd February 1935.—Maulvi Najmul Hosain Choudhuri, Assistant Inspector of Schools for Muhammadan Education, Rajshahi Division, is confirmed in the Bengal Educational Service, with effect from the 16th December 1931, *vice* Maulvi Abdul Halim, retired.

Chittagong Divn.—No. 758Edn.—23rd February 1935.—Maulvi Muhammad Basheer Hosain, officiating Assistant Inspector of Schools for Muhammadan Education, Chittagong Division, is appointed to the Bengal Educational Service, with effect from the 3rd June 1932, *vice* Khan Sahib Maulvi Shamsuddin Ahmed, retired.

Chittagong.—No. 781Edn.—25th February 1935.—Babu Mahima Ranjan Barua, Professor, Chittagong College, is allowed, under rule 81(*d*) of the Fundamental Rules, leave on half average pay for the period from the 29th June 1935 up to the day preceding the commencement of the Puja vacation of 1935, and again from the day succeeding the termination of the Puja vacation of 1935 to the day preceding the commencement of the summer vacation of 1936, with the summer vacations of 1935 and 1936 prefixed and affixed, respectively, to the leave and the Puja vacation of 1935 included between the two periods of the leave, under rule 82 (*d*) of the same rules.

Registration.

NOTIFICATIONS.

Minister-in-charge: The Hon'ble Khan Bahadur M. Azizul Haque.

Howrah.—No. 192Regn.—18th February 1935.—In exercise of the power conferred by section 3 of the Bengal Muhammadan Marriages and Divorces Registration Act, 1876 (Bengal Act I of 1876), the Government of Bengal (Ministry of Education) are pleased to appoint Maulvi Samiullah temporarily to be a Muhammadan Registrar within the police-stations of Howrah, Bantra, Golabari, Sibpur, Bally and Malipanchghora, in the district of Howrah, during the absence, on leave, of Maulvi Syed Abul Basher Muhammad Bashiruddin, or until further orders.

Howrah.—No. 193Regn.—18th February 1935.—In exercise of the power conferred by section 2 of the Kazis' Act, 1880 (Act XII of 1880), the Government of Bengal (Ministry of Education) are pleased to appoint Maulvi Samiullah temporarily to be the Kazi for the celebration of marriages and the performance of other rites and ceremonies within the police-stations of Howrah, Bantra, Golabari, Sibpur, Bally and Malipanchghora, in the district of Howrah, during the absence, on leave, of Maulvi Syed Abul Basher Muhammad Bashiruddin, or until further orders.

Dacca.—No. 200Regn.—23rd February 1935.—In exercise of the power conferred by section 3 of the Bengal Muhammadan Marriages and Divorces Registration Act, 1876 (Bengal Act I of 1876), the Government of Bengal (Ministry of Education) are pleased to appoint Maulvi Syed Abdul Basir temporarily to be a Muhammadan Registrar within the police-stations of Nawabganj and Dohar, in the district of Dacca, during the absence, on leave, of Maulvi Saiyid Abdus Samad, or until further orders.

Dacca.—No. 201Regn.—23rd February 1935.—In exercise of the power conferred by section 2 of the Kazis' Act, 1880 (Act XII of 1880), the Government of Bengal (Ministry of Education) are pleased to appoint Maulvi Syed Abdul Basir temporarily to be the Kazi for the celebration of marriages and the performance of other rites and ceremonies within the police-stations of Nawabganj and Dohar, in the district of Dacca, during the absence, on leave, of Maulvi Saiyid Abdus Samad, or until further orders.

H. R. WILKINSON,
Secy. to the Govt. of Bengal.

Orders by the Director of Public Instruction, Bengal.

Bengal Educational Service.

Dinajpur.—No. 10B.—31st January 1935.—Maulvi Gholam Rabbani Ahmed, District Inspector of Schools, Dinajpur, in the Bengal Educational Service, is declared to have been on privilege leave on full pay for twenty-one days from 9th November 1934, under article 260 of the Civil Service Regulations.

Calcutta.—No. 11B.—15th February 1935.—Babu Karunamay Khastgir, Professor of Mathematics, Presidency College, in the Bengal Educational Service, is declared to have been on leave on average pay for the period from 25th January 1935 to 7th February 1935, under rules 81 (*b*) (*ii*) and 82 (*b*) of the Fundamental Rules.

2. He was permitted to suffix to the leave the gazetted holidays on the 8th, 9th and Sunday, the 10th February 1935, as the conditions prescribed in Subsidiary Rules 206 to 208 were fulfilled.

Chittagong Divn.—No. 12B.—16th February 1935.—Khan Sahib Maulvi Mirza Abu Jaafar, officiating Inspector of Schools, Chittagong Division, in the Bengal Educational Service, is granted leave on average pay for eighteen days from 1st April 1935, under Fundamental Rule 81 (*b*) (*ii*).

2. He is permitted to suffix to his leave the Easter holidays extending from the 19th to 22nd April 1935, provided the conditions prescribed in Subsidiary Rules 206 to 208 are fulfilled.

J. M. BOTTOMLEY,
Director of Public Instruction, Bengal.

Orders by the Inspector-General of Registration, Bengal.

Bakarganj.—No. 57.—19th February 1935.—Babu Kishori Mohan Karmakar, Joint Sub-Registrar of Barhanuddin Havildar's Hat at Tazimuddin, in the district of Bakarganj, is allowed leave on average pay for sixty days, under rule 81 (*b*) (*ii*) of the Fundamental Rules, with effect from the date on which he may be relieved.

Bakarganj.—No. 58.—19th February 1935.—Maulvi Md. Velayet Ali Khan, Sub-Registrar attached to Sadar, in the district of Bakarganj, is appointed to act as Joint Sub-Registrar of Barhanuddin Havildar's Hat at Tazimuddin, in the same district, with effect from the date on which he joins the appointment, *vice* Babu Kishori Mohan Karmakar, Sub-Registrar, on leave, or until further orders.

Burdwan. — No. 59. — 21st February 1935.—Babu Jatindra Chandra Ghosh, Sub-Registrar of Raniganj, in the district of Burdwan, is appointed to be Sub-Registrar of Memari in the same district.

Burdwan.—No. 60.—21st February 1935. — Lala Prafulla Prakash Nandy, Sub-Registrar attached to Burdwan, is appointed to act until further orders as Sub-Registrar of Raniganj in the same district, with effect from the date on which he joins the appointment, *vice* Babu Jatindra Chandra Ghosh, transferred to Memari in the same district.

Burdwan-Jessore. — No. 61. — 21st February 1935.—Babu Bimalapada Mukherji, Sub-Registrar of Memari, in the district of Burdwan, is appointed to be Sub-Registrar of Jhenidah, in the district of Jessore.

Jessore.—No. 62.—21st February 1935. — Babu Kanti Chandra Pal, Sub-Registrar of Jhenidah, in the district of Jessore, is appointed to be Sub-Registrar of Bongaon in the same district.

Tippera.—No. 63.—21st February 1935.—Babu Dinesh Chandra Chanda, Sub-Registrar of Chaudagram, in the district of Tippera, is allowed leave on average pay for twenty-one days, under rule 81 (*b*) (*ii*) of the Fundamental Rules, with effect from the 1st February 1935.

Tippera.—No. 64.—21st February 1935.—Maulvi A. B. Sharfuddin Ahmad, Sub-Registrar attached to Comilla, in the district of Tippera, is appointed to act as Sub-Registrar of Chaudagram in the same district, with effect from the 1st February 1935, *vice* Babu Dinesh Chandra Chanda, Sub-Registrar, on leave, or until further orders.

Bakarganj.—No. 65.—21st February 1935.—Maulvi A. N. M. Yusuf Ali, Sub-Registrar of Nalchiti, in the district of Bakarganj, was on leave on average pay for three days, under rule 81 (*b*) (*ii*) of the Fundamental Rules, in extension of the leave granted to him in this department notification No. 631, dated the 18th December 1934.

Mymensingh.—No. 66. — 21st February 1935.—Maulvi Abdul Hamid, No. III, Sub-Registrar of Astagram, in the district of Mymensingh, is allowed leave on average pay for fourteen days, under rule 81 (*b*) (*ii*) of the Fundamental Rules, with effect from the 1st March 1935.

Mymensingh. — No. 67. — 21st February 1935.—Babu Abala Kanta Bhaduri, Sub-Registrar attached to Mymensingh, is appointed to act as Sub-Registrar of Astagram in the same district, with effect from the date on which he joins the appointment, *vice* Maulvi Abdul Hamid, No. III, Sub-Registrar, on leave, or until further orders.

Chittagong.—No. 68.—21st February 1935.—Maulvi Shamsul Huda, Sub-Registrar attached to Chittagong, is appointed to act, until further orders, as Sub-Registrar of Boalkhali in the same district, with effect from the 21st November 1934.

Faridpur.—No. 69.—22nd February 1935.—Maulvi Md. Mokammel, Sub-Registrar of Palong, in the district of Faridpur, is allowed leave on average pay for one month, under rule 81 (*b*) (*ii*) of the Fundamental Rules, in extension of the leave granted to him in this department notification No. 10, dated the 14th January 1935.

Mymensingh. — No. 70.—22nd February 1935.—Maulvi Amiruddin Ahmed, 3rd Joint Sub-Registrar of Kalihati at Sagardighi, in the district of Mymensingh, under orders of transfer to Bhaluka in the same district, while on transit, was on leave on average pay for four days, under rule 81 (*b*) (*ii*) of the Fundamental Rules, with effect from the 2nd January 1935.

Faridpur.—No. 71.—22nd February 1935.—Maulvi Md. Yusuf, Sub-Registrar of Muksudpur, in the district of Faridpur, is allowed leave on average pay for one month, under rule 81 (*b*) (*ii*) of the Fundamental Rules, in extension of the leave granted to him in this department notification No. 18, dated the 24th January 1935.

Chittagong. — No. 72. — 22nd February 1935.—Maulvi Mahbubur Rahman, 2nd Joint Sub-Registrar of Satkaniya at Adhunagar, in the district of Chittagong, is allowed leave on average pay for four months, under rule 81 (*b*) (*ii*) of the Fundamental Rules, with effect from the date on which he may be relieved.

Tippera - Chittagong. — No. 73. — 22nd February 1935.—Babu Monindra Kishore Talapatra, Sub-Registrar attached to Comilla, Tippera, is appointed to act as 2nd Joint Sub-Registrar of Satkaniya at Adhunagar, in the district of Chittagong, with effect from the date on which he joins the appointment, during the absence, on leave, of the permanent incumbent, or until further orders.

Dacca - Bakarganj.—No. 74.—22nd February 1935.—Babu Sukhamay Ray, Sub-Registrar attached to Dacca, under orders of transfer to Golachipa, in the district of Bakarganj, is allowed leave on average pay for fifteen days, under rule 81 (*b*) (*ii*) of the Fundamental Rules, on the termination of his officiating appointment at Golachipa.

Chittagong. — No. 75. — 22nd February 1935.—Maulvi Md. Bakhtyar, Joint Sub-Registrar of Fatikchari at Kali Munshir Hat (Nanupur), in the district of Chittagong, is allowed leave on average pay for fifteen days, under rule 81 (*b*) (*ii*) of the Fundamental Rules, with effect from the 11th February 1935.

S. AHMED,

Inspector-General of Regn., Bengal.

FINANCE DEPARTMENT.

Audit.

NOTIFICATION.

No. 1243F.—15th February 1935.—In exercise of the powers conferred by rules 41, 42 and 44 of the Civil Services (Classification, Control and Appeal) Rules, the Governor in Council and acting with his Ministers is pleased to make the following amendment to the Fundamental Rules, namely:—

Amendment.

For Fundamental Rule 69 and Note 1 thereunder, the following shall be substituted, namely:—

"69. A Government servant on leave may not take any service or accept any employment without obtaining the previous sanction of—

(*a*) Government, if the proposed service or employment lies elsewhere than in India; and

(*b*) Government or any lower authority empowered to appoint him, if the proposed service or employment lies in India:

Provided that a Government servant who has been granted permission to take any service or accept any employment under this rule, during leave preparatory to retirement, shall be precluded, save with the specific consent of Government or any lower authority empowered to appoint him, from withdrawing his request for permission to retire, and from returning to duty.

Note 1.—This rule does not apply to casual literary work or to service as an examiner or similar employment; nor does it apply to acceptance of foreign service, which is governed by Rule 110."

D. GLADDING,

Secy. to the Govt. of Bengal.

MARINE DEPARTMENT.

NOTIFICATION.

No. 6Mne.—19th February 1935.—Mr. T. H. Elderton, Chairman of the Commissioners for the Port of Calcutta, is granted leave for seven months, namely, leave on average pay for two months and twenty-eight days and leave on half average pay for the remaining period, with effect from the 23rd February 1935.

Mr. W. A. Burns, Deputy Chairman, is appointed under section 12 of the Calcutta Port Act, 1890, to officiate as Chairman, during the absence, on leave, of Mr. T. H. Elderton, on the pay of the post.

Bengal Government notification No. 4Mne., dated the 6th February 1935, is hereby cancelled.

D. GLADDING,

Secy. to the Govt. of Bengal.

DEPARTMENT OF AGRICULTURE AND INDUSTRIES.

Industries.

NOTIFICATION.

Minister-in-charge: The Hon'ble Nawab K. G. M. Faroqui, Khan Bahadur.

Hooghly.—No. 1092Ind.—25th February 1935.—The term of office of the non-official members of the Committee of Management of the Government Weaving Institute, Serampore, as constituted under notification No. 1006Ind., dated the 24th February 1932, having expired, the Government of Bengal (Ministry of Industry) are now pleased to reconstitute the committee as follows:—

President.

The District Magistrate, Hooghly (*ex-officio*).

Members.

The Inspector of Technical and Industrial Institutions, Bengal (*ex-officio*).

The Principal, Government Weaving Institute, Serampore, Secretary (*ex-officio*).

The Subdivisional Officer, Serampore (*ex-officio*).

The Chairman, District Board, Hooghly (*ex-officio*).

Rai Sir Satya Charan Mukerji Bahadur, Kt., O.B.E., M.L.A.

Rai Satis Chandra Mukerjee Bahadur, Vakil, Chinsura, Hooghly.

Babu Kanai Lal Goswami, M.A.

Mr. H. N. Mullick, Managing Director, Bangeswari Cotton Mills, Limited, Serampore.

Mr. C. F. Henry, Superintendent, Adamjee Jute Mills, Limited, Belur, Howrah.

Mr. T. G. Morrow, Manager, Angus Jute Works, Bhadreswar, East Indian Railway.

Mr. S. C. Ghosh, Manager, Bengal, Luxmi Cotton Mills, Serampore.

Maulvi Syed Abdul Malek, B.L., Pleader, Civil Court, Serampore.

Maulvi Kazi Majid Baksh, retired Inspector of Schools, Burdwan Division.

The non-official members will hold office for a period of three years.

Co-operative Societies.

NOTIFICATION.

Minister-in-charge: The Hon'ble Nawab K. G. M. Faroqui, Khan Bahadur.

No. 1059Co-op.—21st February 1935.—The following draft of a notification, which, in exercise of the power conferred by section 43 of the Co-operative Societies Act, 1912 (II of 1912), the Government of Bengal (Ministry of Agriculture) propose to issue, is published, as required by sub-section (*4*) of the said section, for the information of persons likely to be affected thereby.

2. The draft will be taken into consideration on or after the 21st March 1935, and any objection or suggestion in respect thereto received by the undersigned before that date will be duly considered:—

Draft Notification.

In exercise of the power conferred by sub-section (*1*) and clauses (*e*) and (*o*) of sub-section (*2*) of section 43 of the Co-operative Societies Act, 1912 (II of 1912), the Government of Bengal (Ministry of Agriculture) are pleased to make the following amendments in the rules published with the Bengal Government notification No. 9564Agri., dated the 8th November 1920, in the *Calcutta Gazette* of the 10th *idem*, as subsequently amended, namely:—

1. To sub-rule (*3*) of rule 10 of the said rules *add* the following proviso:—

"Provided that the Registrar shall have power—

(*a*) to permit a Co-operative Land Mortgage Bank registered under the Act to incur liabilities by floating debentures, accepting deposits or otherwise borrowing to the extent of twenty times the sum of paid-up share capital and the reserve fund for the time being separately invested, and

(*b*) to permit the Bengal Provincial Co-operative Bank, Limited, or any Central Society which has an exclusive land mortgage department to finance Co-operative Land Mortgage Banks, to incur liabilities, so far as the land mortgage department is concerned, by floating debentures, accepting deposits and otherwise borrowing to the extent of twenty times the sum of paid-up share capital of the land mortgage department and the reserve fund of the said department for the time being separately invested."

2. To sub-rule (*3*) of rule 25 of the said rules *add* the following proviso:—

"Provided that the Registrar shall have power to permit a Co-operative Land Mortgage Bank registered under the Act or the Bengal Provincial Co-operative Bank, Limited, or any Central Society which has an exclusive land mortgage department to finance Co-operative Land Mortgage Banks, to make loans to a member not exceeding twenty times the amount of the share capital paid up by such member."

J. D. V. HODGE,
Secy. to the Govt. of Bengal.

Forests.

Orders by the Conservator of Forests, Bengal.

Sundarbans-Chittagong.—No. 2086For.—21st February 1935.—Babu Surendra Kumar Datta, Extra Assistant Conservator of Forests, attached to the Sundarbans Division, is transferred to the Chittagong Division in the interest of public service and is posted as an attached officer with headquarters at Chittagong, with effect from the forenoon of the 28th January 1935.

E. O. SHEBBEARE,
Conservator of Forests, Bengal.

REVENUE DEPARTMENT.

Land Revenue.

NOTIFICATIONS.

Malda. — No. 2897L.R. — 20th February 1935.—In exercise of the power conferred by section 103B, sub-section (*3*) of the Bengal Tenancy Act, 1885 (Act VIII of 1885), and in continuation of notification No. 5217L.R., dated the 26th April 1934, published at pages 635-637, Part I of the *Calcutta Gazette* of the 3rd May 1934, the Governor in Council is pleased to declare that a record-of-rights has been finally published under section 103A, sub-section (*2*) of the said Act, in respect of the remaining villages in police-stations Habibpur, Malda, Gazole, Inraj Bazar and Nawabganj, in the district of Malda.

Bogra.—No. 2904L.R.—20th February 1935.—In exercise of the powers conferred by sub-section (*3*) of section 158A of the Bengal Tenancy Act, 1885, (Act VIII of 1885), the Governor in Council is pleased to appoint Babu Bagala Prasanna Chakrabatty, Deputy Collector, Bogra, to perform the functions of a Certificate Officer under the Bengal Public Demands Recovery Act, 1913 (Bengal Act III of 1913), for the purposes of the said section in respect of the recovery of arrears of rent (including cesses) due to the estate of Raja Bahadur of Nashipur, Babu Kumud Behari Roy, Babus Manindra Nath Roy and Phanindra Nath Roy and Babu Nagendra Nath Mukherjee and others and Babu Paramananda Sen and others in the district of Bogra.

Rangpur.—No. 3109L.R.—23rd February 1935.—Babu Durga Pada Banerjee, Sub-Deputy Collector and Assistant Settlement Officer, Rangpur, is allowed leave on average pay for ten days, with effect from the 5th March 1935, or any subsequent date on which he will avail himself of the leave, under rule 81 (*b*) (*ii*) of the Fundamental Rules.

No. 3113L.R.—23rd February 1935.—Babu Prabhat Chandra Sen, Sub-Deputy Collector and Assistant Settlement Officer, on leave, is allowed leave on average pay up to the 21st March 1935, under rule 81 (*b*) (*ii*) of the Fundamental Rules, in extension of the leave already allowed in this department notification No. 736L.R., dated the 12th January 1935.

Jalpaiguri.—No. 3151L.R.—25th February 1935.—The grazing blocks noted below, which were declared as notified grazing blocks along with other blocks in Government notification No. 7944L.R., dated 5th September 1921, published in the *Calcutta Gazette* of the 14th September 1921, are excluded from the above notification and the blocks are made available for ordinary settlement under the Arable Waste Land Rules in the Western Duars of the Jalpaiguri district:—

Block No. XII.

Taluk—Duloali. Area 254·13 acres.

North—Ghoramaranadi and jotes Nos. 1058 and 529.

East—Jotes Nos. 532, 565, 567, 1057 and 568.

South and West—Ghoramaranadi.

Block No. XIII.

Taluk—Barabisha. Area 397·19 acres.

North—Jote No. 2695.

East—Jotes Nos. 931, 3187, 943, 2707, 941, 1143, 925, 913, 926, 2699, 3141, 2384, 2700 and 3052.

South—Cooch Behar State.

West—New lands, Chakchaka road and jote No. 793.

Jalpaiguri-Darjeeling.—No. 3155L.R.—25th February 1935.—The following modification is made in the rules for the grant of leases of waste lands for tea cultivation in the districts of Jalpaiguri and Darjeeling, which were published under notification No. 639T.R., dated the 10th June 1919, published at pages 950-64, Part I of the *Calcutta Gazette* of the 18th idem:—

Substitute the following for the footnote to rule 61:—

> The "rate of rent per acre paid in the neighbourhood at the time of renewal for the highest class of land under ordinary cultivation" does not refer to the rent paid by the jotedars or any particular grade of tenants, but to the rate which any chukanidar or actual cultivator can, as experience has shown, afford to pay for the most fertile land growing rice, sugarcane or any other staple crop.

Land Acquisition.

NOTIFICATIONS.

Midnapore.—No. 2899L.A.—20th February 1935.—Mr. Clifford Aloysius Noronha, Subdivisional Officer, Tamluk, in the district of Midnapore, is vested with the powers of a Collector under the Land Acquisition Act, I of 1894, in that subdivision.

Howrah.—No. 2901L.A.—20th February 1935.—The Governor in Council is pleased to cancel the notification No. 13396L.A., dated the 15th December 1934, under section 4 of the Land Acquisition Act, I of 1894, published at page 1971, Part I of the *Calcutta Gazette* of the 20th idem, in respect of the proposed acquisition of 1·32 acres of land required for constructing a flushing sluice of Dauka Khal, in the village of Dauka *alias* Raghudebbati, jurisdiction list No. 69, thana Domjur, at present police-station Sankrail, pargana Mozaffarpur, district Howrah.

Birbhum.—No. 2907L.A.—20th February 1935.—Babu Subodh Kumar Ghosh, Sadar Subdivisional Officer, Birbhum, is vested with the powers of a Collector under the Land Acquisition Act, I of 1894, in that subdivision.

24-Parganas.—No. 3091L.A.—23rd February 1935.—Whereas it appears to the Governor in Council that land is likely to be required to be taken by Government at the expense of the Kamarhati Municipality for a public purpose, viz., for the construction of the Kamarhati Municipal Office building, in the village of Belgharia, jurisdiction list No. 3, thana Baranagar, pargana Calcutta, district 24-Parganas, it is hereby notified that for the above purpose a piece of land comprising portion of cadastral plot No. 71 and measuring, more or less, 0·4958 of an acre, is likely to be required within the aforesaid village of Belgharia.

This notification is made, under the provisions of section 4 of Act I of 1894, to all whom it may concern.

A plan of the land may be inspected in the office of the Land Acquisition Collector, 24-Parganas.

In exercise of the powers conferred by the aforesaid section, the Governor in Council is pleased to authorise the officers for the time being engaged in the undertaking, with their servants and workmen, to enter upon and survey the land and do all other acts required or permitted by that section.

Any person interested in the above land, who has any objection to the acquisition thereof, may, within thirty days after the date on which public notice of the substance of this notification is given in the locality, file an objection in writing before the Collector of 24-Parganas.

Burdwan.—No. 3100L.A.—23rd February 1935.—Whereas it appears to the Governor in Council that land is likely to be required to be taken by Government at the expense of the district board, Burdwan, for a public purpose, viz., for the construction of an approach road to Kalna inspection bungalow in the village of Kalna, jurisdiction list No. 164, thana Kalna, pargana Ambicaraipur, zilla Burdwan, it is hereby notified that for the above purpose a piece of land comprising portions of cadastral survey plot Nos. 630 and 634 and measuring, more or less, 0·056 of an acre, is likely to be required within the aforesaid village of Kalna.

This notification is made, under the provisions of section 4 of Act I of 1894, to all whom it may concern.

A plan of the land may be inspected in the office of the Land Acquisition Officer, Kalna, as well as in that of the Chairman, district board, Burdwan.

In exercise of the powers conferred by the aforesaid section, the Governor in Council is pleased to authorise the officers for the time being engaged in the undertaking, with their servants and workmen, to enter upon and survey the land and do all other acts required or permitted by that section.

Any person interested in the above land, who has any objection to the acquisition thereof, may, within thirty days after the date on which public notice of the substance of this notification is given in the locality, file an objection in writing before the Collector of Burdwan.

Nadia.—No. 3103L.A. — 23rd February 1935.—Whereas it appears to the Governor in Council that land is likely to be required to be taken by Government at the expense of the district board of Nadia for a public purpose, viz., for the site of the Khoksa charitable dispensary building in the village of Khoksa, jurisdiction list No. 36, thana Khoksa, pargana Mahammadshahi, district Nadia, it is hereby notified that for the above purpose a piece of land comprising portions of cadastral plot Nos. 1949 and 1950, and measuring, more or less, 0·33 of an acre, is likely to be required within the aforesaid village of Khoksa.

This notification is made, under the provisions of section 4 of Act I of 1894, to all whom it may concern.

A plan of the land may be inspected in the office of the Subdivisional Officer, Kushtia.

In exercise of the powers conferred by the aforesaid section, the Governor in Council is pleased to authorise the officers for the time being engaged in the undertaking, with their servants and workmen, to enter upon and survey the land and do all other acts required or permitted by that section.

Any person interested in the above land, who has any objection to the acquisition thereof, may, within thirty days after the date on which public notice of the substance of this notification is given in the locality, file an objection in writing before the Collector of Nadia.

Burdwan.—No. 3106L.A.—23rd February 1935.—Whereas it appears to the Governor in Council that additional land is likely to be required to be taken by Government at the public expense for a public purpose, viz., for constructing road approaches of the head sluice of distributary No. 6/J, Main Canal, Damodar Canal Project, in the village of Faridpur, jurisdiction list No. 127, thana Burdwan, pargana Shahabad, district Burdwan, it is hereby notified that for the above purpose a piece of land comprising parts of cadastral survey plot Nos. 1057, 1058, 1362 and 2602, and measuring, more or less, 0·24 of an acre, is likely to be required within the aforesaid village of Faridpur.

This notification is made, under the provisions of section 4 of Act I of 1894, to all whom it may concern.

A plan of the land may be inspected in the office of the Special Land Acquisition Officer, Burdwan, as well as in that of the Executive Engineer, Damodar Canal Division, Burdwan.

In exercise of the powers conferred by the aforesaid section, the Governor in Council is pleased to authorise the officers for the time being engaged in the undertaking, with their servants and workmen, to enter upon and survey the land and do all other acts required or permitted by that section.

In exercise of the powers conferred by section 17(*4*) of the Land Acquisition Act, I of 1894, as amended by Act XXXVIII of 1923, the Governor in Council is pleased to direct that the provisions of section 5A of the Act shall not apply in this case.

Pabna.—No. 3162L.A.—25th February 1935.—Whereas it appears to the Governor in Council that land is likely to be required to be taken by Government at the expense of the district board of Pabna for a public purpose, viz., for the diversion of the Dulai-Santhia Road, in the village of Pipulia, jurisdiction list No. 111, thana Santhia, pargana Sinduri, district Pabna, it is hereby notified that for the above purpose a piece of land comprising cadastral plot Nos. 13 and 14 (in parts), and measuring, more or less, 0·22 of an acre is likely to be required within the aforesaid village of Pipulia.

This notification is made, under the provisions of section 4 of Act I of 1894, to all to whom it may concern.

A plan of the land may be inspected in the office of the Collector of Pabna.

In exercise of the powers conferred by the aforesaid section, the Governor in Council is pleased to authorise the officers for the time being engaged in the undertaking, with their servants and workmen, to enter upon and survey the land and do all other acts required or permitted by that section.

Any person interested in the above land, who has any objection to the acquisition thereof, may, within thirty days after the date on which public notice of the substance of this notification is given in the locality, file an objection in writing before the Collector of Pabna.

Nadia.—No. 3165L.A.—25th February 1935.—Maulvi Ali Reza, Subdivisional Officer, Ranaghat, in the district of Nadia, is vested with the powers of a Collector under the Land Acquisition Act, I of 1894, in that subdivision.

DECLARATIONS.

Rangpur.—No. 3059L.A.—23rd February 1935.—Whereas it appears to the Governor in Council that land is required to be taken by Government at the public expense for a public purpose, viz., for high level up-stream ghat of the Eastern Bengal Railway at Fulchari in the villages of Gajaria and Golna, jurisdiction list Nos. 408 and 409, respectively, thana Fulchari, pargana Patiladaha, district Rangpur, it is hereby declared that for the above purpose a piece of land measuring, more or less, 63·581 acres, bounded on the—

North—By the land in temporary occupation of Eastern Bengal Railway and the lands of Sudhansu, Jadav, Maharulla and Nasu, Trailakhya Moni Roy (wife of Promatho Nath Roy), Somarulla, Kancha Sheik, Datik Mamud and Kadir Mamud, Bharsa Mamud, Samirulla, Union Board Road, Banu Ram Das and others, Banu Ram Das, Safionessad Bibi, Rajendra Mali, Fazel Uddin Sarkar, Fazel Uddin Bepari, Halot, Sarjoo Sheik, Fazil Uddin Bepari, Pahizuddin and Majitulla,

East—By the lands of Fazul Uddin, Ohinuddin, Kamini, Maharulla, Fazul Uddin, Maharulla, Nur Hossain, Udey Sheik, Union Board Road, Adatulla Sheik, Jaga Mohan Nath, Faimuddin, Fazer Uddin Bepari, Prafulla Kanta Sen, Datik Mamud Sheik, Mayez Sheik, Kancha Sheik, Khidir Mamud, Datik Mamud, Khadir Mahamad, Datik Mamud, Afzal and Azizuddin, Ful Mamud, Kaderali, Ganli Bibi (wife of Faimuddin), Trailakhya Moni Roy (wife of Promatho Nath Roy), Faimuddin, Pinjor Beoa (wife of late Toofani Sheik), Samerulla, Daleg Bepari, Mayezuddin, Halot, Bharsa Mamud, Afzal Sheik, Nasiruddin, Easa Muddin, Somarulla Mamud, Atapjan Beoa (wife of late Gandu), Sarupal Bibi (wife of Sailu Sheik), Karpal Bibi (wife of Hakim Uddin Sheik), Samatulla, Basau Beoa (wife of Kali Mamud Sheik), Falani Beoa (wife of late Baura Sheik), Samarulla, Sarupal Bibi (wife of Sailu Sheik), Karpal Bibi (wife of Hakim Sheik), Atikulla, Affizuddin, Samatulla, Union Board Road, Sona Ulla, Kabutulla, Amatulla Bepari, Mahiruddin and Joyanuddin, Sonaulla Bepari, Gafaruddin Mandal, Mafizuddin Mandal, Gafaruddin Mandal, Mafizuddin Mandal, Gafaruddin Mandal, Mafizuddin Mandal, Ahammad Mada, Banu Ram Das and others, Mahim Chandra Das, Safionessad Bibi (wife of Mayezuddin), Union Board Road, Mayezuddin Sheik, Rajabuddin, Mafizuddin and Khaliluddin, Yakubali Sarkar, Fazeluddin Sarkar, Arjulla Sheik, Ram Dayal Mali, Rajendra Mali, Ram Dayal Mali, Banu, Sanu, Sanjoo Sheik, Banu, Sanu, Soveulla and Saduali, Rajabuddin and others, Sovaulla and Saderali, Mayezuddin, Bhitoo Sheik, Ebrahim and Salumaddi, Bhitoo Sheik, Sarjoo Sheik, Faziluddin Bepari, Ichahak, Baharuddin Fakir, Nritya Bardhan, Halot, Ichahak,

Arzulla, Mohrullah, Aditullah, Ziartullah, Bhutu Bairagi, Halot, Rudar Mandal, Jaiat Dhar Das, Maffat Sheik, Batal Bepari, Phul Sheik, Udey Sheik, Ketu and Mianjan, Nur Hossain, Union Board Road, Trailakhya Moni Roy (wife of Promatho Nath Roy), Kademali Sheik, Trailakhya Moni Roy (wife of Promatho Nath Roy), Ganli Bibi (wife of Faimuddin), Gabra Sheik, Trailakhya Moni Ray (wife of Promatho Nath Roy), Kademali Sheik, Batal Bepari, Ganli Bibi (wife of Faimuddin), Trailakhya Moni Roy (wife of Promatho Nath Roy), Kademali Sheik, Afzal, Khader Mamud, Kamar Sheik and Keshan Beoa (wife of late Haiyat Mamud), Halot, Khidir Mamud, Nazali, Easin Mamud, Samaruddin, Bakher Mamud, Samirulla,

South—By the lands of Trailakhya Moni Roy (wife of Promatho Nath Roy) and Union Board Road, Galni Bibi, Kadim Ali Mamud, Matiulla Sheik, Gobra Sheik, Khidir Mamud, Kaderali Mamud, Trailakhya Moni Roy (wife of Promatho Nath Roy), Afzal, Azizuddin, Khedir Mamud, Nazali, Ran Mamud Sheik, Banu Ram Das and others, Mahim Chandra Das, Safionessad Bibi, graveyard, Mafizuddin and Khalil Uddin, Rajendra Mali, Banu, Sanu, Rajabuddin, Sanjoo Sheik, Bhitoo Sheik, Bhitoo Sheik, and the lands of Eastern Bengal Railway,

West—By the lands of Mohrullah, Ziartullah, Mohrullah, Fahimuddin, Adit Ulla, Fazulluddin, Arzullah, Bajru Sheik, Ketu Sheik, Mohrullah, Aditulla, Prafulla Kanta Sen, Johir Mahammad, Rameswar Deb Nath, Nur Hossain Bepari, Prafulla Kanta Sen, Kancha Sheik, Nur Hossain, Hazir Mamud Sarkar, Trailakhya Moni Roy (wife of Promatho Nath Roy), Kadimulla, Ganli Bibi (wife of Faimuddin), Betai Bepari, Trailakhya Moni Roy (wife of Promatho Nath Roy), Azetulla Sheik, Tarak Nath Roy, Pacha Sheik, Gabra Sheik, Samarulla, Bharsa Mamud, Afzal Mamud and others, Halot, Afzal Mamud and others, Easin Uddin and Nasiruddin Mamud, Samirulla Mamud, Sudhangshu, Bir Mohan Dass, Adhar, Sudhan, Jadav, Fazuluddin, Nazir, Felan Sarkar, Tahir Mamud, Nur Hossain, Bachha Bibi, Jadav, Maharulla and Nasu, Doti Mamud, Afzal, Nur Hossain, Union Board Road, Trailakhya Moni Roy (wife of Promatho Nath Roy), Ganli Bibi (wife of Faimuddin), Arjula Sheik, Dakshya Bala Ray (wife of Tarak Nath Ray), Ayatulla Sheik, Kademali Mamud, Samiruddin Sheik, Kademali Mamud, Gobra Sheik, Kayamatulla, Komar Sheik, Keson Beoa (wife of Hayet Mamud), Halot, Bharsa Mamud, Nazole Rahaman, Samer Ulla, Kamdya and Belatali, Ran Mamud Sheik, Sona Ulla, Narul Hossain, Union Board Road, Abul Hossain Sarkar, Abdul Gani Bepari, Sona Ulla Mamud, Safatulla Mamud, Ran Mamud Sheik, Ebarat Ulla Sheik, Sona Ulla Bepari, Ahammad Mandal, Rajabuddin, Jabanuddin Sarkar, Rajabuddin Sarkar, Jabanuddin Sarkar, Banu Ram Das and others, Mahim Chandra Das, Banuram Das, Safionessad Bibi (wife of Mayezuddin), Nasiban and Rahaman, Safionessad Bibi (wife of Mayezuddin), Mafizuddin and Khaluudin, graveyard, Union Board Road, Mayezuddin, Yakubali Sarkar, Mafizuddin and Khaliluddin, Fajiluddin Mahamad, Mayezuddin Sarkar, Yakubali Sarkar, Khaliluddin and Mafizuddin Sarkar, Sarabulla Sheik, Mafizuddin Sarkar, Fajiluddin, Rajabuddin Sarkar, Taripuddin, Rajendra Mali, Banu and Sanu, Fajiluddin and others, Rajabuddin, Fazil Uddin Bepari, Bhitoo Sheik, Rajabuddin and Omaruddin, Sova Ulla and Soderali, Mayezuddin Sheik, Afazuddin and Mafiluddin, Rahizuddin, Ebrahim and others, Bhitoo Sheik, Sova Ulla and Soderali Sheik, Baharuddin, Sanjoo Sheik, Mayezuddin and Seveulla Akanda, Pahizuddin, Rahizuddin and Mojiltulla Sheik,

is required within the aforesaid villages of Gajaria and Golna.

This declaration is made, under the provisions of section 6 of Act I of 1894, to all whom it may concern.

A plan of the land may be inspected in the office of the Subdivisional Officer, Gaibandha.

Hooghly.—No. 3094L.A.—23rd February 1935.—Whereas it appears to the Governor in Council that land is required to be taken by Government at the public expense for a public purpose, viz., for the extension of the thana compound of Balagarh police-station in the village of Chandra, jurisdiction list No. 83, thana Balagarh, pargana Banihati, district Hooghly, it is hereby declared that for the above purpose a piece of land comprising cadastral plots Nos. 78 and 79, and measuring, more or less, 0·85 of an acre, bounded on the—

North—By the river Bhagirathi and plot No. 80,
East—By plot No. 80,
South—By plot No. 875,
West—By the existing thana compound,

is required within the aforesaid village of Chandra.

This declaration is made, under the provisions of section 6 of Act I of 1894, to all whom it may concern.

A plan of the land may be inspected in the office of the Collector of Hooghly.

Burdwan.—No. 3097L.A.—23rd February 1935.—Whereas it appears to the Governor in Council that land is required to be taken by Government at the public expense for a public purpose, viz., for constructing the approaches of the proposed bridge at mile 13, chainage 27 and 57 feet of distributary No. 6 of the main canal, Damodar Canal Project, in the village of Ramchandrapur, jurisdiction list No. 109, thana Burdwan, pargana Shahabad, district Burdwan, it is hereby declared that for the above purpose two pieces of land comprising parts of cadastral survey plot Nos. 2428-2431 and altogether measuring, more or less, 0·38 of an acre, are required within the aforesaid village of Ramchandrapur

This declaration is made, under the provisions of section 6 of Act I of 1894, to all whom it may concern.

A plan of the land may be inspected in the office of the Special Land Acquisition Officer, Burdwan, as well as in that of the Executive Engineer, Damodar Canal Division, Burdwan.

Excluded Area.

NOTIFICATIONS.

Darjeeling.—No. 3158E.A.—25th February 1935.—The following draft of amendments, which, in exercise of the powers conferred by clause (*b*) of section 138 of the Bengal Local Self-Government Act, 1885 (Bengal Act III of 1885), the Governor in Council proposes to make in the rules published with notification, dated the 11th February 1886, as subsequently amended, is published for the information of persons likely to be affected thereby.

2. The draft will be taken into consideration on the 1st May 1935, and any objection or suggestion which may be received by the undersigned, through the Deputy Commissioner, Darjeeling, before that date will be duly considered:—

Draft amendments.

1. In rule 66, after the word "Vice-Chairman" in the first sentence, *insert* the following words:—

"or in the case of a district board having two Vice-Chairmen, the first Vice-Chairman, or in the absence of both, the second Vice-Chairman".

2. In rule 70—

(1) after the word "Vice-Chairman" in line 1, *insert* the words—

(*a*) "or in the case of a district board having two Vice-Chairmen, the first Vice-Chairman, or in the absence of both, the second Vice-Chairman", and

(2) for the words "both the Chairman and Vice-Chairman" *substitute* the words "the Chairman and Vice-Chairman or both the Vice-Chairmen as the case may be,".

Darjeeling.—No. 3160E.A.—25th February 1935.—The following draft of amendments, which, in exercise of the power conferred by clauses (*i*) and (*t*) of section 138 of the Bengal Local Self-Government Act, 1885 (Bengal Act III of 1885), the Governor in Council proposes to make in the rules published with notification No. 2158L.S.-G., dated the 5th September 1918, as subsequently amended, is published for the information of persons likely to be affected thereby.

2. The draft will be taken into consideration on the 1st May 1935, and any objection or suggestion which may be received by the undersigned, through the Deputy Commissioner, Darjeeling, before that date will be duly considered:—

Draft amendments.

In rule 187—

(*i*) for the words "by the Vice-Chairman or by the Chairman, or if both be absent", *substitute* the words "by a Vice-Chairman or by the Chairman or, in their absence",

(*ii*) for the words "both by the Chairman and the Vice-Chairman, and if either of them be absent, such cheques shall be signed by the Chairman or Vice-Chairman present and another member of the Finance Committee", *substitute* the words "both by the Chairman and a Vice-Chairman, or in the absence of the Chairman, by both the Vice-Chairmen where there are two Vice-Chairmen, or if only one of these officers be present, by that officer and by a member of the Finance Committee".

Excise.

NOTIFICATION.

Minister-in-charge: The Hon'ble Sir Bijoy Prasad Singh Roy, Kt.

Burdwan.—No. 172Ex. — 19th February 1935.—In exercise of the power conferred by clause (*2*) of section 86 of the Bengal Excise Act, 1909 (Bengal Act V of 1909), the Government of Bengal (Ministry of Excise) are pleased to make the following amendment in the rules for regulating the manufacture and sale of *pachwai* in areas in Bengal where the fixed-fee system of settlement of *pachwai* shops is in force, except in the district of Darjeeling, published under notification No. 92Ex., dated the 6th January 1926, on page 35, Part I of the *Calcutta Gazette* of the 14th January 1926, namely—

In rule 8 of the said rules, for the words "*Pachwai* shall be sold by the vendors thereof at such fixed rate or rates for each maund of rice used as are prescribed by the Government, and duly inserted in the license," *substitute* the words and figures "*Pachwai* shall be sold by the vendors thereof at Rs. 16 per maund of rice used in the Asansol subdivision of the district of Burdwan and at Rs. 12 per maund of rice used in the rest of the Presidency except the Asansol subdivision."

O. M. MARTIN,

Secy. to the Govt. of Bengal.

Orders by the Commissioner of Excise and Salt, Bengal.

No. 55Exc.—20th February 1935. — Babu Khagendra Nath Acharyya, Sub-Inspector of Excise and Salt, Sadar and Chuadanga Warehouses, Nadia, who has been appointed temporary Inspector of Excise and Salt by Government, is posted to Calcutta and placed in charge of the bonded laboratories of Messrs. James Anderson and Company and Messrs. Davidson and Company, in the public interest.

S. K. HALDAR,

Commr. of Excise and Salt, Bengal.

IRRIGATION DEPARTMENT.

Irrigation.

NOTIFICATION.

No. 1-I.—21st February 1935.—The Governor in Council is pleased to direct, under section 63 of the Bengal Embankment Act, 1882 (Bengal Act II of 1882), that an estimate shall be made of the probable expenses to be incurred in respect of the repairs, maintenance and works connected therewith of the Madaria Khal Left Embankment from Amta to Dilakash, in the district of Howrah, for a period of five years commencing from the 1st April 1935.

Establishment.

NOTIFICATIONS.

No. 1.—21st February 1935. — Mr. J. F. Russell, Executive Engineer, is granted leave on average pay for six months and nineteen days, under rule 81 (*b*) (*i*) of the Fundamental Rules, with effect from the 26th January 1935.

No. 2.—21st February 1935. — Mr. J. D. Watson, Executive Engineer, on being relieved of the charge of the Dredger subdivision, is appointed to act as Personal Assistant to the Chief Engineer, Bengal, Irrigation Department, *vice* Mr. J. F. Russell, on leave, or until further orders.

J. D. V. HODGE,
Secy. to the Govt. of Bengal.

HIGH COURT NOTICES.

English Department.

The 18th February 1935.

No. 3591G.—The following draft rule making an amendment in the provisions of the First Schedule to the Code of Civil Procedure, 1908, having been framed by the High Court of Judicature at Fort William in Bengal, is published for general information, under section 122 of the Code, and will be finally taken into consideration by the High Court on or after the 18th March 1935:—

Draft Rule.

Insert the following words after the word "appendices" in Rule 3, Order XLVIII:—

"Or such other forms as may be prescribed by the High Court of Judicature at Fort William in Bengal".

English Department—Civil.

The 19th February 1935.

No. 3647A.—In exercise of the powers delegated to the High Court by the notification of the Government of Bengal No. 64J.D., dated the 30th April 1915, Babu Tejendra Nath Basu, munsif of Barisal, in the district of Bakarganj, is vested under article 8 of the Second Schedule of the Provincial Small Cause Courts Act, 1887 (IX of 1887), with powers to try, under the Small Cause Court procedure, suits up to the value of Rs. 250 for the recovery of rents of homestead lands arising within the municipal area within his jurisdiction.

Civil.

The 22nd February 1935.

No. 3920A.—Maulvi Md. Abdul Wahab, munsif of Barisal, in the district of Bakarganj, is vested with the powers of a Judge of a Court of Small Causes for the trial of suits cognizable by such a Court up to the value of Rs. 100 within the local limits of the Barisal munsifi.

By order of the High Court,

N. L. HINDLEY, *Registrar.*

ORDERS BY COMMISSIONERS OF DIVISIONS.

Burdwan Division—Chinsura.

No. 921J.G.—18th February 1935.—Babu Chandra Kumar Sen Gupta, Sub-Deputy Collector of Serampore, in the district of Hooghly, is transferred temporarily to Contai, in the district of Midnapore, on general duty.

2. The transfer is made in the public interest.

L. B. BURROWS, *Commissioner.*

Burdwan, the 14th February 1935.

It is hereby notified for general information that, under section 13 of the Bengal Village Self-Government Act, 1919 (Bengal Act V of 1919), read with rule 36 of the rules for the election and appointment of members of union boards, etc., Babu Mrigendranath Sarkar has been appointed by the District Magistrate of Burdwan to be a member of the Kaiti union board in police-station Raina in the Sadar subdivision of Burdwan, *vice* Babu Binode Bihari Karmakar, deceased.

Burdwan, the 18th February 1935.

It is hereby notified for general information that, under section 13 of the Bengal Village Self-Government Act, 1919 (Bengal Act V of 1919), read with rule 36 of the rules for the election and appointment of members of union boards, etc., Babu Bipin Chandra Pan has been appointed by the District Magistrate of Burdwan to be a member of the Palashan union board in police-station Raina in the Sadar subdivision of Burdwan, *vice* Babu Annada Prosad Ta, deceased.

M. M. STUART, *District Magistrate.*

Bankura, the 18th February 1935.

No. 773J.—It is hereby notified for general information that, under sub-section 2 of section 6 of the Bengal Village Self-Government Act, 1919 (Bengal Act V of 1919) the following gentlemen have been duly elected to be members of the under-mentioned union boards in the Vishnupur subdivision of the district of Bankura:—

Patrasayer police-station.

Narayanpur union board.

Ward No. I.

Babu Satish Chandra Paul.

Ward No. II.

Babu Nalinaksha Mandal.

Ward No. III.

Babu Amar Chandra Mandal.

Ward No. IV.

Babu Pashupati Paul.

Ward No. V.

Babu Shome Nath Mandal.
Babu Indra Bhusan Mandal.

Hamirpur union board.

Ward No. I.

Munshi Ekin Mandal.

Ward No. II.

Babu Jagadiswar Roy.
Babu Suchand Das.

Ward No. III.

Babu Sashi Bhusan Chaudhuri.
Babu Akinchan Ghose.

Ward No. IV.

Babu Amrita Lal Misra.

Patrasayer union board.

Ward No. I.

Babu Tulsi Ram Das.
Babu Kamalanga Bhattacharya.
Babu Rammoy Hazra.

Ward No. II.

Babu Chandra Sekhar Das.
Babu Charu Chandra Chatterjee.

Ward No. III.

Babu Hari Prasad Dutta.

Biur union board.

Ward No. I.

Babu Fakir Chaudhuri.

Ward No. II.

Babu Achyuta Nanda Basu.

Ward No. III.

Babu Tinkari Mandal.

Ward No. IV.

Babu Hangseswar Mitra.
Munshi Ismail Shaikh.

Ward No. V.

Babu Anukul Chandra Roy.

Balsi union board.

Ward No. I.

Babu Jogendra Nath Sen.

Ward No. II.

Babu Subodh Kumar Mukhopadhya.

Ward No. III.

Babu Krishna Chandra Koar.
Babu Anadi Prosad Mukherji.

Ward No. IV.

Babu Atul Krishna Paul.

Ward No. V.

Babu Ram Nidhi De.

Kusadwip union board.

Ward No. I.

Shaikh Ekram Hossain.

Ward No. II.

Babu Nikunja Behari Goswami.
Babu Bhut Nath Mukherji.

Ward No. III.

Babu Bibhuti Bhusan Bandopadhya.

Ward No. IV.

Babu Satya Krishna Ghose.

Ward No. V.

Babu Pravakar Barik.

Jamkuri union board.

Ward No. I.

Babu Girish Chandra Koar.

Ward No. II.

Babu Anukul Chandra Ghose.

Ward No. III.

Babu Bhabendra Nath Pan.

Ward No. IV.

Babu Anukul Chandra Chakravarty.

Ward No. V.

Babu Surja Narayan Singha Thakur.

Ward No. VI.

Babu Ram Pada Biswas.

Birsingha union board.

Ward No. I.

Babu Kishori Mohan Chatterjee.
Babu Durga Das Ghose.

Ward No. II.

Babu Surendra Nath Bandopadhya.

Ward No. III.

Babu Ram Krishna Ghose.
Babu Radha Renu Khan.
Babu Ram Nath De.

Indas police-station.

Amrul union board.

Ward No. I.

Babu Kishori Mohan Majhi.

Ward No. II.

Babu Kali Pada Ghosal.

Ward No. III.

Babu Hem Chandra Meddya.

Ward No. IV.

Babu Surendra Nath Mandal.

Ward No. V.

Babu Hrishi Kesh Mazumdar.

Ward No. VI.

Babu Surja Kumar Dalal.

Karisunda union board.

Ward No. I.

Saiyad Muhammad Mahmud.
Babu Sarat Chandra Paul.

Ward No. II.

Babu Karali Pada Mitra.
Babu Jatindra Nath Ghose.

Ward No. III.

Babu Manmatha Nath Bhandari.
Babu Bama Pada Jas.

Indas union board.

Ward No. I.

Maulvi Muhammad Fazlul Karim.

Ward No. II.

Babu Kiran Chandra Bandopadhay.

Ward No. III.

Babu Bhupati Ghosal.

Ward No. IV.

Babu Prafulla Chandra Sarkar.

Ward No. V.

Babu Sarat Kumar Bose.
Babu Sarat Chandra Kundu.

Rol union board.

Ward No. I.

Maulvi Quazi Ali Akhtar.
Babu Nrisingha Murari Nag.

Ward No. II.

Babu Pashu Pati Daw.

Ward No. III.

Maulvi Khondkar Muhammad Rashed.
Maulvi Chaudhuri Muhammad Ilias.

Ward No. IV.

Babu Dwija Prasanna Sarkar.

Sashpur union board.

Ward No. I.

Babu Umapati Shamanta.

Ward No. II.

Babu Nalinakhya Sham.

Ward No. III.

Babu Govinda Chandra Mukhopadhya.

Ward No. IV.

Babu Man Govinda Hati.

Ward No. V.

Babu Probodhananda Bandopadhya.

Ward No. VI.

Babu Govinda Prasad Ghose.

Akui union board.

Ward No. I.

Babu Gobinda Chandra Mandal.

Ward No. II.

Babu Benod Behari Panja.

Ward No. III.

Babu Bankim Chandra Roy.

Ward No. IV.

Babu Ram Pada Dutta.

Ward No. V.

Babu Sarat Chandra Sarkar.

Ward No. VI.

Maulvi Choudhuri Tayebar Rahman.

Mangalpur union board.

Ward No. I.

Babu Mahananda Chattopadhya.

Ward No. II.

Babu Sishu Ranjan Ghose.

Ward No. III.

Babu Nalinaksha Dutta.

Ward No. IV.

Babu Prasanna Kumar Ghosh.

Sonamukhi police-station.

Manikbazar union board.

Ward No. I.

Babu Ananta Lal Chaudhury.

Ward No. II.

Babu Sarat Chandra Ghose.
Babu Akhay Kumar Roy Sardar.

Ward No. III.

Babu Krishna Das Banerjee.

Ward No. IV.

Babu Harish Chandra Pratihar.
Babu Gopeswar Mandal.

Nabasan union board.

Ward No. I.

Babu Satish Chandra Bandopadhya.

Ward No. II.

Babu Gati Nath Mandal.

Ward No. III.

Babu Nitya Kali Chaudhuri.

Ward No. IV.

Babu Ram Pada Gaen.

Ward No. V.

Babu Nalinaksha Nayek.

Ward No. VI.

Babu Krishna Chandra Mandal.

Radhamohanpur union board.

Ward No. I.

Babu Dole Gobinda Ghose.

Ward No. II.

Babu Jogendra Ghose.

Ward No. III.

Babu Trilochan Sarma.
Babu Hrishi Kesh Khan.

Ward No. IV.

Babu Natabar Ray.

Ward No. V.

Babu Baburam Jana.

Dhansimla union board.

Ward No. I.

Babu Gadadhar Banerji.

Ward No. II.

Maulvi Shaikh Golam Rasul.

Ward No. III.

Maulvi Shaikh Muhammad Israil.
Babu Ashutosh Bandopadhya.
Babu Girija Bhusan Chattopadhya.

Ward No. IV.

Maulvi Shaikh Rustam Ali.

Dihipara union board.

Ward No. I.

Babu Umapada Chattopadhya.

Ward No. II.

Babu Gouri Pada Khara.

Ward No. III.

Babu Priya Nath Koar.
Babu Bijoy Krishna Chattopadhya.

Ward No. IV.

Babu Nirmal Chandra Bhattacharji.

Ward No. V.

Babu Gati Krishna Sarkar.

Dhulai union board.

Ward No. I.

Babu Rasamay Roy.
Babu Kulada Prasad Chakravarty.

Ward No. II.

Babu Krishna Lal Chattopadhya.

Ward No. III.

Babu Arun Chandra Bandopadhya.

Ward No. IV.

Maulvi Muhammad Gahar Mirdha.

Ward No. V.

Babu Ram Pada Bandopadhya.

Pearbera union board.

Ward No. I.

Munshi Altaf Shaikh.

Ward No. II.

Babu Upendra Nath Ghose.

Ward No. III.

Babu Satish Chandra Bere.

Ward No. IV.

Babu Atul Chandra Kundu.

Ward No. V.

Babu Natabar Pan.

Ward No. VI.

Munshi Lokman Shaikh.

Hamirhati union board.

Ward No. I.

Babu Dhan Krishna Koar.

Ward No. II.

Babu Bagala Prasad Bhattacharji.

Ward No. III.

Babu Nimai Charan Hazari.
Babu Radha Nath Sinha.

Ward No. IV.

Babu Anukul Chandra Hazari.

Ward No. V.

Babu Purna Chandra Singha.

Panchal union board.

Ward No. I.

Babu Purna Chandra Misra.
Babu Indra Narayan Dutta.

Ward No. II.

Babu Sarada Prasad Ghosh.

Ward No. III.

Babu Akhoy Kumar Chakravarty.

Ward No. IV.

Babu Sukhamay Bandopadhya.

Ward No. V.

Babu Rabi Lochan Chattopadhya.

Indas police-station.

Dighalgram union board.

Ward No. I.

Babu Rakhal Dana *alias* Bhupendra Nath Dana.

Ward No. II.

Babu Jatindra Nath Jash.
Babu Narayan Chandra Chakravarty.

Ward No. III.

Babu Satish Chandra Banerji.

Ward No. IV.

Babu Jugal Chandra Biswas.

Ward No. V.

Babu Kali Pada Singha.

No. 774J.—Under sub-section (*3*) of section 6 of the Bengal Village Self-Government Act, 1919 (Bengal Act V of 1919), the following gentlemen have been appointed to be the members of the under-mentioned union boards in the Vishnupur subdivision of the district of Bankura:—

Sonamukhi police-station.

Dihipara union board.

Babu Sarat Chandra Chatterjee.
Babu Basanta Kumar Ghose.
Babu Surja Bauri.

Pearbera union board.

Maulvi Dedar Bux Hazari.
Babu Abani Mohan Mitra.
Babu Gour Lohar.

Hamirhati union board.

Babu Sarat Kumar Mukherjee.
Babu Hrishi Kesh Pal.
Babu Rakhal Roy.

Dhulai union board.

Babu Satchida Nanda Ghose.
Babu Padma Lochan Bagdi.
Babu Dharani Dhar Singha.

Kochdihi union board.

Babu Basanta Kumar Chakravarty.
Babu Gour Hari Roy.
Babu Gostha Behari Mandal.

Panchal union board.

Babu Sasi Bhusan Chattapadhya.
Babu Indra Narayan Lohar.
Babu Ram Chandra Chattapadhya.

Manikbazar union board.

Babu Surendra Kumar Bose.
Babu Fakir Chandra Roy.
Babu Abinash Chandra Chaudhuri.

Nabasan union board.

Babu Sashi Bhusan Roy.
Babu Rakhal Bagdi.
Maulvi Ali Muhammad Mandal.

Radhamohanpur union board.

Babu Rakhal Chandra Chaudhuri.
Maulvi Muhammad Wahed Mallick.
Babu Upendra Bauri.

Dhansimla union board.

Babu Nabanirod Ghose.
Babu Bhuban Mohan Bandapadhya.
Babu Jahuri Roy.

Patrasayer police-station.

Narayanpur union board.

Babu Phani Bhusan Mondal.
Babu Ananta Muchi.
Munshi Mafizuddin Molla.

Hamirpur union board.

Babu Ram Renu Patra.
Babu Manindra Nath Ghose.
Babu Manindra Lohar.

Patrasayer union board.

Babu Dhirendra Nath Hazra.
Babu Santa Nath Chatterjee.
Babu Abhoy Charan Mete.

Biur union board.

Maulvi Lutfar Rahman.
Babu Bankim Chandra Palit.
Babu Kunja Bagdi.

Balsi union board.

Babu Rajani Kanta Mukherjee.
Babu Hari Das Bagdi.
Munshi Johadar Rahim Mandal.

Kusadwip union board.

Babu Radha Gobinda Mitra.
Babu Manindra Bagdi.
Munshi Yakub Shaikh.

Jamkuri union board.

Maulvi Shaikh Rustam Ali.
Babu Manindra Nath Sen.
Babu Banwari Tetulia.

Birsingha union board.

Babu Bhaba Taran Singh.
Babu Kulada Prasad Roy.
Babu Ajodhya Lohar.

Indas police-station.

Amrul union board.

Babu Radhika Prasad Samanta.
Maulvi Shaikh Abdul Aziz.
Babu Pashupati Bagdi.

Karisunda union board.

Babu Basanta Kumar Roy.
Babu Panchanan Saha.
Maulvi Muhammad Majlu Mallik.

Indas union board.

Babu Sudhir Kumar Singha Dev.
Babu Umesh Bagdi.
Maulvi Saiyad Hossain Mortaja.

Rol union board.

Babu Prafulla Kumar Bose.
Babu Nrisingha Prasad Bandapadhya.
Babu Manmatha Bagdi.

Sashpur union board.

Babu Nani Gopal De.
Babu Sasi Bhusan Shaw.
Maulvi Saiyad Mafzul Hossain.

Akui union board.

Babu Binod Gopal Roy.
Munshi Pegum Bux.
Babu Sridhar Muchi.

Mangalpur union board.

Babu Satya Kinkar Hati.
Babu Braja Basi Muchi.
Munshi Harunar Rasid.

Dighalgram union board.

Babu Prafulla Kumar Bhattacharya.
Munshi Badiazzaman Mallik.
Babu Abinash Chandra Bagdi.

No. 775J.—Under sub-section (*4*) of section 6 of the Bengal Village Self-Government Act, 1919 (Bengal Act V of 1919), the following gentlemen have been appointed to be the members of the under-mentioned union boards in the Vishnupur subdivision of the district of Bankura:—

Sonamukhi police-station.

Kochdihi union board.

Ward No. I.

Babu Satish Chandra Ghatak.
Babu Ram Ratan Khan.

Ward No. II.

Babu Jogendra Nath Singha Thakur.

Ward No. III.

Babu Salgram Das.

Ward No. IV.

Babu Golak Behari Mandal.

Ward No. V.

Babu Abinash Chandra Chakravarty.

Indas police-station.

Mangalpur union board.

Ward No. V.

Babu Golak Behari Sarkar.

Ward No. VI.

Babu Kali Pada Chaudhuri.

T. C. ROY, *District Magistrate.*

Birbhum, the 22nd February 1935.

No. 1917J.—In modification of notification published in the *Calcutta Gazette* on the 3rd May 1934, Babu Kumud Nath Sen, M.A., B.T., officiating Assistant Head Master, Birbhum Zilla School, is appointed as teachers' representative in the managing committee of the Birbhum Zilla School, in place of Babu Bejoy Kumar Bhattacherjee, transferred.

K. L. MOOKERJI, *District Magistrate.*

Midnapore, the 22nd February 1935.

Under rule 32A of the Local Self-Government Election Rules, it is notified for general information that a by-election for a member in place of Babu Sital Das Roy, deceased, an elected member of the Ghatal local board, will be held on 11th March 1935 from 10 a.m. to 3 p.m. at the places noted below :—

The shed erected for Kharar Barwari.
School building at Natuk.
Baghbazar, Ghatal.

P. J. GRIFFITHS, *District Magistrate.*

No. 989J.G.—21st February 1935.—It is hereby notified that Babu Naba Kumar Sing Dudhoria, one of the accepted candidates for by-election from the Burdwan Division Non-Muhammadan Rural constituency of the Indian Legislative Assembly, has filed, on the 12th January 1935, his return of election expenses and the declaration in respect thereof, as required by rule 19, clauses (*1*) and (*3*) respectively of the Legislative Assembly Electoral Rules. They can be inspected in the office of the Commissioner of the Burdwan Division, Chinsura, on payment of a fee of one rupee between the hours of 11 a.m. and 3 p.m. for one week from the date of publication of this notification in the gazette or from the 4th March 1935, whichever is later.

No. 991J.G.—21st February 1935.—It is hereby notified that Babu Debendra Lal Khan, one of the accepted candidates for the by-election from the Burdwan Division Non-Muhammadan Rural constituency of the Indian Legislative Assembly, has filed, on the 18th February 1935, his return of election expenses and the declaration in respect thereof, as required by rule 19, clauses (*1*) and (*3*) respectively of the Legislative Assembly Electoral Rules. These can be inspected in the office of the Commissioner of the Burdwan Division, Chinsura, on payment of a fee of one rupee between the hours of 11 a.m. and 3 p.m. for one week from the publication of this notification in the gazette or from the 4th March 1935, whichever is later.

L. B. BURROWS, *Returning Officer.*

Chittagong Division—Chittagong.

No. 961G.—23rd February 1935.—Under rule 20 (*b*) of the rules for the management of hospitals and dispensaries in Bengal, it is hereby notified for general information that the gentlemen whose names are shown in the second column of the statement below have been appointed members of the managing committees of the district board dispensaries shown against their names in the vacancies caused by the death of the gentlemen mentioned in the third column :—

Tippera district.

Names of dispensaries.	Names of gentlemen appointed.	Names of the deceased members.
Bancharampur	Babu Rama Kanta Das of Bancharampur ..	Babu Rajani Kanta Das of Bancharampur.
Rupsa ..	Maulvi Syed Abdur Rashid, Zamindar, Rupsa.	Khan Sahib Syed Md. Habibulla, Zaminda of Rupsa.
Kachua ..	Babu Rajendra Lal Tewari .	Babu Baladin Tewari.
Hajigonj ..	Babu Kshetra Mohan Saha ..	Babu Radha Kishore Roy.

No. 964G.—23rd February 1935.—Under rule 20 (*b*) of the rules for the management of hospitals and dispensaries in Bengal, it is hereby notified for general information that the gentlemen named below have been appointed to be members of the managing committees of the following district board dispensaries in the district of Tippera :—

Names of dispensaries.	Names of gentlemen appointed.	Names of members deemed to have vacated their seats.
Shilmuri ..	Babu Madhu Sudan Majumdar of Shilmuri	Babu Annada Prasanna Kar of Galimpur.
	Munshi Ahmed Afzalali Mazumdar of Barabatua.	Munshi Fato Ali Bhuiya of Nalua.
	Munshi Yakubali Mazumdar of Barabatua	Maulvi Abdul Mazid of Chikotipara.
Bidyakut ..	Munshi Shofiuddin Ahmed of Kurighar	Munshi Munzar Ali Sarkar of Kurighar.
	Munshi Keramat Ali Bhuiya of Shomantaghar.	Munshi Abdul Jabbar Molla of Bidyakut.
Burichang ..	Babu Ramesh Chandra Bhattacherjee of Burichang.	Munshi Afazuddin Mea of Jurain.
	Munshi Abdur Rahman of Uttar Shyampur	Munshi Md. Fazil Bhuiya of Ichhapura.
Kachua	Munshi Abdul Latif Meah of Koa Chandpur	Munshi Azgar Ali Molla of Tetuia.

H. J. TWYNAM, *Commissioner.*

Comilla, the 15th February 1935.

No. 1398M.—It is hereby notified for general information that in exercise of the powers conferred by rule 32A of the election rules under the Local Self-Government Act, the undersigned fixes 25th March 1935 to be the date of election of members both for ordinary and special seats in the various local boards of the district of Tippera.

It is further notified that the declaration of the result of the elections under rule 43A(*iii*) will be made by me on the 8th April 1935, at 2 p.m., in the *ejlash* of the Collector.

E. W. HOLLAND, *District Magistrate.*

Comilla, the 22nd February 1935.

No. 1596M.—It is hereby notified for general information that, under section 13 of the Bengal Village Self-Government Act, 1919, read with rule 36 of the rules regarding the election and appointment of members of union boards, Babu Chinta Haran Sarkar has been appointed to be a member of the Mohanpur union board No. IV, thana Matlab in the Chandpur subdivision of the Tippera district, *vice* Babu Ambica Charan Sarkar, deceased.

A. HYE, *District Magistrate.*

Orders by the Deputy Inspector-General of Police, Bakarganj Range.

Barisal.—No. 906.—21st February 1935.—Babu Lalit Chandra Chakrabatti, officiating Inspector, Chittagong, will continue to act as such, *vice* Babu Jogini Mohan Basu, Inspector, Chittagong (employed in the District Intelligence Branch, Dacca), granted leave.

Khan Sahib Maulvi Abdul Jabbar Chaudhuri, Inspector, Noakhali, is granted 1 month and 15 days' leave on average pay, under rule 81 (*b*) (*ii*) of the Fundamental Rules.

Sub-Inspector Binod Bihari Das Gupta of Noakhali, is appointed to act as Inspector in the vacancy.

G. H. MANNOOCH,

Deputy Inspector-General of Police (offg.).

Dacca Division—Dacca.

No. 846J.—21st February 1935. — Maulvi S. M. Siddique Ahmad, Sub-Deputy Collector, on leave, is posted to the Tangail subdivision of the district of Mymensingh on general duty.

No. 852J.—21st February 1935. — Maulvi Maniruddin Ahmad, Sub-Deputy Collector, is allowed leave on average pay for one month, under rule 81 (*b*) (*ii*) of the Fundamental Rules, with effect from the 28th January 1935.

No. 891J.—22nd February 1935.—Babu Mahendra Nath De, Sub-Deputy Collector and Circle Officer, East Circle, Munshiganj, in the district of Dacca, is allowed leave on average pay from the 8th March to the 12th April 1935, under rule 81 (*b*) (*ii*) of the Fundamental Rules.

W. H. NELSON, *Commissioner.*

Mymensingh, the 21st February 1935.

Corrigendum.—No. 159C.—It is hereby notified for general information that in notification No. 20C., dated the 14th January 1935, published at page 161, Part I of the *Calcutta Gazette*, dated 24th January 1935, *read* "Mahesh Chandra De Sarker" *for* "Mahesh Chandra Sarkar" in VI—Payari union board and *read* "Nasaruddin Sarker" *for* "Nasarat Khan" in VII—Rahimganj union board under Fulpur police-station in the Sadar North subdivision of Mymensingh, appointed under section (*3*) of section 6 of the Bengal Village Self-Government Act, 1919 (Bengal Act V of 1919).

It is notified for general information that the undersigned has approved of the constitution of the managing committee of the Jamalpur Government High School as noted below for three years, with effect from 1st March 1935:—

The Subdivisional Officer, Jamalpur, President (*ex-officio*).

The Headmaster, Secretary and Vice-President (*ex-officio*).

Babu Bejoy Nath Sarkar, L.T., teachers' representative.

Khan Sahib Maulvi Syedur Rahaman, guardians' representative.

Babu Aswini Mohan Ghose, B.L., guardians' representative.

Babu Monoranjan Choudhury, Deputy Magistrate, an official other than an Inspecting Officer of the Education Department.

T. M. Dow, *District Magistrate.*

Presidency Division—Calcutta.

No. 314M.—21st February 1935.—In exercise of the power conferred by section 50 of the Bengal Municipal Act, 1932 (Bengal Act XV of 1932), it is hereby notified for general information that Mr. Malcolm McDonald and the Revd. D. A. Chowdhury, B.A., B.D., have been duly elected Chairman and Vice-Chairman, respectively, of the Budge Budge Municipality in the district of the 24-Parganas.

No. 346L.S.-G.—23rd February 1935.—The appointment of the following gentlemen to be members of the managing committee of the Nabadwip Garrett Hospital and Dispensary in the district of Nadia is published for general information, under rule 20 (*b*) of the dispensary manual:—

The Civil Surgeon, Nadia (*ex-officio*).

The Subdivisional Officer, Sadar (*ex-officio*).

The Chairman, Nabadwip Municipality (*ex-officio*).

R. Pal Choudhury, Esq.

Babu Janaranjan Roy.

Babu Annada Prasad Mukherjee.

Munshi Erfan Baksh.

Babu Kalidas Chakravarty, B.A.

Babu Sashi Bhusan Tarafder, M.A., B.T.

Babu Upendra Nath Goswami.

Babu Jagadish Chandra.

Babu Kalidas Nandi.

No. 350L.S.-G.—23rd February 1935.—The appointment of the following as members of the managing committee of the George V Male and Female Charitable Dispensary at Bhatpara in the district of the 24-Parganas is published for general information:—

Mr. A. R. MacGillivray.

Mr. E. A. Bellamy.

Maulvi Syed Mohammed Hossain.

Babu Rash Mohan Bhattacharya.,

Maulvi Latafat Hossain.

Babu Ram Parichan Singh.

Babu Ram Prosad Shaw.

Babu Moni Mohan Mukherjee.

Babu Kali Banerji.

Mr. G. S. Littlejohn.

Mrs. E. A. Bellamy.

Babu S. N. Mukherjee.

No. 439R.G.—23rd February 1935.—Maulvi Asad Hossain, Sub-Deputy Collector, Sadar, Murshidabad, is granted leave on average pay for two days, viz., 18th and 19th March 1935, under rule 81 (*b*) (*ii*) of the Fundamental Rules.

No. 444R.G.—23rd February 1935.—Maulvi Muhammad Abdus Sattar, Sub-Deputy Collector, Meherpur, Nadia, was allowed leave on half average pay from the 4th to the 10th June 1934, under rule 81 (*d*) of the Fundamental Rules.

A. J. DASH, *Commissioner (offg.)*.

Alipore, the 18th February 1935.

No. 24/35-4-V.S.-G.—It is hereby notified for general information that, under section 13 of the Bengal Village Self-Government Act, 1919 (Bengal Act V of 1919), Munshi Mahammod Ayub Ali has been duly elected to be a member of the Ghoraras union board in police-station Basirhat in the district of 24-Parganas, *vice* Munshi Jobed Ali Mondal, deceased.

S. N. RAY, *Addl. District Magistrate.*

Khulna, the 20th February 1935.

It is hereby notified for general information that, under section 13 of the Bengal Village Self-Government Act (Act V of 1919) read with rule 36 of the rules for the election and appointment of members, etc., under the said Act, Babu Satish Chandra Bagchi has been appointed by me to be a member of the Kalatala union board in police-station Mollahat in the Bagerhat subdivision of the Khulna district, *vice* Babu Kunja Behari Shaha, deceased.

B. SARKAR, *District Magistrate.*

Berhampore, the 20th February 1935.

It is hereby notified for general information that—

(*a*) Under sub-section (*2*) of section 6 of the Bengal Village Self-Government Act, 1919 (Bengal Act V of 1919), the following gentlemen have been duly elected to be members of the undermentioned union boards in Jangipur subdivision of the Murshidabad district:—

Samserganj police-station.

Bewa union board.

Babu Satish Chandra Mandal.
Babu Mahendra Nath Choudhury.
Babu Gour Gopal Mitra.
Babu Suresh Chandra Pandey.
Babu Sailesh Chandra Roy.
Munshi Golap Shaikh.

Beniagram union board.

Munshi Mir Ismail Ali.
Babu Shyamapada Choudhury.
Munshi Wajed Ali Choudhury.
Babu Jagabandhu Singh.
Munshi Mir Mokbul Hossen.
Babu Kali Kumar Mandal.

Imamnagar union board.

Ward No. I.

Munshi Makshed Ali Biswas.
Babu Bipra Charan Pandey.
Munshi Lahabari Biswas.
Babu Patiram Choudhury.

Ward No. II.

Munshi Azimaddin Biswas.
Munshi Nur Mahammad Biswas.

Arjunpur union board.

Munshi Mahiuddin Biswas.
Babu Chandra Kanta Das.
Babu Ananta Lal Das.
Munshi Kalam Biswas.
Munshi Sajiruddin Biswas.
Babu Gopesh Chandra Sarkar.

Kanchantala union board.

Ward No. I.

Munshi Tamijuddin Biswas.
Babu Sasadhar Majumdar.
Babu Panchanan Das.

Ward No. II.

Munshi Kazibulla Biswas.
Munshi Nur Mahammad Biswas.
Munshi Hanif Biswas.

Nawpara union board.

Babu Ahi Bhusan Das.
Munshi Abdul Rahaman Biswas.
Munshi Imanuddin Biswas.
Babu Sudarshan Chandra Karmakar.
Munshi Joynuddin Biswas.
Munshi Karim Baksha Biswas.

Nimtita union board.

Munshi Sabiruddin Biswas.
Babu Pitambar Das.
Maulvi Haji Mahammad Asiruddin.
Babu Lakshmi Narain Pandey.
Babu Rakhal Chandra Saha.
Babu Ramesh Chandra Roy.

Suti police-station.

Kashimnagar union board.

Munshi Inatulla Biswas.
Babu Kala Chand Saha.
Babu Mani Mohan Mandal.
Babu Haladhar Das.
Babu Bijay Bhusan Sarkar.
Babu Aswini Kumar Sarkar.

Bahutali union board.

Munshi Mokbul Mandal.
Munshi Ummar Ali Mandal.
Babu Bhairab Chandra Choudhury.
Munshi Hasmat Ali Mia.
Munshi Obedul Akbar Mia.
Munshi Maheb Hossein Khan.

Hilora union board.

Munshi Raosan Ali Shaikh.
Munshi Sayadatullah Shaikh.
Babu Bibhuti Bhusan Majumdar.
Babu Taradas Das.
Babu Haritaran Khamaru.
Babu Manindra Nath Mandal.

Maheshail union board.

Ward No. I.

Babu Gopal Chandra Das.
Babu Bhupendra Narain Sarkar.
Babu Gouranga Chandra Sarkar.

Ward No. II.

Babu Jadu Nandan Das.
Babu Ananta Lal Sarkar.
Munshi Nazir Mahammad.

Aurangabad union board.

Ward No. I.

Babu Lakshmi Narain Nath.
Babu Rajendra Narain Dutta.
Munshi Maniruddin Biswas.

Ward No. II.

Babu Bhupendra Nath Choudhury.
Babu Rama Ranjan Choudhury.
Munshi Imajuddin Biswas.

Bajitpur union board.

Munshi Hiyat Ali Shaikh.
Munshi Sherali Munshi.
Babu Hrishikesh Choudhury.
Munshi Idrish Mahammad Mandal.
Babu Trailakya Nath Choudhury.
Munshi Sajiruddin Biswas.

Nurpur union board.

Munshi Mahammad Abdur Rezzak.
Munshi Jan Mahammad Biswas.
Munshi Umedulla Biswas.
Maulvi Fayezuddin Ahmad.
Munshi Yusuf Mandal.
Munshi Abatulla Biswas.

Ahiran union board.

Babu Natabar Misra.
Babu Dhananjay Ghosh.
Babu Jogindra Narain Saha.
Babu Satish Chandra Bharati.
Babu Ramesh Chandra Das.
Babu Natabar Das.

Raghunathganj police-station.

Jamuar union board.

Ward No. I.

Munshi Mahammad Mejad Ali Mandal.
Babu Bhutnath Bhattacharjee.
Babu Abhaypada Chattopadhaya.

Ward No. II.

Babu Jatindra Mohan Roy.
Babu Ramapati Chakrabarti.
Babu Kali Prasanna Chattopadhaya.

Jarur union board.

Ward No. I.

Babu Govinda Gopal Saha.
Babu Kali Kanta Das.
Munshi Mahammad Shaikh.

Ward No. II.

Babu Sashi Bhusan Roy.
Babu Girija Bhusan Roy.
Munshi Saifuddin Mandal.

Mirzapur union board.

Munshi Abdul Rezzak.
Babu Satyendra Nath Sarkar.
Babu Kshitindra Nath Mandal.
Babu Binay Krishna Mandal.
Babu Jnanendra Nath Sarkar.
Babu Balaram Chandra Bandopadhaya.

Daffarpur union board.

Ward No. I.

Munshi Monab Mandal.
Babu Kalipada Das.
Babu Kirit Bhusan Das.

Ward No. II.

Munshi Samser Ali.
Babu Mahesh Narain Das.
Babu Lakshmi Kanta Roy.

Mithipur union board.

Ward No. I.

Babu Nabadwip Chandra Das.
Babu Jyotish Chandra Das.
Babu Nitai Mandal.

Ward No. II.

Babu Debendra Nath Das.
Munshi Nur Mahammad Biswas.
Munshi Kobad Ali.

Dayrampur union board.

Munshi Maniruddin Ahmad.
Munshi Moslem Hossain Khan.
Babu Makhan Chandra Sarkar.
Babu Jay Chand Serougi.
Babu Chaturbhuj Serougi.
Babu Kartic Chandra Sarkar.

Teghari union board.

Ward No. I.

Babu Nil Ratan Roy.
Babu Parbati Charan Roy.

Ward No. II.

Munshi Yunus Mahammad Biswas.
Babu Dolgovinda Das.

Ward No. III.

Babu Rasharaj Datta.
Babu Hemanta Kumar Sarkar.

Govindapur union board.

Babu Binay Kumar Roy.
Babu Rakhal Chandra Roy.
Munshi Abdul Gaffar Biswas.
Munshi Sajiruddin Biswas.
Munshi Abbas Ali Biswas.
Munshi Hurmat Ali Biswas.

Shekhalipur union board.

Maulana Abdul Waheb.
Munshi Yakub Biswas.
Babu Sudhangshu Bhusan Roy.
Babu Bhutnath Roy.
Babu Dwijendra Nath Roy.
Babu Aswini Kumar Roy.

Sagardighi police-station.

Bokhara union board.

Ward No. I.

Munshi Rabban Ali Mandal.
Babu Pashupati Bandopadhaya.

Ward No. II.

Babu Sripati Bhusan Pramanik.
Munshi Hiyat Mandal.

Ward No. III.

Babu Ramendra Kumar Bhattacharjee.
Munshi Bahal Mandal.

Sagardighi union board.

Munshi Mahammad Abdul Hye.
Munshi Mahammad Abdul Malek.
Munshi Mafijuddin Mandal.
Babu Bibhuti Bhusan Chakravarti.
Babu Gurupada Bandopadhaya.
Babu Ashutosh Das Biswas.

Barala union board.

Munshi Tamijuddin Mandal.
Munshi Dokari Mandal.
Munshi Mahammad Mohesan Ali.
Babu Basanta Kumar Mandal.
Babu Jogesh Chandra Mukhopadhaya.
Babu Nitya Gopal Mukhopadhaya.

Patkeldanga union board.

Munshi Faratulla Shaikh.
Sheikh Mahammad Badiazzaman.
Sheikh Kadir Baksha Sarkar.
Munshi Badiazzaman Mandal.
Babu Jashodanandan Sarkar.
Babu Nakul Chandra Das.

Balia union board.

Babu Dol Govinda Bagchi.
Babu Dhirendra Kumar Das.
Babu Kalipada Datta.
Babu Gour Krishna Sahana.
Munshi Sabdar Ali Biswas.
Munshi Amir Ali Biswas.

Manigram union board.

Munshi Erfan Biswas.
Munshi Saleh Mahammad Sheikh.
Babu Sourindra Mohan Ganguli Biswas.
Babu Nalini Kumar Choudhury.
Babu Shasti Das Bhattacharjee.
Babu Dwijapada Das.

Moregram union board.

Munshi Mahabul Mandal.
Munshi Mahammad Yad Hossain.
Munshi Kasemali Sheikh.
Babu Bibhuti Bhusan Chakrabarti.
Babu Ashutosh Chakrabarti.
Babu Kamalakshya Bandopadhaya.

Banneswar union board.

Munshi Sadiman Mandal.
Munshi Babujan Mandal.
Munshi Bahal Ali Mandal.
Munshi Mobarak Hossain.
Munshi Berasat Mandal.
Babu Jagadindra Nath Choudhury.

(*b*) Under sub-section (*3*) of section 6 of the Act, the following gentlemen have been appointed to be members of the said union boards:—

Samserganj police-station.

Bewa union board.

Babu Gokul Chandra Saha.
Munshi Ershad Ali Biswas.
Munshi Abbas Sheikh.

Beniagram union board.

Munshi Bilat Sheikh.
Munshi Ali Mahammad.
Babu Jyotish Chandra Saha.

Imamnagar union board.

Babu Gopi Nath Das.
Munshi Dost Mahammad Biswas.
Munshi Nazibuddin Biswas.

Arjunpur union board.

Maulvi Nashibulla.
Munshi Khabiruddin.
Munshi Shikdar Biswas.

Kanchantala union board.

Munshi Kutab Biswas.
Munshi Tamijuddin Biswas.
Babu Harmohan Singh.

Nawpara union board.

Munshi Rahamatulla Biswas.
Munshi Dil Mahammad Biswas.
Babu Satipada Ghosh.

Nimtita union board.

Maulvi Syed Mahammad Sajjad Sikanderjah.
Munshi Ali Mahammad Biswas.
Babu Bishnu Charan Sarkar.

Suti police-station.

Kasimnagar union board.

Munshi Isu Shaikh.
Munshi Motalim Shaikh.
Munshi Bandali Mandal.

Bahutali union board.

Babu Ramgati Ghosh.
Babu Dwijapada Mandal.
Babu Sasthi Charan Saha.

Hilora union board.

Babu Satish Chandra Mandal.
Munshi Mantaj Ali Shaikh.
Munshi Wareshali Molla.

Mahesail union board.

Babu Kishan Chandra Das.
Babu Haladhar Das.
Munshi Khetabuddin Biswas.

Aurangabad union board.

Rai Mahendra Nath Das Bahadur.
Babu Dharanidhar Das.
Munshi Sheikh Moazzam Hossain.

Bajitpur union board.

Munshi Reajuddin Biswas.
Munshi Hazrat Ali Biswas.
Maulvi Abdul Gafur.

Nurpur union board.

Babu Akrur Chandra Das.
Babu Khudiram Das.
Munshi Abdul Aziz Biswas.

Ahiran union board.

Babu Phani Bhusan Das.
Munshi Jan Mahammad Biswas.
Munshi Abdul Rahaman Biswas (Bara).

Raghunathganj police-station.

Jamuar union board.

Babu Binay Gopal Ghosh.
Babu Harihar Ghoshal.
Munshi Tohurali Mandal.

Jarur union board.

Babu Purna Chandra Mandal.
Babu Dakshina Charan Bhattacharjee.
Munshi Abujan Sheikh.

Mirzapur union board.

Munshi Matabbar Hossain.
Munshi Yakub Hossain Mandal.
Babu Purna Chandra Goswami.

Daffarpur union board.

Munshi Mahammad Musa.
Babu Haripada Saha.
Babu Haribol Mandal.

Mithipur union board.

Babu Kirti Chandra Das.
Munshi Abdul Majid Biswas.
Babu Bishnu Charan Roy.

Dayrampur union board.

Munshi Abbasali Biswas.
Munshi Abdul Majid Biswas.
Munshi Jillar Rahaman Mandal.

Teghari union board.

Munshi Samsuddin Ahmad.
Munshi Najardi Shaikh.
Maulvi Idris Hossain Biswas.

Gobindapur union board.

Babu Basanta Kumar Saha.
Babu Jadu Mandal.
Munshi Moslim Biswas.

Shekhalipur union board.

Munshi Abbas Ali Biswas.
Munshi Hareshtulla Biswas.
Babu Tincowri Upadhaya.

Sagardighi police-station.

Bokhara union board.

Munshi Joban Shaikh.
Munshi Bahar Shaikh.
Babu Sripati Bhusan Bhattacharjee.

Sagardighi union board.

Munshi Hazi Ear Mahammad Mandal.
Munshi Kazi Neoaj Hossain.
Babu Madhu Sudan Marjit.

Barala union board.

Munshi Meher Mallick.
Babu Basanta Kumar Pal.
Babu Khudiram Mandal.

Patkeldanga union board.

Munshi Haji Akbar Sarkar.
Babu Jogindra Nath Das.
Babu Nanda Kisore Mandal.

Balia union board.

Munshi Idris Ali Biswas.
Babu Tarapada Bandopadhaya.
Babu Ganapati Sarkar.

Manigram union board.

Munshi Eshahaque Sheikh.
Munshi Jillar Rahaman Molla.
Babu Nilmani Mandal.

Moregram union board.

Munshi Neaj Ali Sheikh.
Babu Suresh Chandra Mandal.
Babu Ram Ranjan Datta.

Banneswar union board.

Munshi Gumani Dewan.
Babu Phani Bhusan Das.
Babu Shyamapada Chatterjee.

Berhampore, the 24th January 1935.

Under the rules for the Managing Committees of Government High Schools (Government order No. 1123Edn., dated the 23rd August 1918), as reproduced in Section V, Chapter V, pages 198-200, of the Bengal Education Code, 1931, the following gentlemen have been appointed as members of the Managing Committee of the Nawab Bahadur's Institution, Murshidabad:—

1. The Subdivisional Officer, Lalbagh, President (*ex-officio*).
2. The Munsif of Lalbagh, official other than an Inspecting Officer of the Education Department (*ex-officio*).
3. The Head Master of the school, Vice-President and Secretary (*ex-officio*).
4. Maulvi Abdul Wajed Khan Choudhury, M.A., B.T., an elected representative of the teaching staff other than the Head Master.
5. Manager of the Estate of the Nawab Bahadur of Murshidabad (Nawab Bahadur's representative).
6. Prince Syed Kazim Ali Meerza, third son of the Nawab Bahadur of Murshidabad and Chairman, Murshidabad Municipality.

The last two non-official members (Nos. 5 and 6) are representatives of the parents and guardians of the school pupils.

The members other than the *ex-officio* members will hold office for three academic years 1935 to 1937.

O. M. REES, *District Magistrate.*

Krishnagar, the 23rd February 1935.

No. 810L.S.-G.—In pursuance of rule 32A of the Local Board Election Rules as amended in Bengal Government notification No. 2898-L. S.-G., dated the 5th July 1934, it is hereby notified for general information that the election of members for the Sadar, Kushtia, Chuadanga, Meherpur and Ranaghat local boards of the district of Nadia will be held from the 30th March 1935 to 6th April 1935.

S. BANERJEE, *District Magistrate.*

Bengal Chamber of Commerce Constituency of the Bengal Legislative Council.

Calcutta, the 28th February 1935.

Notice is hereby given under the provisions of No. 19 (*5*) of the Bengal Electoral Rules that the return of election expenses and declaration made in respect thereto with regard to his candidature for election as a representative of the Bengal Chamber of Commerce Constituency of the Bengal Legislative Council was duly lodged with me by Mr. H. G. Cooper. The return and declaration may, on payment of a fee of one rupee, be inspected on application to me at my office between the hours of 11 a.m. and 4 p.m. for one week from date.

A. C. DANIEL, *Returning Officer.*

Orders by the Deputy Inspector-General of Police, Presidency Range.

Calcutta.—No. 939-40.—16th February 1935.—Babu Phani Bhushan Gupta, officiating Inspector, Eastern Bengal Railway Police, Sealdah, is posted to Murshidabad, *vice* Babu Hira Lal Das, officiating Inspector, reverted.

Sub-Inspector Shaikh Imad Husain of the Eastern Bengal Railway Police, Sealdah, is appointed to act as Inspector, *vice* Babu Akshay Kumar Datta, Inspector, E. B. Railway Police, Sealdah, attached to the Intelligence Branch, C. I. D.

The transfer is effected in the interests of public service.

L. H. BURTON,
Deputy Inspector-General of Police.

Orders by the Deputy Inspector-General of Police, Intelligence Branch.

Calcutta.—No. 336R.O.—20th February 1935.—Babu Prabhat Ranjan Biswas, Inspector, is granted 15 days' leave on average pay in extension of the leave already granted to him.

C. E. S. FAIRWEATHER,
Deputy Inspector-General of Police (offg.).

Registered No. C207

The Calcutta Gazette

THURSDAY, FEBRUARY 28, 1935.

PART IA

Orders and Notifications by the Government of India republished for general information.

FINANCE DEPARTMENT.

NOTIFICATIONS.

New Delhi, the 14th February 1935.

No. F. 2 (8)-R. I/34.—The following Resolution by the Secretary of State for India in Council is published for general information:—

RESOLUTION.

In exercise of the powers conferred by sub-section (2) of Section 96-B of the Government of India Act, the Secretary of State, with the concurrence of a majority of votes at a meeting of the Council of India held this twenty-second day of January 1935, hereby makes the following amendments in the Fundamental Rules, namely:—

At the end of the first sentence of clause (*c*) of Rule 26 of the said rules, the following shall be added, namely:—

The period of officiating service in the higher post which counts for increment in the lower is, however, restricted to the period during which the Government servant would have officiated in the lower post but for his appointment to the higher.

No. F. 40-XIX-R. II/34.—In exercise of the powers conferred by sub-rule (2) of rule 33, rules 37 and 42 and clause (*d*) of rule 44 of the Civil Services (Classification, Control and Appeal) Rules, the Governor-General in Council hereby makes the following amendment in the Central Services (India Provident Fund) (Sterling Accounts) Rules, 1934, namely:—

For rule 14 of the said Rules the following rule shall be substituted, namely:—

14. (1) where under these rules any payment is to be made to the subscriber in sterling—

(*a*) the subscriber, prior to the date on which payment is to be made, shall send written instructions to the Account Officer intimating the place at which payment is to be made, such place being in a country where the rupee is not legal tender;

(*b*) the Account Officer, on receipt of the written instructions referred to in the preceding clause shall remit the amount through a bank for payment at the place at which payment is required.

(2) when under these rules any payment is to be made in sterling on the death of the subscriber in service to the person or persons entitled to receive the money, the Account Officer shall remit the amount through a bank for payment at the place in which payment is required by such person or persons, such place being in a country where the rupee is not legal tender.

No. F. 40-XIX-R. II/34.—The following Resolution by the Secretary of State for India in Council is published for general information:—

RESOLUTION.

IN exercise of the powers conferred by sub-section (2) of Section 96-B of the Government of India Act, the Secretary of State, with the concurrence of the majority of votes at a meeting of the Council held this 22nd day of January 1935, hereby makes the following amendment in the Superior Civil Services (India Provident Fund) (Sterling Accounts) Rules, 1934, namely:—

For rule 14 of the said Rules the following rule shall be substituted, namely:—

14. (1) where under these rules any payment is to be made to the subscriber in sterling—

(*a*) the subscriber, prior to the date on which payment is to be made, shall send written instructions to the Account Officer intimating the place at which payment is to be made, such place being in a country where the rupee is not legal tender;

(*b*) the Account Officer, on receipt of the written instructions referred to in the preceding clause shall remit the amount through a bank for payment at the place at which payment is required.

(2) when under these rules any payment is to be made in sterling on the death of the subscriber in service to the person or persons entitled to receive the money, the Account Officer shall remit the amount through a bank for payment at the place in which payment is required by such person or persons, such place being in a country where the rupee is not legal tender.

RESOLUTION.

New Delhi, the 14th February 1935.

No. F. 30 I. R. II/35.—In their Resolution No. F.-37-V. R. II., dated the 6th December 1930, the Government of India published an explanation of the method approved by His Majesty's Secretary of State for India in Council, for the calculation of the rate of interest on certain Funds. It is announced for general information that the rate of interest on deposits and also on balances at the credit of subscribers to the General Provident and other similar funds on the 31st March 1935, as determined by the approved method, is 5 per cent., and that this rate will be in force during the financial year beginning on the 1st April 1935. The funds concerned are:—

1. The General Provident Fund.
2. The Civil Engineers' Provident Fund.
3. The Finance Department Provident Fund.
4. The Police Department Provident Fund.
5. The Geological Survey Department Provident Fund.
6. The Opium Department Provident Fund.
7. The Forest Department Provident Fund.
8. The Contributory Provident Fund (India).
9. The Civil Veterinary Department Provident Fund.
10. The Madras Military Assistant Surgeons Provident Fund.
11. The Indian Civil Service Provident Fund.
12. The Indian Ordnance Department Provident Fund.
13. The Special Provident Funds on bonus or contributory terms.
14. The Indian Civil Service (Non-European Members) Provident Fund.

2. It is intended that the same rate of interest (5 per cent.) should also apply, with effect from the same date, to compulsory subscriptions and contributions and to the balances at credit of the subscribers on the 31st March 1935 in respect of the State Railway Provident Fund and the Provident Funds of the Assam Bengal, Bombay, Baroda and Central India, Burma, Bengal Nagpur, Madras and Southern Mahratta and South Indian Railways whose provident fund securities have been taken over by Government.

ORDERED that the Resolution be published in the *Gazette of India*.

P. C. TALLENTS,
Secy. to the Govt. of India.

DEPARTMENT OF INDUSTRIES AND LABOUR.

NOTIFICATION.

CIVIL AVIATION.

New Delhi, the 14th February 1935.

No. T.-65.—In pursuance of sub-section (3) of section 1 of the Indian Carriage by Air Act, 1934 (XX of 1934), the Governor-General in Council is pleased to appoint the 18th day of February 1935 as the date on which the said Act shall come into force.

D. G. MITCHELL,
Secy. to the Govt. of India.

Registered No. C207

The Calcutta Gazette

THURSDAY, FEBRUARY 28, 1935.

PART IB

Educational Notices.

The Accountancy Diploma Board, Bombay.

The 16th February 1935.

It is hereby notified that the Government of Bombay have, on the recommendation of the Accountancy Diploma Board, Bombay, awarded the Government Diploma in Accountancy to the undermentioned 21 candidates, who have passed the prescribed professional examination and received an adequate practical training in accounts. These candidates will henceforward be styled "Government Diplomates in Accountancy" and authorised to affix the letters "G.D.A." to their names:—

(507) Mr. Jayantilal Kashiram Thakkar, B. com., of Bombay.

(508) Mr. Narainlal Agarwal, B.A. (of Agra University), of Bombay.

(509) Mr. Bhaskar Anant Mehendale of Bombay.

(510) Mr. N. P. Subramanian, B.A., of Rangoon.

(511) Mr. S. Krishnamoorthy of Madras.

(512) Mr. B. Shantharama Rao, B.A., of Mangalore.

(513) Mr. S. Kaliswaran of Madura.

(514) Mr. V. S. Rajam, B.A., of Erode.

(515) Mr. P. S. Dattu Rao, B.A., B.Com., of Bangalore.

(516) Mr. K. Ramachandra Rao of Amalapuram.

(517) Mr. P. Santhanam, B.A., of Madras

(518) Mr. D. S. Subrahmaniya of Bangalore.

(519) Mr. G. S. Annaswami, B.A., of Madras.

(520) Mr. Iswar Singh Bhatty of Lahore.

(521) Mr. Biman Bhusan Sinha, B.A., of Calcutta.

(522) Mr. Profulla Sankar Banerjee, B.Sc., of Calcutta.

(523) Mr. Jatindra Mohan Pal, B.Sc., of Calcutta.

(524) Mr. Susil Kumar Mukhopadhyay of Calcutta.

(525) Mr. Mohini Mohan Das, B.Sc., of Calcutta.

(526) Mr. D. N. Venkataraman, B.A., of Rangoon.

(527) Mr. Jai Narayan Vaish, B.A., of Delhi.

M. J. ANTIA, *Secretary,*
Accountancy Diploma Board, Bombay (offg.).

Presidency Division.

NOTIFICATION.

Calcutta, the 12th February 1935.

Examination in the Art and Practice of Teaching.

An examination in the Art and Practice of Teaching for teachers of subjects taught through the medium of English employed in aided and unaided secondary schools in the Presidency Division will be held on the 12th April 1935 at Calcutta (the exact place will be notified to candidates hereafter).

The examination for teachers of all subjects taught through the medium of vernacular and oriental classical languages of secondary schools will also be held at the centres noted below on the dates mentioned against each:—

I. Krishnagar Collegiate School (for candidates from Nadia and Murshidabad districts)—8th April 1935.

II. Jessore Zilla School (for candidates from Jessore and Khulna districts)—10th April 1935.

III. A High English School at Calcutta (for candidates from Calcutta and 24-Parganas)—12th April 1935.

2. The following teachers are eligible for the examination:—

(*a*) Teachers who have passed the Entrance or Matriculation Examination or some higher examination. The examination of these teachers will be conducted through the medium of English or vernacular according to their option.

(*b*) Teachers of vernacular subjects who have passed the Middle Scholarship Examination or the terminal examination at the end of the middle stage of instruction. The examination of these teachers will be conducted only in vernacular.

(*c*) Pandits and Maulvis employed in teaching an oriental classical language other than Pandits in Sanskrit Tols and Maulvis in Madrasahs. They may be permitted to appear at this examination, and at their option may be examined either in English or in vernacular.

3. The examination will consist of—

(*a*) A practical test in class control, the candidate being required to keep a class of at least a dozen boys attentive and fully occupied throughout a lesson.

(*b*) A practical test of teaching ability, the candidate being required to give two lessons on any two of the following subjects:—

(*a*) Science, Nature Study, Hygiene, English, Bengali, History, Geography, Arithmetic, Algebra or Geometry.

(*b*) An oral test in which the Inspector of Schools or other examiners will ask questions on the art of teaching, object lesson, class management, organisation and discipline.

4. The following books are recommended for study by the candidate:—

(*a*) For teachers of English subjects:—

(*1*) Indian Teachers' Guide, by P. Wren.
(*2*) Indian School Organisation, by P. Wren.
(*3*) Suggestions for the consideration of Teachers (Board of Education, Whitehall).
(*4*) Talks to Teachers (James).
(*5*) Art of Teaching, by D. Salmon.
(*6*) Direct Method, by Tate and Rajagopalchari.

(*b*) For teachers of vernacular subjects:—

(*1*) Bibidha Bidhan, by A. N. Adhikari.
(*2*) Teachers' Manual, by Khan Bahadur Ahsanullah.
(*3*) Padtika Likhibar Paddhati, by Jagannath Dey.
(*4*) Manobijnan, by S. C. Brahmachary.
(*5*) Sikshabijnan, by Khan Bahadur Abdur Rahman Khan, M.A., B.L.

(*c*) Teachers of oriental classical languages may study any of the above sets of books.

5. Intending candidates from high schools should submit their applications through the head masters, and teachers of middle schools or junior madrasahs through the District Inspectors of Schools, so as to reach this office not later than 18th March 1935. No case will be considered if received after that date. Every candidate will be required to produce at the time of the examination the certificate of his having passed the University or other examination. The following information should accompany the application:—

(*1*) Name in full.
(*2*) Name of father (in full).
(*3*) Name of native village and district.
(*4*) Last University Examination passed.
(*5*) Year of passing.
(*6*) Period of service as a teacher.
(*7*) Present appointment with date (mention whether he is a teacher of English subject or vernacular subjects or of oriental languages). Mention also the language through the medium of which the candidate wants to be examined.
(*8*) Two classes of subjects in which he wishes to be examined.
(*9*) Signature of applicant with full address.

6. Every candidate must bring with him at the time of examination two lesson notes on the subjects in which he wishes to give lessons. These notes should be made over to the examiner at the time of the practical examination.

7. Candidates should state whether they sat for the examination previously; if so, how often, giving dates.

J. M. SEN,
Inspector of Schools, Presidency Division.

Burdwan Division.

CORRIGENDA.

Chinsura, the 21st February 1935.

In the results of the Primary (Maktab) Final Examination, 1934, published at pages 125-178, Part IB of the *Calcutta Gazette*, dated the 17th January 1935, in place of—

Asansol East Indian Railway High English School Centre.

Shilampur Upper Primary School.

Roll No.	Name	Division.
137	Mono Mohan Singha (E) ..	II

please *read*

137	Mono Mohan Sinha (E) ..	I

The following candidate, whose name appeared at page 131, Part IB of the *Calcutta Gazette*, dated the 17th January 1935, as having passed the Primary (Maktab) Final Examination, 1934, is declared to have been placed in the 2nd division :—

District Birbhum.

Nalhati Centre.

Roll No.	Name.	Division.
	Chhatima Primary School.	
9	Rampada Mondal ..	II

K. C. RAY,

Inspector of Schools, Burdwan Division.

Burdwan Division.

Chinsura, the 19th February 1935.

Results of the Moallim Training School Final Examination, 1934.

Hooghly Moallim Training School.

1	Quazi Abdul Karim	II
2	Shaikh Abdul Haque	II
3	Shaik Abdul Karim	II
4	Abul Hossain	II
5	Abdus Sattar	II
6	Shaikh Momimuddin	II
7	Abdul Kashem	II
8	Nural Hoda	II
9	Imamuddin	II
10	Hafiz Abdul Hamid	II
11	Md. Golam Mustapa	II
12	Makbul Ahmed	II
13	Osman Gani	II
14	Masud Ali	II
15	Abdul Majid (I)	II
16	Lutful Haque	I
17	Sakawat Ali	I
18	Abdul Majid (II)	II
19	Idris Ali	II
20	Welayet Hossain	II
21	Nural Islam	I
22	Momtazuddin	II
23	Khoda Newaz	II
24	Syed Md. Ali	II
25	Khondkar Azizul Haque	II
26	Khondkar Razaur Rasul	II
27	Munshi Hasibar Rahaman	II
28	Azizur Rahaman	I
29	Abdul Haque (Private)	II
30	Munshi Asraf Hossain (Private) ..	II

K. C. RAY,

Inspector of Schools, Burdwan Division.

Burdwan Division.

Chinsura, the 19th February 1935.

List of successful candidates at the Guru Training Final Examination of 1934.

I indicates first Division.

II indicates Second Division.

Burdwan District.

Katwa Guru Training School.

1	Dharmadas Konar	I
2	Umarcharan Chatterjee	I
3	Golam Goas	I
4	Pasupati Roy	I
5	Dharmadas Choudhury	II
6	Panchu Gopal Ghosh	I
7	Muktipada Rakshit	I
8	Sarat Kumar Chakravarty	II
9	Umapada Pal	I
10	Rampada Roy	II
11	Radhabinode Ghosh	II
12	Narayandas Mandal	II
13	Kalipada Sinha	I
14	Amarendra Ghosh	II
15	Khelaram Ghosh	II
16	Sanyasi Prasad Pal	I
17	Shaikh Noktar Ali	II
18	Saktipada Sarkar	II
19	Mihir Kumar Mazumdar	II
20	Juthesh Chandra Chatterjee ..	I
21	Satya Kinkar Mistri	I
22	Pankaj Baran Choudhury	I
23	Gurupada Pal	I
24	Kamal Krishna Hazra	II
25	Sambhunath Ghosh	II
26	Sambhudeb Mandal	II
27	Radhapada Ghosh	II
28	Pasupati Ghosh	II
29	Barindra Kumar Hazra	I
30	Quazi Herasatullah	II
31	Shaikh Sohrab Ali	I
32	Choudhury Abdul Hasib	II
33	Jagannath Das	II
34	Purna Chandra Ghosh	I
35	Sasadhar De	I
36	Tinkari Som	I
37	Md. Abdul Khaleque	II
38	Shaikh Habibor Rahaman	II
39	Mir Khoda Bakhsh	I
40	Jagannath Pal (Private)	II

Burdwan Guru Training School.

1	Akkas Mollah	II
2	Choudhury Abdul Quadar	I
3	Baidyanath Mukherjee	I
4	Bibhuti Bhusan Patra	I
5	Aswini Kumar Mandal ..	I
6	Amullyaratan Sain	I
7	Ramgati Chakravarty	II
8	Kisori Mohan Pal	I
9	Jagatjiban Sarkar	II
10	Saktipada Chatterjee	II
11	Rampada Chatterjee	I
12	Panchanan Thakur	II
13	Manmathanath Banerjee	II
14	Surath Chandra Majhi	II
15	Jeaul Haque (Private)	II

Mithani Guru Training School.

1	Kalipada Chatterjee	I
2	Nibaran Chandra Chatterjee ..	I
3	Umapada Gorai	I
4	Kesab Chandra Das	I
5	Divakar Patra	II
6	Gurupada Banerjee	II
7	Bhutnath Konar	I
8	Panchanan Mandal	I
9	Panchanan Mukherjee	II
10	Sarat Chandra Rana	II
11	Bankim Chandra Mukherjee ..	II
12	Kamala Kanto Sangui	II
13	Rampada Das	I
14	Khagendra Nath Misra	II
15	Panchanon Bhattacharjee	II
16	Ratinath Chatterjee	II

Suri Guru Training School.

1	Md. Abdul Esgar	II
2	Md. Mahatosin Ali	I
3	Kobad Hossain Molla	I
4	Abdul Karim	II
5	Md. Shams-uz-zoha	I
6	Banamali Sadhu	I
7	Debendra Nath Mandal	I
8	Baidyanath Das	II
9	Shaikh Habib	II
10	Indrajit Chakravarty	II
11	Shivaprasad Sinha	II
12	Ananto Lall Sarkar	II
13	Bagala Prasad Sinha	I
14	Haripada Garai	II
15	Adhar Chandra Das	II
16	Madan Mohan Pal	I
17	Satya Kinkar Mookherjee	I
18	Kalikinkar Khamaru	II
19	Baidyanath Roy	II
20	Dharanidhar Mookherjee	I
21	Shaikh Obad Ali	I
22	Bhairab Nath Ghosh	I
23	Baidyanath Mandal	I
24	Debidas Banerjee	I
25	Amarendra Nath Das	II
26	Abul Faiz	II
27	Sanyasi Charan Ganguli	I
28	Kali Charan Gope	I
29	Anadinath Sinha	II
30	Kasinath Chatterjee	II
31	Shib Kinkar Chatterjee	II
32	Shaik Esahaque Ali ..	I
33	Dukari Chandra Chatterjee Sarkar ..	II
34	Dhirendra Nath Banerjee	II
35	Nabanidhar Chatterjee	II
36	Madan Gopal Mookherjee	I
37	Ram Kinkar Nandi	I
38	Parbati Charan Roy	I
39	Mahadeb Sutradhar (Private) ..	I
40	Dakshina Ranjan Nayak (Private) ..	II

Bolpur Guru Training School.

1	Bejoy Chandra Mandal	I
2	Bhujanga Bhusan Mandal ..	II
3	Dharani Bhusan Roy	II
4	Sagar Chandra Hansa	II
5	Nityananda Sen	II
6	Shaikh Md. Saked	I
7	Abdul Aziz	I
8	Ekram Ali	I
9	Shaikh Abdul Khaleque	II
10	Kalipada Mandal	I
11	Atul Chandra Banerjee	II
12	Shaikh Abdul Mannan	II
13	Dwijapada Mandal	II
14	Bibhuti Bhusan Mandal ..	I
15	Bhujanga Bhusan Chatterji (Private) ..	II
16	Birendra Chandra Mandal (Private) ..	II

Nalhati Guru Training School.

1	Jnana Prosad Mandal	I
2	Bibhuti Bhusan Das	I
3	Abdul Aziz	I
4	Rampada Pal	I
5	Abdul Jabbar	II
6	Abdus Samad	II
7	Kanai Lal Muchi	I
8	Shib Chandra Choudhury	I
9	Shaikh Shams-uz-zoha	I
10	Shaikh Afsar Ali	I
11	Aswini Kumar Datta	II
12	Aswini Kumar Roy	I
13	Chunka Mardi	I
14	Chhutar Saran	II

Bankura Guru Training School.

1	Pravakar Nayak	I
2	Bankim Chandra Mandal	I
3	Amullya Charan Bhuia	II
4	Purnachandra Patra	I
5	Mahitosh Paladhi	I
6	Prafulla Kumar Chakravarty ..	I
7	Radhagobinda Mandal	I
8	Ramanath Mahato	I
9	Pramathanath Sinha Mahapatra ..	I
10	Sripati Charan Mahato	I
11	Prankrishna Ghosh	II
12	Bibhuti Bhusan Choudhury	I
13	Jajneswar Bag	I
14	Panchanan Patra No. 2	I
15	Lakhiram Maji	II
16	Mayapada Mukherji	I
17	Parbati Charan Kar	I
18	Madan Mohan Sinha Mahapatra ..	II
19	Nandalall Mahanti	II
20	Banka Bihari Mandal	I
21	Ashutosh Mandal	II
22	Mathur Chandra Kundu	II
23	Bhuban Mohan Akhuti	I
24	Bhuban Mohan Pyne	I
25	Radhasyam Pan	II
26	Narayandas Patra	I
27	Ramchandra Gossain	II
28	Hansadwaja Kar	I
29	Brajalall Sinha Mahapatra	II
30	Maharaj Sarma	II
31	Rajendra Nath Barik	II
32	Fakir Chandra Koley	I
33	Makhanlall Patra	I
34	Bhabatosh Datta	II
35	Kalipada Goswami	I
36	Hemchandra Chakravarty	I
37	Jyoti Lall Mahata	II

Vishnupur Guru Training School.

1	Narayan Chandra Banerjee	I
2	Kanailall Das Gupta	II
3	Durlav Chandra Betal	I
4	Dhirendra Nath Hazra	I
5	Madan Mohan Mukherjee	II
6	Sudhir Chandra Pal	II
7	Bhut Nath Ghosh	I
8	Khagapati Mandal	II
9	Bhuban Mohan Sarkar	II

Sonamukhi Guru Training School.

1	Shyamapada Mookherjee	II
2	Joy Krishna Dangar	II
3	Ashutosh Nandi	I
4	Radhagobinda Das	II
5	Atul Chandra Nandi	II
6	Pasupati Acharjya	II
7	Kripasindhu Sarkar	II
8	Basanta Kumar Banerjee	I
9	Guhiram Banerjee (Private) ..	II
10	Shayamacharan Handu (Private) ..	II
11	Harihar Misra (Private) ..	II
12	Gunadhar Mookherjee (Private) ..	II
13	Srikantha Nath Patra	II

Sarenga Guru Training School.

1	Sushil Hansda	II
2	Fagal Chandra Hansda	II
3	Ramlall Hansda	II
4	Ajit Kumar Saren	II
5	Birsing Hembram	II
6	Ashutosh Mahata	II
7	Gour Sing Mahata	II

Midnapore Guru Training School.

1	Manmatha Nath Adhikari	I
2	Nirmal Kumar Dandapat	I
3	Kshirode Chandra Mandal	I
4	Bibhuti Bhusan Kar	I
5	Satrughna Kumar Mahata	I
6	Suresh Chandra Adhikari	I
7	Bhusan Chandra Maity	I
8	Bhuban Chandra Samanta	I
9	Abinash Chandra Dhara	I
10	Sashi Bhusan Paria	I
11	Harendra Nath Das	II
12	Dharani Bhusan Das	I
13	Maheswar De	I
14	Srinibash Pramanik	I
15	Bibhuti Bhusan Samanta	I
16	Narendra Nath Mahato	I
17	Jnanendra Nath Das	I
18	Patit Paban Jana	I
19	Ashutosh Bera	I
20	Basanta Kumar Gayen	I

21	Madhusudan Bera	.. ..	I
22	Shaikh Waresh Ali	.. ..	II
23	Bholanath Ghosh	.. ..	I
24	Satish Chandra Das	.. ..	I
25	Rajani Kanta Patra	.. ..	II
26	Gajendra Nath Mandal	.. ..	II
27	Kalipada Pati	.. ..	II
28	Gopal Chandra Som	.. ..	II
29	Santosh Kumar Santra	.. ..	I
30	Himansu Sekhar Patra	.. ..	I
31	Shaikh Ataur Rahaman	.. ..	II
32	Rajkrishna Das	.. ..	II
33	Shaikh Abdul Haque	.. ..	I
34	Balkrishna Patra	.. ..	II
35	Khagendra Nath Das	.. ..	I
36	Girish Chandra Hota	.. ..	II
37	Sadhu Charan Senapati	.. ..	II
38	Petambar Dan	.. ..	II
39	Haradhan Maity (Private)	.. ..	II

Garbeta Guru Training School.

1	Dhananjoy Pramanik	.. ..	II
2	Srinibash Mahata	.. ..	I
3	Surjya Narayan Acharjya	.. ..	I
4	Bankim Behari Mandal	.. ..	I
5	Shiva Narayan Mandal	.. ..	I
6	Pitabash Jana	.. ..	II
7	Ras Behari Ata	.. ..	II
8	Bibhuti Bhusan Sow	.. ..	II
9	Janakinath Chakravarty	.. ..	II
10	Satish Chandra Baj	.. ..	II
11	Pashupati Ghosh	.. ..	II
12	Bijoy Gopal Chakravarty	.. ..	II
13	Krishnakinkar Mookherjee	.. ..	II
14	Sudhir Chandra Ghosh (Private)	..	I
15	Sital Chandra Chakravarty (Private)	..	II
16	Ashutosh Chakravarty (Private)	..	II

Nimtola Guru Training School

1	Indra Narayan Bera	.. ..	I
2	Indra Narayan Sasmal	.. ..	I
3	Satyeswar Mandal	.. ..	I
4	Priya Nath Maity	.. ..	II
5	Radhasyam Raj Pandit	.. ..	I
6	Gati Krishna Dinda	.. ..	II
7	Ras Behari Giri	.. ..	II
8	Krittibas Bhowmik	.. ..	II
9	Bhima Charan Pradhan	.. ..	I
10	Sashi Bhusan Jana	.. ..	I
11	Sudhir Chandra Pan	.. ..	I
12	Raghunath Das	.. ..	II
13	Bihari Lal Maity (Private)	..	II
14	Bhima Charan Jana (Private)	..	II

Tamluk Guru Training School.

1	Ananta Kumar Paria	.. ..	I
2	Radhagobinda Bera	.. ..	II
3	Bhutnath Dinda	.. ..	I
4	Khudiram Patra	.. ..	I
5	Bihari Lal Mapa	.. ..	II
6	Ganesh Chandra Pattanaik	.. ..	II
7	Gunadhar Jana	.. ..	II
8	Ananta Bhusan Mal	.. ..	II
9	Adwaita Charan Sing Mahapatra	..	II
10	Harakrishna Pattanaik	.. ..	I
11	Satishchandra Bhunia	.. ..	I
12	Parameswar Boal	.. ..	I
13	Bipin Behari Hazra	.. ..	I
14	Patitpaban Ghorai	.. ..	I
15	Kunjabehari Barik	.. ..	I
16	Sasadhar Santra	.. ..	II
17	Satishchandra Das	.. ..	I
18	Surendranath Bera	.. ..	II
19	Byomkesh Misra	.. ..	I
20	Nagendranath Das	.. ..	I
21	Kalipada Bhunia	.. ..	I
22	Bidhubhusan Bhowmick	.. ..	I
23	Nibaranchandra Hait	.. ..	II
24	Rasamoy Samanto	.. ..	I
25	Ramgobinda Metia	.. ..	I
26	Bhupaticharan Mandal	.. ..	I
27	Dharanidhar Maity	.. ..	I
28	Bibhutibhusan Bhunia	.. ..	I
29	Pulin Behari Das	.. ..	I
30	Bipinbehari Das	.. ..	I
31	Nilkantha Das	.. ..	II
32	Sudhansusekhar Sainik	.. ..	I
33	Radhanath Gautait	.. ..	I
34	Satishchandra Roy (Private)	..	II
35	Jnanadacharan Adhikari (Private)	..	I
36	Sridharchandra Dinda (Private)	..	I

Amarshi Guru Training School.

1	Kedarnath Pahari	.. ..	I
2	Jagannath Bera	.. ..	I
3	Amulyaprasad Sinha	.. ..	II
4	Rakhalchandra Dan	.. ..	I
5	Haradhan Bhunia	.. ..	II
6	Jagannath Maity	.. ..	I
7	Aghorechandra Misra	.. ..	I
8	Bhutnath Misra	.. ..	II
9	Abinashchandra Maity	.. ..	I
10	Gangadhar Bera	.. ..	I
11	Nilmani Giri	.. ..	II
12	Trailakyanath Guria	.. ..	I
13	Dharanidhar Ghorai	.. ..	II
14	Gunadhar Jana	.. ..	II
15	Narayanprasad Das	.. ..	II

Ilsoba Mondlai Guru Training School.

1	Prafullakumar Mitra	.. ..	I
2	Shaikh Abdul Jabbar	.. ..	I
3	Tarapada Mookherjee	.. ..	I
4	Dharanidhar Sarkar	.. ..	II
5	Bishnupada Basu	.. ..	II
6	Jagatbandhu Ghosh	.. ..	I
7	Shaikh Golam Malachi	.. ..	II
8	Saratchandra Bhattacharjee	..	II
9	Krishnachandra Ghosh	.. ..	II

Nalikul Guru Training School.

1	Purnachandra Mandal	.. ..	II
2	Manaranjan Malik	.. ..	II
3	Jagabandhu De	.. ..	II
4	Krishnachandra Manna	.. ..	I
5	Krishnachandra Patra	.. .	I
6	Homantakumar Datta	.. ..	II
7	Hrishikesh Mal	.. ..	II
8	Sudhirkumar Ganguli	.. ..	II
9	Amulyadhan Chatterjee	.. ..	II
10	Prafullakumar Biswas	.. ..	II

Goghat Guru Training School.

1	Tirthanath Ghosh	.. ..	II
2	Prankrishna Roy Pratihar	.. ..	II
3	Radharaman Roy	.. ..	II
4	Hrishikesh Sinha	.. ..	I
5	Nirapada Malakar	.. ..	II
6	Ramgati Choudhury	.. ..	I
7	Ratimohan Hazra	.. ..	I
8	Saratchandra Mandal	.. ..	II
9	Ganganarayan Adhikari (Private)	..	II

Amtala Guru Training School.

1	Faiz Ahmad	.. .. ..	II
2	Shaikh Giasuddin	.. ..	I
3	Kanai Lal Gohri	.. ..	I
4	Sudhirchandra Pal	.. ..	I
5	Shaikh Samad Ali	.. ..	I
6	Lalitmohan Chakravarty	.. ..	I
7	Gajendranath Pramanik	.. ..	I
8	Himalayachandra Khan	.. ..	I
9	Santoshkumar Biswas	.. ..	I
10	Prasadchandra Dhara	.. ..	II
11	Debendranath Bhunia	.. ..	II
12	Gostabehary Mandal	.. ..	I
13	Sontoshkumar Chakravarty	.. ..	I
14	Sudhirchandra Mandal	.. ..	II
15	Surendranath Santra	.. ..	II
16	Jyotishchandra Samanto	.. ..	I
17	Rohini Nandan Bera	.. ..	II
18	Bishnupada Khutia	.. ..	I
19	Panchanon Dhara	.. ..	I
20	Satindranath Chakravarty	.. ..	I
21	Rakhalraj Pradhan	.. ..	I
22	Bejoykrishna Das	.. ..	I
23	Bhabani Mohan Misra	.. ..	II
24	Satishchandra Bhakta	.. ..	II
25	Bepin Behary Maji	.. ..	II
26	Panchugopal Roy	. ..	I
27	Nadiabasi Pramanik	. ..	I
28	Sripaticharan Chakravarty	. ..	I
29	Paritoshkumar Haldar	. ..	I
30	Pannalall Khaura	.. ..	I
31	Shaikh Rabial Hossain	.. ..	II
32	Durjodhan Jana	.. ..	II
33	Girishchandra Jana	.. ..	II
34	Ramnarayan Dohir	.. ..	II
35	Gourmohan Chatterjee (Private)	..	II

K. C. RAY,

Inspector of Schools, Burdwan Division.

Education Department, Bengal.

NOTIFICATION.

Calcutta, the 11th February 1935.

The Prasanna Kumar Tagore Law Scholarship of Rs. 20 a month, tenable for one year with effect from 1st June 1934, is awarded to Ranendra Nath Datta, who passed the Final Law Examination held in July 1934 from the University Law College, Calcutta.

J. M. BOTTOMLEY,

Director of Public Instruction, Bengal.

Education Department, Bengal.

NOTIFICATION.

Calcutta, the 15th February 1935.

Subject to the usual conditions of good conduct and satisfactory progress, the Raj Chandra Golokmani scholarship of Rs. 8 only per month is awarded to Bhagaban Chandra Das, son of late Kali Charan Das, of village Krishna Chandra, police-station Baranaddi, district Bakarganj, who passed the Matriculation Examination held in the year 1934 from Mirzakalu High English School, for two years with effect from 1st June 1934.

The scholarship is tenable at the Brojomohan College, Barisal.

J. M. BOTTOMLEY,

Director of Public Instruction, Bengal.

Education Department, Bengal.

NOTIFICATION.

Calcutta, the 21st February 1935.

Babu Broja Mohan Dutt's prize for Indian ladies of the value of Rs. 45 only for the year 1933-34 is hereby awarded to Sree Prativamayee Gupta of 10, Indra Roy Road, post office Bhowanipore, Calcutta.

J. M. BOTTOMLEY,

Director of Public Instruction, Bengal.

ERRATUM.

Calcutta, the 19th February 1935.

In the list of successful candidates published on page 281, Part IB of the *Calcutta Gazette* of 7th February 1935, in connection with the Higher Grade Schools' Final Examination held in December 1934, *substitute* the word "Geometry" *for* "Geography" after the word "Algebra" under head "Distinction, if any" shown against the name of Gale, Henry John Denzil (*b*) of St. Thomas' Boys' School, Calcutta, No. 2 in order of merit in the Industrial Course.

R. WOLFENDEN,

Inspector of European Schools, Bengal.

Bengal Engineering College.

The 16th February 1935.

The following have passed the Bengal Local Bodies' Accountants' Examination, held by the Principal, Bengal Engineering College, in January 1935, under the sanction of letter No. 749T. L. S.-G., dated the 18th October 1921, from the Government of Bengal, Local Self-Government Department:—

Order of merit.	Name.	Address.
1	Bishwa Nath Dutt ..	C/o Executive Engineer, Damodar Canal Division, Burdwan.
2	Kumud Behari Nandi, B.A. ..	Office of the Municipal Commissioners, Dacca.
3	Srigobinda Saha, B.Sc.	Bholanath Biswesswar Academy, p. o. Ghoramara, Rajshahi.

A. MACDONALD, *Principal,*
Bengal Engineering College.

Calcutta University.

NOTIFICATION No. T. 395.

Senate House, the 12th February 1935.

Matriculation Examination, 1936.

In the list of poems prescribed to be read from "Lahiri's Select Poems" for the Matriculation Examination in 1936 (*vide* this office notification No. T. 376, dated the 21st July 1934)—

for

Doyle. The Fireman

read

Stephen Phillips. The Fireman.

J. CHAKRAVORTI, *Registrar.*

Calcutta University.

NOTICE.

Senate House, the 23rd February 1935.

The undermentioned candidate is admitted to the Degree of Doctor of Philosophy. The subject of his thesis submitted to and approved by the Board of Examiners is also stated below:—

Dhirendranath Sen.

Subject of Thesis.

The Problem of Minorities.

B. B. DUTT,
Controller of Examinations (offg.).

Government Commercial Institute, Calcutta.

NOTIFICATION.

Calcutta, the 15th February 1935.

The Government Commercial Course Final and Special Examinations, 1935, will be held at the following centres on the dates and at the hours noted below:—

Centres.

(1) The Government Commercial Institute, 11, Hastings Street, Calcutta.

(2) Commercial Academy, Dacca.

Special Examinations in Shorthand, Typewriting and Book-keeping (Junior and Advanced) only.

1st May 1935.—Final and Special Examinations in Shorthand (80, 120 and 150 words per minute)—11 a.m.

1st May 1935.—Final and Special Examinations in Shorthand (100, 140 and 160 words per minute)—2 p.m.

2nd May 1935.—Final and Special Examinations in Typewriting (Speed tests)—11 a.m.

2nd May 1935.—Special Examinations in Shorthand (180, 200 and 220 words per minute)—2 p.m.

3rd May 1935.—Final and Special Examinations in Typewriting (Tabulating tests)—11 a.m.

4th May 1935.—Final Examinations—11 a.m.

7th May 1935.—Final and Special Examinations in Junior Book-keeping—11 a.m.

7th May 1935.—Special Examination in Advanced Book-keeping 2 p.m.

8th May 1935.—Final Examinations—11 a.m.

8th May 1935.—Final Examinations—2 p.m.

9th May 1935.—Final Examinations—11 a.m.

9th May 1935.—Final Examinations—2 p.m.

10th May 1935.—Final Examinations 11 a.m.

10th May 1935.—Final Examinations—2 p.m.

11th May 1935.—Final Examinations—11 a.m.

Shorthand candidates (Final and Special Examinations) are allowed to sit for any two consecutive speed tests up to 160 words per minute. Those willing to appear for tests higher than 160 words per minute will have to apply to the undersigned direct or through affiliated institutions, on or before 14th March 1935, and will have to pay a special fee of Rs. 10 for each test up to 200 words and Rs. 25 for special test at 220 words per minute. Typewriting examinations will consist of both speed and tabulating tests. Typewriting candidates are allowed to bring their own machines for the examination.

Applications in prescribed forms available at the Institute, together with the necessary fees as under, will be received at this office on the dates and at the hours specified below:—

Fee for each subject in Special Examination for candidates from Government Commercial Institute and affiliated institutions—Rs. 5. (From 21st March to 27th March 1935 between 3 and 6 p.m.)

Fee for each subject in Special Examination from *bona-fide* private candidates—Rs. 10. (From 21st March to 28th March 1935 between 3 and 6 p.m.)

Fee for Final Examination—Rs. 8. (From 23rd April to 27th April 1935 between 12 and 2 p.m.)

N.B.—Candidates are required to bring their fee receipts with them on each day of their examination.

D. L. DUTT, *Secretary,*
Govt. Commercial Institute Board (offg.).

Presidency Division.

NOTIFICATION.

Calcutta, the 23rd February 1935.

Private candidates who have been sent up for the Matriculation Examination of 1935 by the Inspector of Schools, Presidency Division, are hereby informed that the admit cards will not be sent to them by post as already published in his notification of July 1934. But the candidates will have to call at his office to take delivery of their admit cards. They should bring with them the fee receipts granted to them by the Calcutta University. As to the dates, they should consult notices on the notice board.

AFTABUDDIN AHMED, for *Inspector of Schools.*

State Medical Faculty of Bengal.

Grosvenor House, Calcutta, the 25th February 1935.

NOTICES.

No. 309F.—The written part of the ensuing Compoundership Examination of the Faculty will be held on Monday, the 25th March 1935, at 12 noon.

The examination of candidates from the Dacca and the Lytton Medical School, Mymensingh, will be held at the Dacca Medical School and that of other candidates in the Examination Hall of the Calcutta Medical College.

The time and place for holding the oral and practical examinations will be announced later.

Applications and fees for admission to the above examination will be received in this office up to 7th March 1935.

No. 310F.—The ensuing Dressership Examination of this Faculty will be held in the following order:—

In Calcutta in the Surgical Wards of the Campbell Medical School and Hospital, on Wednesday, the 27th March 1935, at 9 a.m.

At Dacca in the Surgical Wards of the Mitford Hospital, on Saturday, the 30th March 1935, at 9 a.m.

Applications and fees for admission to the examination will be received in this office up to 7th March 1935.

No. 311F.—The written part of the examinations for the Senior and Junior Certificates in General Nursing and the Senior and Junior Certificates in Maternity Nursing will be held in the Examination Hall of the Calcutta Medical College on the following days and in the following order:—

Date.	From 11 a.m. to 2 p.m.

Senior and Junior Nursing Certificate Examinations.

1935.

Monday, 8th April ..	Anatomy, Physiology and Hygiene.
Tuesday, 9th ,, ..	General (Medical and Surgical) Nursing.

Senior and Junior Midwife Certificate Examinations.

1935.

Wednesday, 10th April	Midwifery.
Thursday, 11th ,,	Obstetrical Nursing.

The time and place for holding the oral and practical examinations in each subject will be announced later.

Applications and fees for admission to the above examinations will be received in this office up to 8th March 1935.

R. M. DAS, *Secretary.*

Orders by the Inspector of Schools, Chittagong Division.

Chittagong, the 16th February 1935.

THE following boys are awarded special Lower Primary Scholarships reserved for backward classes in the non-board areas in the Chittagong Division for the year 1934. The scholarships are tenable for one year with effect from the 1st January 1935 and are each of the value of Rs. 2 and Rs. 3 per month in plains districts and Chittagong Hill Tracts, respectively:—

	Name of boy.	Name of school.	School where the scholarship is tenable.
	District Tippera.		
1	Suresh Chandra Malo ..	Gokarna Primary School ..	Brahmanbaria M. E. School.
2	Kshetra Mohan Malo Das ..	Gridhari Free Primary School ..	Gridhari Free Primary School.
	District Chittagong.		
3	Jagabandhu Sukladas ..	Chittagong Municipal Primary School	Municipal Primary School, Chittagong.
4	Mongcha Thewe ..	Cox's Bazar Burmese Primary School	Cox's Bazar H. E. School.
	Chittagong Hill Tracts District.		
5	Ramchandra Karbari ..	Chilerdhak L. P. School ..	Rangamati Government H. E. School.
6	Dhirendra Kumar Chakma ..	Shilchari L. P. School ..	Ditto.

M. A. JAAFAR,

Inspector of Schools, Chittagong Division.

Registered No. C207

The Calcutta Gazette

THURSDAY, FEBRUARY 28, 1935.

PART II

Advertisements.

Notices.

Advertisements, Notices, etc., intended for insertion in this part of the Gazette cannot be received after noon on Saturday. All manuscripts and postal remittances must be addressed to Superintendent, Government Printing, Bengal Government Press, Alipore. For the convenience, however, of parties or firms located in Calcutta cash payments of Advertisement charges may be made at Publication Sales Office, Room No. 2, Ground Floor, Writers' Buildings, Calcutta.

Land Sale Notices.

Notification A.

NOTICE is hereby given, under section 6, Act XI of 1859, read with Act VII (B. C.) of 1868, that the undermentioned noabad taluks and izaras within the Patiya khas mahal, in the district of Chittagong, will be put up for sale at the office of the Collector of that district on the 28th March 1935, at 12 noon, for arrears of rent (and other demands which by law are realizable as arrears of rent) :—

Tauzi No.	Name of taluk with its situation.	Sadar jama.		Names of talukdars.	Balance.		
		Rent.	Cess.		Rent.	Cess.	Total.
		Rs. a. p.	Rs. a. p.		Rs. a. p.	Rs. a. p.	Rs. a. p.
6749	Keramat Ali, mauza East Dhopasari, police-station Patiya.	1,510 8 0	185 5 6	M. Abdul Aziz Chowdhury, son of Haji Abdul Samad Chowdhury, of Magnama, police-station Chakaria.	630 0 0	75 14 6	705 14 6
10152	Rahaman Ali, mauza Char Lakshya, police-station Patiya.	609 0 0	63 1 6	S. M. Ayesha Khanam, daughter of Rahaman Ali Meah, of Patharghata, police-station Town.	332 0 0	24 14 6	356 14 6
10166	Mukima Bibi, mauza Khoarnagar, police-station Patiya.	539 4 0	45 12 0	Ditto	259 4 0	25 14 0	285 2 0
14141	Osman Sadagar, mauza Ichanagar, police-station Patiya.	1,365 0 0	145 14 6	Hedayat Ali, son of Md. Pactan Malum of Agarabad, police-station Double Moorings.	771 12 0	88 11 3	960 7 3
14398	Raj Chandra Sen, mauza Ichanagar, police-station Patiya.	539 0 0	62 15 9	Ditto	344 0 0	38 7 3	382 7 3
32806	Rahaman Ali of Dangachar, police-station Patiya.	738 0 0	80 7 9	S. M. Ayesha Khanam, wife of Md. Nurer Rahaman, of Patharghata, police-station Town.	415 0 0	38 3 3	453 3 3
34793	Chailaproo of East Dhopasari, police-station Patiya.	712 8 0	98 15 3	M. Abdul Aziz Chowdhury, son of Haji Abdul Samad Chowdhury, of Maganama, police-station Chakaria.	296 0 0	41 15 6	337 15 6
35000	Ramdin Hazari of Burumchara, police-station Anwara.	2,874 12 0	325 9 3	Haji Minnat Ali Dovashi, son of Md. Hari Chowdhury, of Paschimchal.	718 8 0	81 4 0	799 12 0
35073	Rahaman Ali Meah of Dangachara, police-station Patiya.	553 0 0	62 7 6	S. M. Amaturnur Begum, wife of Apidal Alam Meah, of Patharghata, police-station Town.	280 12 0	29 7 6	310 3 6

These noabad taluks and izaras are being advertised for sale for instalments of rent and cesses due on or before the 30th November 1934. Latest date of payment was the 12th January 1935.

Chittagong, the 13th February 1935. K. G. MURSHED, Addl. Collector.

Notification A.

NOTICE is hereby given, under section 6, Act XI of 1859, read with Act VII of 1868, that the undermentioned noabad taluks and ijaras within the Satkania khas mahal, in the district of Chittagong, will be put up for sale at the office of the Collector of that district on the 29th March 1935, at 12 noon, for the arrears of rent (and other demands which by law are realisable as arrears of rent) :—

Serial No.	No. of taluk.	Name of taluk with its situation.	Names of proprietors.	Sadar jama.		Arrears.		Total.
				Rent.	Cess.	Rent.	Cess.	
				Rs. a. p.	Rs. a. p.	Rs. a. p.	Rs. a. p.	Rs. a. p.
1	32841	Mauza Pulchhari, thana Banskhali, mahal Noabad, taluk Mobarakali.	Maqbulali Chowdhury, son of Md. Sarif Miajl, of Chhorachanua, Ijjatali, son of Jafarali Chowdhury, of Pulchhari.	4,196 8 0	655 0 0	3,715 4 0	662 5 0	4,377 9 0
2	35059	Mauza Napora, thana Banskhali, mahal Noabad, taluk Rajkumar Roy.	Ijjatali Chowdhury, son of Jafarali Chowdhury, of Pulchhari.	1,395 12 0	194 14 6	1,352 4 6	223 15 9	1,576 4 3
3	32903	Mauza Sekherkhil, thana Banskhali, mahal Noabad, taluk Tazannissa.	Tajumbalali Chowdhury, son of Ashrafali Chowdhury, of Talladwip, police-station Anwara.	2,961 8 0	456 11 9	3,517 0 0	413 13 0	3,930 13 0
4	33043	Mauza Sekherkhil, thana Banskhali, mahal Noabad, taluk Abdul Majid.	Ditto	598 8 0	73 14 3	781 12 0	77 14 6	859 10 6
5	33156	Mauza Alakdia, thana Banskhali, mahal Noabad, taluk Gouri Sankar.	Bhagaban Chandra, son of Benimadhab Sen, of Saroatali, police-station Boalkhali.	733 4 0	132 15 3	711 11 6	172 12 9	884 8 3
6	33157	Mauza Gandamara, thana Banskhali, mahal Noabad, taluk Kamarali.	Jogendra Krishna, son of Sananda Chandra Roy; Nilkrishna Roy, son of Rai Nityananda Roy Bahadur, of Paradbazar, police-station Kotwali.	643 8 0	61 9 0	385 10 0	38 4 6	423 14 6
7	34542	Mauza Charati, thana Satkania, mahal Noabad, taluk Durga Priya Sen.	Satish Chandra, Jogesh Chandra and Tarak Chandra, sons of late Uma Charan Sen, of Barama, police-station Patiya.	922 8 0	67 2 9	919 8 0	70 11 0	990 3 0
8	5069	Mauza Paharchanda, thana Satkania, mahal Noabad, taluk Nilmani.	Md. Wazedali Chowdhury, son of Mahabbat Ali Chowdhury, of Jaldi.	826 8 0	99 11 9	981 3 9	137 1 9	1,118 5 6
9	5070	Mauza Paharchanda, thana Satkania, mahal Noabad, taluk Omraosingh.	Yakubali Chowdhury, son of Abdul Ali Chowdhury, of Lohagara.	514 12 0	62 6 3	473 1 0	63 7 0	536 8 0
10	5080	Mauza Dakhinputibila, thana Satkania, mahal Noabad, taluk Nilmani.	Gour Sundar, son of Basanta Ram Das, of Kalauzan.	1,010 8 0	103 9 3	760 8 3	47 7 6	807 15 9
11	5617	Mauza Charamba, thana Satkania, mahal Noabad, taluk Kalkinkar.	Nilmani, son of Debidas Chowdhury; Pranhari, son of Haradas Chowdhury, of Charamba.	2,673 0 0	367 0 0	3,091 0 0	383 15 0	3,474 15 9
12	34964	Mauza Purangar, thana Satkania, mahal Noabad, taluk Rai Sarat Ch. Das Bahadur.	Suresh Chandra, Hem Chandra, sons of Ram Kumar Chowdhury, of Dhemsha.	616 0 0	135 4 9	412 13 0	134 8 0	547 5 0

N.B.—These noabad taluks are being advertised for sale for instalments of rents and cesses due on or before the 30th November 1934, of which the latest date of payment was on the 12th January 1935.

K. G. MURSHED, Addl. Collector.

Chittagong, the 13th February 1935.

Notification A.

(Notice for sale for arrears of rent.)

NOTICE is hereby given, under section 6, Act XI of 1859, read with Act VII (B. C.) of 1868, that the undermentioned noabad taluks and ijaras within the Cox's Bazar khas mahal, in the district of Chittagong, will be put up for sale at the office of the Collector of that district on the 30th March 1935, at 12 noon, for arrears of rent and cesses (and other demands which by law are realizable as arrears of rent) :—

Serial No.	Tauzi No.	Name of mahal and pargana.	Sadar jama of the whole estate		Whether the whole estate is to be sold.	Name of proprietors of property to be sold	If the whole estate is to be sold, the arrears due from it.		
			Rent	Cess.			Rent.	Cess	Total.
			Rs a p	Rs a p.			Rs a p	Rs. a p	Rs. a p
1	5	Police-station teknaf, mauza Lengurbil, taluk Thau Choudhury	958 12 0	119 5 9	Whole ..	Keojapru, son of Challapo Choudhury, of Teknaf and others.	1,198 8 0	137 2 3	1,335 10 3
2	8	Police-station Teknaf, mauza Madhyanilla, taluk Charipoo	686 12 0	86 11 3	Do	Nagendra Lal De, son of Sasti Charan De, of Battali, police-station Anuara	396 4 0	52 12 6	449 0 6
3	17	Police-station Ukhia, mauza Haladiapalong taluk Harijugal.	3,135 0 0	476 1 3	Do	Rashik Ch. Choudhury, son of Bechuram Choudhury, of Sakpura	1,899 0 0	287 14 6	2,186 14 6
4	31	Police-station Ukhia, mauza Rumkhapalong, taluk Abdul Hakim	587 0 0	65 15 0	Do	Maymunor Rahman, son of Md Hossein Sikder, of Pagalirbill, police-station Ukhia, and others.	97 12 0	9 7 0	107 3 0
5	92	Police-station Cox's Bazar, mauza Totakkhali, taluk Jafar Ali	1,327 8 0	188 7 0	Do	Muhammad Ilias, son of Khalilar Rahman, of Uttar Masuakhali.	1,327 4 0	175 2 6	1,502 6 6
6	94	Police-station Cox's Bazar, mauza Patell Masukhali, taluk Ear Muhammad	1,065 0 0	114 10 0	Do ..	Purna Chandra, son of Brindaban Ch Pal, of Dhurung, police-station Fatickchari	739 4 0	75 9 3	814 13 3
7	99	Police-station Cox's Bazar, mauza Patell Masukhali, taluk Hari Sikder	1,137 0 0	103 4 9	Do	Aziz Ulla, son of Latif Ali Sawdagar, of Madarbari, police-station Double Moorings	1,015 0 0	98 10 0	1,113 10 0
8	101	Police-station Cox's Bazar, mauza Patell Masukhali, taluk Samad Ali	1,140 10 9	130 4 3	Do	Nur Muhammad, son of Habban Ali Choudhury, of Patelimasuakhali	1,140 2 9	120 14 9	1,261 1 6
9	107	Police-station Cox's Bazar, mauza Patell Masukhali, taluk Ajgar Ali	502 12 0	114 3 3	Do	Jagabundhu Chakrabarty, son of Biswambar Adhikary, of Cox's Bazar	262 2 0	57 11 0	319 13 0
10	121	Police-station Cox's Bazar, mauza Kharulia, taluk Khairulla	750 0 0	63 7 6	Do .	Akhileswari, wife of Kamala Kanta Sen, of Cox's Bazar.	683 2 0	52 13 9	735 15 9
11	122	Police-station Cox's Bazar, mauza Kharulia, taluk Baksa Ali	800 0 0	69 14 9	Do	Rahimannisa, wife of Muhabbat Ali Choudhury, of Jaldi, police-station Bashkhali.	897 0 0	72 14 3	969 14 3
12	138	Police-station Ramoo, mauza Chakmarkul, taluk Kalukumar Ali.	1,606 12 0	154 12 0	Do	Jagat Ch Bahaddar, son of Ramdar Bahaddar, of Rata, police-station Banskhali	1,809 4 0	153 10 9	1,962 14 9
13	153	Police-station Ramoo, mauza Nunasari, taluk Baidyanath	655 0 0	54 13 3	Do. .	Golamkibria, son of Maulvi Nazir Ali, of Uttarmitasari	560 4 0	53 14 6	614 2 6
14	165	Police-station Ramoo, mauza Uttarmitasari, taluk Rustum Ali	594 8 0	45 14 9	Do.	Badaradduza Choudhury, son of Abdul Fatta Chowdhury of Uttarmitasari	171 3 0	18 15 0	190 2 0
15	193	Police-station Ramoo, mauza Haltupi, taluk Manorama	650 0 0	71 1 9	Do ..	Golambari, son of Nazir Alf Choudhury, of Uttarmitasari, and others	325 0 0	33 14 9	358 14 9
16	207	Police-station Ramoo, mauza Ukhiarghona, taluk Indranarayan	1,022 0 0	200 13 9	Do ..	Purna Chandra Pal, son of Brindabon Pal, of Dhurung, police-station Phatickshari.	681 0 0	127 9 0	808 9 0
17	213	Police-station Chakaria, mauza Ghunia, taluk Kalusambu	516 12 0	85 0 0	Do. ..	Maulvi Sultan Ahmad, son of Maulvi Badiuzzama, of Kakhara, and others	614 12 0	38 10 0	653 6 0
18	237	Police-station Chakaria, mauza Khutakhali, taluk Moborok Ali	1,110 12 0	169 9 9	Do. ..	Jabedakhatun, wife of Haji Izzat Ali Choudhury, of Pulsari, and others, police-station Banskhali.	870 0 0	150 8 6	1,020 8 6
19	243	Police-station Cox's Bazar, mauza Choufuldandi, taluk Aman Ali.	4,711 0 0	520 13 0	Do. ..	Muzaffar Ahmad Choudhury, son of Asharaf Ali Choudhury, of Choufuldandi.	3,864 12 0	531 8 0	4,396 4 0

Serial No.	Tauzi No.	Name of mahal and pargana.	Sadar jama of the whole estate.		Whether the whole estate is to be sold.	Name of proprietors of property to be sold.	If the whole estate is to be sold, the arrears due from it.		
			Rent.	Cess.			Rent.	Cess.	Total.
			Rs. a. p.	Rs. a. p.			Rs. a. p.	Rs a. p.	Rs. a. p.
20	249	Police-station Cox's Bazar, mauza Bharuakhali, taluk Muhammad Raja.	1,518 0 0	213 7 0	Whole .	Muzaffar Ahmed Choudhury, son of Ashraf Ali Choudhury, of Choufuldandi.	1,043 12 0	169 0 9	1,212 12 9
21	250	Ditto ..	1,497 13 0	225 0 6	Do. .	Ditto ..	911 13 0	183 2 9	1,094 15 9
22	264	Police-station Ramoo, mauza Joarianala, taluk Golam Ali	744 0 0	83 5 3	Do.	Sagar Ali Bahaddar, son of Asmat Ali, of Baraduna, and others, police-station Satkania	665 0 0	72 11 3	737 11
23	273	Police-station Chakaria, mauza Palakata, taluk Ali Muhammad.	597 8 0	59 15 3	Do. ..	Makbul Ali Choudhury, son of Md. Sarif Moaji, of Chota Sanua, police-station Banskhali.	208 8 0	19 15 6	228 7 6
24	278	Police-station Chakaria, mauza Modhakassapia, taluk Ajimaddin.	895 12 0	212 3 3	Do. .	Izzat Ali Choudhury, son of Jafar Ali, of Puisari, police-station Banskhali.	897 4 0	198 0 6	1,095 4 6
25	545	Police-station Teknaf, mauza Teknaf, taluk Fate Choudhury.	2,065 7 0	310 4 0	Do. ..	Keojapru Choudhury, son of Challapru Choudhury, of Teknaf.	2,581 15 0	356 9 6	2,938 8 6
26	560	Police-station Teknaf, mauza Dakhinnilla, taluk Ishan Chandra.	3,221 0 0	312 8 3	Do. .	Chanthuai, son of Keothuai Choudhury, of Dakhinnilla, and others.	4,277 5 0	350 6 3	4,627 11 3
27	608	Police-station Teknaf, mauza Madhayanilla, taluk Hlameri.	587 4 0	88 3 3	Do ..	Changthang, son of Keothuai, of Dakhinnilla.	792 12 0	101 6 6	894 2 6
28	956	Police-station Moheskhali, mauzas Amabasyakhali and Ghatibhanga, taluk Prasanna Kumar Roy.	6,261 12 0	1,775 15 9	Do	Roy Khirod Ch. Rai Bahadur, son of Prasanna Kumer Roy, of Purbakanyara, police-station Anwara.	5,624 4 0	1,524 11 6	7,148 15 6
29	1035	Police-station Teknaf, mauza Dakhinnilla, taluk Khayumo, and others.	2,206 1 0	239 15 0	Do. ..	Monjai, son of Repuo Choudhury, of Nilla, and others.	3,309 1 0	329 14 9	3,638 15 9
30	1823	Police station Cox's Bazar, mauza Choufuldandi, taluk Durga Charan.	1,456 0 0	148 15 6	Do. ..	Khan Sahib Muzaffar Ahmed Choudhury, son of Asharaf Ali Choudhury, of Choufuldandi.	637 0 0	65 3 0	702 3 0
31	36003	Police-station Ramoo, mauza Uttarmitasari, taluk Abdul Kuddus.	603 8 0	56 0 9	Do .	Abdul Kuddus, son of Ismail Choudhury, of Uttarmitasari.	491 12 0	50 11 3	542 7 3
32	47148	Police-station Cox's Bazar, mauza Khuruskul, ijara Asharaf Ali.	615 12 0	79 5 9	Do. ..	Khan Sahib Mujaffar Ahmad Choudhury, son of Asharaf Ali Choudhury, of Choufuldandi.	154 0 0	22 5 3	176 5 3
33	878	Police-station Teknaf, mauza Dakhinnilla, ijara Sm. Khuyamo.	821 9 0	99 12 0	Do. ..	Mongjai, son of Repu Choudhury, of Nilla, and others.	1,026 13 0	114 12 6	1,141 9 6
34	1811	Police-station Ramoo, mauza Kassapia, ijara Alimadan Choudhury.	1,400 0 0	151 13 3	Do. ..	Ma. Hakim Meah, son of Ali Hosain, of Garjania, and others.	1,199 0 0	139 1 6	1,338 1 6
35	1812	Police-station Ramoo, mauza Kassapia, ijara Alimaddin Choudhury.	1,425 12 0	251 12 0	Do. ..	Abdul Sattar Sadagar, son of Abdul Gafur, of Gosaildenga, police-station Double Moorings.	888 4 0	153 0 6	1,041 4 6

These noabad taluks and ijaras are being advertised for sale for instalments of rent and cesses due on or before the 30th November 1934, of which the latest date of payment was 12th January 1935 A.D.

Chittagong, the 13th February 1935.

K. G. MURSHED, Addl. Collector.

Notification A.

NOTICE is hereby given, under sections 6 and 13, Act XI of 1859, that the undermentioned estates and shares of estates in the district of Faridpur will be put up for sale at the office of the Collector of that district on the 26th March 1935, at 11 a.m., for arrears of revenue (and other demands which by law are realisable as arrears of land revenue).

When in columns 5, 7 and 9 of the following statement it is stated that only a share is to be sold, it is to be understood that a separate account is kept for that share :—

Tauzi No.	Name of mahal and pargana.	Sadar jama of the whole estate.	Whether the whole estate is to be sold.	If only a share is to be sold, specification of such share or shares.	Names of proprietors of property to be sold.	If only a share is to be sold, the sadar jama of such share.	If the whole estate is to be sold, the arrears due from it.	If only a share is to be sold, the arrears due from it.
1	2	3	4	5	6	7	8	9
		Rs. a. p.				Rs. a. p.	Rs. a. p.	Rs. a. p.
1141	Taluk Narayanpur kismat, pargana Telihati Amirabad.	2,659 6 11	No ..	Residuary share consisting of 12 annas share only. All other shares than that specified above will be excluded from sale, viz., Separate account No. 1 of 4 annas share.	Nani Bala Dasi as guardian of minor sons Anadinath and Abani Nath Das and others.	1,994 8 11	..	555 15 0
1201	Taluk Ramchandrapur kismat, pargana Nasibahli.	2,080 6 11	Whole	....	Sourindra Mohan Guha Roy.	..	861 7 3	..
6386	Diara Taluk Bhagaban Chandra Ray and others, surplus land of kismat Bajitpur, pargana Tarpe Kamrapur.	730 0 0	Do. ..	....	Jogendra Chandra Guha Ray.	..	730 0 0	..
6447	Taluk Raja Harish Chandra Chaudhury, surplus land of Nemua known as Sakhipur kismat resumed by Deara, pargana Ranvawal Tappa.	977 0 0	Do. ..	....	Jogamaya *alias* Indra Bala Chaudhurani.	..	973 0 0	..
6449	Deara Taluk Rajbehari Roy, surplus land of Dotali Lafti *alias* Bhaga kismat, pargana Karticpur Sujabad.	1,555 0 0	Do. ..	....	Munshi Mesbahauddin Ahammed Choudhury, self and as trustee.	..	2,024 8 0	..
6498	Deara Taluk Madan Mohan Banerjee, alluvial accretion to Mahiskhali Char, pargana Nasti.	2,293 0 0	Do. ..	....	Madan Mohan Banerjee	..	1,195 0 0	..
6504	Deara Taluk Golam Ahmed Choudhury, alluvial accretion to Char Dubail resumed by Deara, pargana Jalalpur.	2,662 0 0	Do ..	....	Gobinda Lall Mukhopadhay.	..	600 0 0	..
6604	Taluk Char Chanda I, pargana Amirabad.	1,137 0 0	Do. ..	....	Jogamaya *alias* Indrabala Devi Chaudhurani.	..	814 12 0	..
7165	Taluk Ananta Deb Ray, by partition Narendra Nath Basak and others, pargana Baikunthapur.	784 6 0	Do. ..	....	Sasabindu Nath Basak and others.	..	294 3 0	..

N.B.—This notification is issued in respect of instalments of revenue due on or before the 30th Agrahyan 1341 B.S., of which the latest date of payment was 12th January 1935.

Faridpur, the 14th February 1935. [ILLEGIBLE], *for* Collector.

Notification A.

NOTICE is hereby given, under sections 6 and 13, Act XI of 1859, that the undermentioned estates in the district of Chittagong will be put up for sale at the office of the Collector of that district on the 22nd March 1935, at 12 noon, for arrears of revenue and other demands which by law are realisable as arrears of land revenue.

When in columns 5, 7 and 9 of the following statement it is stated that only a share is to be sold, it is to be understood that a separate account is kept for that share:—

Tauzi No	Name of mahal and pargana.	Sadar jama of whole estate.	Whether the whole estate is to be sold.	If only a share is to be sold, specification of such share or shares.	Names of proprietors of property to be sold.	If only a share is to be sold, the sadar jama of such share.	If the whole estate is to be sold, the arrears due from it.	If only a share is to be sold, the arrears due from it.
1	2	3	4	5	6	7	8	9
		Rs. a. p.				Rs. a. p.	Rs. a. p.	Rs. a. p.
55	Thanas Hathazari, Raozan and Town, taraf Aziz Nasarath.	791 12 0	Whole	....	Surendra Lal Das and others.	..	725 11 11	..
57	Thanas Hathazari, Fatickchari and Patiya, taraf R. D. Baruz.	10,573 15 0	Do. ..	....	Raj Upendra Lal Roy Bahadur and others.	..	1,988 13 0	..
64	Thana Fatickchari, Nilam Anandi Manullah.	1,160 0 3	Do. ..	....	Sachindra Nath Nandi and others.	..	688 14 3	..
388	Thanas Sitakund and Town, taraf Ahamedullah and Nasarullah.	729 6 0	Do. ..	....	Abdul Gani Chowdhury.	..	263 11 0	..
396	Thanas Sitakund and Raozan, taraf Baksha Ali.	935 14 0	Do. ..	....	S. M. Shafianissa Chowdhury and others.	..	245 8 4	..
486	Thana Fatickchari, taraf Barahi Charan.	502 9 3	Do. ..	....	Abdul Bari Chowdhury.	..	353 6 3	..
519	Thana Mireswari, taraf Bijoy Narayan.	566 0 1	Do. ..	....	Abinash Ch. Deb Chowdhury and others.	..	156 7 6	..
522	Thanas Mireswari, Ramoo, Town, Sitakund, Banskhali, Satkania, Anwara and Fatickchari, kismat Biswasari, Bt. taraf Gouri Sankar Kanungoe.	1,221 11 0	Do. ..	....	Faiz Ali Chowdhury and others.	..	356 11 0	..
589	Thanas Patiya, Town and Hathazari, Nilam Bhuban Mohan.	1,419 5 0	Share	Residuary share with an interest of 15 as. 10 k. 8 21666/42911 kt. (All other shares than that specified will be excluded from sale.)	Uzir Ali ..	1,407 13 6	..	1,445 9 10
669	Thanas Patiya, Satkania and Hathazari, taraf Chatra Narayan Kanungoe.	840 10 4	Do. ..	Residuary share with an interest of 12 as. 2k. 14 598/807kt. (All other shares than that specified will be excluded from sale.)	Kali Mohan Saha and others.	642 7 11	..	503 4 11
746	Thana Mireswari, taraf Chifi Doulat.	2,904 10 10	Whole	....	Shek Abul Basar Md. Sayasta Khan.	..	1,660 10 10	..
764	Thanas Hathazari, Patiya, Raozan and Town, taraf Darpa Narayan.	2,902 9 0	Do. ..	....	Jagabandhu Mahajan and others.	..	513 6 1	..
834	Thana Raozan, taraf Debi Sing.	1,103 3 0	Do. ..	....	Shew Dayal Singh Hazari and others.	..	855 2 9	..
942	Thana Fatickchari, Nilam Fakir Chand.	646 14 0	Do. ..	....	Abdul Bari Chowdhury and others.	..	293 1 8	..
943	Thana Raozan, taraf Fateh Singh.	2,268 5 0	Do. ..	....	Promoda Ranjan Dutta, Receiver on behalf of the estate Ram Din Hazari.	..	5,081 12 0	..
1099	Thanas, Town, Patiya, Satkania, Hathazari, Fatickchari, Raozan, Mireswari and Sitakund, taraf Gouri Charan Kanungoe.	2,321 9 0	Do. ..	....	Dipchand Chowdhury and ohers.	..	1,991 9 0	..
1100	Thanas Patiya, Fatickchari, Satkania, Raozan, Town, Mireswari, and Hathazari, taraf Gouri Sankar.	1,232 3 2	Share ..	Residuary share with an interest of 11 as. 5 g. 3 c. 1 k. 6 til. (All other shares than that specified will be excluded from sale.)	Amiya Krishna Roy and others.	868 7 8	..	825 4 8

Tauzi No.	Name of mahal and pargana.	Sadar jama of whole estate.	Whether the whole estate is to be sold.	If only a share is to be sold, specification of such share or shares.	Names of proprietors of property to be be sold.	If only a share is to be sold, the sadar jama of such share.	If the whole estate is to be sold, the arrears due from it.	If only a share is to be sold, the arrears due from it.
1	2	3	4	5	6	7	8	9
		Rs. a. p.				Rs. a. p.	Rs. a. p.	Rs. a. p.
1116	Thanas Fatickchari and Town, taraf Ghanashyan Kanungoe.	1,670 11 6	Whole	....	Makhalasar Rahaman Chowdhury.	..	757 1 6	..
1121	Thanas Patiya, Raozan, Town and Satkania, taraf Hari Har Kanungoe.	973 1 0	Do. ..	....	Keshab Ch. Bhattacharji and others.	..	236 10 3	..
1145	Thana Mireswari, taraf Hasan Rahaman Beg.	711 5 3	Do. ..	....	Makhaluk Rahaman Chowdhury and others.	..	210 11 7	..
1218	Thanas Hathazari, Patiya, Raozan and Town, Kismat Henry, south of Edward Market and Bibi Barjins Buruz, Bt. taraf Ishan Ch. Kanungoe.	1,447 9 0	Share ..	Residuary share with an interest of 8 annas. (All other shares than that specified will be excluded from sale.)	Surendra Lal Das and others.	723 13 2	..	662 13 2
1238	Thanas Patiya, Hathazari, Raozan and Town, taraf Imas Ayap.	2,265 15 8	Do.	Residuary share with an interest of 9 as. 6 p. 19 kt. (All other shares than that specified will be excluded from sale.)	Sadak Ali Munshi and others.	1,354 8 7	..	797 14 7
1242	Thanas Satkania, C. S. Banskhali, Patiya, C. S. Anwara, taraf Imam Baksha.	697 0 6	Whole	....	Ijjatali Chowdhury.	..	696 14 5	..
1270	Thanas Satkania and Patiya, taraf Joyram Chowdhury.	1,416 5 6	Share	Residuary share with an interest of 4 as. 3 p. 3 kt. Share No. 2 with an interest of 3 as. 8 p. 17 kt. (All other shares than those specified will be excluded from sale.)	Sm. Kusum Kamini Gupta. Rashid Ahmed and others.	Residue— 377 5 2 Share No. 2— 330 13 7 708 2 9	..	Residue— 384 14 2 Share No. 2— 165 0 0 549 14 2
1282	Thanas Town, Patiya, Satkania, Ramoo, Hathazari and Fatickchari, taraf Jabardasta Khan.	6,529 8 0	Whole	....	Birendra Krishna Roy Chowdhury and others.	.	3,730 1 3	..
1285	Thana Mireswari, taraf Jarip Mahammad	783 12 6	Do.	....	Nalini Ranjan Roy Chowdhury and others.	.	842 9 4	..
1363	Thanas Town, Mireswari and Sitakund, taraf Jadumadan.	1,205 14 0	Share	Share No. 1 with an interest of 7 as. 6 p. 15 kt. (All other shares than that specified will be excluded from sale.)	Harendra Kumar Roy Chowdhury.	571 14 5	..	523 14 8
1469	Thanas Satkania and Patiya, taraf Kumar Kully.	1,015 13 0	Whole	....	Emdad Ahamed Chowdhury and others.	..	950 5 2	..
1671	Thanas Patiya and Raozan, taraf Keoza Howa Shang.	1,127 12 7	Do.	....	Syedar Rahaman Sadagar.	..	1,127 12 6	..
1714	Thanas Hathazari, Town and Mireswari, Nilam Lakshmi Narayan.	1,197 15 0	Share	Residuary share with an interest of 11 as. 0 p. 18 kt. Share No. 1 with an interest of 2 as. 1 p. 1 kt. Share No. 2 with an interest of 2 as. 1 p. 1 kt. (All other shares than those specified will be excluded from sale.)	Sarada Charan Naha. Shek Ebadulla Chowdhury. Shek Mahammad Habibullah Meah and others.	Residue— 885 10 9 Share No. 1— 156 10 0 Share No. 2— 155 10 3 1,197 15 0	.. .. ..	Residue— 200 10 11 Share No. 1— 70 13 3 Share No. 2— 18 12 0 299 4 11
1747	Thanas Hathazari, Patiya, Town and Raozan, taraf Monohar Roy.	2,486 12 9	Do. ..	Residuary share with an interest of 8 p. 4½kt. Share No. 2 with an interest of 4p. 7½kt. Share No. 3 with an interest of 3as. 3p. 5kt. (All other shares than those specified will be excluded from sale.)	Girish Ch. Ghosh Surendra Lal Chakraborty. Amarendra Krishna Roy and others.	Residue— 106 10 0 Share No. 2— 56 12 1 Share No. 3— 508 14 9 672 4 10	.. .. ..	Residue— 79 4 0 Share No. 2— 42 15 0 Share No. 3— 465 14 9 586 1 9

Tauzi No.	Name of mahal and pargana.	Sadar jama of whole estate.	Whether the whole estate is to be sold.	If only a share is to be sold, specification of such share or shares.	Names of proprietors of property to be sold.	If only a share is to be sold, the sadar jama of such share.	If the whole estate is to be sold, the arrears due from it.	If only a share is to be sold, the arrears due from it.
1	2	3	4	5	6	7	8	9
		Rs. a. p.				Rs. a. p.	Rs. a. p.	Rs. a. p.
1884	Thana Fatickchari, taraf Mahammad Sana Mir.	785 10 3	Whole	....	Purna Ch. Pal ..	..	785 10 2	..
1887	Thanas Fatickchari, and Hathazari, taraf Md. Raja Mir.	540 6 6	Do. ..	....	Nazab Ali Chowdhury and others.	..	288 7 1	..
1889	Thanas Hathazari and Raozan, taraf Mahammad Safi Nazir.	548 13 0	Do. ..	....	Sachindra Nath Nandi and others.	..	52 2 4	..
2099	Thanas Sitakund, Hathazari, Banskhali, Satkania, Patiya, Town, Mireswari and Anwara, Kismat Murari Dhar Kanungoe and Nil Kamal Sen, Bt. taraf Gouri Sankar Kanungoe.	1,220 9 0	Share	Share No. 4 with an interest of 14gds. 1c. Share No. 6 with an interest of 8gds. 2c. 10til. Share No. 7 with an interest of 1a. 5g. 1k. 10 til. Share No. 8 with an interest of 6 as. 3 g. 2 c. 1 k. 15 til. (All other shares than those specified will be excluded from sale.)	Kishori Mohan Dutta and others. Upendra Krishna Roy. Srijucta Kusumkumari Gupta. Manasha Charan Dhar.	Share No 4— 57 9 9 Share No. 6— 12 15 9 Share No. 7— 96 9 0 Share No. 8— 475 5 0 642 7 6	.. ..	Share No. 4— 21 3 5 Share No. 6— 5 14 7 Share No. 7— 88 9 0 Share No. 8— 237 10 6 353 5 6
2203	Thanas Raozan and Town, taraf Nasim Chowdhury.	659 7 6	Do. ..	Residuary share with an interest of 8 as. 9 p. 12 kt. Share No. 1 with an interest of 6 annas. (All other shares than those specified will be excluded from sale.)	Nil Krishna Roy Durjuti Kumar Dutta and others.	Residue— 362 11 4 Share No. 1— 247 4 11 610 0 3	.. ..	Residue— 344 9 2 Share No. 1— 173 13 7 518 6 9
2349	Thanas Hathazari, Raozan, Patiya and Satkania, taraf Utshab Ram Chowdhury.	720 13 0	Whole	....	Ramesh Ch. Chowdhury and others.	..	61 5 0	..
2432	Thanas Hathazari, Patiya, Raozan, Town, Fatickchari and Anwara, Kismat Pran Krishna, Gopi Mohan, Guru Das, Hara Das Roy, Bt. taraf Jugal Kishore	3,352 7 0	Share	Residuary share with an interest of 10 as. 4 p. 19⅛ kt. Share No. 6 with an interest of 6 p. 14¼ kt. Share No. 9 with an interest of 1 p. 8 kt. Share No. 15 with an interest of 1 p. 14¼ kt. Share No. 16 with an interest of 1 p. 14¼ kt. Share No. 17 with an interest of 1 p. 11 3015/5616 kt. Share No. 18 with an interest of 1p. Share No. 19 with an interest of 3 p. 7 kt. Share No. 20 with an interest of 1 p. 18 kt. Share No. 21 with an interest of 18¾kt. (All other shares than those specified will be excluded from sale.)	Kumar Sarat Kumar Roy. Mukhada Ranjan Roy. Sailendra Krishna Roy. Sarat Ch. Sarkar and others.	Residue— 2,182 10 6 Share No. 6— 117 1 6 Share No. 9— 24 8 0 Share No. 15— 20 14 3 Share No. 16— 30 14 6 Share No. 17— 27 15 0 Share No. 18— 17 7 11 Share No. 19— 58 2 3 Share No. 20— 33 2 7 Share No. 21— 16 2 10 2,537 15 4	..	Residue— 1,406 15 5 Share No. 6— 20 0 1 Share No. 9— 41 0 9 Share No. 15— 28 3 1 Share No. 16— 29 2 4 Share No.17— 14 13 6 Share No. 18— 16 7 11 Share No. 19— 54 5 1 Share No. 20— 31 5 7 Share No. 21— 15 3 8 1,666 9 5
2433	Thanas Fatickchari, Hathazari, Raozan, C. S. Hathazari, Patiya, Town and Anwara, taraf Pran Ballav.	944 5 5	Whole	....	Surendra Lal Chowdhury.	..	407 11 3	..
2467	Thanas Satkania and Patiya, taraf Rahaman Talip.	601 10 0	Do ..	....	Shek Makbul Ali Chowdhury.	..	42 15 5	..
2544	Thanas Patiya, Hathazari, Raozan and Town, taraf Ram Mohan Sen.	883 6 0	Do. ..	....	Hazi Asharaf Ali Sawdagar.	..	883 6 0	..
2553	Thanas Patiya, Raozan and Satkania, taraf Raj Ballav Kanungoe.	698 9 9	Do. ..	....	Kali Mohan Saha and others.	..	663 9 8	..

Tauzi No.	Name of mahal and pargana.	Sadar jama of whole estate.	Whether the whole estate is to be sold.	If only a share is to be sold, specification of such share or shares.	Names of proprietors of property to be sold.	If only a share is to be sold, the sadar jama of such share.	If the whole estate is to be sold, the arrears due from it.	If only a share is to be sold, the arrears due from it.
1	2	3	4	5	6	7	8	9
		Rs. a. p.				Rs. a. p.	Rs. a. p.	Rs. a. p.
2554	Thanas Chakaria, Patiya, Town and Raozan, taraf Ram Sundar Kanungoe.	849 6 6	Whole ..	....	Jinnat Ali Chowdhury and others.	..	795 14 0	..
2556	Thanas Fatickchari, Hathazari, Raozan, Patiya and Town, taraf Raghab Manuhar Kanungoe.	1,035 8 0	Share ..	Residuary share with an interest of 6as. 7p. 10kt.	Manindra Nath Biswas and others.	Residue— 429 12 11	..	Residue— 0 3 6
				Share No. 4 with an interest of 3as. 8p. 2kt.		Share No. 4— 239 12 0		Share No. 4— 234 14 10
				(All other shares than those specified will be excluded from sale.)		669 8 11		235 2 4
2567	Thana Raozan, taraf Raj Jugal Kishore Nanda Kishore Nandi.	570 9 0	Whole	....	Suresh Chandra and others.	..	216 3 3	..
2860	Thanas Patiya, Raozan, Fatickchari, Satkania, Sitakund, Mireswari, Anwara, Hathazari and Chakaria, taraf Shambhoo Ram Kanungoe.	4,210 4 0	Share ..	Share No. 2 with an interest of 8as. 7p. 3kt.	Ram Chandra Sukul.	Share No. 2— 2,259 8 4	..	Share No. 2— 1,138 11 7
				Share No. 4 with an interest of 1 kt.	Rasik Ch. Sen ..	Share No. 4— 1 1 7		Share No. 4— 1 1 7
				Share No. 6 with an interest of 2as. 3p. 11 kt.	Aswini Kumar Saha and others.	Share No. 6— 603 11 1		Share No. 6— 552 10 7
				(All other shares than those specified will be excluded from sale.)		2,864 5 0		1,692 7 9
2561	Thanas Raozan, Hathazari and Patiya, taraf Sadaram Chowdhury.	1,097 2 9	Do. ..	Residuary share with an interest of 8 kt.	Ali Ahmed Chowdhuri.	Residue— 1 11 8	..	Residue— 0 7 8
				Share No. 1 with an interest of 7as. 11p. 16kt.	Jogesh Ch. Dhar and others.	Share No. 1— 548 0 0		Share No. 1— 318 14 10
				(All other shares than those specified will be excluded from sale.)		549 11 8		319 6 6
3054	Thanas Raozan, Hathazari, Patiya, Town and Fatickchari, taraf Shib Durga Charan Chowdhury.	2,042 0 0	Do. ..	Share No. 2 with an interest of 3as. 4p. 19kt.	Kamal Kumar Roy.	Share No. 2— 628 1 10	..	Share No. 2— 708 12 9
				Share No. 9 with an interest of 2p. 2kt.	Rajchandra Dhar	Share No. 9— 32 3 0		Share No. 9— 8 8 3
				Share No. 15 with an interest of 1a. 9p. 5kt.	Amarendra Krishna Roy and others.	Share No. 15— 325 9 11		Share No. 15— 300 9 10
				(All other shares than those specified will be excluded from sale.)		985 14 9		1,017 14 10
3056	Thanas Patiya and Satkania, taraf Sitadal Pada.	1,345 10 0	Do. ..	Residuary share with an interest of 12as. 7g. 2c. 13kt.	Jagadish Narayan Baspai.	Residue— 1,057 15 0	..	Residue— 165 11 11
				Share No. 1 with an interest of 3as 4g. 17c. 7kt.	Mulchandra Dichit.	Share No. 1— 287 11 0		Share No. 1— 329 11 0
						1,345 10 0		495 6 11
3093	Thanas Rangunia and Chakaria, taraf Sukdeb Roy.	2,541 7 11	Whole	....	Raja Bhuban Mohan Roy.	..	649 15 10	..
3113	Thana Chakaria, taraf Shermat Khan Chowdhuri.	527 6 6	Share ..	Residuary share with an interest of 7as. 4p.	Gura Meah Chowdhuri.	Residue— 241 3 0	..	Residue— 235 3 8
				Share No. 1 with an interest of 5 annas.	Maulvi Sultan Ahmed and others.	Share No. 1— 165 10 0		Share No. 1— 124 3 9
				Share No. 2 with an interest of 3as. 8p.		Share No. 2— 120 9 6		Share No. 2— 112 13 4
						527 6 6		472 4 9
3171	Thana Fatickchari, taraf Tita Tewari.	1,495 6 9	Whole	....	Abdul Bari Chowdhury.	..	1,701 6 0	..
3193	Thanas Satkania, Fatickchari, Hathazari, Raozan and Patiya, taraf Taj Singh Hazari.	9,561 13 0	Do. ..	....	Babu Bhupendra Krishna Ghose.	..	8,172 13 0	..

Touzi No.	Name of mahal and pargana.	Sadar jama of whole estate.	Whether the whole estate is to be sold.	If only a share is to be sold, specification of such share or shares.	Names of proprietors of property to be sold.	If only a share is to be sold, the sadar jama of such share.	If the whole estate is to be sold, the arrears due from it.	If only a share is to be sold, the arrears due from it.
1	2	3	4	5	6	7	8	9
		Rs. a. p.				Rs. a. p.	Rs. a. p.	Rs. a. p
3035	Thanas Fatickchari, Hathazari, Raozan, Satkania and Town, taraf Radha Madhab.	1,810 0 4	Share	Share No. 2 with an interest of 10 p. Share No. 5 with an interest of 3 as. 7 p. 1 kt. (All other shares than those specified will be excluded from sale.)	Tajendra Ch. Dhar Nilkrishna Roy ..	Share No. 2— 98 0 10 Share No. 5— 414 0 0 512 0 10	..	Share No. 2— 42 14 0 Share No. 5— 320 2 10 373 0 10
33049	Thana Chakaria, mauza Manikpur, taluk Tufanali Munshi.	803 4 0	Whole	....	Sm. Golchair Begum and others.	..	384 4 0	..
33294	Thana Chakaria, mauza Harbang, taluk Mobarek Ali, Bt. taluk Chandi Charan and Tarini Charan.	874 0 6	Do. ..	....	Maulvi Md. Soleman Khan.	..	1,088 5 3	..
33673	Thana Satkania, mauza Silkope, Kaimi Zamidari Anwar Ali, s/o Hasan Ali Chowdhuri, of Burumchara, Bt. Izara Aman Ali.	617 5 0	Do. ..	....	Darbeshali Chowdhury.	..	559 4 11	
33872	Thanas Town, Hathazari, Fatickchari and Patiya, Kismat Pran Krishna Roy, Bt. taraf Jugal Kishore.	1,611 11 0	Share	Residuary share with an interest of 4 annas. Share No. 1 with an interest of 14 gds. 1 c. Share No. 2 with an interest of 1 a. 1 g. 1 c. 2 kt. 10 til. Share No. 3 with an interest of 14 gds. 1 c. (All other shares than those specified will be excluded from sale.)	Mukunda Ranjan Roy. Nagendra Nath Singh. Rasik Ch. Chowdhury and others.	Residue— 403 7 2 Share No. 1— 71 11 1 Share No. 2— 108 0 2 Share No. 3— 71 11 1 654 13 6	..	Residue— 189 15 11 Share No. 1— 71 11 0 Share No. 2— 108 0 1 Share No. 3— 71 10 11 441 5 11

These estates are being advertised for sale for instalments of revenue which were due on or before the 30th Agrahayan, 1341 B.S., of which the latest date of payment was 12th January 1935.

Chittagong, the 14th February 1935.

K. G. MURSHED, Addl. Collector.

Notification A.

NOTICE is hereby given under sections 6 and 13 of Act XI of 1859 that the under-mentioned estates and shares of estates in the district of Jessore will be put up to sale at the office of the Collector of that district on the 25th day of March 1935 at 12 noon for arrears of revenue (and other demands which by law are realizable as arrears of land revenue).

These estates are being advertised for sale for instalments of revenue which were due on or before the 30th of Agrahayan, 1341B.S., of which the latest day of payment was the 12th January 1935.

When in columns 5, 7 and 9 of the following statement it is stated that only a share is to be sold, it is to be understood that a separate account is kept for that share ;—

Tauzi number.	Name of mahal and pargana.	Sadar jama of whole estate.	Whether the whole estate is to be sold.	If only a share is to be sold, specification of such share.	Names of proprietors of property to be sold.	If only a share is to be sold, the sadar jama of such estate.	If the whole estate is to be sold, the arrears due from it.	If only a share is to be sold, the arrears due from it.
1	2	3	4	5	6	7	8	9
		Rs. a. p.				Rs. a. p.	Rs. a. p.	Rs. a. p.
2	Kharija taluk Arua Kandi, pargana Mahmudshahi.	584 12 10	Whole	....	Nuruddin Ahmad Biswas and others.	..	200 6 10	..
66	Kharija taluk Taraf Dudsar, pargana Mahmudshahi.	2,640 0 5½	Share No. 3.	4 annas only. All other shares except that specified will be excluded from sale.	Mohen Bala Dasi ..	662 4 2	..	37 15 1
71	Zamindari Ishofpur Amirabad, pargana Isofpur Amirabad.	14,993 10 9	Whole	..	Babu Dhirendra Nath Rai, surviving executor to the estate of late Jogendra Nath Rai.	..	20,810 5 1	..
74	Zamindari Emadpur, pargana Emadpur.	4,188 15 1½	Do. ..	..	Saraju Bala Sarkar and others.	..	789 12 5½	..
125	Kharija taluk Joradah, pargana Mallikpur.	5,895 0 1	Share No. 1.	17 gandas 2 karas 2 crantis 7 tils. All other shares except that specified will be excluded from sale.	Hemangini Debya, jointly with Hemangini Debya, executrix to the estate of her late husband Keshab Chandra Deb Roy, mother guardian of Jnanendra Nath Deb Roy and another. A. P. Babu H. C. Bose for Sasanka Sekhar Majumder.	330 11 4	..	71 11 3
125	Ditto ..	5,895 0 1	Share No. 2.	4 annas 9 gandas 1 kara 1 cranti 10 tils. All other shares except that specified will be excluded from sale.	Rashamoyee Shaha and others.	1,641 1 4	..	335 6 7
125	Ditto ..	5,895 0 1	Share No. 5.	4 annas 5 gandas 13 tils only. All other shares except that specified will be excluded from sale.	Girija Bhusan Deb Roy.	1,567 6 9	..	370 3 6
228	Kharija taluk Panami, 2 pargana Mahammadshahi.	1,520 1 2	Whole	..	Mr. S. N. Mukherjee, official liquidator to Karatipara Majumdar Estate, Ltd.	..	395 5 11	..
247	Kharija taluk Rakra Taraf, pargana Mahmudshahi.	4,847 8 5	Share No. 0.	8 annas only. All other shares except that specified will be excluded from sale.	Profulla Chandra Ghosh Chaudhuri and others.	2,423 12 2	..	785 0 0
257	Kharija taluk Shyamnagar, pargana Isofpur.	526 0 0	Whole	..	Nava Krishna Roy	..	145 15 0	..
261	Kharija taluk Saganna, pargana Mahmudshahi.	1,596 8 9	Share No. 0.	11 annas only .. All other shares except that specified will be excluded from sale.	Nagendra Narayan Roy.	1,097 10 0	..	330 10 4
261	Ditto ..	1,596 8 9	Share No. 1.	5 annas only All other shares except that specified will be excluded from sale.	Nityapada Pandey, A. P. Phani Bhusan Nandi.	498 14 9	..	150 4 8
274	Zamindari Sreepadguha, pargana Sreepadguha.	2,816 5 8	Share No. 2.	3 annas only .. All other shares except that specified will be excluded from sale	Protiva Sundari Debi	528 1 0	..	304 15 1

Tauzi number.	Name of mahal and pargana.	Sadar jama of whole estate.	Whether the whole estate is to be sold.	If only a share is to be sold, specification of such share.	Names of proprietors of property to be sold.	If only a share is to be sold, the sadar jama of such estate.	If the whole estate is to be sold, the arrears due from it.	If only a share is to be sold, the arrears due from it.
1	2	3	4	5	6	7	8	9
		Rs. a. p.				Rs. a. p.	Rs. a. p.	Rs. a. p.
4819	Zamindari Dihi Ransbaria, pargana Mulghar.	3,508 8 11	Share No. 2.	5 annas only .. All other shares except that specified will be excluded from sale.	Sailaja Nath Rai Chaudhuri and others. A. P. Hemendra Nath Roy Chaudhury and another.	1,090 6 9	..	319 5 11½
4819	Ditto ..	3,508 8 11	Share No. 6	4 annas 4 gandas only. All other shares except that specified will be excluded from sale.	Protiva Sundari Debi	921 0 0	..	399 0 0
4993	Kharija taluk Ektarpur, pargana Sahauzial.	4,098 4 2	Share No. 0.	10 gandas 2 karas 2 crantis only. All other shares except that specified will be excluded from sale.	Umashashi Debi, mother and guardian of Ram Das Roy Chaudhuri.	136 9 9	..	52 3 5
4993	Ditto ..	4,098 4 2	Share No. 2.	8 annas only .. All other shares except that specified will be excluded from sale.	Joy Chandra Rai Chaudhuri, Sebait of Sree Sree Iswar Madan Gopal Jew Thakur.	2,049 2 1	..	782 6 9
4993	Ditto ..	4,098 4 2	Share No. 3.	1 anna 12 gandas .. All other shares except that specified will be excluded from sale.	Jogesh Chandra Banerji and others.	409 13 3	..	156 7 11
4993	Ditto ..	4,098 4 2	Share No. 4.	1 anna 12 gandas .. All other shares except hat specified will be excluded from sale.	Brindaban Ch. Roy Chaudhury.	409 13 3	..	156 8 3
5046	Kharija taluk Chakra Dihi, pargana Mahmudshahi.	655 10 10	Share No. 0.	13 annas 6 gandas 2 karas 2 crantis only. All other shares except that specified will be excluded from sale.	Sita Nath Majumdar. A. P. Abinash Ch. Nag.	546 6 4	..	190 1 1
5110	Kharija taluk Rampur Dihi, pargana Mulghar.	6,040 8 8	Share No. 1.	8 annas only .. All other shares except that specified will be excluded from sale.	Sibendra Nath Singha Roy.	3,020 4 4	..	882 7 11½
5417	Zamindari Dihi Ulashi, pargana Mulghar.	19,467 13 5	Do. ..	3 annas 15 gandas 1 cranti 16 tils only. All other shares except that specified will be excluded from sale.	Ashutosh Bhattacharji, executor to the Estate of Shibji and Narayanjee and others.	4,420 15 11	..	4,417 11 5
5417	Ditto ..	19,467 13 5	Share No. 2.	8 annas only .. All other shares except that specified will be excluded from sale.	Bhupendra Krishna Ghosh.	9,733 14 9	..	10,409 14 0
5417	Ditto ..	19,467 13 5	Share No. 5.	2 annas only .. All other shares except that specified will be excluded from sale.	Sarfaraj Ali Taraf-dar and others.	2,433 7 8	..	1,772 1 1
5448	Kharija taluk Dehi Rudrapur, pargana Mulghar.	5,233 10 8	Share No. 1.	8 annas only .. All other shares except that specified will be excluded from sale.	Sibendra Nath Singha Roy.	2,616 13 4	..	702 0 0

Jessore, the 15th February 1935.

S. CHATTERJEE, *for* Collector.

Notification A.

NOTICE is hereby given, under sections 6 and 13, Act XI of 1859, that the undermentioned estates and shares of estates in the district of Dacca, will be put up for sale at the office of the Collector of that district on the 26th March 1935, at 11 a.m., for arrears of revenue and other demands which by law are realizable as arrears of land revenue.

When in columns 5, 7 and 9 of the following statement it is stated that only a share is to be sold, it is to be understood that a separate account is kept for that share :—

Tauzi No.	Name of mahal and pargana.	Sadar jama of whole estate.	Whether the whole estate is to be sold.	If only a share is to be sold, specification of such share or shares.	Names of proprietors of property to be sold.	If only a share is to be sold, the sadar jama of such share.	If the whole estate is to be sold, the arrears due from it.	If only a share is to be sold, the arrears due from it.
1	2	3	4	5	6	7	8	9
		Rs. a. p.				Rs. a. p.	Rs. a. p.	Rs. a. p.
241	Zamindari Munshi Imamuddin Choudhury, pargana Rasulpur.	4,497 3 3	..	Residue share consisting of 16 annas share of Barisal land in Part I. 16 annas share of Faridpur and Tippera land in Part II. 16 annas share of Dacca land except 8 annas share of mauzas Mahakali and Nairpukur, etc., in Part III. 16 annas share of Mymensingh land in Part IV. All other shares than that specified above will be excluded from sale, viz., separate account Nos. 1 and 2 consisting of 8 annas share of mauzas Mahakali and Nairpukur, etc., in Part III.	Tamizannesa Khatun and others.	4,410 3 10	..	3,425 11 11
8433	Meyadi Mahal Gopechar, pargana Khizirpur.	1,116 0 0	Whole estate.	....	Lalit Mohan Ray ..	..	418 0 0	..
9069	Deara Mahal Char Kukurhati, pargana Khalilabad.	2,304 0 0	Do. ..	....	Bhubar Mohan Saha and others. Auction purchaser Babu Jogendra Kumar Mukherjee, Manager, Swarnamayee Debi Court of Ward's Estate.	..	201 12 6	..
9762	Meyadi Mahal Char Dilarpur, pargana Bardakhat.	5,335 0 0	Do. ..	....	Bipin Behari Saha Sardar and others. Auction purchaser Adinath Ghose	..	2,001 0 0	..
10408	Dayeni Mahal Char Kalim, pargana Shuduri.	1,339 6 7	..	Separate account No. 1 consisting of 8 annas share. All other shares than that specified above will be excluded from sale, viz., separate account No. 2 and residue share consisting of 8 annas share.	Satya Charan Dutta	669 11 4	..	140 8 0
10804	Deara Mahal Kunjanagar, pargana Bikrampur.	1,159 0 0	Whole estate.	....	Manmatha Nath Basak and others.	..	1,013 0 0	..
10886	Deara Mahal Somlbad, pargana Bardakhat.	964 0 0	Do. ..	....	Devendra Chandra Ray Choudhury and others. Auction purchaser Durgesh Chandra Bhattacharya.	..	682 0 0	..
11024	Deara Mahal Chandpur, pargana Bardakhat, Tappe Panchbhag.	1,076 0 0	Do. ..	....	Jogobandhu Ray and others.	..	1,276 0 0	..
11037	Taluk Char Bhodepur, pargana Makimpur.	1,205 0 0	Do. ..	....	Srinath Kar, and others. Acution purchaser Ramani Mohan Barari, B.A.	..	137 2 7	..
15642	Deara Mahal Char Saidpur, Tappe Ram Bhowal.	692 0 0	Do. ..	....	Md. Barkatulla and others. Auction purchaser Jolekha Khatun.	..	260 0 0	..
15727	Deara Mahal Char Chamardaha, pargana Jahangirnagar.	652 0 0	Do. ..	....	Girish Chandra Das, Receiver to the estate of Kripamayee Debi and others.	..	149 10 11	..
15793	Deara Mahal Ballarpur, pargana Sultan Pratap, Tappe Dhamrai.	710 0 0	Do.	....	Ditto ..	..	79 10 7	..

Tauzi No.	Name of mahal and pargana.	Sadar jama of the whole estate.	Whether the whole estate is to be sold	If only a share is to be sold, specification of such share or shares.	Names of proprietors of property to be sold.	If only a share is to be sold, the sadar jama of such share.	If the whole estate is to be sold, the arrears due from it.	If only a share is to be sold, the arrears due from it.
1	2	3	4	5	6	7	8	9
		Rs. a. p.				Rs. a. p.	Rs. a. p.	Rs. a. p.
15794	Deara Mahal Mushurikhola, pargana Jahangirnagar, Bartail.	556 0 0	Whole estate.	....	Amrita Lal Choudhury and others.	..	82 14 0	..
15842	Deara Estate Baherchar, pargana Nil.	587 0 0	Do. ..	....	Mahendra Nath Roy Choudhury and others. Auction purchaser Ramani Mohan Barari, R.A.	..	109 14 7	..
15862	Lakhi Kanta Deb Bhowmik Roy Choudhury, pargana Bardakhat.	858 14 0	Do. ..	....	Lakshi Kanta De Bhowmik Roy Choudhury and others.	..	214 10 0	..
16032	Moyadi Mahal Char Dilarpur Nasaraddi Sarkar, pargana Bardakhat.	2,723 0 0	Do. ..	....	Lalit Mohan Ray and another. Auction purchaser Lalit Mohan Ray.	..	2,042 0 0	..
16090	Deara Mahal Kismat Hargaz Birendra Nath Ray Choudhury, pargana Isakabad.	1,342 0 0	Do. ..	....	Birendra Nath Ray Choudhury.	..	693 9 9	..
16489	Surplus or excess land of Gopalpur, pargana Nasti.	2,610 0 0	..	Residue share consisting of 4 annas share. All other shares than that specified above will be excluded from sale, viz., separate account No. 1 consisting of 12 annas share only.	Brindarani Dasya and another.	652 8 0	..	89 8 0

The notice is issued in respect of instalments of revenue which were due on or before the 30th Agrahayan, 1341 B.S. of which the latest date of payment was the 12th January 1935.

J. R. BLAIR, Collector.

Dacca, the 19th February 1935.

Notification A.

NOTICE is hereby given, under sections 6 and 13 of Act XI of 1859, that the under-mentioned estate in the district of Mymensingh will be put up for sale at the office of the Collector of that district on the 26th March 1935, at 12 noon, for arrears of revenue, the instalments of which were due on or before the 30th Agrahayan, 1341 B. S., of which the latest date of payment was on 12th January 1935, and other public demands which by law are realisable as arrears of land revenue.

Tauzi No.	Name of mahal and pargana.	Sadar jama of whole estate.	Whether the whole estate is to be sold.	If only a share is to be sold, specification of such share or shares.	Names of proprietors of property to be sold.	If only a share is to be sold, the sadar jama of such share.	If the whole estate is to be sold, the arrears due from it.	If only a share is to be sold, the arrears due from it.
1	2	3	4	5	6	7	8	9
		Rs. a. p					Rs. a. p.	
5498	Char Nij Dhunail, pargana Atia.	1,393 0 0	Yes ..	....	Maulvi Md. Haidarali Khan Pani and others.	..	250 4 0	..

Mymensingh, the 20th February 1935.

[ILLEGIBLE], *for* Collector.

Notification A.

NOTICE is hereby given, under sections 6 and 13, Act XI of 1859, that the undermentioned estates and shares of estates in the district of Malda will be put up for sale at the office of the Collector of that district on the 26th March 1935, at 12 noon, for arrears of revenue and other demands which by law are realisable as arrears of land revenue.

When in columns 5, 7 and 9 of the following statement it is stated that only a share is to be sold, it is to be understood that a separate account is kept for that share :—

Tauzi No.	Name of mahal and pargana.	Sadar jama of whole estate.	Whether the whole estate is to be sold.	If only a share is to be sold, specification of such share or shares.	Names of proprietors of property to be sold.	If only a share is to be sold, the sadar jama of such share.	If the whole estate is to be sold, the arrears due from it.	If only a share is to be sold, the arrears due from it.
1	2	3	4	5	6	7	8	9
		Rs. a. p.				Rs. a. p.	Rs. a. p.	Rs. a. p.
3	Taraf Amrak, pargana Chandlal.	1,709 2 7	Whole	....	Brojendra Mohan Moitra and Gopikul Mohan Moitra.	..	665 5 10	..
13	Kismat pargana Bansolole Pattapur, pargana Do.	4,113 6 3	..	13-R. S. 15 as. 10 g. share.	Ditto ..	2,261 8 6	..	770 13 5
38	Kismat 4 annas, toke Bhadoir, motaloke Chandpur and others, pargana Rajnagar.	1,101 14 0	..	38-R. S. 8 annas share.	Murali Lal Choudhury.	550 15 0	..	142 7 0
84	Taraf Hossainpur, pargana Kotowali.	2,614 12 0	Whole	....	Gossain Rudrananda Giri.	..	861 0 0	..
89	Kismat pargana Habelitara, pargana Habelitara.	984 5 0	Do.	....	Mohant Bhagaban Das, sebait on behalf of Sree Sree Iswar Raghunath Das Thakur.	..	227 0 0	..
118	Taraf Jadunagar Nimgachhi, pargana Bhatia Gopalpur	1,653 14 9	..	118-1. 16 annas share of Jadabnagar and 3 other mauzas.	Md. Ichha Sha and others.	862 15 0	..	22 8 0
125	Kismat pargana Kashimnagar, pargana Kashimnagar.	1,036 8 0	..	125-R. S. 9 as. 3 g. 2 k. 2 kr. share of the whole estate.	Purna Chandra Mallik and others.	593 6 0	..	6 14 0
140	Taraf Khanl Alampur, pargana Bhatia Gopalpur.	11,069 2 2	Whole	146-R. S. 8 annas share.	Kumar Krishna Ghosh.	5,534 9 1	..	799 4 5
146	Ditto ..	11,069 2 2	Do.	146-1. 8 annas share	Tarangini Dasi, guardian on behalf of minors Niroj Krishna Ghose and others.	5,534 9 1	..	799 4 5
163	Toke Bhaktipur, motaloke mauza Madhalpur, pargana Rukunpur.	1,188 14 0	..	163-1. 8 annas share of the whole estate.	Prafulla Kumar Banerjee.	594 7 0	..	200 8 0
205	Taraf Raghunathpur and others, pargana Bhatia Gopalpur.	4,405 10 4	..	205-7. 16 annas share of mauza Yadgarpur and 15 other mauzas.	Sripatibhuson Das and others.	2,120 5 0	..	395 1 0
205	Ditto ..	4,405 10 4	..	205-13. 6 annas share of mauzas Raghunathpur and others.	Dinabandhu Singh Jha and others.	857 0 0	..	81 3 0
221	Taraf Sadipur, pargana Kotwoali.	693 3 0	Whole	....	Gossain Rudrananda Giri.	..	200 0 0	..
233	Taraf Tikoil and others, pargana Chandlal.	1,841 13 0	..	233-1. 16 annas share of mauzas Abhayanandapur, Gopalchandi, Gossainpur, Raitan *alias* Bulbul, Bil Alal, Bil Dighi, Bil Barda, Baidyapur, Bhojo *alias* Bhojan, Mirzapur and Harinathpur; 8 annas share of mauzas Gokulpur and Sarjana; 4 annas share of mauza Maruat and 7 as. 6 g. 2 k. 2 kr. share of mauzas Parila and Salalpur.	Radharaman Chowdhury.	844 3 0	..	280 12 0
554	4th Toke, 4 annas of mauza Subail, motaloke lat Chandpur, pargana Rajnagar.	1,101 14 0	..	554-R. S. 14 as. 6 g. 2 k. 2 kr. share of the whole estate.	Bibi Fatema Khatun Chowdhurani, wife of Wahed Baksh Chowdhury and others.	987 2 0	..	340 2 0
581	Kashimpur, pargana Kashimpur.	2,311 15 0	..	581-7. 5 as. 12¼ g. share of Indrasail and 27 other mauzas.	Mirza Abul Hossain Beg.	599 2 0	..	194 0 0
597	Taraf Raghabbati, pargana Islampur.	6,152 7 0	..	597-R. S. 8 annas share of mauzas Airmari and others; and 16 annas share of mauzas Gota and others.	Kali Charan Singh	3,482 3 0	..	317 8 0

(1) In cases in which shares of estates are advertised, only those shares as mentioned above will be put to sale and all other shares will be excluded.

(2) This notification is issued in respect of instalments of revenue which were due on or before 30th Agrahayan, 1341 B.S., of which the latest date of payment was 12th January 1935.

G. B. GHOSHAL, *for* Collector.

Malda, the 19th February 1935.

Notification A.

NOTICE is hereby given, under sections 6 and 13, Act XI of 1859, that the undermentioned estates and shares of estates in the district of Howrah will be put up for sale at the office of the Collector of that district on 26th March 1935, at 12 noon, for arrears of revenue and other demands which by law are realisable as arrears of land revenue.

When in columns 5, 7 and 9 of the following statement it is stated that only a share is to be sold, it is to be understood that a separate account is kept for that share :—

Tauzi No.	Name of mahal and pargana.	Sadar jama of whole estate.	Whether the whole estate is to be sold.	If only a share is to be sold, specification of such share or shares.	Names of proprietors of property to be sold.	If only a share is to be sold, the sadar jama of such share.	If the whole estate is to be sold, the arrears due from it.	If only a share is to be sold, the arrears due from it.
1	2	3	4	5	6	7	8	9
		Rs. a. p.				Rs. a. p.		Rs. a. p.
1/9	Basantapur, pargana Bhursit.	11,065 7 0	..	1a. 16gds.* ..	Manohar Lal Seal	1,244 14 4	..	465 3 11
4/Rs.	Mandalghat, pargana Mandalghat.	2,23,106 11 6	..	12 gandas* ..	Raja Janaki Nath Ray Bahadur and others.	8,420 4 3	..	2,147 5 0
4/7	Ditto ..	2,23,106 11 6	..	2as. 11gds. 3kg. 4tils.	Manohar Lal Seal	35,674 10 3	..	17,104 10 3
4/8	Ditto ..	2,23,106 11 6	..	12 gds. 3 c. 16 tils*	Sm. Nikunja Monjuri Dasai.	8,929 9 6	..	4,122 2 7
4/12	Ditto ..	2,23,106 11 6	..	10 gandas* ..	Sailajanath Ray Choudhury and others.	6,972 13 2	..	19,754 12 0
4/13	Ditto ..	2,23,106 11 6	..	10 gandas* ..	Shamananda Banerjee, manager of the estate of Jotindra Nath Ray Choudhury, and others.	6,072 13 2	..	9,385 8 10
4/15	Ditto ..	2,23,106 11 6	..	1a. 10gds. 2c. 3kg. 10½ tils.*	Panchanan Mallick	21,405 7 9	..	5,980 9 4
4/17	Ditto ..	2,23,106 11 6	..	1a. 10gds. 2c. 3kg. 10½tils.	Giri Mohan Mallick	21,405 7 8	..	7,060 9 2
4/18	Ditto ..	2,23,106 11 6	..	1a. 10gds. 2c. 3kg. 10½ tils.*	Gour Mohan Mallick.	21,405 7 9	..	6,452 4 9

*All other shares will be excluded from the sale.

This estate is being advertised for sale for instalments of revenue which was due on or before the 30th Agrahyan, 1341 B.S., and arrears of previous kists, of which the latest date of payment was 12th January 1935.

Howrah, the 22nd February 1935. B. K. GHOSH, *for* Collector.

Notification A.

NOTICE is hereby given, under section 6, Act XI of 1859, read with Act VII (B.C.) of 1865, that the undermentioneld noabad taluks within the Raozan khas mahal in the district of Chittagong will be put up for sale in the office of the Collector of that district on the 27th March 1935, at 12 noon, for arrears of rent and cess and other demands which by law are realisable as arrears of rent and cess :—

Tauzi No.	Name of mahal and pargana.	Sadar jama of whole estate.	Whether the whole estate is to be sold.	If only a share is to be sold, specification of such share or shares.	Names of proprietors of property to be sold.	If only a share is to be sold, the sadar jama of such share.	If the whole estate is to be sold, the arrears due from it.	If only a share is to be sold, the arrears due from it.
1	2	3	4	5	6	7	8	9
		Rs. a. p.					Rs. a. p.	
24560	Taluk Ranu Debya, mauza Madhya Kanchannagar, thana Fatikchari.	721 0 0 14 14 3	Whole	....	Abdul Khaleque Meah, Saleh Ahammad Meah, sons of Munshi Emdat Ali Chowdhury, of Kapasgola, Chittagong.	..	317 7 6 3 11 6	..
24578	Taluk Ranu Debya, mauza Dakhin Kanchannagar, thana Fatikchari.	1,253 0 0 177 8 0	Do. ..	....	Abdul Sobahan, son of Ali Mea Chowdhury, Aminar Rahaman, son of Thanda Mea Chowdhury, and others, of Dakhin Kanchannagar, police-station Fatikchari.	..	348 15 0 88 12 0	..
31192	Taluk Kosalya, mauza Ghatcheck, police-station Rangunia.	907 0 0 162 6 6	Do. ..	....	Nagendra Kumar, son of Mrityunjay Chowdhuri, of Madarsha, police-station Hathazari.	..	646 9 0 142 1 9	..
31899	Taluk Kaluda Barua, mauza Debipur Kadamtali, police-station Rangunia.	650 4 0 47 6 3	Do. ..	....	Kishori Mohan, son of Pitambar Mahajan, of Binajuri, police-station Raozan.	..	63 8 0 11 13 6	..

These noabad taluks are being advertised for sale for instalments of rents and cesses which were due on or before the 30th November 1934, of which the latest date of payment was 12th January 1935.

Chittagong, the 21st February 1935. K. G. MURSHED, Addl. Collector.

Notification A.

NOTICE is hereby given, under section 6, Act XI of 1859, read with Act VII of 1868, that the undermentioned noabad taluks and izaras within the Sadar khas mahal in the district of Chittagong will be put up for sale at the office of the Collector of that district on the 26th March 1935, at 12 noon, for arrears of rents and cesses and other demands which by law are realisable as arrears of rent :—

Number of taluks.	Name of taluks with its situation.	Name of talukdars.	Sadar Jama.		Arrears.		
			Rent.	Cess.	Rent.	Cess.	Total.
1	2	3	4	5	6	7	8
			Rs. a. p.	Rs. a. p.	Rs. a. p.	Rs. a. p.	Rs. a. p.
20134	Taluk Ahamad Ali, mauza Bakalia, thana Panchalaish.	Bhupendra Krishna Ghose, son of Trailakya Nath Ghose, of 46, Pathuriaghata, Calcutta, at present Chandanpura, and others.	2,962 0 0	257 7 3	2,261 3 0	196 13 6	2,458 0 6
35034	Taluk Gagan Chandra Aich, mauza Patenga, thana Double Mooring.	Nilkamal, son of Broja Mohan Dey, of Nij.	680 4 0	56 11 0	510 0 0	39 2 3	549 2 3
22843	Taluk Aminulla and others, mauza Bagachatar, thana Sitakunda.	Mahammad Nural Afsar, son of Ali Ahamad Chowdhuri, Abida Khatoon, wife of Abdul Hai Chowdhuri, of Magadia, thana Mirswari, and others.	501 4 0	58 9 9	179 6 0	14 10 6	194 0 6
23028	Taluk Fatema Khatoon, mauza Wahedpur, thana Mirswari.	Sayed Mahammed Tabatabai, son of Sayed Mahammed Bakar, of Bongalbazar, and others.	1,044 4 0	104 0 3	261 0 0	26 0 0	287 0 0
23863	Taluk Aminullah and others, mauza Joypur Purbba Joar, thana Mirswari.	Bidhu Bhusan Rai Chowdhuri, son of Rai Golak Chandra Chowdhuri Bahadur, Nani Bala Rai Chowdhuri, wife of Dakhina Ranjan Rai Chowdhuri, of Dhum, thana Mirswari, and others.	731 0 0	99 8 9	685 4 2	87 0 9	772 4 11
23864	Ditto	Ditto ..	1,228 12 0	148 15 0	1,228 13 0	138 7 3	1,367 4 3
23878	Taluk Karalikhan, mauza Jujkhola, thana Fatikchari.	Abdul Matalep, Aminar Rahaman, Keramat Ali, sons of Jinnat Ali Chowdhuri, of Silania, and others.	3,760 0 0	635 6 6	2,986 13 0	499 2 6	3,485 15 6
23879	Taluk Shek Abdulla Khan, mauza Datmara, thana Fatikchari.	Ajijakhatoon Chowdhurani, wife of Badarazzaman Chowdhuri, of Nij.	1,510 4 0	208 5 9	842 12 0	110 13 0	953 9 0
23944	Taluk Mahesh Chandra, mauza Idilpur, thana Fatikchari.	Kiran Chandra, son of Jagat Chandra Guha, of Mirjapur, thana Hathazari.	537 12 0	58 10 9	432 2 0	44 8 3	476 10 3
23934	Taluk Kaptan Teksera, mauza Chandpur, thana Fatikchari.	Manindra Nath Biswas, son of Sarat Chandra Biswas, of Sarwatali, police-station Boalkhali.	1,064 8 0	114 0 0	678 4 0	69 12 0	748 0 9

These noabad taluks and izaras are being advertised for sale for instalments of rents and cesses due on or before the 30th November 1934, of which the latest date of payment was 12th January 1935.

K. G. MURSHED, Addl. Collector.

Chittagong, the 21st February 1935.

Notification A.

NOTICE is hereby given, under sections 6 and 13, Act XI of 1859, that the undermentioned estates and shares of estates in the district of Khulna, will be put up to sale at the office of the Collector of that district on the 26th March 1935, at 12 noon, for arrears of revenue and other demands which by law are realizable as arrears of land revenue.

When in columns 5, 7 and 9 of the following statement it is stated that only a share is to be sold, it is to be understood that a separate account is kept for that share :—

Tauzi No.	Name of mahal and pargana.	Annual land revenue of whole estate.	Whether the whole estate is to be sold.	If only a share is to be sold, specification of such share or shares.	Names of proprietors of property to be sold.	If only a share is to be sold, the sadar jama of such share.	If the whole estate is to be sold, the arrears due from it.	If only a share is to be sold, the arrears due from it.
1	2	3	4	5	6	7	8	9
		Rs. a. p.				Rs. a. p.	Rs. a. p.	Rs. a. p.
170	Rajendra Mohon, pargana Selimabad.	..	No ..	1 anna 3 gandas 1 kara share. Separate account No. 7.	Rajendra Mohon Roy Choudhury and others.	420 0 10	..	147 0 11
				1 anna share. Separate account No. 8.	Ditto ..	361 5 4	..	126 8 8
				All other shares besides that specified will be excluded from the sale.		781 6 2		273 9 7
967	Sreemanta, pargana Hogla.	..	No ..	5 annas 1 ganda 1 kara and 1 kranti share. Separate account No. 2.	Sreemanta Chatterjee	2,950 11 9	..	379 9 6
				All other shares besides that specified will be excluded from the sale.				
1068	Dwijendra, pargana Buran.	947 3 1	Whole	....	Mr. K. C. Mukherjee, Official Receiver, High Court.	..	287 12 10	..
1327	Murari Mohon, pargana Talakhajra.	861 1 10	Do. ..	....	Tarak Nath Mullick and others.	..	230 0 0	..

N.B.—The above estate and shares of estates are being advertised for sale for instalments of revenue which were due on or before the 30th Agrahayan, 1341 B.S., the latest date of payment of which was the 12th January 1935.

S. BHATTACHARJI, *for* Collector.

Khulna, the 23rd February 1935.

Notification A.

NOTICE is hereby given, under sections 6 and 13, Act XI of 1859, that the undermentioned estates and shares of estates in the district of Burdwan will be put up for sale at the office of the Collector of that district on the 25th March 1935, at 12 noon, for arrears of revenue and other demands which by law are realizable as arrears of land revenue.

When in columns 5, 7 and 9 of the following statement it is stated that only a share is to be sold, it is to be understood that a separate account is kept for that share :—

Tauzi No.	Name of mahal and pargana.	Sadar jama of whole estate.	Whether the whole estate is to be sold.	If only a share is to be sold, specification of such share or shares.	Names of proprietors of property to be sold.	If only a share is to be sold, the sadar jama of such share.	If the whole estate is to be sold, the arrears due from it.	If only a share is to be sold, the arrears due from it.
1	2	3	4	5	6	7	8	9
		Rs. a. p.				Rs. a. p.	Rs. a. p.	Rs. a. p.
23	Paligram, pargana Ajmatshahi.	2,676 8 9	Whole estate is to be sold.	....	Manadamayi Dasi, guardian of minors Sadananda Ray and others.	..	993 1 1	..
101	Chandpur, pargana Amirabad.	1,740 8 3	Do. ..	....	Sajani Mohan Mullick and others.	.	447 15 11 Police Revenue— 6 12 9	..
19	Gidhagram, pargana Arsha.	7,808 12 9	..	S. A. No. 12—1 a. 6 g. 2 k. 2 cr. All other shares than that specified will be excluded from the sale.	Sidheswar Banerjee and others.	609 3 0	..	228 12 3
20	Bistoopur, pargana Bagha.	62,970 14 6	..	S. A. No. 5— 13 g. 2 k. 2 cr. All other shares than that specified will be excluded from the sale.	Dina Nath Tewari and others as sebait of Sridhar Lal Jiu Thakur.	2,694 1 0	..	1,322 0 0 September 1934— 323 0 0 January 1935— 999 0 0
								1,322 0 0
21	Mahata, pargana Bagha.	11,672 3 6	..	S. A. No. 2—1 a. 5 g. 3 k. 2 cr. 1½ dt. All other shares than that specified will be excluded from the sale.	Satindra Nath Panja and others.	947 11 9	..	118 0 6
93	Karni, pargana Benodenagar.	1,399 7 6	Whole estate is to be sold.	...	Khitish Chandra Banerjee and others.	..	571 10 2 September 1934— 25 8 1 January 1935— 546 2 1	..
							571 10 2	
24	Kashinathpur, pargana Dhenya.	3,192 15 0	..	Residuary—14 annas. All other shares than that specified will be excluded from the sale.	Panchu Gopal Mukherjee and others.	2,793 13 0	..	648 11 11
64	Jageswardihi, pargana Dhenya.	3,953 6 0	Whole estate is to be sold.	....	Bibhuti Bhusan Pal Choudhury and others.	..	1,474 9 0	..
62	Palsona, pargana Dhenya.	7,400 11 11	..	Residuary—8 as. 6 g. 2 cr. ½ dt.	Ganga Gobinda Chandra and others.	3,843 5 11	..	1,467 2 . Police Revenue— 18 6 0 September 1934— 360 7 3 January 1935— 1,106 10 9
								1,467 2 0
				S. A. No. 5—1 a. 5 g. 2½ dt. All other shares than that specified will be excluded from the sale.	Dhanapati Chandra	579 12 9	..	72 2 4
5171	Haldi, etc., pargana Burdwan.	1,559 1 6	Whole estate is to be sold.	. .	Panchu Gopal Mukherjee and others.	..	355 6 6	..
5174	Salkuni, pargana Burdwan.	1,689 0 0	..	Residuary—8 annas share. All other shares than that specified will be excluded from the sale.	Manadamayi Dasi, guardian of minors Sadananda Ray and others.	841 1 0	..	311 12 9
5248	Deypara, pargana Burdwan.	787 7 0	Whole estate is to be sold.	....	Panchu Gopal Mukherjee and others.	..	94 8 10	..
5261	Ditto ..	786 1 0	Do. ..	....	Ditto ..	..	93 14 8	..
27	Sahapur, pargana Jahangirabad.	8,506 3 0	Do. ..	....	Hari Das Saha and others.	..	3,550 3 11 September 1934— 283 11 7 January 1935— 3,166 8 4	..
							3,550 3 11	

Tauzi No.	Name of mahal and pargana.	Sadar jama of whole estate.	Whether the whole estate is to be sold.	If only a share is to be sold, specification of such share or shares.	Names of proprietors of property to be sold.	If only a share is to be sold, the sadar jama of such share.	If the whole estate is to be sold, the arrears due from it.	If only a share is to be sold, the arrears due from it.
1	2	3	4	5	6	7	8	9
		Rs. a. p.				Rs. a. p.	Rs. a. p.	Rs. a. p.
2	Kantalgachi, pargana Chutipur.	1,579 13 4	..	S. A. No. 4—5 as. 15 g. 6806 2 k. 2 cr. 2 ——— dt. 9479 All other shares than that specified will be excluded from the sale.	Sayed Mazhuran Moti Choudhury and others.	571 7 0	..	206 1 3
114	Dehura, pargana Chutipur.	990 6 5	Whole estate is to be sold.	....	Durgesnandini Debi as sebait of Ram Sita, Sridhar Jain and Shib Thakur.	..	375 0 1	..
135	Gouripur, pargana Chutipur.	1,219 5 9	..	Residuary—7as. 7g. 1 k. 2 55629 ——— dt. 234117 All other shares than that specified will be excluded from the sale.	Balai Chand Chcudhury and others.	561 5 9	..	1 4 0
65	Majida, pargana Patuli.	9,381 6 9	..	S. A. No. 6—1 a. 15 g. 2 k. 2 dt.	Amiya Prosad Mullick and others.	1,044 6 6	..	389 13 6
				S. A. No. 7—1 a. 15 g. 2 k. 2 dt.	Panchu Gopal Chakravarty.	1,044 10 2	..	389 14 10
			—	S. A. No. 8—2 as. 13 g. 1 k. 1 cr. All other shares than that specified will be excluded from the sale.	Ram Ranjan Mullick and others.	1,566 10 1	..	1,580 2 10 June 1933— 13 8 9 September 1933— 237 7 5 January 1934— 584 12 4 March 1934— 539 15 8 June 1934— 204 6 8 1,580 2 10
74	Patuli, pargana Patuli.	2,796 9 0	..	S. A. No. 3—5 as. 12g. All other shares than that specified will be excluded from the sale.	Gour Bhusan Chatterjee.	1,007 11 0	..	379 10 11
104	Surdanga, pargana Mamdanipur.	1,374 8 10	Whole estate is to be sold.	....	Sachhidananda Basu and others.	..	559 0 0	..
107	Islampur, pargana Mamdanipur.	3,957 12 9	..	S. A. No. 4—3 as. 3 g. 2 k. 1 cr. 3 dt. All other shares than that specified will be excluded from the sale.	Ashutosh Chandra Mitra.	786 8 0	..	301 13 5
174	Goara, pargana Mamdanipur.	694 5 0	Whole estate is to be sold.	....	Monindra Nath Bhattacharjee.	..	201 5 0	..
170	Santoshpur, pargana Rajpur.	638 6 6	Do. ..	....	Sankar Kinker Hazra and others.	..	160 3 3	..
160	Bengachia, pargana Satsaika.	641 15 5	..	Residuary—14 annas. All other shares than that specified will be excluded from the sale.	Tara Das Muhuri ..	561 11 5	..	190 1 5
5297	Rautgram, pargana Satsaika.	2,121 15 8	Whole estate is to be sold.	....	Matwali Fatema Khatun.	..	710 0 0	..
5298	Gopalpur, pargana Satsaika.	677 9 7	Do. ..	....	Rajendra Ch. Mitra, sebait of Durgamata Thakurani.	..	218 9 9	..
5170	Dankadanga, pargana Sahabad.	6,421 15 3	..	S. A. No. 1—2 as. 13 g. 1 k. 1 cr.	Indumati Debi, guardian of minor Baidya Nath Ray.	1,070 5 4	..	399 4 4
				S. A. No. 2—2 as. 13 g. 1 k. 1 cr. All other shares than that specified will be excluded from the sale.	Mrinamayi Debi ..	1,070 5 4	..	242 1 8
82	Kalikapur, pargana Sergor.	522 12 4	Whole estate is to be sold.	....	Dharani Dhar Barman.	..	167 13 10	..

The notice is issued in respect of instalments of revenue which were due on or before the 30th Agrahayan, 1341 B.S., of which the latest date of payment was 12th January 1935 except in respect of tauzi Nos. 20(5), 93, 62R and 27 for which the latest date of payments were 28th September 1934 and 12th January 1935 and tauzi No. 65(6) for which the latest date of payments were 28th June 1933, 5th October 1933, 12th January 1934, 28th March 1934 and 28th June 1934.

Burdwan, the 22nd February 1935.

[ILLEGIBLE], *for* Collector.

Notification A.

NOTICE is hereby given, under sections 6 and 13, Act XI of 1859, that the undermentioned estates and shares of estates in the district of Murshidabad will be put up to sale at the office of the Collector of that district on the 25th March 1935, at 12 noon, for arrears of revenue and other demands which by law are realisable as land revenue.

When in columns 5, 7 and 9 of the following statement it is stated that only a share is to be sold, it is to be understood that a separate account is keep for that share :—

Tauzi No.	Name of mahal and pargana.	Sadar jama of whole estate.	Whether the whole estate is to be sold.	If only a share is to be sold, specification of such share or shares.	Names of proprietors of property to be sold.	If only a share is to be sold, the sadar jama of such share.	If the whole estate is to be sold, the arrears due from it.	If only a share is to be sold, the arrears due from it.
1	2	3	4	5	6	7	8	9
		Rs. a. p.				Rs. a. p.	Rs. a. p.	Rs. a. p.
5	Dihi Kutabpur, pargana Sherpur.	..	No ..	Residuary share 1 a. 7 g. 1 c. 2 kg. 6 til 2 c. of dt. 2 kr. of dt.	Syed Abdul Ohid .	610 12 2 Police— 4 14 5	..	282 0 0 Police— 1 2 6
				S. A. No. 3 share 1 a. 4 g. 3c. 1 kg. 2½ tils.	Syed Abu Asgar ..	555 11 10 Police— 4 3 11	..	255 3 11 Police— 0 5 1
				S. A. No. 4 share 1 a. 4 g. 3 c. 1 kg. 2½ tils.	Ditto ..	555 11 10 Police— 4 3 11	.	254 15 0 Police— 0 12 3
				S. A. No. 12 share 1 a. 18 g. 3 c. 3 kg. 6 tils 2 c. of til 2 kr. of til. All other shares besides that specified will be excluded from the sale.	Syed Md. Abdul Hafiz	872 5 3 Police— 6 10 9	..	397 9 4 Police— 1 11 0
9	Kashipur, pargana Kashipur.	..	No ..	S. A. No. 3 share 3 as. 4 g. 3 c. 2 kg. 4 til.	Rudra Nath Roy Choudhury.	1,637 4 0	..	485 3 0
				S. A. No. 5 share 1a 18 g. 3kg. 15 tils.	Sourindra Krishna Singha and others sebaits of Sri Sri Iswar Durga Debi Thakurani.	964 0 0	..	283 15 0
				S. A. No. 6 share 1 a 11 g. 3 kg. 6 tils.	Jogemaya Debi and another.	787 6 6	..	231 13 3
				S. A. No. 8 share 1 a. 3 c. 18 tils.	Harimoti Choudhurany as mother and guardian of Phani Bhusan Rai Chaudhury, minor.	524 15 0	..	154 9 6
				S. A. No. 11 share 3 as. 2 c. 2 kg. All other shares besides that specified will be excluded from the sale.	Gosta Behary Mondal certified guardian of Rash Behary Mondal.	1,520 6 0	..	154 6 5
12	Kutabpur, pargana Kutabpur.	2,301 1 1	Whole	..	Maulvi Golam Gous and others.	..	549 7 11	..
13	Kulberia, pargana Kulberia.	..	No	Residuary share 8 annas	Nani Gopal Chakravarty as sebait of Gopal Deb Thakur.	1,865 14 7	..	498 2 2
				S. A. No. 1 share 8 annas. All other shares besides that specified will be excluded from the sale.	Khagendra Narayan Bandopadhya Choudhury and others.	1,865 14 7	..	498 2 2
21	Ditto ..	..	No ..	S. A. No. 12 share 7 as. 4 g. 1 c. 1 kr. 3 kg 1 dt. 10½ tils 1½ job. All other shares besides that specified will be excluded from the sale.	Tarakinkar Chandra	534 7 4	..	133 1 3
25	Korjara, pargana Beharole.	..	No ..	Residuary share 12 annas. All other shares besides that specified will be excluded from the sale.	Sudhindra Mohan Bagchi and others.	890 14 3	..	161 4 0
39	Jhikarhati, pargana Sahazadpur.	1,142 9 0	Whole ..	..	Shib Kumar Das, Receiver to the estate of insolvent Sudhir Krishna Bandopadhya, sebait of Sri Sri Radha Kanta Jew Thakur.	..	401 0 0	..
49	Kumari Kasimpur, pargana Khargram.	523 5 2	Do. ..	..	Bijay Gobinda Dubey	..	135 15 0	..
55	Kismut pargana Khargram, pargana Khargram.	..	No ..	S. A. No. 18 share 3 as. 12 g. 1 c. 1 kg. 8 tils. 2 c. of til 1 kg. of til. 15 til of til. All other shares besides that specified will be excluded from the sale.	Mohadeb Roy Choudhury.	535 15 4	..	219 10 7

Tauz No.	Name of mahal and pargana.	Sadar jama of whole estate.	Whether the whole estate is to be sold.	If only a share is to be sold, specification of such share or shares.	Names of proprietors of property to be sold.	If only a share is to be sold, the sadar jama of such share.	If the whole estate is to be sold, the arrears due from it.	If only a share is to be sold, the arrears due from it.
1	2	3	4	5	6	7	8	9
		Rs. a. p.				Rs. a. p.	Rs. a. p.	Rs. a. p.
56	Kismut pargana Khargram, pargana Khargram.	..	No ..	Residuary share 2as. 2g. 1c. 2kg. 1kr. 4 til of dt. 3 kg of til of dt. 1 kr. of til of dt. 7 til of til of dt. 1 kg. 7 til 1c. 3kg. 6 til of a til of dt. All other shares besides that specified will be excluded from the sale.	Fullara Charan Banerjee and others.	572 14 7	..	231 2 5
63	Kharija taluk Kismat Khalilpur, pargana Islampur.	506 10 8	Whole	....	Shubhasini Gupta and others, sebait of Lakshmi Janardon Thakur and other Thakurs.	..	286 12 6	..
65	Kismat Khagjana Taraf Kumirdaha, pargana Samaskhali.	..	No ..	Residuary share 10as. 13g. 1c. 1kr. All other shares besides that specified will be excluded from the sale.	Bhupendra Lal Choudhury and others.	802 2 7	..	176 14 7
70	Dihi Gankar, pargana Gankar	..	No ..	Residuary share 3as. 16g. 1c. 1kr.	Krishna Chandra Baral and others, sebaits of Sri Sri Iswar Brindaban Behari Deb Thakur.	3,484 2 9 Police— 63 1 10	..	1,630 9 11 Police— 15 12 5
				S. A. No. 1 share 3as. 16g. 2kr. 2dt.	Gobinda Das Nath, sebait of Sri Sri Iswar Brindaban Behari Deb Thakur.	3,482 15 0 Police— 63 0 2	..	1,651 7 11 Police— 15 12 1
				S. A. No. 2 share 3as. 16g. 2kr. 2dt.	Shyamcharan Nath, sebait of Sri Sri Iswar Brindaban Behari Deb Thakur.	3,482 15 0 Police— 63 0 3	..	1,651 7 10 Police— 15 12 0
				S. A. No. 3 share 3as. 16g. 2kr. 2dt.	Radha Ballav Nath, sebait of Sri Sri Iswar Brindaban Behari Deb Thakur.	3,482 15 0 Police— 63 0 2	..	1,651 7 10 Police— 15 12 1
				S. A. No. 4 share, 15 gandas. All other shares besides that specified will be excluded from the sale.	Sarojini Bala Dasi as mother and guardian of Sailendra Kumar Baral and others, minors, sebaits of Sri Sri Iswar Brindaban Behari Deb Thakur.	685 3 8 Police— 12 6 5	..	340 0 0 Police— 3 1 8
71	Dihi Gangedda, pargana Gankar.	..	No ..	S. A. No. 1 share 11as. 7g. 3c. 2kr. 2½dt. All other shares besides that specified will be excluded from the sale.	Krishna Gobinda Bhoumik as common manager to the estate of Probodh Chandra Sarkar, sebait of Sri Sri Iswar Brindaban Behari Deb Thakur, and others.	1,948 4 0 Police— 35 3 0	.	872 9 9 Police— 9 3 0
83	Kismat mauza Gurulia, pargana Mohalandi.	..	No ..	Residuary share 10as. 19g. 1dt. All other shares besides that specified will be excluded from the sale.	Lalit Mohan Mitra and others.	1,056 11 5	..	67 15 9
97	Dihi Churigram, pargana Serpur.	..	No ..	Residuary share 8 annas. All other shares besides that specified will be excluded from the sale.	Niranjan Gupta, common manager to the estate of Bhupendra Kumar and Biswanath Sarkar.	880 14 10	..	409 0 5
101	Kismat Pargana Chunakhali, pargana Chunakhali.	..	No ..	S. A. No. 1 share, 9 annas.	Shubhadra Bai Choudhurani, sebait of Sri Sri Iswar Raghunath Deb Thakur.	857 7 4	..	241 15 5
112	Kismat Mauza Chandipur, pargana Kashipur.	662 9 7	Whole	....	Izak Mirza and another.	..	130 0 0	..
113	Mauza Chamunda, pargana Muraripur.	756 5 8	Do. ..	....	Lalit Mohan Singh and others.	..	378 10 8	..
165	Taraf Tella Noapara, pargana Gankar.	2,659 2 11	Do. ..	....	Ditto ..	..	1,292 12 10	..
167	Dayanagor Kismat, pargana Danyanagor.	..	No ..	Residuary share 12 annas. All other shares besides that specified will be excluded from the sale.	Choudhury Muhammad Abdul Azim Abu Ahamad *alias* Abal Muktar and and others.	7,193 1 6	..	3,116 0 1
200	Nawda Belun, pargana Dhawa.	..	No	Residuary share 10 as. 13 g. 1 c. 1 kr. All other shares besides that specified will be excluded from the sale.	Sudhindra Nath Mukherjee and others.	1,179 10 5	..	320 0 0

Tauzi No.	Name of mahal and pargana.	Sadar jama of whole estate.	Whether the whole estate is to be sold.	If only a share is to be sold, specification of such share or shares.	Names of proprietors of property to be sold.	If only a share is to be sold, the sadar jama of such share.	If the whole estate is to be sold, the arrears due from it.	If only a share is to be sold, the arrears due from it.
1	2	3	4	5	6	7	8	9
		Rs. a. p.				Rs. a. p.	Rs. a. p.	Rs. a. p.
221	Huda Patkabari, pargana Patkabari	.	No	Residuary share 4 as. 13 g. 1 c. 1 kr.	Syed Taki Ali Mirza *alias* Syed Rais Mirza.	3,308 9 3 Police— 54 5 10	..	1,489 4 8 Police— 13 0 6
				S. A. No. 1 share 2 annas.	Syed Kaikaus Mirza *alias* Chunni Shaheb.	1,417 15 9 Police— 23 4 9	..	638 3 9 Police— 5 13 1
				S. A. No. 3 share 1 a. 17 g. 2 c.	Syed Fateh Ali Mirza *alias* Bugga Shaheb.	1,329 5 9 Police— 21 13 6	..	598 6 1 Police— 5 7 5
				S. A. No. 4 share 1 a. 17 g. 2 c. All other shares besides that specified will be excluded from the sale.	Syed Nunha Mirza *alias* Nunha Shaheb.	1,329 5 9 Police— 21 13 6	..	598 6 1 Police— 5 7 5
254	Fatesing Kismat Pargana, pargana Fatesing.	..	No	S. A. No. 1 share 3 as. 4 g. All other shares besides that specified will be excluded from the sale.	Dwijendra Narayan Roy.	9,269 2 8	..	3,810 12 10
262	Huda Baranagar, pargana Muraripur.	4,062 13 1 Police— 72 2 4	Whole	....	Purna Chandra Chatterjee and another.	..	1,720 8 3 Police— 6 6 6	..
264	Dihi Bara Simulia, pargana Gankar.	3,575 6 3 Police— 64 11 4	Do.	....	Amulya Ratan Chandra.	.	709 11 9 Police— 8 0 11	..
279	Kismut mauza Basudebkhali, pargana Mohalandi.	..	No	S. A. No. 1 share 3 as. 5 g. 2 c. 6½ til. All other shares besides that specified will be excluded from the sale.	Khagendra Behari Datta and others.	547 11 0	..	237 8 9
297	Birbhadrapur *alias* Birchandrapur, pargana Kastagarh.	695 13 4	Whole	....	Prasanna Kumar Banerjee and others.	..	43 6 6	.
323	Taraf Bagha Mitrapur, pargana Nowanagar.	663 9 6	Do.	....	Nitai Charan Biswas as sebait of Sri Sri Iswar Shib Thakur.	..	308 4 3	..
324	Taraf Bir Thamba, pargana Sahajadpur.	711 13 2	Do.	....	Nalinakshya Roy and others.	.	298 11 6	..
327	Kismut Baintali, pargana Baintali.	2,561 1 1	Do.	....	Kali Charan Singha and others.	..	1,126 6 5	..
328	Kismut Pargana Baintali, pargana Baintali.	2,316 8 9	Do.	....	Ditto ..	..	670 1 8	..
332	Huda Bhawanipur, pargana Akbarshahi.	..	No	Residuary share 6 as. 8 g. All other shares besides that specified will be excluded from the sale.	Aditya Prosad Bagchi and others.	1,085 11 0	..	359 3 9
339	Dihi Moregram, pargana Sahabazpur.	4,824 14 9	Whole	.. .	Lala Kameswar Nath and another.	..	701 14 7	..
341	Dih Mastafapur, pargana Serpur.	..	No	S. A. No. 7 share 2 as. 8 g. 3 c. All other shares besides that specified will be excluded from the sale.	Madan Mohan Tribedi and others.	1,055 8 11	..	495 7 11
342	Dihi Monaikandra, pargana Serpur.	..	No ..	Residuary share 2 as. 13 g. 1 c. 1 kr.	Nabendu Narayan Roy Choudhury as sebait of Sri Sri Iswar Mohamaya Raj Rajeswari Thakurani.	575 7 0 Police— 4 6 5	..	271 0 4 Police— 1 1 4
				S. A. No. 2 share 5 as 6 g. 2 c. 2 kr.	Bishnupada Misra and another.	1,150 14 0 Police— 8 12 11	..	542 0 9 Police— 2 3 2
				S. A. No. 3 share 5 as. 6 g. 2 c. 2 kr.	Manajendra Narayan Roy Choudhury and others, sebaits of Sri Sri Iswar Mohamaya Raj Rajeswari Thakurani.	1,150 14 0 Police— 8 12 11	..	542 0 9 Police— 2 3 2
				S. A. No. 4 share 2 as. 13 g. 1 c. 1 kr. All other shares besides that specified will be excluded from the sale.	Satyendra Narayan Roy Choudhury as sebait of Sri Sri Iswar Mohamaya Raj Rajeswari Thakurani.	575 6 11 Police— 4 6 5	..	271 0 3 Police— 0 0 1

Tauzi No.	Name of mahal and pargana.	Sadar jama of whole estate.	Whether the whole estate is to be sold.	If only a share is to be sold, specification of such share or shares.	Names of proprietors of property to be sold.	If only a share is to be sold, the sadar jama of such share.	If the whole estate is to be sold, the arrears due from it.	If only a share is to be sold, the arrears due from it.
1	2	3	4	5	6	7	8	9
		Rs. a. p.				Rs. a. p.	Rs. a. p.	Rs. a. p.
345	Mohanpur Pargana, pargana Mohanpur.	4,390 11 0	Whole	....	Bhola Nath Bhattacharjee as Receiver to the estate of Nirode Mohan Ghose Moulik and others, sebait of Sri Sri Iswar Radha Gobinda Deb Thakur.	..	1,182 14 11	..
346	Mohalandi Kismut Pargana, pargana Mahalandi.	..	No ..	S. A. No. 1 share 4 annas. All other shares besides that specified will be excluded from the sale.	Khagendra Behari Datta and others.	612 14 3	..	234 1 8
353	Ditto ..	..	No ..	Residuary share 6 annas. All other shares besides that specified will be excluded from the sale.	Khondkar Moulvi Mohammad Abu Ahasan and others.	629 5 9	..	229 1 8
364	Mouza Kismut Masumabad, pargana Masumabad.	1,236 1 1	Whole	....	Nitya Kali Dasya ..	..	511 8 0	..
369	Muhammadpur Jamserpur, pargana Dashazari.	752 4 10	Do. ..	....	Lalit Mohan Singha and others.	..	116 7 3	..
386	Taraf Matiapara, pargana Beharole.	..	No ..	S. A. No. 1 share 11 a. 10 g. All other shares besides that specified will be excluded from the sale.	Priya Nath Gangopadhya.	994 4 7	..	399 7 0
387	Mohadebnagar Taraf, pargana Rajshahi.	..	No ..	S. A. 3 share 4 as. 12 g. 2 c. All other shares besides that specified will be excluded from the sale.	Umapada Singha and others.	539 9 9	..	120 13 9
397	Rasulpur Kismut, pargana Serpur.	..	No ..	S. A. No. 2 share 5 as. 5 g.	Khondkar, Mohamad Abu Ahasan and others	825 10 6	..	326 12 9
				S. A. No. 3 share 3 as. 15 g. All other shares besides that specified will be excluded from the sale.	Khondkar Fazla Kader Abu Jamil as motowalli and Secretary to the Bijgram Hosainabad French High School Committee and others.	589 12 1	..	215 11 11
436	Kismat Pargana Shajahanpur, pargana Shajahanpur.	..	No ..	Residuary share 9 as. 12 g. All other shares besides that specified will be excluded from the sale.	Anila Bala Debi and another.	2,089 15 10	..	671 11 4
456	Samsabad Kismat Mouza, pargana Behorole.	..	No ..	S. A. No. 2 share 5 as. 5 g.	Khondakar Maulvi Mohamad Abu Ahasan and others.	2,029 2 2	..	759 13 9
				S. A. No. 3 share 3 as. 15 g.	Bibi Ummat Jakia and others.	1,449 6 1	..	566 1 1
				S. A. No. 5 share 1 a. 11 g. 2 c. 2 kr. All other shares besides that specified will be excluded from the sale.	Bibi Hafijatonnesa and another.	611 15 5	..	196 9 7
486	Dihi Hilora, pargana Sultanuzian	..	No ..	S. A. No. 1 share 8 annas. All other shares besides that specified will be excluded from the sale.	Mohini Mohan Sarkar, sebait of Sri Sri Iswar Giridhari Deb Thakur and other Thakurs.	2,434 14 1	..	577 4 10
487	Hariharpara Taraf Kismat, pargana Nosaikka Fatepur.	..	No ..	S. A. No. 25 share 2 as. 1 kr. 1 dwip 2 5/12dt. All other shares besides that specified will be excluded from the sale.	Saroj Nath Roy Choudhury.	580 4 11	..	271 15 3
495	Mouza Harispur, pargana Kulberia.	520 0 0	Whole	....	Nirode Mohan Ghosh Moulik and others, sebaits of Sri Sri Joy Shib Durga.	..	130 11 9	..
499	Taraf Hilora, pargana Sultanuzian.	1,759 6 0	Do.	....	Radha Ballav Sarma Mohanta as sebait of Sri Sri Iswar Shyam Sundar Deb Thakur and others	..	383 6 11	..

Tauzi No.	Name of mahal and pargana.	Sadar jama of whole estate.	Whether the whole estate is to be sold.	If only a share is to be sold, specification of such share or shares.	Names of proprietors of property to be sold.	If only a share is to be sold, the sadar jama of such share.	If the whole estate is to be sold, the arrears due from it.	If only a share is to be sold, the arrears due from it.
1	2	3	4	5	6	7	8	9
		Rs. a. p.				Rs. a. p.	Rs. a. p.	Rs. a. p.
508	Dihi Atal, pargana Sherpur.	..	No	Residuary share 8 annas.	Nilabja Prova Debi as grandmother and guardian and Kiron Bala Singha as mother and guardian of Amrita Gopal Singha and another, minors.	1,726 5 0 Police— 13 3 4	..	613 1 1 Police— 3 4 10
				S. A. No. 4 share 3 as. 6 g. 2 c. 2 kr. All other shares besides that specified will be excluded from the sale.	Sourendra Krishna Singh and others, sebaits of Sri Sri Durga Debi Thakurani.	719 4 9 Police— 5 8 1	..	338 12 5 Police— 1 5 11
516	Taraf Munia Dihi, pargana Fatesing.	..	No ..	Residuary share 8 annas.	Krishna Sunalini Dasi, mother and guardian of Subodh Krishna Moulik and others, minors.	3,229 1 1	..	1,282 2 2
				S. A. No. 1 share 8 annas. All other shares besides that specified will be excluded from the sale.	Saroje Krishna Ghose Moulik.	3,229 1 ½	..	1,199 15 11½
537	Kismat Pargana Akbarshahi, pargana Akbarshahi.	..	No ..	S. A. No. 5 share 3 annas.	Prokash Chandra Choudhury.	605 11 5	..	245 12 9
597	Nialishpara, pargana Mazafarpur.	1,151 8 0	Whole	....	Suresh Chandra Sen and another.	..	364 11 0	..
2745	Taraf Sundalpur, pargana Asadnagar.	528 11 6	Do. ..	....	Sishir Kumar Banerjee	..	132 0 0	..
2779	Taraf Kanaipara, pargana Asadnagar.	1,185 13 1	Do. ..	....	Dharani Kumar Ghose and another.	..	298 0 0	..
2786	Rambhadrapur Taraf, pargana Asadnagar.	1,028 2 7	Do. ..	....	Syed Sadek Reza	..	230 15 10	..
2797	Hay Charkapara Kismat, pargana Sultanuzian.	734 7 0	Do. ..	....	Maharaj Kumar Sashi Kanta Acharja.	..	360 0 0	..
3010	Bharwa, pargana Kutabpur.	..	No ..	Residuary share 13 as. 4 g. All other shares besides that specified will be excluded from the sale.	Lalit Mohan Mustafi and others.	578 2 7	..	168 0 0
598 Part II.	Char Mohula, pargana Chunakhali.	1,346 0 0	Whole	....	Mohini Mohan Chattopadhya and others.	..	337 0 0	..
2758 Part II.	Char Mirzapur, pargana Plasey.	3,720 0 0	Do.	....	Priya Nath Ganguli	..	930 0 0	..

This notice is issued in respect of instalments of revenue which were due on or before the 30th Agrahayan, 1341 B. S., of which the latest date of payment was 12th January, 1935 A. D.

Murshidabad, the 23rd February 1935.

A. HOSSAIN, *for* Collector.

NOTICE is hereby given under sections 5, 6 and 11, Act VII of 1868, and section 6, Act XI of 1859, that the undermentioned tenures in the district of Darjeeling, will be put up for sale at the office of the Subdivisional Officer, Siliguri, on the 25th March 1935, at Siliguri at 11 a.m. for arrears of revenue and other demands which by law are realisable as arrears of land revenue :—

Tauzi No.	Name of mahal and pargana.	Sadar jama of whole tenure.	Whether the whole tenure is to be sold.	Names of proprietors of property to be sold.	If the whole tenure is to be sold the arrears due from it.
1	2	3	4	5	6
		Rs. a. p.			Rs. a. p.
91	Terai khas mahal, pargana Hatighisa, Sukharu jote No. 139.	508 0 0	Whole ..	Mohan Lal Agarwala ..	702 0 0
91	Terai khas mahal, pargana, Patharghatta, Dhansara, jote No. 575.	638 0 0	Do. ..	Chumani Bewa and others ..	90 1 0

These tenures are being advertised for sale for instalments of revenue which were due on the 31st October 1934, of which the latest date of payment was on the 12th January 1935.

D. N. SEN,

Deputy Collector, Siliguri [vested with the powers of a Collector under Act XI of 1859 and Act VII (B.C.) of 1868.]

Siliguri, the 19th February 1935.

Proclamation of Sale.

[See Rule 29.]

NOTICE is hereby given that, under rule 28 in Schedule II to the Bengal Public Demands Recovery Act, 1913, an order has been passed by me for the sale of the property mentioned in the annexed schedule, in satisfaction of the claim of the certificate-holder under the certificate mentioned below amounting, with costs and interest up to date of sale, to the sum of Rs. 132-11-8—

Certificate No. 14M. of 1933-34, under which State Secretary is the certificate-holder and Sudhirendra Kumar Sannyal and another are the certificate-debtors.

The sale will be by public auction, and the property will be put up for sale in the lots specified in the schedule. The sale will be of the property of the certificate-debtors abovenamed as mentioned in the schedule below.

In the absence of any order of postponement, the sale will be held by the undersigned at 12 o'clock on the 18th March 1935 at the Malda Certificate Court. In the event, however, of the debt above specified, and of the costs of the sale, being tendered or paid before the knocking down of any lot, the sale will be stopped.

At the sale the public generally are invited to bid, either personally or by duly authorised agent. The following are the further conditions of sale :—

1. The particulars specified in the schedule below have been stated to the best of the information of the Certificate Officer ; but the Certificate Officer will not be answerable for any error, misstatement or omission in this proclamation.
2. The amount by which the biddings are to be increased shall be determined by the officer conducting the sale. In the event of any dispute arising as to the amount bid, or as to the bidder, the lot shall at once be again put up to auction.
3. The highest bidder shall be declared to be the purchaser of any lot, provided always that he is legally qualified to bid, and provided that it shall be in the discretion of the officer holding the sale to decline acceptance of the highest bid when the price offered appears so clearly inadequate as to make it advisable to do so.
4. For reasons recorded, it shall be in the discretion of the officer conducting the sale to adjourn it, subject always to the provisions of rule 32 in Schedule II to the Bengal Public Demands Recovery Act, 1913.
5. In the case of movable property, the price of each lot shall be paid at the time of sale or as soon after as the officer holding the sale directs, and in default of payment the property shall forthwith be again put up and re-sold.
6. In the case of immovable property, the persons declared to be the purchaser shall pay immediately after such declaration a deposit of 25 per cent. on the amount of his purchase-money to the officer conducting the sale, and in default of such deposit the property shall forthwith be put up again and re-sold.
7. The full amount of the purchase-money shall be paid by the purchaser before the office of the Certificate Officer closes on the fifteenth day after the sale of the property, exclusive of such day, or if the fifteenth day be a Sunday or other holiday, then on the first office day after the fifteenth day.
8. In default of payment of the balance of the pruchase-money within the period allowed the property shall be re-sold after the issue of a fresh notification of sale. The deposit, after defraying the expenses of the sale, may, if the Certificate Officer thinks fit, be forfeited to the Government, and the defaulting purchaser shall forfeit all claims to the property or to any part of the sum for which it may be subsequently sold.

Given under my hand and seal, this 5th day of February 1935.

[ILLEGIBLE], Certificate Officer, Malda.

Schedule of Property.

Number of lot.	Description of property to be sold, with the name of each owner where there are more certificate-debtors than one.	The revenue assessed upon the estate or part of the estate if the property to be sold is an interest in an estate or a part of an estate paying revenue to the Government.	Claims (if any) which have been put forward to the property, and any other known particulars bearing on its nature and value.
1	2	3	4
1	16 annas share of tauzi No. 268 borne on the Revenue Roll of the Murshidabad Collectorate. Total area of the estate 1,308·08 acres.	Rs. 705-4 ..	Nil

NOTICE FOR SALE.

In the Court of the Sub-Judge, Rangpur.

MORTGAGE EXECUTION CASE No. 242 OF 1934.

Rangpur Loan Office, Ltd., decree-holder,

vs.

Jatindra Mohan Roy Chowdhury and another, judgment-debtors.

THE public are hereby given notice that the undermentioned property of the judgment-debtors will be sold by public auction by the Nazir of the Court of the District Judge, Rangpur, in the sale room of the said Court at 12 noon on the 5th March 1935 under orders of the Court—

Decree-holder's dues—Rs. 41,961-2-6p.

Schedule.

Eight annas share of the right, title and interest of the judgment-debtor No. 1 in the zemindary estate comprising taluk Naokari Chandanpat, Kismat Bivar and taluk Sundarahabi within police-station Kaliganj, pargana Tepa, bearing tauzi No. 140 of the Rangpur Collectorate in which the judgment-debtor No. 1's name is registered to the extent of 2 annas 8 pies share only for which he, by amicable arrangement, pays land revenue of Rs. 563-3-2½ gds., but which is liable to pay revenue to the extent of Rs. 3,857-2-6p.

Estimated value as fixed by Court—Rs. 28,800.

[ILLEGIBLE], *for* Sub-Judge.

Rangpur, the 5th February 1935.

(433—1)

SALE NOTICE.

In the Court of the Addl. Sub-Judge of Nadia.

M. EX. CASE No. 3 OF 1935.

Guru Dashi Dashi, decree-holder,

vs.

Laxinarayan Ganguli and 14 others of Hijuli, police-station Ranaghat, judgment-debtors.

First date of sale—8th March 1935, at 12 noon.

Schedule of property to be sold.

THE entire sixteen annas proprietary interest of tauzi No. 110 of the Nadia Collectorate consisting of mauzas Chapra, Daula, Magurkhali, Dhantala, Debipur, Purba-Sambhupur and Harachandrapur under police-station and subdivision Ranaghat in the pargana Mamjoani, bearing an annual revenue of Rs. 1,311-6-5 gandas payable to the Collector of Nadia will be sold by the Nazir, District Judge's Court, Nadia. The property is in khas collection of the judgment-debtors and the value of the sixteen annas proprietary interest, as given in the sale proclamation, is Rs. 5,000 only.

[ILLEGIBLE], Addl. Sub-Judge.

Nadia, the 16th February 1935. (553—1)

SALE NOTICE.

In the Court of the Addl. Sub-Judge of Nadia.

M. EX. CASE No. 2 OF 1935.

Indubala Dashi, wife of Dr. Hari Charan Ghose, of Ranaghat, decree-holder,

vs.

Laxinarayan Ganguli and 14 others of Hijuli, police-station Ranaghat, judgment-debtors.

First date of sale—8th March 1935, at 12 noon.

Schedule of property to be sold.

THE entire sixteen annas proprietary interest of tauzi No. 110 of the Nadia Collectorate consisting of mauzas Chapra, Daula, Magurkhali, Dhantala, Debipur, Purba-Sambhupur and Harachandrapur under police-station and subdivision Ranaghat in the pargana Mamjoani, bearing an annual revenue of Rs. 1,311-6-5 gandas, payable to the Collector of Nadia will be sold by the Nazir, District Judge's Court, Nadia. The property is in the khas collection of the judgment-debtors and the value of the sixteen annas proprietary interest, as given in the sale proclamation, is Rs. 5,000 only.

[ILLEGIBLE,] Addl. Sub-Judge.

Nadia, the 16th February 1935. (554—1)

In the High Court of Judicature at Fort William in Bengal in Insolvency.

NOTICE is hereby given that dividends as noted below have been declared and they are payable from this office on proved and admitted claims—

No. 216 of 1931.

Estate—Albert Charles Awdry.
First dividend at 25 per cent.

No. 216 of 1924.

Estate—Haji Karim Habib Dorojiwalla.
Final dividend at 4-8 per cent.

No. 131 of 1932.

Estate—Upendra Nath Sen.
First dividend at 17 per cent.

No. 158 of 1926.

Estate—John Hamilton Gordon.
First dividend at 15 per cent.

No. 138 of 1931.

Estate—John Sydney Wall.
First dividend at 60 per cent.

G. M. FALKNER, Official Assignee.

Calcutta, the 21st February 1935. (575—1)

In the High Court of Judicature at Fort William in Bengal, in Insolvency.

NOTICE OF ADJUDICATION ORDER.

No. 14 of 1935.

Re Henry D. Chawdhury, residing at No. 33, Amherst Street, in the town of Calcutta, and employed as a clerk by the British India Steam Navigation Co., Ltd., at No. 16, Strand Road, Calcutta, *ex parte* the debtor in person.

ON the 14th day of February 1935 an order was made by the High Court of Judicature at Fort William in Bengal in its insolvency jurisdiction adjudging the abovenamed as an insolvent.

Note.—All debts due to the estate should be paid to me.

Dated this 18th day of February 1935.

G. M. FALKNER, Official Assignee.

In the High Court of Judicature at Fort William in Bengal, in Insolvency.

NOTICE OF ADJUDICATION ORDER.

No. 15 of 1935.

Re Eric Zorab, residing at No. 6, Middle Road, Hastings, in the town of Calcutta, and lately employed as an assistant at Juggernath Ghat godown of Messrs. Rivers Steam Navigation Co., Ltd., of No 2, Fairlie Place, Calcutta, and at present of no occupation, *ex parte* the debtor in person.

ON the 14th day of February 1935 an order was made by the High Court of Judicature at Fort William in Bengal in its insolvency jurisdiction adjudging the abovenamed as an insolvent.

Note.—All debts due to the estate should be paid to me.

Dated this 18th day of February 1935.

G. M. FALKNER, Official Assignee.

In the High Court of Judicature at Fort William in Bengal, in Insolvency.

NOTICE OF ADJUDICATION ORDER.

No. 17 of 1935.

Re Edred William Peters, residing at No. 19, Bow Street, in the town of Calcutta, employed as a Proof Reader in the Private Secretary's Press, Government of Bengal, at No. 2, Larkin Lane, in Calcutta aforesaid, *ex parte* the debtor in person.

ON the 16th day of February 1935 an order was made by the High Court of Judicature at Fort William in Bengal in its insolvency jurisdiction adjudging the abovenamed as an insolvent.

Note.—All debts due to the estate should be paid to me.

Dated this 20th day of February 1935.

G. M. FALKNER, Official Assignee.

In the 1st Court of Sub-Judge of Bakarganj.

T. EX. CASE No. 193 OF 1934.

Sachindra Nath Mukherjee, Receiver, Bhukailash, debutter estate, plaintiff, decree-holder,

versus

Hem Kanta Sen Raichoudhury and others, judgment-debtors.

THE following properties of the judgment-debtors will be sold in auction sale in the sale room of this Court on the 13th day of March 1935, at 12 o'clock in the forenoon, for recovery of Rs. 38,288-12 only :—

Property.

Within district Bakarganj, subdivision Perojpur, police-station Mathbaria and pargana Bajrogomedpur Lapta abad chak Jnanpara, there is a taluk No. 4900 acquired by auction sale and purchase Khewat No. 1 of which 19 gandas 1 kara 1 kranti 10 til is owned by Upendra Nath Sen ; 19 gandas1 kara 1 kranti 10 til by Narendra Nath Sen and 1 anna 18 gandas 3 karas by Babu Hem Kanta Sen, in all 3 annas 17½ gandas ; the annual revenue of the entire Khewat is Rs. 10,568 ; the proportionate revenue of the shares advertised for sale is Rs. 2,559-7 only.

S. C. BOSE, Sub-Judge.

Barisal, the 15th February 1935. (519—1)

In the Court of the Fourth Officer, Deoghar, Santhal Parganas.

RENT SUIT No. 1081 OF 1934.

To Satis Chandra Chatterji.

WHEREAS the Receiver, Rohini Estate, has instituted a rent suit against you for your holding in mauza Basnadih, taluq Rohini, amounting to Rs. 78-5-6 and costs Rs. 13-11-3, you are hereby directed to appear before this Court personally or through an authorised agent to answer the claim or the case will be decided *ex parte* on 15th March 1935.

S. N. HUSSAIN, Sub-Deputy Collector.

Deoghar, the 14th February 1935. (532—2)

In the Court of the Fourth Officer, Deoghar, Santhal Parganas.

RENT SUIT No. 1062 OF 1934.

To Babu Madhu Sudan Banerjee.

WHEREAS the Receiver, Rohini Estate, has instituted a rent suit against you for your holding in mauza Barmashia, taluq Rohini, amounting to Rs. 23-3-3 and Rs. 9-9-3 as costs, you are hereby directed to appear before this Court personally or through an authorised agent on 14th March 1935 to answer the claim or the case will be decided *ex parte*.

S. N. HUSSAIN, Sub-Deputy Collector.

Deoghar, the 14th February 1935. (533—2)

In the Court of the Fourth Officer, Deoghar, Santhal Parganas.

RENT SUIT No. 1082 OF 1934.

To Khitish Chandra Banerjee.

WHEREAS the Receiver, Rohini Estate, has instituted a rent suit against you for your holding in mauza Baghmara, taluq Rohini, amounting to Rs. 78-5-6 and costs Rs. 13-11-3, you are hereby directed to appear before this Court personally or through an authorised agent to answer the claim or the case will be decided *ex parte* on 15th March 1935.

S. N. HUSSAIN,Sub-Deputy Collector.

Deoghar, the 14th February 1935. (534—2)

In the Court of the Fourth Officer, Deoghar, Santhal Parganas.

RENT SUIT No. 1075 OF 1934.

To Lala Gurvanaditya Mehera.

WHEREAS the Receiver, Rohini Estate, has instituted a rent suit against you for your holding in mauza Toradia, Bompas town, taluq Rohini, amounting to Rs. 74-7-3 and costs Rs. 13-5-3, you are hereby directed to appear before this Court personally or through an authorised agent to answer the claim or the case will be decided *ex parte* on 14th March 1935.

S. N. HUSSAIN, Sub-Deputy Collector.

Deoghar, the 14th February 1935. (535—2)

In the Court of the Fourth Officer, Deoghar, Santhal Parganas.

RENT SUIT No. 1031 OF 1934.

To Lalit Mohan Kar.

WHEREAS the Receiver, Rohini Estate, has instituted a rent suit against you for your holding in mauza Shamganj, Carstairs town, taluq Rohini, amounting to Rs. 7-8-0 and Rs. 8-7-3 as costs, you are hereby directed to appear before this Court personally or through an authorised agent on 14th March 1935 to answer the claim or the case will be decided *ex parte*.

S. N. HUSSAIN, Sub-Deputy Collector.

Deoghar, the 14th February 1935. (536—2)

In the Court of the Fourth Officer, Deoghar, Santhal Parganas.

RENT SUIT No. 1083 OF 1934.

To Jyotish Chandra Rai.

WHEREAS the Receiver, Rohini Estate, has instituted a rent suit against you for your holding in mauza Baghmara, taluq Rohini, amounting to Rs. 78-5-6 and Rs. 13-11-3 as costs, you are hereby directed to appear before this Court personally or through an authorised agent on 12th March 1935 to answer the claim or the case will be decided *ex parte*.

S. N. HUSSAIN, Sub-Deputy Collector.

Deoghar, the 14th February 1935. (537—2)

NOTICE OF APPLICATION OF DISCHARGE TO CREDITORS.

Section 41(*1*) of the Provincial Insolvency Act.

In the Court of the Sub-Judge at Asansol.

INSOLVENCY CASE No. 42 OF 1933.

Insolvent Tunda Driver.

TAKE notice that the abovenamed insolvent has applied for his discharge and that the Court has fixed the 15th March 1935 for the hearing of the said application.

K. BANERJEE, Sub-Judge.

Asansol, the 17th December 1934. (62—1)

NOTICE TO CREDITORS OF APPLICATION FOR DISCHARGE.

In the Court of the Sub-Judge at Asansol.

INSOLVENCY CASE No. 51 OF 1933.

Madanlal Brahman and others, insolvents.

TAKE notice that the abovenamed insolvents have applied for their discharge, and that the Court has fixed the 8th March 1935 for hearing of the said application.

K. BANERJI, Sub-Judge.

Asansol, the 16th February 1935. (529—1)

In the Court of the Sub-Judge at Asansol.

Section 19(2) of the Provincial Insolvency Act.

INSOLVENCY CASE No. 54 OF 1934.

NOTICE is hereby given to his creditors that the insolvency petition filed by G. A. Daring, Guard, E. I. Railway, has been admitted, and the 1st March 1935 has been fixed for hearing thereof.

K. BANERJI, Sub-Judge.

Asansol, the 15th February 1935. (530—1)

In the Court of the District Judge of Bakarganj.

INSOLVENCY CASE No. 20 OF 1934.

NOTICE is hereby given that one Kunja Behari Pal and four others of Maharajganj, police-station Jhalakati, district Bakarganj, have applied before this Court for an order of adjudication against their debtors (1) Rash Mohan Kunda, son of late Govinda Chandra Kunda, (2) Nanda Lal Kunda, son of late Mohanbashi Kunda, (3) Prem Benode Kunda, (4) Shyam Benode Kunda, (5) Rai Benode Kunda and (6) Chitta Benode Kunda, sons of late Lalit Mohan Kunda, of Hashara, police-station Sreenagar, district Dacca, at present residing at Galachipa, police-station Galachipa, district Bakarganj, and that the 2nd March 1935 has been fixed for hearing of the case in this Court.

W. McC. SHARPE, District Judge.

Barisal, the 12th February 1935. (475—1)

In the Court of the District Judge of Bogra.

INSOLVENCY CASE No. 1 OF 1935.

WHEREAS Kajem Uddin Sirker, son of late Nayeb Ulla Pramanik, of Chapra, police-station Dhunot, district Bogra, has applied to this Court by a petition, dated the 25th January 1935, to be declared insolvent, this is to give notice to all his creditors that the Court has fixed 2nd March 1935 for hearing of the aforesaid petition and for examination of the debtor.

S. C. MUKHERJI, *ex-officio* Registrar.

Bogra, the 13th February 1935. (459—1)

In the Court of the District Judge at Bogra.

INSOLVENCY CASE No. 2 OF 1934.

NOTICE is hereby given that the debtor Aswini Kumar Shaha, son of late Durga Charan Shaha, of Hili, police-station Panchbibi, district Bogra, was adjudged an insolvent on 17th December 1934 by an order of this Court and he was directed to apply for his discharge within six months.

S. C. MUKHERJI, *Ex-officio* Registrar.

Bogra, the 16th February 1935. (555—1)

In the Court of the District Judge of Burdwan.

INSOLVENCY CASE No. 2 OF 1935.

NOTICE is hereby given to the creditors that the insolvency petition filed by the debtor Mangilal Totela, son of late Ganga Prosad Totela, of Chandarul, district Jodhpur, at present residing at Uchitpur, police-station Raina, district Burdwan, has been admitted and that 6th day of March 1935 has been fixed for hearing of the application.

G. G. HOOPER, District Judge.

Burdwan, the 19th February 1935. (559—1)

ORDER ANNULLING ADJUDICATION.

Section 43 of the Provincial Insolvency Act, V of 1920.

In the Court of the District Judge at Chittagong.

INSOLVENCY APPLICATION No. 22 OF 1933.

(1) Abdul Aziz Mhd. Ibrahim Toongekar, Abdul Hamid Mhd. Ibrahim Toogekar, of Uran, district Koleba, in the presidency of Bombay, carrying on business under the name and style of Mhd. Ibrah'm and Mhd. Jafar and Company, at present Strand Road, Chittagong, creditors, applicants.

ON the insolvent's not filing the petition for discharge, it is ordered that the order of adjudication, dated 21st November 1933, against Nabin Chandra Mohajan, son of late Dharmadas Mohajan, of Jujkhola, police-station Fatickcherry, Chittagong, debtor, be and the same is hereby annulled.

Dated this 22nd day of May 1934.

E. S. SIMPSON, District Judge.

(328—1)

NOTICE TO CREDITORS OF APPLICATION FOR DISCHARGE.

Section 41(1) of the Provincial Insolvency Act, V of 1920.

In the Court of the District Judge at Dacca.

INSOLVENCY CASE No. 30 OF 1933.

Anirudhya Nandi, son of late Janaki Nath Nandi, residing at 8-9, Sankhari Bazar, police-station Kotwali, district Dacca, insolvent.

TAKE notice that the abovenamed insolvent has applied at the Court for his discharge, and that the Court has fixed the 7th day of March 1935 at 10 o'clock for hearing the application.

Dated this 13th day of February 1935.

E. B. H. BAKER, District Judge.

(525—1)

In the 3rd Court of the Sub-Judge, Dacca.

INSOLVENCY CASE Nos. 96 AND 97 OF 1934.

Sukai Kaibarta Das and Kunja Mohan Kaibarta Das, sons of late Gagan Kaibarta Das, of Kandail, police-station Narshingdi, district Dacca, petitioners.

NOTICE is hereby given to all that abovenamed petitioners have filed petitions for insolvency in this Court on 12th November 1934, and the date of hearing has been fixed on 2nd March 1935 for examination of the petitioners.

R. C. SEN, Sub-Judge.

Dacca, the 12th February 1935. (480—1)

In the 3rd Court of the Sub-Judge, Dacca.

INSOLVENCY CASE No. 100 OF 1933.

Kunja Behari Bose, son of late Girish Chandra Bose, of Khorda Mohespur, police-station Daulatpur, district Dacca, petitioner.

NOTICE is hereby given to all that the abovenamed petitioner has been adjudged an insolvent on 7th June 1934, and the date for hearing his final discharge has been fixed on 2nd March 1935.

R. C. SEN, Sub-Judge.

Dacca, the 12th February 1935. (482—1)

In the 3rd Court of the Sub-Judge, Dacca.

INSOLVENCY CASE No. 13 OF 1935.

Durga Prasanna Chanda of Khidirpara, police-station Louhajang, district Dacca, creditor, petitioner,

versus

Firm Nasiram, Brindaban and Ram Chandra Banik at Haldia Bazar, police-station Louhajang, district Dacca, debtor, opposite party.

NOTICE is hereby given to all that the abovenamed creditor, petitioner, has filed a petition for adjudging the debtor, opposite party, an insolvent in this Court on 25th January 1935, and the date of hearing has been fixed on 9th March 1935 for examination of the petitioner.

R. C. SEN, Sub-Judge.

Dacca, the 12th February 1935. (483—1)

In the Court of the District Judge of Dinajpur.

INSOLVENCY CASE No. 4 OF 1935.

Manindra Nath Ray, Phanindra Nath Ray, Nani Gopal Ray, Haripada Ray and Rabindra Nath Ray, petitioners.

MANINDRA NATH RAY, Phanindra Nath Ray, Nani Gopal Ray, Haripada Ray and Rabindra Nath Ray, sons of late Jadu Nath Ray, of Balurghat, Dinajpur, have applied to this Court to be adjudged insolvents. The Court has fixed the 6th of March 1935 for hearing the application at Dinajpur.

S. S. R. HATTIANGADI, District Judge.

Dinajpur, the 2nd February 1935. (411—1)

In the Court of the District Judge of Faridpur.

INSOLVENCY CASE No. 192 OF 1934.

Sheik Jonabali, son of late Samiraddi Hadgi, of Dakshin Gangadhardi, police-station Bhanga, district Faridpur, debtor, petitioner.

NOTICE is hereby given that the abovenamed debtor-petitioner has applied to this Court for being adjudged insolvent and the 2nd March 1935 has been fixed for the hearing of the application.

K. B. ROY, Addl. District Judge-in-charge.

Faridpur, the 5th February 1935. (410—1)

In the Court of the District Judge of Faridpur.

INSOLVENCY CASE No. 182 OF 1934.

Matilal Saha, son of late Mahim Chandra Saha, of Harina, called Dheukhali, police-station Sadarpur, district Faridpur, debtor, petitioner.

NOTICE is hereby given that the abovenamed petitioner has applied to this Court for being adjudged insolvent and the 5th March next has been fixed for the hearing of the application.

K. B. ROY, District Judge.

Faridpur, the 21st February 1935. (579—1)

In the Court of the District Judge of Hooghly.

INSOLVENCY PETITION No. 24 OF 1934.

NOTICE is hereby given that Hiralal Das, son of late Pitambar Das, of Jaynagore, thana Tarakeswar, district Hooghly, was on the 13th November 1934 adjudged an insolvent. The 1st April 1935 has been fixed for framing a schedule and creditors are required to prove their claims on that day.

S. SEN, District Judge.

Chinsura, the 2nd January 1935. (186—1)

In the Court of the District Judge of Hooghly.

INSOLVENCY PETITION No. 26 OF 1934.

NOTICE is hereby given that Madhu Sudan Das, son of Hira Lal Das, of Jaynagore, thana Tarakeswar, district Hooghly, was on the 13th November 1934 adjudged an insolvent. The 1st April 1935 has been fixed for framing a schedule and creditors are required to prove their claims on that day.

S. SEN, District Judge.

Chinsura, the 2nd January 1935. (189—1)

In the Court of the District Judge of Hooghly.

INSOLVENCY PETITION No. 14 OF 1934.

NOTICE is hereby given that Panchanan Ghosh, son of late Madhab Chandra Ghosh, of Rameswarbati, thana Dhaniakhali, district Hooghly, was on the 12th December 1934 adjudged an insolvent. The 1st April 1935 has been fixed for framing a schedule and creditors are required to prove their claims on that day.

S. SEN, District Judge.

Chinsura, the 11th January 1935. (191—1)

In the Court of the District Judge of Hooghly.

INSOLVENCY PETITION No. 14 OF 1933.

NOTICE is hereby given that Maulvi Mahammad Jiyaul Hack, son of late Golam Kader, of Udna, thana Khanakul, district Hooghly, was on the 1st February 1934 adjudged an insolvent. The 6th March 1935 has been fixed for framing a schedule and creditors are required to prove their claims on that day.

S. SEN, District Judge.

Chinsura, the 15th January 1935. (313—1)

In the Court of the District Judge of Hooghly.

NOTICE is hereby given, under clause (*2*) of section 12 of the Provincial Insolvency Act, V of 1920, to his creditors that the insolvency petition of Upendra Nath Dutt, son of late Dinanath Dutt, of Haripal, thana Haripal, district Hooghly, has been admitted by this Court as No. 7 of 1935 and that the 4th March 1935 has been fixed for the hearing thereof.

T. BANERJI, *for* District Judge.

Chinsura, the 11th February 1935. (464—1)

In the Court of the District Judge of Hooghly.

NOTICE is hereby given, under clause (*2*) of section 12 of the Provincial Insolvency Act, V of 1920, to his creditors that the insolvency petition of Basanta Lal Agarwalla, son of late Ram Ch. Agarwalla, of Telinipara, thana Bhadreswar, district Hooghly, has been admitted by this Court as No. 6 of 1935 and that the 6th March 1935 has been fixed for the hearing thereof.

T. BANERJI, *for* District Judge.

Chinsura, the 11th February 1935. (463—1)

NOTICE OF ADJUDICATION ORDER.

In the Court of the District Judge of Jessore.

INSOLVENCY CASE No. 6 OF 1934.

Re Jahari Lal Sen of Kotechandpur, police-station Kotechandpur, district Jessore.

ON the 2nd day of February 1935, an order was made by this Court adjudging the abovenamed person as an insolvent, he being directed to apply for discharge within a year from that date.

K. C. DAS GUPTA, District Judge.

Jessore, the 14th February 1935. (511—1)

NOTICE OF ADJUDICATION ORDER.

In the Court of the District Judge of Jessore.

INSOLVENCY CASE No. 7 OF 1934.

Re Mahendra Nath Sen of Kotechandpur, police-station Kotechandpur, district Jessore.

ON the 2nd day of February 1935, an order was made by this Court adjudging the abovenamed person as an insolvent, he being directed to apply for discharge within a year from that date.

K. C. DAS GUPTA, District Judge.

Jessore, the 14th February 1935. (512—1)

NOTICE TO CREDITORS OF THE DATE OF HEARING OF AN INSOLVENCY PETITION.

Section 19 of the Provincial Insolvency Act, V of 1920.

In the Court of the District Judge at Midnapore.

INSOLVENCY APPLICATION No. 103 OF 1934.

WHEREAS Satish Chandra Ganguly, son of late Bharat Chandra Ganguly, of Nabinabagh, town Midnapore, district Midnapore, debtor, petitioner, has applied to this Court, by a petition, dated 22nd day of December 1934, to be declared an insolvent under the Provincial Insolvency Act, V of 1920, this is to give the creditors notice that the Court has fixed the 2nd day of March 1935 for the hearing of the aforesaid petition and the examination of the debtor.

[ILLEGIBLE], *for* District Judge.

Midnapore, the 6th February 1935. (422—1)

In the Court of the District Judge of Mymensingh.

INSOLVENCY CASE No. 42 OF 1934.

PURSUANT to a creditor's petition, dated the 1st day of September 1934, against his debtor Ziauddin Saheb, son of late Syed Abdul Rejak Saheb, of Dampara, police-station Kishoreganj, in the district of Mymensingh, and on the application of the creditor and reading his application and hearing his pleader, it is ordered that the said debtor be and the said debtor is hereby adjudged insolvent.

It is further ordered that the debtor do apply for his final discharge within six months.

Dated this 29th day of January 1935.

H. G. S. BIVAR, District Judge.

(332—1)

In the Court of the District Judge of Noakhali.

INSOLVENCY CASE No. 1 OF 1935.

NOTICE is hereby given that Kazi Mahammad Serajal Islam, son of late Kazi Nur Ahamed Miah, of Harishpur, police-station Sandwip, in the district of Noakhali, has, on the 22nd day of January 1935, applied to this Court for being adjudged an insolvent and the 9th March 1935 has been set down for hearing of the application.

J. DE, District Judge.

Noakhali, the 11th February 1935. (470—1)

In the Court of the District Judge of Noakhali.

INSOLVENCY CASE No. 2 OF 1935.

NOTICE is hereby given that Salamat Ullah, son of late Md. Yusuf Bhuiya, of Eklashpur, police-station Begumganj, in the district of Noakhali, has, on the 1st day of February 1935, applied to this Court for being adjudged an insolvent and the 9th March 1935 has been set down for hearing of the application.

J. DE, District Judge.

Noakhali, the 11th February 1935. (471—1)

In the Court of the District Judge of Pabna and Bogra.

INSOLVENCY CASE No. 22 OF 1934.

NOTICE is hereby given that insolvent Gandha Pramanik, son of late Ali Pramanik of Ekdanta, police-station Atgharia and district Pabna, has applied for his final discharge and the 7th March 1935 has been set down for hearing of the application.

B. K. BASU, District Judge.

Pabna, the 15th February 1935. (516—1)

In the Court of the District Judge of Pabna and Bogra.

INSOLVENCY CASE No. 1 OF 1935.

WHEREAS Naimuddin Fakir, son of late Lakhiuddin Fakir of Khalisadaha, police-station Faridpur and district Pabna, has applied to this Court by a petition, dated 2nd January 1935, to be declared an insolvent, this is to give notice to all his creditors that the Court has fixed the 8th March 1935 for hearing of the aforesaid application and for examination of the debtor.

B. K. BASU, District Judge.

Pabna, the 15th February 1935. (517—1)

NOTICE OF ADJUDICATION ORDER.

In the Court of the District Judge of Rajshahi.

INSOLVENCY CASE No. 55 OF 1934.

Re Jodu Pramanik of Mohanpur, police-station Singra, district Rajshahi.

ON the 29th day of January 1935 an order was passed by this Court adjudging the abovenamed as an insolvent.

A. L. BLANK, District Judge.

Rajshahi, the 14th February 1935. (563—1)

In the Court of the District Judge of Rajshahi.

INSOLVENCY CASE No. 2 OF 1935.

NOTICE is hereby given that Lalit Mohan Pal, son of late Beni Madhab Pal, of Bargachhi, police-station Natore, district Rajshahi, has applied under Act, V of 1920, to be adjudged an insolvent, and that 13th March 1935 has been fixed for hearing the application.

A. L. BLANK, District Judge.

Rajshahi, the 14th February 1935. (565—1)

NOTICE OF ADJUDICATION ORDER.

In the Court of the District Judge of Rajshahi.

INSOLVENCY CASE No. 42 OF 1934.

Re Mohammad Shafiuddin Mandal of Jogipara, police-station Bagmara, district Rajshahi.

ON the 18th day of January 1935 an order was passed by this Court adjudging the abovenamed as an insolvent.

A. L. BLANK, District Judge.

Rajshahi, the 14th February 1935. (566—1)

NOTICE OF ADJUDICATION ORDER.

In the Court of the District Judge of Rajshahi.

INSOLVENCY CASE No. 50 OF 1934.

Re Satish Chandra Bhattacherjee of Koarpur, police-station Palong, district Faridpur, at present Islamgati, police-station Atrai, district Rajshahi.

ON the 1st day of February 1935 an order was passed by this Court adjudging the abovenamed as an insolvent.

A. L. BLANK, District Judge.

Rajshahi, the 20th February 1935. (568—1)

NOTICE OF ADJUDICATION ORDER.

In the Court of the District Judge of Rajshahi.

INSOLVENCY CASE No. 54 OF 1934.

Re Kanchu Pramanik of Dhuliadanga, police-station Singra, district Rajshahi.

ON the 12th day of February 1935 an order was passed by this Court adjudging the abovenamed as an insolvent.

A. L. BLANK, District Judge.

Rajshahi, the 20th February 1935. (569—1)

NOTICE OF ADJUDICATION ORDER.

In the Court of the District Judge of Rajshahi.

INSOLVENCY CASE No. 47 OF 1934.

Re Neshar Mandal *alias* Neshar Shekh of Shitlai, Bhalukpara, police-station Paba, district Rajshahi.

ON the 18th day of December 1934 an order was passed by this Court adjudging the abovenamed as an insolvent.

A. L. BLANK, District Judge.

Rajshahi, the 20th February 1935. (570—1)

In the 4th Court of the Sub-Judge of 24-Parganas.

INSOLVENCY CASE No. 538 OF 1934.

Shaikh Kahiraddin of Alampore, police-station Budge Budge, applicant.

To Jaynarayan Gauri Sanker of 45, Adyaprosad Ghat Road of Calcutta, and others, creditors.

ON the 16th day of January 1935 it was ordered that the matter of the petition of the applicant be heard on the 11th day of March 1935 and that the said applicant do attend to be examined by this Court on that date.

J. N. SEN, Sub-Judge.

Alipore, the 17th January 1935. (230—1)

In the 4th Court of the Sub-Judge of 24-Parganas.

INSOLVENCY CASE No. 541 OF 1934.

Haridas Mukherjee of 9/B, Mahim Halder Street, Kalighat, applicant.

To Narsing Das Agarwalla of Kalighat and others, creditors.

ON the 10th day of January 1935 it was ordered that the matter of the petition of the applicant be heard on the 11th day of March 1935 and that the said applicant do attend to be examined by this Court on that date.

J. N. SEN, Sub-Judge.

Alipore, the 12th January 1935. (231—1)

In the 4th Court of the Sub-Judge of 24-Parganas.

INSOLVENCY CASE No. 544 OF 1934.

Nanda Lal Mitra of 5/D, Lake View Road, police-station Tollyganj, 24-Parganas, applicant.

To Sashi Bhusan Ghose of 23-1, Justice Dwarakanath Ghose Road and others, creditors.

ON the 11th day of January 1935 it was ordered that the matter of the petition of the applicant be heard on the 11th day of March 1935 and that the said applicant do attend to be examined by this Court on that date.

J. N. SEN, Sub-Judge.

Alipore, the 16th January 1935. (232—1)

In the 4th Court of the Sub-Judge of 24-Parganas.

INSOLVENCY CASE No. 6 OF 1935.

Panchu Charan Chakravartty of 3-2, Michael Dutta Street, Khidderpore, police-station Watgunge, applicant.

To Upendra Nath Dutta of 46, Strand Road, Calcutta, and others, creditors.

ON the 12th day of January 1935 it was ordered that the matter of the petition of the applicant be heard on the 11th day of March 1935 and that the said applicant do attend to be examined by this Court on that date.

J. N. SEN, Sub-Judge.

Alipore, the 15th January 1935. (233—1)

NOTICE TO CREDITORS OF APPLICATION FOR DISCHARGE.

Section 41 (*1*) of the Provincial Insolvency Act, V of 1920.

In the 4th Court of the Sub-Judge at Alipore.

INSOLVENCY CASE No. 455 OF 1933.

O. Gomes of 29-1, Convent Road, Entally, 24-Parganas, applicant.

TAKE notice that the abovenamed insolvent has applied at the Court for his discharge, and that the Court has fixed the 11th day of March 1935, at 11 o'clock, for hearing the application.

Dated this 17th day of January 1935.

J. N. SEN, Sub-Judge.

(238—1)

NOTICE TO CREDITORS OF APPLICATION FOR DISCHARGE.

Section 41 (*1*) of the Provincial Insolvency Act, V of 1920.

In the 4th Court of the Sub-Judge at Alipore.

INSOLVENCY CASE No. 538 OF 1933.

Shaikh Rabbani Molla of Chandipore, police-station Budge Budge, 24-Parganas, applicant.

TAKE notice that the abovenamed insolvent has applied at the Court for his discharge, and that the Court has fixed the 11th day of March 1935, at 11 o'clock, for hearing the application.

Dated this 10th day of January 1935.

J. N. SEN, Sub-Judge.

(239—1)

NOTICE TO CREDITORS OF APPLICATION FOR DISCHARGE.

Section 41(*1*) of the Provincial Insolvency Act, V of 1920.

In the 4th Court of the Sub-Judge at Alipore.

INSOLVENCY CASE No. 31 OF 1934.

Hari Bhakla Ghose of 18, Sultan Alam Road, police-station Tollygunge, applicant.

TAKE notice that the above-named insolvent has applied at the Court for his discharge, and that the Court has fixed the 11th day of March 1935 at 11 o'clock for hearing the application.

Dated this 15th day of January 1935.

J. N. SEN, Sub-Judge.

(240—1)

NOTICE TO CREDITORS OF APPLICATION FOR DISCHARGE.

Section 41(*1*) of the Provincial Insolvency Act, V of 1920.

In the 4th Court of the Sub-Judge at Alipore.

INSOLVENCY CASE No. 53 OF 1934.

Paran Krishna Das of Bangali Bazar, police-station Matiaburz, applicant.

TAKE notice that the above-named insolvent has applied at the Court for his discharge, and that the Court has fixed the 11th day of March 1935 at 11 o'clock for hearing the application.

Dated this 15th day of January 1935.

J. N. SEN, Sub-Judge.

(241—1)

NOTICE TO CREDITORS OF APPLICATION FOR DISCHARGE.

Section 41(*1*) of the Provincial Insolvency Act, V of 1920.

In the 4th Court of the Sub-Judge at Alipore.

INSOLVENCY CASE No. 104 OF 1934.

E. R. Olliver of 78, Traffic Quarters, Sealdah, applicant.

TAKE notice that the above-named insolvent has applied at the Court for his discharge, and that the Court has fixed the 11th day of March 1935 at 11 o'clock for hearing the application.

Dated this 14th day of January 1935.

J. N. SEN, Sub-Judge.

(242—1)

NOTICE TO CREDITORS OF APPLICATION FOR DISCHARGE.

Section 41(*1*) of the Provincial Insolvency Act, V of 1920.

In the 4th Court of the Sub-Judge at Alipore.

INSOLVENCY CASE No. 119 OF 1934.

Makbul Ahamed Khan of 17, Mominpore Road, Khidderpore, applicant.

TAKE notice that the above-named insolvent has applied at the Court for his discharge, and that the Court has fixed the 11th day of March 1935 at 11 o'clock for hearing the application.

Dated this 15th day of January 1935.

J. N. SEN, Sub-Judge.

(243—1)

NOTICE TO CREDITORS OF APPLICATION FOR DISCHARGE.

Section 41(*1*) of the Provincial Insolvency Act, V of 1920.

In the 4th Court of the Sub-Judge at Alipore.

INSOLVENCY CASE No. 184 OF 1933.

Sripati Pramanik of Burul, police-station Budge Budge, 24-Parganas, applicant.

TAKE notice that the above-named insolvent has applied at the Court for his discharge, and that the Court has fixed the 11th day of March 1935 at 11 o'clock for hearing the application.

Dated this 10th day of January 1935.

J. N. SEN, Sub-Judge.

(244—1)

In the 4th Court of the Sub-Judge of 24-Parganas.

INSOLVENCY CASE No. 11 OF 1935.

Data Ram of 1-1, Raja Monindra Road, Pakparah, police-station Chitpore, 24-Parganas, applicant.

To Shew Narayan Ram Narayan of 160, Harrison Road, Calcutta, and others, creditors.

ON the 16th day of January 1935 it was ordered that the matter of the petition of the applicant be heard on the 11th day of March 1935, and that the said applicant do attend to be examined by this Court on that date.

J. N. SEN, Sub-Judge.

Alipore, the 18th January 1935. (273—1)

In the 4th Court of the Sub-Judge of 24-Parganas.

INSOLVENCY CASE No. 12 OF 1935.

Sm. Sutia Turahin of Titagarh Puranabazar, 24-Parganas, applicant.

To Hari Saran Singh of Khardah, police-station Khardah, and others, creditors.

ON the 17th day of January 1935 it was ordered that the matter of the petition of the applicant be heard on the 11th day of March 1935, and that the said applicant do attend to be examined by this Court on that date.

J. N. SEN, Sub-Judge.

Alipore, the 18th January 1935. (274—1)

NOTICE TO CREDITORS OF APPLICATION FOR DISCHARGE.

Section 41(*1*) of the Provincial Insolvency Act, V of 1920.

In the 4th Court of the Sub-Judge at Alipore.

INSOLVENCY CASE No. 14 OF 1934.

Devendra Nath Ray of 19B, Priya Nath Mallick Road, police-station Bhowanipore, applicant.

TAKE notice that the abovenamed insolvent has applied at the Court for his discharge, and that the Court has fixed the 25th day of March 1935 at 11 o'clock for hearing the application.

Dated this 30th day of January 1935.

J. N. SEN, Sub-Judge.

(350—1)

NOTICE TO CREDITORS OF APPLICATION FOR DISCHARGE.

Section 41(*1*) of the Provincial Insolvency Act, V of 1920.

In the 4th Court of the Sub-Judge at Alipore.

INSOLVENCY CASE No. 44 OF 1934.

Abdul Gani *alias* Elahi Bux of 13, Budge Budge Road, Calcutta, applicant.

TAKE notice that the abovenamed insolvent has applied at the Court for his discharge, and that the Court has fixed the 18th day of March 1935 at 11 o'clock for hearing the application.

Dated this 25th day of January 1935.

J. N. SEN, Sub-Judge.

(351—1)

NOTICE TO CREDITORS OF APPLICATION FOR DISCHARGE.

Section 41 (*1*) of the Provincial Insolvency Act, V of 1920.

In the 4th Court of the Sub-Judge at Alipore.

INSOLVENCY CASE No. 146 OF 1934.

Dwarika Sha Kanu of Jagatdal, police-station Jagatdal, applicant.

TAKE notice that the abovenamed insolvent has applied at the Court for his discharge, and that the Court has fixed the 25th day of March 1935 at 11 o'clock for hearing the application.

Dated this 28th day of January 1935.

J. N. SEN, Sub-Judge.

(352—1)

NOTICE TO CREDITORS OF APPLICATION FOR DISCHARGE.

Section 41 (*1*) of the Provincial Insolvency Act, V of 1920.

In the 4th Court of the Sub-Judge at Alipore.

INSOLVENCY CASE No. 193 OF 1934.

Subodh Kumar De of 9, Chakraberia Lane, police-station Ballygunge, applicant.

TAKE notice that the abovenamed insolvent has applied at the Court for his discharge, and that the Court has fixed the 18th day of March 1935 at 11 o'clock for hearing the application.

Dated this 25th day of January 1935.

J. N. SEN, Sub-Judge.

(353—1)

In the 4th Court of the Sub-Judge of 24-Parganas.

INSOLVENCY CASE No. 37 OF 1935.

Ajit Kumar Das of 41, Gurpar Road, police-station Beliaghata, 24-Parganas, creditor, applicant.

To Satish Chandra Mitra of 33A, Gurpar Road, Calcutta, debtor.

ON the 22nd day of January 1935 it was ordered that the matter of the petition of the applicant be heard on the 5th day of March 1935, and that the said applicant do attend to be examined by this Court on that date.

J. N. SEN, Sub-Judge.

Alipore, the 25th January 1935. (385—1)

In the Court of the District Judge of 24-Parganas.

INSOLVENCY CASE No. 5 OF 1935.

R. D. C. Schmidt of 25, Belvedere Road, Alipore, 24-Parganas, applicant.

To Mohan Lall & Co., of 139, Surendra Nath Banerjee Road, Calcutta, and others, creditors.

ON the 2nd day of February 1935 it was ordered that the matter of the petition of the applicant be heard on the 11th day of March 1935, and that the said applicant do attend to be examined by this Court on that date.

T. H. ELLIS, District Judge.

Alipore, the 4th February 1935. (426—1)

In the Court of the District Judge of 24-Parganas.

INSOLVENCY CASE No. 6 OF 1935.

Ambica Charan Mukherjee of Kashba, Ballygunge, police-station Tollygunge, 24-Parganas, applicant.

To Kisori Lal Ganguly of 15-5, Nather Bagan Street, Calcutta, and others, creditors.

ON the 2nd day of February 1935 it was ordered that the matter of the petition of the applicant be heard on the 5th day of March 1935, and that the said applicant do attend to be examined by this Court on that date.

T. H. ELLIS, District Judge.

Alipore, the 4th February 1935. (427—1)

ORDER ANNULLING ADJUDICATION.

Section 43 of the Provincial Insolvency Act, V of 1920.

In the Court of the District Judge at Alipore.

INSOLVENCY APPLICATION No. 74 OF 1932.

Meghraj Missir, applicant.

WHEREAS Meghraj Missir of 113-5-A, Hazra Road, Bhowanipore, 24-Parganas, debtor, does not proceed with his application for discharge, it is ordered that the order of adjudication, dated 27th March 1933, against the debtor be and the same is hereby annulled.

Dated this 28th day of January 1935.

T. H. ELLIS, District Judge.

(550—1)

ORDER ANNULLING ADJUDICATION.

Section 43 of the Provincial Insolvency Act, V of 1920.

In the 4th Court of the Sub-Judge at Alipore.

INSOLVENCY APPLICATION No. 149 OF 1934.

Mon Mohan Roy, applicant.

WHEREAS Mon Mohan Roy of 63, Tollygunge Road, Tollygunge, 24-Parganas, debtor, does neither appear nor apply for discharge within the specified time fixed for hearing, it is ordered that the order of adjudication, dated the 28th July 1934, against the debtor be and the same is hereby annulled.

Dated this 28th day of January 1935.

J. N. SEN, Sub-Judge.

ORDER ANNULLING ADJUDICATION.

Section 43 of the Provincial Insolvency Act, V of 1920.

In the 4th Court of the Sub-Judge at Alipore.

INSOLVENCY APPLICATION No. 163 OF 1934.

Bolai Muchi, applicant.

WHEREAS Bolai Muchi of 105, Circular Garden Reach Road, Kidderpore, 24-Parganas, debtor, does neither appear nor apply for discharge within the date fixed for hearing, it is ordered that the order of adjudication, dated the 28th July 1934, against the debtor be and the same is hereby annulled.

Dated this 28th day of January 1935.

J. N. SEN, Sub-Judge.

ORDER ANNULLING ADJUDICATION.

Section 43 of the Provincial Insolvency Act, V of 1920.

In the 4th Court of the Sub-Judge at Alipore.

INSOLVENCY APPLICATION No. 188 OF 1934.

B. Routh, applicant.

WHEREAS B. Routh of 38, Cantopher Lane, police-station Beniapukur, 24-Parganas, debtor, does not proceed with his application for discharge, it is ordered that the order of adjudication, dated the 14th July 1934, against the debtor be and the same is hereby annulled.

Dated this 31st day of January 1935.

J. N. SEN, Sub-Judge.

ORDER ANNULLING ADJUDICATION.

Section 43 of the Provincial Insolvency Act, V of 1920.

In the 4th Court of the Sub-Judge at Alipore.

INSOLVENCY APPLICATION No. 392 OF 1933.

Syama Charan Samanta, applicant.

WHEREAS Syama Charan Samanta of Baneswarpur, police-station Falta, 24-Parganas, debtor, does neither appear nor apply for discharge within the specified time fixed, it is ordered that the order of adjudication, dated the 4th July 1934, against the debtor be and the same is hereby annulled.

Dated this 25th day of January 1935.

J. N. SEN, Sub-Judge.

MAULVI A. NURAL HAQUE intends to be admitted as an Advocate of the High Court.

(509—4)

KEDARMULL BRAHMIN intends to be admitted as an Advocate of the High Court.

(438—4)

TARACHAND SARAF intends to be admitted as an Advocate of the High Court.

(439—4)

MR. SAILENDRA NATH MITRA intends to be enrolled as an Advocate of the High Court, Calcutta.

(319—4)

MR. JALADHI NATH SADHU, B.L., intends to enrol as an Advocate of the Calcutta High Court.

(331—4)

MR. NIRANJAN SARKAR, M.A., B.L., intends to be enrolled as an Advocate of the Calcutta High Court.

(335—4)

MR. ABANI KANTA ROY, M.A., B.L., intends to be enrolled as an Advocate of the Calcutta High Court.

(336—4)

MR. SURJYA NARAYAN CHATTERJI, M.A., B.L., desires to be enrolled as an Advocate, Calcutta High Court.

(342—4)

MR. ATMARAM KHEMKA, M.A., B.L., desires to be enrolled as an Advocate of the Calcutta High Court.

(343—4)

MR. ANIL KUMAR MITTER, B.Sc., B.L., desires to be enrolled as an Advocate, Calcutta High Court.

(349—4)

MR. SAROJENDRA MOHAN ROY CHOWDHURY, M.A., B.L., desires to be enrolled as an Advocate of the Calcutta High Court.

(366—4)

MR. SHAIKH NABI BUKHSH, B.A., B.L., intends to practise as an Advocate, High Court, Calcutta.

(387—4)

MR. GURUPRASAD GHOSH intends to be enrolled as an Advocate of the High Court, Calcutta.

(388—4)

MR. BIBHOR KUMAR LAHIRI, B L., intends to practise as an Advocate, High Court.

(389—4)

MR. KAMAKHYA DAS BANDYOPADHYAY, B. Sc., B.L., intends to be enrolled as an Advocate, High Court.

(390—4)

JNANENDRA NATH BAKSI, M.A., B.L., desires to be enrolled as an advocate of the High Court.

(391—4)

KAMAKHYAPADA CHAKRABORTY, M.A., B.L., desires to be enrolled as an Advocate of the High Court.

(392—4)

MR. JOTINDRA MOHON PAUL intends to practice as an Advocate, High Court, Calcutta.

(393—4)

MONOHAR CHATTERJEE intends to be enrolled as an Advocate of the Calcutta High Court.

(394—4)

MR. BINODEBIHARI HALDER, M.A., B.L., intends to be enrolled as an Advocate, Calcutta High Court.

(395—4)

DHIRENDRANATH MUKHOPADHYAY, B.L., intends to be enrolled as an Advocate.

(396—4)

JITENDRA KUMAR MITRA, M.A., B.L., wishes to be enrolled as an Advocate of the Calcutta High Court.

(398—4)

MR. ACHYUTACHARAN CHATTOPADHYAY, B.L., desires to be enrolled as an Advocate of the High Court, Calcutta. (402—4)

MR. NIKHIL CHANDRA GANGOPADHYAY, B.L., desires to be enrolled as an Advocate of the High Court, Calcutta. (403—4)

MR. SATYA BHUSAN DE, B.L., intends to practise as an Advocate, High Court. (404—4)

MR. KIRAN CHANDRA BOSE, B.L., intends to be enrolled as an Advocate of the High Court, Calcutta.

(413—4)

MR. JAGAT CHANDRA SARKAR, M.A., B.L., intends to be enrolled as an Advocate of the High Court, Calcutta.

(414—4)

AMIYA NATH DEY, B.L., intends to be admitted as an Advocate of the High Court, Calcutta. (418—4)

MR. PANKOJ NATH MUKHERJI, B.L., desires to be enrolled as an Advocate of the Calcutta High Court.

(432—4)

MR. GIRIJA KUMAR DAWN intends to be enrolled as an Advocate of the Calcutta High Court. (405—4)

MR. MANORANJAN SEN, M.Sc., B.L., intends to be enrolled as an Advocate of the High Court, Calcutta.

(428—4)

MR. BHUPENDRA NATH DAS GUPTA intends to be enrolled as an Advocate.

(450—4)

MR. PRITIBHUSHAN BARMAN, B.L., desires to be enrolled as an Advocate of the Calcutta High Court.

(451—4)

MR. KALIDAS DE CHOUDHURI, M.A., B.L., intends to be enrolled as an Advocate, High Court.

(539—4)

MR. A. B. M. FAZLE RABBI intends to be enrolled as an Advocate, Calcutta High Court.

(540—4)

Public Service Commission (India).

APPLICATIONS are invited for the post of Veterinary Research Officer in charge of the Pathology Section at the Imperial Institute of Veterinary Research, Muktesar, in the General Central Service, Class I. (2) Candidates must possess an M.R.C.V.S. or equivalent veterinary diploma and must produce evidence that they have a first rate knowledge of both Pathology and Bacteriology and experience in conducting field researches in these subjects. A University degree in Science will be considered an additional qualification. (3) Pay in the scale of Rs. 275—300 (Probationary Period)—325—25—650—(Efficiency Bar)—35—1,000 *plus* Rs. 150 per mensem as special pay as Head of a Section at the Institute. Pay not subject to emergency cut. (4) Probation two years. (5) Government servants eligible if permitted to apply by their departments. (6) Last date for receipt of applications 18th March 1935. Prescribed application forms and further particulars may be obtained from the Secretary, Public Service Commission, Delhi. Applicants for forms must state the name of the post.

Delhi, the 14th February 1935.

(606—1)

APPLICATIONS are invited for the post of Physical Instructress for the Bethune College and the attached School on a fixed pay of Rs. 127-8 a month.

2. Holders of diplomas or certificates in physical education (including drill, gymnastics and games) recognised by Government will be eligible. Preference will be given to graduates. Applications with copies of certificates or diplomas and other credentials are to reach the Principal, Bethune College, by the 6th March 1935.

Draft Advertisement.

WANTED one temporary estimator on Rs. 100 per month and one temporary estimator on Rs. 60 per month (subject to 5 per cent. cut in both cases) for the office of the Superintending Engineer, Central Circle, Writers' Buildings, Calcutta.

Qualifications—B. E. degree (Calcutta University) and possession of some knowledge in designing and estimating re-inforced concrete structures essential for appointment in the higher grade, and Overseer's certificate of the Joint Technical Examination Board with knowledge of calculations of stresses and strains on structures necessary in the case of the lower grade post.

The period of the appointments will be up to the 29th February 1936, from the date of joining of the selected candidates, who must agree to stick to the posts up to that date.

Preference will be given to suitable Muhammadans.

Applications (stating qualifications, age and experience) will be received up to 1 p.m. of the 6th March 1935.

Personal interviews will not be granted.

F. H. HOGSHAW, Superintending Engineer,
Central Circle (*offg.*).

WANTED a Muhammadan Vernacular Teacher for the Chittagong Government Moslem High School, in the scale of Rs. 50—4-2—90—5-2—100.

Preference will be given to a Graduate with experience in teaching.

The application containing the following information should be submitted to this office on or before the 20th March 1935 :—

1. Name of father.
2. Native place—
   (*a*) Village.
   (*b*) Post Office.
   (*c*) Thana.
   (*d*) District.
3. Age on 1st March 1935 (calculated according to the Matriculation Certificate).
4. Teaching experience.

M. A. JAAFAR,
Inspector of Schools, Chittagong Division.

WANTED a District Engineer for the District Board of Pabna on a graded pay of Rs. 250—10—300—20—400 (efficiency bar) 400—20—500. Candidates must be qualified under the rules for the appointment of District Engineers as per Bengal Government notifications No. 1781-L. S.-G., dated the 12th December 1912, and No. 809, dated the 18th February 1922, according to which in addition to being a qualified Engineer of either an Indian or British University the candidate must have held charge of important works for not less than five years.

Candidates should apply in sealed and registered covers addressed to the Chairman, District Board, Pabna, and superscribed "Application for appointment of District Engineer" accompanied by all the original certificates and testimonials of conduct and work from his immediate superiors under whom he served, required by the rules, together with a suitable envelope addressed and sufficiently stamped for registration for returning the original certificates in the event of the application being unsuccessful. Applicants must state their ages, experience of professional works and places of residences.

Applications will be received by the undersigned up to the 5th March 1935. Selected candidate will not be allowed any joining travelling allowance. Canvassing in any form will disqualify a candidate.

ABDUR RASCHID MAHMOOD,
Chairman, District Board.

Pabna, the 4th February 1935. (423—3)

NOTICE is hereby given that all exhibits filed in cases desposed of in this Court during the year 1932 will be destroyed if not taken back before 31st March 1935 by parties who filed them.

N. N. GUPTA, Municipal Magistrate, Calcutta.

Town Hall, Calcutta, the 9th January 1935.

NOTICE is hereby given that all exhibits filed in cases disposed of in this Court during the year 1932 will be destroyed if not taken back before 31st March 1935 by the parties who filed them.

A. MAJID, Municipal Magistrate, Calcutta.

Town Hall, Calcutta, the 9th January 1935.

Road Cess Notification.

THE district board of Pabna on reconsideration at their special meeting held on the 30th January 1935, resolved, under section 46 of the Bengal Local-Self-Government Act, to levy road cess during the year 1934-35, at the maximum rate of six pies in the rupee on the annual value of all lands, etc., in the district of Pabna.

ABDUR RASCHID MAHMOOD, Chairman.

Pabna, the 12th February 1935. (485—2)

Road Cess Notification.

THE district board of Pabna at their special meeting held on the 30th January 1935, resolved, under section 46 of the Bengal Local-Self-Government Act, to levy road cess during the next year 1935-36, at the maximum rate of six pies in the rupee on the annual value of all lands, etc., in the district of Pabna.

ABDUR RASCHID MAHMOOD, Chairman.

Pabna, the 12th February 1935. (484—2)

Road Cess Notification.

IT is hereby notified for general information that under section 46 of Act III (B.C.) of 1885, the district board of Howrah at a special meeting held on the 2nd February 1935, resolved that road cess in the district for the year 1935-36 be levied at the maximum rate of six pies per rupee on the annual value of lands, etc.

P. ROY, Chairman, District Board.

Howrah, the 18th February 1935. (552—1)

Imperial Bank of India.

THE following appointment on the Bank's staff is hereby notified :—

Mr. F. H. Godwin to be Deputy Superintendent, Public Debt Office, Calcutta, as from the 17th February 1935, *vice* Mr. D. H. Stanger.

By order,
B. A. C. NEVILLE,
Secretary and Treasurer.

Calcutta, the 18th February 1935. (558— 1)

Imperial Bank of India.

THE following appointments on the Bank's staff are hereby notified :—

Mr. L. Pendrigh was in charge of Park Street Branch on the 26th January 1935, *vice* Mr. W. J. Lutley.

Mr. S. C. Das, Second Grade Assistant, Clive Street Branch, to act as Accountant at that Branch as from the 19th January 1935.

Mr. A. N. Bell to act as Agent, Chittagong Branch, as from the 27th January 1935, *vice* Mr. C. R. Trevor.

B. A. C. NEVILLE, Secretary and Treasurer.

Calcutta, the 20th February 1935. (564—1)

THE Bengal and Madras Service Family Pension Fund which is provisionally managed and assisted by Government has for its object the provision of monthly pensions for the maintenance of the widows and children of subscribers and is open, with certain exceptions, to all active and pensioned members of the Uncovenanted service of Government (except those serving under the Government of Bombay), and to Local Fund servants earning pensions from Government. Some of the special features of the fund are (1) that widowed daughters incapable of re-marriage or children labouring under such mental or bodily infirmities as incapacitate them from earning their livelihood or preclude the possibility of marriage (in case of a daughter) are admitted to its benefits ; and (2) that subscribers to the Widows and Daughters' branches are entitled to a refund of 30 per cent. of the premia paid, should the nominee predecease them after five years of admission. The second quinquennial valuation of the Fund has been completed by the Actuary to the Government of India, and his report discloses very favourable results. For forms of application and rules of the Fund apply to the Accountant-General, Bengal, Imperial Secretariat Buildings, Calcutta.

Doveton Trust Fund.

IN pursuance of rule 9 of the rules for the application of the Doveton Trust Fund, the undersigned hereby declares that he will select scholars to the benefits of the above Fund at his office, 40-1A, Free School Street, Calcutta, on April 1st, 1935. No candidate shall be eligible for selection who is under fourteen (14) years of age or over eighteen (18) years on the 28th February 1935. Candidates must be the members of the Domiciled European or Anglo-Indian Community of Bengal. Preference shall be given first to those who are orphans and then to the distressed. Forms of application for scholarships under the Doveton Trust Fund, which are obtainable from the above office, are required to be duly filled in and submitted before the 15th March 1935.

R. WOLFENDEN,
Inspector of European Schools, Bengal, and Administrator, Doveton Trust Fund.

Calcutta, the 13th February 1935.

Estate Alexander Aitken, deceased.

PURSUANT to section 360 of Act XXXIX of 1925 and section 42 of Act XXVIII of 1866, the creditors and all persons interested in the estate of Alexander Aitken, late of Tezpur, Assam, Land Surveyor and Civil Engineer, who died at Edinburgh, Scotland, on the 7th day of April 1934, and Letters of Administration to whose estate were granted by the High Court, Calcutta, on the 21st day of January 1935, are hereby required to submit particulars of their claims to the undersigned on or before the 25th day of March 1935, after which date the Administrator will distribute the assets, having regard only to the claims of which notice shall then have been received.

ORR, DIGNAM & CO.,
Solicitors to the Administrator.

32, Dalhousie Square, South, Calcutta, 11th February 1935.

(441—1)

Estate James Ewing, deceased.

PURSUANT to section 360 of Act XXXIX of 1925 and section 42 of Act XXVIII of 1866, the creditors and all persons interested in the estate of James Ewing, late an Engineer in the employ of the Hooghly Docking and Engineering Co., Ltd., No. 6, Howrah Road, Salkhia, Howrah, who died at Calcutta on the 14th day of September 1934, and Letters of Administration to whose estate were granted by the High Court, Calcutta, on the 14th day of December 1934, are hereby required to submit particulars of their claims to the undersigned on or before the 25th day of March 1935, after which date the Administrator will distribute the assets, having regard only to the claims of which notice shall then have been received.

ORR, DIGNAM & Co.,
Solicitors to the Administrator.

32, Dalhousie Square, South, Calcutta, 18th February 1935. (551—1)

Clarke, Rawlins, Ker & Co.

SINCE its inception nearly nine years ago, the business of the above firm has been conducted entirely by Capt. A. E. Ker. As from the 1st January 1935 Capt. Ker has arranged to assume the sole control and management of the business, and the London partners will retire from the partnership which has existed hitherto. But Clarke, Rawlins and Company will continue to act as London Agents for Clarke, Rawlins, Ker and Co. and vice versa, so that the close association between the two firms which has existed hitherto will be maintained. Notice is therefore hereby given that the partnership heretofore subsisting between William Hastings Beaumont, Esquire, the Right Honourable Sir Dennis Henry Herbert, P.C., K.B.E., M.P., Major Kenneth Macdonald Beaumont, D.S.O., and Captain Allan Ebenezer Ker, V.C., carrying on business as Solicitors, Notaries and Privy Council Agents at Temple Chambers, 6, Old Post Office Street, Calcutta, under the style or firm of Clarke, Rawlins, Ker and Company, has been dissolved as on the 31st day of December 1934 so far as concerns the said William Hastings Beaumont, Esq., the Right Honourable Sir Dennis Henry Herbert and Major Kenneth Macdonald Beaumont, who retire from the said firm.

Dated the 21st day of February 1935.

W. H. BEAUMONT.
DENNIS H. HERBERT.
K. M. BEAUMONT.
A. E. KER.

(611—1)

Currency Note.

PORTION of the following Currency Note of the Calcutta Circle is stated to have been destroyed, and payment of its value has been claimed by the person whose name is placed against the number. Any other person claiming a right to it is warned to communicate at once with the undersigned :—

Register No.	Number of note.	Value. Rs.	Name of claimant.
WD10—34/35	S/78, 030434	100	Fatik Karikar, village and post-office Kashimari, district Khulna.

K. K. CHETTUR, Currency Officer.
Currency Office, Calcutta, the 20th February 1935.

Currency Notes.

PORTIONS of the following Currency Notes of the Calcutta Circle are stated to have been destroyed, and payment of their value has been claimed by the person whose name is placed against the numbers. Any other person claiming a right to them is warned to communicate at once with the undersigned :—

Register No.	Number of notes.	Value. Rs.	Name of claimant.
WD11—34/35	RD/71, 59511,	100	Gouri, son of Nekko Mahajan, village Uchapind, post-office Billawar, tahsil Basohli, district Kathua, Jammu State.
	RE/67, 37546.	100	

K. K. CHETTUR, Currency Officer.
Currency Office, Calcutta, the 20th February 1935.

In the matter of the Indian Companies Act, 1913, and

In the matter of the Jhalakati Loan Office, Limited.

NOTICE is hereby given that at an extraordinary general meeting held on the 10th February 1935, the abovenamed Company has, by an extraordinary resolution, been put into voluntary liquidation and Sjt. Ananta Kumar Das Gupta of 28, Amherst Street, Room No. 25, has been appointed liquidator.

JITENDRANATH BOSE, President.
(448—1)

In the matter of the Indian Companies Act, 1913, and

In the matter of the Jhalakati Loan Office, Limited.

NOTICE is hereby given that a meeting of the creditors of the above-named Company will be held on the 10th March 1935, at 3-30 p.m., at the office of the Company at Jhalakati, Barisal.

ANANTA KUMAR DAS GUPTA, Liquidator.
(449—1)

In the matter of the Provident Insurance Societies Act, V of 1912, and

In the matter of the Bharat Provident Society, Comilla.

AT an extraordinary general meeting of the members of the above-named Society, duly convened and held at its registered office at Comilla on the 9th and 25th of January 1935, the following special resolution was passed and confirmed :—

That as the Society has got no fund to carry on its business and in the opinion of the managing committee under the present circumstances the Society cannot continue its business and it is advisable to wind up the Society voluntarily, and that Babus Bejoy Kumar Chakraborty, Comilla, Nishi Kanta Biswas, Comilla, Sailesh Benode Sen Gupta, Calcutta, Sailendra Binode Sen Gupta, Calcutta, and Suresh Chandra Nag, Calcutta, were appointed joint liquidators for the purpose of such winding up.

SAILENDRA BINODE SEN GUPTA, Chairman.
Comilla, the 25th January 1935. (466—1)

IN THE HIGH COURT OF JUDICATURE AT FORT WILLIAM IN BENGAL.

Ordinary Original Civil Jurisdiction.

In the matter of the Indian Companies Act, and

In the matter of Pioneer Agriculture Firm, Ltd.

NOTICE is hereby given that a petition for the winding up of the abovenamed Company by the Hon'ble High Court was on the 18th day of February 1935 presented to the said Court by Ranajit Ray and Amiyanath Ray, Receivers appointed in Suit No. 1949 of 1932 (Hindusthan Co-operative Insurance Society, Ltd. *versus* Co-operative Hindusthan Bank, Ltd.) of No. 6, Church Lane, Calcutta, creditors of the abovenamed Company; and that the said petition is directed to be heard before the Court on the 18th day of March 1935, and any creditor or contributory of the said Company desirous of opposing an order for the winding up of the said Company under the above Act should appear at the time of hearing by himself or his attorney or advocate for that purpose, and a copy of the petition will be furnished to any creditor or contributory of the said Company requiring the same by the undersigned on payment of the prescribed charge for the same.

Dated 19th day of February 1935.

DUTT & SEN,
Attorneys for the petitioner abovenamed,

No. 6, Old Post Office Street, Calcutta.

Note.—Rule 41 provides that any person who intends to appear on the hearing of the said petition must serve on or send by post to the abovenamed, notice in writing of his intention so to do. The notice must state the name and address of the person or, if a firm, the name and address of the firm, and must be served or, if posted, must be sent by post in sufficient time to reach the abovenamed not later than two clear days before the 18th day of March 1935.

(560—1)

In the matter of the Indian Companies Act, VII of 1913, and In the matter of the Bridge and Roof Company (India), Limited.

NOTICE is hereby given that the Order of the High Court of Judicature at Fort William in Bengal dated the 14th day of January 1935 confirming the reduction of the capital of the abovenamed Company by cancelling a sum of Rs. 6 per share as lost or unrepresented by available assets upon the footing that the amount so cancelled or any part thereof may be called up again and the Minute (approved by the Court) showing with respect to the capital of the Company as altered the several particulars required by the above statute were registered by the Registrar of Joint Stock Companies on the 14th day of February 1935.

AND further take notice that the said Minute is in the words and figures following :—

"The Capital of the Company is Rs. 10,00,000 divided into 100,000 shares of Rs. 10 each.

Upon any increase of capital the Company is to be at liberty to issue any new shares with any preferential deferred qualified or special rights, privileges or conditions attached thereto.

The rights for the time being attached to any shares having preferential deferred qualified or special rights, privileges or conditions attached thereto may be altered or dealt with in accordance with the Articles of Association of the Company but not otherwise."

Dated this 19th day of February 1935.

SANDERSONS & MORGANS,

Solicitors for the Company, 26, Dalhousie Square, Calcutta. (561—1)

In the matter of the Indian Companies Act, VII of 1913, and In the matter of the Kuti Star Insurance Company (in liquidation).

NOTICE is hereby given that in an extraordinary general meeting of the members of the abovenamed Company held on the 10th February 1935, it has been resolved that it has been proved to the entire satisfaction of the meeting that the Company by reason of its liabilities cannot continue its business and that it is advisable to wind up, and the Company is hereby wound up voluntarily and that Mr. Jagabandhu Saha of Kuti, Tippera, be and is hereby appointed liquidator for the purpose of such winding up at a fixed remuneration of Rs. 50 only.

NANDA KUMAR ROY, Chairman.

Kuti, Tippera, the 11th February 1935. (541—1)

In the matter of the Indian Companies Act, VII of 1913, and In the matter of the Kuti Star Insurance Company (in liquidation).

NOTICE is hereby given pursuant to section 209 that a meeting of the creditors of the abovenamed Company in voluntary winding up shall be held on 5th March 1935, at 2 p.m. at the liquidator's office at Kuti, Tippera.

JAGABANDHU SAHA, Liquidator.

Kuti, Tippera, the 16th February 1935. (542—1)

In the matter of the Indian Companies Act, VII of 1913, and In the matter of the Dhruba Tara Insurance and Banking Corporation, Limited (in liquidation).

NOTICE is hereby given that in an extraordinary general meeting of the shareholders of the abovenamed Corporation held on the 16th February 1935, it has been resolved that it has been proved to the entire satisfaction of the meeting that the Corporation by reason of its liabilities cannot continue its business and that it is advisable to wind up, and the Corporation is hereby wound up voluntarily and that Mr. Satish Chandra Saha of Kuti, Tippera, be and is hereby appointed liquidator for the purpose of such winding up at a fixed remuneration of Rs. 50 only.

MONO MOHON ROY, Chairman.

Kuti, Tippera, the 16th February 1935. (543—1)

In the matter of the Indian Companies Act, VII of 1913, and In the matter of the Dhruba Tara Insurance and Banking Corporation, Limited (in liquidation).

NOTICE is hereby given pursuant to section 209 that a meeting of the creditors of the abovenamed Company in voluntary winding up shall be held on the 13th March 1935, at 2 p.m., at the liquidator's office at Kuti, Tippera.

SATISH CHANDRA SAHA, Liquidator.

Kuti, Tippera, the 18th February 1935. (544—1)

In the matter of the Indian Companies Act, VII of 1913, and In the matter of the Adrista Insurance Society (in liquidation).

NOTICE is hereby given that in an extraordinary general meeting of the members of the abovenamed Society held on the 16th February 1935, it has been resolved that it has been proved to the entire satisfaction of the meeting that the Society by reason of its liabilities cannot continue its business and that it is advisable to wind up, and the Society is hereby wound up voluntarily and that Mr. Lal Mohan Saha of Kuti, Tippera, be and is hereby appointed liquidator for the purpose of such winding up at a fixed remuneration of Rs. 25 only.

R. B. DUTTA, Chairman.

Kuti, Tippera, the 16th February 1935. (545—1)

In the matter of the Indian Companies Act, VII of 1913, and In the matter of the Adrista Insurance Society (in liquidation).

NOTICE is hereby given pursuant to section 209 that a meeting of the creditors of the abovenamed Company in voluntary winding up shall be held on the 15th March 1935, at 2 p.m., at the liquidator's office at Kuti, Tippera.

LAL MOHAN SAHA, Liquidator.

Kuti, Tippera, the 18th February 1935. (546—1)

NOTICE OF CREDITORS MEETING.

In the matter of the Indian Companies Act, 1913, and In the matter of the Buddhist Trading and Banking Association, Ltd., Cox's Bazar (in liquidation).

A meeting of the creditors of the above Company under section 209(*1*) of the Indian Companies Act, 1913, will be held on the 1st March 1935, in the registered office of the Company at 3 p.m. All creditors, therefore, are hereby required to attend.

MOHINI MOHAN DUTTA,
PHATHAW,
Liquidators.

Cox's Bazar, Chittagong, the 14th February 1935. (572—1)

Descriptive Catalogue of Sanskrit Manuscripts.

PARTS I, II and III of a Descriptive Catalogue of the Sanskrit Manuscripts in the Library of the Calcutta Sanskrit College, prepared by Pandit Hrishikesh Sastri and Babu Siva Chandra Gui, M.A., B.L., of that College, are offered to the public for sale. The Catalogue having to be completed in 23 parts the price of each part is 12 annas a copy exclusive of postage. Copies can be obtained from the Principal of the Sanskrit College, Calcutta.

Imperial Library.

(Secretariat Buildings, 6, Esplanade East, Calcutta). Open on—

Week days and Saturdays from 10 a.m. to 7 p.m.
Sundays and Gazetted holidays from 2 p.m. to 5 p.m.

THE Imperial Library is also a Lending Library. It is free to all except children. There is no subscription pay.

K. M. ASADULLAH, Librarian.

CINCHONA FACTORY PRODUCTS.

By order of the Government of Bengal Cinchona Factory Products as manufactured and packed at the Cinchona Factory, Mungpoo, Darjeeling district, will be sold and distributed by the Superintendent of the **Presidency Jail**, *in original packages* as received from the Mungpoo Factory, at the rates herein noted **from the 1st May 1926 :—**

Quinine Sulphate.

For 60 lbs. and upwards at a time .. Rs. 18 per lb.

For 6 lbs. and over but less than 60 lbs. at a time .. .. .. „ 19 „

For any quantity less than 6 lbs. .. „ 20 „

Totaquina.

Irrespective of quantity .. Rs. 13-8 per lb.

Quinine Hydrochloride.

For 60 lbs. and upwards at a time .. Rs. 23 per lb.

For 6 lbs. and over but less than 60 lbs. at a time .. .. .. „ 24 „

For any quantity less than 6 lbs. .. „ 25 „

Quinine Di-Hydrochloride.

For 60 lbs. and upwards at a time .. Rs. 25 per lb.

For 6 lbs. and over but less than 60 lbs. at a time .. .. .. „ 26 „

For any quantity less than 6 lbs. .. „ 27 „

Quinidine Sulphate.

For 60 lbs. and upwards at a time .. Rs. 20 per lb.

For 6 lbs. and over but less than 60 lbs. at a time .. .. .. „ 21 „

For any quantity less than 6 lbs. .. „ 22 „

Cinchonidine Sulphate.

For 60 lbs. and upwards at a time .. Rs. 25 per lb.

For 6 lbs. and over but less than 60 lbs. at a time .. .. .. „ 26 „

For any quantity less than 6 lbs. .. „ 27 „

Cinchonine Sulphate.

For 60 lbs. and upwards at a time .. Rs. 12 per lb.

For 6 lbs. and over but less than 60 lbs. at a time .. .. .. „ 13 „

For any quantity less than 6 lbs. .. „ 14 „

*Cinchona Febrifuge (Powder).

For 60 lbs. and upwards at a time .. Rs. 9 per lb.

For 6 lbs. and over but less than 60 lbs. at a time .. .. .. „ 9 „

For any quantity less than 6 lbs. .. „ 10 „

*Cinchona Febrifuge (Tablets).

For 60 lbs. and upwards at a time .. Rs. 10 per lb.

For 6 lbs. and over but less than 60 lbs. at a time .. .. .. „ 10 „

For any quantity less than 6 lbs. .. „ 11 „

Quinoidine (Tablets).

For 60 lbs. and upwards at a time .. Rs. 5 per lb.

For 6 lbs. and over but less than 60 lbs. at a time .. .. .. „ 5 „

For any quantity less than 6 lbs. .. „ 6 „

Quinoidine (in Mass).

For 60 lbs. and upwards at a time .. Rs. 4 per lb.

For 6 lbs. and over but less than 60 lbs. at a time .. .. .. „ 4 „

For any quantity less than 6 lbs. .. „ 5 „

Cinchona Bark (in 50 pound original bags).

Per bag .. .. .. Rs. 25.

Quinine Tablets per box of 200 tablets each.

Rs. 2-8 (Bengal), Rs. 3 (outside Bengal)

Rs. 15-8-0 per lb.

Transit charges extra in every case.

***Cinchona Febrifuge** is for sale to Government and Charitable Institutions, Local Bodies and Missionaries only. **It is not for sale to Private Firms or the General Public.**

Quinine Sulphate is now open for sale to the Public at the above rates. But it will be supplied to Hospitals and Dispensaries of this Presidency only at the wholesale rate of Rs. 18 per pound irrespective of quantities.

Five and ten boxes of Quinine Tablets are sold to the public at the concession rates which will be intimated on application.

Provinces other than Bengal, Bihar and Orissa and Assam will get their supplies of Sulph. Quinine from the Director, Botanical Survey of India, Sibpur, Howrah.

Local sale at the jail gate from 10 to 12 noon.

The system of payment is by—*Cash in advance*—by "*Treasury Challans*," which should accompany the order or indent.

In cases where this is not possible, payment should be made by "*Remittance Transfer Receipts*" or crossed "*Cheques.*"

Indents unaccompanied by cash in advance will be sent Value Payable Post. Credit sale is not allowed except under special circumstances.

In the case of *Government officers* payments will be recovered by *Book Transfer, i.e., Countersigned Invoices*, in the event of *Cash* not accompanying the indent by "*Treasury Challans*," *Remittance Transfer Receipt or Cheque.*

2. Price and postage must accompany the price of the drug (when the drug is required by post).

The name of the Railway and Steamer Station or Post Office must be written distinctly when the parcels are required by Rail, Steamer or by Post. Railway parcels are sent by passenger train only.

A scale of postage is given below.

	1 oz.	2 ozs.	4 ozs.	½ lb.	¾ lb.	1 lb.
	As.	As.	As.	As.	As.	Rs. A.
Quinine Sulph. ..	..	..	7	7	11	0 11
Cinchona Feb. ..	..	..	7	7	11	0 11
Cinchona Feb. Tablets	..	..	7	7	11	0 11
Quinoidine Tablets ..	..	..	..	..	..	1 13
Quinine Hydrochlor. ..	5	5	7	7	..	0 11
Quinine Di-hydrochlor.	5	5	7	7	..	0 11
Quinine Tablets ..	..	..	7	7	11	0 11

	1½ lb.	2 lb.	3 lb.	4 lb.	5 lb.	6 lb.
	Rs. A.	Rs. A.	Rs. A.	Rs. A.	Rs. A.	Rs. A.
Quinine Sulph. ..	0 15	1 3	1 7	1 15	2 7	2 15
Cinchona Feb. ..	0 15	0 15	1 7	1 11	1 15	2 7
Cinchona Feb. Tablets	1 3	1 3	1 11	1 15	2 7	2 15
Quinoidine Tablets ..	..	2 3	2 3	..	..	..
Quinine Hydrochlor. ..	1 1	0 15	1 7	1 11	..	..
Quinine Di-hydrochlor.	1 1	0 15	1 13	2 5	..	..
Quinine Tablets ..	0 15	0 14	1 7	1 11	1 15	2 3

Two different drugs are not packed in the same parcel and postage must be paid separately for each kind.

N.B.—Postage stamps are not accepted as revenue.

Government reserve the right to alter the price without notice.

Registered No. C207

The Calcutta Gazette

THURSDAY, FEBRUARY 28, 1935.

PART IV

Bills introduced in the Bengal Legislative Council, Reports of Select Committees presented or to be presented to that Council, and Bills published before introduction in that Council.

BENGAL LEGISLATIVE COUNCIL DEPARTMENT.

NOTIFICATION.

No. 1115L.C.—25th February, 1935. — The following report of the Select Committee on the Court-fees (Bengal Amendment) Bill, 1935, with the Bill embodying amendments recommended by the Committee, is hereby published for general information:—

Report of the Select Committee on the Court-fees (Bengal Amendment) Bill, 1935.

We, the members of the Select Committee of the Bengal Legislative Council to which the Court-fees (Bengal Amendment) Bill, 1933, was referred by a motion carried in the Bengal Legislative Council on the 11th December, 1934, have the honour to submit this our report with the Bill embodying amendments recommended by us annexed. All matter recommended to be omitted by the Select Committee has been printed in *italics* and enclosed in square brackets and all new matter recommended to be inserted has been underlined.

2. The Bill was published in English in the *Calcutta Gazette* of the 18th January, 1934.

3. We do not consider that the Bill has been so altered as to require republication.

4. The Committee met for the first time on the 29th January, 1935, and concluded its sittings on the 5th February, 1935.

5. The more important changes made in the Bill are as follow :—

Clause 1.—We have altered the figures "1933" to "1935".

Clause 3.—In clause 3 in proposed section 2 (*3*) we have provided that the Collector may not delegate his powers to any officer below the rank of a sub-deputy collector.

(*2*) In clause 3 in proposed section 2 (*4*) we have provided that a suit shall include an appeal from a decree only, as appeals from interlocutory and other orders were obviously not intended to be included.

We have omitted the latter portion as being unnecessary, as paragraphs v, vi and vii of section 19 refer only to the law in force in Madras which has no application in Bengal.

Clause 6.—We have provided in proposed section 6 (*1*) that normally, before a document can be filed, etc., in mufassal courts or in public offices the proper court-fee shall have already been paid. We have, however, provided a relaxation of this rule in proposed section 6 (*2*) whereby a court may receive a plaint or memorandum of appeal with insufficient court-fees, but such plaint or memorandum of appeal will not be registrable until a reasonable sum, to be assessed summarily by the court, on account of court-fee has been paid within a time to be fixed by the court. This follows, in a modified form, the existing proviso proposed by clause 6 of the Bill as introduced, which we have, accordingly, omitted.

Clause 7.—We have recommended the omission of the proposed provisos to clause iv of section 7. The first is otiose, as we propose to omit proposed paragraph viB from clause 7(*5*). We do not consider that the restriction referred to in the second proviso is necessary.

(*2*) We have, by a majority, recommended an important change in clause 7(*3*) by providing that, instead of the court, in the first instance, proceeding on the basis of the market-value, as in the Bill as introduced, it shall compute the court-fee chargeable at 15 times the nett profits ; we have further provided that if the amount of profits is in doubt, the court may assess them. Only when the court cannot readily ascertain or assess the nett profits shall the fee be charged according to the market-value. We consider this method more equitable.

(*3*) In sub-clause (*5*) we have omitted clause (*a*) of paragraph viA, with the proviso, and have provided in clause 19 of the Bill, by amendment of Schedule II, that a fixed fee of Rs. 15 shall be charged in cases of claims of all kinds in respect of joint property.

We have further limited the application of paragraph viA to cases where there is ouster in order to assimilate the statute law to the prevailing case law.

(*4*) We have, by a majority, omitted paragraph viB as we do not consider the proposed change to be necessary.

Clause 8.—The omission of proposed section 7A follows as a consequence of the various changes made by our recommendations whereby valuation is left to be decided by the courts at their discretion.

(*2*) We have, by a majority, recommended the omission of proposed section 7B as we think it inequitable that any such court-fee should be paid in Land Acquisition cases.

Clause 9.—Proposed sections 8A to 8D have been omitted and re-drafted as new proposed sections 8A and 8B.

The principal modification suggested by us, and contained in proposed section 8B, is a direction to the court to come to a preliminary finding, at the earliest opportunity, on the question whether a sufficient court-fee has been paid on a plaint or memorandum of appeal, and to stay further proceedings in the case until the correct court-fee has been paid or a sufficient security for due payment has been furnished. Failing this, the case shall be dismissed. We do not consider that these provisions should extend to other classes of court-fees.

In proposed section 8A we have provided that further particulars need not be furnished if they already appear in the plaint. As other rule-making powers have been eliminated from proposed section 35A in clause 17, there is no object in requiring that the form of the statement should be prescribed in statutory rules, and we have remedied this by a small amendment.

Provision has been made in clause 12, as re-drafted, for the recovery of insufficient court-fees in certain limited instances as a public demand.

(*2*) We have provided in proposed section 8E that the court itself and no other authority should hold or direct inquiry into the valuation of suits. The reference to the holding of an inquiry by the Collector, in certain cases, has, therefore, been omitted.

(*3*) Sub-section (*2*) of proposed section 8E has been transferred as proposed sub-section (*2*) of proposed section 8F as being more appropriate in that context.

We have, however, made an emendation by which it is left to the court to determine what party to the suit should pay for the costs of the inquiry, as we foresee that the original provisions as introduced may operate inequitably.

We have further provided that costs may be called for from time to time, so as to avoid the somewhat harsh provisions of proposed section 8-I (*2*).

(*3*) The emendation in proposed section 8F, as originally introduced, and now 8F(*1*) is merely consequential.

(*4*) Proposed section 8G has been omitted consequentially upon our decision to restrict the inquiry as to valuation of suits to the courts.

(*5*) The changes in proposed sections 8H and 8-I (*1*) are purely consequential.

Proposed sub-section (*2*) of section 8-I has been omitted as unnecessary as provision for this has already been made by our amendment of proposed section 8F(*2*).

(*6*) The Committee, by a majority, did not see the necessity for a statutory provision such as proposed section 8J and have, therefore, omitted it.

(*7*) In the case of proposed section 8K, the majority of the Committee came to the conclusion that the benefit sought by this provision would be illusory owing to the many varying factors which frequently have to be taken into consideration in valuations, and felt that it would be extremely difficult to try and regulate the procedure for such valuations by rules framed by the executive. They have, therefore, recommended the omission of this section.

Clause 11.—The Committee have recommended the omission of proposed section 11 (*2*) as being unnecessarily harsh and also inequitable.

Clause 12.—The changes in this clause are to be read with the re-draft of proposed new sections 8A and 8B. We have also provided for the recovery of court-fees in certain cases as a public demand.

Clause 14.—The omission of sub-clause (*b*) is merely consequential.

Clause 17.—We have omitted this clause as being unnecessary in view of the emendations recommended by us in the provisions of the Bill referred to in sub-clauses (*a*), (*c*), (*d*) and (*e*) of sub-clause (*2*).

The only case in which the Bill, as altered by us, requires the Local Government to prescribe anything in the nature of a rule is the provision in proposed section 8A as to the form of the statement of particulars of the subject matter of suits. As we have provided for this in proposed section 8A itself, there is no necessity for retaining this rule-making section.

Clause 18.—Sub-clause (*1*) has been omitted as consequential on the omission of proposed section 7B in clause 8.

(*2*) Sub-clause (*2*) has been omitted as this matter is being more fully dealt with by the Court-fees (Bengal Amendment) Bill, 1935, to be introduced in the current session by the Hon'ble the Finance Member.

Clause 19.—Sub-clause (*a1*) has been inserted in place of clause (*a*) omitted from proposed paragraph viA in clause 7(*5*).

(*2*) In sub-clause (*2*), we have substituted a fee of " fifteen " rupees for " one-hundred " rupees as we consider the former figure to be a reasonably sufficient fee for the kind of case to which it relates.

Clause 20.—The omission of this clause is consequential on the omission of clause 18 (*2*) which it was designed to supplement.

We recommend that the Bill, as reported on by us, be passed.

The official members on the Committee desire to make it clear that as the changes made in clause 6 (*2*), proposed sub-section (*2*) of section 6 and clause 7 (*3*), proposed paragraph v of section 7 require the previous sanction of the Governor-General and the Governor respectively they are unable to accept responsibility for them in the absence of such sanction.

B. L. MITTER,
Member-in-charge.

A. deC. WILLIAMS.
N. G. A. EDGLEY.
*S. C. NANDY.
*A. R. E. LOCKHART
*ABUL QUASEM
*TAMIZUDDIN KHAN.
AKSHOY KUMAR SEN.
N. K. BASU.
MOHINI NATH BASU.
KHETTER MOHAN RAY.
HEM CHANDRA ROY CHOUDHURI.
LALIT KUMAR BAL.
*H. S. SUHRAWARDY.

J. W. McKAY,
Secretary to the Bengal Legislative Council.

*Signed subject to his minute of dissent annexed.
N. B.—The signatures of Babu Jatindra Nath Basu and Khan Bahadur Muhammad Abdul Momin had not been received up to the time of publishing the Report.

Minute of dissent by Maharaja Sris Chandra Nandy, of Kasimbazar, M.L.C.

It was the considered opinion of the Taxation Enquiry Committee that the imposition of court-fees should generally follow the cost of service principle. "While the pitching of scale of fees so as to produce a revenue just sufficient to cover all the costs of the administration of civil justice is an ideal to be aimed at," to quote the report of the Committee, "financial considerations may justify the state charging something more, provided that the fees charged are not such as to cause substantial hardship to any class and particularly to the poorer litigants." No one will deny that the administration of justice in this province yields a substantial surplus over and above the outlay involved in it and that the charges of litigation should have to be considerably curtailed if justice is to be made available to the poorer people. If therefore any amendment to the existing Act is to be carried it needs to be carried out in a manner so as to make administration of justice less costly. The attempt to charge the basis of valuation in respect of suits relating to land is an ingenious method of enhancement of receipts under court-fees and is therefore to be deprecated.

It is on this ground generally that I cannot approve of the changes sought to be made in sub-clauses (*3*), (*4*) and (*5*) of clause 7, relating to the valuation in suits relating to land. Under the existing Act different criteria are provided for different kinds of property. A permanently settled estate or a definite share of it separately assessed and entered in the Collector's register, is to be valued at 10 times the annual revenue; a temporarily settled estate, or a definite share of it separately recorded as paying revenue to the Government, at five times the annual revenue; a revenue free property at fifteen times the nett profits of the preceding year, and where no such nett profits have arisen with reference to the value of the similar land in the neighbourhood; part of a revenue-paying estate not separately assessed, at the market-value of land; houses and gardens also at the market-value. This appears to be a fair and equitable method of valuation. Besides it must be borne in mind that if in certain categories of lands the original Act did not seek to introduce the principle of valuation according to market-value there had been certain cogent administrative reasons behind it, not to speak of the historical reasons. There are no doubt anomalies in the working of the present Act; but the procedure suggested in clauses 7(*3*), (*4*) and (*5*) of the amending Bill is most certainly not the way of removing them. On the other hand the expression "market-value" itself is a vague one as it is uncertain and variable and when the ascertainment of value under this principle is left at the discretion of the Collector any number of complexities and difficulties may arise under this system.

Besides another very important principle is involved in this new method of valuation. I do not like to enter into the question whether land revenue in the permanently-settled areas has any relation to the actual value of the land. What I like to emphasise at the present moment is that the Government is clearly not justified to take advantage of the increased value of the land in adding to the public revenue by an indirect encroachment on the Permanent Settlement. In Bihar and Orissa and Madras, in the case of permanently settled estates court-fee has been made payable upon 20 times the revenue payable and in the case of estates not permanently settled court-fee has been made payable upon 10 times the revenue. If the Government thinks that the valuation made in section 7 of the Court Fees Act is an under-valuation, I can well understand a proposal for increment in the lines of the amending Act in Bihar and Orissa and Madras. Certainly the amount of land revenue paid is a more stable factor than a fluctuating market-value, a method which would entail an element of undue hardship on the litigant public and at the same time, plenty of administrative difficulties.

My colleagues propose a modification of sub-clause (*3*) of clause 7 by introducing the principle of nett profits. I do not see how this principle will improve matters in any way. My objections as to the principle of market-value apply *mutatis mutandis* to the principle of nett profits as well.

Subject to the above I generally agree with the changes in the Bill proposed by my colleagues.

Minute of dissent by Mr. A. R. E. Lockhart, M.L.C.

Clause 8 (proposed section 7B).—I do not agree to the omission by the Select Committee of proposed section 7B. It is a common knowledge that excessive claims are frequently made in references in land acquisition cases because there is no charge for such references. In the great majority of cases the Collector's award is upheld and the time of the court has thus been wasted by what was probably a frivolous reference. Legitimate grievances need not be discouraged by the clause in question as provision is made in the Land Acquisition Act that the costs of the reference, including the Court-fee, will ordinarily be paid by the Collector if the award goes against him. Genuine applicants for a slight and not fantastic increase in the claims, if not successful, would not be charged an amount incommensurate with the time of the Court involved in the hearing of the reference. I suggest this clause be reinstated.

Minute of dissent by Maulvi Abul Quasem, M.L.C.

Although I gladly recognise that the Bill has emerged from the Select Committee shorn of some of its most objectionable features, I am bound to say that there are still provisions which in my opinion cannot be supported. The primary object of the Bill is stated to be to provide a suitable machinery for preventing the evasion of the existing law relating to court-fees, but provisions have been included which are bound to have the effect of increasing court-fees, and which, therefore, must be resisted. I would refer in particular to clause 7, sub-clause (*3*) of the Bill, wherein a totally new paragraph has been recommended to be substituted for the existing paragraph V in section 7 of the Act. The existing paragraph recognises and provides for the difference that actually exists in the value of different kinds and classes of land; the substituted clause ignores this difference and prescribes a uniform fee of fifteen times the nett profits, where these are readily ascertainable. This is manifestly improper and unjust and would work intolerable hardship. The paragraph as originally proposed in the Bill would seem to have been better and less objectionable. Little time has been allowed to record in detail my other objections to the Bill. I intend to place them all before the Council in the shape of amendments.

Minute of dissent by Maulvi Tamizuddin Khan, M.L.C.

I do not agree with the decision of the majority of the Committee in respect of clause 7 (*3*). The majority decision is that in suits for possession of lands of every kind and description the court-fees chargeable will be 15 times the nett profits arising from the same during the year next before the date of presenting the plaint. This view ignores the obvious difference in value between lands comprised in permanently-settled estates and temporarily-settled estates, permanent tenures and tenures held for a fixed period of time, holdings of occupancy *raiyats* and those of non-occupancy and under-*raiyats* and so on. It seems to be far more equitable to assess different kinds of lands according to their market-value.

I have several other points of difference with the majority view, which will be clear from the amendments I intend to move when the Bill comes up for consideration.

Minute of dissent by Mr. H. S. Suhrawardy, M.L.C.

I see no reason why in clause 7 (*3*) the fees should not be payable on the market-value and market-value only. In subsequent clauses the fees are made payable on market-value only; and it cannot possibly be within the contemplation of any Legislature to discriminate for no apparent reason. It may be useful, however, to lay down that ordinarily 15 times the nett profits may be considered as the market-value, as a guide to the assessing court, but the only criterion for assessment should be the market-value, and not 15 times the nett profits in one case, and " the market-value " in precisely a similar one.

THE COURT-FEES (BENGAL AMENDMENT) BILL, [*1933*] 1935.

(*Embodying amendments recommended by the Select Committee.*)

[NOTE.—All matter omitted by the Select Committee has been printed in italics and enclosed in square brackets and all new matter inserted has been underlined.]

A

BILL

further to amend the Court-fees Act, 1870.

WHEREAS it is expedient to revise the law relating to Court-fees in Bengal by amendment of the Court-fees Act, 1870, in its application to Bengal, in the manner hereinafter appearing ; VII of 1870.

AND WHEREAS the previous sanction of the Governor-General has been obtained under sub-section (*3*) of section 80A of the Government of India Act to the passing of this Act ; 5 & 6 Geo V, c. 61 ; 6 & 7 Geo. V, c. 37 ; 9 & 10 Geo. V, c 101.

It is hereby enacted as follows :—

Short title, extent and commencement.

1. (*1*) This Act may be called the Court-fees (Bengal Amendment) Act, [*1933*] 1935.

(*2*) It extends to the whole of Bengal.

(*3*) It shall come into force in whole or in part on such date as the Local Government may by notification in the *Calcutta Gazette* appoint and for this purpose different dates may be appointed for different provisions of this Act.

Application of Act.

2. The Court-fees Act, 1870, hereinafter referred to as the said Act, shall, in its application to Bengal, be amended in the manner hereinafter provided.

Amendment of section 2 of Act VII of 1870.

3. For section 2 of the said Act, the following section shall be substituted, namely :—

Definitions.

"2. In this Act, unless there is anything repugnant in the subject or context,—

(*1*) 'appeal' includes a cross-objection ;

(*2*) 'Chief Controlling Revenue-authority' means the Board of Revenue ;

(*3*) 'Collector' includes any officer not below the rank of sub-deputy collector appointed by the Collector to perform the functions of a Collector under this Act ;

(*4*) 'suit' includes an appeal from a decree except in section[*s*] 8A." [*and 8B, in paragraphs v, vi and vii of section 19 and in article 2 of the first schedule to this Act annexed.*]

Amendment of heading of Chapter II.

4. In Chapter II of the said Act, for the heading " Fees in the High Courts and in the Courts of Small Causes at the Presidency towns," the heading " Fees payable in Courts and in Public Offices " shall be substituted.

Amendment of heading of Chapter III.

5. In Chapter III of the said Act, for the heading " Fees in other Courts and in Public Offices," the heading " Computation of fees " shall be substituted.

The Court-fees (Bengal Amendment) Bill, 1935.

(Clauses 6, 7.)

Amendment of section 6.

6. (1) Section 6 of the said Act shall be transferred from Chapter III and inserted after section 5 in Chapter II and [*to*] section 6 as thus transferred [*the following proviso shall be added, namely* :—] shall be re-numbered as sub-section (*1*) of section 6 and in that section as so re-numbered for the words "be paid" the words "has been paid" shall be substituted.

(*2*) To the said section as so re-numbered and amended the following sub-section shall be added, namely :—

"(*2*) Notwithstanding anything contained in sub-section (*1*) or in any other Act, a Court may receive a plaint or memorandum of appeal in respect of which an insufficient fee has been paid, subject to the following conditions, namely :—

(*a*) no such plaint or memorandum of appeal shall be registered unless the plaintiff or appellant has, before such date as the Court may have fixed in this behalf paid to the Court such reasonable sum on account of court-fee as the Court may direct ;

(*b*) the Court shall reject the plaint or memorandum of appeal if the sum referred to in clause (*a*) is not paid before the date fixed by the Court."

[" *Provided that nothing in the section shall prevent the registration of a plaint or memorandum of appeal on its presentation in a Court, subject to the power of the Court to reject such plaint or memorandum of appeal if the proper fee in respect thereof is not paid within such time as may be allowed by the Court in this behalf.*"]

Amendment of section 7.

7. In section 7 of the said Act,—

(*1*) clause (*b*) of paragraph iv shall be omitted ;

(*2*) in paragraph iv after the words "memorandum of appeal" the following words, figure and letter shall be inserted, namely :—

"subject to the provisions of section 8E ;"

[*Provided that*—

(*1*) *the fee payable on the plaint or memorandum of appeal shall not be less than twenty rupees except in the case of a suit mentioned in paragraph vi-B* ;

(*2*) *in cases coming under clause* (*c*), *where the relief sought is with reference to any immovable property, the amount at which such relief is valued shall not be less than half the market value of the immovable property.*"]

(*3*) for paragraph v the following paragraph shall be substituted, namely :—

["*v. In suits for the possession of land, buildings or gardens—according to the market-value of the land, building or garden.*"]

"v. In suits for the possession of land, buildings or gardens—

(*a*) fifteen times the nett profits which have arisen from the land, building or garden during the year next before the date of presenting the plaint, or if the Court sees

The Court-fees (Bengal Amendment) Bill, 1935.

(Clause 7.)

reason to think that such profits have been wrongly estimated, fifteen times such amount as the Court may assess as such profits ;

(*b*) if, in the opinion of the Court, such profits are not readily ascertainable or assessable, or where there are no such profits, according to the market-value of the land, building or garden.

Explanation.—In this paragraph "building" includes a house, out-house, stable, privy, urinal, shed, hut, wall and any other such structure, whether of masonry, bricks, wood, mud, metal or any other material whatsoever ;"

(*4*) for paragraph vi the following paragraph shall be substituted, namely :—

"vi. In suits to enforce a right of pre-emption—according to the market-value of the land, building or garden in respect of which the right is claimed.

Explanation.—In this paragraph 'building' has the same meaning as in paragraph v ;"

(*5*) after paragraph vi the following paragraph[*s*] shall be inserted, namely :—

"viA. In suits for partition and separate possession of a share of joint family property or of joint property, or to enforce a right to a share in any property on the ground that it is joint family property or joint property—

[(*a*) *if the plaintiff is in possession of the property of which he claims to be a co-parcener or co-owner—according to half the market-value of the share in respect of which the suit is instituted* ;]

[(*b*)] if the plaintiff [*is not in*] has been excluded from possession of the property of which he claims to be a co-parcener or co-owner, according to the whole market-value of the share in respect of which the suit is instituted :"

[*Provided that the fee payable on the plaint or memorandum of appeal shall in no case be less than fifteen rupees.*]

[*viB. In a suit to set aside a decree for money or other property having a market-value or to cancel any document securing money or other property having such value or for an injunction restraining the execution of a decree for money or other property having such value—according to the amount*

The Court-fees (Bengal Amendment) Bill, 1935.

(Clauses 8, 9.)

of the decree or to the amount so secured or to the market-value of the property, as the case may be ; or where the setting aside, cancellation or injunction is sought in respect of part only of the money or other property—according to the amount or market-value of that part."]

[*Insertion of new sections 7A and 7B.*]

[**8.** *After section 7 of the said Act, the following sections shall be inserted, namely :—*

[*Calculation of market-value in certain cases.*]

"7A. The market-value referred to in section 7, paragraphs iv, v, vi, viA and viB shall be calculated in accordance with rules to be made by the Local Government in this behalf.

[*Fee on application for reference under section 18 of the Land Acquisition Act, 1894.*]

7B. The amount of fee payable under this Act on an application for reference to the Court under section 18 of the Land Acquisition Act, 1894, shall be computed according to one-third of the difference between the amount awarded by the Collector to the applicant and the amount which should have been awarded to the applicant if the claim made in the application had been upheld by the Collector ; or according to one-third of the last mentioned amount, if no award has been made to the applicant."] *I of 1894.*

Insertion of new sections 8A to 8K.

9. After section 8 of the said Act, the following sections shall be inserted, namely :—

Statement of particulars of subject-matter of suits and plaintiffs' valuation thereof.

8A. In every suit in which an *ad valorem* court-fee is payable under this Act on the plaint, the plaintiff shall file with the plaint a statement of particulars of the subject-matter of the suit and his own valuation thereof unless such particulars and the valuation are contained in the plaint. The statement shall be in such form and shall contain such particulars as may be prescribed by the Local Government by notification in the *Calcutta Gazette*. In every such suit the plaintiff shall also, if the Court so directs, file a duplicate copy of the plaint and of the said statement.

Procedure where insufficient court-fee is filed on plaint or memorandum of appeal.

8B. (*1*) In every suit in which a court-fee is payable under this Act on the plaint or memorandum of appeal the Court shall, as soon as may be after the registration of the plaint or memorandum of appeal, and in every case before proceeding to deliver judgment, record a finding whether a sufficient court-fee has been paid.

(*2*) If the Court records a finding that an insufficient court-fee has been paid on the plaint or memorandum of appeal the Court shall—

(*a*) stay all further proceedings in the suit until it has determined the proper amount of such court-fee payable and the plaintiff or the appellant, as the case may be, has paid such amount or until the date referred to in clause (*b*), as the case may be :

Provided that if the plaintiff or appellant gives security, to the satisfaction of the Court, for the payment of any additional amount for which he may be found liable the Court may proceed with the suit,

(*b*) fix a date before which the plaintiff or appellant shall pay the amount of court-fee due from him, as determined by the Court under clause (*a*).

The Court-fees (Bengal Amendment) Bill, 1935.

(Clause 9.)

(3) If the plaintiff or appellant fails to pay the amount referred to in clause (*b*) before the date fixed by the Court, the suit shall be dismissed.

[*Statement of particulars of subject-matter of suits and plaintiffs' valuation thereof.*]

["*8A. In every suit in which an* ad valorem *court-fee is payable under this Act on the plaint, the plaintiff shall file with the plaint a statement of particulars of the subject-matter of the suit and his own valuation thereof. The statement shall be in such form and shall contain such particulars as may be prescribed by rules made by the Local Government. In every such suit the plaintiff shall also, if the Court so directs, file a duplicate copy of the plaint and of the said statement.*

[*Finding of Court as to correctness of valuation before passing decree.*]

8B. No Court shall pass a decree in any suit in which an ad valorem *fee is payable under this Act on the plaint unless it has recorded a finding that the subject-matter of the suit has been correctly valued and that the proper court-fee has been paid on the plaint.*

[*Stay of proceedings in suits until payment of proper court-fee.*]

8C. If at any stage before the final disposal of a suit the Court is of opinion that an insufficient court-fee has been paid on the plaint or memorandum of appeal the Court shall stay all further proceedings in the suit until it has determined the proper amount of such court-fee payable and, subject to the provisions of section 8D, until the plaintiff or the appellant, as the case may be, has paid such amount :

Provided that if the plaintiff or appellant gives security to the satisfaction of the Court, for the payment of any additional amount for which he may be found liable th Court may proceed with the hearing of the suit.

[*Recovery of insufficient court-fee.*]

8D. If at any time before, or within two years after, the final disposal of a suit it is found by the Court that any court-fee payable in the suit has not been paid, or that an insufficient court-fee has been paid, the Court shall order the person responsible for the payment of the fee to pay the amount of the fee or the amount by which the fee paid was insufficient, as the case may be, within such time as the Court may fix. If such amount is not paid within the time so fixed the Court may, notwithstanding anything contained in any other Act, dismiss the suit if the said person is the plaintiff or the appellant and the suit has not been finally disposed of, and, in any other case, may recover the amount as a public demand.]

Inquiry as to valuation of suits.

8E. [(*1*)] If the Court is of opinion that the subject-matter of any suit has been wrongly valued it may revise the valuation and determine the correct valuation and may hold such inquiry as it thinks fit for such purpose.

[(*a*) *hold such summary inquiry as it thinks fit for the purpose of revising the valuation and determining the correct valuation ;*

(*b*) *if it appears to the Court that the value of the subject-matter of the suit exceeds two thousand rupees, refer the case to the Collector for inquiry.*]

[(*2*) *If the Court is of opinion that the subject-matter of the suit has been undervalued it may, before undertaking an inquiry under sub-section* (*1*), *direct the party responsible for the apparent undervaluation to deposit such sum as the Court thinks reasonable as the costs of the inquiry, and if the costs are not deposited within such time as the Court shall fix, may, notwithstanding anything contained in any other Act, dismiss the suit if such party is the plaintiff or the appellant and, in any other case, may recover the costs as a public demand.*]

[(*3*) *If, after any inquiry under sub-section* (*1*) *the Court finds that the subject-matter of the suit has been wrongly valued, it shall revise the valuation accordingly.*]

The Court-fees (Bengal Amendment) Bill, 1935.

(Clause 9.)

Investigation to ascertain proper valuation.

8F. (1) For the purpose of an inquiry under [*clause (a) of sub-section (1) of*] section 8E the Court may depute, or issue a commission to, any suitable person to make such local or other investigation as may be necessary and to report thereon to the Court. Such report and any evidence recorded by such person shall be evidence in the inquiry.

(2) The Court may, from time to time, direct such party to the suit as it thinks fit to deposit such sum as the Court thinks reasonable as the costs of the inquiry, and if the costs are not deposited within such time as the Court shall fix, may, notwithstanding anything contained in any other Act, dismiss the suit if such party is the plaintiff or the appellant and, in any other case, may recover the costs as a public demand.

[*Power to Collector to make inquiry as to correctness of valuation.*]

[*8G. (1) For the purpose of an inquiry under clause (b) of sub-section (1) of section 8E the Court shall send a copy of the plaint and of the statement of particulars of the subject-matter of the suit and valuation referred to in section 8A to the Collector of the district in which the property which is the subject-matter of the suit is situated, or, if the property is situated in more than one district, to the Collector of the district in which, in the opinion of the Court the most valuable portion of the porperty is situated.*

(2) The Collector shall thereupon make such inquiry as he thinks fit as to the correctness of the valuation or, where a part only, of the property is situated in his district, of the valuation of that part, and may require the Collector of any other district in which any part of the property is situated, to furnish him with a correct valuation thereof, and such latter officer shall furnish such valuation after making such inquiry as he thinks fit.

(3) The Collector, after completing the inquiry made by him and after receipt of any valuation which he may have required from any other Collector, shall record his decision as to the correct valuation of the subject-matter of the suit with the reasons for his decision and shall send a report containing his decision and the reasons therefor to the Court.

(4) In the case of an error apparent on the face of the record the Court may allow the Collector to correct his decision but such correction shall not have the effect of extending the period of limitation mentioned in sub-section (5).

(5) The Collector shall also cause a copy of his report to be served on the plaintiff in such manner as the Local Government may by rule prescribe. If the plaintiff is dissatisfied with the valuation made by the Collector he may, within thirty days of the date of service of the report, make an application to the Court for the revision of the Collector's decision.

(6) When an application is filed under sub-section (5), the Court shall give notice thereof to the Collector and shall call for the record of the Collector's inquiry. After examining the record and taking such additional evidence, if any, as it thinks fit, the Court may confirm or may enhance or reduce the amount of the valuation determined by the Collector. The Collector shall be deemed to be a party to any proceedings under this sub-section.

(7) After the disposal of any application filed under sub-section (5) the Court shall record a finding as to the correct valuation of the subject-matter of the suit. Where no application is made under the said sub-section the Court shall record a finding in accordance with the decision of the Collector received under sub-section (3).]

Power of persons making inquiry under sections 8E, and 8F. [*and 8G.*]

8H. (1) The Court, when making an inquiry under section 8E [*or under sub-section (6) of section 8G, the Collector, when making an inquiry under section 8G*] and any person making an investigation under section 8F shall have, respectively, for the purposes of such inquiry or investigation,

The Court-fees (Bengal Amendment) Bill, 1935.

(Clauses 10, 11.)

the powers vested in a Court under the Code of Civil Procedure, 1908, in respect of the following matters, namely :— Act V of 1908.

(*a*) enforcing the attendance of any person and examining him on oath or affirmation ;

(*b*) compelling the production of documents or material objects ; and

(*c*) issuing commissions for the examination of witnesses.

(*2*) An inquiry or investigation referred to in sub-section (*1*) shall be deemed to be a judicial proceeding within the meaning of sections 193 and 228 of the Indian Penal Code. Act XLV of 1860.

Costs of inquiry as to valuation and refund of excess fee.

8-I. [(*1*)] If in the result of an inquiry under section 8E the Court finds that the subject-matter of the suit has been undervalued the Court may order the party responsible for the undervaluation to pay all or any part of the costs of the inquiry. [*and of any proceeding under sub-section (6) of section 8G arising out of such inquiry.*]

If in the result of such inquiry the Court finds that the subject-matter of the suit has not been undervalued the Court may, in its discretion, order that all or any part of such costs shall be paid by Government or by any party to the suit at whose instance the inquiry has been undertaken, and if any amount exceeding the proper amount of fee has been paid may refund the excess amount so paid.

[(*2*) *If any party who is ordered to pay any amount as costs under sub-section (1) fails to pay such amount within such time as the Court may fix, the amount shall be recoverable as a public demand and, if such party is the plaintiff or the appellant the suit, notwithstanding anything contained in any other Act, shall be dismissed.*]

[*Stamp Reporters.*]

[*8J. Notwithstanding any other provision of this Act the Local Government may from time to time appoint such persons as it thinks fit to be Stamp Reporters, and such Stamp Reporters shall, in accordance with such rules as the Local Government may make in this behalf, report to the Courts regarding the proper fees payable under this Act.*]

[*Maps, charts, etc., issued for estimation of the value of immovable property.*]

[*8K. The Local Government may from time to time provide by rules for the issue of maps, charts and statements for the guidance of Courts, Collectors and all other persons in estimating the value of any immovable property under the provisions of this Act. Such maps, charts and statements shall be evidence in any inquiry or proceeding under this Act relating to the valuation of any such property.*"]

Repeal of sections 9 and 10.

10. Sections 9 and 10 of the said Act are hereby repealed.

Substitution of new section 11.

11. For section 11 of the said Act, the following section shall be substituted, namely :—

Procedure in suits for mesne profits or accounts when amount found due exceeds amount claimed.

"11. [(*1*)] Where, in any suit for mesne profits or for land and mesne profits or for an account, the fee which would have been payable if the suit had comprised the whole of the relief to which the Court finds the plaintiff to be entitled exceeds the fee actually paid, the Court shall require the plaintiff to pay an additional fee equal to the amount of the excess, and if such additional fee is not paid within such time as the Court may fix, the suit, or if a decree has previously been passed therein, so much of the claim as has not been so decreed, shall be dismissed :

Provided that, where the additional fee is payable in respect of a portion of the claim which can be relinquished, that portion only shall be dismissed."

The Court-fees (Bengal Amendment) Bill, 1935.

(Clauses 12—14.)

[(2) *Notwithstanding anything contained in the Code of Civil Procedure, 1908, no appeal shall lie from an order of dismissal under sub-section (1), and such dismissal shall preclude the plaintiff from presenting a fresh plaint in respect of the same cause of action.*"] *Act V of 1908.*

Amendment of section 12.

12. In paragraph ii of section 12 of the said Act, for the words and figures " and the provisions of section 10, paragraph ii, shall apply " the following shall be substituted, namely :— [" *section 10, paragraph ii* "*the words, figures and letters* " *section 8-C and 8-D* " *shall be substituted, and after the said paragraph the following explanation shall be added, namely*]—

" and thereafter :—

(*a*) if the party required to pay is the appellant or petitioner, the provisions of sub-sections (*2*) and (*3*) of section 8B shall, so far as may be, apply ;

(*b*) if the party required to pay is the respondent or the opposite party, the provisions of sub-section (*2*) of section 8B shall, so far as may be, apply, and, if such party fails to pay the fee required before the date fixed by the Court, the Court shall recover the amount of such fee from him as a public demand.

Explanation.—For the purposes of this section a question relating to the classification of any suit for the purpose of section 7 shall not be deemed to be a question relating to valuation."

Substitution of new section 17.

13. For section 17 of the said Act, the following section shall be substituted, namely :—

Multifarious suits.

"17. (*1*) In any suit in which two or more separate and distinct causes of action are joined and separate and distinct reliefs are sought in respect of each, the plaint or memorandum of appeal shall be chargeable with the aggregate amount of the fees with which the plaints or memoranda of appeal would be chargeable under this Act in separate suits instituted in respect of each such cause of action :

Provided that nothing in this sub-section shall be deemed to affect any power conferred by or under the Code of Civil Procedure, 1908, to order separate trials. *Act V of 1908.*

(*2*) Where more reliefs than one based on the same cause of action are sought either jointly or in the alternative, the fee shall be paid according to the value of the relief in respect of which the largest fee is payable."

Amendment of section 19.

14 In section 19 of the said Act,—

(*a*) in paragraph i after the words " Power-of-attorney " the words " or other written authority " shall be inserted ;

[(*b*) *in paragraph xxii after the word " purposes " the words " other than applications in respect of which a fee is payable under section 7B " shall be added ; and*]

(*c*) after paragraph xxiv the following paragraph shall be added, namely :—

" xxv. Petitions of appeal by Government servants or servants of a Court of Wards against orders of dismissal, reduction or suspension ; copies of such orders filed with such appeals, and applications for obtaining such copies."

The Court-fees (Bengal Amendment) Bill, 1935.

(Clauses 15—18.)

New section 34A.

15. After section 34 of the said Act, the following section shall be inserted, namely :—

Enlargement of time.

"34A. Where any period is fixed or granted by the Court for the doing of any act prescribed or allowed by this Act, the Court may, in its discretion, from time to time, enlarge such period, even though the period originally fixed or granted may have expired." [Act V of 1908, s. 148.]

Substitution of new section 35.

16. For section 35 of the said Act, the following section shall be substituted, namely :—

Power to suspend, reduce or remit fees.

" 35. (*1*) The Local Government may from time to time subject to such conditions or restrictions as it may think fit to impose, by notification in the *Calcutta Gazette*, suspend the payment of or reduce or remit, in the whole of Bengal or in any part thereof, all or any of the fees mentioned in the first and second schedules to this Act annexed and may in like manner cancel or vary such order.

(*2*) The Local Government may from time to time by rules prescribe the manner in which any fee the payment of which is suspended under sub-section (*1*) may be realised and for this purpose direct that such fee may be recovered as a public demand."

[*Insertion of new section 35A.*]

[**17.** *After section 35 of the said Act, the following section shall be inserted, namely :—*

[*Power to make rules.*]

" *35A. The Local Government may from time to time, make rules to carry out the purposes of this Act.*

(*2*) *In particular and without prejudice to the generality of the foregoing power such rules may—*

(*a*) *prescribe the method of calculating the market-value referred to in section 7, paragraphs iv, v, viA and viB ;*

(*b*) *prescribe the form of, and the particulars to be contained in, a statement filed under section 8A ;*

(*c*) *prescribe the manner in which a report of the Collector is to be served on the plaintiff under sub-section (5) of section 8G ;*

(*d*) *regulate the functions of Stamp Reporters appointed under section 8J ; and*

(*e*) *provide for the issue of the maps, charts and statements referred to in section 8K.*

(*2*) *All rules made under this section shall be published in the Calcutta Gazette, and shall thereupon have the force of law.*"]

[*Amendment of Schedule I.*]

[**18.** *In Schedule I to the said Act,—*

(*1*) *after Article 2 the following article shall be inserted, namely :—*

" *2A. Application for reference to the Court under section 18 of the Land Acquisition Act, 1894.*	*a fee of the amount prescribed in the scale in Article 1.*"]

1 of 1894.

(*2*) *for Article 12 the following article shall be substituted, namely :—*

[*12. Certificate under the Indian Succession Act, 1925 (XXXIX of 1925.)*

["*When the amount or value of any debt or security specified in the certificate under section 374 of the Act exceeds one thousand rupees,*	*Two* per centum *on the first ten thousand rupees,*
	three per centum *on the next forty thousand rupees,*
	four per centum *on the next fifty thousand rupees, and*
and	*five* per centum *on the remainder of such amount or value.*
when the aggregate amount or value of any debts or securities	*In respect of such portion of the aggregate amount or*

The Court-fees (Bengal Amendment) Bill, 1935.

(Clause 19.)

specified in the certificate and of any debts or securities to which the certificate has been extended under section 376 of the Act exceeds one thousand rupees,]

value as consists of the amount or value of debts or securities so specified, the fee hereinbefore provided in that behalf in this article,

and

three per centum *on such portion of the first ten thousand rupees, four and a half* per centum *on such portion of the next forty thousand rupees, six* per centum *on such portion of the next fifty thousand rupees, and seven and a half* per centum *on such portion of the remainder of such aggregate amount or value, as consists of the amount or value of debts or securities to which the certificate has been extended.*

Note.—(1) The amount of a debt is its amount, including interest on the day on which the inclusion of the debt in the certificate is applied for, so far as such amount can be ascertained.

(2) Whether or not any power with respect to a security specified in a certificate has been conferred under the Act and where such a power has been so conferred, whether the power is for the receiving of interest or dividends on, or for the negotiation or transfer of the security, or for both purposes, the value of the security is its market-value on the day on which the inclusion of the security in the certificate is applied for, so far as such value can be ascertained."]

Amendment of Schedule II.

19. In Schedule II to the said Act—

(*a1*) in Article 17 after entry v, the following entry shall be inserted, namely :—

"(va) for partition and separate possession of a share of joint family property or of joint property, or to enforce a right to a share in any property on the ground that it is joint family property or joint property if the plaintiff is in possession of the property of which he claims to be a coparcener or co-owner.	.. Fifteen rupees."

(*1*) after Article 18 the following article shall be inserted, namely :—

" 18A. Application under paragraph 20 of the Second Schedule to the Civil Procedure Code, 1908, to file an arbitration award, and memorandum of appeal from a decree passed under paragraph 21 of the said Schedule " ;	.. Fifteen rupees.

Act V of 1908.

The Court-fees (Bengal Amendment) Bill, 1935.

(Clause 20.)

(2) After Article 21 the following Article shall be inserted, namely :—

"22. Petition.	(*a*) questioning the election of any person as a Municipal Commissioner, when presented to a District Judge under section 36 of the Bengal Municipal Act, 1932 ;	[*One hundred*] .. Fifteen rupees."	Ben. Act XV of 1932.
	(*b*) questioning the election of any person as a member of a District Board or Local Board, when presented to any authority appointed under clause (*a*) of section 138 of the Bengal Local Self-Government Act of 1885 to decide disputes relating to such elections.		Ben. Act III of 1885.

[*Exemption of certain certificates.*]

[**20.** *Nothing in this Act shall apply to any certificate under the Indian Succession Act, 1925, in respect of which the fee payable under the law for the time being in force has been paid before the commencement of this Act, but which has not issued.*] [*Cf. Ben. Act IV of 1922, s. 17.*] *XXXIX of 1925.*

J. W. McKAY,
Secy. to the Bengal Legis. Council.

BENGAL LEGISLATIVE COUNCIL DEPARTMENT.

NOTIFICATION.

No. 1147L.C.—26th February, 1935.—The following report of the Select Committee on the Albert Victor Leper Hospital Bill, 1935, with the Bill embodying amendments recommended by the Committee, is hereby published for general information.

Report of the Select Committee on the Albert Victor Leper Hospital Bill, 1934.

We, the members of the Select Committee of the Bengal Legislative Council to which the Albert Victor Leper Hospital Bill, 1934, was referred by a motion carried in the Bengal Legislative Council on the 18th February, 1935, have the honour to submit this our report with the Bill embodying amendments recommended by us annexed. All matter recommended to be omitted by the Select Committee has been printed in italics and enclosed in square brackets and all new matter recommended to be inserted has been underlined.

2. The Bill was published in English in the *Calcutta Gazette* of the 6th December, 1934.

3. We do not consider that the Bill has been so altered as to require republication.

4. The Committee met for the first time on the 21st February, 1935, and concluded its sittings on the 22nd February, 1935.

The more important changes made in the Bill are as follow:—

Clause 1.—We have altered the year of the Bill from "1934" to "1935."

Clause 4.—The change recommended in clause 4 (*1*) (*d*) is to guard against the contingency that might arise from the possible change in the jurisdiction of Public Works Divisions in Calcutta.

(*2*) We think it better to leave the method of the election of the two trustees contemplated in clause 4 (*1*) (*f*) to the Corporation of Calcutta.

(*3*) The change proposed in clause 4 (*1*) (*g*) is mainly verbal.

(*4*) We do not see the necessity of qualifying the associations referred to in clause 4 (*1*) (*h*) by the use of the word "voluntary" and have recommended the omission of this word.

(*5*) The emendation proposed by us in clause 4 (*3*) is merely verbal.

(*6*) We think it desirable that the term of office of elected and appointed members should be five years instead of three years as in clause 4 (*4*) of the Bill as introduced and we have amended the clause accordingly.

(*7*) The change suggested in clause 4 (*5*) is merely verbal.

Clause 7.—We have altered clause 7 on the lines of clause 8 enabling the Government contribution to be increased, if Government thinks fit.

Clause 17.—The proposed deletion of clause 17 (*2*) (*a*) is consequential on the alteration made in clause 4 (*1*) (*f*).

(*2*) We do not think that any allowances should be payable to the Trustees and have deleted clause 17 (*2*) (*c*) accordingly.

(*3*) We have included in 17(*2*) (*e*) the rule-making powers provision for preparation of an annual report as well as maintenance of a record of proceedings, and for submission of copies to the Corporation of Calcutta as well as to Government.

(*4*) We do not think that the Superintendent should be allowed to enter into any contracts and have omitted him from clause 17 (*2*) (*f*).

(*5*) The emendation proposed in clause 21 is verbal.

The Schedule, Part III.—We are informed that the changes now made are necessary on the ground of greater accuracy.

We recommend that the Bill, in the form as reported on by us, be passed.

B. P. SINGH ROY,
Member in charge.

G. S. DUTT.

C. W. GURNER.

D. P. GOIL.

D. J. COHEN.

H. S. SUHRAWARDY.

AMULYADHAN RAY.

A. RAHEEM.

R. R. KHAN.

N. C. SEN GUPTA.

*S. M. BOSE

*S. C. MITTRA.

*HARIDHAN DUTT.

MD. SAADATULLAH.

*C. G. COOPER.

J. W. McKAY,
Secretary to the Bengal Legislative Council.

*Signed subject to his minute of dissent annexed.

N. B.—The signature of Babu Haribansa Roy had not been received up to the time of publishing the Report.

Minute of dissent by Mr. S. M. Bose, M.L.C.

I sign the Report of the Select Committee subject to this minute of dissent.

Clause 9.—There is no reason why the sum of Rs. 5,000 should be earmarked for repairs to the buildings *existing at the date of the commencement of this Act.* It is said that unless these words stand, the Trustees will spend the whole of this sum for repairs, etc., to new buildings, neglecting the old. It is to be noted that twelve out of the fifteen Trustees under clause 4 of the Bill are *ex officio* Government servants or nominated by Government. It is surely not too much to expect that the Board so constituted will perform its duties properly, and I see no reason why Government should not trust them.

Further, I understand that a good portion of the buildings now existing are old and are likely to be pulled down and new ones erected. In course of time, the existing buildings are all likely to be replaced by new ones. So it will not be possible to spend the whole of this sum of Rs. 5,000 in repairs of the buildings "existing at the date of the commencement of this Act."

I therefore think that these words should be omitted.

Minute of dissent by Babu Sarat Chandra Mittra, M.L.C.

Clause 9.—The Government having agreed to a grant not exceeding rupees five thousand per annum for repairs, I think that it will not be fair and equitable to restrict the application of the grant to repairs to the buildings in existence at the commencement of the Act.

Minutes of dissent by Rai Bahadur Dr. Haridhan Dutt, M.L.C., and Mr. C. C. Cooper, M.L.C.

Clause 9.—I sign subject to my right to move for the omission of the words "existing at the date of the commencement of this Act" from lines 4-5 of clause 9.

THE ALBERT VICTOR LEPER HOSPITAL BILL, [*1934.*]
1935.

CONTENTS.

Clause.

1 Short title and commencement.
2 Definitions.
3 Incorporation of Trustees.
4 Constitution of the Board.
5 Property to vest in the Board.
6 Hospital Fund.
7 Contribution by Local Government.
8 Contribution by Corporation of Calcutta.
9 Repairs to the Hospital.
10 Acquisition of land.
11 Superintendent and establishment.
12 Contributions for pensions, etc.
13 Trustees, officers and servants to be public servants.
14 Returns.
15 Control and supersession of the Board.
16 Dissolution of the Board.
17 Power of Local Government to make rules.
18 Power of the Board to make regulations.
19 Rules to be made after previous publication.
20 Notice of suits against the Board, etc.
21 Validation.
22 Classification of Hospital.

THE SCHEDULE.

THE ALBERT VICTOR LEPER HOSPITAL BILL, [*1934.*] 1935.

(Embodying amendments recommended by the Select Committee.)

[NOTE.—All matter omitted by the Select Committee has been printed in italics and enclosed in square brackets and all new matter inserted has been underlined.]

A

BILL

to provide for the incorporation of Trustees for the Albert Victor Leper Hospital at Gobra in Calcutta and to make provision for other matters in relation thereto.

WHEREAS early in the nineteenth century an asylum was established for the accommodation and medical treatment of lepers ;

AND WHEREAS the said leper asylum after various vicissitudes is now known as the Albert Victor Leper Hospital and is situated at Gobra in Calcutta ;

AND WHEREAS the Hospital is at present a State hospital conducted departmentally by the Government of Bengal, and is under the supervision of a Board of Management, with the Commissioner of the Presidency Division as Chairman, subject to the general control of the Surgeon-General to the Government of Bengal, and is financed through the budget of the Medical Department of that Government;

AND WHEREAS the site of the Hospital was purchased and buildings were constructed thereon partly from funds provided by the public and partly from funds provided by the Government of Bengal ;

AND WHEREAS the premises comprising the main building of the Hospital together with certain funds (such premises and funds being set forth in Part I of the Schedule) are vested in the Treasurer of Charitable Endowments for Bengal under the provisions of the Charitable Endowments Act, 1890, for the purposes of the Hospital and certain additional premises and funds (set forth in Part II of the Schedule) are held by the Local Government for the purposes of the Hospital, and certain other funds and property (set forth in Part III of the Schedule) are held by the Official Trustee of Bengal and the Administrator-General of Bengal in trust for certain purposes of the Hospital ; VI of 1890.

AND WHEREAS it is expedient to provide for the incorporation of Trustees for the Albert Victor Leper Hospital and to cause the Hospital including its properties and funds to be or become vested in the said Trustees together with power to receive the income and benefit of trusts created for the benefit of the said Hospital and to make provision for other matters in relation to the said Hospital ;

AND WHEREAS in pursuance of the provisions of the Charitable Endowments Act, 1890, for the purpose of transferring the said properties and funds mentioned in Part I of the Schedule from the Treasurer of Charitable Endowments to the said Trustees a direction will be published by the Local Government in the *Calcutta Gazette* under section 10 of the said Act ;

AND WHEREAS the previous sanction of the Governor General under sub-section (*3*) of section 80A of the Government of India Act has been obtained to the passing of this Act ; 5 & 6 Geo. V, c. 61 ; 6 & 7 Geo. V, c. 37 ; 9 & 10 Geo. V, c. 101.

It is hereby enacted as follows :—

Short title and commencement.

1. (*1*) This Act may be called the Albert Victor Leper Hospital Act, [*1934.*] 1935.

(*2*) It shall come into force on such date as the Local Government may, by notification, appoint.

The Albert Victor Leper Hospital Bill, 1935.

(*Clauses 2—4.*)

Definitions.

2. In this Act, unless there is anything repugnant in the subject or context,— [*Cf.* Act XIII of 1922 ; s. 2.]

(*1*) " the Board " means the Board of Trustees for the Albert Victor Leper Hospital constituted under this Act ;

(*2*) " Chairman " means the Chairman of the Board ;

(*3*) " the Hospital " means the Albert Victor Leper Hospital ;

(*4*) " notification " means a notification published in the *Calcutta Gazette* ;

(*5*) " the Superintendent " means the Superintendent of the Hospital appointed by the Board under sub-section (*1*) of section 11 ; and

(*6*) " Trustee " means a member of the Board.

Incorporation of Trustees.

3. Subject to the provisions of this Act, the entire management and control of the Hospital shall, on and from the date on which this Act comes into force, be vested in a Board to be called " the Trustees for the Albert Victor Leper Hospital " and the Board shall be a body corporate having perpetual succession and a common seal, with power to acquire and hold property both movable and immovable and to contract, and shall by the said name sue and be sued. [*Cf.* Act XIII of 1922, s. 3.]

Constitution of the Board.

4. (*1*) The Board shall consist of fifteen Trustees, namely :—

(*a*) the Commissioner of the Presidency Division,
(*b*) the District Magistrate of the 24-Parganas,
(*c*) the Director of Public Health, Bengal,
(*d*) the Executive Engineer of the [*Second*] Calcutta Division in which the Hospital is situated,
(*e*) the Health Officer of the Corporation of Calcutta,
} *ex officio.*

(*f*) two Trustees to be elected [*in the prescribed manner*] by the Corporation of Calcutta from among their Aldermen and Councillors,

(*g*) seven [*other*] Trustees to be appointed by the Local Government, and

(*h*) one representative of the British Empire Leprosy Relief Association, Bengal, or of any other [*voluntary*] association for the treatment and relief of leprosy, to be appointed by the Local Government.

(*2*) The Commissioner of the Presidency Division shall be, *ex officio*, Chairman of the Board and the Superintendent shall be, *ex officio*, Secretary of the Board.

(*3*) If by such date as may be fixed by the Local Government the Corporation of Calcutta [*do not*] fails to elect the Trustees to be elected by them under the provisions of clause (*f*) of sub-section (*1*), the Local Government shall appoint suitable persons to be such Trustees, and the persons so appointed shall be deemed to be Trustees as if they had been duly elected by the Corporation.

(*4*) An elected or appointed Trustee shall, subject to the provisions of this Act, hold office from the date of his election or appointment for a term of [*three*] five years or thereafter until his successor shall have been elected or appointed, and shall be eligible for re-election or re-appointment ; but the Local Government may, at any time, accept the resignation of any such Trustee. [*Cf.* Ben. Act V of 1914 ; s. 11 (*4*).]

(*5*) When the [*place*] office of an elected or appointed Trustee becomes vacant by his removal, resignation or

The Albert Victor Leper Hospital Bill, 1935.

(*Clauses 5, 6.*)

death, a new Trustee shall be elected or appointed in the manner provided in this section and shall hold office so long as the Trustee whose place he fills would have been entitled to hold office if such vacancy had not occurred.

Property to vest in the Board.

5. (*1*) The Board shall upon the date of the making under section 10 of the Charitable Endowments Act, 1890, of a direction of the Local Government for transfer to the Board of the property and funds set forth in Part I of the Schedule from the Treasurer of Charitable Endowments (hereinafter referred to as the date of transfer), receive and take possession of the same and shall thenceforth hold the same for the purposes of the Hospital as provided in this Act : VI of 1890.

Provided that the income of such of the said funds as were created for specific purposes mentioned in Part I of the Schedule shall continue to be applied by the Board for such specific purposes.

(*2*) Upon the date of transfer the property and funds set forth in Part II of the Schedule together with all other property and funds [other than those referred to in sub-section (*1*)] movable or immovable, which upon the date of transfer appertain to the Albert Victor Leper Hospital situated at Gobra in Calcutta or are held by or on behalf of the persons then acting as members of the Board of Management of the said Hospital or by any other person for the purposes of the Hospital or for the benefit of the inmates thereof including the right to receive the benefit of the trust funds (either capital or income as the case may be) set forth in Part III of the Schedule and the right to receive the benefit of any other trust funds (if any) now existing or hereafter to be created in trust for the said Hospital or for the benefit of inmates thereof together also with all equipment, appliances, furniture and accessories belonging to the said Hospital not already transferred under sub-section (*1*) shall vest in the Board and shall thenceforth be held for the purposes of the Hospital as provided in this Act :

Provided that the income of any funds (including those set forth in Parts II and III of the Schedule) which up to the date of transfer have been held in trust for specific purposes in connection with the Hospital shall continue to be applied by the Board for such specific purposes :

Provided also that the Board may in its discretion accept the gift or bequest of any funds given or bequeathed for specific purposes in connection with the said Hospital and apply the same or the income thereof accordingly.

(*3*) All liabilities which at the date of transfer have been incurred for the purposes of the Albert Victor Leper Hospital by the persons then or theretofore acting as members of the Board of Management of the Hospital shall be deemed to be liabilities of the Board and shall be discharged out of the property and funds vested in the Board.

Hospital Fund.

6. (*1*) There shall be formed for the Hospital a fund to which shall be credited— [*Cf.* Ben. Act VII of 1930, s. 37.]

(*i*) the sums [*given*] paid by the Local Government and the Corporation of Calcutta as contributions under sections 7 and 8 ;

(*ii*) all other sums granted by the Local Government or the Corporation of Calcutta for the purposes of the Hospital ;

The Albert Victor Leper Hospital Bill, 1935.

(Clauses 7—11.)

(*iii*) all sums received by the Board from the Commissioners of any municipality or from any district board as contributions towards the cost of treatment in the Hospital of persons resident within such municipality or district;

(*iv*) all sums levied by the Board for the treatment or accommodation of patients other than indigent patients;

(*v*) all income derived from any endowments or other property owned or managed by the Board for purposes in connection with the Hospital; and

(*vi*) all other sums of money received by the Board for the purposes of the Hospital.

(*2*) The Hospital Fund shall become vested in the Board, be under its control and shall be held in trust for the purposes of the Hospital.

Contribution by Local Government.

7. The Local Government shall, for the purposes of the Hospital, contribute annually to the Board a sum of sixty thousand rupees and may contribute such other sums as the Local Government may think fit. [*Cf.* Act XVIII of 1920, s. 47A.]

Contribution by Corporation of Calcutta.

8. Notwithstanding anything contained in the Calcutta Municipal Act, 1923, the Corporation of Calcutta shall, for the purposes of the Hospital, contribute annually to the Board a sum of seven thousand rupees and may contribute such other sums as the Corporation may, from time to time, determine. [New.] Ben. Act III of 1923.

Repairs to the Hospital.

9. The Local Government shall spend annually a sum not exceeding five thousand rupees for the purpose of causing such repairs to be executed to the main and subsidiary buildings of the Hospital existing at the date of the commencement of this Act as, in the opinion of the Local Government, are necessary:

Provided that if in three consecutive years less than fifteen thousand rupees is spent for such repairs, the amount of the deficiency below fifteen thousand rupees shall be available for expenditure in the fourth year in addition to the annual sum provided for that year for carrying out such repairs as in the opinion of the Local Government are necessary:

Provided further that in any three consecutive years no more than fifteen thousand rupees shall be spent on this account.

Acquisition of land.

10. (*1*) The Local Government may, at the request of the Board acquire, under the provisions of the Land Acquisition Act, 1894, any land which, in the opinion of the Local Government is required by the Board for the purposes of the Hospital, and, on payment by the Board of the compensation awarded under that Act and of the charges incurred by the Local Government in connection with the proceedings, the land shall vest in the Board. [*Cf.* Act XIII of 1922, s. 8.] I of 1894.

Superintendent and establishment.

11. (*1*) With the previous sanction of the Local Government, the Board—

(*a*) shall appoint a Superintendent of the Hospital who shall be an officer of the Board, and

(*b*) shall assign to the Superintendent such pay and allowances as the Board thinks fit.

(*2*) Subject to the provisions of this Act and of any rules made thereunder, the Board shall maintain such staff of officers and servants as may in its opinion be necessary for the Hospital, and shall assign to them such pay and allowances as it thinks fit. [*Cf.* Act XIII of 1922, s. 9.]

The Albert Victor Leper Hospital Bill, 1935.

(*Clauses 12—15.*)

Contributions for pensions, etc.

12. Where any person in the service of Government is appointed as an officer or servant of the Board, the Board shall— [*Cf.* Act XIII of 1922, s. 10.]

(*a*) if his services are wholly lent or transferred, meet in addition to his pay and allowances any charges prescribed or authorised by any rules for the time being in force under the provisions of section 96B of the Government of India Act regarding contributions towards pensions or gratuities and leave allowances, and

(*b*) if he is employed partly by Government and partly by the Board, meet such proportion of such pay and allowances and charges as may be determined by the Local Government.

Trustees, officers and servants to be public servants.

13. Every Trustee and every officer and servant of the Board shall be deemed to be a public servant within the meaning of section 21 of the Indian Penal Code. [*Cf.* Act XIII of 1922, s. 11.] Act XLV of 1860.

Returns.

14. The Local Government may call upon the Board to furnish it with any extract from any proceedings of the Board or from any record under the control of the Board, or with any information concerning the administration of the Hospital, and the Board shall thereupon furnish the same without unreasonable delay. [*Cf.* Act XIII of 1922, s. 12.]

Control and supersession of the Board.

15. (*1*) If the Local Government, after such inquiry as it may deem fit, is satisfied— [*Cf.* Act XIII of 1922, s. 13.]

(*a*) that any of the duties imposed or powers conferred upon the Board by or under this Act has not been performed or exercised or has been performed or exercised in an imperfect, inefficient or unsuitable manner; or

(*b*) that adequate financial provision has not been made for the performance of any such duty or for the proper maintenance of the Hospital;

it may, by order in writing, direct the Board, within such period as may be specified in the order, to make arrangements to the satisfaction of the Local Government for the proper performance of such duty or for the proper exercise of such power, or to make financial provision to the satisfaction of the Local Government for the performance of such duty or for the maintenance of the Hospital, as the case may be; and the Board shall thereupon comply with such direction.

(*2*) On the failure of the Board to comply with any such direction, the Local Government or any person appointed by the Local Government in this behalf may perform such duty or exercise such power or make such provision, as the case may be, and the Local Government may attach the Hospital Fund or any portion thereof and may apply the same to meet any charge incurred in the performance of such duty or the exercise of such power, or in the making of such provision, as the case may be.

(*3*) On the repeated failure of the Board to comply with such directions, or if the Board otherwise exceeds or abuses its powers, the Local Government may, by notification, declare the Board to be incompetent or to have exceeded or abused its powers, as the case may be, and direct that the Board shall be superseded for such period as may be specified in the notification.

(*4*) When the Board is superseded under the provisions of sub-section (*3*)—

(*a*) all Trustees shall, from the date of the publication of the notification under that sub-section, vacate their offices as Trustees;

The Albert Victor Leper Hospital Bill, 1935.

(*Clauses 16, 17.*)

(*b*) all powers and duties of the Board shall, during the period of supersession, be exercised and performed by such person or persons as the Local Government may appoint in this behalf ;

(*c*) all funds and other property vested in the Board shall, during the period of supersession, vest in the Local Government on behalf of His Majesty ; and

(*d*) before the expiration of the period of supersession, Trustees shall be elected and appointed in the manner provided in section 4, for the purpose of reconstituting the Board.

Dissolution of the Board.

16. The Local Government may, by notification, declare that, with effect from such date as may be specified in the notification, the Board shall be dissolved, and, on the making of such declaration, all funds and other property vested in the Board shall vest in the Local Government on behalf of His Majesty. [*Cf.* Act XIII of 1922, s. 14.]

Power of Local Government to make rules.

17. (*1*) The Local Government may make rules for carrying out the purposes of this Act. [*Cf.* Act XIII of 1922, ss. 15 and 16.]

(*2*) In particular and without prejudice to the generality of the foregoing power, such rules may provide for all or any of the following matters, namely :—

[(*a*) *prescribing the manner of election of Trustees under clause* (*f*) *of sub-section* (*1*) *of section* (*4*) ;]

(*b*) prescribing the circumstances in which and the authority by which a Trustee elected or appointed under section 4 may be removed ;

[(*c*) *prescribing the allowances, if any, payable to the Trustees from the Hospital Fund on account of attendance at meetings of the Board ;*]

(*d*) fixing the minimum number of meetings of the Board during any year ;

(*e*) requiring the maintenance by the Board or the Managing Committee of the Board of a record of all business transacted, the preparation of an annual report and the submission of copies of such [*record*] documents to the Local Government, the Corporation of Calcutta and [*or*] to any other specified authority ;

(*f*) defining the powers of the Board, the Managing Committee of the Board, and the Chairman [*and the Superintendent,*] respectively to enter into contracts binding on the Board, and the manner in which such contracts shall be executed ;

(*g*) sanctioning works in connection with the Hospital and prescribing the preparation of estimates of such works before work is commenced and the authority by which such estimate shall be sanctioned ;

(*h*) prescribing the procedure to be observed in calling for and considering tenders ;

(*i*) requiring the preparation of schedules of the staff of officers and servants of the Board ;

(*j*) defining the powers of the Board, the Managing Committee of the Board, the Chairman and the Superintendent, respectively, in respect of the appointment, promotion and dismissal of officers and servants of the Board, and in respect of the creation and abolition of appointments of such officers or servants ;

(*k*) regulating the grant of leave to officers and servants of the Board, and the payment of leave

The Albert Victor Leper Hospital Bill, 1935.

(Clause 18.)

allowances to such officers and servants, and the remuneration to be paid to any person appointed to act for any officer or servant to whom leave is granted ;

(*l*) regulating the payment of pensions, gratuities, compassionate allowances and travelling allowances to officers and servants of the Board ;

(*m*) prescribing the establishment and maintenance of a provident fund for the officers and servants of the Board, and the deduction of subscriptions to such provident fund from the pay and allowances of such officers or servants, other than Government servants whose services have been lent or transferred to the Board;

(*n*) prescribing the preparation of budget estimates of the annual receipts and expenditure of the Hospital Fund and of supplementary estimates of expenditure not included in the Budget estimates, and the manner in which such estimates shall be sanctioned and published ;

(*o*) defining the powers of the Board, the Managing Committee of the Board, the Chairman and the Superintendent, respectively, in regard to the expenditure of the Hospital Fund, whether provision has or has not been made in the budget estimates or by re-appropriation for such expenditure, and in regard to the re-appropriation of estimated savings in the budget estimates of expenditure ;

(*p*) prescribing the maintenance of accounts of the receipts and expenditure of the Hospital Fund and providing for the audit of such accounts ;

(*q*) prescribing the manner in which payments are to be made by or on behalf of the Board, and the officers by whom orders for making deposits or investments or for withdrawals or disposal of the Hospital Fund shall be signed ; and

(*r*) determining the custody in which the current account of the Hospital Fund shall be kept, and the bank or banks at which surplus monies at the credit of the Hospital Fund may be deposited at interest, and the conditions on which such monies may be otherwise invested.

Power of the Board to make regulations.

18. Subject to any rules made under section 17, the Board may, with the previous sanction of the Local Government, make regulations to provide for all or any of the following matters, namely :— [*Cf.* Act XIII of 1922, s. 17.]

(*a*) the constitution of a Managing Committee and the delegation thereto of any powers exercisable under this Act by the Board ;

(*b*) prescribing the method of appointment, removal and replacement and the term of office of members of the Managing Committee, and the filling of vacancies therein ;

(*c*) the appointment of the dates, times and places for meetings of the Board and the Managing Committee, and the procedure to be observed at such meetings ;

(*d*) determining the amount and nature of the security, if any, to be demanded from officers or servants of the Board, and the circumstances in which such security may be demanded ;

(*e*) determining the times at which, and the circumstances in which, payments may be made out of

The Albert Victor Leper Hospital Bill, 1935.

(*Clauses 19—22. The Schedule.*)

the provident fund, and the conditions on which such payments shall relieve the fund from further liability ;

(*f*) determining the contribution, if any, payable from the Hospital Fund to the provident fund ;

(*g*) regulating generally all matters incidental to the provident fund and the investment thereof ; and

(*h*) defining the powers and duties of the Secretary of the Board.

Rules to be made after previous publication.

19. All rules made under section 17 shall be made subject to the condition of previous publication, and shall be published in the *Calcutta Gazette*, and on such publication shall have effect as if they were enacted in this Act. [*Cf.* Act XIII of 1922, s. 18.]

Notice of suits against the Board, etc.

20. No suit shall be instituted against the Board or any Trustee or any officer or servant of the Board, or any person acting under the direction of the Board or of the Chairman or of any such officer or servant, in respect of any act purporting to be done under this Act or any rule made hereunder until the expiration of one month after written notice has been delivered or left at the office of the Board or at the office or place of abode of such officer or servant, stating the cause of action, the name and place of abode of the complaintant and the relief which he claims, and unless the plaint contains a statement that such notice has been so delivered or left. [*Cf.* Act XIII of 1922, s. 19.]

Validation.

21. No act done or proceedings taken under this Act shall be questioned on the ground merely of— [*Cf.* Act XIII of 1922, s. 20.]

(*a*) the existence of any vacancy [*in*] or any defect in the constitution of the Board or the Managing Committee ; or

(*b*) any person having ceased to be a Trustee ; or

(*c*) any omission, defect or irregularity not affecting the merits of the case.

Classification of Hospital.

22. For all the purposes of the Lepers Act, 1898, the Hospital shall be deemed to be a Leper Asylum appointed by the Local Government. [*Cf.* Act XIII of 1922, s. 21.] III of 1898.

THE SCHEDULE.

(*See* section 5.)

Part I.

Property and funds held by the Treasurer of Charitable Endowments, Bengal.

Premises Nos. 18, 19, 20 and 21, Gobra Road South in Calcutta (Hospital Main Block), being all that piece or parcel of revenue-free land containing an area of 20 *bighas* 7 *cottahs* 8 *chittacks* more or less situate on the south side of Gobra Road at the corner of Asgar Mistry Lane in the North Division of the Town of Calcutta and bearing Municipal Nos. 18, 19, 20 and 21 and being Holding No. 133 in Subdivision G of Division 4 in Estate Dihi Panchannagram and bounded as follows, namely, on the *north* by Gobra Road, on the *east* partly by Asgar Mistry Lane and partly by premises known as Napier Cottage, No. 1, Asgar Mistry Lane, and partly by premises known as Plot No. 3, Asgar Mistry Lane, on the *south* partly by premises No. 7, Hingar Jamadar Lane, and partly by premises No. 8, Hingar Jamadar Lane, and partly by premises Nos. 6-7, Ram Narohan Bira Lane, and on the *west* by the Eastern Bengal Railway land.

The Albert Victor Leper Hospital Bill, 1935.

(*The Schedule.*)

Together with all buildings, structures and erections standing or being on the said land, which said premises and buildings are commonly known as the Albert Victor Leper Hospital.

And together with all rights, easements and appurtenances whatsoever belonging or attached or appurtenant to the said land, buildings, structures and erections or held or enjoyed therewith.

Together also with all equipments, appliances, furniture and accessories belonging to the said Hospital.

Funds.—(*a*) *The Albert Victor Leper Asylum Maintenance Fund* of Rs. 20,500 (face value) of 3½ per cent. Government Promissory notes, held under Notification No. 575 T.M., dated 29th September, 1898—for general maintenance of the Hospital.

(*b*) *The Tincowri Dassi Fund* of Rs. 29,500 (face value) of 3½ per cent. Government Promissory notes held under Notification No. 2174 Medl., dated 29th August, 1919—the income to be applied in adding to the comforts of the inmates of the said Asylum in matters which are not fit subjects for expenditure from the general revenue thereof or applicable thereto.

(*c*) *The Joy Chandi Dutt Fund* of Rs. 10,000 (face value) of 3½ per cent. Government Promissory notes held under Notification No. 914, dated 26th March, 1923—the income to be applied in the same manner as income of Tincowri Dassi Fund abovementioned.

PART II.

Premises and funds held by or under the control of Government.

Premises No. 32, Gobra Road South in Calcutta (Superintendent's quarters), being all that piece or parcel of revenue-free land containing an area of 5 *bighas* 9 *cottahs* 7 *chittacks* 5 square feet more or less, situate on the south side of Gobra Road South in the North Division of the Town of Calcutta and bearing Municipal No. 32 and being Holding No. 5 in Subdivision G of Division 4 in Estate Dihi Panchannagram and bounded as follows, namely, on the *north* by Gobra Road, and *east* partly by premises No. 31, Gobra Road, and partly by Eastern Bengal Railway land, on the *south* partly by premises, No. 6, Dihi Serampore Road, and partly by Eastern Bengal Railway land and on the *west* partly by premises No. 6, Dihi Serampore Road, and partly by premises No. 5, Dihi Serampore Road.

Together with all buildings, structures and erections standing or being on the said land, which said premises and buildings are known as the Superintendent's quarters.

Together also with all rights, easements and appurtenances whatsoever belonging or attached or appurtenant to the said land, buildings, structures and erections or held and enjoyed therewith. *Premises* No. 32-1, Dihi Serampore Road in Calcutta (Sub-Assistant Surgeon's quarters) being all that piece or parcel of revenue-free land containing an area of 2 *cottahs* more or less situate on the *west* side of Dihi Serampore Road in the North Division of the Town of Calcutta and bearing Municipal No. 32-1 and being part of Holding No. 633 in Subdivision B of Division 4 in Estate Dihi Panchannagram and bounded as follows, namely, on the *north* by premises No. 32, Dihi Serampore Road, on the *east* by Dihi Serampore Road on the *south* by premises No. 31, Dihi Serampore Road, and on the *west* by premises No. 32-2, Dihi Serampore Road.

Together with all buildings, structures and erections standing or being on the said land, which said premises and buildings are known as the Sub-Assistant Surgeon's quarters.

The Albert Victor Leper Hospital Bill, 1935.

(The Schedule.)

Together also with all rights, easements and appurtenances whatsoever belonging or attached or appurtenant to the said land, buildings, structures and erections or held and enjoyed therewith.

Funds.—(1) The D. W. Burnett Fund of Rs. 2,000 (face value) of 3½ per cent. Government Promissory notes, held by the Controller of Currency under orders contained in Bengal Government No. 511 Medl., dated 24th February, 1921, and received from the Official Trustee of Bengal in terms of the Will of D. W. Burnett deceased—the income of which is to be applied in the same manner as income of the Tincowri Dassi Fund abovementioned.

(2) *The Kedar Nath Rajghoria Fund* of Rs. 6,500 (face value) of 3½ per cent. Government Promissory notes held by the Controller of Currency, investments representing a gift by Babu Babulal Rajghoria in memory of his late father Kedar Nath Rajghoria—the income of which is to be applied partly for giving a treat to the patients of the Hospital on the 28th February in each year in memory of the Donor's father, and partly for providing warm clothing to the patients in the winter.

(3) *The George Jones Fund* at present comprising Rs. 11,000 (face value) of 3½ per cent. Government Promissory notes held by the Controller of Currency received from the Administrator-General of Bengal in part distribution of a legacy under the Will of George Jones deceased—the income of which is to be applied for the general purposes of the Hospital.

NOTE.—When the house No. 14, Watkins Lane, Calcutta, is sold by the said Administrator-General one-half of the net proceeds will be added to this Fund. In the meantime half of the net rents of the house are receivable by the Hospital. *See* Part III of this Schedule.

(4) *The Krishna Bhamini Dassi Fund* of Rs. 5,200 (face value) of 3½ per cent. Government Promissory notes, held by the Controller of Currency, received from Babu Hem Chandra Bhose as a gift in memory of his late mother—the income of which is to be applied for the maintenance of an additional bed in the Hospital, to be named after the late Sm. Krishna Bhamini Dassi.

PART III.

Funds and property held in trust for the Hospital.

1. Under the Will of the late *George Jones* abovementioned, two houses were given in trust for sale, the proceeds to be divided equally between this Hospital and another Institution, and one house was sold and the proceeds were divided. The remaining house No. 14 (formerly 19), Watkins Lane, Howrah, is unsold and remains held by the Administrator-General of Bengal until sale, when half of the net proceeds will be receivable by the Hospital. In the meantime half of the net rents thereof are being received by the Hospital.

2. *The William Incell Memorial Fund* of Rs. [*7,500*] 8,000 (face value) of 3½ per cent. Government Promissory notes held by the Official Trustee of Bengal as Trustee of a Trust Deed executed by the late Mrs. Delphine Catherine Incell in memory of her husband, being a one-fifth share of a fund the income of which total fund is divisible among five Religious or Charitable Institutions of which this Hospital is one. The income is to be applied for the benefit of the European and Anglo-Indian destitute patients in the Hospital [*general purposes of the Hospital*].

J. W. McKAY,

Secy. to the Bengal Legis. Council.

Registered No. C207

The Calcutta Gazette

THURSDAY, FEBRUARY 28, 1935.

PART VI

Bills introduced in the Council of State and Legislative Assembly, Reports of Select Committees presented to the Council and Assembly, and Bills published under Rule 18 of the Indian Legislative Rules

GOVERNMENT OF INDIA.

Legislative Assembly Department.

The following Bill was introduced in the Legislative Assembly on the 22nd January, 1935 :—

L. A. BILL No. 2 OF 1935.

A Bill to amend the Indian Naturalization Act, 1926, for certain purposes.

WHEREAS it is expedient to amend the Indian Naturalization Act, 1926, for the purposes hereinafter appearing ; It is hereby enacted as follows :— VII of 1926.

Short title and commencement.

1. (*1*) This Act may be called the Indian Naturalization (Amendment) Act, 1935.

(*2*) It shall come into force on such date as the Governor General in Council may, by notification in the Gazette of India, appoint.

Amendment of section 7, Act VII of 1926.

2. In sub-section (*1*) of section 7 of the Indian Naturalization Act, 1926 (hereinafter referred to as the said Act), the words "the wife of any such person" shall be omitted, and to the said sub-section the following words shall be added, namely :— VII of 1926.

"and the wife of any such person to whom a certificate of naturalization is granted after the commencement of the Indian Naturalization (Amendment) Act, 1935, shall, if not already a British subject, in like manner be so deemed and be so entitled and so subject, if within one year, or such longer period as the Local Government may in special circumstances allow, from the date of the taking and subscribing of such oath by her husband, she makes to the Local Government a declaration that she desires to be deemed to be a British subject ".

Amendment of section 9, Act VII of 1926.

3. In sub-section (*2*) of section 9 of the said Act,—

(*a*) before the proviso the following proviso shall be inserted, namely :—

"Provided that no such order shall be made in the case of a wife unless by reason of the acquisition by her husband of a new nationality she has also acquired that nationality "; and

(*b*) in the existing proviso, after the word "Provided" the word "further" shall be inserted.

Amendment of section 10, Act VII of 1926.

4. To sub-section (*2*) of section 10 of the said Act the following proviso shall be added, namely :—

"Provided that the wife of any such person shall not cease to be deemed to be a British subject under this sub-section, unless by reason of the acquisition by her husband of a new nationality she has also acquired that nationality."

STATEMENT OF OBJECTS AND REASONS.

The Bill relates to the national status of married women and is introduced to give effect, so far as this is required, to the articles, reproduced below, of a Convention on matters relating to the Conflict of Nationality Laws which was concluded under the auspices of the League of Nations in 1930. The Bill provides that a married woman whose husband acquires British Indian Nationality during marriage shall only acquire such nationality if she makes a declaration of her desire to do so. It also protects such a woman from loss of British Indian Nationality as a consequence of the loss of such nationality by her husband unless by reason of the acquisition of a new nationality by her husband she also has acquired that nationality. Articles 8 and 11 of the Convention do not involve any amendment of the Indian Act. The British Nationality and Status of Aliens Act, 1914, has been amended so as to bring it into accord with Article 8 and it was already in accord with Article 11.

NEW DELHI, H. D. CRAIK.

The 8th January, 1935.

CONVENTION ON CERTAIN QUESTIONS RELATING TO THE CONFLICT OF NATIONALITY LAWS.

CHAPTER II.—NATIONALITY OF MARRIED WOMEN.

Article 8.

If the national law of the wife causes her to lose her nationality on marriage with a foreigner, this consequence shall be conditional on her acquiring the nationality of the husband.

Article 9.

If the national law of the wife causes her to lose her nationality upon a change in the nationality of her husband occurring during marriage, this consequence shall be conditional on her acquiring her husband's new nationality.

Article 10.

Naturalization of the husband during marriage shall not involve a change in the nationality of the wife except with her consent.

Article 11.

The wife who, under the law of her country, lost her nationality on marriage shall not recover it after the dissolution of the marriage except on her own application and in accordance with the law of that country. If she does recover it, she shall lose the nationality which she acquired by reason of the marriage.

MD. RAFI,

Secy. to the Govt. of India.

Registered No. C207

No. 9 of 1935

The Calcutta Gazette

THURSDAY, FEBRUARY 28, 1935.

CONTENTS:

	PAGE.		PAGE.
Statement under the Cotton Ginning and Pressing Factories Act, 1925 ..	297	Weather and Crop Report for the week ending 20th February 1935	317—320
Daily Rainfall recorded in Bengal for the month of January 1935	298—313	Prices-current (wholesale and retail) of food-grains, salt, etc., in the districts of Bengal for the first half of February 1935	321—324
Statement showing water-levels of certain rivers in Bengal for the month of January 1935 ..	314—315	Statements of weekly gauge readings on certain rivers in Bengal	325—326
Vital Statistics of towns of Bengal for the week ending 16th February 1935 ..	316		

SUPPLEMENT.

Official Papers.

FORM C—BENGAL.

STATEMENT OF COTTON PRESSED IN THE BENGAL PRESIDENCY FOR THE WEEK ENDING THE 15th FEBRUARY 1935.

[Section 5(2) of the Cotton Ginning and Pressing Factories Act, 1925.]

Name of Division or block.	Number of bales pressed.				Districts included in the block.
	During the week.	During the corresponding week last year.	Since 1st September 1934 (the date prescribed by the Local Government as the commencement of the season).	During the corresponding period last year.	
The Bengal Presidency	873 or 866·69 bales of 400 lbs. each.	1,344	5,850	8,011	All districts in the Presidency.

J. B. McBRIDE,

Chief Inspector of Factories, Bengal.

DAILY RAINFALL RECORDED IN BENGAL

Note—The total and the average rainfall for all districts have been

Division and district.	Station.	1	2	3	4	5	6	7
Presidency.								
24-Parganas ..	Saugar Island (Obsy.) ..	..	..	..	..	..	..	..
	Diamond Harbour ..	..	..	..	..	..	..	..
	Budge-Budge	..	..	..	..	..	..	..
	Canning Town	..	..	..	..	..	..	..
	Alipore (Obsy.)	..	..	..	..	..	..	..
	Barrackpore	..	..	..	..	..	..	..
	Dum-Dum	..	..	..	..	..	..	..
	Baraset	..	..	..	..	..	..	..
	Basirhat	..	..	..	..	..	..	..
	Gosaba	..	..	..	..	..	..	..
Nadia ..	Ranaghat	..	..	..	..	..	..	..
	Krishnagar (Obsy.) ..	..	..	..	..	..	..	..
	Chuadanga	..	..	..	..	..	..	..
	Meherpore	..	..	..	..	..	..	..
	Kushtia	..	..	..	..	..	..	..
	Haringhata	..	..	..	..	..	..	..
Murshidabad ..	Kandi	..	..	..	..	..	..	..
	Berhampore (Obsy.) ..	..	..	..	..	..	..	..
	Lalbagh	..	..	..	..	..	..	..
	Azimgunj	..	..	..	..	..	..	..
	Jangipur	..	..	0·09	..	..	..	..
	Lalgola*							
	Akriganj	..	..	0·03	..	..	..	..
	Patkabari	..	..	..	..	..	..	..
	Dumkal	..	..	..	..	..	..	..
	Kallyangunj (Ishanpur) ..	..	..	..	..	..	..	..
	Khargram	..	..	..	..	..	..	..
	Bharatpore	..	..	..	..	..	..	..
Jessore ..	Narail	..	..	..	..	..	..	..
	Jessore (Obsy.)	..	..	..	..	..	..	..
	Jhenida	..	..	..	..	..	..	..
	Magura	..	..	..	..	..	..	..
	Bongaon	..	..	..	..	..	..	..
Khulna ..	Satkhira (Obsy.)	..	..	..	..	..	..	..
	Bagerhat	..	..	..	..	..	..	..
	Khulna (Obsy.)	..	..	..	..	..	..	..
	Kaliganj	..	..	..	..	..	..	..
	Nakipur	..	..	..	..	..	..	..
	Dumuria	..	..	..	..	..	..	..
	Rampal	..	..	..	..	..	..	..
	Kalaroa	..	..	..	..	..	..	..
	Paikgachha (Raruli) ..	..	..	..	..	..	..	..
	Mullahat	..	..	..	..	..	..	..
	Morelganj	..	..	..	..	..	..	..
	Islamkati	..	..	..	..	..	..	..
Burdwan.								
Burdwan ..	Kalna	..	..	..	..	..	..	..
	Burdwan (Obsy.)	..	..	..	..	..	..	..
	Katwa	..	..	..	..	..	..	..
	Asansol (Obsy.)	..	..	0·10	..	..	..	..
	Mankar	..	..	..	..	..	..	..
	Mangalkot*							
	Royna	..	..	..	..	..	..	..
	Monteswar	..	..	..	..	..	..	..
Birbhum ..	Suri	..	..	0·03	..	..	..	..
	Hetampur	..	0·06	..	..	..	..	..
	Rampurhat	..	..	..	..	..	..	..
	Bolpur	..	..	..	..	..	..	..
	Murarai	..	..	..	..	..	..	..
	Labpur	..	..	..	..	..	..	..
	Nalhati	..	..	..	..	..	..	..
	Mayureswar	..	..	..	..	..	..	..

*Not reported.

FOR THE MONTH OF JANUARY 1935.

calculated using the data of only those stations for which normals are available.

8	9	10	11	12	13	14	15	16	17	18	19	20
..	..	..	..	..	..	..	..	..	..	..	..	..
..	..	..	..	..	..	..	..	..	..	..	..	..
..	..	..	..	..	..	..	..	..	..	..	..	..
..	..	..	..	..	..	..	..	..	..	..	..	..
..	..	..	..	..	..	..	..	..	0·07	0·47	..	..
..	..	..	..	..	..	..	..	1·23	0·16	..	..	..
..	..	..	..	..	..	..	..	0·38	0·52	..	..	..
..	..	..	..	..	..	..	..	..	0·40	..	..	..
..	..	..	..	..	..	..	..	..	0·55	0·02	..	..
..	..	..	..	..	..	..	..	..	..	..	..	..
..	..	..	..	..	..	..	0·25	0·50	..	..	..	..
..	..	..	..	..	..	..	0·11	0·04	0·04	0·35	..	..
..	..	..	..	..	..	..	..	0·02	0·03	0·28	..	..
..	..	..	..	..	..	..	..	..	..	0·17	..	..
..	..	..	..	..	..	..	..	..	..	0·22	..	..
..	..	..	..	..	..	0·00	0·00	..	0·06	..	..	..
..	..	..	..	..	..	0·09	..	0·45	1·12	..	..	..
..	..	..	..	..	..	..	0·06	..	..	0·27	..	..
..	..	..	..	..	..	..	..	..	..	0·70	..	..
..	..	..	..	..	..	..	..	..	0·34	..	..	..
..	..	..	..	..	..	..	0·02	0·02	..	0·25	..	..
..	..	..	..	..	..	..	..	..	0·22	..	..	..
..	..	..	..	..	..	..	..	0·21	..	..	..	..
..	..	..	..	..	..	..	..	..	..	..	..	..
..	..	..	..	..	..	..	..	..	..	0·34	..	..
..	..	..	..	..	..	..	0·15	..	..	0·50	..	..
..	..	..	..	..	..	..	..	..	..	..	..	..
..	..	..	..	..	..	..	..	..	0·10	..	..	..
..	..	..	..	..	..	..	0·36	..	..	0·75	..	..
..	..	..	..	..	..	..	0·04	..	0·30	..	..	..
..	..	..	..	..	..	..	..	..	0·05	..	..	..
..	..	..	..	..	..	..	..	..	..	..	..	..
..	..	..	..	..	..	..	..	..	..	2·07	..	..
..	..	..	..	..	..	..	..	..	..	..	..	..
..	..	..	..	..	..	..	..	..	0·16	0·09	..	..
..	..	..	..	..	..	..	..	..	..	..	..	..
..	..	..	..	..	..	..	..	..	..	..	..	..
..	..	..	..	..	..	..	..	..	..	0·60	..	..
..	..	..	..	..	..	..	..	..	..	..	..	..
..	..	..	..	..	..	..	..	..	0·62	..	..	..
..	..	..	..	..	..	..	..	..	..	..	..	..
..	..	..	..	..	..	..	..	..	..	..	..	..
..	..	..	..	..	..	..	..	..	..	..	..	..
..	..	..	..	..	..	..	..	..	..	1·14	..	..
..	..	..	..	..	..	..	0·30	..	..	1·50	..	..
..	..	..	..	..	..	..	0·10	..	..	0·21	..	..
..	..	..	..	..	..	..	..	..	0·40	0·35	..	..
..	..	..	..	..	..	..	1·35	0·07	..	0·37	..	..
..	..	..	..	..	..	0·13	0·10	..	0·17	..	..	..
..	..	..	..	..	..	..	0·20	..	0·20	0·19	..	..
..	..	..	..	..	..	0·09	..	..	0·05	..	..	..
..	..	..	..	..	..	0·02	..	0·01	0·25	0·90	..	..
..	..	..	..	..	..	..	0·15	..	..	0·15	..	..
..	..	..	..	..	..	..	..	0·10	0·70	..	..	..
..	..	..	..	..	..	..	0·31	..	0·08	..	..	..
..	..	..	..	..	..	..	..	..	..	..	..	..
..	..	..	..	..	..	..	..	..	..	0·15	..	..
..	..	..	..	..	..	..	..	..	..	..	..	..
..	..	..	..	..	..	..	..	0·40	0·43	..	..	..

DAILY RAINFALL RECORDED IN BENGAL

Division and district.	Station.	21	22	23	24	25	26	27
Presidency.								
24-Parganas ..	Saugar Island (Obsy.) ..	..	..	..	..	..	..	..
	Diamond Harbour ..	..	..	..	..	..	..	..
	Budge-Budge	..	..	..	..	..	..	..
	Canning Town	..	..	..	..	..	..	..
	Alipore (Obsy.)	..	..	..	..	..	..	..
	Barrackpore	..	..	..	..	..	..	..
	Dum-Dum	..	..	..	..	..	..	..
	Baraset	..	..	..	..	..	..	..
	Basirhat	..	..	..	..	..	..	..
	Gosaba	..	..	..	..	..	..	..
Nadia ..	Ranaghat	..	..	..	..	..	..	..
	Krishnagar (Obsy.) ..	..	..	..	..	..	..	..
	Chuadanga	..	..	..	..	..	..	..
	Meherpore	..	..	..	..	..	..	..
	Kushtia	..	..	..	..	..	..	..
	Haringhata —	..	..	..	..	..	..	..
Murshidabad ..	Kandi	..	..	..	..	..	..	..
	Berhampore (Obsy.) ..	..	..	..	..	..	..	..
	Lalbagh	..	..	..	..	..	..	..
	Azimgunj	..	..	..	..	..	..	..
	Jangipur	..	..	..	..	..	..	..
	Lalgola*							
	Akriganj	..	..	..	..	..	..	..
	Patkabari	..	..	..	..	..	..	..
	Dumkal	..	..	..	..	..	..	..
	Kallyangunj (Ishanpur) ..	..	..	..	..	..	..	..
	Khargram	..	..	..	..	..	..	..
	Bharatpore	..	..	..	..	..	..	..
Jessore ..	Narail	..	..	..	..	..	..	..
	Jessore (Obsy.)	..	..	..	..	..	..	..
	Jhenida	..	..	..	..	..	..	..
	Magura	..	..	..	..	..	..	..
	Bongaon	..	..	..	..	..	..	..
Khulna ..	Satkhira (Obsy.)	..	..	..	..	..	..	..
	Bagerhat	..	..	..	..	..	..	..
	Khulna (Obsy.)	..	..	..	..	..	..	..
	Kaliganj	..	..	..	..	..	..	..
	Nakipur	..	..	..	..	..	..	..
	Dumuria	..	..	..	..	..	..	..
	Rampal	..	..	..	..	..	..	..
	Kalaroa	..	..	..	..	..	..	..
	Paikgachha (Raruli) ..	..	..	..	..	..	..	..
	Mullahat	..	..	..	..	..	..	..
	Morelganj	..	..	..	..	..	..	..
	Islamkati	..	..	..	..	..	..	..
Burdwan.								
Burdwan ..	Kalna	..	..	..	..	..	..	..
	Burdwan (Obsy.)	..	..	..	..	..	..	..
	Katwa	..	..	..	..	..	..	..
	Asansol (Obsy.)	..	..	..	..	..	..	..
	Mankar	..	..	..	..	..	..	..
	Mangalkot*							
	Royna	..	..	..	..	..	..	..
	Monteswar	..	..	..	..	..	..	..
Birbhum ..	Suri	..	..	..	..	..	..	..
	Hetampur	..	..	..	..	..	..	..
	Rampurhat	..	..	..	..	..	..	..
	Bolpur	..	..	..	..	..	..	..
	Murarai	..	..	..	..	..	..	..
	Labpur	..	..	..	..	..	..	..
	Nalhati	..	..	..	..	..	..	..
	Mayureswar	..	..	..	..	..	..	..

*Not reported.

FOR THE MONTH OF JANUARY 1935.

28	29	30	31	Number of rainy days.	Average number of rainy days.	Total rainfall for the month.	Normal rainfall for the month.	Heaviest rainfall during month.	Total rainfall from 1st December 1934 to 31st January 1935.	Normal rainfall from 1st December 1934 to 31st January 1935.
..	..	..	..	Nil	0·9	Nil	0·30	Nil	1·08	0·57
..	..	..	..	Nil	1·0	Nil	0·55	Nil	0·13	0·73
..	..	..	..	Nil	0·8	Nil	0·47	Nil	0·53	0·68
..	..	..	..	Nil	0·7	Nil	0·39	Nil	0·50	0·47
..	..	..	..	1	0·7	0·54	0·34	0·47	0·85	0·54
..	..	..	..	2	0·9	1·39	0·39	1·23	1·64	0·70
..	..	..	0·11	3	0·9	1·01	0·46	0·52	1·01	0·64
..	..	..	..	1	1·0	0·40	0·52	0·40	0·50	0·71
..	..	..	..	1	0·8	0·57	0·40	0·55	0·79	0·64
..	..	..	..	Nil	(*n*)	Nil	(*n*)	Nil	0·17	(*n*)
..	..	..	..	2	0·7	0·75	0·40	0·50	1·55	0·56
..	..	..	..	2	0·9	0·54	0·44	0·35	0·82	0·53
..	..	..	..	1	0·8	0·33	0·39	0·28	0·76	0·52
..	..	..	..	1	0·9	0·17	0·36	0·17	0·64	0·50
..	..	..	..	1	0·8	0·22	0·32	0·22	0·72	0·45
..	..	..	..	Nil	0·2	0·06	0·09	0·06	0·26	0·25
..	..	..	..	2	0·9	1·66	0·39	1·12	3·99	0·51
..	..	..	..	1	0·9	0·33	0·35	0·27	2·76	0·47
..	..	..	..	1	0·7	0·70	0·33	0·70	3·48	0·43
..	..	..	..	1	0·7	0·34	0·42	0·34	2·98	0·51
..	..	..	..	1	0·9	0·38	0·47	0·25	1·46	0·56
					1·0		0·47			0·56
..	..	..	..	1	1·0	0·25	0·42	0·22	4·40	0·48
..	..	..	..	1	0·7	0·21	0·22	0·21	1·93	0·29
..	..	..	..	Nil	0·9	Nil	0·33	Nil	1·09	0·47
..	..	..	..	1	0·7	0·34	0·31	0·34	3·38	0·44
..	..	..	..	2	(*n*)	0·65	(*n*)	0·50		(*n*)
..	..	..	..	Nil	(*n*)	Nil	(*n*)	Nil	0·91	(*n*)
..	..	..	..	1	1·0	0·10	0·51	0·10	1·20	0·68
..	..	..	..	2	0·9	1·11	0·36	0·75	1·80	0·56
..	..	..	..	1	0·9	0·34	0·40	0·30	0·63	0·54
..	..	..	..	Nil	0·8	0·05	0·37	0·05	1·00	0·51
..	..	..	..	Nil	0·7	Nil	0·35	Nil	0·17	0·59
..	..	..	..	1	0·6	2·07	0·33	2·07	2·43	0·60
..	..	..	..	Nil	0·8	Nil	0·49	Nil	1·00	0·65
..	..	..	..	1	0·7	0·25	0·47	0·16	0·89	0·90
..	..	..	..	Nil	0·7	Nil	0·59	Nil	1·00	0·70
..	..	..	..	Nil	0·5	Nil	0·27	Nil	1·03	0·36
..	..	..	..	1	0·7	0·60	0·45	0·60	1·19	0·57
..	..	..	..	Nil	0·7	Nil	0·46	Nil	Nil	0·59
..	..	..	..	1	1·1	0·62	0·45	0·62	0·86	0·59
..	..	..	..	Nil	1·0	Nil	0·57	Nil	Nil	0·71
..	..	..	..	Nil	0·8	Nil	0·30	Nil	3·33	0·49
..	..	..	..	Nil	0·9	Nil	0·50	Nil		0·66
..	..	..	..	1	0·9	1·14	0·45	1·14	1·14	0·59
..	..	..	..	2	0·8	1·80	0·39	1·50	3·08	0·54
..	..	..	..	2	0·8	0·31	0·36	0·21	3·10	0·51
..	..	..	..	2	0·9	0·75	0·40	0·40	1·32	0·52
..	..	..	..	3	1·4	1·89	0·68	1·35	1·96	0·92
..	..	..	..	3	1·1	0·40	0·43	0·17	1·97	0·55
					0·3		0·07			0·08
..	..	..	..	3	0·0	0·59	0·01	0·20	2·67	0·17
..	..	..	..	Nil	0·0	0·14	0·00	0·09		0·00
..	..	..	..	2	1·0	1·21	0·40	0·90	1·29	0·47
..	..	..	..	2	1·1	0·36	0·54	0·15	0·78	0·62
..	..	..	..	2	1·0	0·80	0·47	0·70	3·05	0·57
..	..	..	..	2	0·8	0·99	0·41	0·68	2·15	0·46
..	..	..	..	Nil	0·7	Nil	0·35	Nil		0·40
..	..	..	..	1	0·7	0·15	0·30	0·15	0·85	0·34
..	..	..	..	Nil	(*n*)	Nil	(*n*)	Nil	1·25	(*n*)
..	..	..	..	2	(*n*)	0·83	(*n*)	0·43	0·94	(*n*)

(*n*) Not ascertained.

DAILY RAINFALL RECORDED IN BENGAL

Division and district.	Station.	1	2	3	4	5	6	7
Burdwan —*concld.*								
Bankura ..	Bankura (Obsy.)	..	..	0·02	..	..	..	..
	Vishnupur	..	..	0·01	..	..	..	..
	Maliara	..	..	..	..	..	..	..
	Khatra	..	..	..	..	..	..	..
	Indas	..	..	..	..	..	..	..
	Kotalpur	..	..	..	..	..	..	..
	Onda	..	..	..	..	..	..	..
	Gangajalghati	..	..	..	..	..	..	..
	Raipur	..	..	0·02	..	..	..	..
	Sonamukhi	..	..	..	..	..	..	..
	Taldangra	..	..	..	..	..	..	..
	Saranga	..	..	..	..	..	..	..
	Indpur	..	..	..	..	..	..	..
	Arhara	..	..	..	..	..	..	..
	Barjora	..	..	..	..	..	..	..
	Simlapal	..	..	..	..	..	..	..
	Mejia*							
	Siromanipur	..	..	..	..	..	..	..
	Palasdanga	..	..	..	..	..	..	..
	Chatna	..	..	..	..	..	..	..
	Ranibandh	..	..	..	..	..	..	..
	Saltora	..	..	..	..	..	..	..
	Joypur	..	..	..	..	..	..	..
	Ambikanagar	..	..	..	..	..	..	..
	Joyrampur*							
Midnapore ..	Contai	..	..	..	..	..	..	..
	Tamluk	..	..	..	..	..	..	..
	Midnapore (Obsy.) ..	..	..	..	..	..	..	..
	Ghatal	..	..	..	..	..	..	..
	Kukrahati	..	..	..	..	..	..	..
	Amlagura	..	..	..	0·03	..	..	..
	Panskura	..	..	..	..	..	..	..
	Dantan	..	..	..	..	..	..	..
	Chandrakona*							
	Pachet	..	..	..	..	..	..	..
	Bhagwanpur	..	..	..	..	..	..	..
	Kashiary	..	..	..	..	..	..	..
	Nayabasan	..	..	..	..	..	..	..
	Silda (Belpabari) ..	..	..	..	..	..	..	..
	Goaltore	..	..	..	..	..	..	..
	Salboni	..	..	..	..	..	..	..
	Narayangarh	..	..	..	..	..	..	..
	Ramnagar	..	..	..	..	..	..	..
	Mohanpur	..	..	..	..	..	..	..
	Jenka (Khajri)	..	..	..	..	..	..	..
	Nandigram	..	..	..	..	..	..	..
	Moyna	..	..	..	..	..	..	..
	Pingla*							
	Narajole	..	..	..	..	..	..	..
	Kolaghat (Dainan) ..	..	..	..	..	..	..	..
	Balichak	..	..	..	..	..	..	..
	Jhargram	..	..	..	..	..	..	..
	Kharagpur	..	..	..	..	..	..	..
Hooghly ..	Serampore	..	..	..	..	..	..	..
	Hooghly	..	..	..	..	..	..	..
	Arambagh	..	..	..	..	..	..	..
	Chanditala	..	..	..	..	..	..	..
	Tentulia	..	..	..	..	..	..	..
	Boinchee	..	..	..	..	..	..	..
	Khanakul	..	..	..	..	..	..	..
	Tarakeswar	..	..	..	..	..	..	..
Howrah ..	Howrah	..	..	..	..	..	..	..
	Uluberia	..	..	..	..	..	..	..
	Amta	..	..	..	..	..	..	..
Rajshahi.								
Rajshahi ..	Boalia (Obsy.)	..	..	..	..	..	..	..
	Nator	..	..	..	..	..	..	..
	Naogaon	..	..	..	..	..	..	..
	Lalpur	..	..	..	..	..	..	..
	Manda	..	..	..	..	..	..	..
	Mahadebpur*							
	Tanor*							
	Chaugram*							
	Joari*							
	Badalgachi	..	..	..	..	..	..	..

*Not reported.

FOR THE MONTH OF JANUARY 1935.

8	9	10	11	12	13	14	15	16	17	18	19	20
..	..	..	..	..	..	..	..	..	..	0·44	..	..
..	..	..	..	..	..	..	..	..	..	0·42	..	..
..	..	..	..	..	..	..	..	..	..	..	..	..
..	..	..	..	..	..	..	..	0·25	0·12	0·50	..	..
..	..	..	..	..	..	..	0·38	..	..	0·33	..	..
..	..	0·33	..	..	..	..	..	..	..	..	..	..
..	..	..	..	..	..	..	..	..	..	0·11	..	..
..	..	..	..	..	..	..	0·25	0·17	..	0·48	..	..
..	..	..	..	..	..	..	..	0·28	0·01	0·22	..	..
..	..	..	..	..	..	..	..	..	..	..	..	..
..	..	..	..	..	..	..	..	..	..	0·35	..	..
..	..	..	..	..	..	..	..	..	..	0·66	..	..
..	..	..	..	..	..	..	..	0·10	..	0·50	..	..
..	..	..	..	..	..	..	0·50	..	..	..	..	..
..	..	..	..	..	..	..	0·21	0·09	..	0·29	..	..
..	..	..	..	..	..	..	0·05	..	0·40	..	..	..
..	..	..	..	..	..	..	..	..	0·38	..	..	..
..	..	..	..	..	..	..	0·20	0·15	..	..	..	..
..	..	..	..	..	..	..	..	..	..	0·38	..	..
..	..	..	..	..	..	..	..	..	0·10	..	..	..
..	..	..	..	..	..	..	..	..	..	..	..	..
..	..	..	..	..	..	..	..	..	..	0·62	..	..
..	..	..	..	..	..	0·32	0·41	..	..	..	..	0·23
..	..	..	..	..	..	..	..	..	0·13	..	..	..
..	..	..	..	..	..	..	..	..	..	..	..	..
..	..	..	..	..	..	..	..	..	0·63	0·04	..	..
..	..	..	..	..	..	..	..	..	0·50	..	..	..
..	..	..	..	..	..	..	..	..	..	..	..	..
..	..	..	..	..	..	..	..	0·06	..	0·35	..	..
..	..	..	..	..	..	..	..	..	0·25	..	..	..
..	..	..	..	..	..	..	..	..	..	..	..	..
..	..	..	0·30	..	..	..	..	..	..	..	..	..
..	..	..	..	..	..	..	..	..	..	..	..	..
..	..	..	..	..	..	..	..	..	1·20	..	..	..
..	..	..	..	..	..	..	..	..	0·20	..	..	..
..	..	..	..	..	..	..	0·52	0·04	0·89	..	..	..
..	..	..	..	..	..	..	..	0·19	0·29	0·58	..	..
..	..	..	..	..	..	..	..	0·19	..	0·43	..	..
..	..	..	..	..	..	..	..	..	1·70	..	..	..
..	..	..	..	..	..	..	..	..	..	..	..	..
..	..	..	..	..	..	..	..	..	..	..	..	..
..	..	..	..	..	..	..	..	..	..	..	..	..
..	..	..	..	..	..	..	..	..	..	..	..	..
..	..	..	..	..	..	..	..	..	1·20	..	..	..
..	..	..	..	..	..	..	..	..	0·07	0·02	..	..
..	..	..	..	..	..	..	..	..	0·30	0·05	..	..
..	..	..	..	..	..	..	..	0·76	0·22	..	..	..
..	..	..	..	..	..	..	..	0·15	0·18	..	..	..
..	..	..	..	..	..	..	..	0·27	0·07	..	..	..
..	..	..	..	..	..	..	0·02	..	..	0·24	..	..
..	..	..	..	..	..	..	..	0·02	..	0·44	..	..
..	..	..	..	..	..	..	..	..	1·90	0·71	..	..
..	..	..	..	..	..	..	..	..	0·33	..	..	..
..	..	..	..	..	..	..	0·10	..	..	..	..	..
..	..	..	..	..	..	..	..	..	0·61	..	..	..
..	..	..	..	..	..	..	..	..	0·30	..	..	..
..	..	..	..	..	..	..	..	..	0·46	0·86	..	..
..	..	..	..	..	..	..	..	..	..	..	..	..
..	..	..	..	..	..	..	..	..	..	0·20	..	..
..	..	..	..	..	..	..	..	..	..	0·17	..	..
..	..	..	..	..	..	..	..	..	0·04	..	..	..
..	..	..	..	..	..	..	..	..	..	..	0·12	..
..	..	..	..	..	..	..	..	..	..	..	..	..
..	..	..	..	..	..	..	..	..	0·30	..	..	..
..	..	..	..	..	..	..	..	0·10	0·60	..	..	..

DAILY RAINFALL RECORDED IN BENGAL

Division and district.	Station.	21	22	23	24	25	26	27
Burdwan—*concld.*								
Bankura ..	Bankura (Obsy.)	..	..	..	..	..	..	..
	Vishnupur	..	..	..	..	..	..	..
	Maliara	..	..	..	..	..	..	..
	Khatra	..	..	..	..	..	..	..
	Indas	..	..	..	..	..	..	..
	Kotalpur	..	..	..	..	..	..	..
	Onda	..	..	..	..	..	..	..
	Gangajalghati	..	..	..	..	..	..	..
	Raipur	..	..	..	..	..	..	..
	Sonamukhi	..	..	..	..	..	..	..
	Taldangra	..	..	..	..	..	..	..
	Saranga	..	..	..	..	..	..	..
	Indpur	..	..	..	..	..	..	..
	Arhara	..	..	..	..	..	..	..
	Barjora	..	..	..	..	..	..	..
	Simlapal	..	..	..	..	..	..	..
	Mejia*							
	Siromanipur	..	..	..	..	..	..	..
	Palasdanga	..	..	..	..	..	0·28	..
	Chatna	..	..	..	..	..	..	..
	Ranibandh	..	..	..	..	..	..	..
	Saltora	..	..	..	..	..	..	..
	Joypur	..	..	..	..	..	..	..
	Ambikanagar	0·12	0·24	..	..	..	..	..
	Joyrampur*							
Midnapore ..	Contai	..	..	..	..	..	..	..
	Tamluk	..	..	..	..	..	..	..
	Midnapore (Obsy.) ..	..	..	..	..	..	..	..
	Ghatal	..	..	..	..	..	..	..
	Kukrahati	..	..	..	..	..	..	..
	Amlagura	..	..	..	..	..	..	..
	Panskura	..	..	..	..	..	..	..
	Dantan	..	..	..	..	..	..	..
	Chandrakona*							
	Pachet	..	..	..	..	0·07	..	..
	Bhagwanpur	..	..	..	..	..	..	..
	Kashiary	..	..	..	..	..	..	..
	Nayabasan	..	..	..	..	..	..	..
	Silda (Belpabari) ..	..	..	..	..	..	..	..
	Goaltore	..	..	..	..	..	..	..
	Salboni	..	..	..	..	..	..	..
	Narayangarh	..	..	..	..	..	..	..
	Ramnagar	..	..	..	..	..	..	..
	Mohanpur	..	..	..	..	..	..	..
	Jenka (Khajri)	..	..	..	..	..	..	..
	Nandigram	..	..	..	..	..	..	..
	Moyna	..	..	..	..	..	..	..
	Pingla*							
	Narajole	..	..	..	..	..	..	..
	Kolaghat (Dainan) ..	..	..	..	..	..	..	..
	Balichak	..	..	..	..	..	..	..
	Jhargram	..	..	..	..	..	..	..
	Kharagpur	..	..	..	..	..	..	..
Hooghly ..	Serampore	..	..	..	..	..	..	..
	Hooghly	..	..	..	..	..	..	..
	Arambagh	..	..	..	..	..	..	..
	Chanditala	..	..	..	..	..	..	..
	Tentulia	..	..	..	..	..	..	..
	Boinchee	..	..	..	..	..	..	..
	Khanakul	..	..	..	..	..	..	..
	Tarakeswar	..	..	..	..	..	..	..
Howrah ..	Howrah	..	..	..	..	..	..	..
	Uluberia	..	..	..	..	..	..	..
	Amta	..	..	..	..	..	..	..
Rajshahi.								
Rajshahi ..	Boalia (Obsy.)	..	..	..	..	..	..	..
	Nator	..	..	..	..	..	..	..
	Naogaon	..	..	..	..	..	..	..
	Lalpur	..	..	..	..	..	..	..
	Manda	..	..	..	..	..	..	..
	Mahadebpur*							
	Tanor*							
	Chaugram*							
	Joari*							
	Badalgachi	..	..	..	..	..	..	..

*Not reported.

FOR THE MONTH OF JANUARY 1935.

28	29	30	31	Number of rainy days.	Average number of rainy days.	Total rainfall for the month.	Normal rainfall for the month.	Heaviest rainfall during month.	Total rainfall from 1st December 1934 to 31st January 1935.	Normal rainfall from 1st December 1934 to 31st January 1935.
..	..	..	..	1	1·2	0·46	0·51	0·44	0·58	0·59
..	..	..	..	1	1·0	0·43	0·37	0·42	0·93	0·50
..	..	..	..	Nil	1·1	Nil	0·47	Nil	1·92	0·58
..	..	..	..	3	1·1	0·87	0·44	0·50	1·17	0·61
..	..	..	..	2	1·0	0·71	0·36	0·38	1·66	0·46
..	..	..	0·17	2	0·7	0·50	0·35	0·33	1·43	0·45
..	..	..	..	1	1·0	0·11	0·31	0·11	0·51	0·39
..	..	..	..	3	1·1	0·90	0·43	0·48	1·44	0·51
..	..	..	..	2	1·0	0·53	0·48	0·28	0·64	0·63
..	..	..	..	Nil	1·0	Nil	0·42	Nil	Nil	0·52
..	..	..	..	1	0·7	0·35	0·33	0·35	0·35	0·33
..	..	..	..	1	1·2	0·66	0·40	0·66	0·67	0·40
..	..	..	..	2	1·2	0·60	0·30	0·50	1·00	0·30
..	..	..	0·20	2	(*n*)	0·70	(*n*)	0·50	0·94	(*n*)
..	..	..	..	2	(*n*)	0·59	(*n*)	0·29	2·23	(*n*)
..	..	..	0·75	2	(*n*)	1·20	(*n*)	0·75	1·20	(*n*)
					(*n*)		(*n*)			(*n*)
..	..	..	0·15	2	(*n*)	0·53	(*n*)	0·38	0·69	(*n*)
..	..	..	..	3	(*n*)	0·63	(*n*)	0·28		(*n*)
..	..	..	0·18	2	(*n*)	0·56	(*n*)	0·38	0·56	(*n*)
..	..	..	..	1	(*n*)	0·10	(*n*)	0·10	0·12	(*n*)
..	..	..	..	Nil	(*n*)	Nil	(*n*)	Nil	Nil	(*n*)
..	..	..	..	1	(*n*)	0·62	(*n*)	0·62		(*n*)
..	..	..	..	5	(*n*)	1·32	(*n*)	0·41		(*n*)
					(*n*)		(*n*)			(*n*)
..	..	..	..	1	0·8	0·13	0·46	0·13	0·26	0·69
..	..	..	0·20	1	0·8	0·20	0·39	0·20	0·20	0·57
..	..	..	..	1	0·9	0·67	0·46	0·63	0·77	0·71
..	..	..	..	1	0·8	0·50	0·36	0·50	0·53	0·55
..	..	..	0·28	1	0·8	0·28	0·49	0·28	0·28	0·57
..	..	..	..	1	0·9	0·44	0·41	0·35	0·48	0·57
..	..	..	..	1	0·9	0·25	0·49	0·25	0·45	0·65
..	..	..	..	Nil	1·2	Nil	0·47	Nil	0·72	0·60
					0·2		0·21			0·65
..	..	..	..	1	0·6	0·37	0·27	0·30	0·37	0·32
..	..	..	..	Nil	0·6	Nil	0·27	Nil	0·51	0·41
..	..	..	0·55	2	0·4	1·75	0·29	1·20	3·38	0·34
..	..	..	..	1	0·7	0·20	0·47	0·20	1·65	0·80
..	..	..	0·01	2	1·1	1·46	0·39	0·89	1·57	0·49
..	..	..	..	3	0·9	1·06	0·28	0·58	1·46	0·46
..	..	..	..	2	0·2	0·62	0·02	0·46	0·62	0·23
..	..	..	..	1	1·1	1·70	0·65	1·70	2·74	0·88
..	..	..	..	Nil	0·5	Nil	0·33	Nil	0·22	0·36
..	..	..	..	Nil	0·8	Nil	0·29	Nil	0·21	0·30
..	..	..	..	Nil	0·9	Nil	0·21	Nil	0·40	0·27
..	..	..	..	Nil	0·7	Nil	0·34	Nil	Nil	0·37
..	..	..	..	Nil	0·5	Nil	0·11	Nil	Nil	0·13
					0·5		0·17			0·18
..	..	..	0·40	2	0·5	1·60	0·19	1·20		0·34
..	..	..	..	Nil	(*n*)	0·09	(*n*)	0·07	0·41	(*n*)
..	..	..	..	1	(*n*)	0·35	(*n*)	0·30	0·87	(*n*)
..	..	..	0·30	3	(*n*)	1·28	(*n*)	0·76	1·33	(*n*)
..	..	..	..	2	(*n*)	0·33	(*n*)	0·18	0·91	(*n*)
..	..	..	0·05	1	0·9	0·39	0·38	0·27	0·45	0·58
..	..	..	..	1	0·9	0·26	0·34	0·24	1·76	0·61
..	..	..	..	1	0·9	0·46	0·40	0·44	1·50	0·65
..	..	..	..	2	(*n*)	2·61	(*n*)	1·90		(*n*)
..	..	..	..	1	(*n*)	0·33	(*n*)	0·33	0·33	(*n*)
..	..	..	0·07	1	(*n*)	0·17	(*n*)	0·10		(*n*)
..	..	..	0·29	2	(*n*)	0·90	(*n*)	0·61	0·90	(*n*)
..	..		0·15	2	(*n*)	0·45	(*n*)	0·30		(*n*)
..	..	..	..	2	0·8	1·32	0·40	0·86	1·34	0·59
..	..	..	..	Nil	0·8	Nil	0·42	Nil	0·38	0·57
..	..	..	..	1	1·1	0·20	0·41	0·20	0·20	0·65
..	..	..	..	1	0·8	0·17	0·35	0·17	2·20	0·41
..	..	..	..	Nil	0·9	0·04	0·47	0·04	0·81	0·55
..	..	..	..	1	0·8	0·12	0·35	0·12	0·12	0·44
..	..	..	..	Nil	0·8	Nil	0·32	Nil	0·70	0·42
..	..	..	..	1	0·9	0·30	0·43	0·30	0·30	0·45
					0·9		0·39			0·48
					0·7		0·58			0·66
					(*n*)		(*n*)			(*n*)
					(*n*)		(*n*)			(*n*)
..	..	..	..	2	(*n*)	0·70	(*n*)	0·60	0·90	(*n*)

(*n*) Not ascertained.

DAILY RAINFALL RECORDED IN BENGAL

Division and district.	Station.	1	2	3	4	5	6	7
Rajshahi —*concld.*								
Dinajpur ..	Nithpur	..	..	..	..	..	..	..
	Nawabganj	..	..	..	..	..	..	..
	Gangarampur	..	0·03	..	..	..	..	..
	Itahar	..	0·09	..	..	..	..	..
	Raiganj	..	..	0·64	..	..	..	..
	Dinajpur (Obsy.)	..	..	0·04	..	..	..	..
	Balurghat	..	..	..	..	..	..	..
	Thakurgaon	..	..	0·10	..	..	..	..
	Setabganj	..	..	0·15	..	..	..	..
	Ramganj	..	..	..	..	..	..	..
	Atwari*							
	Birganj	..	..	0·17	..	..	..	..
	Parbatipur	..	..	..	..	..	..	..
	Patnitola	..	..	..	..	..	..	..
	Sapahar*							
Jalpaiguri ..	Jalpaiguri (Obsy.)	..	..	0·11	0·13	..	..	..
	Alipur Duars	..	..	0·02	0·11	..	..	..
	Falakata	..	..	..	0·19	..	..	..
	Debiganj	..	..	0·10	0·14	..	..	..
	Buxa	..	0·07	0·45	0·13	..	..	..
	Kalchini	..	..	0·04	0·34	..	..	..
	Kumargram	..	..	..	..	..	..	..
Darjeeling ..	Siliguri	..	..	0·24	0·37	..	..	..
	Darjeeling (Obsy.)	..	..	0·32	0·71	..	..	..
	Kalimpong (Obsy.)	..	..	0·17	0·55	..	..	..
	Mongpoo	0·02	..	0·12	0·68	..	..	..
	Kurseong	..		0·19	0·88	..	..	..
	Pedong	..		0·13	0·38	..	..	..
Rangpur ..	Bhawaniganj (Gaibandha)	..	..	..	..	..	..	..
	Rangpur (Obsy.)	..	..	..	..	..	..	..
	Pirganj	..	..	..	..	..	..	..
	Kurigaon	..	..	..	..	..	..	..
	Gobindganj	..	..	..	..	..	..	..
	Bagdogra (Nilphamari)	..	..	..	..	..	..	..
	Ulipur	..	..	..	..	..	..	..
	Sunderganj*							
	Saidpur	..	0·14	..	..	..	..	..
Bogra ..	Sherpur*							
	Nowkhilla	..	..	..	..	..	..	..
	Bogra (Obsy.)	..	..	..	..	..	..	..
	Panchbibi	..	..	..	..	..	..	..
	Khetlal	..	..	..	..	..	..	..
	Adamdighi	..	..	..	..	..	..	..
	Dubchanchia	..	..	..	..	..	..	..
Pabna ..	Shazadpur	..	..	..	..	..	..	..
	Pabna	..	..	..	..	..	..	..
	Sirajganj (Obsy.)	..	..	..	..	..	..	..
	Iswardi	..	..	..	..	..	..	..
Malda ..	Malda (Obsy.)	..	..	0·03	..	..	..	..
	Chanchal	0·10	..	..	..	..	..	..
	Gazol	..	..	..	..	..	..	..
	Sibganj*							
	Gomastapur*							
	Nawabganj*							
Dacca.								
Dacca ..	Munshiganj	..	..	..	..	..	..	..
	Dacca	..	..	..	..	..	..	..
	Nawabganj	..	..	..	..	..	..	..
	Narayanganj (Obsy.)	..	..	..	..	..	..	..
	Narsingdi	..	..	..	..	..	..	..
	Manickganj	..	..	..	..	..	..	..
	Joydebpur	..	..	..	..	..	..	..
	Kapasia	..	..	..	..	..	..	..

*Not reported.

FOR THE MONTH OF JANUARY 1935.

8	9	10	11	12	13	14	15	16	17	18	19	20
..	..	..	..	..	..	..	..	..	..	0·11	..	..
..	..	..	..	..	..	..	..	..	..	..	..	..
..	..	..	..	..	..	..	..	0·02	..	..	..	..
..	..	..	..	0·28	..	..	..	0·11	..	..	..	..
..	..	..	..	..	..	..	..	..	..	..	..	..
..	..	..	..	..	..	..	..	..	..	..	..	..
..	..	..	..	..	..	..	..	..	0·20	..	..	..
..	..	..	..	..	..	..	..	..	..	..	..	..
..	..	..	..	..	..	..	..	..	..	..	..	..
..	..	..	..	..	..	..	..	..	..	..	..	..
..	..	..	..	..	..	..	..	..	..	..	..	..
..	..	..	..	..	..	..	..	..	..	..	..	..
..	..	..	..	..	..	..	..	0·50	..	0·21	..	..
..	..	..	..	..	..	..	..	..	..	..	..	..
..	..	..	..	..	..	..	..	..	..	..	..	..
..	..	..	..	..	..	..	..	..	..	..	..	..
..	..	..	..	..	..	..	..	..	..	..	..	..
..	..	..	..	..	..	..	..	..	..	..	..	..
..	..	..	..	..	..	..	..	..	..	..	..	..
..	..	..	..	..	..	..	..	..	..	0·01	..	..
..	..	..	..	..	..	..	..	..	..	..	..	..
..	..	..	..	..	..	..	..	..	..	..	..	..
..	..	..	..	..	..	..	..	..	..	..	..	..
..	..	..	..	..	..	..	..	..	..	0·10	..	..
..	..	..	..	..	..	..	..	..	..	0·03	..	..
..	..	..	..	..	..	..	..	..	..	..	..	..
..	..	..	..	..	..	..	..	..	..	0·15	..	0·01
..	..	..	..	..	..	..	..	..	..	0·06	..	..
..	..	..	..	..	..	..	..	..	..	..	..	..
..	..	..	..	..	..	..	..	..	..	..	..	..
..	..	..	..	..	..	..	..	..	..	..	..	..
..	..	..	..	..	..	..	..	..	..	..	..	..
..	..	..	..	..	..	..	..	..	..	..	..	..
..	..	..	..	..	..	..	..	..	..	..	..	..
..	..	..	..	..	..	..	..	..	0·03	0·11	..	..
..	..	..	..	..	..	..	..	..	0·25	..	..	..
..	..	..	..	..	..	..	..	..	..	..	..	..
..	..	..	..	..	..	..	..	..	..	..	..	..
..	..	..	..	..	..	..	..	..	0·10	..	..	..
..	..	..	..	..	..	..	..	..	0·10	..	..	..
..	..	..	..	..	..	..	0·03	..	..	0·15	..	..
..	..	..	..	..	..	..	..	..	..	0·08	..	..
..	..	..	..	..	..	..	0·29	..	..	0·42	..	..
..	..	..	..	..	..	..	..	..	..	0·19	..	..
..	..	..	..	..	..	..	..	0·73	..	..	..	..
..	..	..	..	..	..	..	..	..	0·42	..	..	..
..	..	..	..	..	..	..	..	..	..	0·04	..	..
..	..	..	..	..	..	..	..	..	..	0·13	..	..
..	..	..	..	..	..	..	..	..	..	0·05	..	..
..	..	..	..	..	..	..	..	..	..	..	..	..
..	..	..	..	..	..	..	..	..	..	0·16	..	..
..	..	..	..	..	..	..	..	..	..	..	..	..
..	..	..	..	..	..	..	..	..	0·32	..	..	..

DAILY RAINFALL RECORDED IN BENGAL

Division and district.	Station.	21	22	23	24	25	26	27
Rajshahi—*concld.*								
Dinajpur ..	Nithpur	..	..	..	..	..	..	..
	Nawabganj	..	..	..	..	..	..	..
	Gangarampur	..	..	..	..	..	..	..
	Itahar	..	..	..	..	..	..	..
	Raiganj	..	..	..	..	..	..	..
	Dinajpur (Obsy.) ..	..	..	..	..	..	..	..
	Balurghat	..	..	..	..	..	..	..
	Thakurgaon	..	..	..	..	..	..	..
	Setabganj	..	..	..	..	..	..	..
	Ramganj	..	..	..	..	..	..	..
	Atwari*							
	Birganj	..	..	..	..	..	..	..
	Parbatipur	..	..	..	..	..	..	..
	Patnitola	..	..	..	..	..	..	..
	Sapahar*							
Jalpaiguri ..	Jalpaiguri (Obsy.) ..	..	..	..	..	..	..	..
	Alipur Duars	..	..	..	..	..	..	..
	Falakata	..	..	..	..	..	..	..
	Debiganj	..	..	..	..	..	..	..
	Buxa	..	..	..	..	..	..	..
	Kalchini	..	..	..	..	..	..	..
	Kumargram	..	..	..	..	..	..	..
Darjeeling ..	Siliguri	..	..	..	..	..	..	..
	Darjeeling (Obsy.) ..	..	..	..	..	..	..	..
	Kalimpong (Obsy.) ..	..	..	(a)	(a)	..	..	..
	Mongpoo	..	..	..	..	..	..	..
	Kurseong	..	..	..	..	..	..	..
	Pedong	..	..	..	..	..	..	..
Rangpur ..	Bhawaniganj (Gaibandha) ..	..	..	..	..	..	..	..
	Rangpur (Obsy.) ..	..	..	..	..	..	..	..
	Pirganj	..	..	..	..	..	..	..
	Kurigaon	..	..	..	..	..	..	..
	Gobindganj	..	..	..	..	..	..	..
	Bagdogra (Nilphamari) ..	..	..	..	..	..	..	..
	Ulipur	..	..	..	..	..	..	..
	Sunderganj*							
	Saidpur	..	..	..	..	..	..	..
Bogra ..	Sherpur*							
	Nowkhilla	..	..	..	..	..	..	..
	Bogra (Obsy.) ..	..	..	..	..	..	..	..
	Panchbibi	..	..	..	..	..	..	..
	Khetlal	..	..	..	..	..	..	..
	Adamdighi	..	..	..	..	..	..	..
	Dubchanchia	..	..	..	..	..	..	..
Pabna ..	Shazadpur	..	..	..	..	..	..	..
	Pabna	..	..	..	..	..	..	..
	Sirajganj (Obsy.) ..	..	..	..	..	..	..	..
	Iswardi	..	..	..	..	..	..	..
Malda ..	Malda (Obsy.)	..	..	..	..	..	..	..
	Chanchal	..	..	..	..	..	..	..
	Gazol	..	..	..	..	..	..	..
	Sibganj*							
	Gomastapur*							
	Nawabganj*							
Dacca.								
Dacca ..	Munshiganj	..	..	..	..	..	..	..
	Dacca	..	..	..	..	..	..	..
	Nawabganj	..	..	..	..	..	..	..
	Narayanganj (Obsy.) ..	..	..	..	..	..	..	..
	Narsingdi	..	..	..	..	..	..	..
	Manickganj	..	..	..	..	..	..	..
	Joydebpur	..	..	..	..	..	..	..
	Kapasia	..	..	..	..	..	..	..

* Not reported.
(a) Not reported.

FOR THE MONTH OF JANUARY 1935.

28	29	30	31	Number of rainy days.	Average number of rainy days.	Total rainfall for the month.	Normal rainfall for the month.	Heaviest rainfall during month.	Total rainfall from 1st December 1934 to 31st January 1935.	Normal rainfall from 1st December 1934 to 31st January 1935.
..	..	..	..	1	0·7	0·11	0·62	0·11	0·86	0·62
..	..	..	..	Nil	0·4	Nil	0·15	Nil	Nil	0·15
..	..	..	..	Nil	0·7	0·05	0·25	0·03	0·15	0·40
..	..	..	..	2	0·7	0·48	0·35	0·28	0·48	0·44
..	..	..	..	1	0·7	0·64	0·35	0·64	0·64	0·46
..	..	..	..	Nil	0·8	0·04	0·32	0·04	0·19	0·38
..	..	..	..	1	0·8	0·20	0·36	0·20	0·20	0·44
..	..	..	..	1	0·6	0·10	0·30	0·10	1·27	0·35
..	..	..	..	1	0·4	0·15	0·14	0·15	1·40	0·20
..	..	..	..	Nil	0·5	Nil	0·18	Nil	Nil	0·19
					0·4		0·14			0·16
..	..	..	..	1	0·4	0·17	0·17	0·17	0·65	0·24
..	..	..	..	Nil	0·4	Nil	0·10	Nil	1·35	0·13
..	..	..	..	2	(*n*)	0·71	(*n*)	0·50	0·73	(*n*)
					(*n*)		(*n*)			(*n*)
..	..	..	..	2	0·7	0·24	0·30	0·13	0·84	0·41
..	..	..	..	1	0·7	0·13	0·31	0·11	0·18	0·45
..	..	..	..	1	0·8	0·19	0·23	0·19	0·60	0·39
..	..	..	..	2	0·7	0·24	0·35	0·14	0·38	0·40
..	..	..	..	2	2·3	0·65	1·00	0·45	1·32	1·61
..	..	..	..	1	1·1	0·39	0·34	0·34	0·61	0·49
..	..	..	..	Nil	0·8	Nil	0·40	Nil	0·46	0·62
..	..	..	..	2	1·0	0·61	0·38	0·37	2·19	0·48
..	..	..	..	2	1·3	1·03	0·55	0·71	1·75	0·79
..	..	..	..	3	1·2	0·82	0·57	0·55	1·96	0·84
..	..	..	..	2	1·2	0·85	0·54	0·68	1·01	0·85
..	..	..	..	2	1·7	1·07	0·67	0·88	1·82	0·93
..	..	..	..	3	1·8	0·67	0·65	0·38	1·97	1·09
..	..	..	..	Nil	0·8	0·06	0·32	0·06	0·26	0·41
..	..	..	..	Nil	0·9	Nil	0·34	Nil	0·96	0·38
..	..	..	..	Nil	0·4	Nil	0·14	Nil	Nil	0·24
..	..	..	..	Nil	0·7	Nil	0·36	Nil	Nil	0·46
..	..	..	..	Nil	0·6	Nil	0·20	Nil		0·26
..	..	..	..	Nil	0·8	Nil	0·35	Nil	Nil	0·43
..	..	..	..	Nil	0·8	Nil	0·24	Nil	Nil	0·30
					0·6		0·21			0·28
..	..	..	..	1	0·3	0·14	0·07	0·14	0·20	0·12
					0·7		0·40			0·52
..	..	..	..	Nil	0·8	Nil	0·38	Nil	0·37	0·49
..	..	..	..	1	0·9	0·14	0·38	0·11	1·66	0·45
..	..	..	..	1	0·7	0·25	0·32	0·25	0·25	0·41
..	..	..	..	Nil	0·3	Nil	0·15	Nil	0·25	0·15
..	..	..	..	Nil	(*n*)	Nil	(*n*)	Nil	0·95	(*n*)
..	..	..	..	1	(*n*)	0·10	(*n*)	0·10	0·46	(*n*)
..	..	..	..	1	0·2	0·10	0·08	0·10	1·39	0·21
..	..	..	..	1	0·7	0·18	0·32	0·15	0·69	0·43
..	..	..	..	Nil	0·7	0·08	0·32	0·08	0·32	0·43
..	..	..	..	2	0·2	0·71	0·05	0·42	1·76	0·23
..	..	..	..	1	0·9	0·22	0·55	0·19	0·56	0·60
..	..	..	..	2	0·9	0·83	0·43	0·73	0·88	0·48
..	..	..	..	1	0·7	0·42	0·35	0·42	0·42	0·40
					0·9		0·58			0·66
					0·6		0·23			0·33
					1·0		0·35			0·45
..	..	..	..	Nil	1·0	Nil	0·46	Nil	1·28	0·67
..	..	..	..	Nil	0·8	0·04	0·34	0·04	0·53	0·51
..	..	..	..	1	0·3	0·13	0·17	0·13	2·50	0·38
..	..	..	..	Nil	0·9	0·05	0·30	0·05	0·60	0·49
..	..	..	..	Nil	0·7	Nil	0·18	Nil	0·33	0·45
..	..	..	..	1	0·9	0·15	0·39	0·15	0·86	0·54
..	..	..	..	Nil	0·8	Nil	0·36	Nil	0·83	0·49
..	..	..	..	1	0·5	0·32	0·30	0·32	0·98	0·44

(*n*) Not ascertained.

DAILY RAINFALL RECORDED IN BENGAL

Division and district.	Station.	1	2	3	4	5	6	7
Dacca—*concld.*								
Mymensingh ..	Kishoreganj	..	..	..	..	..	..	..
	Atia (Tangail)	..	..	..	..	..	..	..
	Sarisabari	..	..	..	..	..	..	..
	Mymensingh (Obsy.) ..	..	..	..	..	..	..	..
	Jamalpur	..	..	..	..	..	..	..
	Netrokona	..	..	..	..	..	..	..
	Pingna	..	..	..	..	..	..	..
	Durgapur*							
	Sherpur (Town)	..	..	..	..	..	..	..
	Dewanganj	..	..	..	..	..	..	..
	Nalitabari	..	..	..	..	..	..	..
Faridpur ..	Madaripur	..	..	..	..	..	..	..
	Faridpur (Obsy.) ..	..	..	..	..	..	..	..
	Rajbari (Goalundo) ..	..	..	..	..	..	..	..
	Haridaspur	..	..	..	..	..	..	..
	Takerhat	..	..	..	..	..	..	..
	Bhanga	..	..	..	..	..	..	..
	Pangsa	..	..	..	..	..	..	..
	Baliakandi	..	..	..	..	..	..	..
	Bhusna	..	..	..	..	..	..	..
	Palong*							
Bakarganj ..	Patuakhali	..	..	..	..	..	..	..
	Barguna	..	..	..	..	..	..	..
	Pirojpur	..	..	..	..	..	..	..
	Barisal (Obsy.) ..	..	..	..	..	..	..	..
	Gaurnadi	..	..	..	..	..	..	..
	Bhola	..	..	..	..	..	..	..
	Daulatkhan	..	..	..	..	..	..	..
	Bauphal	..	..	..	..	..	..	..
Chittagong.								
Chittagong ..	Cox's Bazar (Obsy.) ..	..	..	..	..	..	..	..
	Chittagong (Obsy.) ..	..	..	..	..	..	..	..
	Kutubdia	..	..	..	..	..	..	..
	Satkania	..	..	..	..	..	..	..
	Mirsarai	..	..	..	..	..	..	..
	Rangunia	..	..	..	..	..	..	..
Tippera ..	Comilla (Obsy.)	..	..	..	..	..	..	..
	Chandpur	..	..	..	..	..	..	..
	Brahmanbaria	..	..	..	..	..	..	..
	Ramchandrapur	..	..	..	..	..	..	..
	Nasirnagar*							
	Daudkandi	..	..	..	..	..	..	..
	Kasba	..	..	..	..	..	..	..
	Laksam	..	..	..	..	..	..	..
Noakhali ..	Noakhali (Obsy.)	..	..	..	..	..	..	..
	Feni	..	..	..	..	..	..	..
	Harishpur	..	..	..	..	..	..	..
	Ramganj	..	..	..	..	..	..	..
	Chhagalnaya	..	..	..	..	..	..	..
	Hatiya	..	..	..	..	..	..	..
	Lakhimpur	..	..	..	..	..	..	..
Chittagong Hill Tracts	Rangamati	..	..	..	..	..	..	..
	Bandarban	..	..	..	..	..	..	..
	Barkal	..	..	..	..	..	..	..
	Mahalchari	..	..	..	..	..	..	..
	Lama	..	..	..	..	..	..	..
	Ramgarh	..	..	..	..	..	..	..
	Manikseri	..	..	..	..	..	..	..
	Dighinala	..	..	..	..	..	..	..
	Mainmukh	..	..	..	..	..	..	..
	Kaptai	..	..	..	..	..	..	..
	Panchhari	..	..	..	..	..	..	..
	Nakhyongchhari	..	..	..	..	..	..	..
Tripura State ..	Agartala	..	..	..	..	..	..	..
Cooch Behar ..	Dinhata	..	..	0·04	0·08	..	..	..
	Cooch Behar (Obsy.) ..	..	..	0·28	0·07	..	..	..
	Mickliganj	..	..	0·04	0·17	..	..	..
	Mathabhanga	..	..	0·05	0·10	..	..	..
	Fulbaria (Tufanganj) ..	..	..	0·03	..	..	..	..

*Not reported.

FOR THE MONTH OF JANUARY 1935.

8	9	10	11	12	13	14	15	16	17	18	19	20
..	..	..	..	..	..	..	..	..	..	..	..	..
..	..	..	..	..	..	..	..	0·26	..	..	..	..
..	..	..	..	..	..	..	..	..	..	..	..	..
..	..	..	..	..	..	..	..	..	..	0·05	..	..
..	..	..	..	..	..	..	..	..	..	0·05	..	..
..	..	..	..	..	..	..	..	..	..	0·05	..	..
..	..	..	..	..	..	..	..	..	..	0·08	..	..
..	..	..	..	..	..	..	..	..	..	..	..	..
..	..	..	..	..	..	..	..	..	..	..	..	..
..	..	..	..	..	..	..	..	..	..	0·05	..	..
..	..	..	..	..	..	..	..	..	..	..	..	..
..	..	..	..	..	..	..	..	..	..	0·34	..	..
..	..	..	..	..	..	..	..	..	..	0·25	..	..
..	..	..	..	..	..	..	..	..	0·02	..	..	..
..	..	..	..	..	..	..	..	..	..	..	..	..
..	..	..	..	..	..	..	..	..	..	1·25	..	..
..	..	..	..	..	..	..	..	..	..	0·24	..	..
..	..	..	..	..	..	..	..	..	..	0·59	..	..
..	..	..	..	..	..	..	..	..	..	0·67	..	..
..	..	..	..	..	..	..	..	..	..	..	..	..
..	..	..	..	..	..	..	..	..	..	..	..	..
..	..	..	..	..	..	..	..	..	..	..	..	..
..	..	..	..	..	..	..	..	..	..	..	..	..
..	..	..	..	..	..	..	..	..	..	..	..	..
..	..	..	..	..	..	..	..	..	..	..	..	..
..	..	..	..	..	..	..	..	..	..	..	..	..
..	..	..	..	..	..	..	..	..	..	..	..	..
..	..	..	..	..	..	..	..	..	..	..	..	..
..	..	..	..	..	..	..	..	..	..	..	..	..
..	..	..	..	..	..	..	..	..	..	..	..	..
..	..	..	..	..	..	..	..	..	..	..	..	..
..	..	..	..	..	..	..	..	..	..	..	..	..
..	..	..	..	..	..	..	..	..	..	..	..	..
..	..	..	..	..	..	..	..	..	..	..	..	..
..	..	..	..	..	..	..	..	..	..	..	..	..
..	..	..	..	..	..	..	..	..	..	..	..	..
..	..	..	..	..	..	..	..	..	..	..	..	..
..	..	..	..	..	..	..	..	..	..	..	..	..
..	..	..	..	..	..	..	..	..	..	..	..	..
..	..	..	..	..	..	..	..	..	..	..	..	..
..	..	..	..	..	..	..	..	..	..	..	..	..
..	..	..	..	..	..	..	..	..	..	..	..	..
..	..	..	..	..	..	..	..	..	..	..	..	..
..	..	..	..	..	..	..	..	..	..	..	..	..
..	..	..	..	..	..	..	..	..	..	..	..	..
..	..	..	..	..	..	..	..	..	..	..	..	..
..	..	..	..	..	..	..	..	..	..	..	..	..
..	..	..	..	..	..	..	..	..	..	..	..	..
..	..	..	..	..	..	..	..	..	..	..	..	..
..	..	..	..	..	..	..	..	..	..	..	..	..
..	..	..	..	..	..	..	..	..	..	..	..	..
..	..	..	..	..	..	..	..	..	..	..	..	..
..	..	..	..	..	..	..	..	..	..	..	..	..
..	..	..	..	..	..	..	..	..	..	..	..	..
..	..	..	..	..	..	..	..	..	..	..	..	..
..	..	..	..	..	..	..	..	..	..	..	..	..
..	..	..	..	..	..	..	..	..	..	..	..	..
..	..	..	..	..	..	..	..	..	..	..	..	..
..	..	..	..	..	..	..	..	..	..	..	..	..
..	..	..	..	..	..	..	..	..	..	..	..	..
..	..	..	..	..	..	..	..	..	..	..	..	..
..	..	..	..	..	..	..	..	..	..	..	..	..
..	..	..	..	..	..	..	..	..	..	..	..	..
..	..	..	..	..	..	..	..	..	..	..	..	..
..	..	..	..	..	..	..	..	..	..	..	..	..

DAILY RAINFALL RECORDED IN BENGAL

Division and district.	Station.	21	22	23	24	25	26	27
Dacca—*concld.*								
Mymensingh ..	Kishoreganj ..	..	..	..	..	..	..	..
	Atia (Tangail) ..	..	..	..	..	..	..	..
	Sarisabari ..	..	..	..	..	..	..	..
	Mymensingh (Obsy.)	..	..	..	..	..	..	..
	Jamalpur ..	..	..	..	..	..	..	..
	Netrokona ..	..	..	..	..	..	..	..
	Pingna ..	..	..	..	..	..	..	..
	Durgapur* ..	..						
	Sherpur (Town) ..	..	..	..	..	..	..	..
	Dewanganj ..	..	..	..	..	..	..	..
	Nalitabari ..	..	..	..	..	..	..	..
Faridpur ..	Madaripur ..	..	..	..	..	..	..	..
	Faridpur (Obsy.) ..	..	..	..	..	..	..	..
	Rajbari (Goalundo)	..	..	..	..	..	..	..
	Haridaspur ..	..	..	..	..	..	..	..
	Takerhat ..	..	..	..	..	..	..	..
	Bhanga ..	..	..	..	..	..	..	..
	Pangsa ..	..	..	..	..	..	..	..
	Baliakandi ..	..	..	..	..	..	..	..
	Bhusna ..	..	..	..	..	..	..	..
	Palong* ..	..						
Bakarganj ..	Patuakhali ..	..	..	..	..	..	..	..
	Barguna ..	..	..	..	..	..	..	..
	Pirojpur ..	..	..	..	..	..	..	..
	Barisal (Obsy.) ..	..	..	..	..	..	..	..
	Gaurnadi ..	..	..	..	..	..	..	..
	Bhola ..	..	..	..	..	..	..	..
	Daulatkhan ..	..	..	..	..	..	..	..
	Bauphal ..	..	..	..	..	..	..	..
Chittagong.								
Chittagong ..	Cox's Bazar (Obsy.) ..	..	..	..	..	..	..	..
	Chittagong (Obsy.)	..	..	..	..	..	..	..
	Kutubdia ..	..	..	..	..	..	..	..
	Satkania ..	..	..	..	..	..	..	..
	Mirsarai ..	..	..	..	..	..	..	..
	Rangunia ..	..	..	..	..	..	..	..
Tippera ..	Comilla (Obsy.) ..	..	..	..	..	..	..	..
	Chandpur ..	..	..	..	..	..	..	..
	Brahmanbaria ..	..	..	..	..	..	..	..
	Ramchandrapur ..	..	..	..	..	..	..	..
	Nasirnagar* ..	..						
	Daudkandi ..	..	..	..	..	..	..	..
	Kasba ..	..	..	..	..	..	..	..
	Laksam ..	..	..	..	..	..	..	..
Noakhali ..	Noakhali (Obsy.) ..	..	..	..	..	..	..	..
	Feni ..	..	..	..	..	..	..	..
	Harishpur ..	..	..	..	..	..	..	..
	Ramganj ..	..	..	..	..	..	..	..
	Chhagalnaya ..	..	..	..	..	..	..	..
	Hatiya ..	..	..	..	..	..	..	..
	Lakhimpur ..	..	..	..	..	..	..	..
Chittagong Hill Tracts	Rangamati ..	..	..	..	..	..	..	..
	Bandarban ..	..	..	..	..	..	..	..
	Barkal ..	..	..	..	..	..	..	..
	Mahalchari ..	..	..	..	..	..	..	..
	Lama ..	..	..	..	..	..	..	..
	Ramgarh ..	..	..	..	..	..	..	..
	Manikseri ..	..	..	..	..	..	..	..
	Dighinala ..	..	..	..	..	..	..	..
	Mainmukh ..	..	..	..	..	..	..	..
	Kaptai ..	..	..	..	..	..	..	..
	Panchhari ..	..	..	..	..	..	..	..
	Nakhyongchhari ..	..	..	..	..	..	..	..
Tripura State ..	Agartala ..	..	..	..	..	..	..	..
Cooch Behar ..	Dinhata ..	..	..	..	..	..	..	..
	Cooch Behar (Obsy.)	..	..	..	..	..	..	..
	Mikliganj ..	..	..	..	..	..	..	..
	Mathabhanga ..	..	..	..	..	..	..	..
	Fulbaria (Tufanganj)	..	..	..	..	..	..	..

*Not reported.

Dacca, the 20th February 1935.

FOR THE MONTH OF JANUARY 1935.

28	29	30	31	Number of rainy days.	Average number of rainy days.	Total rainfall for the month.	Normal rainfall for the month.	Heaviest rainfall the during month.	Total rainfall from 1st December 1934 to 31st January 1935.	Normal rainfall from 1st December 1934 to 31st January 1935.
..	..	..	..	Nil	1·0	Nil	0·53	Nil	0·81	0·72
..	..	..	..	1	0·8	0·26	0·39	0·26	1·01	0·49
..	..	..	..	Nil	0·3	Nil	0·17	Nil	Nil	0·43
..	..	..	..	Nil	0·9	0·05	0·33	0·05	1·14	0·40
..	..	..	..	Nil	0·8	0·05	0·37	0·05	0·51	0·50
..	..	..	..	Nil	0·7	0·05	0·29	0·05	0·07	0·41
..	..	..	..	Nil	0·3	0·08	0·09	0·08	0·33	0·14
					0·8		0·35			0·39
..	..	..	..	Nil	0·8	Nil	0·35	Nil	0·45	0·39
..	..	..	..	Nil	0·7	Nil	0·28	Nil	0·40	0·31
..	..	..	..	Nil	0·6	0·05	0·26	0·05	0·23	0·30
..	..	..	..	Nil	0·8	Nil	0·46	Nil	3·13	0·63
..	..	..	..	1	0·9	0·34	0·45	0·34	0·90	0·57
..	..	..	..	1	1·0	0·25	0·39	0·25	0·75	0·51
..	..	..	..	Nil	0·9	0·02	0·27	0·02	1·42	0·49
..	..	..	..	Nil	0·6	Nil	0·21	Nil	1·96	0·49
..	..	..	..	1	0·2	1·25	0·15	1·25	3·38	0·32
..	..	..	..	1	0·5	0·24	0·20	0·24	1·04	0·42
..	..	..	..	1	0·5	0·59	0·24	0·59	1·16	0·67
..	..	..	..	1	0·7	0·67	0·26	0·67	1·40	0·48
					0·8		0·30			0·68
..	..	..	..	Nil	0·9	Nil	0·54	Nil	Nil	0·96
..	..	..	..	Nil	0·3	Nil	0·29	Nil	Nil	0·49
..	..	..	..	Nil	0·9	Nil	0·53	Nil	0·29	0·75
..	..	..	..	Nil	0·7	Nil	0·41	Nil	0·80	0·80
..	..	..	..	Nil	0·7	Nil	0·22	Nil	Nil	0·38
..	..	..	..	Nil	0·8	Nil	0·33	Nil	0·94	0·66
..	..	..	..	Nil	0·7	Nil	0·24	Nil	0·90	0·49
..	..	..	..	Nil	0·7	Nil	0·41	Nil	0·78	0·80
..	..	..	..	Nil	0·3	Nil	0·15	Nil	0·04	0·66
..	..	..	..	Nil	0·5	Nil	0·28	Nil	0 33	0·98
..	..	..	..	Nil	0·3	Nil	0·34	Nil	Nil	0·86
..	..	..	..	Nil	0·4	Nil	0·22	Nil	Nil	0·60
..	..	..	..	Nil	0·4	Nil	0·10	Nil	0·42	0·56
..	..	..	..	Nil	(*n*)	Nil	(*n*)	Nil	0·12	(*n*)
..	..	..	..	Nil	0·8	Nil	0·29	Nil	0·31	0·52
..	..	..	..	Nil	0·9	Nil	0·41	Nil	2·31	0·66
..	..	..	..	Nil	1·0	Nil	0·49	Nil	1·14	0·72
..	..	..	..	Nil	0·5	Nil	0·23	Nil	0·60	0·33
					0·7		0·34			0·50
..	..	..	..	Nil	0·7	Nil	0·36	Nil		0·47
..	..	..	..	Nil	0·6	Nil	0·24	Nil	1·10	0·46
..	..	..	..	Nil	0·7	Nil	0·44	Nil	Nil	0·66
..	..	..	..	Nil	0·6	Nil	0·27	Nil	0·99	0·55
..	..	..	..	Nil	0·7	Nil	0·33	Nil	1·02	0·85
..	..	..	..	Nil	0·6	Nil	0·25	Nil	Nil	0·70
..	..	..	..	Nil	0·7	Nil	0·25	Nil	1·25	0·47
..	..	..	..	Nil	0·4	Nil	0·17	Nil	Nil	0·52
..	..	..	..	Nil	0·4	Nil	0·15	Nil	0·90	0·54
..	..	..	..	Nil	0·6	Nil	0·21	Nil	1·20	0·41
..	..	..	..	Nil	0·6	Nil	0·32	Nil	Nil	0·88
..	..	..	..	Nil	0·3	Nil	0·19	Nil	Nil	0·68
..	..	..	..	Nil	0·4	Nil	0·15	Nil	Nil	0·79
..	..	..	..	Nil	0·3	Nil	0·07	Nil	0·50	0·08
..	..	..	..	Nil	0·3	Nil	0·03	Nil	Nil	0·12
..	..	..	..	Nil	0·3	Nil	0·09	Nil	0·41	0·09
..	..	..	..	Nil	(*n*)	Nil	(*n*)	Nil	0·57	(*n*)
..	..	..	..	Nil	(*n*)	Nil	(*n*)	Nil	0·12	(*n*)
..	..	..	..	Nil	(*n*)	Nil	(*n*)	Nil	0·24	(*n*)
..	..	..	..	Nil	(*n*)	Nil	(*n*)	Nil		(*n*)
..	..	..	..	Nil	(*n*)	Nil	(*n*)	Nil	0·35	(*n*)
..	..	..	..	Nil	(*n*)	Nil	(*n*)	Nil	0·37	(*n*)
..	..	..	..	Nil	0·9	Nil	0·39	Nil	0·44	0·69
..	..	..	..	Nil	1·0	0·12	0·42	0·08	0·12	0·51
..	..	..	..	1	0·5	0·35	0·19	0·28	0·63	0·29
..	..	..	..	1	0·6	0·21	0·28	0·17	0·25	0·40
..	..	..	..	1	0·8	0·15	0·28	0·10	0·15	0·36
..	..	..	..	Nil	0·7	0·03	0·29	0·03	0·06	0·44

(*n*) Not ascertained.

J. C. BASU, for *Director of Agriculture, Bengal.*

IRRIGATION DEPARTMENT.

Statement showing heights above P. W. D. datum and low water in the rivers Ganges, Bhagirathi, Jalangi and Brahmaputra for the month

Date.	River Ganges.													
	Mirzapur. Zero of gauge is 200·00 ft. above P. W. D. datum.		Benares. Zero of gauge is 197·05 ft. above P. W. D. datum.		Buxar.* Zero of gauge is 160·91 ft. above Bengal P. W. D. datum.		Dinapore. Zero of gauge is 185·51 ft. above P. W. D. datum.		Monghyr. Zero of gauge is at P. W. D. datum.		Rajmahal. Zero of gauge is at P. W. D. datum.	
	Distance in miles.	From Allahabad, 86.	From Allahabad, 134.	From Mirzapur, 48.	From Benares, 90.		From Benares, 177.	From Buxar, 87.	From Benares, 287.	From Dinapore, 110.	From Benares, 407.	From Monghyr, 120.		
	Highest gauge reading.	2nd September 1916. 265·97 ft.		2nd September 1916. 244·55 ft.		7th September 1910. 203·40 ft.		21st August 1923. 172·41 ft.		8th September 1901. 129·60 ft.		15th August 1913. 90·37 ft.	
	Lowest gauge reading.	11th April 1878. 198·92 ft.		20th May 1879. 191·70 ft.		15th May 1914. 161·65 ft.		26th April 1902. 136·11 ft.		2nd May 1914. 95·75 ft.		12th May 1916. 55·46 ft.	
		Height above zero of gauge.	Height above P. W. D. datum.	Height above zero of gauge.	Height above P. W. D. datum.	Height above zero of gauge.	Height above P. W. D. datum.	Height above zero of gauge.	Height above P. W. D. datum.	Height above zero of gauge.	Height above P. W. D. datum.	Height above zero of gauge.	Height above P.W.D datum.
1	2	3	4	5	6	7	8	9	10	11	12	13	14
1st ..	..	14·54	214·54	1·67	198·72	6·00	175·91	12·80	148·31	102·30	102·30	61·05	61·05
2nd ..	..	14·50	214·50	1·58	198·63	6·00	175·91	12·80	148·31	102·20	102·20	60·95	60·95
3rd ..	..	14·67	214·67	1·58	198·63	5·92	175·83	12·80	148·31	102·10	102·10	60·90	60·90
4th ..	..	15·00	215·00	1·50	198·55	5·92	175·83	12·80	148·31	102·10	102·10	60·85	60·85
5th ..	..	15·50	215·50	1·50	198·55	5·92	175·83	12·80	148·31	102·00	102·00	60·85	60·85
6th ..	..	15·42	215·42	1·50	198·55	5·83	175·74	12·80	148·31	102·00	102·00	60·80	60·80
7th ..	..	15·38	215·38	1·42	198·47	5·75	175·66	12·80	148·31	101·90	101·90	60·75	60·75
8th ..	..	15·38	215·38	1·42	198·47	5·67	175·58	12·80	148·31	101·90	101·90	60·75	60·75
9th ..	..	15·33	215·33	1·42	198·47	5·67	175·58	12·80	148·31	101·80	101·80	60·75	60·75
10th ..	..	15·25	215·25	1·33	198·38	5·58	175·49	12·80	148·31	101·80	101·80	60·65	60·65
11th ..	..	15·17	215·17	1·33	198·38	5·58	175·49	12·80	148·31	101·80	101·80	60·60	60·60
12th ..	..	15·17	215·17	1·33	198·38	5·50	175·41	12·60	148·11	101·80	101·80	60·65	60·65
13th ..	..	15·12	215·12	1·25	198·30	5·50	175·41	12·60	148·11	101·70	101·70	60·65	60·65
14th ..	..	15·08	215·08	1·25	198·30	5·50	175·41	12·60	148·11	101·70	101·70	60·60	60·60
15th ..	..	15·08	215·08	1·25	198·30	5·50	175·41	12·60	148·11	101·70	101·70	60·55	60·55
16th ..	..	15·08	215·08	1·17	198·22	5·50	175·41	12·60	148·11	101·70	101·70	60·50	60·50
17th ..	..*	15·00	215·00	1·17	198·22	5·50	175·41	12·60	148·11	101·70	101·70	60·50	60·50
18th ..	..	15·00	215·00	1·17	198·22	5·50	175·41	12·60	148·11	101·70	101·70	60·40	60·40
19th ..	..	15·00	215·00	1·08	198·13	5·42	175·33	12·60	148·11	101·60	101·60	60·30	60·30
20th ..	..	14·96	214·96	1·08	198·13	5·42	175·33	12·60	148·11	101·60	101·60	60·25	60·25
21st ..	..	14·96	214·96	1·08	198·13	5·42	175·33	12·60	148·11	101·60	101·60	60·15	60·15
22nd ..	..	14·96	214·96	1·08	198·13	5·42	175·33	12·60	148·11	101·60	101·60	60·10	60·10
23rd ..	..	14·92	214·92	1·08	198·13	5·42	175·33	12·50	148·01	101·60	101·60	60·00	60·00
24th ..	..	14·87	214·87	1·00	198·05	5·33	175·24	12·50	148·01	101·60	101·60	59·95	59·95
25th ..	..	14·83	214·83	1·00	198·05	5·33	175·24	12·50	148·01	101·60	101·60	59·90	59·90
26th ..	..	14·83	214·83	1·00	198·05	5·33	175·24	12·50	148·01	101·60	101·60	59·85	59·85
27th ..	..	14·79	214·79	0·92	197·97	5·33	175·24	12·50	148·01	101·50	101·50	59·80	59·80
28th ..	..	14·75	214·75	0·92	197·97	5·25	175·16	12·50	148·01	101·50	101·50	59·75	59·75
29th ..	..	14·75	214·75	0·83	197·88	5·25	175·16	12·50	148·01	101·50	101·50	59·70	59·70
30th ..	..	14·75	214·75	0·83	197·88	5·25	175·16	12·50	148·01	101·50	101·50	59·65	59·65
31st ..	..	14·71	214·71	0·83	197·88	5·25	175·16	12·50	148·01	101·50	101·50	59·60	59·60
Average level	..	14·99	214·99	1·21	198·26	5·54	175·45	12·64	148·15	101·75	101·75	60·38	60·38

NOTE.—Since the 1st January 1929 the datum of all gauges has been finally altered to refer to the Bengal Public Works Department datum which is 6·25 feet above levels recorded since each gauge was established have been prepared.

*The zero of the Buxar gauge has been checked from the G. T. S. Bench marks Nos. 125 and 126 on line 70K and found to be 160·91 feet above the Bengal

†On and from 1st January 1931, High water level and Low water level readings are shown at Swarupganj.

(A) The value of zero of gauge at the station was 36·84 P. W. D. datum from 1st to 30th January 1935 and 35·23 P. W. D. datum on 31st January 1935.

The 22nd February 1935.

BENGAL.

of January 1935, and the highest reading of each gauge above P. W. D. datum as well as the lowest gauge reading since 1876.

				River Bhagirathi.		River Jalangi.				River Brahmaputra.	
(A) Rampur-Boalia. Zero of gauge is at P. W. D. datum.		Goalundo. Zero of gauge is 1·409 ft. above Bengal P. W. D. datum.		Berhampore. Zero of gauge is at P. W. D. datum.		Swarupganj.† Zero of gauge is at P. W. D. datum.				Gauhati. Zero of gauge is 136·958 ft. above P. W. D. datum.	
From Benares, 471.	From Rajmahal, 64.	From Benares, 591.	From Rampur-Boalia, 120.								
6th August 1879. 62·24 ft.		16th August 1931. 29·60 ft.		14th August 1890. 63·46 ft.		25th September 1900. 35·30 ft.				24th August 1906. 169·25 ft.	
24th April 1931. 32·05 ft.		8th February 1914. 2·41 ft.		26th May 1884. 32·00 ft.		7th May 1896. 2·11 ft.				9th February 1888. 129·23 ft.	
Height above zero of gauge.	Height above P. W. D. datum.	Height above zero of gauge.	Height above P. W. D. datum.	Height above zero of gauge.	Height above P. W. D. datum.	Height above zero of gauge.		Height above P.W.D. datum.		Height above zero of gauge.	Height above P. W. D. datum.
						H. W. L.	L. W. L.	H. W. L.	L. W. L.		
15	16	17	18	19	20	21	22	23	24	25	26
3·00	39·84	12·70	14·109	35·05	35·05	4·69	4·59	4·69	4·59	Below zero. 4·60	132·358
3·00	39·84	12·60	14·009	35·05	35·05	4·65	4·56	4·65	4·56	4·70	132·258
2·90	39·74	12·50	13·909	35·00	35·00	4·71	4·55	4·71	4·55	4·75	132·208
2·90	39·74	12·50	13·909	35·00	35·00	4·88	4·55	4·88	4·55	4·50	132·458
2·80	39·64	12·50	13·909	35·00	35·00	5·06	4·54	5·06	4·54	4·30	132·658
2·70	39·54	12·50	13·909	35·00	35·00	5·51	4·64	5·51	4·64	4·40	132·558
2·65	39·49	12·40	13·809	35·00	35·00	5·94	4·83	5·94	4·83	4·40	132·558
2·60	39·44	12·40	13·809	35·00	35·00	5·84	4·79	5·84	4·79	4·30	132·658
2·55	39·39	12·40	13·809	35·00	35·00	5·76	4·92	5·76	4·92	4·60	132·358
2·50	39·34	12·40	13·809	34·98	34·98	5·28	4·73	5·28	4·79	4·80	132·158
2·45	39·29	12·60	14·009	34·95	34·95	4·85	4·56	4·85	4·56	4·80	132·158
2·40	39·24	12·40	13·809	34·95	34·95	4·61	4·44	4·61	4·44	4·85	132·108
2·35	39·19	12·10	13·509	34·95	34·95	4·48	4·36	4·48	4·36	4·70	132·258
2·30	39·14	11·80	13·209	34·95	34·95	4·43	4·31	4·43	4·31	4·80	132·158
2·30	39·14	11·60	13·009	34·95	34·95	4·44	4·29	4·44	4·29	4·80	132·158
2·25	39·09	11·40	12·809	34·95	34·95	4·40	4·26	4·40	4·26	4·90	132·058
2·25	39·09	11·10	12·509	34·95	34·95	4·44	4·24	4·44	4·24	4·90	132·058
2·25	39·09	11·00	12·409	34·95	34·95	4·45	4·28	4·45	4·28	5·00	131·958
2·20	39·04	10·80	12·209	34·95	34·95	4·52	4·26	4·52	4·26	5·00	131·958
2·20	39·04	10·60	12·009	34·95	34·95	4·61	4·26	4·61	4·26	5·10	131·858
2·20	39·04	10·40	11·809	34·90	34·90	4·63	4·27	4·63	4·27	5·10	131·858
2·15	38·99	10·20	11·609	34·90	34·90	4·77	4·30	4·77	4·30	4·80	132·158
2·10	38·94	10·00	11·409	34·90	34·90	4·88	4·36	4·88	4·36	4·60	132·358
2·05	38·89	9·70	11·109	34·90	34·90	4·87	4·40	4·87	4·40	4·60	132·358
2·00	38·84	9·50	10·909	34·90	34·90	4·80	4·41	4·80	4·41	4·80	132·158
2·00	38·84	9·30	10·709	34·90	34·90	4·72	4·36	4·72	4·36	5·60	131·358
1·95	38·79	9·10	10·509	34·90	34·90	4·48	4·30	4·48	4·30	5·70	131·258
1·95	38·79	8·90	10·309	34·90	34·90	4·36	4·20	4·36	4·20	5·70	131·258
1·95	38·79	8·70	10·109	34·90	34·90	4·26	4·16	4·26	4·16	5·80	131·158
1·90	38·74	8·50	9·909	34·90	34·90	4·20	4·09	4·20	4·09	6·20	130·758
3·30	38·53	8·40	9·809	34·90	34·90	4·19	4·05	4·19	4·05	6·30	130·658
Vide foot-note below.		11·06	12·469	34·95	34·95	4·76	4·41	4·76	4·41	4·95	132·008

the Kidderpore Old Dock Sill. The values of the highest and lowest readings have similarly been altered. Printed notes on the correction to be applied to all reduced P. W. D. datum.

since the average height above zero of gauge is twice shown thus :—from 1st to 30th January 1935—2·36 and on 31st January 1935—3·30.

J. D. WATSON, *Personal Assistant to the Chief Engineer to the Government of Bengal, Irrigation Department.*

Vital statistics of towns with a population of 50,000 and over of the Bengal Presidency for the week ending Saturday, the 16th February 1935.

Districts.	Nos.	Towns.	Population under registration according to Census of 1931.			Births registered.		Deaths registered.																								
			Male.	Female.	Total.	Number registered (excluding still-births).	Still-births registered.	Cholera.	Small-pox.	Plague.	Cerebro-spinal meningitis.	Malaria.	Enteric fever.	Measles.	Relapsing fever.	Kala-azar.	Influenza.	Other fevers.	Dysentery.	Diarrhœa.	Pneumonia.	Phthisis.	Other respiratory diseases.	Injuries including suicide.	Deaths from child-birth.	Other causes.	Total of all causes.			Total of corresponding week of the previous year.		
																											Male.	Female.	Total.	Male.	Female.	Total.
Calcutta ..	1	Calcutta ..	814,948	381,786	1,196,734	508	29	75	17	..	22	10	8	..	..	4	9	27	29	17	61	55	116	18	1	330	440	359	799	467	307	774
Burdwan ..	2	Asansol Mining Settlement.	209,544	173,136	382,680	183	4	3	..	..	..	2	..	..	..	..	..	46	5	1	11	2	12	2	..	53	75	62	137	84	73	157
Howrah ..	3	Howrah ..	145,120	79,753	224,873	127	12	11	2	..	..	2	4	1	..	..	..	5	6	11	24	7	19	2	1	59	84	70	154	60	47	107
Dacca ..	4	Dacca ..	79,365	59,153	138,518	100	5	..	..	..	..	..	1	..	..	2	..	2	1	2	3	1	10	2	2	16	22	20	42	37	29	66
24-Parganas ..	5	Bhatpara ..	60,134	24,841	84,975	45	..	..	..	..	..	1	..	..	..	..	..	8	2	3	4	1	1	..	1	5	14	12	26	12	8	20
Chittagong ..	6	Chittagong ..	35,049	18,107	53,156	39	1	1	..	..	..	..	..	..	..	..	..	7	4	..	2	..	..	..	1	8	10	13	23	6	3	9

Calcutta, the 23rd February 1935.

R. B. KHAMBATA, M.R.C.S. (ENG.), L.R.C.P. (LOND.), D.P.H. (CAMB.), *Director of Public Health, Bengal.*

DISTRICT REPORTS ON WEATHER AND CROPS.

For the week ending on the 20th February 1935.

Summary.—During the week the rainfall was generally light to moderate. It has facilitated the preparation of lands for jute and paddy and has been beneficial to the standing crops. During the week ending Saturday, the 16th February 1935, 3,900 persons attended different relief centres and 842 persons received gratuitous relief in the distressed areas of Murshidabad. In Birbhum and Bankura, 4,666 and 807 persons, respectively, were employed on test relief works on Saturday, the 16th February 1935. The average price of common rice for the province has fallen by about 0·66 per cent. as compared with that of the previous week.

Serial No.	District and sub-division.	Rainfall.	Price of common rice, in seers, per rupee.		Character of the weather, condition of crops, etc.
			This week.	Previous week.	
1	2	3	4	5	6
		Inches.			
1	24-Parganas ..	0·12	10 15/16	10 15/16	Weather seasonable. No damage to crops is reported. Fodder and water are sufficient. Export and import normal. Cattle disease is reported from Barasat police-station.
	Diamond Harbour	0·03	14	14	
	Barrackpore ..	Nil	10	10	
	Baraset ..	0·30	10	10	
	Basirhat ..	0·20	12½	12½	
2	Nadia ..	0·77	10	10	Weather seasonable. Import and export of rice normal. Harvesting of sugarcane is almost finished. Prospects of standing crops are fair. Fodder and water are sufficient. Cattle disease is reported from Chuadanga subdivision.
	Kushtia ..	0·32	11½	11½	
	Meherpur ..	1·21	11	11	
	Chuadanga ..	0·15	11	11	
	Ranaghat ..	0·30	9½	9½	
3	Murshidabad ..	0·08	10	10	Weather occasionally cloudy. Prospects of standing crops are not favourable in Kandi subdivision. Fodder is not sufficient in parts of Sadar subdivision. No large export or import. Cattle-disease is reported from Kandi and Jangipur subdivisions. Test relief works continue. 3,396 men, 391 women and 113 children attended relief centres during the week ending Saturday, the 16th February 1935. Number of persons receiving gratuitous relief in the distressed areas was 183, 385 and 274 in Lalbagh, Kandi and Jangipur subdivisions, respectively.
	Lalbagh ..	Nil	11	11½	
	Jangipur ..	0·27	11½	11½	
	Kandi ..	0·04	11½	11½	
4	Jessore ..	0·46	11	11	Weather seasonable. Prospects of standing crops are fair. No large export or import. Fodder and water are sufficient.
	Jhenidah ..	Nil	13	13	
	Magura ..	0·50	12	12	
	Narail ..	1·60	13	13	
	Bongaon ..	0·05	10	10	
5	Khulna ..	Nil	11	11	Weather seasonable. Its effects on crops are fair. Fodder and water are sufficient.
	Satkhira ..	Nil	12½	12½	
	Bagerhat ..	0·30	12	12	

Serial No.	District and sub-division.	Rainfall.	Price of common rice, in seers, per rupee.		Character of the weather, condition of crops, etc.
			This week.	Previous week.	
1	2	3	4	5	6
		Inches.			
6	Burdwan ..	0·13	10½	10	Weather seasonable. Condition of crops is not satisfactory. Fodder and water are sufficient.
	Asansol ..	Nil	10½	10½	
	Katwa ..	0·40	11½	11	
	Kalna ..	0·35	10	9½	
7	Birbhum ..	0·24	12½	12½	Weather seasonable. Prospects of standing crops are fair. Fodder and water are sufficient. 4,666 men were employed on test relief works on Saturday, the 16th February 1935.
	Rampurhat ..	1·60	11	11	
8	Bankura ..	0·00	11	11	Weather seasonable. Stock of rice is sufficient. Pressing of sugarcane is going on. No large export or import. Prospects of standing crops are fair. Cattle disease is reported from Chhatna and Vishnupur police stations. 807 persons were employed on test relief works on Saturday, the 16th February 1935.
	Vishnupur ..	0·00	10½	11½	
9	Midnapore ..	Nil	13	9½	Weather seasonable. Stock of rice and fodder and water are sufficient.
	Contai ..	Nil	15	13	
	Tamluk ..	Nil	11½	11½	
	Ghatal ..	0·21	12½	11½	
	Jhargram ..	Nil	11	11	
10	Hooghly ..	0·37	10	10	Weather seasonable. Fodder and water are sufficient.
	Serampore ..	0·30	10	10	
	Arambagh ..	1·30	11½	11½	
11	Howrah ..	0·04	10	10	Weather seasonable; its effects are favourable. Fodder and water are sufficient.
	Uluberia ..	0·28	11½	11½	
12	Rajshahi (Rampur Boalia).	0·00	12½	11½	Weather seasonable and favourable to the crops. Harvesting of winter rice is nearing completion and that of sugarcane and oilseeds are still going on. Lands are now being prepared for sugarcane, jute and *bhadoi* paddy. Fodder and water are sufficient. Cattle disease is reported from Singra police-station.
	Naogaon ..	0·27	12½	(a)	
	Nator ..	0·25	11½	11½	
13	Dinajpur ..	0·01	12½	12	Weather seasonable. Its effect on agricultural operation is favourable. Fodder and water are sufficient.
	Thakurgaon ..	Nil	13	15	
	Balurghat ..	0·35	13½	15	
14	Jalpaiguri ..	0·87	13	12	Sky cloudy. Fodder and water are sufficient.
	Alipur ..	1·35	13	12	

(a) Not reported.

Serial No.	District and sub-division.	Rainfall.	Price of common rice, in seers, per rupee.		Character of the weather, condition of crops, etc.
			This week.	Previous week.	
1	2	3	4	5	6
		Inches.			
15	Darjeeling ..	Nil	8	8	Weather cold. Fodder and water are sufficient. Cattle-disease exists at places.
	Kurseong ..	0·07	7½	(*n*)	
	Siliguri ..	0·69	13	13½	
	Kalimpong ..	Nil	8	8	
16	Rangpur ..	(*n*)	11	11	Weather seasonable. Prospects of standing crops are fair. Lands are under cultivation for *aus* crops. Fodder and water are sufficient.
	Nilphamari ..	Nil	12	(*n*)	
	Kurigram ..	0·28	13	13	
	Gaibandha ..	0·14	12	(*n*)	
17	Bogra ..	0·22	14	14	Weather seasonable. Condition of standing crops is fair. Fodder and water are sufficient. Cattle-disease is reported from Jaipurhat police-station.
18	Pabna ..	0·23	10½	10½	Sky lightly cloudy at first and then fair. Condition of standing crops is good. Fodder and water are sufficient.
	Serajganj ..	0·21	11	10	
19	Malda ..	0·20	12½	12½	Weather seasonable and occasionally cloudy. Prospects of standing crops are fair. Fodder and water are available. Cattle-disease is reported from Bamongola thana.
20	Cooch-Behar ..	Nil	14 1/16	14 1/16	Weather seasonable. Preparation of lands for jute and autumn paddy and harvesting of mustard seeds continue. Cutting of tobacco leaves has commenced in Mekliganj subdivision. Prospects and condition of standing crops are fair. Fodder and water are sufficient. Cattle-disease is reported from Mekliganj police-station.
21	Dacca ..	0·36	11	11	Rainfall at North Sadar (Kapasia) (*n*). Weather seasonable and its effects on the crops are fair. Prospects of crops are fair. Fodder and water are available. Cattle-disease exists in Manikganj subdivision.
	Manikganj ..	Nil	11	11½	
	Narayanganj ..	0·17	11½	10½	
	Munshiganj ..	Nil	11½	11½	

(*n*) Not reported.

Serial No.	District and subdivision.	Rainfall.	Price of common rice, in seers, per rupee.		Character of the weather, condition of crops, etc.
			This week.	Previous week.	
1	2	3	4	5	6
		Inches.			
22	Mymensingh ..	0·13	10½	10½	Weather seasonable. Condition of crops is fair. Lands are being prepared for sowing of paddy and jute. No import or export. Fodder and water are available.
	Jamalpur ..	0·34	11 7/16	11 7/16	
	Tangail ..	0·10	11	10½	
	Netrakona ..	0·55	12	12	
	Kishorganj ..	0·44	10½	10½	
23	Faridpur ..	0·16	12½	12½	Weather seasonable. Condition of standing crops is fair. Fodder and water are sufficient.
	Goalundo (Rajbari).	0·06	10	10	
	Madaripur ..	0·00	13	13	
	Gopalganj (a) ..	0·00	13	13	
24	Bakarganj (Barisal).	0·72	13	13	Weather seasonable. Prospects of standing crops are good. Fodder and water are sufficient.
	Pirojpur ..	1·90	11½	11½	
	Patuakhali ..	0·28	11	11	
	Dakshin Shabazpur (Bhola).	0·05	12	12	
25	Chittagong ..	0·65	12 13*	12 13*	Weather seasonable. Condition of standing *rabi* crop is favourable. Fodder and water are sufficient. Panga salt sells at 12 seers per rupee both at Sadar and Cox's Bazar.
	Cox's Bazar ..	Nil	13	13	
26	Tippera (Comilla)	0·84	13	13	Prospects of crops are fair.
	Brahmanbaria ..	1·19	11	11	
	Chandpur ..	0·10	13 1/16	13 1/16	
27	Noakhali ..	0·39	13	13	Weather seasonable. Recent rainfall though not sufficient is much beneficial to the standing crops. Condition is fair. Fodder and water are sufficient.
	Feni ..	0·02	13½	13½	
28	Chittagong Hill Tracts.	0·18	17	17	Weather cloudy. Its effects on agricultural operations are favourable. Fodder and water are sufficient.
29	Tripura State ..	0·68	12¼	12¼	Weather rainy. Condition of cattle is good. Fodder and water are sufficient. Harvesting of *til* and cotton is nearly complete and that of *rabi* crops is going on. Preparation of lands for sowing *aus* paddy and jute has begun. Cotton sells at Rs. 8 to Rs. 15 and jute at Rs. 2-8 to Rs. 4-4 per maund.

(a) The rainfall at Haridaspur, which is very near to Gopalganj, is shown here.

* Burma rice.

J. C. BASU, for *Director of Agriculture, Bengal.*

Dacca, the 25th February 1935.

Wholesale prices-current of food grains, gur, etc., in the undermentioned marts of Bengal for the first half of February 1935.

Marts.	Paddy local (best quality).			Paddy local (common quality).			Rice local (best quality).		
	Present return.	Next preceding return.	Corresponding return of last year.	Present return.	Next preceding return.	Corresponding return of last year.	Present return.	Next preceding return.	Corresponding return of last year.
1	2	3	4	5	6	7	8	9	10
	Rs. a. p.	Rs. a. p.	Rs. a. p.	Rs. a. p.	Rs. a. p.	Rs. a. p.	Rs. a. p.	Rs. a. p.	Rs. a. p.
Calcutta	2 8 0	2 4 0	2 4 0	2 4 0	2 2 0	2 0 0	5 12 0	5 12 0	5 8 0
Burdwan	2 0 0	2 2 0	1 9 0	1 14 0	2 0 0	1 6 0	4 8 0	4 10 0	3 8 0
Midnapore	2 5 0	2 5 0	1 8 0	1 15 0	1 15 0	1 6 0	4 4 0	4 4 0	3 4 0
Chittagong	1 12 0	1 10 0	1 8 0	1 8 0	1 6 0	1 5 0	4 10 0	4 8 0	4 8 0
Dacca	2 1 0	2 2 0	2 0 0	1 13 0	1 14 0	1 14 0	3 14 0	4 2 0	3 12 0
Pabna	2 0 0	2 0 0	2 0 0	1 14 0	1 14 0	1 13 0	4 8 0	4 8 0	3 8 0
Rangpur	1 12 0	1 12 0	2 4 0	1 8 0	1 8 0	1 14 0	4 2 0	4 6 0	5 0 0
Serajganj (Pabna)	..	..	..	..	..	..	..	..	..
Sarisabari (Mymensingh)	..	..	..	..	..	..	..	..	..
Narayanganj (Dacca)	..	..	..	..	..	..	..	..	..

Marts.	Rice local (common quality).			Wheat.			Raw cotton.		
	Present return.	Next preceding return.	Corresponding return of last year.	Present return.	Next preceding return.	Corresponding return of last year.	Present return.	Next preceding return.	Corresponding return of last year.
	11	12	13	14	15	16	17	18	19
	Rs. a. p.	Rs. a. p.	Rs. a. p.	Rs. a. p.	Rs. a. p.	Rs. a. p.	Rs. a. p.	Rs. a. p.	Rs. a. p.
Calcutta	4 8 0	4 12 0	4 0 0	3 7 0	3 7 0	3 4 0	16 12 0	17 12 0	15 8 0
Burdwan	3 8 0	3 10 0	2 12 0	..	..	..	..	..	..
Midnapore	3 8 6	3 8 6	2 4 0	..	..	..	..	..	..
Chittagong	3 8 0	3 7 0	3 8 0	..	..	..	..	..	..
Dacca	3 2 0	3 2 0	3 5 0	..	..	..	..	..	..
Pabna	3 2 0	3 2 0	3 4 0	..	..	..	..	..	..
Rangpur	3 4 0	3 8 0	3 8 0	..	..	..	..	..	..
Serajganj (Pabna)	..	..	..	..	..	..	..	..	..
Sarisabari (Mymensingh)	..	..	..	..	..	..	..	..	..
Narayanganj (Dacca)	..	..	..	..	..	..	..	..	..

Marts.	Coal.			Raw jute (weighted average).			*Gur* (sugarcane).		
	Present return.	Next preceding return.	Corresponding return of last year.	Present return.	Next preceding return.	Corresponding return of last year.	Present return.	Next preceding return.	Corresponding return of last year.
	20	21	22	23	24	25	26	27	28
	Rs. a. p.	Rs. a. p.	Rs. a. p.	Rs. a. p.	Rs. a. p.	Rs. a. p.	Rs. a. p.	Rs. p. a.	Rs. a. p.
Calcutta	0 6 6	0 6 6	0 6 6	5 1 0	5 3 0	4 6 6	4 8 0	4 8 0	4 4 0
Burdwan	..	..	..	..	..	..	5 0 0	5 0 0	4 0 0
Midnapore	..	..	..	..	..	..	4 8 0	4 8 0	3 6 0
Chittagong	..	..	..	..	..	..	7 12 0	7 12 0	5 0 0
Dacca	..	..	..	..	..	..	4 12 0	4 12 0	4 12 0
Pabna	..	..	..	..	..	..	4 0 0	4 0 0	3 6 0
Rangpur	..	..	..	..	..	..	4 2 0 to 5 0 0	4 2 0 to 5 0 0	3 4 0 to 4 0 0
Serajganj (Pabna)	..	..	..	4 2 0	4 4 0	3 11 6	..	..	..
Sarisabari (Mymensingh)	..	..	..	3 12 0 to 5 12 0	3 13 0 to 5 13 0	3 5 0 to 4 10 0	..	..	..
Narayanganj (Dacca)	..	..	..	4 0 0 to 4 12 0	4 0 0 to 5 0 0	3 9 0 to 4 2 0	..	..	..

Dacca, the 23rd February 1935.

J. C. BASU, for *Director of Agriculture, Bengal.*

Prices-current (retail) of common rice and salt in the districts of Bengal for the first half of February 1935.

Districts and Marts.	Quantity per rupee in seers of eighty tolas.								
	Common rice.						Salt.		
	Average.			Cheapest.					
	Present return.	Next preceding return.	Corresponding return of last year.	Present return.	Next preceding return.	Corresponding return of last year.	Present return.	Next preceding return.	Corresponding return of last year.
	S. Ch.	S. Ch.	S. Ch.	S. Ch.	S. Ch.	S. Ch.	S. Ch.	S. Ch.	S. Ch.
Presidency Division.									
24-Parganas—									
1 Chetla Hat ..	10 15	10 11	13 5	12 13	12 5	14 6	17 13	16 0	17 0
2 Mogra Hat ..	12 5	11 7	14 8	13 5	13 5	16 0	16 0	16 0	16 0
3 Calcutta-Beliaghata	8 12	8 8	9 10	11 8	11 8	11 7	16 0	16 0	13 0
Nadia—									
4 Goari	10 0	10 4	13 0	13 0	13 0	13 8	14 0†	14 0†	13 0†
5 Ranaghat ..	9 4	10 0	13 0	12 8	13 0	(*n*)	14 0†	14 0†	13 0†
Murshidabad—									
6 Berhampore ..	10 0	10 0	15 8	11 0	11 0	16 8	14 0*	14 0*	14 0*
7 Kandi	12 0	13 0	16 8	12 8	13 8	17 8	14 0	14 0	14 8
8 Jangipur ..	11 0	11 8	15 0	11 8	12 0	16 0	15 0	15 0	15 0
Jessore—									
9 Sadar	12 0	11 0	13 0	14 0	13 0	14 8	15 0†	14 0†	14 0* 15 0
10 Bongaon ..	10 0	10 0	11 0	12 8	12 8	13 0	14 8 13 0*	14 8 13 0*	13 8 12 8*
Khulna—									
11 Sadar	12 4	12 4	11 4	13 0	13 0	14 0	13 0†	16 0 15 0*	13 0†
12 Bagerhat ..	12 0	12 8	11 8	12 8	13 8	13 0	14 0	14 0	13 8
Burdwan Division.									
Burdwan—									
13 Sadar	10 0	10 8	11 8	11 0	11 8	14 0	14 0†	14 0†	13 8 16 0*
14 Kalna	10 0	9 0	10 6	11 0	10 0	13 4	16 0†	15 0†	16 0
Birbhum—									
15 Suri	10 0	11 0	15 0	11 4	11 8	16 0	14 0	14 0	14 0
16 Rampurhat ..	11 0	11 0	16 0	12 0	12 0	16 8	16 0	16 0	16 0
Bankura—									
17 Sadar	12 0	11 0	14 8	13 0	12 0	15 8	14 0	14 0	14 0†
18 Vishnupur ..	10 8	10 8	16 4	11 8	11 4	17 8	13 0	13 0	13 0

* Karkach. (*n*) Not reported.

N.B.—The prices of Karkach and Liverpool salt tally with each other in marts marked †.

Prices-current (retail) of common rice and salt in the districts of Bengal for the first half of February 1935.

Districts and Marts.	Quantity per rupee in seers of eighty tolas.								
	Common rice.						Salt.		
	Average.			Cheapest.					
	Present return.	Next preceding return.	Corresponding return of last year.	Present return.	Next preceding return.	Corresponding return of last year.	Present return.	Next preceding return.	Corresponding return of last year.
	S. Ch.	S. Ch.	S. Ch.	S. Ch.	S. Ch.	S. Ch.	S. Ch.	S. Ch.	S. Ch.
BURDWAN DIVISION—*concld.*									
Midnapore—									
19 Sadar	9 10	9 10	15 0	11 11	11 11	16 0	14 0	14 0	15 0
20 Contai	13 0	14 0	16 0	15 0	16 0	18 0	10 8	12 0	32 0
Hooghly—									
21 Sadar	10 0	10 8	12 12	11 8	12 0	15 12	15 0	15 0	12 0
22 Arambagh ..	11 8	13 0	16 0	12 4	13 8	17 0	14 0 13 8*	14 0 13 12*	15 0 14 8*
Howrah—									
23 Sadar	11 0	11 0	13 8	12 0	12 0	14 8	16 0	16 0	16 0
24 Uluberia ..	11 8	11 8	12 0	13 8	13 0	14 0	16 0	16 0	16 0
RAJSHAHI DIVISION.									
Rajshahi—									
25 Rampur-Boalia ..	12 0	12 0	12 0	12 8	12 8	14 8	13 4†	13 4†	13 8 13 0*
26 Nator	11 4	11 4	(*n*)	12 0	12 12	13 8	12 0†	12 0†	12 0†
27 Dinajpur—Railbazar Hat.	12 8	12 0	15 2	13 12	13 0	16 5	13 0†	13 0†	13 0†
28 Jalpaiguri—Sadar ..	12 0	12 0	12 0	14 0	14 0	14 0	13 0	13 0	13 0
Darjeeling—									
29 Sadar	9 8	9 0	9 0	10 0	10 0	11 0	10 8 10 0*	10 0†	10 0 8 0*
30 Siliguri ..	12 0	12 0	12 0	13 8	13 8	13 8	12 0†	12 0†	12 0†
Rangpur—									
31 Sadar	12 15	11 13	14 10	12 15	11 13	14 10	13 0	13 0	12 8
32 Nilphamari ..	10 0	(*n*)	10 0	10 8 (*a*) 12 0	(*n*)	13 0	12 8	(*n*)	12 8*
33 Bogra—Sadar ..	13 6	13 6	9 12	13 14	13 14	13 14	14 2	14 2	12 0
Pabna—									
34 Sadar	10 0	9 8	12 0	11 8	11 8	13 0	13 0†	14 8†	13 8†
35 Serajganj ..	11 0	11 0	11 8	11 8	11 12	12 12	16 0 15 0*	16 0 15 0*	16 0 15 0*
Malda—									
36 Sadar	12 0	11 8	13 0	13 0	14 0	14 0	14 8 14 0*	14 8 14 0*	14 0†
37 Balia—Nawabganj	12 8	12 8	16 0	13 0	15 0	18 0	14 12 14 0*	14 8 14 0*	14 8 14 0*

*Karkach. (*n*) Not reported.

N. B.—The prices of Karkach and Liverpool salt tally with each other in marts marked †.

(*a*) (New).

Prices-current (retail) of common rice and salt in the districts of Bengal for the first half of February 1935.

Districts and Marts.	Quantity per rupee in seers of eighty tolas.								
	Common rice.						Salt.		
	Average.			Cheapest.					
	Present return.	Next preceding return.	Corresponding return of last year.	Present return.	Next preceding return.	Corresponding return of last year.	Present return.	Next preceding return.	Corresponding return of last year.
	S. Ch.	S. Ch.	S. Ch.	S. Ch.	S. Ch.	S. Ch.	S. Ch.	S. Ch.	S. Ch.
Dacca Division.									
Dacca—									
38 Sadar	12 0	11 8	12 0	13 0	13 0	13 12	13 8†	13 4†	13 5 14 0*
39 Mirkadim ..	11 8	11 8	12 8	12 8	12 0	(n)	15 0*	15 0*	13 8*
Mymensingh—									
40 Nasirabad ..	12 0	12 0	10 8	13 0	13 4	12 8	12 0*	12 8*	12 0*
41 Netrakona ..	12 8	12 0	(n)	13 4	13 0	11 0	13 4 12 8*	13 0 12 0*	14 8 12 8*
Faridpur—									
42 Sadar ..	12 8	13 0	11 0	15 0	16 0	12 0	12 0	12 0	12 8
43 Rajbari ..	10 0	10 0	12 0	12 0	12 0	14 0	12 0	12 0	12 0
Bakarganj—									
44 Barisal ..	12 0	12 0	12 0	13 0	13 0	13 0	16 0 15 0*	16 0 15 0*	15 0 14 0*
45 Pirojpur ..	11 8	11 8	12 8	11 10	11 10	12 12	11 0†	11 0†	11 0†
Chittagong Division.									
Tippera—									
46 Comilla ..	12 5	12 5	11 7	13 5	13 5	12 5	12 13 10 10*	12 13 10 10*	12 13 10 10*
47 Chandpur ..	12 8	12 8	12 8	13 5	13 5	13 5	13 5	(n)	13 5
Noakhali—									
48 Kalitara Hat ..	9 8	10 0	11 0	13 0	11 0	12 0	13 0 10 0*	13 0 9 0*	13 8 11 0*
49 Feni Hat ..	12 12	12 12	13 8	14 0	14 0	14 0	13 0 10 0*	14 0 10 0*	14 0 10 0*
Chittagong—									
50 Sadar	11 0	11 8	10 0	12 0	13 0	13 8	11 0	12 0	16 0
51 Cox's Bazar ..	11 0	12 8	13 8	12 0	13 8	14 8	11 0	13 0	13 0
52 Chittagong Hill Tracts —Rangamati ..	14 0	14 0	14 0	17 0	17 0	18 0	13 0 8 0*	13 0 8 0*	6 8* 13 0

* Karkach. (n) Not reported.

N. B.—The prices of Karkach and Liverpool salt tally with each other in marts marked †.

Dacca, the 23rd February 1935. J. C. Basu, for *Director of Agriculture, Bengal.*

Statement of weekly gauge readings on the river Ganges at Rampur Boalia for the week ending the 16th February 1935.

Date.	Hour.	Height of surface above P. W. D. datum.	Height of surface above P. W. D. datum on the same date last year.	Remarks.
1935.				Zero of gauge referred to B. M. on Rajshahi College step ; value 64·73.
10th February	7 a.m.	38·43	37·83	
11th „	7 „	38·33	37·83	Value of 0 of the gauge =35·23 P. W. D.
12th „	7 „	38·28	37·73	
13th „	7 „	38·15	37·73	
14th „	7 „	38·15	37·63	
15th „	7 „	38·05	37·63	Value of 0 of the gauge =34·55 P. W. D.
16th „	7 „	38·05	37·53	

Highest recorded level on 26-8-1879=64·24.
Lowest recorded level on 24-4-1931=32·05.

J. MACKIE, *Subdivisional Officer,*
Irrigation Department, Rajshahi.

Rampur Boalia, the 22nd February 1935.

Statement showing the gauge readings at Dacca Waterworks Station on the river Buriganga for the week ending 16th February 1935.

Date.	At highest water.		At lowest water.		Commencement of—		Remarks.	
	Time.	Reading.	Time.	Reading.	Ebb tide.	Flow tide.	7 a.m.	5 p.m.
1935.								
10th February ..	17-0	5·1	11-0	3·5	17-12	11-8	4·2	5·1
11th „ ..	..	..	11-50	3·2	..	12-0	4·1	4·3
12th „ ..	6-30	4·3	12-40	2·7	6-37	12-50	4·2	3·6
13th „ ..	7-20	3·7	13-30	2·1	7-30	13-40	3·6	2·65
14th „ ..	8-10	3·4	14-20	1·8	8-20	14-30	3·25	2·5
15th „ ..	9-5	3·3	15-10	1·7	9-12	15-20	3·0	2·2
16th „ ..	9-55	3·7	16-0	2·1	10-6	16-10	3·0	2·35

B. M. on settling tank 39·49 O. M. S. L. Zero is at O. M. S. L.

Notable high and low water-levels of previous years.

	Taken at high tide.			Taken at low tide.	
27th August	1906 ..	70·5	23rd February	1907 ..	51·06
5th September.	1909 ..	66·86	13th „	1908 ..	51·06
10th August	1910 ..	69·86	12th March	1912 ..	51·06
1st „	1911 ..	68·46	6th „	1914 ..	50·60
13th „	1912 ..	67·16	22nd February	1915 ..	50·30
31st „	1915 ..	69·7	15th „	1916 ..	50·60
8th „	1916 ..	68·1	3rd March	1917 ..	51·0
12th „	1917 ..	67·1	21st February	1918 ..	51·40
13th „	1918 ..	69·12	26th „	1919 ..	50·4
2nd „	1919 ..	66·8	18th „	1920 ..	50·9
8th September	1920 ..	66·9	19th „	1921 ..	50·9
28th July	1921 ..	68·4	8th March	1922 ..	51·05
10th August	1922 ..	68·00	14th „	1923 ..	50·8
31st July	1923 ..	66·15	16th February	1924 ..	50·50
29th August	1924 ..	68·82	5th March	1925 ..	50·9
8th September	1925 ..	68·52	9th February	1926 ..	2·2
15th August	1926 ..	19·6	27th „	1927 ..	2·10
17th September	1927 ..	18·70	16th „	1928 ..	2·2
22nd August	1928 ..	20·0	21st „	1929 ..	2·0
13th July	1929 ..	17·8	24th „	1930 ..	2·3
12th September	1930 ..	18·65	28th „	1931 ..	2·2
16th August	1931 ..	21·7	18th „	1932 ..	1·8
6th September	1932 ..	18·5	6th „	1933 ..	2·10
7th „	1933 ..	17·80	26th March	1934 ..	2·40
23rd August	1934 ..	19·35			

N.B.—Zero of the gauge at Dacca Waterworks prior to 11 a.m. on the 8th January 1926= —48·51 with reference to P. W. D. datum.

Zero of the gauge at Dacca Waterworks since 11 a.m. of the 8th January 1926=0·00 with reference to P. W. D. datum.

[ILLEGIBLE], *for Executive Engineer,*
Khulna Division.

Khulna, the 22nd February 1935.

Printed and published by the Superintendent, Government Printing, Bengal Government Press, Alipore, Bengal, on the 28th February 1935.

Registered No. C207

No. 10 of 1935

The Calcutta Gazette

Published by Authority

THURSDAY, MARCH 7, 1935.

CONTENTS:

	Page.
Part I.—Orders and Notifications by the Governor of Bengal, the Government of Bengal, the High Court, Government Treasury, etc.	459—519
Part IA.—Orders and Notifications by the Government of India republished for general information	31—34
Part IB.—Educational Notices ..	355—358
Part II.—Advertisements	205—288
Part III.—Acts of the Bengal Legislative Council—	
The Calcutta Municipal (Amendment) Act, 1934	5
Part IV.—Bills introduced in the Bengal Legislative Council, Reports of Select Committees presented or to be presented to that Council, and Bills published before introduction in that Council ..	*Nil*
Part V.—Acts of the Indian Legislature assented to by the Governor-General and Ordinances promulgated under section 72 of the Government of India Act ..	*Nil*
Part VI.—Bills introduced in the Council of State and Legislative Assembly, Reports of Select Committees presented to the Council and Assembly and Bills published under rule 18 of the Indian Legislative Rules—	
The Code of Criminal Procedure (Amendment) Bill, 1935, with Statement of Objects and Reasons	9—10
The Code of Criminal Procedure (Amendment) Bill, 1935, with Statement of Objects and Reasons	11
The Code of Criminal Procedure (Amendment) Bill, 1935, with Statement of Objects and Reasons	12
The Payment of Wages Bill, 1935, with Statement of Objects and Reasons and Notes on Clauses	13—20
The Code of Civil Procedure (Amendment) Bill, 1935, with Statement of Objects and Reasons	21—22
The Code of Civil Procedure (Second Amendment) Bill, 1935, with Statement of Objects and Reasons ..	23—24
Appendix.—List of Common and Special Jurors for the year 1935, district 24-Parganas	1—145
Supplement No. 10 :—	
Second Forecast of the Wheat Crop of Bengal, 1934-35	327—328
Second Forecast of the Spring Oilseed Crops of Bengal, 1934-35 ..	329—332
Cotton Ginning and Pressing—Statement of Accounts for the year 1934 of the Sinking Funds of the Calcutta Improvement Trust—Weekly Vital Statistics—Weekly Weather and Crop Report—Weekly gauge readings ..	333—341
Resolution on the Annual Administration Report of the Department of Industries, Bengal, for the year 1933-34 ..	342—343
Resolution on the final report on the floods and relief operations in the district of Rajshahi during the year 1934	344

PART I

Orders and Notifications by the Governor of Bengal, the Government of Bengal, the High Court, Government Treasury, etc.

Orders by His Excellency the Governor of Bengal.

No. 2170A.—1st March 1935.—Under the provisions of section 93 of the Government of India Act, His Excellency the Governor is pleased to accept the resignation tendered by Mr. C. K. Nicholl of his office of member of the Bengal Legislative Council.

No. 2173A.—1st March 1935.—Whereas a vacancy has occurred in the Indian Tea Association constituency of the Bengal Legislative Council by reason of the resignation by

Mr. C. K. Nicholl, His Excellency the Governor is pleased, in pursuance of sub-rule (*1*) of rule 26 of the Bengal Electoral Rules, to call upon the said constituency to elect a person for the purpose of filling the vacancy by the 25th March 1935.

No. 2177A.—1st March 1935.—Under the provisions of section 93 of the Government of India Act, His Excellency the Governor is pleased to accept the resignation tendered by Lieutenant-Colonel T. C. Boyd, I.M.S., of his office of member, Bengal Legislative Council.

E. N. BLANDY,

Chief Secy. to the Govt. of Bengal (offg.).

Orders by the Government of Bengal.

No. 2310A.

Appointments and Transfers.

GENERAL.

Dinajpur-Jalpaiguri-Darjeeling-Rajshahi.—No. 2210A.—19th February 1935.—Mr. S. S. R. Hattiangadi, I.C.S., officiating District and Sessions Judge, Dinajpur, Jalpaiguri and Darjeeling, is appointed to have charge of the Naogaon subdivision of the Rajshahi district.

Pabna-Bogra-Bakarganj.—No. 1949A.—25th February 1935.—Mr. Birendra Kumar Basu, I.C.S., District and Sessions Judge, Pabna and Bogra, is appointed to be District and Sessions Judge, Bakarganj

Calcutta.—No. 1991A.—26th February 1935.—Mr. T. J. Y. Roxburgh, C.I.E., I.C.S., is appointed temporarily to act as Secretary to the Government of Bengal in the Judicial Department and as Superintendent and Remembrancer of Legal Affairs, Bengal.

Midnapore.—No. 1995A.—26th February 1935.—Mr. Sudhansu Kumar Haldar, I.C.S., officiating Additional District and Sessions Judge, Midnapore, is appointed temporarily to act, in addition to his own duties, as District and Sessions Judge of that district.

Burdwan-Mymensingh.—No. 2039A.—27th February 1935.—Babu Upendra Chandra Datta, Deputy Magistrate and Deputy Collector, Kalna, is appointed to have charge of the Jamalpur subdivision of the Mymensingh district.

Pabna-Burdwan.—No. 2043A.—27th February 1935.—Babu Kalidas Bagchi, Deputy Magistrate and Deputy Collector, Pabna, is appointed to have charge of the Kalna subdivision of the Burdwan district.

Rangpur-Pabna.—No. 2047A.—27th February 1935.—Maulvi Tauhiduddin Ahmad, Deputy Magistrate and Deputy Collector, Rangpur, is transferred to the headquarters station of the Pabna district.

Dinajpur.—No. 2050A.—27th February 1935.—Babu Mangal Kumar Acharji, Deputy Magistrate and Deputy Collector, Dinajpur, is appointed to have charge of the Sadar subdivision of that district.

Mymensingh-Dinajpur.—No. 2052A.—27th February 1935.—Babu Abinash Chandra Banarji, Deputy Magistrate and Deputy Collector, Mymensingh, is transferred to the headquarters station of the Dinajpur district.

Dinajpur-Bogra.—No. 2056A.—27th February 1935.—Maulvi Naziruddin Ahmad, Deputy Magistrate and Deputy Collector, on probation, Dinajpur, is transferred to the headquarters station of the Bogra district.

Bogra-Mymensingh.—No. 2059A.—27th February 1935.—Maulvi Muhammad Ibrahim, Sub-Deputy Collector, Bogra, is transferred to the headquarters station of the Mymensingh district.

Rajshahi.—No. 2063A.—27th February 1935.—Rai Sahib Rajendra Lal Acharji, Sub-Deputy Collector, on leave, is posted to the headquarters station of the Rajshahi district.

Rajshahi-Hooghly.—No. 2067A.—27th February 1935.—Babu Kali Charan Mukharji, Sub-Deputy Collector, Rajshahi, is transferred to the headquarters station of the Hooghly district.

Faridpur-Pabna.—No. 2071A.—27th February 1935.—Maulvi Mirza Shigufta Bakht, Deputy Magistrate and Deputy Collector, Faridpur, is transferred to the Sirajganj subdivision of the Pabna district.

Midnapore.—No. 2075A.—27th February 1935.—Babu Sushil Chandra Ghosh, Deputy Magistrate and Deputy Collector, on leave, is posted to the headquarters station of the Midnapore district.

24-Parganas-Dacca Divn.—No. 2088A.—27th February 1935.—Maulvi Abdul Ghafur, No. II, Sub-Deputy Collector, Diamond Harbour, 24-Parganas, is posted to the Dacca Division.

24-Parganas.—No. 2118A.—28th February 1935. — Babu Binay Bhusan Das Gupta, Deputy Magistrate and Deputy Collector, 24-Parganas, is transferred temporarily to the Basirhat subdivision of that district.

Bakarganj.—No. 2142A. — 28th February 1935.—Babu Gurudas Sarkar, Deputy Magistrate and Deputy Collector, on leave, is posted to the headquarters station of the Bakarganj district.

Bakarganj.—No. 2149A. — 28th February 1935.—Maulvi Aminuzzaman Khan, Deputy Magistrate and Deputy Collector, on leave, is posted to the headquarters station of the Bakarganj district.

Midnapore.—No. 2206A.—2nd March 1935. —Major I. Stewart, Prince Albert Victor's Own Cavalry, is appointed temporarily to be a Joint Magistrate and Deputy Collector and is posted to the headquarters station of the Midnapore district.

POLICE.

24-Parganas.—No. 2099A.—27th February 1935.—Mr. G. Johnston, Inspector of Police, is appointed to act, until further orders, as Deputy Superintendent of Police and is posted to the headquarters station of the 24-Parganas district.

Rajshahi-Howrah. — No. 2159A. — 28th February 1935. — Rai Sahib Pramod Nath Mukharji, Deputy Superintendent of Police, Rajshahi, is posted to the headquarters station of the Howrah district.

Howrah-Rajshahi.—No. 2160A.—28th February 1935.—Babu Bashudeb Kabiraj, officiating Deputy Superintendent of Police, Howrah, is posted to the headquarters station of the Rajshahi district.

Calcutta.—No. 2198A.—1st March 1935.—Rai Sahib Upendra Nath Datta, Inspector of Police, Intelligence Branch, is appointed temporarily to act as Deputy Superintendent of Police and is posted to that Branch.

ECCLESIASTICAL.

Calcutta.—No. 2036A.—27th February 1935.—The Reverend E. J. Young, Chaplain of St. Peter's Church, Fort William, is appointed to act, until further orders, as Senior Chaplain of St. John's Church, Calcutta, and as Archdeacon of Calcutta, with effect from the 1st March 1935.

Leave.

GENERAL.

Bakarganj.—No. 1945A.—25th February 1935.—Mr. W. McC. Sharpe, I.C.S., District and Sessions Judge, Bakarganj, is allowed leave from the 19th March 1935 to the 26th September 1935, inclusive, viz., leave on average pay for four months, under rule 81 (*b*) (*i*) of the Fundamental Rules, and leave on half average pay for the remaining period, under rule 81 (*d*) of those Rules.

Dinajpur.—No. 2007A.—26th February 1935.—Rai Sahib Bhabesh Chandra Ray, Deputy Magistrate and Deputy Collector, Dinajpur, is allowed leave on average pay for three months and eight days, under rule 81 (*b*)(*ii*) of the Fundamental Rules, with effect from the 1st March 1935, or any subsequent date on which he may be relieved.

Bakarganj.—No. 2015A.—27th February 1935.—Rai Sahib Phanibhushan Mitra, Deputy Magistrate and Deputy Collector, Bakarganj, is allowed leave on average pay for four months, under rule 81 (*b*) (*ii*) of the Fundamental Rules, with effect from the 22nd March 1935, or any subsequent date on which he may be relieved.

Pabna.—No. 2017A.—27th February 1935. —Maulvi Muhammad Hedayet Ali, Deputy Magistrate and Deputy Collector, Sirajganj, Pabna, is allowed leave on average pay for four months, under rule 81(*b*)(*ii*) of the Fundamental Rules, with effect from the 21st March 1935, or any subsequent date on which he may be relieved.

Mymensingh.—No. 2126A.—28th February 1935.—Mr. R. S. Krishnaswamy, I.C.S., Joint Magistrate and Deputy Collector, Mymensingh, is allowed leave on average pay, under rule 81(*b*) (*ii*) of the Fundamental Rules, from the 6th March 1935 to the 12th April 1935, inclusive.

Tippera.—No. 2156A.—28th February 1935.—Babu Brajabandhu Bhaumik, Deputy Magistrate and Deputy Collector, Tippera, is allowed leave on average pay for four months, under rule 81 (*b*) (*ii*) of the Fundamental Rules, with effect from the 2nd March 1935 or any subsequent date on which he may be relieved.

Calcutta.—No. 2164A.—1st March 1935.—Mr. M. O. Carter, I.C.S., officiating Secretary, Board of Revenue, Bengal, is allowed leave on average pay for eight months, under rule 81(*b*) (*i*) of the Fundamental Rules, with effect from the 18th March 1935.

No. 2181A.—1st March 1935.—Babu Kshirod Prasad Barua, Sub-Deputy Collector, is allowed leave on average pay for two months, under rule 81(*b*) (*ii*) of the Fundamental Rules, in extension of the leave granted to him under the orders of the 14th January 1935.

Bakarganj.—No. 2199A.—1st March 1935.—Babu Rabindra Nath Basu, Deputy Magistrate and Deputy Collector, Bakarganj, is allowed leave on average pay, under rule 81(*b*) (*ii*) of the Fundamental Rules, from the 18th March 1935 to the 29th June 1935, inclusive.

POLICE.

No. 2085A.—27th February 1935.—Major E. G. Johnson, I.A., was granted by His Majesty's Secretary of State for India an extension of leave on medical certificate for three months, with effect from the 2nd November 1934.

Midnapore.—No. 2100A.—27th February 1935.—Mr. K. Tolson, Assistant Superintendent of Police, Contai, Midnapore, is allowed leave on average pay for six days, under rule 81(*b*)(*i*) of the Fundamental Rules, with effect from the 2nd January 1935.

E. N. BLANDY,

Chief Secy. to the Govt. of Bengal (offg.).

NOTIFICATIONS.

Darjeeling.—No. 1968A.—25th February 1935.—It is hereby notified that Mr. W. A. S Lewis, I.C.S., Subdivisional Officer, Kalimpong, Darjeeling, has passed an examination in the Nepali language in accordance with the rules laid down in Appendix VI to the Rules for the Departmental Examination of Assistant Magistrates and others.

No. 2175A.—1st March 1935.—Whereas by notification No. 2173A., dated the 1st March 1935, His Excellency the Governor has been pleased to call upon the Indian Tea Association constituency of the Bengal Legislative Council to elect a member to the said Council in place of Mr. C. K. Nicholl, resigned:

Now, therefore, the Governor in Council is pleased, in exercise of the powers conferred by clauses (*a*) and (*b*) of sub-rule (*2*) of rule 11 of the Bengal Electoral Rules, and in pursuance of sub-rule (*3*) of that rule, to prescribe the 8th March 1935 as the date for the nomination of candidates and for the delivery of nomination papers to the Returning Officer and the 9th March 1935 as the date on which the scrutiny of nominations shall be held.

No. 2246A.—4th March 1935.—The following correction and additions are made to rules 1, 4 and 9 in Appendix XVII to the Departmental Examination Rules:—

In rule 1 (*2*) *for* "Probation" *read* "Probationer."

After rule 4, *add*—

"*Note I.*—The term 'discharge' in this chapter includes, in the case of a probationer appointed by promotion from another service or post, reversion to that service or post.

Note II.—A recommendation that a period of probation should be extended by Government should be submitted in such time as to enable the orders of Government to reach the appointing authority before the date of expiry of the subsisting extended period of probation."

After rule 9, *add*—

"*Note.*—The probationary period of a service or of a post is an integral part of a time-scale and need not necessarily be at the beginning of such a scale. A Government servant who is appointed on probation at a stage higher than the minimum pay of the scale, either under special orders of a competent authority or by the application of the Fundamental Rules, may be granted the increments that fall due during the prescribed period of probation; he is not, however, entitled to any increment due after the expiry of his probationary service unless and until he is confirmed."

E. N. BLANDY,

Chief Secy. to the Govt of Bengal (offg.).

POLITICAL DEPARTMENT.

Political.

NOTIFICATIONS.

No. 1110P.S.—1st March 1935.—Whereas the Governor in Council is of opinion that the associations specified in the schedule hereto appended have for their object interference with the administration of the law and with the maintenance of law and order and constitute a danger to the public peace;

Now, therefore, in exercise of the powers conferred by sub-section (1) of section 16 of the Indian Criminal Law Amendment Act, 1908 (XIV of 1908), the Governor in Council is pleased to declare the said associations to be unlawful associations within the meaning of Part II of the said Act.

Schedule.

(1) The Calcutta Communist Party.
(2) The Calcutta Port and Dock Workers' Union.
(3) The Workers and Peasants' Party (Bengal Branch).
(4) The Calcutta Committee of the Communist Party of India.
(5) Kirti Dal, Bengal.
(6) The Workers' Party of India.
(7) The Indian Proletarian Revolutionary Party.
(8) The Bengal Jute Workers' Union.
(9) The Bengal Match Factory Workers' Union.
(10) The City Motor and Transport Workers' Union.
(11) The River Steam Navigation and India General Navigation and Railway Companies' Labourers' and Workers' Union.
(12) The Youth League, Bengal.
(13) The Chhatra Juba Samsad.

No. 5017Pub.—28th February 1935. — In exercise of the power conferred by section 19 of the Indian Press (Emergency Powers) Act, 1931 (XXIII of 1931), the Governor in Council is pleased to declare all copies, wherever found, of a book in Bengali entitled "Phul Jhuri" by Bimal Sen published by Kiran Chandra Mukharji from the Saraswati Library at 9, Ramanath Majumdar Street, Calcutta, to be forfeited to His Majesty, on the ground that it appears to the Governor in Council that the said book contains words of the nature described in clause (*d*) of sub-section (*1*) of section 4 of the said Act.

E. N. BLANDY,
Chief Secy. to the Govt. of Bengal (offg.).

Special.

NOTIFICATIONS.

No. 6107X.—7th March 1935.—Whereas in the opinion of the Government of Bengal there are reasonable grounds for believing that Babu Anath Bandhu Saha, son of Babu Kunja Lal Saha, of village Gomatali, police-station Ramganj, in the district of Noakhali, is a person in respect of whom an order may lawfully be made under sub-section (*1*) of section 2 of the Bengal Criminal Law Amendment Act, 1930; and

Whereas the Governor in Council on the 26th January 1935 in exercise of the powers conferred by the said section 2 was pleased to order the said Babu Anath Bandhu Saha to be committed to custody in the nearest District or Central Jail, and the arrest without warrant of the said Babu Anath Bandhu Saha at any place where he might be found by any police officer with a view to his commitment to custody; and

Whereas the said Babu Anath Bandhu Saha has not been arrested and the said order under section 2 of the said Act has not been served personally on the said person, and whereas due diligence has in the opinion of the Local Government been exercised to effect such personal service;

Now, therefore, the Governor in Council in exercise of the powers conferred by sub-section (*2*) of section 3 of the Bengal Criminal Law Amendment Act, 1930, is pleased to direct the said Babu Anath Bandhu Saha, son of Babu Kunja Lal Saha, of village Gomatali, police-station Ramganj, in the district of Noakhali, to appear before the Superintendent of Police, Noakhali, at Noakhali, within 15 days of this date for the purpose of receiving the aforesaid order.

No. 6253X.—7th March 1935.—In exercise of the power conferred by sub-section (*1*) of section 13 of the Bengal Criminal Law Amendment Act, 1930 (Ben. Act VI of 1930), the Governor in Council is pleased to make the following rule:—

Rule.

1. An officer making an arrest under sub-section (*1*) of section 4 of the Bengal Criminal Law Amendment Act, 1930, shall without unnecessary delay, unless he releases the arrested person, commit him to the custody specified by the Local Government by general or special order issued under sub-section (*3*) of that section.

2. No officer making an arrest under sub-section (*1*) of section 4 of the said Act shall detain in police custody any person so arrested for a longer period that in all the circumstances of the case is reasonable. Such period shall not, unless the District Magistrate by special order in writing so directs, exceed 24 hours and shall in no case exceed 72 hours, exclusive of the time necessary for the journey from the place of arrest to the place of custody, referred to in rule 1.

S. N. ROY,
Addl. Secy. to the Govt. of Bengal.

POLICE DEPARTMENT.

NOTIFICATIONS.

Malda.—No. 1016Pl.—20th February 1935.—In exercise of the power conferred by section 4 (*l*) (*s*) of the Code of Criminal Procedure, 1898 (Act V of 1898), and in modification of all previous notifications published in the *Calcutta Gazette* relating to area included in the Shibganj police-station in the district of Malda and to the boundaries of that area, the Governor in Council is pleased to declare that the village specified in the following schedule, which has hitherto been included in that police-station, shall be included in the Kaliachak police-station in the same district:—

Schedule.

Name of village.	General jurisdiction list number of thana Shibganj.
Bairbona ..	10

Calcutta-Howrah. — No. 1122Pl. — 27th February 1935.—In exercise of the powers conferred by sub-section (*1*) of section 71 of the Calcutta Hackney-carriage Act, 1919 (Bengal Act No. I of 1919), the Governor in Council is pleased to make the following amendment in the by-laws published under notification No. 1084M., dated the 31st March 1920, at pages 163 to 172 of Part IB of the *Calcutta Gazette* of the 7th April 1920, as amended by notifications No. 3130Pl., dated the 24th November 1923, No. 3677Pl., dated the 2nd September 1929, No. 871Pl., dated the 27th February 1933 and No. 2503Pl., dated the 16th May 1933:—

Amendment.

After by-law 13 of the said by-laws, *insert* the following new by-law, namely:—

"13A. The Registering Officer shall not register any rickshaw intended to be kept or used in Calcutta, including the suburbs and the Municipality of Howrah, if he considers that there are already an adequate number of rickshaws being kept for use or in use in Calcutta and its suburbs including the Municipality of Howrah."

E. N. BLANDY,

Chief Secy. to the Govt. of Bengal (offg.).

Orders by the Inspector-General of Police, Bengal.

Calcutta. — No. 2146A. — 27th February 1935.—**24-Parganas-Howrah.**—In consequence of the abolition of two posts of Inspector of the Eastern Bengal Railway Police, Sealdah, and the East Indian Railway Police, Howrah, sanctioned in Government order No. 885Pl., dated the 14th February 1935, the following changes are ordered with effect from the 1st March 1935:—

(*i*) Babu Akshay Kumar Datta, Inspector, Eastern Bengal Railway Police, Sealdah (officiating Deputy Superintendent of Police, Intelligence Branch), is absorbed in the permanent vacancy caused by the retirement of Babu Amrita Lal Raha, Inspector. He is posted, on paper, to the 24-Parganas.

(*ii*) The permanent vacancy caused by the retirement of Babu Bibhuti Bhushan Chakrabatti, Inspector, East Indian Railway Police, Howrah, will cease to exist in the cadre of that Railway Police.

No. 2190A.—28th February 1935.—**Hooghly-Chittagong - Midnapore - Murshidabad - 24-Parganas.**—Mr. J. Thomson, Armed Inspector, Hooghly (on leave), is posted to Chittagong in exchange with Mr. J. Irvine, Armed Inspector, proceeding on leave.

Mr. C. W. Marshall, Armed Inspector, Midnapore (on leave), is posted to Murshidabad.

Mr. W. B. Crombie, Armed Inspector, Murshidabad, is transferred to the 24-Parganas to fill the temporary post of Inspector sanctioned for the range reserve force and allotted to that district. He will remain attached, on paper, to Midnapore, *vice* Mr. C. W. Marshall, Armed Inspector, transferred.

The transfers of officers involved in these orders are sanctioned in the interests of public service.

T. J. A. CRAIG,

Inspector-General of Police, Bengal.

JUDICIAL DEPARTMENT.

No. 2311A.

Powers.

Midnapore.—No. 2131A.—28th February 1935.—Babu Sudhir Kumar Sen, Deputy Magistrate, Midnapore, is vested with powers under sections 110, 190(*1*) (*c*) and 524 of the Code of Criminal Procedure. He is also vested with the power to try summarily the offences mentioned in section 260 of that Code.

E. N. BLANDY,

Chief Secy. to the Govt. of Bengal (offg.).

Appointments and Transfers.

Murshidabad.—No. 1844J.—26th February 1935.—In exercise of the powers conferred by sections 14 and 15 and the proviso to section 357 of the Code of Criminal Procedure, 1898 (Act V of 1898), the Governor in Council is pleased—

(*a*) to confer upon Babu Hemanta Kumar Roy the powers of a Magistrate of the third class, in the district of Murshidabad, for a period of three years from the 10th April 1935, in respect to such cases as may be made over to him within the limits of the Jangipur subdivision of the said district,

(*b*) to direct that he shall, in addition to sitting singly, sit as a member of the Dhulian bench in the said district, and

(*c*) to direct him to take down evidence in the English language.

Calcutta. — No. 1861J. — 27th February 1935.—In exercise of the power conferred by section 531 of the Calcutta Municipal Act, 1923 (Bengal Act III of 1923), the Governor in Council is pleased—

(*a*) to appoint Mr. Sudhir Chunder Dutt, B.L., Bar.-at-Law, to act as Municipal Magistrate, Calcutta, during the absence, on leave, of Mr. Nagendra Nath Gupta, or until further orders, and

(*b*) to prescribe the Town Hall, Calcutta, as the place and 11 a.m. to 2 p.m. on Saturday and 11 a.m. to 5 p.m. on the other days of the week (except Sunday) as the time, respectively, at which the said Magistrate shall sit for despatch of business.

Calcutta. — No. 1865J. — 27th February 1935.—In exercise of the power conferred by sub-section (*1*) of section 12 of the Code of Criminal Procedure, 1898 (Act V of 1898), as subsequently amended, the Governor in Council is pleased to appoint Mr. Sudhir Chunder Dutt, B.L., Bar.-at-Law, to be a Magistrate of the first class, within such portions of Calcutta as defined in section 3(*11*) of the Calcutta Municipal Act, 1923 (Bengal Act III of 1923), as are not situated within the Presidency town.

In exercise of the power conferred by first clause lettered (*b*) in sub-section (*1*) of section 260 of the said Code, the Governor in Council is pleased to empower Mr. Sudhir Chunder Dutt, B.L., Bar.-at-Law, to try in a summary way offences mentioned in section 532 of the Calcutta Municipal Act, 1923 (Bengal Act III of 1923), and committed within any of the said portions of Calcutta.

Calcutta. — No. 1913J. — 28th February 1935.—Mr. Hugh Carey Morgan is appointed to be Solicitor to the Government of Bengal for a period of one year with effect from the 1st April 1935, *vice* Mr. S. S. Hodson, resigned.

Mymensingh.—No. 1975J.—1st March 1935.—In exercise of the powers conferred by sections 14 and 15 and the proviso to section 357 of the Code of Criminal Procedure, 1898 (Act V of 1898), the Governor in Council is pleased—

(*a*) to confer upon Maulvi Ashraf Husain Khan Chaudhuri the powers of a Magistrate of the third class, in the district of Mymensingh, for a period of three years from the 7th March 1935,

(*b*) to direct him to sit as a member of the Sadar bench in the said district, and

(*c*) to direct him to take down evidence in the English language.

Mymensingh.—No. 1977J.—1st March 1935.—In exercise of the powers conferred by sections 14 and 15 and the proviso to section 357 of the Code of Criminal Procedure, 1898 (Act V of 1898), the Governor in Council is pleased—

(*a*) to confer upon Maulvi Md. Yakub Ali the powers of a Magistrate of the third class, in the district of Mymensingh, for a period of three years from the date of this notification,

(*b*) to direct him to sit as a member of the Sadar bench in the said district, and

(*c*) to direct him to take down evidence in the English language.

Leave.

Calcutta. — No. 1858J. — 27th February 1935.—Mr. Nagendra Nath Gupta, Bar.-at-Law, Municipal Magistrate, Calcutta, is allowed leave on half average pay for the period from the 8th April 1935 or from any subsequent date to the 30th September 1935, under rule 81(*d*) of the Fundamental Rules.

Calcutta.—No. 1980J.—1st March 1935.—Mr. Mowdudur Rahman, Bar.-at-Law, Judge, Court of Small Causes, Calcutta, is allowed leave on average pay for the period from the 3rd March 1935 to the 18th April 1935, under rules 81(*b*)(*n*) and 82(*b*) of the Fundamental Rules, in extension of the leave already granted to him.

NOTIFICATIONS.

Bankura.—No. 1796J. — 25th February 1935.—In exercise of the power conferred by section 65 of the Bengal Village Self-Government Act, 1919 (Bengal Act V of 1919), the Governor in Council is pleased to appoint the following members of the union boards mentioned below, to be, during their term of office as such members, union benches within the jurisdiction of the union boards of which they are, respectively, members for the purposes of that section:—

Sadar subdivision, Bankura district.

Mejhia police-station.

Mejhia union board.

Babu Rakhal Chandra Ghosh.
Babu Rajani Kanta Ray.
Babu Sasi Bhusan Dubey.
Babu Amulya Ratan Pal.

Gangajalghati police-station.

Barshal union board.

Babu Bholanath Mandal.
Babu Sarbeswar Ray.
Babu Nilmadhab Majhi.
Babu Hem Chandra Tewari.

Saltora police-station.

Salma union board.

Babu Kalipada Sengupta.
Babu Radhamadhab Misra.
Babu Krishna Kishore Ray
Babu Haripada Chowdhuri.

Tiluri union board.

Babu Braja Kishore Sen Ukil.
Babu Rajendra Lal Sarkar.
Babu Satish Chandra Sen.
Babu Baroda Kanta Ray.

Barjora police-station.

Pakhanna union board.

Babu Kali Bhusan Mukharji.
Babu Nalininath Chatarji.
Babu Jogesh Chandra Chatarji.
Babu Kamalananda Sarkar.

Godardihi union board.

Babu Pravakar Chattaraj.
Babu Barunoday Chakrabatti.
Babu Dhirendra Nath Singha Thakur.
Rai Sahib Bholanath Mitra.

Beliatore union board.

Babu Nabakrishna Ray.
Babu Jogendra Nath Pal.
Babu Sasi Sekhar Ray.
Babu Benoy Krishna Ray.

This notification will take effect from the date of the first meeting of the reconstituted union boards at which a quorum is present.

Bankura.—No. 1797J. — 25th February 1935.—In exercise of the power conferred by section 73 of the Bengal Village Self-Government Act, 1919 (Bengal Act V of 1919), the Governor in Council is pleased to appoint the following members of the union boards mentioned below, to be, during their term of office as such members, union courts within the jurisdiction of the union boards of which they are, respectively, members for the purposes of that section:—

Sadar subdivision, Bankura district.

Mejhia police-station.

Mejhia union board.

Babu Rakhal Chandra Ghosh.
Babu Rajani Kanta Ray.
Babu Sasi Bhusan Dubey.
Babu Amulya Ratan Pal.

Gangajalghati police-station.

Barshal union board.

Babu Bholanath Mandal.
Babu Sarbeswar Ray
Babu Nilmadhab Majhi.
Babu Hem Chandra Tewari.

Saltora police-station.

Salma union board.

Babu Kulipada Sengupta.
Babu Radhamadhab Misra.
Babu Krishna Kishore Ray.
Babu Haripada Chowdhuri.

Tiluri union board.

Babu Braja Kishore Sen Ukil.
Babu Rajendra Lal Sarkar.
Babu Satish Chandra Sen.
Babu Baroda Kanta Ray.

Barjora police-station.

Pakhanna union board.

Babu Kali Bhusan Mukharji.
Babu Nalininath Chatarji.
Babu Jogesh Chandra Chatarji.
Babu Kamalananda Sarkar.

Godardihi union board.

Babu Pravakar Chattaraj.
Babu Barunoday Chakrabatti.
Babu Dhirendra Nath Singha Thakur.
Rai Sahib Bholanath Mitra.

Beliatore union board.

Babu Nabakrishna Ray.
Babu Jogendra Nath Pal.
Babu Sasi Sekhar Ray.
Babu Benoy Krishna Ray.

This notification will take effect from the date of the first meeting of the reconstituted union boards at which a quorum is present.

Murshidabad.—No. 1838J.—26th February 1935.—In exercise of the power conferred by section 65 of the Bengal Village Self-Government Act, 1919 (Bengal Act V of 1919), the Governor in Council is pleased to appoint the following members of the union boards mentioned below, to be, during their term of office as such members, union benches within the jurisdiction of the union boards of which they are, respectively, members for the purposes of that section:—

Jangipur subdivision, Murshidabad district.

Raghunathganj police-station.

Jorur union board.

Babu Sashi Bhusan Ray.
Babu Kali Kanta Das.
Babu Girija Bhusan Ray.
Munshi Saifuddin Mandal.
Munshi Abujan Sheikh.

Daffarpur union board.

Babu Kirit Bhusan Das.
Babu Kalipada Das.
Babu Mahesh Narain Das.
Munshi Monab Mandal.
Munshi Mahammad Musa.

2. This notification will take effect from the date of the first meeting of the reconstituted union boards at which a quorum is present.

Murshidabad.—No. 1839J.—26th February 1935.—In exercise of the power conferred by section 73 of the Bengal Village Self-Government Act, 1919 (Bengal Act V of 1919), the Governor in Council is pleased to appoint the following members of the union boards mentioned below, to be, during their term of office as such members, union courts within the jurisdiction of the union boards of which they are, respectively, members for the purposes of that section:—

Jangipur subdivision, Murshidabad district.

Raghunathganj police-station.

Jorur union board.

Babu Sashi Bhusan Ray.
Babu Kali Kanta Das.
Babu Girija Bhusan Ray.
Munshi Saifuddin Mandal.
Munshi Abujan Sheikh.

Daffarpur union board.

Babu Kirit Bhusan Das.
Babu Kalipada Das.
Babu Mahesh Narain Das.
Munshi Monab Mandal.
Munshi Mahammad Musa.

2. This notification will take effect from the date of the first meeting of the reconstituted union boards at which a quorum is present.

Mymensingh.—No. 1849J.—26th February 1935.—In exercise of the power conferred by section 65 of the Bengal Village Self-Government Act, 1919 (Bengal Act V of 1919), the Governor in Council is pleased to appoint the following members of the union boards mentioned below, to be, during their term of office as such members, union benches within the jurisdiction of the union boards of which they are, respectively, members for the purposes of that section:—

Tangail subdivision, Mymensingh district.

Mogra union board.

Babu Durga Nath Pal.
Babu Debidas Pal.
Babu Amulya Chandra Choudhuri.
Munshi Fakir Mahmud Sarkar.
Munshi Ijjat Ulla Munshi.

Gala union board.

Babu Hem Chandra Ray.
Babu Rajani Kanta Chakrabatti.
Babu Jadu Nath Sarkar.
Babu Surendra Nath Bhaumik.
Munshi Illimuddin Sarkar.
Munshi Mahamadali Talukdar.

Gharinda union board.

Babu Jogesh Govinda Majumder.
Babu Suresh Govinda Majumder.
Babu Keshori Mohan Bhaumik.
Maulvi Md. Mosoraf Hossain Khan.
Maulvi Ismail Khan.
Maulvi Fazlar Rahaman Khan.

Karatia union board.

Babu Umesh Chandra Kabyaratna.
Babu Peari Mohan Guha.
Babu Naba Kumar Ray Chaudhuri.
Maulvi Syed Muzaffar Al Musavi.
Maulvi Syed Mural Muda.
Maulvi Reazuddin Talukdar.

Pathrail union board.

Babu Kamini Kumar Neogi.
Babu Nalini Kanta Sarkar.
Babu Kalidas Chakrabatti.
Maulvi Fazlar Rahman.
Maulvi Hazi Ensadali Talukdar.
Maulvi Emamuddin Sarkar.

Delduar union board.

Munshi Osmanuddin Sarkar.
Munshi Abdul Halim Khan.
Munshi Abbas Ali Mea.
Babu Manindra Chandra Bhaumik.

Elashin union board.

Maulvi Khondkar Momtajuddin.
Munshi Saritulla Sarkar.
Munshi Daneshali Sarkar.
Babu Tarak Bandhu Gangali.
Babu Jatindra Kishore Ray.

Atia union board.

Babu Baikuntha Nath Goswami.
Babu Tarakeswar Biswas.
Babu Aswini Kumar Goswami.
Munshi Madari Sarkar.
Munshi Mir Abdul Salam.

Silimpur union board.

Babu Suresh Chandra Majumder.
Babu Bhabani Prosad Saha.
Babu Birendra Kumar Saha.
Doctor Abdur Rahman.
Munshi Beiran Ali Mia.

Danya union board.

Babu Jatindra Nath Ray.
Babu Sasadhar Ray.
Babu Girindra Mohan Bakshi.
Babu Jagadish Chandra Ray.
Maulvi Abdul Hakim.
Maulvi Ahmed Ali Mia.

Baghil union board.

Munshi Abdul Gaffur Mia.
Munshi Ahadali Mia.
Munshi Rafetullah Sarkar.
Munshi Omarali Sarkar.
Babu Banamali Adhikari.

Basail police-station.

Fulki union board.

Maulvi A. K. Md. Edris Khan.
Munshi Anserali Talukdar.
Munshi Momtajali Bhuya.
Munshi Mohammadali Sarkar.
Babu Surendra Mohan Ghosh.

Kowaljani union board.

Maulvi Azaharuddin Talukdar.
Munshi Hazi Abbas Ali.
Munshi Abdul Samad Mirdha.
Munshi Abdul Based Bhuya.
Babu Akshoy Kumar Basu.

Kanchanpur union board.

Maulvi Mofijuddin Khan.
Munshi Taheruddin Mia.
Munshi Mojaharali Khan.
Babu Bejay Chandra Saha.

Basail union board.

Babu Ananta Kumar Ray.
Babu Jogesh Lal Saha.
Babu Kritanta Kumar Ray.
Maulvi Yakubali Khan Sur.
Munshi Abdul Gaffar Bhuya.
Munshi Mobarak Hossain Mia.

Kashil union board.

Munshi Moyejuddin Talukdar.
Munshi Jangu Mirza.
Munshi Majamali Khan.
Babu Prosanna Kumar De.
Babu Kedar Nath Guha.

Habla union board.

Doctor Abdur Rahman.
Munshi Fakir Mohmud Mia.
Munshi Moksedali Biswas.
Kabiraj Nur Mahamad Mia.
Babu Nadir Chand Adhikari.
Babu Devendra Kumar Saha.

Dubail union board.

Doctor Mofizuddin Ahmed.
Maulvi Abdul Majid Akanda.
Maulvi Dewan Abdul Basir.
Babu Tarak Chandra Biswas.
Munshi Haji Ayenuddin Talukdar.

Nagarpur police-station.

Deuli union board.

Maulvi Kazi Abdul Salam.
Maulvi Hazi Manikuddin.
Babu Dinesh Ch. Guha.
Babu Mukunda Nath Mukharji.
Babu Pramath Nath Banarji.

Bharra union board.

Babu Sudhir Kumar Ghosh Chaudhuri.
Babu Prasanna Kumar Ghosh.
Maulvi Md. Kasimuddin Sarkar.
Maulvi Wasimuddin Ahamad.

Sahabatpur union board.

Babu Ambika Dayal Ghosh.
Babu Radhikalal Goswami.
Babu Rohini Kanta Saha.
Maulvi Ahamadali Mir.
Maulvi Md. Ismail Hossain Khan.

Louhati union board.

Maulvi Asrafali Khan.
Maulvi Abdul Aziz.
Babu Surendra Mohan Chakrabatti.
Babu Prafulla Kumar Sarkar.

Goyhatta union board.

Babu Surendra Mohan Saha.
Babu Nata Kanta Chakrabatti.
Maulvi Naosherali Khan.
Maulvi Sirajuddin Ahamed.
Babu Bhabesh Ch. Ray.
Babu Nitya Nanda Sarkar.

Nagarpur union board.

Babu Nagendra Lal Chaudhuri.
Babu Satish Ch. Saha.
Babu Nalilal Saha Poddar.
Maulvi Abdul Halim.
Maulvi Md. Alimuddin Nasirabadi.
Maulvi Abdul Wahid.

Salimabad union board.

Maulvi Ghulam Joynal Abdin.
Maulvi Kazi Eklashuddin.
Babu Lalit Mohan Basu.
Babu Dwijendra Kumar Saha.

Bhadra union board.

Babu Jatindra Mohan Singha.
Babu Amar Govinda Chakrabatti.
Maulvi Md. Adam Munshi.
Munshi Sabdul Khan.
Babu Kamakshya Nath Bhaumic.

Mamudnagar union board.

Babu Suresh Ch. Bakshi.
Babu Suresh Chandra Guha Majumdar.
Maulvi Emamali Sarkar.
Maulvi Maniruddin Sarkar.

Mokna union board.

Babu Bhabendra Mohan Ray Chaudhuri.
Babu Saradacharan Guha.
Maulvi Jonabali Sarkar.
Maulvi Abdur Rahman Sarkar.

Pakutia union board.

Babu Manindra Kumar Ray Chaudhuri.
Babu Rabindra Mohan Ray Chaudhuri.
Babu Bijoyananda Bhattacharji.
Maulvi Samaduddin Chaudhuri.
Maulvi Wazed Ali Mia.

Mirzapur police-station.

Jamurki union board.

Maulvi Abdul Hussain Chaudhuri.
Maulvi Abdul Hamid Khan Chaudhuri.
Babu Haridas Chaudhuri.
Babu Meglal Saha Poddar.

Mirzapur union board.

Babu Jagadish Ch. Gupta Bakshi.
Babu Jatindra Mohan Sanyal.
Maulvi Md. Abdur Rahman Mia.
Maulvi Md. Tamizuddin.
Babu Gurudas Sarkar.
Maulvi Khondker Abdul Gaffar.

Banail union board.

Babu Parbati Charan Guha.
Babu Dinesh Ch. Ghatak.
Babu Nibaran Ch. Datta.
Maulvi Md. Sultanali Khan.
Maulvi Abdul Hamid Mia.

Anaitara union board.

Babu Girija Mohan Bhattacharji.
Babu Kshetranath Sarkar.
Babu Keshab Ch. Basu.
Maulvi Asrafali Sarkar.
Maulvi Ghulam Kazem Talukdar.

Warshi union board.

Babu Kshetranath Basu.
Babu Nibaran Ch. Ray.
Babu Satish Ch. Chakrabatti.
Maulvi Warish Kan Sarkar.
Dr. Abdul Samad Khan.

Kalihati police-station.

Narandia union board.

Babu Jnanendra Prosad Guha Ray.
Munshi Mujaffar Sarkar.
Babu Surendra Kumar Saha.
Maulvi Insanali Talukdar.
Babu Ganesh Chandra Talukdar.

Kalihati union board.

Babu Satish Chandra Basu.
Maulvi Alauddin Sah Fakir.
Babu Anath Bandhu Chakrabatti.
Babu Harendra Kumar Saha Chaudhuri
Babu Kshetra Mohan Chakrabatti.

Sahadevpur union board.

Babu Jadav Chandra Munshi.
Maulvi Abdul Karim Mian.
Maulvi Moslemuddin Siddiki.
Babu Bhabani Nath Das.
Maulvi Md. Tozammel Huque.

Kokdahara union board.

Babu Harendra Chandra Guha.
Babu Gopinath Pal.
Babu Ananta Kumar Neogi.
Maulvi Sultan Mahmud Khan.
Maulvi Kasimuddin Talukdar.

Ghatail police-station.

Deulabari union board.

Maulvi Saman Ali Dewan.
Babu Pran Nath De Talukdar.
Maulvi Jalaluddin Sarkar.
Babu Mahim Chandra Das.

Ghatail union board.

Babu Purna Chandra Chakrabatti.
Maulvi Jasimuddin Ahmad.
Maulvi Salimuddin Talukdar.
Babu Dinesh Chandra Chanda.
Babu Barada Charan Ray.

Panchtikri union board.

Maulvi Md. Abdul Jalil.
Babu Nalini Mohan Sarkar.
Babu Fatik Chandra Ghosh.
Maulvi Hazi Bahirulla Sarkar.
Maulvi Eakubali Talukdar.

Dighalkandi union board.

Maulvi S. M. Khandemal Islam.
Maulvi Fayejuddin Sarkar.
Babu Rameswar Ray.
Babu Gangadhar Pal.
Babu Lalit Chandra Shome.

Digar union board.

Babu Madhusudan Pal Chaudhuri.
Babu Jadu Lal Ray Chaudhuri.
Babu Brajendra Kumar Pal.
Maulvi Abdul Khalek Siddiki.
Maulvi Khondkar Hatemali.
Maulvi Jamiruddin Ahmad.
Maulvi Ibrahimuddin Ahmad.

Gopalpur police-station.

Masuddi union board.

Munshi Sekandar Ali Ahmad.
Munshi Zainuddin Ahmad.
Munshi Shahbat Ullah.
Munshi Aftabuddin Ahmad.
Munshi Salimuddin Sikdar.

Hadira union board.

Munshi Ismail Husain Ahmad.
Maulvi Kazem Uddin Talukdar.
Maulvi Haji Gadu Sarkar.
Maulvi Eman Ali.
Maulvi Md. Abdul Hamid Talukdar.
Babu Keshab Chandra Chanda.

Jhawail union board.

Maulvi Abdul Bari Jamali.
Maulvi Abdur Rahman Talukdar.
Maulvi Abdus Sobhan Chaudhuri.
Munshi Md. Husain Ali Talukdar.
Munshi Marfat Ali Sarkar.
Babu Pramatha Nath Shaha.

Gopalpur union board.

Babu Basanta Kumar Chanda Talukdar.
Babu Umesh Chandra Singha.
Maulvi Golam Nabi Khan.
Munshi Abbas Ali Sarkar.
Doctor Tazemuddin Ahmad.
Munshi Alauddin Ahmad.

Dhopakandi union board.

Babu Bhupati Mohan Ray Chaudhuri.
Babu Jnanendra Chandra Kundu.
Babu Raman Krishna Goswami.
Munshi Khondokar Yousaf Ali.
Munshi Samiruddin Akanda.
Maulvi Mohammad Alauddin.

Suti union board.

Munshi Jafiruddin.
Munshi Naimuddin Sarkar.
Doctor Abdul Aziz Talukdar.
Babu Sharat Chandra Datta.
Babu Rajani Kanta De.
Babu Nilkamal Pandit.

Hemnagar union board.

Babu Surjya Kanta Gangali.
Babu Surendra Lal Goswami.
Maulvi Hatem Ali Khan.
Munshi Jamsher Ali Mia.
Munshi Jasimuddin Talukdar.
Ebrahim Talukdar.

Falda union board.

Munshi Muhammad Shahbat Ali.
Munshi Easin Ali Sarkar.
Munshi Yonnos Ali Sarkar.
Babu Surendra Nath Bhaduri.
Doctor Bepin Behari Datta.
Munshi Jabed Ali Talukdar.

Mirzapur union board.

Munshi Khondokar Hatem Ali.
Munshi Naya Mia.
Maulvi Nasimuzzaman.
Babu Kali Nath Routh.
Babu Nripendra Narayan Ray.

Gobindasi union board.

Babu Dinesh Chandra Deb Ray.
Babu Jadab Chandra Basak.
Maulvi Akbar Husain Mia.
Munshi Golam Martuza Talukdar.
Munshi Aran Sarkar.
Munshi Shahebuddin Sarkar.

Shealkhole union board.

Babu Umesh Chandra Ghosh.
Babu Bharat Chandra Malakar.
Maulvi Ebrahim Khan.
Maulvi Nawab Ali Talukdar.
Munshi Moizuddin Khondokar.

Madhupur police-station.

Birtara union board.

Maulvi Ramjan Ali Talukdar.
Maulvi Md. Yonnon Ali.
Munshi Jonab Ali Fakir.
Babu Surendra Chandra Talukdar.
Babu Madhabendu Poddar.

Dhanbari union board.

Babu Shashi Mohan Talukdar.
Maulvi Mir Mahtab Ali.
Maulvi Golam Ahmad Siddiqui.
Munshi Mir Abdus Samad.
Munshi Khondokar Metasim Billa.

Paiska union board.

Maulvi Md. Habibur Rahman.
Maulvi Muhammad Ali.
Munshi Md. Nawsher Ali.
Munshi Shabefullah Sarkar.
Munshi Aman Ali Khan.
Munshi Umed Ali Sarkar.

Dhopakhali union board.

Munshi Haji Barkatuddin Sarkar.
Babu Krishna Chandra Datta.
Babu Jatindra Nath Sen.
Munshi Molfat Ali Khan.
Munshi Salimuddin Sarkar.

Madhupur union board.

Babu Durgesh Chandra Neogi.
Babu Purna Chandra De.
Hafez Maulvi Abdul Majid.
Munshi Mansoor Ali.
Munshi Ainuddin Sarkar.

2. This notification will take effect from the date of the first meeting of the reconstituted union boards at which a quorum is present.

Mymensingh.—No. 1850J.—26th February 1935.—In exercise of the power conferred by section 73 of the Bengal Village Self-Government Act, 1919 (Bengal Act V of 1919), the Governor in Council is pleased to appoint the following members of the union boards mentioned below, to be, during their term of office as such members, union courts within the jurisdiction of the union boards of which they are, respectively, members for the purposes of that section:—

Tangail subdivision, Mymensingh district.

Mogra union board.

Babu Durga Nath Pal.
Babu Debidas Pal.
Babu Amulya Chandra Chaudhuri.
Munshi Fakir Mahmud Sarkar.
Munshi Ijjat Ulla Munshi.

Gala union board.

Babu Hem Chandra Ray.
Babu Rajani Kanta Chakrabatti.
Babu Jadu Nath Sarkar.
Babu Surendra Nath Bhaumik.
Munshi Illimuddin Sarkar.
Munshi Mahammadali Talukdar.

Gharinda union board.

Babu Jogesh Govinda Majumder.
Babu Suresh Govinda Majumder.
Babu Keshori Mohan Bhaumik.
Maulvi Md. Mosoraf Hossain Khan.
Maulvi Ismail Khan.
Maulvi Fazlar Rahaman Khan.

Karatia union board.

Babu Umesh Chandra Kabyaratna.
Babu Peari Mohan Guha.
Babu Naba Kumar Ray Chaudhuri.
Maulvi Syed Muzaffar Al Musavi.
Maulvi Syed Mural Muda.
Maulvi Reazuddin Talukdar.

Pathrail union board.

Babu Kamini Kumar Neogi.
Babu Nalini Kanta Sarkar.
Babu Kalidas Chakrabatti.
Maulvi Fazlar Rahman.
Maulvi Hazi Ensadali Talukdar.
Maulvi Emamuddin Sarkar.

Delduar union board.

Munshi Osmanuddin Sarkar.
Munshi Abdul Halim Khan.
Munshi Abbas Ali Mea.
Babu Manindra Chandra Bhaumik.

Elashin union board.

Maulvi Khondkar Momtajuddin.
Munshi Saritulla Sarkar.
Munshi Daneshali Sarkar.
Babu Tarak Bandhu Gangali.
Babu Jatindra Kishore Ray.

Atia union board.

Babu Baikuntha Nath Goswami.
Babu Tarakeswar Biswas.
Babu Aswini Kumar Goswami.
Munshi Madari Sarkar.
Munshi Mir Abdul Salam.

Silimpur union board.

Babu Suresh Chandra Majumder.
Babu Bhabani Prosad Saha.
Babu Birendra Kumar Saha.
Doctor Abdur Rahman.
Munshi Beiran Ali Mia.

Danya union board.

Babu Jatindra Nath Ray.
Babu Sasadhar Ray.
Babu Girindra Mohan Bakshi.
Babu Jagadish Chandra Ray.
Maulvi Abdul Hakim.
Maulvi Ahmed Ali Mia.

Baghil union board.

Munshi Abdul Gaffur Mia.
Munshi Ahadali Mia.
Munshi Rafetullah Sarkar.
Munshi Omarali Sarkar.
Babu Banamali Adhikari.

Basail police-station.

Fulki union board.

Maulvi A. K. Md. Edris Khan.
Munshi Anserali Talukdar.
Munshi Momtajali Bhuya.
Munshi Mohammadali Sarkar.
Babu Surendra Mohan Ghosh.

Kowaljani union board.

Maulvi Azaharuddin Talukdar.
Munshi Hazi Abbas Ali.
Munshi Abdul Samad Mirdha.
Munshi Abdul Based Bhuya.
Babu Akshoy Kumar Basu.

Kanchanpur union board

Maulvi Mofijuddin Khan.
Munshi Taheruddin Mia.
Munshi Mojaharali Khan.
Babu Bejay Chandra Saha.

Basail union board.

Babu Ananta Kumar Ray.
Babu Jogesh Lal Saha.
Babu Kritanta Kumar Ray.
Maulvi Yakubali Khan Sur.
Munshi Abdul Gaffar Bhuya.
Munshi Mobarak Hossain Mia

Kashil union board.

Munshi Moyejuddin Talukdar.
Munshi Jangu Mirza.
Munshi Majamali Khan.
Babu Prosanna Kumar De.
Babu Kedar Nath Guha.

Habla union board.

Doctor Abdur Rahman.
Munshi Fakir Mohmud Mia.
Munshi Moksedali Biswas.
Kabiraj Nur Mahammad Mia.
Babu Nadir Chand Adhikari.
Babu Devendra Kumar Saha.

Dubail union board.

Doctor Mofizuddin Ahmad.
Maulvi Abdul Majid Akanda.
Maulvi Dewan Abdul Basir.
Babu Tarak Chandra Biswas.
Munshi Haji Ayenuddin Talukdar

Nagarpur police-station.

Deuli union board.

Maulvi Kazi Abdul Salam.
Maulvi Hazi Manikuddin.
Babu Dinesh Ch. Guha.
Babu Mukunda Nath Mukharji.
Babu Pramath Nath Banarji.

Bharra union board.

Babu Sudhir Kumar Ghosh Chaudhuri.
Babu Prasanna Kumar Ghosh.
Maulvi Md. Kasimuddin Sarkar.
Maulvi Wasimuddin Ahamad.

Sahabatpur union board.

Babu Ambika Dayal Ghosh.
Babu Radhikalal Goswami.
Babu Rohini Kanta Saha.
Maulvi Ahamadali Mir.
Maulvi Md. Ismail Hossain Khan.

Louhati union board.

Maulvi Asrafali Khan.
Maulvi Abdul Aziz.
Babu Surendra Mohan Chakrabatti.
Babu Prafulla Kumar Sarkar.

Goyhatta union board.

Babu Surendra Mohan Saha.
Babu Nata Kanta Chakrabatti.
Maulvi Naosherali Khan.
Maulvi Sirajuddin Ahamed.
Babu Bhabesh Ch. Ray.
Babu Nitya Nanda Sarkar.

Nagarpur union board.

Babu Nagendra Lal Chaudhuri.
Babu Satish Ch. Saha.
Babu Nalilal Saha Poddar.
Maulvi Abdul Halim.
Maulvi Md. Alimuddin Nasirabadi.
Maulvi Abdul Wahid.

Salimabad union board.

Maulvi Ghulam Joynal Abdin.
Maulvi Kazi Eklashuddin.
Babu Lalit Mohan Basu.
Babu Dwijendra Kumar Saha.

Bhadra union board.

Babu Jatindra Mohan Singha.
Babu Amar Govinda Chakrabatti.
Maulvi Md. Adam Munshi.
Munshi Sabdul Khan.
Babu Kamakshya Nath Bhaumic.

Mamudnagar union board.

Babu Suresh Ch. Bakshi.
Babu Suresh Chandra Guha Majumdar.
Maulvi Emamali Sarkar.
Maulvi Maniruddin Sarkar.

Mokna union board.

Babu Bhabendra Mohan Ray Chaudhuri.
Babu Saradacharan Guha.
Maulvi Jonabali Sarkar.
Maulvi Abdur Rahman Sarkar.

Pakutia union board.

Babu Manindra Kumar Ray Chaudhuri.
Babu Rabindra Mohan Ray Chaudhuri.
Babu Bijoyananda Bhattacharji.
Maulvi Samaduddin Chaudhuri.
Maulvi Wazed Ali Mia.

Mirzapur police-station.

Jamurki union board.

Maulvi Abdul Hussain Chaudhuri.
Maulvi Abdul Hamid Khan Chaudhuri.
Babu Haridas Chaudhuri.
Babu Meglal Saha Poddar.

Mirzapur union board.

Babu Jagadish Ch. Gupta Bakshi.
Babu Jatindra Mohan Sanyal.
Maulvi Md. Abdur Rahman Mia.
Maulvi Md. Tamizuddin.
Babu Gurudas Sarkar.
Maulvi Khondker Abdul Gaffar.

Banail union board.

Babu Parbati Charan Guha.
Babu Dinesh Ch. Ghatak.
Babu Nibaran Ch. Datta.
Maulvi Md. Sultanali Khan.
Maulvi Abdul Hamid Mia.

Anaitara union board.

Babu Girija Mohan Bhattacharji.
Babu Kshetranath Sarkar.
Babu Keshab Ch. Basu.
Maulvi Asrafali Sarkar.
Maulvi Ghulam Kazem Talukdar.

Warshi union board.

Babu Kshetranath Basu.
Babu Nibaran Ch. Ray.
Babu Satish Ch. Chakrabatti.
Maulvi Warish Kan Sarkar.
Dr. Abdul Samad Khan.

Kalihati police-station.

Narandia union board.

Babu Jnanendra Prosad Guha Ray.
Munshi Mujaffar Sarkar.
Babu Surendra Kumar Saha.
Maulvi Insanali Talukdar.
Babu Ganesh Chandra Talukdar.

Kalihati union board.

Babu Satish Chandra Basu.
Maulvi Alauddin Sah Fakir.
Babu Anath Bandhu Chakrabatti.
Babu Harendra Kumar Saha Chaudhuri.
Babu Kshetra Mohan Chakrabatti.

Sahadevpur union board.

Babu Jadav Chandra Munshi.
Maulvi Abdul Karim Mian.
Maulvi Moslemuddin Siddiki.
Babu Bhabani Nath Das.
Maulvi Md. Tozammel Huque.

Kokdahara union board.

Babu Harendra Chandra Guha.
Babu Gopinath Pal.
Babu Ananta Kumar Neogi.
Maulvi Sultan Mahmud Khan.
Maulvi Kasimuddin Talukdar.

Ghatail police-station.

Deulabari union board.

Maulvi Saman Ali Dewan.
Babu Pran Nath De Talukdar.
Maulvi Jalaluddin Sarkar.
Babu Mahim Chandra Das.

Ghatail union board.

Babu Purna Chandra Chakrabatti.
Maulvi Jasimuddin Ahmad.
Maulvi Salimuddin Talukdar.
Babu Dinesh Chandra Chanda.
Babu Barada Charan Ray.

Panchtikri union board.

Maulvi Md. Abdul Jalil.
Babu Nalini Mohan Sarkar.
Babu Fatik Chandra Ghosh.
Maulvi Hazi Bahirulla Sarkar
Maulvi Eakubali Talukdar.

Dighalkandi union board.

Maulvi S. M. Khandemal Islam.
Maulvi Fayejuddin Sarkar.
Babu Rameswar Ray.
Babu Gangadhar Pal.
Babu Lalit Chandra Shome.

Digar union board.

Babu Madhusudan Pal Chaudhuri.
Babu Jadu Lal Ray Chaudhuri.
Babu Brajendra Kumar Pal.
Maulvi Abdul Khalek Siddiki.
Maulvi Khondkar Hatemali.
Maulvi Jamiruddin Ahmad.
Maulvi Ibrahimuddin Ahmad.

Gopalpur police-station.

Masuddi union board.

Munshi Sekandar Ali Ahmad.
Munshi Zainuddin Ahmad.
Munshi Shahbat Ullah.
Munshi Aftabuddin Ahmed.
Munshi Salimuddin Sikdar.

Hadira union board.

Munshi Ismail Husain Ahmad.
Maulvi Kazem Uddin Talukdar.
Maulvi Haji Gadu Sarkar.
Maulvi Eman Ali.
Maulvi Md. Abdul Hamid Talukdar.
Babu Keshab Chandra Chanda.

Jhawail union board.

Maulvi Abdul Bari Jamali.
Maulvi Abdur Rahman Talukdar.
Maulvi Abdus Sobhan Chaudhuri.
Munshi Md. Husain Ali Talukdar.
Munshi Marfat Ali Sarkar.
Babu Pramatha Nath Shaha.

Gopalpur union board.

Babu Basanta Kumar Chanda Talukdar.
Babu Umesh Chandra Singha.
Maulvi Golam Nabi Khan.
Munshi Abbas Ali Sarkar.
Doccor Tazemuddin Ahmad.
Munshi Alauddin Ahmad.

Dhopakandi union board.

Babu Bhupati Mohan Ray Chaudhuri.
Babu Jnanendra Chandra Kundu.
Babu Raman Krishna Goswami.
Munshi Khondokar Yousaf Ali.
Munshi Samiruddin Akanda.
Maulvi Mohammad Alauddin.

Suti union board.

Munshi Jafiruddin.
Munshi Naimuddin Sarkar.
Doctor Abdul Aziz Talukdar.
Babu Sharat Chandra Datta.
Babu Rajani Kanta De.
Babu Nilkamal Pandit.

Hemnagar union board.

Babu Surjya Kanta Gangali.
Babu Surendra Lal Goswami.
Maulvi Hatem Ali Khan.
Munshi Jamsher Ali Mia.
Munshi Jasimuddin Talukdar.
Ebrahim Talukdar.

Falda union board.

Munshi Muhammad Shahbat Ali.
Munshi Easin Ali Sarkar.
Munshi Yonnos Ali Sarkar.
Babu Surendra Nath Bhaduri.
Doctor Bepin Behari Datta.
Munshi Jabed Ali Talukdar,

Mirzapur union board.

Munshi Khondokar Hatem Ali.
Munshi Naya Mia.
Maulvi Nasimuzzaman.
Babu Kali Nath Routh.
Babu Nripendra Narayan Ray.

Gobindasi union board.

Babu Dinesh Chandra Deb Ray.
Babu Jadab Chandra Basak.
Maulvi Akbar Husain Mia.
Munshi Golam Martuza Talukdar.
Munshi Aran Sarkar.
Munshi Shahebuddin Sarkar.

Shealkhole union board.

Babu Umesh Chandra Ghosh.
Babu Bharat Chandra Malakar.
Maulvi Ebrahim Khan.
Maulvi Nawab Ali Talukdar.
Munshi Moizuddin Khondokar.

Madhupur police-station.

Birtara union board.

Maulvi Ramjan Ali Talukdar.
Maulvi Md. Yonnon Ali.
Munshi Jonab Ali Fakir.
Babu Surendra Chandra Talukdar.
Babu Madhabendu Poddar.

Dhanbari union board.

Babu Shashi Mohan Talukdar.
Maulvi Mir Mahtab Ali.
Maulvi Golam Ahmad Siddiqui.
Munshi Mir Abdus Samad.
Munshi Khondokar Motasim Billa.

Paiska union board.

Maulvi Md. Habibur Rahman.
Maulvi Muhammad Ali.
Munshi Md. Nawsher Ali.
Munshi Shabefullah Sarkar.
Munshi Aman Ali Khan.
Munshi Umed Ali Sarkar.

Dhopakhali union board.

Munshi Haji Barkatuddin Sarkar.
Babu Krishna Chandra Datta.
Babu Jatindra Nath Sen.
Munshi Molfat Ali Khan.
Munshi Salimuddin Sarkar.

Madhupur union board.

Babu Durgesh Chandra Neogi.
Babu Purna Chandra De.
Hafez Maulvi Abdul Majid.
Munshi Mansoor Ali.
Munshi Ainuddin Sarkar.

2. This notification will take effect from the date of the first meeting of the reconstituted union boards at which a quorum is present.

Rajshahi-Malda.—No. 1988J. — 1st March 1935.—In exercise of the power conferred by sub-section (*1*) of section 13 of the Bengal, Agra and Assam Civil Courts Act, 1887 (XII of 1887), the Governor in Council is pleased to declare that the village specified in the following schedule should henceforth be excluded from the local limits of the Nawabganj munsifi and included within the local limits of the Malda Sadar munsifi in the district of Rajshahi-Malda :—

Schedule.

Name of village.		General jurisdiction list number of thana Shibganj.
Bairbona	..	10

Bankura.—No. 2043J.—2nd March 1935.—In exercise of the power conferred by section 65 of the Bengal Village Self-Government Act, 1919 (Bengal Act V of 1919), the Governor in Council is pleased to appoint the following members of the Belut-Rasulpur union board within the Patrasayer police-station in the Vishnupur subdivision of the Bankura district, to be, during their term of office as such members, a union bench within the jurisdiction of the said union board for the purposes of that section :—

Babu Guru Das Chakrabatti.

Babu Jamini Kanta Mukharji.

Babu Dharani Dhar Gupta.

Munshi Abdur Rashid.

This notification will take effect from the date of the first meeting of the reconstituted union board at which a quorum is present.

Bankura.—No. 2044J.—2nd March 1935.—In exercise of the power conferred by section 73 of the Bengal Village Self-Government Act, 1919 (Bengal Act V of 1919), the Governor in Council is pleased to appoint the following members of the Belut-Rasulpur union board within the Patrasayer police-station in the Vishnupur subdivision of the Bankura district, to be, during their term of office as such members, a union court within the jurisdiction of the said union board for the purposes of that section :—

Babu Guru Das Chakrabatti.

Babu Jamini Kanta Mukharji.

Babu Dharani Dhar Gupta

Munshi Abdur Rashid.

This notification will take effect from the date of the first meeting of the reconstituted union board at which a quorum is present.

Murshidabad.—No. 2047J.—2nd March 1935.—In exercise of the power conferred by section 65 of the Bengal Village Self-Government Act, 1919 (Bengal Act V of 1919), the Governor in Council is pleased to appoint the following members of the union boards mentioned below, to be, during their term of office as such members, union benches within the jurisdiction of the union boards of which they are, respectively, members for the purposes of that section :—

Murshidabad district.

Raghunathganj police-station.

Jarur union board.

Babu Sashi Bhusan Ray.
Babu Kali Kanta Das.
Babu Girija Bhusan Ray.
Munshi Saifuddin Mandal.
Munshi Abujan Sheikh.

Daffarpur union board.

Babu Kirit Bhusan Das.
Babu Kalipada Das.
Babu Mahesh Narain Das.
Munshi Monab Mandal.
Munshi Mahammad Musa.

2. This notification will take effect from the date of the first meeting of the reconstituted union boards at which a quorum is present.

Murshidabad.—No. 2048J.—2nd March 1935.—In exercise of the power conferred by section 73 of the Bengal Village Self-Government Act, 1919 (Bengal Act V of 1919), the Governor in Council is pleased to appoint the following members of the union boards mentioned below, to be during their term of office as such members, union courts within the jurisdiction of the union boards of which they are, respectively, members for the purposes of that section :—

Murshidabad district.

Raghunathganj police-station.

Jarur union board.

Babu Sashi Bhusan Ray.
Babu Kali Kanta Das.
Babu Girija Bhusan Ray.
Munshi Saifuddin Mandal.
Munshi Abujan Sheikh.

Daffarpur union board.

Babu Kirit Bhusan Das.
Babu Kalipada Das.
Babu Mahesh Narain Das.
Munshi Monab Mandal.
Munshi Mahammad Musa.

2. This notification will take effect from the date of the first meeting of the reconstituted union boards at which a quorum is present.

Tippera.—No. 2050J.—2nd March 1935.—In exercise of the power conferred by section 65 of the Bengal Village Self-Government Act, 1919 (Bengal Act V of 1919), the Governor in Council is pleased to appoint Maulvi Osman Miaji, a member of the Mohanpur union board within the Matlab police-station in the Chandpur subdivision of the Tippera district, to be, during his term of office as such member, a member of the union bench within the jurisdiction of the said union board for the purposes of that section, *vice* Babu Ambica Charan Sarkar, deceased.

Tippera.—No. 2051J.—2nd March 1935.—In exercise of the power conferred by section 73 of the Bengal Village Self-Government Act, 1919 (Bengal Act V of 1919), the Governor in Council is pleased to appoint Maulvi Osman Miaji, a member of the Mohanpur union board within the Matlab police-station in the Chandpur subdivision of the Tippera district, to be, during his term of office as such member, a member of the union court within the jurisdiction of the said union board for the purposes of that section, *vice* Babu Ambica Charan Sarkar, deceased.

T. ROXBURGH,
Secy. to the Govt. of Bengal (offg.).

LOCAL SELF-GOVERNMENT DEPARTMENT.

NOTIFICATIONS.

Minister-in-charge: The Hon'ble Sir Bijoy Prasad Singh Roy, Kt.

24-Parganas.—No. 1725M.—28th February 1935.—In exercise of the power conferred by section 312 (*1*) of the Bengal Municipal Act, 1932 (Bengal Act XV of 1932), and upon the application of Commissioners of the Tollyganj Municipality at a meeting, the Government of Bengal (Ministry of Local Self-Government) are pleased to declare that Schedule VI of that Act shall be in force in the said municipality.

24-Parganas.—No. 1726M.—28th February 1935.—In exercise of the power conferred by section 312 (*2*) of the Bengal Municipal Act, 1932 (Bengal Act XV of 1932), the Government of Bengal (Ministry of Local Self-Government) are pleased to extend the provisions of sections 324, 327 and 329 of the said Act to the Tollyganj Municipality in the district of the 24-Parganas.

24-Parganas.—No. 1727M.—28th February 1935.—In exercise of the power conferred by section 216 of the Bengal Municipal Act, 1932 (Bengal Act XV of 1932), and on the application of the Commissioners of the Tollyganj Municipality at a meeting, the Government of Bengal (Ministry of Local Self-Government) are pleased to extend the provisions of sections 217-220 and 223-229 of that Act to the said municipality.

24-Parganas. — No. 1744L.S.-G. — 1st March 1935.—In exercise of the power conferred by section 10A of the Bengal Local Self-Government Act of 1885 (Bengal Act III of 1885), the Government of Bengal (Ministry of Local Self-Government) are pleased to determine that the Muhammadan community in the area under the authority of the district board of the 24-Parganas and the local boards of Sadar, Barrackpore, Diamond Harbour and Basirhat subdivisions and the Hindu community in the area under the authority of the local board of the Baraset subdivision of the 24-Parganas district shall be deemed to be a minority community for the purposes of that section.

Murshidabad. — No. 1745L.S.-G. — 1st March 1935.—In exercise of the power conferred by section 10A of the Bengal Local Self-Government Act of 1885 (Bengal Act III of 1885), the Government of Bengal (Ministry of Local Self-Government) are pleased to determine that the Hindu community in the area under the authority of the district board of Murshidabad and the local boards of Sadar, Lalbagh and Jangipur subdivisions and the Muhammadan community in the area under the authority of the local board of the Kandi subdivision of the Murshidabad district shall be deemed to be a minority community for the purposes of that section.

Jessore. — No. 1746L.S.-G. — 1st March 1935.—In exercise of the power conferred by section 10A of the Bengal Local Self-Government Act of 1885 (Bengal Act III of 1885), the Government of Bengal (Ministry of Local Self-Government) are pleased to determine that the Hindu community in the area under the authority of the district board of Jessore and the local boards of Sadar, Magura, Narail, Bongaon and Jhenidah subdivisions of the Jessore district shall be deemed to be a minority community for the purposes of that section.

CORRIGENDUM.

Minister-in-charge: The Hon'ble Sir Bijoy Prasad Singh Roy, Kt.

No. 1722L.S.-G.—27th February 1935.—In the table appended to notification No. 6533-L.S.-G., dated the 1st December 1933, published at pages 59-77 of Part I of the *Calcutta Gazette*, dated the 18th January 1934, make the following correction:—

Page 70, column 3 of the table showing the mauzas constituting Govindapur union, *delete* Khanpur—106.

Medical.

Minister-in-charge: The Hon'ble Sir Bijoy Prasad Singh Roy, Kt.

Dinajpur.—No. 867Medl. — 25th February 1935.—Temporary Assistant Surgeon Dr. Upendra Chandra Sarkar of the Sadar Hospital, Dinajpur, held charge of the duties of the Civil Surgeon, Dinajpur, in addition to his own and without any extra remuneration, for the period from the 1st January 1935 to the 15th January 1935.

Pabna.—No. 874Medl. — 25th February 1935.—Dr. Mithilesh Chandra Ghosh, officiating Civil Surgeon, Pabna, is confirmed in the grade of permanent Civil Surgeons, with effect from the 12th December 1934.

Calcutta.—No. 877Medl. — 25th February 1935.—Lt.-Col. H. E. Murray, M.D., M.C.H., I.M.S., is confirmed in the post of Surgeon Superintendent, Presidency General Hospital, Calcutta, with effect from the 1st December 1933, *vice* Lt.-Col. A. H. Proctor, I.M.S.

Calcutta.—No. 912Medl. — 26th February 1935.—Dr. Satya Charan Sen, M.B., D.T.M. (Cal.), Demonstrator of Physiology, Medical College, Calcutta, is appointed as Assistant Professor of Physiology, *vice* Dr. Lal Mohan Ghosal, due to retire on the 28th February 1935.

Calcutta.—No. 913Medl. — 26th February 1935.—Dr. Haridas Banerjee, House Surgeon, Surgical Outdoor Department, Medical College Hospitals, Calcutta, is appointed to be 2nd House Surgeon, Eye Infirmary, Medical College Hospitals, Calcutta, *vice* temporary Assistant Surgeon Dr. Rohini Ranjan Barua.

Calcutta.—No. 914Medl. — 26th February 1935.—Temporary Assistant Surgeon Dr. Rohini Ranjan Barua, officiating as 2nd House Surgeon, Eye Infirmary, on relief, is appointed to officiate as 1st House Surgeon of the same institution, *vice* Dr. Probhat Kumar Biswas.

Calcutta.—No. 915Medl. — 26th February 1935.—Dr. Probhat Kumar Biswas, 1st House Surgeon, Eye Infirmary, on relief, is appointed as Registrar and Refraction Assistant of the same institution, *vice* Dr. Md. Refatullah.

Calcutta.—No. 916Medl. — 26th February 1935.—Dr. Md. Refatullah, Registrar and Refraction Assistant, Eye Infirmary, on relief, is appointed as Resident Medical Officer of the same institution, *vice* Dr. Hemanta Kumar Indra.

Calcutta-Howrah. — No. 917Medl. — 26th February 1935.—Dr. Hemanta Kumar Indra, Resident Medical Officer, Eye Infirmary, Medical College Hospitals, Calcutta, on relief, is appointed as 1st Resident Assistant Surgeon, Howrah General Hospital, *vice* Dr. Jyoti Prosad Mitra.

Howrah.—No. 918Medl. — 26th February 1935.—Dr. Jyoti Prosad Mitra, 1st Resident Assistant Surgeon, Howrah General Hospital, on relief, is posted to the Uluberia subdivision and dispensary, *vice* temporary Assistant Surgeon Dr. Jitendra Mohan Chakraverty.

Chittagong Hill Tracts.—No. 985Medl.—4th March 1935.—Dr. Narendra Nath Ghosh, officiating Civil Surgeon, Chittagong Hill Tracts, is granted leave on average pay for one month, under rule 81(*b*) (*ii*) of the Fundamental Rules, in extension of the leave already granted to him in this department notification No. 4050-Medl., dated the 22nd December 1934.

Calcutta.—No. 991Medl.—4th March 1935. —Dr. Sukumar Bhattacharyya, a Demonstrator of Physiology, Medical College, Calcutta, is granted "earned leave" for the period from the 3rd February 1935 to the 2nd March 1935, under rule 10 of the Bengal Services Revision of Leave Rules, 1934, in extension of the leave already granted to him in this department notification No. 430Medl., dated the 6th February 1935.

NOTIFICATIONS.

No. 951Medl.—28th February 1935. — The Government of Bengal are pleased to direct that the following amendments be made to statutes 7 and 8 of the Statutes of the State Medical Faculty of Bengal, published under Government resolution No. 2545Medl., dated the 11th August 1914, at pages 1553-62 of Part I of the *Calcutta Gazette* of the 12th idem, as subsequently amended, namely:—

(*i*) In statute 7, *delete* the words "the Primary, Intermediate and Final" before the word "Examinations" in paragraph 1.

(*ii*) In statute 8, *for* the words "subjects of the Primary, Intermediate and Final Examinations" *substitute* the words "subjects of all the examinations."

Minister-in-charge: The Hon'ble Sir Bijoy Prasad Singh Roy, Kt.

No. 974Medl.—4th March 1935.—The following draft of a notification, which the Government of Bengal (Ministry of Local Self-Government), propose to issue in exercise of the power conferred by clause (*k*) of section 138 of the Bengal Local Self-Government Act of 1885 (Bengal Act III of 1885), is published for the information of persons likely to be affected thereby.

2. The draft will be taken into consideration on or after the 30th March 1935, and any objection or suggestion with respect thereto which may be received by the undersigned before that date will be duly considered:—

Draft Notification.

In exercise of the power conferred by clause (*k*) of section 138 of the Bengal Local Self-Government Act of 1885 (Bengal Act III of 1885), the Government of Bengal (Ministry of Local Self-Government) are pleased to make the following amendment in the rules for the control and administration of hospitals and dispensaries following systems of medicines other than Allopathic, published under Government notification No. 1504 Medl., dated the 30th May 1921, namely:—

To rule 26 of the said rules *add* the following:—

"District boards are however authorised, if they so desire, to levy charges, at rates to be fixed by them, from every patient attending a district board dispensary, provided that fees shall not be levied from patients in poor and indigent circumstances."

G. S. DUTT,
Secy. to the Govt. of Bengal.

Public Health.

NOTIFICATIONS.

Minister-in-charge: The Hon'ble Sir Bijoy Prasad Singh Roy, Kt.

No. 532P.H.—28th February 1935. — Mr. B. N. Mazumdar, Executive Engineer, Western Division, Public Health Department, Bengal, is allowed leave on average pay for four months, with effect from the 18th March 1935, or any subsequent date on which he may avail himself of the leave, under rule 81 (*b*) (*ii*) of the Fundamental Rules.

No. 533P.H.—28th February 1935. — Mr. S. C. Ghose, A.M.I.Mech.E., M.R.San.I., A.M.I.E. (Ind.), Assistant Engineer, Public Health Department, Bengal, is appointed to act as Executive Engineer, Western Division, during the absence of Mr. B. N. Mazumdar, on leave, or until further orders.

No. 534P.H.—28th February 1935. — Mr. G. C. Banerjee is appointed to act as Assistant Engineer, Public Health Department, Bengal, *vice* Mr. S. C. Ghose.

H. R. WILKINSON,
Secy. to the Govt. of Bengal.

Orders by the Director of Public Health, Bengal.

No. 2927A.—1st March 1935.—Babu Tarak Nath Sen Gupta, Assistant Analyst, Calcutta Public Health Laboratory, is allowed an extension of leave on average pay for fifteen days, with effect from the 1st March 1935, in continuation of the leave previously granted to him, under article 81 (*b*) (*ii*) of the Fundamental Rules.

R. B. KHAMBATA,
Director of Public Health, Bengal.

EDUCATION DEPARTMENT.

NOTIFICATIONS.

Minister-in-charge: The Hon'ble Khan Bahadur M. Azizul Haque.

Calcutta.—No. 859Edn.—1st March 1935.—Dr. Surendra Nath Das Gupta, Principal, Sanskrit College, Calcutta, is allowed leave out of India, Ceylon or Nepal, on average pay for the period from the 11th March to the 18th April 1935 and again for the period from the 2nd to the 11th July 1935, under the proviso to rule 81(*b*) (*ii*) of the Fundamental Rules, with the summer vacation of the College extending from the 19th April to the 1st July 1935 included between the two periods of leave, under rule 82(*d*) of those Rules.

Calcutta.—No. 862Edn.—1st March 1935.—Dr. Nripendra Kumar Datta, Professor of History, Sanskrit College, Calcutta, is appointed to act as Principal of the College, in addition to his own duties and on his own pay in the Bengal Educational Service, with effect from the 11th March 1935, during the absence, on leave, of Dr. Surendra Nath Das Gupta, or until further orders.

Dacca-Presidency Divn.—No. 865Edn.—1st March 1935.—Maulvi Aftabuddin Ahmed is appointed as District Inspector of Schools, Dacca, with effect from the date on which he joins the appointment on being relieved of his present officiating appointment as Second Inspector of Schools, Presidency Division, *vice* Maulvi Mukhleswar Rahman, transferred.

Dacca.—No. 866Edn.—1st March 1935.—Maulvi Ataur Rahman, Subdivisional Inspector of Schools, Dacca, is appointed to act in the Bengal Educational Service as District Inspector of Schools, Dacca, with effect from the date on which he joined the appointment, pending the arrival of Maulvi Aftabuddin Ahmad.

No. 872Edn.—4th March 1934.—In exercise of the power conferred by rule 41 read with rule 7 of the Civil Services (Classification, Control and Appeal) Rules, the Government of Bengal (Ministry of Education) are pleased to make the following amendment in the Rules for the departmental examination for educational officers in Account Rules and Practice, published under notification No. 4382Edn., dated the 8th November 1927, namely:—

In rule 1 of the said rules after the words, letter and brackets "(*v*) Assistant Inspectresses of Schools" *insert* the following:—

"(*vi*) Assistant Inspectors of Schools for Muhammadan Education".

No. 874Edn. — 4th March 1935. — The following draft of a notification, which the Government of Bengal (Ministry of Education) propose to issue in exercise of the powers conferred by clause (*i*) of sub-section (*2*) of section 66 of the Bengal (Rural) Primary Education Act, 1930 (Bengal Act VII of 1930), is published for the information of the persons likely to be affected thereby.

2. The draft will be taken into consideration on or after the 8th April 1935, and any objection or suggestion with respect thereto which may be received by the undersigned before that date will be duly considered:—

Draft Notification.

In exercise of the powers conferred by clause (*i*) of sub-section (*2*) of section 66 of the Bengal (Rural) Primary Education Act, 1930 (Bengal Act VII of 1930), the Government of Bengal (Ministry of Education) are pleased to make the following amendment in the rules regarding the manner of election of members of District School Board under clause (*g*) of section 6 of the said Act, published with this department notification No. 3343Edn., dated the 29th November 1933, as subsequently amended:—

In rule 14 of the said rules, *for* the words "of the time fixed for the commencement of the polling" *substitute* the following, namely:—

"mentioned in the notice referred to in rule 13."

Registration.

NOTIFICATION.

Minister-in-charge: The Hon'ble Khan Bahadur M. Azizul Haque.

Dacca-Faridpur. — No. 210Regn. — 28th February 1935.—Maulvi Saiyid Abu Saiyid Muhammad Taifoor, Sub-Registrar of Narainganj, in the district of Dacca, is appointed to act as District Sub-Registrar of Faridpur, with effect from the 16th March 1935, or the date on which he joins the appointment, *vice* Maulvi Dilwar Ali Khan, about to retire.

H. R. WILKINSON,
Secy. to the Govt. of Bengal.

Orders by the Director of Public Instruction, Bengal.

Bengal Educational Service.

Tippera-Chittagong.—No. 13B.—16th February 1935.—Babu Dwijendra Nath Dutta Chaudhury, District Inspector of Schools, Tippera (under orders of transfer to Chittagong), in the Bengal Educational Service, is granted, under Fundamental Rule 81 (*b*) (*ii*), leave on average pay for one month in extension of the leave granted to him in this office notification No. 82B., dated the 18th December 1934.

J. M. BOTTOMLEY,
Director of Public Instruction, Bengal.

Orders by the Inspector-General of Registration, Bengal.

Bakarganj.—No. 76.—25th February 1935.—This department notification No. 58, dated the 19th February 1935, appointing Maulvi Md. Velayetali Khan, Sub-Registrar attached to Bakarganj, to act as Joint Sub-Registrar of Barhanuddin Havildar's Hat at Tazmuddin in the same district is cancelled.

Mymensingh-Bogra.—No. 77.—25th February 1935.—Babu Radhaballav Banik, Sub-Registrar, on leave, is appointed to be Sub-Registrar of Durgapur, in the district of Mymensingh.

This cancels this department notification No. 547, dated the 20th November 1934, appointing him to be the Sub-Registrar of Khetlal, in the district of Bogra.

24-Parganas.—No. 78.—27th February 1935. —Maulvi Ahmad Ali, No. I, Sub-Registrar of Bishnupur, in the district of the 24-Parganas, is appointed to be Sub-Registrar of Magrahat in the same district.

24-Parganas.—No. 79.—27th February 1935. —Babu Sanat Kumar Nag Chaudhuri, officiating Sub-Registrar of Magrahat, in the district of the 24-Parganas, is appointed to be Sub-Registrar of Bishnupur in the same district.

24-Parganas.—No. 80.—27th February 1935. —Babu Nakuleshwar Chakrabutti, Sub-Registrar attached to Alipore, in the district of the 24-Parganas, is allowed leave on average pay for twenty-one days, under rule 81 (*b*) (*ii*) of the Fundamental Rules, in extension of the leave granted to him in this department notification No. 39, dated the 5th February 1935.

Faridpur.—No. 81.—27th February 1935.— Babu Kalipada Basu Ray, Sub-Registrar of Kotalipara, in the district of Faridpur, is allowed leave on average pay for four months' under rule 81(*b*) (*ii*) of the Fundamental Rules, with effect from the 11th March 1935, or from any subsequent date on which he may be relieved.

Faridpur.—No. 82.—27th February 1935.— Babu Ratindra Nath Biswas, Sub-Registrar attached to Faridpur, is appointed to act as Sub-Registrar of Kotalipara in the same district, with effect from the date on which he joins the appointment, during the absence, on leave, of Babu Kalipada Basu Ray, Sub-Registrar, or until further orders.

24-Parganas.—No. 83.—27th February 1935. —Babu Abani Bhusan Chakrabutti, Sub-Registrar of Kakdip, in the district of the 24-Parganas, is appointed to be Sub-Registrar of Habra in the same district, *vice* Sahibzada Fateh Muhammad Sahah, about to retire.

24-Parganas.—No. 84.—27th February 1935. —Babu Ramesh Chandra Das Gupta, Sub-Registrar attached to Alipore, 24-Parganas, is appointed to be Sub-Registrar of Kakdip in the same district.

Rangpur.—No. 85.—28th February 1935.— Babu Suresh Chandra Lahiri, Sub-Registrar of Sundarganj, in the district of Rangpur, is allowed leave on average pay for four months, under rule 81(*b*) (*ii*) of the Fundamental Rules, with effect from the date on which he may be relieved.

Rangpur-Mymensingh. — No. 86. — 28th February 1935.—Babu Abala Kanta Bhaduri, Sub-Registrar attached to Mymensingh, is appointed to act as Sub-Registrar of Sundarganj, in the district of Rangpur, with effect from the date on which he joins the appointment, during the absence, on leave, of the permanent incumbent, or until further orders.

Rangpur.—No. 87. — 1st March 1935.— Maulvi Md. Azfar, Sub-Registrar of Domar, in the district of Rangpur, is allowed leave on average pay for eight days, under rule 81 (*b*)(*ii*) of the Fundamental Rules, from the 31st January 1935 to the 7th February 1935 (both the days inclusive).

Dinajpur.—No. 88. — 2nd March 1935.— Late Babu Priya Gopal Chaki, formerly Sub-Registrar of Lahirihat, in the district of Dinajpur, is allowed leave on half average pay for two months and seven days, under rule 81(*d*) of the Fundamental Rules, in extension of the leave granted to him in this department notification No. 328, dated the 21st June 1934.

Bakarganj.—No. 89.—2nd March 1935.— Babu Asita Ranjan Chaudhuri, Sub-Registrar of Matbaria, in the district of Bakarganj, is allowed leave on average pay for one month and thirteen days, under rule 81(*b*)(*ii*) of the Fundamental Rules, with effect from the 9th February 1935.

Bakarganj.—No. 90.—2nd March 1935.— Maulvi Md. Velayet Ali Khan, Sub-Registrar attached to Barisal, in the district of Bakarganj, is appointed to act as Sub-Registrar of Matbaria in the same district, with effect from the 19th February 1935, during the absence, on leave, of Babu Asita Ranjan Chaudhuri, Sub-Registrar, or until further orders.

S. AHMED,

Inspector-General of Regn., Bengal.

COMMERCE DEPARTMENT.

NOTIFICATIONS.

No. 2596Com.—2nd March 1935.—Mr. W. Garner, Inspector of Boilers, Bengal, is allowed leave out of India on average pay for eight months, under rule 81 (*b*) (*i*) of the Fundamental Rules, with effect from the 5th April 1935, or from any subsequent date on which he may avail himself of it.

No. 2600Com.—2nd March 1935.—Mr. J. Hamilton, Inspector of Boilers, Bengal, is allowed leave out of India for eight months on average pay, under rule 81 (*b*) (*i*) of the Fundamental Rules, with effect from the 1st April 1935, or from any subsequent date on which he may avail himself of it.

D. GLADDING,

Secy. to the Govt. of Bengal.

MARINE DEPARTMENT.

NOTIFICATIONS.

No. 8Mne.—1st March 1935.—It is hereby notified under the provisions of section 6 of the Calcutta Port Act, 1890, that Mr. W. Hunter of Messrs. Gillanders Arbuthnot and Company has been elected by the Bengal Chamber of Commerce to be a Commissioner for the Port of Calcutta, *vice* the Hon'ble Mr. S. D. Gladstone, resigned.

No. 7Mne.—27th February 1935.—The following draft of rules, which, in exercise of the powers conferred by clause (*h*) of sub-section (*2*) of section 52 of the Inland Steam Vessels Act, 1917 (I of 1917), the Governor in Council proposes to make for regulating the towing of vessels carrying petroleum, other than dangerous petroleum, in bulk, either alongside or astern, by inland steam or motor vessels, in supersession of the rules, published under this department notification No. 20-Mne., dated the 10th June 1932, is published for the information of persons likely to be affected thereby.

The draft rules will be taken into consideration on or after the 8th April 1935, and any objection or suggestion with respect thereto received by the undersigned before that date will be considered :—

Draft Rules.

1. An inland steam or motor vessel shall not proceed on any voyage with a flat, barge, boat or other vessel in tow either alongside or astern in which petroleum, other than dangerous petroleum, in bulk is carried, unless the vessel being towed has a certificate of inspection issued under these rules: provided that the provisions of this rule shall not apply to vessels licensed by the Port Commissioners in accordance with the rules framed under clauses (*eee*) and (*k*) of sub-section (*1*) of section 6 of the Indian Ports Act, 1908.

2. All flats, barges, boats and other vessels intended for the carriage of petroleum, other than dangerous petroleum, in bulk shall be inspected once a year, for which purpose the vessel shall be placed on blocks of sufficient height on the foreshore to enable the Surveyor to examine the whole of the hull, seams and riveting.

3. Inspection shall be held whenever applied for by the owner or agent of the vessel. Every application for inspection shall be made to the Chief Surveyor at the nearest place of inspection and shall be made at least three clear days before the day on which it is desired that the inspection shall take place, on a printed form prescribed in Appendix A to these rules, which will be supplied for the purpose at the Surveyor's office. The applicant shall at the same time pay the requisite fee.

4. Upon receipt of an application in the prescribed form, the Surveyor will fix the date and hour for such inspection and shall communicate the same to the applicant.

5. The Surveyor shall satisfy himself that the vessel conforms to the specification of towed barges given in Appendix B to these rules and is in every respect fit for the purpose intended.

6. On the satisfactory completion of the inspection a certificate in the form prescribed in Appendix C to these rules will be granted by the Principal Engineer and Ship Surveyor, Calcutta, or the Engineer and Ship Surveyor, Chittagong, as the case may be, to the effect that the vessel is suitable for the carriage of petroleum, other than dangerous petroleum, in bulk.

7. A fee at the following rates shall be payable in respect of each inspection:—

Gross tonnage of barge, flat, etc.	Fee generally chargeable subject to the enhancements in columns 3 to 6.	Extra for Sundays, New Year's Day, Good Friday, Christmas Day and the day notified for observing the birthday of the King Emperor.	Extra for detention of Surveyor at the request of the shipowner or agent after 5 p.m. to complete an inspection undertaken during office hours.		Extra for cases in which a Surveyor is called upon to undertake an inspection after 5 p.m. and before 7 a.m.
			If detained between the hours of 5 p.m. and 6 p.m.	If detained after 6 p.m.	
1	2	3	4	5	6
	Rs. a. p.				
Not exceeding 25 tons ..	30 0 0				
Exceeding 25 tons but not exceeding 50 tons.	37 8 0				
Exceeding 50 tons but not exceeding 75 tons.	45 0 0				
Exceeding 75 tons but not exceeding 100 tons.	52 8 0	Rs. 25 per vessel.	Rs. 12-8	Rs. 25.	Rs. 25 per vessel.
Exceeding 100 tons but not exceeding 300 tons.	60 0 0				
Exceeding 300 tons but not exceeding 600 tons.	67 8 0				
Exceeding 600 tons but not exceeding 900 tons.	75 0 0				
Exceeding 900 tons but not exceeding 1,200 tons.	90 0 0				

8. The load of any such flat, barge, boat or other vessel shall not exceed 650 tons.

9. Every such flat, barge, boat or other vessel shall be fitted with a flatsaff on which a retd flag, measuring not less than 4 feet × 4 feet, shall be exhibited except when the vessel is certified "gas free."

No cargo other than non-dangerous petroleum shall be carried in those vessels or on the decks thereof unless the vessels are certified "gas free."

Every such vessel used for the transport of petroleum, other than dangerous petroleum, shall be supplied with two substantial receptacles each containing not less than 5 cubic feet of sand and an implement for distributing the same when required.

10. Every such flat, barge, boat or other vessel when used for the transport of petroleum, other than dangerous petroleum, shall have Plimsoll mark of the standard design placed amid ship on each side in such a position that when the centres of the discs are awash, the vessel will be loaded with the maximum cargo of non-dangerous petroleum allowed by these rules.

In no case shall the centre of the disc be less than 25 per cent. of the moulded depth below the deck line.

11. Rules 9 and 10 shall not apply to existing flats, barges, boats or other vessels built to carry non-dangerous petroleum in bulk where their application would necessitate structural alterations.

12. Any person committing a breach of any of the provisions of rules 1, 8, 9 and 10 shall be punished with imprisonment for a term which may extend to six months or with fine which may extend to five hundred rupees, or with both.

APPENDIX A.

(*See* rule 3.)

Application for the inspection of a *under rule 3 of the rules framed under section 52(2)(h) of the Inland Steam Vessels Act, 1917.*

1. Registered name or number of vessel.
2. Estimated gross tonnage.
3. Previous inspections, if any.
4. Date of proposed inspection.
5. Place where vessel can be found.

I hereby apply to you to make the necessary arrangements for the inspection of the vessel above named on the date and at the place stated, should the requirements of public service permit. I send Rs. in payment of the authorized fee and I also undertake to pay all expenses that may be incurred in the performance of the duty.

Station

Date

Owner or Agent.

APPENDIX B.

(*See* rule 5.)

Specification for towed barge to carry petroleum, other than dangerous petroleum, in bulk.

(*1*) *Dimensions.*—A barge intended to be used in inland waters for the carriage of petroleum, other than dangerous petroleum, in bulk shall be constructed within the following dimensions:—

Length 230 feet. Breadth 36·5 feet. Depth 9·5 feet.

(*2*) *Compartments.*—For all carrying capacities above 150 tons the barge shall be subdivided by transverse and longitudinal bulkheads so as to provide in the order named:—

(*a*) chain locker or fore peak of a length of at least 5 per cent. of the overall length of the barge;

(*b*) hold or store room;

(*c*) cofferdam;

(*d*) tanks in pairs with a maximum length of (27 feet), per tank;

(*e*) cofferdam;

(*f*) after peak of a length of at least 5 per cent. of the overall length of the barge.

(3) *Decks.*—Gas tight hatches of ample area shall be provided for easy access to each compartment raised on a coaming of at least two feet in depth. Manholes or similar hatches shall be provided for store rooms, cofferdam and peaks.

(4) Towing bitts or bollards shall be provided at convenient positions around the deck and these shall be close riveted to the stringer plate, or mounted on steel stools.

(5) Protected and approved ventilation shall be fitted to each compartment to the Surveyor's satisfaction.

(6) Each compartment to be supplied with a direct suction connection from the deck to which a portable hand pump may be affixed. Each barge shall be fitted with at least two efficient pumps.

(7) *Construction.*—The hull shall be constructed of steel in accordance with the latest approved practice and to classification requirements for scantlings.

All tank riveting shall be double and of approved pitch.

Suitable frames, stringers and keelsons shall be fitted throughout to the Surveyor's satisfaction.

(8) For all other constructional details the standard specification as approved by Classification Societies is to be followed.

APPENDIX C.

(*See* rule 6.)

Certificate of inspection for inland barge, flat, boat or other vessel carrying petroleum, other than dangerous petroleum, in bulk.

ISSUED UNDER THE RULES FRAMED UNDER SECTION 52(2)(*h*) OF THE INLAND STEAM VESSELS ACT, 1917.

To remain in force until the day of.....

Registered name or number of vessel.....

Owner or Agent.....

This is to certify that the abovenamed vessel has been inspected by me and is found suitable for the carriage of petroleum, other than dangerous petroleum, in bulk, as required under rule 1, Chapter II of Part II of rules framed under the Indian Petroleum Act, 1899, to regulate the importation, possession and transport of petroleum in the Presidency of Bengal.

Principal Engineer and Ship Surveyor, Calcutta.

Engineer and Ship Surveyor, Chittagong.

D. GLADDING,
Secy. to the Govt. of Bengal.

PUBLIC WORKS DEPARTMENT.

Establishment.

NOTIFICATION.

Minister-in-charge: The Hon'ble Nawab K. G. M. Faroqui, Khan Bahadur.

No. 136.—28th February 1935.—Babu Jogendra Kumar Guha, officiating Executive Engineer, Bakarganj Division, is allowed leave for two months and fifteen days from the 17th December 1934, viz., leave on average pay for thirty days from the 17th December 1934 to the 15th January 1935, under rule 81 (*b*) (*ii*) of the Fundamental Rules, and leave on average pay for one month and sixteen days from the 16th January 1935 to the 3rd March 1935, under rules 81 (*b*) (*ii*) and 86 (*b*) of the Fundamental Rules.

2. This supersedes this department notification No. 123, dated the 29th November 1934.

J. D. V. HODGE,
Secy. to the Govt. of Bengal.

DEPARTMENT OF AGRICULTURE AND INDUSTRIES.

Industries.

NOTIFICATION.

Minister-in-charge: The Hon'ble Nawab K. G. M. Faroqui, Khan Bahadur.

No. 1193Ind.—27th February 1935. — Mr. B. M. Das, Superintendent, Bengal Tanning Institute, is allowed leave on full pay for twelve days, under rule 103 of the Fundamental Rules, with effect from the date on which he may avail himself of it.

Co-operative Societies.

NOTIFICATION.

Minister-in-charge: The Hon'ble Nawab K. G. M. Faroqui, Khan Bahadur.

Dacca Divn.—No. 1129Co-op.—26th February 1935.—Khan Bahadur Maulvi Quamaruddin Ahmad, Assistant Registrar of Co-operative Societies, Dacca Division, is allowed leave on average pay for four months, viz., from 1st March 1935 to 30th June 1935 (both days inclusive), under rule 81 (*b*) (*ii*) of the Fundamental Rules.

Forests.

NOTIFICATIONS.

Buxa Divn.—No. 247For.—1st March 1935.—Mr. S. J. Curtis, I.F.S., Divisional Forest Officer, Buxa Division, is allowed leave on average pay for eight months, under rule 81 (*b*) (*i*) of the Fundamental Rules, with effect from the 1st March 1935, or any subsequent date on which he may avail himself of it.

Buxa Divn.—No. 248For.—1st March 1935.—Mr. J. C. Nath, I.F.S., Attached Officer, Buxa Forest Division, is posted to the charge of that division with headquarters at Baksa-Duar.

Chittagong Divn.—No. 249For.—1st March 1935.—Mr. V. S. Rao, I.F.S., Attached Officer, Chittagong Forest Division, is posted to the charge of the Southern Range Silvicultural Division with headquarters at Chittagong.

J. D. V. HODGE,
Secy. to the Govt. of Bengal.

Orders by the Registrar of Co-operative Societies, Bengal.

No. 56-L.—1st March 1935.—Whereas I am of opinion, as the result of an enquiry held into the constitution, working and financial condition of the Dinajpur Tinplate Workers' Co-operative Society, Limited (registered No. 236 of 1929), in the subdivision Sadar in the district of Dinajpur, under sub-section (*1*) of section 35 of the Co-operative Societies Act, II of 1912, that the society ought to be dissolved.

Now, therefore, in exercise of the power conferred by sub-section (*1*) of section 39 of the same Act, I hereby cancel the registration of the said society.

And further, in exercise of the power conferred by sub-section (*1*) of section 42 of the same Act, I hereby appoint the Inspector of Co-operative Societies, Dinajpur, to be liquidator of the said society.

No. 57-L.—1st March 1935.—Whereas I am of opinion, as the result of an enquiry held into the constitution, working and financial condition of the Char Kasimpur Purbapara Joutha Bank (registered No. 594 of 1927), in the subdivision Manikganj, in the district of Dacca, under sub-section (*1*) of section 35 of the Co-operative Societies Act, II of 1912, that the society ought to be dissolved.

Now, therefore, in exercise of the power conferred by sub-section (*1*) of section 39 of the same Act, I hereby cancel the registration of the said society.

And further, in exercise of the power conferred by sub-section (*1*) of section 42 of the same Act, I hereby appoint the Inspector of Co-operative Societies, Manikganj, to be liquidator of the said society.

No. 58-L.—1st March 1935.—Whereas I am of opinion, as the result of an enquiry held into the constitution, working and financial condition of the Bardiha Samabaya Samity (registered No. 62/Midnapore of 1931), in the subdivision Sadar in the district of Midnapore, under sub-section (*1*) of section 35 of the Co-operative Societies Act, II of 1912, that the society ought to be dissolved.

Now, therefore, in exercise of the power conferred by sub-section (*1*) of section 39 of the same Act, I hereby cancel the registration of the said society.

And further, in exercise of the power conferred by sub-section (*1*) of section 42 of the same Act, I hereby appoint the Departmental Officer in charge of Co-operative Societies, Midnapore Sadar Circle, to be liquidator of the said society.

No. 59-L.—1st March 1935.—Whereas I am of opinion, as the result of an enquiry held into the constitution, working and financial condition of the Belda Parulia Rindan Bank (registered No. 173/Midnapore of 1926), in the subdivision Contai in the district of Midnapore, under sub-section (*1*) of section 35 of the Co-operative Societies Act, II of 1912, that the society ought to be dissolved.

Now, therefore, in exercise of the power conferred by sub-section (*1*) of section 39 of the same Act, I hereby cancel the registration of the said society.

And further, in exercise of the power conferred by sub-section (*1*) of section 42 of the same Act, I hereby appoint the Departmental Officer in charge of Co-operative Societies, Contai, to be liquidator of the said society.

No. 60-L.—1st March 1935.—Whereas I am of opinion, as the result of an enquiry held into the constitution, working and financial condition of the Jamna Gramya Joutha Rindan Samity (registered No. 581 of 1910), in the subdivision Sadar in the district of Midnapore, under sub-section (*1*) of section 35 of the Co-operative Societies Act, II of 1912, that the society ought to be dissolved.

Now, therefore, in exercise of the power conferred by sub-section (*1*) of section 39 of the same Act, I hereby cancel the registration of the said society.

And further, in exercise of the power conferred by sub-section (*1*) of section 42 of the same Act, I hereby appoint the Departmental Officer in charge of Co-operative Societies, Midnapore Sadar Circle, to be liquidator of the said society.

No. 61-L.—1st March 1935.—Whereas I am of opinion, as the result of an enquiry held into the constitution, working and financial condition of the Tetulmuri Joutha Rindan Bank (registered No. 208/Midnapore of 1926), in the subdivision Contai in the district of Midnapore, under sub-section (*1*) of section 35 of the Co-operative Societies Act, II of 1912, that the society ought to be dissolved.

Now, therefore, in exercise of the power conferred by sub-section (*1*) of section 39 of the same Act, I hereby cancel the registration of the said society.

And further, in exercise of the power conferred by sub-section (*1*) of section 42 of the same Act, I hereby appoint the Departmental Officer in charge of Co-operative Societies, Contai, to be liquidator of the said society.

No. 62-L.—1st March 1935.—Whereas I am of opinion, as the result of an enquiry held into the constitution, working and financial condition of the Tallibari Samabaya Rindan Samiti (registered No. 7 of 1926), in the subdivision Nilphamari in the district of Rangpur, under sub-section (*1*) of section 35 of the Co-operative Societies Act, II of 1912, that the society ought to be dissolved.

Now, therefore, in exercise of the power conferred by sub-section (*1*) of section 39 of the same Act, I hereby cancel the registration of the said society.

And further, in exercise of the power conferred by sub-section (*1*) of section 42 of the same Act, I hereby appoint the Inspector of Co-operative Societies, Nilphamari, to be liquidator of the said society.

No. 63-L.—1st March 1935.—Whereas I am of opinion, as the result of an enquiry held into the constitution, working and financial condition of the Samlashir Joutha Bank (registered No. 280 of 1921), in the subdivision Sadar in the district of Dacca, under sub-section (*1*) of section 35 of the Co-operative Societies Act, II of 1912, that the society ought to be dissolved.

Now, therefore, in exercise of the power conferred by sub-section (*1*) of section 39 of the same Act, I hereby cancel the registration of the said society.

And further, in exercise of the power conferred by sub-section (*1*) of section 42 of the same Act, I hereby appoint the Inspector of Co-operative Societies, Dacca, to be liquidator of the said society.

No. 64-L.—1st March 1935.—Whereas I am of opinion, as the result of an enquiry held into the constitution, working and financial condition of the Tikarbaria Kalikahara Samabaya Bank (registered No. 35 of 1927), in the subdivision Berhampore in the district of Murshidabad, under sub-section (*1*) of section 35 of the Co-operative Societies Act, II of 1912, that the society ought to be dissolved.

Now, therefore, in exercise of the power conferred by sub-section (*1*) of section 39 of the same Act, I hereby cancel the registration of the said society.

And further, in exercise of the power conferred by sub-section (*1*) of section 42 of the same Act, I hereby appoint the Officer in charge of Co-operative Societies, Berhampore, to be liquidator of the said society.

No. 65-L.—1st March 1935.—Whereas I am of opinion, as the result of an enquiry held into the constitution, working and financial condition of the Ranaband Roman Catholic Bank No. I (registered No. 465 of 1909), in the subdivision Sadar in the district of Nadia, under sub-section (*1*) of section 35 of the Co-operative Societies Act, II of 1912, that the society ought to be dissolved.

Now, therefore, in exercise of the power conferred by sub-section (*1*) of section 39 of the same Act, I hereby cancel the registration of the said society.

And further, in exercise of the power conferred by sub-section (*1*) of section 42 of the same Act, I hereby appoint the Departmental Officer in charge of Co-operative Societies, Nadia, to be liquidator of the said society.

No. 66-L.—1st March 1935.—Whereas I am of opinion, as the result of an enquiry held into the constitution, working and financial condition of the Ukhura Joutha Samity (registered No. 7/Khulna of 1919), in the subdivision Sadar in the district of Khulna, under sub-section (*1*) of section 35 of the Co-operative Societies Act, II of 1912, that the society ought to be dissolved.

Now, therefore, in exercise of the power conferred by sub-section (*1*) of section 39 of the same Act, I hereby cancel the registration of the said society.

And further, in exercise of the power conferred by sub-section (*1*) of section 42 of the same Act, I hereby appoint the Departmental Officer in charge of Co-operative Societies, Khulna, to be liquidator of the said society.

No. 67-L.—1st March 1935.—Whereas I am of opinion as the result of an enquiry held into the constitution, working and financial condition of the Jugipukuria Joutha Bank (registered No. 44 of 1926), in the subdivision Satkhira in the district of Khulna, under sub-section (*1*) of section 35 of the Co-operative Societies Act, II of 1912, that the society ought to be dissolved.

Now, therefore, in exercise of the power conferred by sub-section (*1*) of section 39 of the same Act, I hereby cancel the registration of the said society.

And further, in exercise of the power conferred by sub-section (*1*) of section 42 of the same Act, I hereby appoint the Departmental Officer in charge of Co-operative Societies, Raruli, to be liquidator of the said society.

No. 68-L.—1st March 1935.—Whereas I am of opinion, as the result of an enquiry held into the constitution, working and financial condition of the Thakurdas Rural Co-operative Bank (registered No. 728 of 1910), in the subdivision Basirhat in the district of 24-Parganas, under sub-section (*1*) of section 35 of the Co-operative Societies Act, II of 1912, that the society ought to be dissolved.

Now, therefore, in exercise of the power conferred by sub-section (*1*) of section 39 of the same Act, I hereby cancel the registration of the said society.

And further, in exercise of the power conferred by sub-section (*1*) of section 42 of the same Act, I hereby appoint the Inspector of Co-operative Societies, Basirhat, to be liquidator of the said society.

A. M. ARSHADALI,
Regr., Co-operative Societies, Bengal (offg.).

REVENUE DEPARTMENT.

Land Revenue.

NOTIFICATIONS.

Burdwan.—No. 3409L.R. — 2nd March 1935.—In exercise of the power conferred by section 103B, sub-section (*3*) of the Bengal Tenancy Act, 1885 (Act VIII of 1885), and in continuation of notification No. 5970L.R., dated the 19th May 1933, published at pages 783-786, Part I of the *Calcutta Gazette* of the 25th May 1933, the Governor in Council is pleased to declare that a record-of-rights has been finally published under section 103A, sub-section (*2*) of the said Act in respect of the remaining villages in police-stations Ausgram, Mangalkote, Ketugram, Katwa, Jamalpur and Memari in the district of Burdwan.

Hooghly-Malda.—No. 3411L.R.—2nd March 1935.—Babu Profulla Chandra Mitra, Sub Deputy Collector, Hooghly, is, in the interest of public service, appointed to be an Assistant Settlement Officer in the district of Malda, with effect from the date on which he joins his settlement duties in that district.

Malda.—No. 3411½L.R.—2nd March 1935.—Under the provisions of section 3 (*14*) of the Bengal Tenancy Act, 1885 (Act VIII of 1885), Babu Profulla Chandra Mitra, Sub-Deputy Collector, is authorised to discharge, in the district of Malda, the functions of a Revenue Officer, under Chapter X of that Act, so far as they relate to surveys and the preparation of record-of-rights.

He is also vested with the powers of an Assistant Settlement Officer, under Chapter VII, Part I, of the rules under the Bengal Tenancy Act, in respect of the aforesaid area.

Land Acquisition.

NOTIFICATIONS.

Calcutta.—No. 3385L.A.—2nd March 1935. —The following Agreement is published under section 42 of the Land Acquisition Act, I of 1894, for general information.

O. M. MARTIN,

Secy. to the Govt. of Bengal.

Stamp
12 annas.

Agreement.

MEMORANDUM OF AGREEMENT made this twenty-seventh day of February, one thousand nine hundred and thirty-five between the Calcutta Electric Supply Corporation, Limited, a Company incorporated in England and having its registered office at Victoria House, Vernon Place, Bloomsbury Square, London, and a branch office at Victoria House, Chowringhee Square, in Calcutta (hereinafter called "the Company") of the one part and the Secretary of State for India in Council (hereinafter called "the Secretary of State") of the other part.

WHEREAS for the purpose of the construction of an additional Power Station for public supply of electric energy the Company has applied to the Government of Bengal for the acquisition under the provisions of the Land Acquisition Act, I of 1894, of the piece or parcel of land containing an area of forty-three decimal sixty-two acres or thereabouts situate on the east bank of the river Hooghly in village Mulajore in the district of the 24-Parganas and more particularly described in the Schedule hereto and delineated in the plan* hereunto annexed.

AND WHEREAS the said Government of Bengal being satisfied by an enquiry held under section 40 of the said Act that the proposed acquisition is needed for the aforesaid purpose and that the said work is likely to prove useful to the public has consented to acquire on behalf of the Company the piece or parcel of land hereinbefore described.

AND WHEREAS the said Government of Bengal has required the Company under the provisions of section 41 of the abovementioned Act to enter into the agreement with the Secretary of State hereinafter contained.

NOW THIS INDENTURE WITNESSETH that it is hereby agreed and declared as follows:—

(1) On demand the Company shall and will pay to the said Government of Bengal all and every compensation in respect of the said land tendered paid or awarded or to be tendered paid or awarded by the Collector under the Land Acquisition Act, 1894, or by the Court to which a reference under Part III of the said Act may be made, or by the Court or Courts to which an appeal from the award of the said Court may be preferred and all costs, charges and expenses of the proceedings in the aforesaid Courts or otherwise incidental to the proposed acquisition or payable in respect thereof under the provisions of the said Act.

(2) On demand made by the said Collector, the obligations of the Company under the last preceding clause not being thereby limited, the Company shall and will deposit with the said Collector such sum or sums of money as in his discretion the said Collector may in anticipation estimate to be necessary for the purposes mentioned in the last preceding clause.

(3) On payment by the Company of all demands under the foregoing first clause or in the discretion of the said Government of Bengal (on deposit by the Company of all estimated amounts as provided in the second clauses) but not before possession shall have been taken under the provisions of the abovementioned Act, the Secretary of State shall make over possession of the said land to the Company and shall execute and do all such acts and deeds as may be necessary and proper for effectually vesting the same in the Company.

(4) The said land shall be held by the Company for the purposes of such a Power Station as is hereinbefore mentioned and without the sanction in writing of the said Government of Bengal first had and obtained for no other purpose whatsoever.

(5) The first portion of the said Power Station shall be completed and fully equipped in all respects ready for use within five years from the date on which possession of the said land shall have been given to the Company. The remainder will be completed and equipped as and when the public demand for electric energy requires.

(6) Should the first portion of the said Power Station not be completed and fully equipped in all respects ready for use within the period stated in the last preceding clause or within such further period as in its discretion may be prescribed or allowed by the said Government of Bengal or should the said land at any time thereafter cease for a period of twenty-four consecutive months to be held and used or cease to be required for the purpose or purposes provided for in the foregoing fourth clause then and in any such case the said Government may summarily re-enter upon and take possession of the said land together with all buildings thereon, whether such buildings were erected before or after transfer of the land to the Company, and thereupon the interest of the Company in the said land and buildings shall absolutely cease and determine.

*Not printed herewith, but may be inspected in the office of the Special Land Acquisition Officer, Alipore, 24-Parganas.

7. On taking such possession the said Government may sell or otherwise deal with the said land and buildings as it may think proper.

(*i*) Should the said Goverment sell the land with the buildings, the said Government after deducting the expenses incurred in connection with the said taking of possession and with such sale shall pay the proceeds to the Company.

(*ii*) Should the said Government decide not to sell the land and buildings the said Government shall retain the said land and buildings thereon in which case the Secretary of State shall repay to the Company the market value as on the day of re-entry of all the buildings erected by the Company and all sums received from the Company in respect of all and every compensation as provided in the foregoing first clause (less the statutory allowance of 15 per cent. and less any amount received on account of trees and buildings which are not in existence at the time of resumption) but will not repay any sums paid and received on account of costs charges and expenses.

(*iii*) Should the said Government decide to sell the buildings only, upon such sale the Secretary of State shall after deducting the expenses of taking possession and selling, pay the balance of the proceeds of sale to the Company, together with the sum received from the Company in respect of the compensation for the land (less the statutory allowance of 15 per cent. and less any amount received from the Company on account of trees and buildings which are not in existence at the time of resumption) but will not repay any sum paid and received on account of costs charges and expenses.

(8) The public shall be entitled to use the work by the use of the electric energy to be supplied in accordance with the terms of the electric license held by the Company from the proposed Power Station to be erected on the said land.

(9) Should any dispute or difference arise touching or concerning the subject matter of this Agreement or any covenant clause or thing herein contained the same shall be referred to the said Government of Bengal and the opinion and decision of the said Government upon such dispute or difference shall be final and conclusive and binding on the parties hereto.

The Schedule above referred to.

Schedule.

ALL THOSE pieces or parcels of land containing 43·62 acres together forming two blocks lying on each side of Ghose Para Ghat Road and situate on the left bank of the river Hooghly in mauza Mulajore in sub-district Barrackpore in the district of the 24-Parganas in Bengal, comprising the settlement survey plots hereinafter set forth, and butted and bounded as follows:—

Northern Block:

Bounded on the north by Jungi Peer Tola Ghat Road up to its junction with Ferry Fund Road, and bounded on the east by the portion of Ferry Fund Road running from Jungi Peer Tola Ghat Road to Ghose Para Ghat Road and bounded on the south by Ghose Para Ghat Road (plot 161), but also partly bounded on the south towards the middle of the last mentioned road by six Hindu temples occupying plots 137, 138, 139, 140, 141, 142 and 162, partly fronting on such road, and bounded on the west by the river Hooghly.

This northern block comprises the following settlement survey plots:—

Plot number.	Khatian number.	Area in acres.
12/349	780	·12
12/350	334 and 371	·24
(Doba) 117	453	·13
118	465	4·05
(Pond) 119	465	·48
120	375	·09
121	377	·29
122	379	·11
125	450	·12
126	334	·48
127	450	·16
128	371	·26
	334	1·26
129	371	·15
	334	·76
130	371	·21
	334	1·03
131	371	·01
	334	·03
134	377	·49
135	385	·11
136	365	·81
143	457	·17
144	317/2 —	·43
118/1112	453	·44
118/1113	455	·50
136/1114	370	·29
122/1115	383	·07
		13·29 acres.

Southern Block:

Bounded on the north by Ghose Para Ghat Road but also bounded partly on the north towards the middle of that road by six Hindu temples occupying plots 155, 156, 157, 158, 159 and 160, partly fronting on such road, and bounded on the east by the portion of Ferry Fund Road running from Ghose Para Ghat Road to Sidhaswari Ghat Road and there bounded by plots 187 and 186 at the corner of Sidhaswari Ghat Road and then again bounded by Ferry Fund Road up to its junction with Ghorikhana Ghat Road and bounded on the south by the said Ghorikhana Ghat Road and bounded on the west by the river Hooghly.

This southern block comprises the following settlement survey plots:—

Plot number.	Khatian number.	Area in acres.
145	373	·20
146	387	·30
(Pond) 147	450	·19
148	450	1·33
(Pond) 149	450	·34
150	700	1·36
(Pond) 151	700	·10
152	700	·15
153	702	·10
154	702	·69
163	334 and 371	·04
165	334	1·86
	371	·39
166	334	·70
	371	·15
168	389	·16
169	391	·15
170	393	·15
171	334	4·07
	371	·84
172	395	·10
(Road) 173	780	·51
174	334	·09
	371	·01
175	334	1·22
	371	·24
176	381	·68
177	698	3·12
178	621	·60
179	695	·60
180	695	·12
(Pond) 181	695	·26
182	702	·20
183	702	·30
(Pond) 184	702	·12
185	702	·29
188	698	3·60
189	698	2·40
(Pond) 190	698	·37
154/224	397	·23
154/1116	704	2·00
		30·33 acres.

Total area (both blocks) 43·62 acres.

The boundaries and dimensions of the above-mentioned plots appear in the settlement survey map and are also shown in the plan hereto annexed.

IN WITNESS whereof the duly constituted attorneys of the Company and the Secretary of State for India in Council have hereunto set their respective hands and seals the day and year first above written.

Signed, sealed and delivered by Franklin Thomas Homan and James Parkinson, the duly constituted attorneys of and for the Calcutta Electric Supply Corporation, Limited, in the presence of—

W. L. Price,
Commercial Manager,
Calcutta Electric Supply Corporation, Ltd.,
Victoria House,
Calcutta.

For the Calcutta Electric Supply Corporation, Ltd., by its constituted attorneys—

(Sd.) F. T. Homan.
(Sd.) J. Parkinson.

Signed, sealed and delivered by Olaus Macleod Martin, Secretary to the Government of Bengal in the Revenue Department on behalf of the Secretary of State for India in Council in the presence of—

(Sd.) J. N. Sircar,
Assistant Secretary to the Government of Bengal,
Revenue Department.

(Sd.) O. M. Martin,
Secretary to the Government of Bengal Revenue Department.

Burdwan.—No. 3382L.A.—2nd March 1935.—Whereas it appears to the Governor in Council that land is likely to be required to be taken by Government at the public expense for a public purpose, viz., for constructing the approaches to 1:25 feet fall and bridge at mile 15, chainage 24 and 34 feet of distributary No. 6, main canal, Domodar Canal Project, in the village of Faridpur, jurisdiction list No. 127 in thana Burdwan, pargana Shahabad, district Burdwan, it is hereby notified that for the above purpose two pieces of land comprising parts of cadastral survey plot Nos. 1362, 1363, 2609-2613, and altogether measuring, more or less, 0·95 of an acre, are likely to be required within the aforesaid village of Faridpur.

This notification is made, under the provisions of section 4 of Act I of 1894, to all whom it may concern.

A plan of the land may be inspected in the office of the Special Land Acquisition Officer, Burdwan, as well as in that of the Executive Engineer, Damodar Canal Division, Burdwan.

In exercise of the powers conferred by the aforesaid section, the Governor in Council is pleased to authorise the officers for the time being engaged in the undertaking, with their servants and workmen, to enter upon and survey the land and do all other acts required or permitted by that section.

In exercise of the powers conferred by section 17 (*4*) of the Land Acquisition Act, I of 1894, as amended by Act XXXVIII of 1923, the Governor in Council is pleased to direct that the provisions of section 5A of the Act shall not apply in this case.

Calcutta.—No. 3396L.A.—2nd March 1935.—Whereas it appears to the Governor in Council that land is likely to be required to be taken by Government partly at the public expense and partly at the expense of the Jewish Girls' School, Calcutta, for a public purpose, viz., for the purpose of the Jewish Girls' School in ward No. 7 of the Calcutta Municipality, in the city of Calcutta, it is hereby notified that for the above purpose a piece of land comprising premises No. 1, Manook Lane, and measuring, more or less, 0·0719 of an acre, bounded on the—

North—By Manook Lane,

East and South—By premises No. 54, Ezra Street,

West—By premises No. 8A, and 8B, Pollock Street,

is likely to be required within the aforesaid ward No. 7 of the Calcutta Municipality in the city of Calcutta.

This notification is made, under the provisions of section 4 of Act I of 1894, to all whom it may concern.

A plan of the land may be inspected in the office of the Second Land Acquisition Collector at No. 5, Bankshall Street, Calcutta.

In exercise of the powers conferred by the aforesaid section, the Governor in Council is pleased to authorise the officers for the time being engaged in the undertaking, with their servants and workmen, to enter upon and survey the land and do all other acts required or permitted by that section.

Any person interested in the above land, who has any objection to the acquisition thereof, may, within thirty days after the date on which public notice of the substance of this notification is given in the locality, file an objection in writing before the Second Land Acquisition Collector at No. 5, Bankshall Street, Calcutta.

Nadia.—No. 3399L.A.—2nd March 1935.—The Governor in Council is pleased to cancel notification No. 5753L.A., dated the 7th May 1934, under section 4 of the Land Acquisition Act, I of 1894, published at page 689, Part I of the *Calcutta Gazette* of the 10th idem, in respect of the proposed acquisition of 3·73 acres of land required by the Krishnagar Municipality for the accommodation of the municipal methars' quarters, etc., in the village of Krishnagar, jurisdiction list No. 92, thana Krishnagar, pargana Ukhra, district Nadia.

Howrah.—No. 3427L.A.—4th March 1935.—Whereas it appears to the Governor in Council that land is likely to be required to be taken by Government at the expense of the Bally Municipality for a public purpose, viz., for a new road in extension of Ramanath Bhattacharjee Street Bye Lane in Ward No. III, in the village of Belur (Krishnachandrapur), jurisdiction list No. 12, thana Bali, pargana Boro, district Howrah, it is hereby notified that for the above purpose three pieces of land altogether measuring, more or less, 0·4133 of an acre, bounded on the:—

Plot No. 1:

North—By East Indian Railway land,

South—By the land of Mankumari Debi,

East—By the Grand Trunk Road,

West—By the municipal drain,

Plot No. 2:

North—By the East Indian Railway land,

South—By the land of Anil Kumar Mukherjee,

East—By the municipal drain,

West—By the East Indian Railway land and land of Anil Kumar Mukherjee,

Plot No. 3:

North—By the East Indian Railway land and land of Raja Peary Mohan Mukherjee,

South—By the land of Anil Kumar Mukherjee,

East—By the land of Raja Peary Mohan Mukherjee, Anil Kumar Mukherjee and municipal drain,

West—By municipal road, Ramanath Bhattacharjee Street and Ramanath Bhattacharjee Street Bye Lane,

are likely to be required within the aforesaid village of Belur (Krishnachandrapur).

This notification is made, under the provisions of section 4 of Act I of 1894, to all whom it may concern.

A plan of the land may be inspected in the office of the Collector of Howrah.

In exercise of the powers conferred by the aforesaid section, the Governor in Council is pleased to authorise the officers for the time being engaged in the undertaking, with their servants and workmen, to enter upon and survey the land and do all other acts required or permitted by that section.

Any person interested in the above land, who has any objection to the acquisition thereof, may, within thirty days after the date on which public notice of the substance of this notification is given in the locality, file an objection in writing before the Collector of Howrah.

Hooghly.—No. 3430L.A.—4th March 1935.—Whereas it appears to the Governor in Council that land is likely to be required to be taken by Government at the expense of the district board of Hooghly for a public purpose, viz., for hospital building in the village of Bhandarhati, jurisdiction list No. 119, thana Dhaniakhali, pargana Baligori, district Hooghly, it is hereby notified that for the above purpose a piece of land measuring, more or less, 2·805 acres, bounded on the—

North—By union board road, land and shops of Kali Pada Shaha and land of Amath Nath Choudhury and others,

South—By union board road and lands of Dulal Kewra, Banku Behari Modak, Anath Nath Choudhury and Kristo Chandra Choudhury,

East—By district board roadside land,

West—By land of Tincowri Ghose and Anath Nath Choudhury,

is likely to be required within the aforesaid village of Bhandarhati.

This notification is made, under the provisions of section 4 of Act I of 1894, to all whom it may concern.

A plan of the land may be inspected in the office of the Collector of Hooghly.

In exercise of the powers conferred by the aforesaid section, the Governor in Council is pleased to authorise the officers for the time

being engaged in the undertaking, with their servants and workmen, to enter upon and survey the land and do all other acts required or permitted by that section.

Any person interested in the above land, who has any objection to the acquisition thereof, may, within thirty days after the date on which public notice of the substance of this notification is given in the locality, file an objection in writing before the Collector of Hooghly.

24-Parganas. — No. 3436L.A.—4th March 1935.—Whereas it appears to the Governor in Council that land is likely to be required to be taken by Government at the expense of the Baranagar Municipality, for a public purpose, viz., for widening a portion of Mairadanga Road in the village of Baranagar, jurisdiction list No. 5, thana Baranagar, pargana Calcutta, district 24-Parganas, it is hereby notified that for the above purpose a piece of land comprising portions of cadastral plot Nos. 5850 and 5851, and measuring, more or less, 0·0027 of an acre, is likely to be required within the aforesaid village of Baranagar.

This notification is made, under the provisions of section 4 of Act I of 1894, to all whom it may concern.

A plan of the land may be inspected in the office of the Commissioners of the Baranagar Municipality.

In exercise of the powers conferred by the aforesaid section, the Governor in Council is pleased to authorise the officers for the time being engaged in the undertaking, with their servants and workmen, to enter upon and survey the land and do all other acts required or permitted by that section.

Any person interested in the above land, who has any objection to the acquisition thereof, may, within thirty days after the date on which public notice of the substance of this notification is given in the locality, file an objection in writing before the Collector of 24-Parganas.

Howrah.—No. 3439L.A.—4th March 1935. —Whereas it appears to the Governor in Council that land is likely to be required to be taken by Government at the expense of the Howrah Municipality for a public purpose, viz., for opening out a 6 feet drain off Chhattoo Lal Misir Road, in the village of Malipanchghara, jurisdiction list No. 4, thana Malipanchghara, pargana Boro, district Howrah, it is hereby notified that for the above purpose a piece of land measuring, more or less, 0·0175 of an acre, bounded on the—

North—By land and tank of Brahma Moyee Debya,

East—By land under acquisition for extension of Chhattoo Lal Misir Road,

South—By lands of Chhattoo Lal Misir and S. M. Jnanada Dassi,

West—By Chhattoo Lal Misir Road and municipal drain,

is likely to be required within the aforesaid village of Malipanchghara.

This notification is made, under the provisions of section 4 of Act I of 1894, to all whom it may concern.

A plan of the land may be inspected in the office of the Collector of Howrah.

In exercise of the powers conferred by the aforesaid section, the Governor in Council is pleased to authorise the officers for the time being engaged in the undertaking, with their servants and workmen, to enter upon and survey the land and do all other acts required or permitted by that section.

Any person interested in the above land, who has any objection to the acquisition thereof, may, within thirty days after the date on which public notice of the substance of this notification is given in the locality, file an objection in writing before the Collector of Howrah.

Faridpur. — No. 3445L.A. — 4th March 1935.—Whereas it appears to the Governor in Council that land is likely to be required to be taken by Government at the public expense for a public purpose, viz., for facility of local goods working at Ghewar Bazar No. 6 upper ghat of the Eastern Bengal Railway in the village of Daulatdia, jurisdiction list No. 240, thana Goalundo, parganas Baikunthapur and Mamudpur, district Faridpur, it is hereby notified that for the above purpose a piece of land measuring, more or less, 3·799 acres, bounded on the—

North—By the land of Kasimaddi Sardar,

East—By the lands of Felu Sardar, Ali Bepari, Saber Tendal, Ekai Molla, Tamijaddi Shaik, Mafu Pramanik, Eakub Sardar, Kabil Mistry, Hosen Thakur, Habej Molla, Darbesh Shaik, Habej Molla, Abdul Samed Khandakar, Rai Charan Mandal, Julmat Fakir, Bhasan Sardar, Dabir Fakir, Rahamat Habej, Abbaj Fakir, Ahmmadali Molla, Nakul Molla, Maniraddi Mandal, Taher Mandal, Dabir Mandal, Baser Molla, Bahadur Molla, Dudu Molla, Sefatulla Molla, Samir Molla, Abdul Sardar, Sabdul Sardar, Kedai Molla, Faijaddi Kerani, Bhasan Bepari, Kaser Peada, Julmat Sardar, Hakimali Bepari, Jahardi Sardar, Mahammadi Bepari, Naimaddi Sardar, Munser Molla, Kadir Mridha, Durga Nath Singha, Jadab Chandra Sarkar, Abhay Charan Biswas, Debnath Saidal, Durga Charan Biswas, Manik Saidal, Asananda Sardar, Jogyeswar Biswas, Jharu Biswas, Ram Nath Sarkar, Rash Behari Saidal, Gaya Nath Saidal, Nakul Saidal, Nazarali Mistry, Santo Biswas, Manik Saidal, Khalil Mistry, Jogeswar Biswas, Debnath Saidal, Madhu Mistry, Lokenath Biswas, Mokundo Sahari, Mokundo Biswas and Debnath Saidal,

South—By the land of Debnath Saidal,

West—By the land of Eastern Bengal Railway,

is likely to be required within the aforesaid village of Daulatdia.

This notification is made, under the provisions of section 4 of Act I of 1894, to all whom it may concern.

A plan of the land may be inspected in the office of the Subdivisional Officer of Goalundo at Rajbari.

In exercise of the powers conferred by the aforesaid section, the Governor in Council is pleased to authorise the officers for the time being engaged in the undertaking, with their servants and workmen, to enter upon and survey the land and do all other acts required or permitted by that section.

Any person interested in the above land, who has any objection to the acquisition thereof, may, within thirty days after the date on which public notice of the substance of this notification is given in the locality, file an objection in writing before the Collector of Faridpur.

Howrah.—No. 3448L.A.—4th March 1935. —Whereas it appears to the Governor in Council that land is likely to be required to be taken by Government at the expense of the district board of Howrah for a public purpose, viz., for extending the Narayani Balika Bidyalaya in the village of Jhikra, jurisdiction list No. 83, thana Amta, pargana Kharija Mandalghat, district Howrah, it is hereby notified that for the above purpose a piece of land measuring, more or less, 0·142 of an acre, bounded on the—

North—By tank and land of Satis Chandra Hazra and others,

South—By local board road,

East—By land of Bhupati Charan Karar and others,

West—By land of Sudhanya Samanta,

is likely to be required within the aforesaid village of Jhikra.

This notification is made, under the provisions of section 4 of Act I of 1894, to all whom it may concern.

A plan of the land may be inspected in the office of the Subdivisional Officer, Uluberia.

In exercise of the powers conferred by the aforesaid section, the Governor in Council is pleased to authorise the officers for the time being engaged in the undertaking, with their servants and workmen, to enter upon and survey the land and do all other acts required or permitted by that section.

Any person interested in the above land, who has any objection to the acquisition thereof, may, within thirty days after the date on which public notice of the substance of this notification is given in the locality, file an objection in writing before the Collector of Howrah.

Jalpaiguri. — No. 3454L.A. — 4th March 1935.—Whereas it appears to the Governor in Council that land is likely to be required to be taken by Government at the expense of Shikarpur Saldanga union board for a public purpose, viz., for construction of a charitable dispensary and quarters of Sub-Assistant Surgeon at Chhatra-Shikarpur, pargana Boda, zilla Jalpaiguri, it is hereby notified that for the above purpose a piece of land comprising cadastral plots Nos. 619 and 620, sheet No. 2, and measuring, more or less, 0·29 of an acre, is likely to be required within the aforesaid village of Chhatra-Shikarpur.

This notification is made, under the provisions of section 4 of Act I of 1894, to all whom it may concern.

A plan of the land may be inspected in the office of the Deputy Commissioner of Jalpaiguri.

In exercise of the powers conferred by the aforesaid section, the Governor in Council is pleased to authorise the officers for the time being engaged in the undertaking, with their servants and workmen, to enter upon and survey the land and do all other acts required or permitted by that section.

Any person interested in the above land, who has any objection to the acquisition thereof, may within thirty days after the date on which public notice of the substance of this notification is given in the locality, file an objection in writing before the Deputy Commissioner of Jalpaiguri.

DECLARATIONS.

Burdwan. — No. 3379L.A. — 2nd March 1935.—Whereas it appears to the Governor in Council that land is required to be taken by Government at the public expense for a public purpose, viz., for diverting the local board road at Bansujipur on distributary No. 1, branch canal, Damodar Canal Project, in the village of Bansujipur, jurisdiction list No. 90, thana Galsi, pargana Burdwan, district Burdwan, it is hereby declared that for the above purpose two pieces of land comprising parts of cadastral survey plot Nos. 929, 941, 942, 944 and 1245, and measuring, more or less, 0·28 of an acre are required within the aforesaid village of Bansujipur.

This declaration is made, under the provisions of section 6 of Act I of 1894, to all whom it may concern.

A plan of the land may be inspected in the office of the Special Land Acquisition Officer, Burdwan, as well as in that of the Executive Engineer, Damodar Canal Division, Burdwan.

Burdwan.—No. 3393L.A.—2nd March 1935. —Whereas it appears to the Governor in Council that additional land is required to be taken by Government at the public expense for a public purpose, viz., for constructing road approach of the head sluice of distributary No. 6/J, main canal, Damodar Canal Project, in the village of Faridpur, jurisdiction list No. 127, thana Burdwan, pargana Shahabad, district Burdwan, it is hereby declared that for the above purpose a piece of land comprising parts of cadastral survey plot

Nos. 1057, 1058, 1362 and 2602 and measuring, more or less, 0·24 of an acre, is required within the aforesaid village of Faridpur.

This declaration is made, under the provisions of section 6 of Act I of 1894, to all whom it may concern.

A plan of the land may be inspected in the office of the Special Land Acquisition Officer, Burdwan, as well as in that of the Executive Engineer, Damodar Canal Division, Burdwan.

Bakarganj. — No. 3433L.A. — 4th March 1935.—Whereas it appears to the Governor in Council that land is required to be taken by Government at the expense of the Kalashkati union board for a public purpose, viz., for a road from Dudhal to Dhakurkati in the village of Dhakurkati, pargana Saistanagar, zilla Bakarganj, it is hereby declared that for the above purpose a piece of land measuring, more or less, 0·0168 of an acre comprising portions of cadastral survey plot Nos. 1722 and 1723, is required within the aforesaid village of Dhakurkati.

This declaration is made, under the provisions of section 6 of Act I of 1894, to all whom it may concern.

A plan of the land may be inspected in the office of the Collector of Bakarganj.

24-Parganas.—No. 3442L.A. — 4th March 1935.—Whereas it appears to the Governor in Council that land is required to be taken by Government at the expense of the South Suburban Municipality, for a public purpose, viz., for the extension of the Chandalpara Road, in the village of Purba-Barisha, jurisdiction list No. 23, thana Behala, pargana Khaspur, district 24-Parganas, it is hereby declared that for the above purpose a piece of land comprising portions of cadastral plot Nos. 1824, 1823, 1821, 1815, 1789 and 1790 and measuring, more or less, 0·1605 of an acre is required within the aforesaid village of Purba-Barisha.

This declaration is made, under the provisions of section 6 of Act I of 1894, to all whom it may concern.

A plan of the land may be inspected in the office of the Commissioners, South Suburban Municipality, as well as in that of the Collector of the 24-Parganas.

Nadia.—No. 3451L.A.—4th March 1935.—Whereas it appears to the Governor in Council that land is required to be taken by Government at the expense of the district board, Nadia, for a public purpose, viz., for ferry Approach Road of Gorai ferry ghat in the village of Gottia, jurisdiction list No. 3, thana Kumarkhali, parganas Birahimpur, zilla Nadia, it is hereby declared that for the above purpose a piece of land comprising parts of cadastral plot Nos. 19, 20, 21, 22, 28 and 29, and measuring, more or less, 0·22 of an acre, is required within the aforesaid village of Gottia.

This declaration is made, under the provisions of section 6 of Act I of 1894, to all whom it may concern.

A plan of the land may be inspected in the office of the Subdivisional Officer of Kushtia.

Jurisdiction.

NOTIFICATION.

Malda.—No. 3405Jur.—2nd March 1935.—In exercise of the powers conferred by subsection (*1*) of section 8 of the Code of Criminal Procedure, 1898 (Act V of 1898), and in supersession of all previous notifications relating to the area included within the Sadar subdivision of the Malda district and to the boundaries of that area, the Governor in Council is pleased to declare that the limits of that subdivision shall include the local areas of the following police-stations:—

(1) Police-station English Bazar—Notifications No. 3511P., dated the 31st March 1914, No. 2760Pl., dated the 23rd May 1927, No. 3031Pl., dated the 7th June 1927, No. 4551Pl., dated the 4th November 1931, and No. 6140Pl., dated the 29th November 1933.

(2) Police-station Bholahat—Notifications No. 3512P., dated the 31st March 1914, No. 2535Pl., dated the 20th September 1924, and No. 2760Pl., dated the 23rd May 1927.

(3) Police-station Kaliachak—Notifications, dated the 22nd February 1875, published in the *Calcutta Gazette* of the 10th March 1875, Part I, page 269, No. 5033Pl., dated the 12th October 1927, No. 4551Pl., dated the 4th November 1931, and No. 1016Pl., dated the 20th February 1935.

(4) Police-station Sibganj—Notifications, dated the 22nd February 1875, published in the *Calcutta Gazette* of the 10th March 1875, Part I, page 269, No. 672Pl., dated the 18th February 1922, No. 1165Pl., dated the 20th March 1924, No. 1165Pl., dated the 28th February 1927, No. 5033Pl., dated the 12th October 1927, No. 3946Pl., dated the 3rd September 1931, No. 6140Pl., dated the 29th November 1933, and No. 1016Pl., dated the 20th February 1935.

(5) Police-station Nawabganj—Notifications No. 3498P., dated the 31st March 1914, No. 837P.D., dated the 1st June 1914, No. 673Pl., dated the 18th February 1922, No. 1165Pl., dated the 20th March 1924, and No. 1165Pl., dated the 28th February 1927.

(6) Police-station Nachole—Notifications No. 3498P., dated the 31st March 1914, No. 837P.D., dated the 1st June 1914, No. 2536Pl., dated the 20th September 1924, No. 3946Pl., dated the 3rd September 1931, and No. 1104Pl., dated the 22nd February 1932.

(7) Police-station Gomastapur—Notifications, dated the 22nd February 1875, published in the *Calcutta Gazette* of the 10th March 1875, Part I, page 269, Nos. 2535Pl. and 2536Pl., dated the 20th September 1924, No. 4752Pl., dated the 1st September 1927 and No. 1104Pl., dated the 22nd February 1932.

(8) Police-station Malda—Notification, dated the 22nd February 1875, published in the *Calcutta Gazette* of the 10th March 1875, Part I, page 269.

(9) Police-station Habibpur—Notifications No. 4403J., dated the 8th September 1904, No. 4752Pl., dated the 1st September 1927, and No. 3108Pl., dated the 20th July 1932.

(10) Police-station Ratua—Notifications, dated the 22nd February 1875, published in the *Calcutta Gazette* of the 10th March 1875, Part I, page 269, No. 3031Pl., dated the 7th June 1927, and No. 1390Pl., dated the 4th March 1932.

(11) Police-station Manikchak—Notifications No. 4403J., dated the 8th September 1904, No. 4038Pl., dated the 12th September 1930, No. 1390Pl., dated the 4th March 1932, and No. 5324Pl., dated the 29th October 1932.

(12) Police-station Kharba—Notifications, dated the 22nd February 1875, published in the *Calcutta Gazette* of the 10th March 1875, Part I, page 269, and No. 4231Pl., dated the 10th August 1933.

(13) Police-station Harishchandrapur—Notifications No. 5327J., dated the 21st September 1896, and No. 4264Pl., dated the 7th October 1931.

(14) Police-station Gajole—Notification, dated the 22nd February 1875, published in the *Calcutta Gazette* of the 10th March 1875, Part I, page 269.

(15) Police-station Bamangola—Notifications No. 4403J., dated the 8th September 1904, No. 2045Pl., dated the 10th April 1928, and No. 4219Pl., dated the 24th September 1931.

Excluded Area.

NOTIFICATION.

Darjeeling. — No. 3406E.A.—2nd March 1935.—In exercise of the powers conferred by section 138 of the Bengal Local Self-Government Act of 1885 (Bengal Act III of 1885), the Governor in Council is pleased to make the following amendments in the rules published with notification No. 2158L.S.-G., dated the 5th September 1918, as subsequently amended:—

Amendments.

(*1*) From the minor head "Miscellaneous" under the major head "XX—Medical" in District Board Form No. 1 (Budget estimate of probable receipts) *delete* the detailed head "Sanitary fees and fines."

(*2*) After the major head "XX—Medical" in the said form *insert* the following major head with the minor and detailed heads thereunder—

XXA—Public Health—

(*a*) Contributions—

From Government for—

(*i*) Rural public health organisation.

(*ii*) Health Officer and Sanitary Inspector.

(*iii*) Vaccination inspecting staff.

(*iv*) Rural water supply.

(*v*) Vaccination.

(*vi*) Kala-azar work.

(*vii*) Quinine.

(*viii*) Anti-malarial works.

(*ix*) Dai training.

From other local funds.

From other sources.

(*b*) Receipts under the Food Adulteration and other Acts.

(*c*) Other receipts.

(*3*) After the sub-head "Loans from the public" under the head "Debt, Deposits and Advances" in the said form *insert* the sub-head "Recovery of loans to union boards."

(*4*) After the sub-head "Repayment of loans from the public" under the head "Debt, Deposits and Advances" on the expenditure side of the said form *insert* the sub-head "Loans to union boards."

O. M. MARTIN,
Secy. to the Govt. of Bengal.

Excise.

Orders by the Commissioner of Excise and Salt, Bengal.

No. 56Exc.—1st March 1935.—Babu Harabilas Mazumdar, Inspector of Excise and Salt, Calcutta, is placed in charge of the bonded laboratory of Messrs. Bathgate and Company in the same district in the public interest.

No. 57Exc.—1st March 1935.—Babu Amiya Nath Bose, Inspector of Excise and Salt, attached to the bonded laboratory of Messrs. Bathgate and Company, Calcutta, is transferred to the bonded laboratory of Messrs. Union Drug Laboratory, Ltd., in the same district in the public interest.

No. 58Exc.—2nd March 1935.—Babu Bhupendra Narayan Deb, Inspector of Excise and Salt, Bangiya Diasalay Karyalaya, 24-Parganas, is transferred to Calcutta on general preventive work in connection with Matches Excise in the public interest.

No. 59Exc.—2nd March 1935. — The following Sub-Inspectors of Excise and Salt, whose appointments as temporary Inspectors of Excise and Salt have been approved by Government, are posted as noted against each in the public interest:—

Babu Gurudas Banerji, Sub-Inspector, Murshidabad—Konnagar Distillery, Hooghly.

Babu Hem Chandra Banerji, Sub-Inspector, Dinajpur—Bangiya Diasalay Karyalaya, 24-Parganas, on Matches Excise duty.

Babu Jasada Kumar Malakar, Sub-Inspector, Bankura—Birbhum, on Matches Excise duty in charge of Birbhum match works.

Babu Nikhil Chandra Roy, Sub-Inspector, 24-Parganas—Calcutta, on Matches Excise works.

No. 60Exc.—2nd March 1935.—Babu Surendra Nath Sarkar, Inspector of Excise and Salt, Konnagar Distillery, Hooghly, is transferred to Calcutta on Matches Excise duty in the public interest.

S. K. HALDAR,

Commr. of Excise and Salt, Bengal.

IRRIGATION DEPARTMENT.

Irrigation.

NOTIFICATIONS.

No. 2-I. — 22nd February 1935. — The following draft of amendments, which in exercise of the powers conferred by section 11 of the Canals Act, 1864 (Bengal Act V of 1864), the Governor in Council intends to make in the revised rules for the Calcutta and Eastern Canals, Tolly's Nala and Sundarbans Steamer Route (published in Bengal Government notification No. 16-I., dated the 14th April 1924, at pages 829-34, Part I of the *Calcutta Gazette* of the 16th idem), is hereby published for the information of persons likely to be affected thereby.

The draft will be taken into consideration on or after the 18th April 1935, and any objections or suggestion received by the undersigned before that date will be considered:—

Draft amendments.

Insert the following new rules as rules 31 and 32 of the said rules:—

Rule 31.—No vessel or raft or float, except Government vessels plying in the interests of Government service, shall pass the Kristopur Toll Station in either direction, between 7 p.m. and 6 a.m. Service motor launches, carrying passengers, plying on monthly toll tickets, may, however, pass the Toll Office up to 9 p.m.

Rule 32.—In case a service motor launch carrying passengers wishes to pass the Kristopur Toll Station between 9 p.m. and 7 a.m. a single trip toll will be realised from the same, in addition to any previous toll paid by the launch on a single or monthly ticket.

No. 3-I.—21st February 1935.—With reference to notification No. 1-I., dated the 21st February 1935, published at page 445, Part I of the *Calcutta Gazette* of the 28th idem, it is hereby notified for general information that the estimate of the probable expenses to be incurred in respect of the repairs, maintenance and works connected therewith of the Madaria khal left embankment from Amta to Dilakash, in the district of Howrah, for a period of five years, commencing from the 1st April 1935, amounts to Rs. 10,000 at an annual rate of Rs. 2,000 and that the Governor in Council proposes, under section 63 of Act II (B.C.) of 1882, to issue an order fixing the aforesaid total sum of Rs. 10,000 as payable at an annual rate of Rs. 2,000 during the said five years by the zamindars of the estates benefited by such repairs, maintenance and works, should no valid objection thereto be preferred.

Any person interested who desires to object to the abovementioned order is required to prefer, within three months from the date of its first publication in the *Calcutta Gazette*, such objections as he may think proper to the Collector of Howrah for consideration by the Governor in Council.

J. D. V. HODGE,

Secy. to the Govt. of Bengal.

TREASURY NOTICES.

Dinajpur, the 23rd February 1935.

Uncovenanted Deputy Collector Babu Gour Chandra Mondal has been placed temporarily in the executive charge of the Dinajpur Treasury with effect from the afternoon of the 23rd February 1935, and he is authorised to draw bills on other treasuries.

S. P. GHOSH, *Collector.*

Orders by the Deputy Accountant-General, Bengal.

The Treasury, the 27th February 1935.

It is notified that the refund order No. 3888 containing 50 orders is in use by the Income-tax Office, Central Salaries Circle, Calcutta, with effect from the 14th February 1935.

The Treasury, the 28th February 1935.

It is notified that the refund order No. 4560 containing 50 orders "White" is in use by the Income-tax Office, Military Circle, Meerut, with effect from the 21st February 1935.

A. R. REBELLO,

Dy. Accountant-General, Bengal.

HIGH COURT NOTICES.

English Department.

The 1st March 1935.

No. 4432E.—The following rule amending the rules relating to qualifications, admission and certificates, etc., of pleaders and mukhtars in courts subordinate to the High Court of Judicature at Fort William in Bengal, made under section 6 of the Legal Practitioners Act, 1879 (XVIII of 1879), is published for general information:—

RULE No. OF 1935.

(CIVIL.)

1. *Insert* the following words after the words "High Court" in line 7 of Rule 27, Chapter XI (revised), Volume I of the Court's General Rules and Circular Orders, Civil:—

"through the District Judge concerned or the Chief Judge, Court of Small Causes, Calcutta, as the case may be".

2. *Add* the following to Rule 27 *ibid*:—

"*Note.*—The intimation provided for by this rule shall be given by Mukhtars, if any, practising in the Presidency Magistrates' Courts, through the Chief Presidency Magistrate".

No. 4476A.—Applications are invited for posts of munsifs in the Bengal Civil Service (Judicial).

1. Applicants must be under 29 years of age on 1st April 1935, and be either a Bachelor of Law; or a Barrister or an Attorney or a member of the Faculty of Advocates in Scotland.

2. Applications must reach the undersigned on or before the 14th March 1935, and contain the following particulars:—

(*i*) Name of applicant.
(*ii*) Religion and caste.
(*iii*) Father's name.
(*iv*) Date of birth (according to Matriculation certificate or equivalent thereof. This certificate must be filed in original).
(*v*) Place of residence.
(*vi*) Degrees obtained with a specification of the class obtained in each (Diplomas must be filed in original).
(*vii*) Length of practice at the Bar, if any, with date of admission to practice.
(*viii*) Certificates of character, etc. (in original).
(*ix*) Applicant's signature with date and address in full.

3. Applications received after the 14th March 1935, will not be considered and canvassing in any form will disqualify a candidate.

N. B.—For the present purpose applications are not required to be submitted in the prescribed form and therefore no application for such form shall be entertained. It will be sufficient if all the particulars mentioned above are furnished on plain paper together with the required certificates and diplomas.

No. 4486G.—In pursuance of the procedure laid down in the Court's notification No. 22691-G., dated the 28th August 1933, for the preparation of paper-books in First Appeals from Decrees and Orders valued at Rs. 10,000 and over and in modification of the Court's notification No. 12758G., dated the 30th June 1934, so far as it relates to the notes to Instruction No. 4 and Appendix B thereto, the printing presses named below have been selected by the Court for doing the printing of such paper-books:—

1. Anadi Printing Works—Babu Abani Nath Banerjee—37, Bethune Row.
2. Ananda Press—Babu R. N. Banerji—2, Indra Roy Road.
3. Ananda Mohan Press—Babu Ramendra M. Majumdar—88/1, Ashutosh Mukherji Road.
4. Anil Printing Works—Babu Sukumar Bose—76, Lansdowne Road.
5. Apurba Press—Babu P. C. Datta—47, Shampukur Street.
6. Ashutosh Printing Works—Babu Ashutosh Das—26, Ghose Lane.
7. Bengal Government Press—Superintendent, Bengal Government Press—38, Gopalnagore Road.
8. Bharati Press—Bagchi Brothers—54, Kansaripara Road, Bhowanipur.
9. Dalhousie Press—Mr. E. D. Rozario—91, Ripon Street.
10. Diana Printing Works—Babu Kanai Lal Mukherji—2/1, Kedar Bose Lane, Bhowanipur.
11. Ganga Press—Mr. Debendra Nath Bhattacharjya—132/2B, Cornwallis Street.
12. Habibulla Press—M. M. Hossain—18, Taltolla Bazar Street, Entally.
13. Imperial Printing Works—Babu Jitendra N. Ghose—12, Ram Mohan Road.
14. International Press—Mr. N. C. Banerjee—7, Durga Charan Doctor Road.
15. Lakshmi Narayan Printing Works—Babu Fanindra Lal Sarkar—15, Creek Row.
16. Lily Press—Babu Pulinanda Basak—125/4, Shambazar Street.
17. Mitra Press—Babu Amiya Kumar Mitra—45, Grey Street.
18. New Brittannia Press—Babu Bhutnath Mitter—32, Goabagan Lane.
19. Rahimi Press—M. Wahed Buksh—1, Ostagar Lane.

Note 1.—In such cases the Advocate concerned will be free to select any of the abovenamed presses, but will be liable to any order from the Registrar if there be any good reason for not approving of the press. Any press reported by the office for indifferent work, delay, etc., in printing will be liable to be struck off this list.

Note II.—In "below" cases the Advocate concerned will be free to print his paper-book in any press he chooses, whether such press be on this list or not, but the Advocate will be responsible to the Court that the paper-book has been prepared and printed with due care and diligence.

Note III.—Attention is invited to the proviso to Rule 36, Chapter IX (revised) of the Appellate Side Rules. The power given by that proviso will be more rigidly applied in future and bad work by any press will bring the Advocate concerned within the mischief of that proviso.

Note IV.—Any changes of Managership or Proprietorship of the listed presses by death, transfer, change of address, etc., should be notified to the Court within a fortnight of the casualty occurring; otherwise the press concerned will be liable to be struck off the list if the Court discovers that such matters have not been reported.

By order of the High Court,

N. L. HINDLEY, *Registrar.*

ORDERS BY COMMISSIONERS OF DIVISIONS.

Burdwan Division—Chinsura.

No. 1081J.G.—27th February 1935. — Maulvi Sakhawat Hussain, Sub-Deputy Collector and Sub-Deputy Magistrate, Kalna, district Burdwan, is granted, under rule 81 (*b*) (*ii*) of the Fundamental Rules, leave on average pay for five days, with effect from the 26th January to 30th January 1935.

No. 392M.—2nd March 1935.—It is hereby notified for general information that, under rule 20 (*b*) of the rules for the management of charitable hospitals and dispensaries in Bengal, the following gentlemen have been appointed to be members of the committee for the management of the Rishra-Mahesh Dispensary in the district of Hooghly:—

The Subdivisional Officer, Serampore (*ex-officio*).

Mr. James Strachan Robertson.

Mr. Suresh Chandra Ghosh.

Babu Satish Chandra Adhicary.

Babu Sashi Bhusan Ghose.

Dr. Nalini Kanta Chatterjee.

Babu Keshablal Chowdhuri.

Babu Nitai Chandra Chakravarty.

Babu Kali Prasanna Sen Gupta.

Babu Jatindra Nath Mukherjee.

Babu Dharmadas Adhicari.

Babu Bibhuti Bhusan Ganguli.

No. 483L.S.-G.—2nd March 1935.—It is hereby notified for general information that, under section 9 of the Bengal Local Self-Government Act of 1885, as amended by section 7 of the Bengal Local Self-Government (Amendment) Act of 1932, the following gentlemen have been elected as members of the Sadar local board in the district of Howrah :—

Group No.	Names of police-stations.	Names of unions.	Names of gentlemen elected.
		Special Constituency.	
A	Sankrai	All unions	Mafizaddin Ahmed Middey.
	Panchla		
B	Domjur	All unions	S. Abdur Rauf.
	Jagatballavpur ..		
	Bally		
	Jagacha		
		General Constituency.	
1	Bally	Lillooah, Bally and Jagadishpur.	Babu Sitanath Santra.
	Jagacha	Santragachi	
2	Jagacha	Jagacha	Babu Manabendra Mohan Kundu Choudhury.
	Sankrail ..	Dully, Andul	
	Domjur	Bankra, Mahiary	
3	Domjur	Uttar Jhapardah, Narna, Makardaha and Domjur.	Babu Satkari Mukhopadhya.
4	Domjur	Dakshin Jhapardah, Begri and Kalore.	Babu Jatindra Nath Sen.
	Sankrail	Dhulagori	

Group No.	Names of police-stations.	Names of unions.	Names of gentlemen elected.
5	Sankrail	Jhorhat, Sankrail, Manikpur and Nalpur.	Babu Charu Chandra Pal.
6	Sankrail	Beldubi	Babu Pares Nath Roy.
	Panchla	Panchla, Deulpur and Bonharispur.	
7	Panchla	Polgustia, Gobindapur and Jujeshwar.	Babu Phanindra Nath Manna.
	Jagatballavpur ..	Maju	
8	Jagatballavpur ..	Jagatballavpur, Bargachia, Sakrahati, Pantihal and Hatol-Anantabati.	Babu Debendra Nath Chakraborty.

No. 487L.S.-G.—2nd March 1935.—It is hereby notified for general information that, under section 9 of the Bengal Local Self-Government Act of 1885, as amended by section 7 of the Bengal Local Self-Government (Amendment) Act of 1932, the following gentlemen have been elected as members of the Uluberia local board in the district of Howrah :—

Group No.	Names of police-stations.	Names of unions.	Names of gentlemen elected.
		Special Constituency.	
A	Amta	All unions	Maulvi Mastan Ali Mallik.
	Bagnan	Kalyanpur, Bainan and Bangalpur.	
B	Bauria	Bauria	Maulvi Rajab Ali Molla.
	Uluberia	Basudebpur, Chengail, Joargari, Chandipur, Uluberia, Baniban and Kalinagar.	
C	Shyampur	All unions	Maulvi Abdul Samad.
	Uluberia	Dhulasimla, Hatgacha ..	
	Bagnan	Batul, Benapur, Chandbhang, Bagnan and Mellock.	
		General Constituency.	
1	Amta	Bhatora, Jhikra, Joypur and Khalna.	Babu Kishori Mohon Roy.
2	Amta	Thalia, Gazipur, Tajpur and Garh Bhawanipur.	Babu Nalinaksha Ray.
3	Amta	Amta, Bhandargacha and Udang ..	Babu Manmatha Nath Roy.
4	Amta	Khosalpur, Basantapur, Rashpur and Harishpur.	Babu Bijay Ratan Baksi.
5	Amta	Dihi Bhursitta, Udaynarainpur, Singty and Debipur.	Babu Haripada Bhattacharyya.
6	Amta	Tulsiberia	Babu Mohendra Nath Ghosh.
	Uluberia	Joargari, Chandipur and Hatgacha	
7	Uluberia	Uluberia, Baniban and Kalinagar ..	Babu Barada Prosad Chakraverty.
8	Uluberia	Chengail, Basudebpur ..	Babu Jatindra Nath Ghosh.
	Bauria	Bauria	
9	Uluberia	Dhulasimla	Maulvi Haji Abdul Wahed Mallik.
	Shyampur ..	Belari and Nabagram	
10	Shyampur ..	Shyampur, Kharubere, Baneswarpur and Kamalpur.	Babu Ramnarain Maity.
11	Shyampur ..	Nakole, Dehimandalghat, Sasaty and Amardaha.	Babu Gobinda Chandra Mandal.
12	Bagnan	Bagnan, Bantul, Benapur and Chandbhag.	Babu Santosh Kumar Ghosal.
13	Bagnan	Mellock, Kalyanpur, Bainan and Bangalpur.	Babu Panchanan Ghosal.

L. B. BURROWS, *Commissioner.*

No. 1051J.G.—25th February 1935.—It is hereby notified that Babu Amar Nath Dutt, one of the accepted candidates for by-election from the Burdwan Division Non-Muhammadan Rural constituency of the Indian Legislative Assembly, has filed on the 22nd February 1935 his return of election expenses and the declaration in respect thereof as required by rule 19, clauses (*1*) and (*3*) respectively of the Legislative Assembly Electoral Rules. They can be inspected in the office of the Commissioner of the Burdwan Division, Chinsura, on payment of a fee of one rupee between the hours of 11 a.m. and 3 p.m. for one week from the date of publication of this notification in the gazette or from the 7th March 1935, whichever is later.

L. B. BURROWS, *Returning Officer.*

Bankura, the 25th February 1935.

No. 969J.—It is hereby notified for general information that, under sub-section (*2*) of section 6 of the Bengal Village Self-Government Act, 1919 (Bengal Act V of 1919), the following gentlemen have been duly elected to be members of the under-mentioned union boards in the Sadar subdivision of the district of Bankura:—

Mejhia police-station.

Banjora union board.

Ward No. I.

Babu Ram Prasad Dutta.
Babu Sarada Prasad Tewari.
Babu Gokul Nandi.

Ward No. II.

Babu Mokshadananda Pathak.

Ward No. III.

Babu Ashutosh Mukhopadhaya.
Babu Chaitanya Chandra Bandopadhya.

Ramchandrapur union board.

Ward No. I.

Babu Surja Narayan Chaudhury.
Babu Kali Pada Pattanaik.

Ward No. II.

Babu Kedar Nath Sarkar.

Ward No. III.

Babu Harendra Nath Misra.
Babu Ram Ranjan Acharyya.

Ward No. IV.

Babu Sashi Bhusan Pal.

Mejhia union board.

Ward No. I.

Babu Rajani Kanta Ray.

Ward No. II.

Babu Amulya Ratan Pal.
Babu Sudhir Chandra Pal.

Ward No. III.

Babu Sasi Bhusan Dubey.
Babu Bholanath Bhattacharya.
Babu Magaram Tewari.

Kustore union board.

Ward No. I.

Babu Rakhal Chandra Majhi.

Ward No. II.

Babu Pramatha Nath Mandal.
Babu Abinash Chandra Bandopadhya.

Ward No III.

Babu Ram Kinkar Majhi.
Babu Ram Ratan Chakravarty.

Ward No. IV.

Lakshmi Dubey.

Ardhagram union board.

Ward No. I.

Babu Radhanath Roy.

Ward No. II.

Babu Ram Pada Roy.
Babu Baidya Nath Roy.

Ward No. III.

Babu Ram Chandra Dutta.
Babu Rash Behari Mukhopadhaya.

Ward No IV.

Babu Kunja Roy.

Gangajalghati police-station.

Pirrabani union board.

Ward No. I.

Babu Gopinath Pal.

Ward No. II.

Babu Rai Charan Mandal.
Babu Hari Kinkar Shit.

Ward No. III.

Babu Loke Nath Pal.

Ward No. IV.

Babu Ashutosh Bhattacharya.
Babu Hari Das Bhattacharya.

Kaniamara union board.

Ward No. I.

Babu Bepin Nandi.

Ward No. II.

Babu Gouri Lal Upadhaya.

Ward No. III.

Babu Dibakar Singha.
Babu Bishnupada Chattopadhya.
Babu Karali De.

Ward No. IV.

Babu Jayanti Kumar Chattopadhaya.

Bhaktabandh union board.

Ward No. I.

Babu Aghore Nath Bhattacharya.

Ward No. II.

Babu Radha Krishna Singha.

Ward No. III.

Babu Bharat Chandra Majhi.

Ward No. IV.

Babu Rampada Mandal.

Ward No. V.

Babu Hem Chandra Layek.

Ward No. VI.

Babu Mati Lal Ghose.

Lachhmanpur union board.

Ward No. I.

Babu Bhuban Mohan Mukhopadhya.

Ward No. II.

Babu Dakshineswar Chakravarty.
Babu Gostha Behari Layek.

Ward No. III.

Babu Felaram Majhi.

Ward No. IV.

Babu Haripada Majhi.

Ward No. V.

Babu Baidyanath Goswami.

Gangajalghati union board.

Ward No. I.

Babu Harekrishna Mitra.
Babu Hem Chandra Khan.
Babu Nani Gopa Bandopadhaya.
Babu Ram Gobinda Goswami.

Ward No. II.

Babu Brajendra Nath Chattopadhaya.
Babu Bholanath Degharia.

Kapistha union board.

Ward No. I.

Babu Jyoti Singha.

Ward No. II.

Babu Krishnalal Singha.

Ward No III.

Babu Kamala Kanta Mahanta.
Babu Nimai Chandra Singha.

Ward No. IV.

Babu Ram Saran Chakravarty.

Ward No. V.

Babu Jagat Durlav Roy.

Nityanandapur union board.

Ward No. I.

Babu Rajnarayan Karmakar.

Ward No. II.

Babu Satish Chandra Chawdhury.
Babu Uday Mandal.

Ward No. III.

Babu Pravakar Roy.
Babu Jagadananda Bandopadhaya.

Ward No. IV.

Babu Jajneswar Mandal.

Barshal union board.

Ward No. I.

Babu Dwijapada Bandopadhaya.
Babu Hitlal Roy.

Ward No. II.

Babu Jugal Kishore Mandal.
Babu Surja Narayan Majhi.

Ward No. III.

Babu Sarbeswar Mandal.

Ward No. IV.

Babu Uday Chandra Mandal.

Lathiabani union board.

Ward No. I.

Babu Gobinda Prasad Das.
Babu Upendra Nath Misra.
Babu Ram Ranjan Misra.

Ward No. II.

Babu Baidyanath Mandal.
Babu Bhuban Mohan Mandal.

Ward No. III.

Babu Gayaram Mandal.

Ban-Asuria union board.

Ward No. I.

Babu Kali Kinkar Mukhopadhaya.

Ward No. II.

Babu Gobinda Chandra Layek.

Ward No. III.

Babu Ramdas Mukhopadhaya.

Ward No. IV.

Babu Goribnath Mandal.
Babu Satish Chandra Roy.

Ward No. V.

Babu Bharat Chandra Dubey.

Saltora police-station.

Bamantore union board.

Ward No. I.

Babu Thakahari Shaw.

Ward No. II.

Babu Umesh Chandra Chakravarty

Ward No. III.

Babu Kinkar Chandra Chakravarty.

Ward No. IV.

Babu Jugal Mandal.

Ward No V.

Babu Jaladhar Gangopadhaya.

Ward No. VI.

Babu Kshudiram Misra.

Salma union board.

Ward No. I.

Babu Dhan Krishna Adhikary.

Ward No. II

Babu Kalipada Sen Gupta.

Ward No. III.

Babu Haripada Chawdhury.

Ward No. IV.

Babu Haripada Mandal.

Ward No. V.

Babu Abinash Chandra Misra.

Ward No. VI.

Babu Bagala Prasad Gangopadhaya.

Dhekia union board.

Ward No. I.

Babu Haripada Biswas.

Ward No. II.

Babu Bholanath Ghatak.

Ward No. III.

Babu Aswini Kumar Chakravarty.

Ward No. IV.

Babu Gora Chand Majhi.

Ward No. V.

Babu Prahlad Chandra Ganguly.
Babu Kailash Biswas.

Tiluri union board.

Ward No. I.

Babu Tinkari Chattopadhaya.

Ward No. II.

Babu Barada Kanta Roy.

Ward No. III.

Maulvi Nur Muhammad Shaikh.

Ward No. IV.

Babu Ram Narayan Bandopadhaya.

Ward No. V.

Babu Amulya Ratan Misra.
Babu Satish Chandra Sen.

Saltora union board.

Ward No. I.

Babu Kalidas Mukhopadhaya.

Ward No. II.

Babu Mukunda Lal Chobey.

Ward No. III.

Babu Gobinda Prasad Mandal.

Ward No. IV.

Maulvi Karjan Ali Sadagar.

Ward No. V.

Babu Manasaram Napit.

Ward No. VI.

Babu Manindra Nath Sarkar.

Gogra union board.

Ward No. I.

Babu Natabar Mukhopadhaya.
Babu Jyoti Lal Chattopadhaya.

Ward No. II.

Babu Haridas Chattopadhaya.

Ward No. III.

Babu Rakhahari Mudi.

Ward No. IV.

Babu Sarada Prasad Bit.

Ward No. V.

Babu Rash Behari Goswami.

Kanuri union board.

Ward No. I.

Babu Kali Prasad Mukhopadhaya.

Ward No. II.

Babu Joy Mandal.

Ward No. III.

Babu Madai Mandal.

Ward No. IV.

Babu Jugal Majhi.

Ward No. V.

Babu Gouri Sankar Ash.

Ward No. VI.

Babu Prasanna Kumar Pal.

Pabra union board.

Ward No. I.

Babu Upendra Nath Chandra.
Babu Abinash Chandra Nayak.

Ward No. II.

Babu Brajendra Nath Acharyya.

Ward No. III.

Babu Upendra Nath Majhi.

Ward No. IV.

Babu Gobinda Prasad Chattopadhaya.

Ward No. V.

Babu Sitaram Majhi.

Barjora police-station.

Maliara union board.

Ward No. I.

Babu Braja Nath Majhi.

Ward No. II.

Babu Harihar Nandy.

Ward No. III.

Babu Radharaman Tewari.
Babu Srigobinda Tewari.
Babu Bejoy Krishna Gupta.
Babu Mritunjoy Chattopadhaya.

Ghutgaria union board.

Ward No. I.

Babu Amulya Krishna Tewari.

Ward No. II.

Babu Nrisingha Murari Mandal.
Babu Ram Kinkar Karmakar.

Ward No. III.

Babu Ganga Narayan Karmakar.

Ward No. IV.

Babu Banwari Lal Gharui.
Babu Tarak Nath Sen.

Barjora union board.

Ward No. I.

Babu Ashutosh Pal.
Babu Phani Bhusan Goswami.

Ward No. II.

Babu Haridas Mukhopadhaya.

Ward No. III.

Babu Balaram Mandal.
Babu Bibhuti Bhusan Mukhopadhaya.
Babu Bisweswar Mukhopadhaya.

Pakhanna union board.

Ward No. I.

Babu Golak Nath Biswas.
Babu Dwijendra Kumar Mukherjee.

Ward No. II.

Babu Kali Bhusan Mukherjee.
Babu Sambhunath Mukherjee.
Babu Jogesh Chandra Chatterjee.

Ward No. III.

Maulvi Muhammad Osman Mallik.

Hat-Asuria union board.

Ward No. I.

Babu Bimal Chandra Biswas.

Ward No. II.

Babu Sashadhar Biswas.
Maulvi Shaikh Ibrahim.

Ward No. III.

Babu Sourindra Mohan Chattaraj.

Ward No. IV.

Maulvi Ibrahim Mandal.

Ward No. V.

Maulvi Shaikh Muksud Mirdha.

Saharjora union board.

Ward No. I.

Babu Satya Kinkar Dutta.
Babu Ambica Charan Ghose.

Ward No. II.
Babu Ram Krishna Bhandari.

Ward No. III.
Babu Kamaksha Chakravarty.
Babu Gati Krishna Bandopadhaya.
Babu Ashutosh Ghosal.

Khanrari union board.

Ward No. I.
Babu Sristidhar Chakravarty.
Babu Bholanath Mandal.

Ward No. II.
Babu Jugal Kishore Roy.
Babu Kalipada Chakravarty.

Ward No. III.
Babu Natabar Das.

Ward No. IV.
Babu Raghunath Ghose.

Gadardihi union board.

Ward No. I.
Babu Radhanath Singhababu.

Ward No. II.
Babu Pravakar Chattaraj.

Ward No. III.
Rai Sahib Bholanath Mitra.
Babu Saktipada Chatterjee.

Ward No. IV.
Babu Barunoday Chakravarty.

Ward No. V.
Babu Haripada Chattaraj.

Brindabanpur union board.

Ward No. I.
Babu Satish Chandra Bir.
Babu Abani Kanta Bandopadhaya.

Ward No. II.
Babu Satya Kinkar Chakravarty.
Babu Benode Behari Ghose.

Ward No. III.
Babu Gour Chandra Mandal.

Ward No. IV.
Babu Amulya Krishna Chattopadhaya

Chhandar union board.

Ward No. I.
Babu Pachai Chandra Man.
Babu Braja Lal Singha.

Ward No. II.
Babu Naba Kumar Ghose.
Babu Gopeswar Ghose.

Ward No. III.
Babu Akhoy Kumar Ghose.
Babu Makhan Lal Bhanja.

Beliatore union board.

Ward No. I.
Babu Jogendra Nath Pal.
Babu Sasisekhar Roy.
Babu Dibakar Chakravarty.

Ward No. II.
Babu Bhabataran Sur.

Ward No. III.
Babu Benoy Krishna Roy.

Ward No. IV.
Babu Hem Chandra Dandopath.

No. 970J.—It is hereby notified for general information that, under sub-section (*3*) of section 6 of the Bengal Village Self-Government Act, 1919 (Bengal Act V of 1919), the following gentlemen have been appointed to be the members of the under-mentioned union boards in the Sadar subdivision of the district of Bankura:—

Mejhia police-station.

Banjora union board.
Babu Durgadas Misra.
Babu Nitya Gopal Chawdhury.
Babu Kedar Nath Misra.

Ramchandrapur union board.
Babu Mahananda Bauri.
Babu Haridas Goswami.
Babu Anadi Layek.

Mejhia union board.
Babu Haripada Deasi.
Babu Chandi Bauri.
Babu Rakhal Chandra Ghose.

Kustore union board.
Babu Sarbeswar Bauri.
Babu Mrityunjoy Mukhopadhaya.
Babu Baidyanath Mandal.

Ardhagram union board.
Babu Jyoti Prasad Bandopadhaya.
Maulvi Shaikh Khoda Newaj.
Babu Bholanath Roy.

Gangajalghati police-station.

Pirrabani union board.
Babu Kshitish Chandra Sikdar.
Babu Purna Chandra Bhattacharya.
Babu Gour Tanti.

Kaniamara union board.
Babu Sarada Prasad Roy.
Babu Bishnu Bauri.
Babu Ram Ranjan Singha.

Bhaktabandh union board.
Babu Sasi Singha.
Babu Hari Prasad Singha.
Babu Shyama Charan Batabyal.

Lachhmanpur union board.

Babu Gopal Chandra Bandopadhaya.
Babu Sridhar Chandra Bandopadhaya.
Babu Lakshmi Narayan Grahacharyya.

Gangajalghati union board.

Babu Amulya Ratan Mukhopadhaya.
Babu Narayan Chandra Singha.
Babu Radhika Prasad Singha.

Kapistha union board.

Babu Upendra Lal Dutta.
Babu Ramkrishna Dubey Pandit.
Babu Mrityunjoy Bandopadhaya.

Nityanandapur union board.

Babu Sasi Bhusan Kamaria.
Babu Hari Kinkar Gangopadhaya.
Babu Kedar Nath Ghosal.

Barshal union board.

Babu Bholanath Mandal.
Babu Nilmadhab Majhi.
Babu Hem Chandra Tewari.

Lathiabani union board.

Babu Lambodar Goswami.
Babu Mahadev Bandopadhaya.
Babu Jugal Mandal.

Ban-Asuria union board.

Babu Amar Kanta Roy.
Babu Kalipada Bandopadhaya.
Babu Sasti Charan Mukherjee.

Saltora police-station.

Bamantore union board.

Babu Jiban Bauri.
Babu Bansidhar Degharia.
Babu Kuchil Gorain.

Salma union board.

Babu Rakhal Chandra Mukhopadhaya.
Babu Radhamadhab Misra.
Babu Krishna Kishore Roy.

Dhekia union board.

Babu Durgadas Chakravarty.
Babu Anath Nath Mukherjee.
Babu Ram Saday Chakravarty.

Tiluri union board.

Babu Braja Kishore Sen Ukil.
Babu Rajendra Sarkar.
Babu Babu Lal Majhi.

Saltora union board.

Babu Paritosh Mitra.
Babu Sristidhar Mandal.
Babu Satish Chandra Chattopadhaya.

Gogra union board.

Babu Rammoy Bandopadhaya.
Babu Narayan Majhi.
Babu Rangta Majhi.

Kanuri union board.

Babu Bhusan Chandra Mukhopadhaya.
Babu Radhaballav Mandal.
Babu Damu Majhi.

Pabra union board.

Babu Mahadev Acharyya.
Babu Hrishikesh Nayek.
Babu Jogendra Nath Sarkar.

Barjora police-station.

Maliara union board.

Babu Nripendra Narayan Chandradhuryya.
Babu Abani Nath Chandradhuryya.
Babu Bimala Prasad Chattopadhaya.

Ghutgaria union board.

Babu Ashutosh Karmakar.
Babu Jugal Kishore Mandal.
Babu Bara Mohit Ghose.

Barjora union board.

Babu Bhabataran Mandal.
Babu Gobinda Das.
Babu Mrityunjoy Roy.

Pakhanna union board.

Babu Nalini Nath Chattopadhaya.
Babu Kamala Kanta Sarkar.
Maulvi Muhammad Ismail Mallik.

Hat-Asuria union board.

Maulvi Ahajan Mandal.
Maulvi Abdul Karim Mandal.
Babu Gour Roy.

Saharjora union board.

Babu Gobinda Layek.
Babu Panchanan Ghosal.
Babu Sukhamay Singha.

Khanrari union board.

Babu Bimala Prasad Mukhopadhaya.
Babu Bholanath De.
Babu Tikandas Mahanta.

Godardihi union board.

Babu Dhirendra Nath Singha Thakur
Babu Behari Bauri.
Babu Kalipada Chakravarty.

Brindabanpur union board.

Babu Annada Prasad Sarma.
Babu Hem Chandra Chattopadhaya.
Babu Jahuri Bauri.

Chhandar union board.

Babu Sasanka Sekhar Mukherjee.
Babu Pachai Majhi.
Babu Nimai Sur.

Beliatore union board.

Babu Nabakrishna Roy.
Babu Babu Lal De.
Babu Upendra Chandra Neogy.

N. C. BOSE, for *District Magistrate.*

Bankura, the 2nd March 1935.

No. 1109J.—It is hereby notified for general information that, under sub-section 2 of section 6 of the Bengal Village Self-Government Act, 1919 (Bengal Act V of 1919), the following gentlemen have been duly elected to be members of the undermentioned union board in the Vishnupur subdivision of the district of Bankura:—

Patrasayer police-station.

Belut-Rasulpur union board.

Ward No. I.

Babu Indra Kumar Ghugu.

Ward No. II.

Babu Kashinath Sarkar.

Ward No. III.

Munshi Sakhawat Hossain Middya.

Ward No. IV.

Munshi Abdur Rashid.

Ward No. V.

Babu Dharani Dhar Gupta.
Babu Trailakhya Nath Mandal.

No. 1110J.—Under sub-section 3 of section 6 of the Bengal Village Self-Government Act, 1919 (Bengal Act V of 1919), the following gentlemen have been appointed to be members of the undermentioned union board in the Vishnupur subdivision of the district of Bankura:—

Patrasayer police-station.

Belut-Rasulpur union board.

Babu Guru Das Chakravarty, B.A.
Babu Jamini Kanta Mukherjee.
Babu Akhil Bagdi.

T. C. ROY, *District Magistrate.*

Burdwan, the 27th February 1935.

It is hereby notified for general information that, under section 13 of the Bengal Village Self-Government Act, 1919 (Bengal Act V of 1919), read with rule 36 of the rules for the election and appointment of members of union boards, etc., Munshi Badre Alam Mirza has been appointed by the District Magistrate of Burdwan to be a member of the Pahalanpur union board in police-station Raina in the Sadar subdivision of Burdwan, *vice* Munshi Shaikh Komaraddin, deceased.

It is hereby notified for general information that, under section 13 of the Bengal Village Self-Government Act, 1919 (Bengal Act V of 1919), read with rule 35 of the rules for the election and appointment of members of union boards, etc., Babu Giridhari Ghosh has been duly elected to be a member of Ward No. II of the Sasanga union board in police-station Khandaghosh in the Sadar subdivision of Burdwan, *vice* Babu Radha Gobinda Mondal, removed.

M. M. STUART, *District Magistrate.*

Orders by the Deputy Inspector-General of Police, Burdwan Range.

Chinsura.—No. 1389.—1st March 1935.—Babu Nibaran Chandra Biswas, officiating Inspector, East Indian Railway Police, Howrah, will continue to act as such in the East Indian Railway Police, Howrah, *vice* Rai Sahib Shyamapati Ray, Inspector, deceased.

In consequence of the abolition, with effect from the 1st March 1935, of one post of Inspector from the sanctioned strength of the East Indian Railway Police, Howrah, Babu Phanindra Mohan Das Gupta, officiating Inspector, East Indian Railway Police, Howrah, *vice* Rai Sahib Shyamapati Ray, Inspector, deceased, is transferred to Hooghly and will continue to act as such, *vice* Babu Basudeb Kabiraj, Inspector, Hooghly, appointed to act as Deputy Superintendent of Police.

Maulvi Jawadul Karim, who is at present acting as Inspector in the above vacancy in Hooghly, will revert to his substantive rank in the East Indian Railway Police, Howrah.

The transfers are effected in the interests of public service.

Mr. C. W. Marshall, Armed Inspector, Midnapore, is granted 1 month's leave on average pay, on medical certificate, under rule 81 (*b*) (*ii*) of the Fundamental Rules, in extension of the leave granted to him under notification—Jalpaiguri—No. 7224—2nd November 1934, published in the *Calcutta Gazette*, dated the 15th November 1934.

The existing acting arrangement will continue.

Armed Sub-Inspector Brich Kishor Singh of the Midnapore Special Armed force, is appointed to act as Inspector in the Range Reserve force attached to that district, *vice* Jamadar Muhammad Roshan Khan, Inspector, appointed temporarily to fill the post of Inspector sanctioned in Government order No. 5392Pl., dated the 21st September 1934, for the temporary armed force in the Midnapore district.

Maulvi Abdur Rahim, who is at present acting as Inspector in the vacancy, will, on relief, revert to his substantive rank in Birbhum.

E. B. JONES,
Deputy Inspector-General of Police.

Chittagong Division—Chittagong.

Chittagong, the 28th February 1935.

No. 144-C.—It is hereby notified for general information that—

(*a*) Under sub-section (*2*) of section 6 of the Bengal Village Self-Government Act, 1919, the following gentlemen in column 2 have been duly elected to be members of the under-mentioned union boards in Sadar "B" subdivision of the Chittagong district.

(*b*) Under sub-section (*3*) of section 6 of the Bengal Village Self-Government Act, 1919, the following gentlemen in column 3 have been appointed by the District Magistrate of Chittagong to be members of the under-mentioned union boards in the Sadar "B" subdivision of the Chittagong district :—

Banskhali police-station.

Union board.	Elected members.	Nominated members.
1	2	3
I. Pukuria ..	Maulvi Md. Yakub Hossain ..	Maulvi Serajul Haque Choudhury.
	Maulvi Md. Abdul Quader.	Maulvi Jamaluddin Ahmed.
	Maulvi Siddique Hossain.	Babu Gopal Krishna Chaudhury.
	Maulvi Md. Anwar Ali Choudhury.	
	Here the election of Ward "B" failed due to the default and neglect of the voters and under sub-section (*4*) of section 6 of the Bengal Village Self-Government Act, 1919, the following gentlemen have been appointed by the District Magistrate of Chittagong to be members of Pukuria union board :—	
	Maulvi Hafez Ahmed.	
	Maulvi Obaidur Rahman Choudhury.	
II. Sadhanpur ..	Babu Sudhangshu Bimal Choudhury.	Babu Surendra Nath Nandi.
	Babu Kshirod Chandra Das.	Maulvi Abdul Bari.
	Maulvi Dalilur Rahman.	Maulvi Abdul Jabbar Choudhury.
	Maulvi Abdul Mahbub.	
	Babu Hemendra Lal Choudhury.	
	Babu Mokshoda Ranjan Chakrabarty.	
III. Khankhanabad ..	Maulvi Abdul Hakim Choudhury ..	Maulvi Nuruddin.
	Maulvi Ashabuddin.	Maulvi Ashrafali Master.
	Maulvi Abdul Bari.	Maulvi Khalilur Rahman.
	Maulvi Hakim Mian Matbar.	
	Maulvi Md. Latu Khan.	
	Maulvi Shamsheruzzaman.	
IV. Baharchara ..	Maulvi Md. Shafiqul Islam Choudhury.	Maulvi Abdul Majid Choudhury.
	Maulvi Abdul Kuddus Choudhury.	Maulvi Faizullah Talukdar.
	Maulvi Ekramali Choudhury.	Maulvi Faez Ahmad.
	Maulvi Haji Ashab Mian Choudhury.	
	Maulvi Ali Akbar Choudhury.	
	Maulvi Abdul Jabbar Choudhury.	
V. Kalipur ..	Munshi Ahsanuzzeman Choudhury	Maulvi Shafiqur Rahman Siddiqui.
	Babu Abinash Chandra Dutta.	Maulvi Aziz Ahmad, B.L.
	Maulvi Abdul Hai.	Maulvi Sayed Bakht.
	Babu Jogesh Chandra Datta.	
	Munshi Nurun Nabi Choudhury.	
	Babu Niranjan Datta.	

Union board.	Elected members.	Nominated members.
1	2	3
VI. Bailchari-Katharia ..	Haji Badi Ahmad Chaudhury ..	Babu Satish Chandra Sen.
	Maulvi Aziz Ahmed Chaudhury.	Babu Kashi Mohan Sikdar.
	Munshi Khalilur Rahman Chaudhury.	Maulvi Sultan Ahmad Talukdar.
	Maulvi Sultan Ahmad.	
	Maulvi Arham Ali.	
	Maulvi Mahfuz Ali.	
VII. Saral ..	Maulvi Jamsher Ali ..	Maulvi Azizur Rahman, B.L.
	Maulvi Siddique Ahmad.	Maulvi Kobbad Ahmad.
	Munshi Gura Mian.	Babu Gour Sundar Dhar.
	Munshi Sultan Ahmad.	
	Munshi Abdul Hakim.	
	Munshi Yakub Ali.	
VIII. Jaldi ..	Maulvi Shaikh Md. Wajid Ali Chaudhury.	Maulvi Faizur Rahman Chaudhury.
	Maulvi Md. Muzaffaruddin Ahmad Chaudhury.	Babu Barada Charan Biswas.
	Maulvi Enayet Ali Chaudhury.	Maulvi Abdur Rashid.
	Babu Haradas Dey.	
	Babu Hari Mohan Talukdar.	
	Maulvi Mazharul Haq Chaudhury.	
IX. Gondamara ..	Maulvi Fazlur Rahman Chaudhury	Maulvi Mofzalur Rahman (of Mulkichar).
	Maulvi Elahdad Ahmad Chaudhury.	Maulvi Abdus Samad.
	Maulvi Atar Ali Pandit.	Munshi Anoo Mian Talukdar.
	Maulvi Ali Mian Saudagar.	
	Maulvi Tajammul Ali Sikdar.	
	Maulvi Dalilur Rahman Sikdar.	
X. Chambal ..	Maulvi Abdur Rahman Chaudhury	Maulvi Hamid Ali.
	Maulvi Ashraf Mian Saudagar.	Babu Anukul Chandra Chaudhury.
	Maulvi Izzat Ali.	Babu Pratap Chandra Biswas.
	Maulvi Yakub Ali Chaudhury *alias* Gura Mian.	
	Maulvi Kader Baksh Chaudhury *alias* Tunu Mian.	
	Maulvi Siddique Ahmad.	
XI. Puichari ..	Maulvi Khalilur Rahman ..	Maulvi Badiul Alam Chaudhury.
	Babu Srinath Sastri.	Maulvi Azizur Rahman Chaudhury.
	Maulvi Sultan Ahmad.	Babu Aswini Kumar Deb.
	Maulvi Habib Ahmad Chaudhury.	
	Haji Mustafizur Rahman Chaudhury.	
	Maulvi Md. Sharif Sikdar.	
	Satkania police-station.	
I. Charati ..	Maulvi Rahimullah Chaudhury ..	Maulvi Ebadullah.
	Babu Jogesh Chandra Das.	Kabiraj Sarada Prasad Das.
	Maulvi Abdul Haque Chowdhury.	Maulvi Abdul Hakim Choudhury.
	Babu Lakshmi Chandra Chaudhury.	
	Maulvi Md. Faez Ahmad.	
	Maulvi Abul Khair.	
II. Khagaria ..	Maulvi Sirajul Islam Chaudhury ..	Maulvi Monir Ahmad.
	Maulvi Amir Hamza.	Maulvi Ahmad Ali Sikdar.
	Maulvi Karamat Ali.	Maulvi Ezhar Mian Chaudhury.
	Babu Pulin Behari Mazumdar.	
	Maulvi Rahman Ali.	
	Maulvi Ahmadullah.	

Union board.	Elected members.	Nominated members.
1	2	3
11-A. Nalua ..	Maulvi Amir Bakhsh ..	Babu Nalini Kanta Acharjya Jyotiratna.
	Babu Sarada Charan Karan.	Maulvi Abul Khair Chaudhury.
	Babu Rebati Ranjan Das.	Maulvi Nazir Ahmad.
	Maulvi Haji Mohabbatali.	
	Dr. Nasir Mohammad.	
	Babu Durga Prasanna Bhattacharjee.	
III. Kanchana ..	Maulvi Niyazur Rahman ..	Babu Kamini Kumar Ghosh, M.A., B.L.
	Babu Nishi Chandra Ghosh.	Babu Manindra Lal Nandi.
	Maulvi Abdul Wahab.	Maulvi Ezhar Mian.
	Munshi Sayed Saifur Rahman Master.	
	Maulvi Abdul Jalil.	
	Babu Manindra Nath Dutta.	
IV. Eochia ..	Munshi Faizur Rahman Matbar ..	Babu Mohendralal Das.
	Munshi Kadir Bukhsh Chaudhury.	Babu Jogendranath Dhar.
	Munshi Nazir Ahmad.	Maulvi Wahedali Sikdar.
	Munshi Moniruzzeman.	
	Dr. Shakur Ali.	
	Maulvi Ekram Rasul Choudhury.	
V. Dhemsa ..	Babu Barada Ranjan Chaudhury ..	Maulvi Mofzalur Rahman Chaudhury, B.L.
	Babu Suresh Chandra Chaudhury.	Maulvi Wadiatur Rahman.
	Maulvi Haji Wali Bakhsh.	Maulvi Obaidur Rahman.
	Maulvi Ramzan Ali Chaudhury.	
	Maulvi Buzur Chemeher.	
	Munshi Chunna Mian Master.	
VI. Keochia ..	Maulvi Shafiqur Rahman Chaudhury	Maulvi Rahim Bakhsh Chaudhury.
	Maulvi Abdul Majid.	Maulvi Hedayet Ali Talukdar.
	Babu Jogesh Chandra Rakshit	Babu Ramesh Chandra Nandi.
	Maulvi Obaidur Rahman Chaudhury.	
	Maulvi Ali Ahmad Chaudhury.	
	Munshi Zulkadar Sikdar.	
VII. Bazalia ..	Maulvi Solaiman Ahmad Chaudhury	Babu Mahendra Lal Nandi.
	Maulvi Ibney Amin.	Mon Hree Saudagar.
	Babu Hem Chandra Bhattacharjee.	Maulvi Mahboobali Chaudhury.
	Maulvi Azizur Rahman Sikdar.	
	Maulvi Badiur Rahman Sikdar.	
	Maulvi Motiur Rahman Sikdar.	
VIII. Purangarh ..	Maulvi Md. Bacha Mian ..	Babu Har Kishore Barua.
	Maulvi Solaiman Sikdar.	Babu Jogesh Chandra Das Sikdar.
	Maulvi Mohabbatali Saudagar.	Maulvi Mustafizur Rahman.
	Maulvi Abdul Gafur Sikdar.	
	Maulvi Badiur Rahman Sikdar.	
	Maulvi Fazlul Haq Chaudhury.	
IX. Sadaha ..	Maulvi Mazharul Wadud ..	Babu Barada Charan Chakrabarty.
	Maulvi Azizur Rahman Mian.	Maulvi Fakir Mohammad.
	Maulvi Abul Hosain.	Maulvi Raihan Ali.
	Maulvi Mian Bazal Ahmad.	
	Maulvi Mian Abdul Wadud.	
	Munshi Saiyadullah.	
X. Satkania ..	Haji Asgar Ali Dovashi ..	Maulvi Buzur Chomeher Chaudhury.
	Haji Faizar Rahman.	Maulvi Abdul Wadud Chaudhury.
	Maulvi Kadir Bakhsh Sikdar.	Babu Ananga Mohan Nath.
	Maulvi Ahmad Kabir Chowdhury.	
	Maulvi Mafzal Ahmad Chowdhury.	
	Maulvi Emdadur Rahman Chowdhury.	
XI. Sonakania ..	Maulvi Anoo Mia Chaudhury ..	Maulvi Abdul Quddus.
	Maulvi Siddiq Ahmad Chaudhury.	Maulvi Syed Sultan Ahmad.
	Haji Basharat Ali Sikdar.	Babu Chandra Kumar Dhar.
	Maulvi Fazlul Kabir.	
	Dr. Irshad Ali Chaudhury.	
	Maulvi Abdul Wadud Chaudhury.	

Union board.	Elected members.	Nominated members.
1	2	3
XII. Barahatiya ..	Maulvi Torabuddin Sikdar ..	Maulvi Abdur Rahman.
	Babu Surendra Nath Pal, B.L.	Maulvi Fazal Karim
	Babu Akhil Chandra Nath.	Maulvi Mosharrafali.
	Maulvi Jalik Bakhsh.	
	Maulvi Abdus Salam.	
	Babu Mohan Banshi Nath.	
XIII. Amirabad ..	Maulvi Ashrafali Choudhury ..	Maulvi Abdul Wadud Choudhury.
	Maulvi Yusuf Ali Choudhury.	Babu Basanta Kumar Das.
	Dr. Pulin Behari Pal Choudhury.	Babu Umesh Chandra Choudhury.
	Munshi Ahmadur Rahman.	
	Munshi Nurul Islam.	
	Maulvi Tajammul Ali Sikdar.	
XIV. Padua ..	Babu Sachindra Kumar Gupta ..	Maulvi Abdul Fattah.
	Babu Sasanka Sekhar Gupta.	Maulvi Ahmadullah.
	Maulvi Nazir Ahmad Choudhury.	Babu Bepin Chandra Das.
	Maulvi Abdul Kuddus.	
	Maulvi Azamullah.	
	Munshi Niyamat Ali Master.	
XV. Charamba ..	Babu Sashi Kumar Chaudhury ..	Maulvi Ahmadur Rahman.
	Babu Jadu Nath Chaudhury.	Maulvi Nurullah Saudagar.
	Babu Jogesh Chandra Chaudhury.	Maulvi Abdul Jalil.
	Babu Radha Krishna Chaudhury.	
	Maulvi Abdul Hakim.	
	Maulvi Emdad Hosain.	
XVI. Kalauzan ..	Maulvi Abdur Rahman ..	Munshi Azamullah Sikdar.
	Babu Rebati Raman Choudhury.	Munshi Abdul Aziz Talukdar.
	Babu Sashi Kumar Das.	Munshi Abdul Bari Talukdar.
	Babu Durga Prasad Sikdar.	
	Babu Akhil Chandra Nath.	
	Babu Har Kumar Sikdar.	
XVII. Lohagara ..	Maulvi Mofizur Rahman ..	Babu Khemesh Chadnra Pal Choudhury.
	Maulvi Rizwan Amin.	Babu Satish Chandra Barua.
	Maulvi Obaidur Rahman.	Maulvi Md. Ismail.
	Maulvi Abdul Hakim.	
	Maulvi Taiyabullah Saudagar	
	Babu Bikarna Pal Choudhury.	
XVIII. Chunati ..	Maulvi Estafazur Rahman Khan ..	Maulvi Md Mohsen.
	Maulvi Taher Ahmed Khan.	Maulvi Md. Barekullah Mian.
	Maulvi Bashir Ahmad.	Babu Purna Chandra Barua.
	Maulvi Md. Danesh.	
	Maulvi Hashmatullah.	
	Maulvi Sultan Ahmad Master.	
XIX. Gorastan ..	Maulvi Hamidur Rahman ..	Maulvi Fateh Ali.
	Maulvi Abdul Gaffar Saudagar.	Maulvi Ramzan Ali.
	Maulvi Abdur Rahman Chaudhury.	Maulvi Obaidul Mannan.
	Maulvi Gunu Mian Choudhury.	
	Babu Gurudas Nag.	
	Babu Kala Chand Barua.	
	Patiya police-station.	
I. Charlakhya ..	Munshi Ashraf Ali ..	Maulvi Hafez Ahmad.
	Munshi Abdul Hamid.	Munshi Siddiq Ahmad.
	Munshi Noor Ahmed.	Munshi Mansur Ali.
	Munshi Alimullah.	
	Munshi Matiar Rahman.	
	Munshi Amir Hossain.	
II. Barauthan ..	Maulvi Shor Ali Khan Chaudhury..	Maulvi Fazlur Rahman Khan, B.L.
	Babu Chandra Kumar Dhar.	Maulvi Badrul Haq Khan, B.L.
	Munshi Ashraf Ali	Babu Prasanna Kumar Dhar, B.L.
	Munshi Abdul Jalil Choudhury.	
	Maulvi Md. Ahmed Choudhury	
	Munshi Abdur Rahim Saudagar.	

Union board.	Elected members.	Nominated members.
1	2	3
III. Sikalbaha ..	Khan Sahib Haji Omra Meah Choudhury. Munshi Rahim Ali. Munshi Tazu Meah Choudhury. Munshi Sayed Ahmed. Munshi Siddiq Ahmed. Munshi Md. Nasim.	Maulvi Abdul Moiz. Munshi Abdur Rahim. Munshi Abu Ahmad.
IV. Kolagaon ..	Haji Abdur Rahman Choudhury .. Maulvi Mohammad Dila Meah Choudhury. Maulvi Mohammad Khayerullah Miaji. Babu Ramesh Chandra Choudhury. Babu Purna Chandra Sarcar. Elected member is dead.	Munshi Faiz Ahmad. Munshi Osiuddin. Babu Tejendra Lal Sirkar.
V. Habilashdwip ..	Munshi Ekhlas Meah Choudhury .. Munshi Malakezzama. Munshi Abdur Rahim. Babu Umesh Chandra Sen. Munshi Jobel Ahmed Choudhury. Babu Bama Charan Das Choudhury.	Munshi Khalilur Rahman. Dr. Abdus Sattar. Babu Dhirendra Nath Mazumdar.
VI. Kusumpura ..	Munshi Amzu Meah Choudhury .. Maulvi Shamshuddin Ahmed. Munshi Thanda Meah Maulvi Muhammad. Maulvi Ekbal Ahmed Khan. Maulvi Mohammad Isaque.	Munshi Jalil Bakhsh Sawdagar. Munshi Abdur Rashid. Munshi Syed Siddiq Ahmad.
VII. Jiri ..	Munshi Abdur Kader .. Munshi Abu Mohammad Danesh. Munshi Yusuf Ahmed. Munshi Sayed Abdur Sabur. Munshi Fazlul Karim Choudhury. Munshi Basharat Ali Sikdar.	Maulvi Mir Mazharul Haque. Maulvi Md. Ahmad. Babu Chandra Kumar Das.
*VIII. Kashiaish ..	Babu Jugal Kishore Barua .. Munshi Ebadat Ali. Babu Nalini Ranjan Sikdar. Maulvi Azizur Rahman Choudhury. Munshi Siddique Ahmad. Munshi Aminur Rahman Choudhury.	Munshi Bacha Mian Choudhury. Babu Sarada Ch. Biswas. Babu Kaimini Kumar Bardhan.
IX. Jungalkhine ..	Babu Nabin Chandra Barua .. Munshi Abdul Majid. Munshi Ayub Ali. Munshi Azizar Rahman Choudhury. Haji Yar Ali Choudhury. Maulvi Kaimuddin.	Munshi Neamat Ali Sada. Munshi Asmat Ali Sowdagar. Babu Purnendu Bikash Nandi.
X. Dhalghat ..	Munshi Ainuddin Choudhury .. Babu Harish Chandra Choudhury. Babu Satish Chandra Das. Babu Jogendra Nath Palit. Babu Pran Krishna Chakrabarty. Babu Ram Chandra Sen.	Babu Jamini Ranjan Choudhury. Maulvi Saidur Rahman Sowdagar. Maulvi Ashrafali Choudhury.
XI. Kelishahar ..	Babu Har Govinda Bhattacherjee .. Haji Yusuf Ali. Babu Dakshina Ranjan Choudhury. Babu Bepin Behari Bhattacherji. Babu Durga Charan Bhattacherji. Munshi Sayder Rahman.	Munshi Aku Mian Pandit. Munshi Arban Ali. Babu Sarada Ch. Barua.
XII. Haidgao ..	Munshi Lal Meah Master .. Maulvi Md. Jan Baksha. Maulvi Nasarat Ali. Maulvi Tafazzul Hossain. Maulvi Khalilur Rahman Doctor. Munshi Syed Ahmed	Babu Shiva Prasad Sen. Babu Judhistir Mandal, B.L. Babu Jnanada Ranjan Dutta, B.L.

Union board.	Elected members.	Nominated members.
1	2	3
XIII. Suchakradandi ..	Babu Sasanka Mohan Das Gupta ..	Babu Krishna Kumar Mazumdar, B.L.
	Munshi Khalilar Rahman.	
	Babu Nabin Chandra Dey.	Maulvi Abdul Karim Bidya Bisharad.
	Babu Nagendra Lal Datta.	
	Maulvi Ahamed Kabir.	Munshi Md. Asad Ali.
	Munshi Abdul Majid.	
XIV. Patiya ..	Maulvi Mukhlesur Rahman ..	Babu Nabin Chandra Bhattacharji.
	Munshi Fazal Ahmad.	Babu Baikuntha Behari Chowdhury.
	Munshi Aminur Rahman.	Munshi Nurul Islam.
	Maulvi Md. Elahdad.	
	Munshi Monir Ahmed.	
	Babu Jogendra Chandra Chowdhury.	
XV. Chhanahara ..	Babu Jagabandhu De, B.A., B.T. ..	Babu Hemanga Bhusan Guha.
	Babu Jogendra Chandra Dutta.	Maulvi Mustafizur Rahman.
	Babu Keshab Chandra Bhattacharji	Maulvi Md. Rashidun Nabi.
	Babu Hriday Ranjan Dastidar, B.L.	
	Munshi Osiur Rahman.	
	Munshi Rafiuddin.	
XVI. Kachuai ..	Munshi Faiz Ali Choudhury ..	Maulvi Atar Ali Choudhury.
	Munshi Ala Meah Choudhury.	Maulvi Ahmad Mian Faroqui.
	Babu Bimal Chandra Das.	Babu Purna Chandra Bhattacharji.
	Babu Jamini Ranjan Biswas.	
	Munshi Nur Ahmed.	
	Babu Nagendra Chandra Rudra.	
XVII. Kharana ..	Maulvi Abdul Gani Choudhury ..	Maulvi Abdul Kadir.
	Munshi Bacha Meah Choudhury.	Munshi Obaidur Rahman.
	Munshi Shafikar Rahman.	Babu Basanta Kumar De.
	Munshi Chunnu Meah Choudhury.	
	Munshi Sayed Abu Mahammad Ibrahim.	
	Babu Benode Behari Choudhury.	
XVIII. Joara ..	Babu Girindra Chandra Majumdar..	Haji Abdur Rahman.
	Munshi Bacha Meah Choudhury.	Munshi Abdul Hakim.
	Munshi Fazal Ahmed Choudhury.	Babu Rohini Ranjan Sen, B.L.
	Munshi Abul Khayer Choudhury.	
	Munshi Arban Ali Sadagar.	
	Munshi Akmal Meah Choudhury.	
XIX. Barkal ..	Election of this board has been postponed until further orders.	....
XX. Barama ..	Babu Nirmal Chandra Choudhury..	Babu Ambika Ch. Bhattacharji.
	Babu Kamini Kumar Guha.	Munshi Ramzan Ali Choudhury.
	Munshi Syed Abdul Haque.	Munshi Md. Bakhsh.
	Babu Basanta Kumar De (Master).	
	Munshi Aminul Hoque Choudhury.	
	Munshi Abdul Wadud Sadagar.	
XXI. Bailtali ..	Maulvi Siddique Ahmed, B.L. ..	Babu Surendra Lal De.
	Haji Basharat Ali Choudhury.	Babu Jogendra Lal Sen.
	Munshi Amin Sharif Choudhury.	Munshi Abul Khair Choudhury.
	Haji Altaf Mean Choudhury.	
	Munshi Abdur Razzak.	
	Munshi Abdul Quader.	
XXII. Satbaria ..	Maulvi Ahmed Hossain ..	Babu Bepin Ch. Barua.
	Munshi Zakir Ahmed Saudagar.	Munshi Badu Mian.
	Munshi Moslem Ahmed.	Munshi Ehsan Ali.
	Munshi Mohammad Ali.	
	Munshi Nur Ahmed.	
	Munshi Hamid Sharif.	

Union board.	Elected members.	Nominated members.
1	2	3
XXIII. Hashimpur ..	Munshi Aflatun Choudhury ..	Dr. Dilawar Hosain.
	Munshi Abdul Kader Choudhury.	Munshi Basharat Ali Matbar.
	Babu Jubaraj Choudhury.	Babu Nikunja Behari Dhar.
	Munshi Fazal Karim Choudhury.	
	Babu Narendra Kumar Dutta.	
	Munshi Abdul Kader Choudhury.	
XXIV. Dohazari ..	Munshi Syed Ahmed Choudhury ..	Munshi Nurul Absar Choudhury.
	Babu Surjya Kumar Bhattacherjee.	Munshi Amin Sharif.
	Munshi Matiar Rahman.	Munshi Syed Ahmad Master.
	Munshi Wahed Bux.	
	Munshi Abdul Jabbar.	
	Munshi Amju Meah.	
	Boalkhali police-station.	
I. Kadhurkhil ..	Maulvi Md. Naki ..	Munshi Dalilur Rahman.
	Babu Nalini Behari Choudhury.	Munshi Mafzal Ahmad Choudhury.
	Munshi Abul Bashar.	Babu Nagendra Chandra Das.
	Munshi Amir Hossain Choudhury.	
	Babu Paresh Chandra Biswas.	
	Babu Gagan Chandra Das.	
II. West Gomdandi ..	Maulvi Ali Ahmed Choudhury ..	Munshi Nuruzzeman.
	Munshi Sultan Ahmed.	Munshi Aminullah Master.
	Munshi Md. Nurullah.	Munshi Abdur Rahman.
	Babu Priya Nath Barua.	
	Munshi Khalilur Rahman.	
	Munshi Aminal Hoque Meah.	
III. East Gomdandi ..	Munshi Minnat Ali Choudhury ..	Munshi Abdus Sobhan.
	Babu Ram Tanu Nath.	Munshi Abdul Kader.
	Munshi Talebullah Choudhury.	Babu Sarada Ch. Choudhury.
	Munshi Azizur Rahman Choudhury.	
	Munshi Hamidul Haque.	
	Munshi Abdul Latif Choudhury.	
IV. Sakpura ..	Maulvi Abdul Kader Sowdagar ..	Munshi Yakub Ali.
	Babu Nalini Ranjan Dutta, B.L.	Munshi Motiur Rahaman.
	Babu Surendra Bejoy Choudhury, B.L.	Babu Rajani Kanta Baidya.
	Babu Rajani Ranjan Choudhury.	
	Munshi Amir Hossain Choudhury.	
	Munshi Noor Ahmed.	
V. Saroatali ..	Maulvi Md. Anoo Meah Choudhury	Maulvi Nur Ali Khan Mukhtar.
	Munshi Bazlur Rahman.	Munshi Nuruzzeman Choudhury.
	Babu Rajani Kanta Das.	Babu Debendra Lal Baidya.
	Babu Kshetra Mohan Sen.	
	Maulvi Syed Siddique Ahmed.	
	Babu Jagatbandhu Mahajan.	
VI. Popadia ..	Munshi Abdul Latif ..	Maulvi Syed Md. Soleman.
	Munshi Abdul Haque.	Maulvi Leakat Ali Sowdagar.
	Munshi Abdul Halim.	Babu Kali Mohan Bhattacharji.
	Babu Nirmal Chandra Dutta.	
	Babu Sumati Prasad Lala.	
	Munshi Jamaluddin Ahmed.	
VII. Kharandwip ..	Maulvi Delwar Hossain Choudhury.	Maulvi Md. Ismail.
	Munshi Abdul Majid Khan.	Maulvi Abul Bashar Farooqui.
	Munshi Waijuddin Moaji.	Babu Ambika Ch. Barua.
	Haji Ahmedur Rahman.	
	Munshi Mahammad Soleman.	
	Munshi Md. Idris Meah.	
VIII. Sripur ..	Babu Mon Mohan Kanungo ..	Babu Surendra Bejoy Choudhury.
	Munshi Abdul Kader.	Munshi Enuzur Rahman.
	Babu Hridoy Ranjan Sen.	Munshi Abdul Haque.
	Babu Nabin Chandra Barua.	
	Babu Bhupati Mohan Dutta.	
	Babu Durgadas Chakrabarty.	

Union board.	Elected members.	Nominated members.
1	2	3
IX. Karaldonga ..	Munshi Waijuddin Matbar ..	Babu Mohendra Lal Choudhury.
	Munshi Md. Anu Meah.	Babu Mohini Mohan Barua.
	Babu Jamini Ranjan Choudhury.	Munshi Basharat Ali
	Babu Bibhuti Bhusan De.	
	Munshi Ali Munshi.	
	Munshi Mobarok Ali.	
	Anwara police-station.	
I. Bairag ..	Babu Rajani Kumar Choudhury ..	Munshi Anwar Ali.
	Munshi Zainuddin.	Munshi Hamid Ali Choudhury.
	Munshi Hashmat Meah Choudhury	Babu Bancha Ram Gupta.
	Babu Jagabandhu Dutta.	
	Munshi Nazir Ahmed of Bairag.	
	Munshi Nazir Ahmed of Guapanchak.	
II. Barasat ..	Haji Minnat Ali Dovash ..	Munshi Nazir Ahmad.
	Munshi Gura Meah.	Munshi Osi Mian.
	Babu Jagat Chandra Nath.	Munshi Badiuzzeman.
	Haji Ekhlasur Rahman.	
	Munshi Amir Hossain Dovash.	
	Munshi Omda Meah.	
III. Raipur ..	Munshi Abdul Aziz ..	Maulvi Nooruddin.
	Munshi Md. Safdar Ali Choudhury.	Munshi Akamuddin.
	Haji Fakir Mahammad Choudhury.	Munshi Azizur Rahman.
	Munshi Wahed Ali.	
	Munshi Siddique Ahmed.	
	Munshi Anwar Ali.	
IV, Battali ..	Munshi Golam Sobhan Master ..	Maulvi Abdul Aziz Choudhury.
	Munshi Waizuddin Hafez.	Munshi Abdur Rahim.
	Munshi Yakubali Choudhury.	Babu Ram Kumar Dhar.
	Munshi Kalimuddin.	
	Babu Jatindra Lal Dey.	
	Munshi Amir Ali.	
V. Burumchora ..	Munshi Md. Chand Meah Choudhury.	Munshi Sultan Ahmed Choudhury.
	Munshi Sultan Ahmed.	Munshi Osiur Rahman Thikadar.
	Haji Faiz Ahmed Choudhury.	Munshi Imam Sharif.
	Munshi Fazle Ahmed.	
	Maulvi Farrokh Ahmed.	
	Munshi Nazir Ahmed.	
VI. Barakhine ..	Munshi Rehanuzzaman Doctor ..	Babu Gour Sundar De.
	Maulvi Md. Jafarul Ezdani Choudhury.	Maulvi Abdul Jalil, B.L.
	Maulvi Yar Ali Khan Choudhury.	Mr. A. R. Nizam, M.Sc.
	Maulvi Habibur Rahman Choudhury.	
	Munshi Amirazzaman.	
	Munshi Thanda Meah.	
VII. Anwara ..	Munshi Obaidur Rahman ..	Babu Mokshoda Ranjan Das.
	Munshi Abdul Karim.	Babu Iswar Chandra Chakrabarty
	Munshi Siddique Ahmed Choudhury.	Maulvi Md. Ibrahim, B.L.
	Babu Birendra Lal De.	
	Babu Nagendra Lal Choudhury.	
	Babu Mohan Banshi Bhomik.	
VIII. Paraikora ..	Babu Surendra Mohan Bhattacherjee.	Rai Kshirod Chandra Roy Bahadur, B.A.
	Munshi Mohammad Meah.	Maulvi Abdul Majid.
	Babu Homendra Lal Das.	Maulvi Altaf Ahmad.
	Babu Surendra Lal Barua.	
	Babu Manindra Lal Mitra Das.	
	Munshi Ramizuddin Master.	
IX. Haildhar ..	Maulvi Abdul Karim Choudhury ..	Munshi Abu Sayed Choudhury.
	Maulvi Asrarul Hoque Choudhury.	Munshi Sultan Ahmad.
	Babu Bimala Charan Pal Choudhury.	Babu Sarada Charan Biswas.
	Babu Sudhangshu Badan Choudhury.	
	Munshi Belayet Ali Choudhury.	
	Munshi Hafizar Rahman Choudhury.	

A. S. HANDS, *District Magistrate.*

Orders by the Deputy Inspector-General of Police, Bakarganj Range.

Barisal.—No. 1017.—28th February 1935.—Mr. J. Irvine, Armed Inspector, Chittagong, is granted leave out of India for 20 months, viz., leave on average pay for 5 months, under rule 81 (*b*) (*ii*) of the Fundamental Rules, and leave on half average pay for the remaining period, under rule 81 (*d*) of those Rules, with effect from the 25th March 1935, p.m.

G. H. MANNOOCH,
Deputy Inspector-General of Police (offg.).

Dacca Division—Dacca.

No. 969J.—26th February 1935.—It is hereby notified for general information that, under rule 20 (*b*) of the manual of rules for the management of charitable hospitals and dispensaries in Bengal, published with Government notification No. 138T. Medl., dated the 7th June 1915, the following gentlemen are appointed to be members of the committee for the management of the charitable dispensary at Rajoir in the district of Faridpur:—

The Sub-Registrar, Rajoir (*ex-officio*).
The Sub-Inspector of Police, Rajoir (*ex-officio*).
The Muhammadan Marriage Registrar, Rajoir (*ex-officio*).
Babu Bijan Chandra Roy Choudhury, B.A.
Babu Debesh Chandra Roy.
Babu Haralal Chakraborty.
Babu Gajali Chandra Biswas.
Babu Pyari Mohan Ghosh.
Maulvi Md. Jonab Ali.
Munshi Aftabuddin Ahmed.
Munshi Baherali.
Munshi Osman Gani Bepari.

No. 984J.—26th February 1935.—In exercise of the powers conferred on me by rule 691A, Chapter XVIIA, Volume I of the Bengal Jail Code, 1919, I hereby appoint Quari Muhammad Hossain to be an honorary teacher for Muhammadan prisoners in the District Jail at Barisal, in place of Maulvi Sultan Alom, on leave.

No. 988J.—26th February 1935.—In exercise of the powers conferred on me by rule 691A, Chapter XVIIA, Volume I, of the Bengal Jail Code, 1919, I hereby re-appoint Babu Sital Chandra Banerjee, teacher, Barisal Girls' School, to be an honorary teacher for Hindu prisoners in the District Jail at Barisal for a further period of two years with effect from the 23rd January 1935.

No. 1018J.—28th February 1935.—It is hereby notified for general information that at the by-election held under section 42 of the Bengal Municipal Act, 1932, on the 16th January 1935 in Ward No. I of the Madaripur Municipality in the district of Faridpur, the following gentlemen have been duly elected as Commissioners:—

Babu Surendra Mohan Saha.
Babu Jogendra Nath Mathar.

No. 1021J.—28th February 1935.—It is hereby notified for general information that, under rule 23 of the manual of rules for the management of charitable hospitals and dispensaries in Bengal, published with Government notification No. 138T.—Medl., dated the 7th June 1915, Maulvi Nizamuddin, B.A., is appointed to be a member of the committee for the management of the charitable dispensary at Sankrail in the Tangail subdivision of the Mymensingh district, in place of Babu Manmatha Nath Sen, deceased.

W. H. NELSON, *Commissioner.*

Barisal, the 25th February 1935.

No. 1229J.—It is hereby notified for general information that, under section 13 of the Bengal Village Self-Government Act (Bengal Act V of 1919), Babu Jatindra Nath Sinha has been duly elected to be a member of the Charadi union board within police-station Bakarganj in the Sadar (South) subdivision of the Bakarganj district, *vice* Babu Jitendra Nath Sinha, resigned.

No. 1233J.—It is hereby notified for general information that, under section 13 of the Bengal Village Self-Government Act (Bengal Act V of 1919), Munshi Kalu Sikdar has been duly elected to be a member of the Kalisuri union board within police-station Baufal in the Patuakhali subdivision of the Bakarganj district, *vice* Munshi Fazle Ali Sikdar, deceased.

K. P. SEN, for *District Magistrate.*

Orders by the Deputy Inspector-General of Police, Dacca Range.

Dacca.—No. 736.—21st February 1935.—Babu Jogini Mohan Basu, Inspector, District Intelligence Branch, Dacca, is granted 3 months' privilege leave.

Babu Jitendra Mohan Dhar, Inspector, District Intelligence Branch, Dacca, is granted 12 days' leave on average pay in extension of the leave already granted to him.

No. 876.—28th February 1935.—Sub-Inspector Badruddin Ahmad of Faridpur, is appointed to act as Inspector, *vice* Babu Jagadish Chandra Banarji, Inspector of that district, granted leave.

On being relieved of his officiating appointment by Maulvi Badruddin Ahmad, Maulvi Muhammad Idris (No. II), officiating Inspector, will revert to his substantive rank of Sub-Inspector and return to the district of Mymensingh.

The transfer is effected in the interests of public service.

R. M. WRIGHT,
Deputy Inspector-General of Police.

Presidency Division—Calcutta.

Erratum. — No. 373M. — 26th February 1935.—In the 5th line of this office notification No. 22M., dated the 3rd January 1935, which was published in Part I, page 115 of the *Calcutta Gazette* of the 17th January 1935, *for* Mr. G. M. Garric *read* Mr. G. M. Garrie.

A. Z. KHAN, *Personal Assistant*,
for *Commissioner*.

Alipore, the 19th February 1935.

No. 24/35-5-V.S.-G.—It is hereby notified for general information that, under section 13 of the Bengal Village Self-Government Act (Act V of 1919), Munshi Maniruddin Mondal has been appointed to be a member of the Dhopdhopi union board in police-station Baruipur in the Sadar subdivision of the district of 24-Parganas, in place of Munshi Rezuddin Gazi, deceased.

S. N. RAY, *Addl. District Magistrate*.

Berhampore, the 1st March 1935.

It is hereby notified for general information that—

(a) Under sub-section (2) of section 6 of the Bengal Village Self-Government Act, 1919 (Bengal Act V of 1919), the following gentlemen have been duly elected to be members of the under-mentioned union boards in police-stations noted above each in the Kandi subdivision of the Murshidabad district:—

Barwan police-station.

Union No. I—Kallyanpur union board.

Babu Haridas Chatterjee.
Babu Mrityunjoy Chatterjee.
Munshi Efraj Hossain.
Munshi Mohammad Newaj Ali.
Babu Kishori Mohan Mandal, B.A.
Babu Shayma Pada Roy.

Union No. II—Kuli union board.

Munshi Gahar Ali.
Munshi Mohammad Ali Newaj.
Munshi Mohammad Khoda Bux.
Babu Jogesh Chandra Pathak.
Munshi Mohammad Maniruddin.
Munshi Mohammad Naziruddin.

Union No. III—Sabaldah union board.

Babu Panchanan Mandal.
Babu Gopesh Chandra Roy.
Maulvi Syed Abdur Rezzaque.
Babu Kanti Chandra Ghosh.
Babu Sreebas Mandal.
Babu Sambhu Nath Roy.

Union No. IV—Biprasekhar union board.

Babu Sharojaksha Chakraverty.
Babu Radhagovinda Chakraverty.
Babu Manmatha Nath Saha.
Babu Chandra Bhusan Hazra.
Babu Aghore Nath Mukherjee.
Babu Bidhu Bhusan Ghosh.

Union No. V—Barwan union board.

Babu Bankim Narayan Nayek.
Maulvi Kazi Abul Barkat.
Babu Bhut Bhaban Das.
Babu Kalipada Ghosh.
Maulvi Abdur Rahman.
Babu Kalika Nanda Bhattacharya.

Union No. VI—Sehora union board.

Babu Jana Ranjan Roy.
Babu Surendra Narayan Pal.
Babu Harisankar Ghosh.
Babu Bhupati Nath Adhikari.
Babu Braja Shyam Das Gupta.
Babu Gour Gopal Pal.

Union No. VII—Kurunnarun union board.

Babu Kumarish Chandra Mukherjee.
Babu Ashutosh Sarkar.
Babu Rohini Kumar Bannerjee.
Babu Shyamapada Mukherjee.
Munshi Satkari Khan.
Babu Kalidas Mukherjee.

Union No. VIII—Sundarpur union board.

Maulvi Ziauddin Ahmed.
Babu Sarat Chandra Mukherjee.
Munshi Abdul Latif.
Munshi Abdul Hakim.
Babu Pundarikakshya Sarkar.
Munshi Abdur Rashid.

Union No. IX—Panchthupi union board.

Babu Subodh Krishna Ghosh Moulick.
Babu Raghu Kumar Ghosh Roy.
Babu Jaladhar Chandra.
Babu Jasoda Dulal Adhikary.
Babu Jamuna Prasanna Sinha.
Babu Nitya Gopal Dutta.

Bharatpur police-station.

Union No. I—Jajan union board.

Babu Kumar Krishna Ghosh.
Babu Satish Chandra Adhikary.
Babu Jotish Chandra Sarkar.
Babu Sarat Chandra Ghosh.
Babu Abhoya Pada Chakraverty.
Babu Satyendra Mohan Sinha Choudhury.

Union No. II.—Alugram union board.

Babu Radha Shyam Das.
Babu Nitya Gopal Chatterjee.
Babu Nani Gopal Goswami.
Babu Rudra Kali Das.
Maulvi Syed Ehsan Ali.
Babu Nani Gopal Das.

Union No. III—Amlai union board.

Babu Jadu Nath Roy, B.L.
Babu Bhola Nath Sarkar.
Babu Jatindra Nath Mandal.
Babu Kumarish Chandra Mukherjee.
Babu Abanipati Bhattacherjee.
Babu Kopin Chandra Mandal.

Union No. IV—Sijgram union board.

Maulvi Khondkar Mohammad Abu Ahsan.
Maulvi Khondkar Mohammad Ali Ahsan.
Maulvi Khondkar Mohammad Abi Ahsan.
Maulvi Khondkar Mohammad Fazle Quader Abu Jamil.
Maulvi Syed Gholam Ghous.
Babu Sashi Bhusan Pal.

Union No. V—Bharatpur union board.

Hakim Maulvi Haji Mohammad Yasin Siddiqui.
Munshi Syed Abdul Jobber.
Maulvi Shah Mohammad Abul Waresh.
Munshi Mohammad Hossain.
Munshi Syed Jiauddin.
Munshi Syed Hossain Ali.

Union No. VI—Talgram union board.

Munshi Mohammad Abdur Rezzaque.
Munshi Abdul Gani.
Babu Gobinda Chandra Roy.
Munshi Mohammad Siadot Hossain.
Babu Surya Narayan Saha.
Babu Umesh Chandra Saha.

Union No. VII—Godda union board.

Babu Dakshina Ranjan Mukherjee.
Babu Radha Prasanna Ghosh.
Munshi Mohammad Sad Imani.
Babu Brindaban Chandra Dutta.
Munshi Mohammad Taha.
Babu Radha Pada Bannerjee.

Union No. VIII—Malihati union board.

Babu Ganga Narayan Roy.
Babu Kali Kumar Das.
Babu Rohini Kumar Das.
Munshi Osman Ghani.
Munshi Mohammad Hossain.
Babu Radha Sundar Roy.

Union No. IX—Baidyapur union board.

Babu Sasanka Sekhar Misra.
Babu Umapada Bannerjee.
Babu Arun Chandra Sarkar.
Babu Dwijapada Pal.
Babu Kalipada Sinha Roy.
Babu Durga Das Mukherjee.

Union No. X—Simulia-Banwaribad union board.

Babu Pramatha Nath Mukherjee.
Babu Gouri Prasad Mukherjee.
Munshi Mohammad Abdul Makid.
Babu Mahima Ranjan Chakraverty.
Munshi Mohammad Golam Sobhan.
Babu Tara Prasanna Misra.

Union No. XI—Salar union board.

Choudhury Nurul Haque Mohammad Abul Fayez.
Hafez Choudhury Maulvi Abdul Azim.
Maulvi Mohammad Jille Kadir Choudhury.
Munshi Mohammad Muzharal Jamal.
Munshi Mohammad Manzur Ali.
Maulvi Kazi Mohammad Hossain.

Union No. XII—Kagram-Talibpur union board.

Maulvi Mohammad Golam Gous.
Maulvi Mohammad Golam Jilani.
Maulvi Mohammad Golam Gilani.
Maulvi Mohammad Golam Mahboob.
Maulvi Mohammad Jiller Rahim.
Munshi Mohammad Abdul Kader.

Kandi police-station.

Union No. I—Kumarsanda union board.

Munshi Eradat Molla.
Babu Sita Nath Gope.
Munshi Shaikh Rakhal Mandal.
Munshi Mohammad Based Ali Sekh.
Babu Judhistir Ghosh Mandal.
Babu Anil Kumar Bhattacherjee.

Union No. II—Mahalandi union board.

Babu Indra Chandra Bannerjee.
Babu Kali Prasanna Ghosn.
Babu Sundar Gopal Chandra.
Munshi Mohammad Furroque Hossain.
Babu Devendra Narayan Mandal.
Babu Nrisinha Das Roy Choudhury.

Union No. III—Gokarna union board.

Babu Hem Chandra Bannerjee.
Babu Bhola Nath Roy Choudhury.
Babu Tripura Charan Roy.
Babu Pran Gopal Roy.
Babu Gour Krishna Ghosh.
Babu Baidyanath Charan Pande.

Union No. IV—Purundarpur union board.

Babu Purnananda Misra.
Munshi Shaikh Mohammad Jaffar.
Haji Munshi Shaikh Rahamatulla.
Munshi Shaikh Kalimuddin.
Babu Chakradhar Trivedi.
Babu Sarat Chandra Trivedi.

Union No. V—Andulia union board.

Babu Jnanananda Misra.
Babu Bibhuti Bhusan Roy.
Munshi Mohammad Sarif Khan.
Babu Pashupati Mukherjee.
Babu Hrishikesh Chakraverty.
Babu Jogendra Narayan Ghosh.

Union No. VI—Jasohari-Anukha union board.

Babu Satish Chandra Trivedi.
Babu Jnanada Prasad Trivedi.
Munshi Shaikh Samsuddin.
Babu Bhaba Taran Ghose.
Babu Ashutosh Choubey.
Babu Devendra Nath Upadhya, B.L.

Khargram police-station.

Union No. I—Padam-Kandi union board.

Babu Girija Kinkar Roy.
Munshi Shaikh Belaluddin.
Babu Kalika Mohan Sarkar.
Babu Brajendra Nandan Nashipuri.
Babu Govinda Chandra Ghosh.
Babu Khagendra Nath Maulick.

Union No. II—Jhilli union board.

Munshi Harun-al-Rashid.
Munshi Jamsed Hossain.
Babu Parbati Kinkar Chatterjee.
Munshi Shaikh Abdul Jobber Mandal.
Munshi Shaikh Shamsuddin Mandal.
Babu Satya Ranjan Das.

Union No. III—Indrani union board.

Babu Amita Prasad Das.
Maulvi Syed Ali Hyder.
Munshi Syedur Rahaman.
Syed Mohammad Reza.
Babu Hem Chandra Mandal.
Munshi Syed Fazle Ahmed.

Union No. IV—Parulia union board.

Babu Chakrapani Roy Choudhury.
Babu Narendra Narayan Roy Choudhury.
Munshi Ainal Haque.
Munshi Abdul Wahed.
Babu Manindra Chandra Mandal.
Munshi Shaikh Jahiruddin.

Union No. V—Eroali union board.

Babu Kalipada Roy Choudhury.
Munshi Shaikh Sahabaz Ali.
Babu Tripura Nanda Roy Choudhury.
Munshi Abdul Aziz.
Babu Ram Taran Chatterjee.
Babu Sambhunath Bannerjee.

Union No. VI—Kirtipur union board.

Munshi Tozammal Hossain.
Babu Ram Taran Roy.
Munshi Syed Abul Hossain.
Babu Anukul Chandra Kar.
Munshi Sariut Momin.
Munshi Satter Mian.

Union No. VII—Sadal union board.

Babu Kalipada Mukherjee.
Maulvi Abdul Jobber.
Munshi Shaikh Abu Hossain Sarkar.
Munshi Shaikh Siddique Hossain.
Munshi Satkowri Shaikh.
Babu Indra Mohan Bannerjee.

Union No. VIII—Margram union board.

Babu Sadananda Saha.
Munshi Sahadat Mandal.
Maulvi Syed Tofezzul Ali.
Babu Ganesh Chandra Das.
Babu Rash Behari Sinha.
Babu Paramananda Pramanick.

Union No. IX—Khargram union board.

Maulvi Mohammad Ali Newaj.
Maulvi Mir Yousuf Ali.
Babu Ahi Bhusan De.
Babu Bhupati Bhusan Chattoraj.
Babu Sarat Chandra Chakraverty.
Babu Hrishikesh Kaviraj.

Union No. X—Balia union board.

Babu Satish Chandra Bhattacherjee.
Babu Gopeswar Sinha.
Babu Abhoy Pada Roy.
Babu Amarendra Nath Ghose.
Babu Ananda Chandra Bannerjee.
Babu Moulindra Bhusan Bhattacherjee.

(*b*) Under sub-section (*3*) of section 6 of the Bengal Village Self-Government Act, 1919 (Bengal Act V of 1919), the following gentlemen have been appointed by the District Magistrate of Murshidabad to be members of the under-mentioned union boards in the police-stations noted above each group:—

Kandi police-station.

Union No. I—Kumarsanda union board.

Babu Ashutosh Dey.
Babu Kalachand Nath.
Babu Radhakanta Chakraverty.

Union No. II—Mahalandi union board.

Munshi Haji Shaikh Mehendi.
Munshi Shaikh Belat Mandal.
Babu Anadi Nath Bannerjee.

Union No. III—Gokarna union board.

Munshi Mohasen Shaikh.
Munshi Haji Shaikh Jeher.
Babu Aghorenath Roy Choudhury.

Union No. IV—Purundarpur union board.

Babu Hare Krishna Pal.
Munshi Shaikh Ommur Ali
Munshi Shaikh Garibulla Mandal.

Union No. V—Andulia union board.

Babu Bomkesh Gupta.
Maulvi Mohammad Zerat Hossain, B.A.
Babu Bhujanga Bhusan Roy.

Union No. VI—Jasohari-Anukha union board.

Babu Abhoypada Roy.
Babu Bibhuti Bhusan Mitra.
Munshi Shaikh Golam Rabbani.

Khargram police-station.

Union No. I—Padam-Kandi union board.

Babu Kedar Nath Mandal.
Babu Sajani Kanta Mandal.
Munshi Shaikh Jamiruddin Mandal.

Union No. II—Jhilli union board.

Shaikh Joynal Hossain Mandal.
Babu Harish Chandra Sinha.
Babu Rakhal Raj Roy.

Union No. III—Indrani union board.

Babu Upendra Narayan Baral.
Babu Bannyeswar Ghose.
Babu Prafulla Jiban Chatterjee.

Union No. IV—Parulia union board.

Maulvi Mohammad Abul Kasem.
Babu Girindra Mohan Sinha.
Babu Bhupendra Narayan Pramanik.

Union No. V—Eroali union board.

Babu Sashi Bhusan Acharya.
Babu Kalipada Bhattacherya.
Babu Kartick Chandra Rai Choudhury.

Union No. VI—Kirtipur union board.

Babu Indradumnya Sinha.
Munshi Mohammad Tenu.
Babu Indra Narayan Ghosh.

Union No. VII—Sadal union board.

Babu Narendra Narayan Mukherjee.
Babu Dwijapada Chatterjee.
Babu Madhusudan Ghosh.

Union No. VIII—Margram union board.

Babu Indra Mohan Bannerjee.
Munshi Haji Emarat Mandal.
Babu Debendra Nath Mandal.

Union No. IX—Khargram union board.

Babu Satish Chandra Bannerjee.
Munshi Mohammad Tinkowri.
Babu Indra Bhusan Roy.

Union No. X—Balia union board.

Babu Naresh Chandra Bannerjee, B.L.
Babu Radhaballav Mandal.
Munshi Jobed Shaikh.

Barwan police-station.

Union No. I—Kallyanpur union board.

Babu Upendra Chandra Das.
Babu Bonbehari Choudhury.
Babu Panchanan Chatterjee.

Union No. II—Kuli union board.

Babu Sakhi Gopal Pal.
Shaikh Ismail.
Munshi Mohiuddin.

Union No. III—Sabaldah union board.

Munshi Abdus Samad.
Munshi Mohammad Ishaque.
Munshi Abdul Gani.

Union No. IV—Biprasekhar union board.

Munshi Abdur Rahman Choudhury.
Munshi Sultan Shaikh.
Babu Aghore Nath Chakraverty.

Union No. V—Barwan union board.

Munshi Jesumuddin.
Munshi Abdul Bari.
Babu Bishnu Pada Ghose.

Union No. VI—Sehora union board.

Munshi Shaikh Nurulla.
Babu Hare Krishna Ghosal.
Babu Radha Govinda Roy.

Union No. VII—Kurunnarun union board.

Munshi Shaikh Aulad Hossain.
Babu Gangadhar Gupta.
Babu Abhoypada Ganguly.

Union No. VIII—Sundarpur union board.

Babu Kishori Mohan Ganguly.
Munshi Imdad Hossain.
Munshi Kazi Abdur Rashid.

Union No. IX—Panchthupi union board.

Babu Bimalapada Ghosh Hazra.
Munshi Jonab Ali Shaikh.
Mohammad Sumser Ali.

Bharatpur police-station.

Union No. I—Jajan union board.

Babu Aghore Nath Mukherjee.
Munshi Abdur Rahman.
Babu Dhirendra Nath Ghose.

Union No. II—Alugram union board.

Babu Anadi Bhusan Roy.
Munshi Bhola Shaikh.
Munshi Kumarjan Shaikh.

Union No. III—Amlai union board.

Biswanath Bhattacheryya *alias* Bijoy Bhusan Bhattacheryya.
Babu Purna Chandra Nandi.
Munshi Wajuddin Ahmad.

Union No. IV—Sijgram union board.

Maulvi Syed Abu Mohammad Fuzle Rahim.
Babu Satish Chandra Ghose.
Babu Dakshina Ranjan Ghose.

Union No. V—Bharatpur union board.

Babu Baidya Nath Chatterjee.
Munshi Mohammad Abu Taher.
Maulvi Shah Mohammad Abul Hares.

Union No. VI—Talgram union board.

Maulvi Khondkar Habibur Rahman.
Babu Asit Mohan Sinha.
Babu Satyahari Ghosh.

Union No. VII—Godda union board.

Babu Dhirendra Kumar Chatterjee.
Munshi Choudhury Mohammad Abdul Hamid.
Munshi Abdul Makid.

Union No. VIII—Malihati union board.

Babu Nalinakhya Mukherjee.
Munshi Abu Taher.
Munshi Abdur Rahim.

Union No. IX—Baidyapur union board.

Babu Abhoypada Trivedi.
Babu Murari Pada Sen Gupta.
Munshi Mohammad Rahimuddin.

Union No. X—Simulia-Banwaribad union board.

Babu Bhupendra Nath Mukherjee.
Mohammad Matesum Ali.
Babu Oramba Pada Pal.

Union No. XI—Salar union board.

Maulvi Choudhury Mohammad Mazharal Haque.
Shah Mohammad Khaliluddin Hyder Abu Zober.
Babu Dwijapada Sarkar.

Union No. XII—Kagram-Talibpur union board.

Munshi Nuruzzaman.
Babu Mani Bhusan Chatterjee.
Babu Sib Chandra Das Banik.

O. M. REES, *District Magistrate.*

Orders by the Deputy Inspector-General of Police, Intelligence Branch.

Calcutta.—No. 353.—22nd February 1935.—Sub-Inspector Santosh Lal Chatarji is appointed to act as Inspector with effect from 18-2-1935, a.m., on return from leave to fill a temporary appointment sanctioned in Government order No. 198Pl.S., dated the 7th April 1934.

C. E. S. FAIRWEATHER,
Deputy Inspector-General of Police (offg.).

Rajshahi Division—Jalpaiguri.

No. 696M.—26th February 1935.—It is notified for general information that at the by-election held on the 11th February 1935, Maulvi Azizul Islam has been duly elected a Commissioner for Ward No. III of the Rangpur Municipality, *vice* Maulvi Basar Muhammad, deceased.

No. 103P.W.—1st March 1935.—It is hereby notified for general information that in exercise of the power delegated to me by Bengal Government notification No. 3403-L.S.-G., dated the 1st December 1904, I order the establishment, under section 6 (*c*) of the Bengal Ferries Act, I of 1885, of the under-noted ferry in the district of Rangpur:—

Mustafa ferry—locally known as Kadamtali Ferry BII—over the river Sati Teesta on the village track from Paglahat to Mustafahat in continuation of Khalaighat approach of local board road No. 84 in police-station Lalmonirhat in the Kurigram subdivision.

2. In exercise of the powers delegated to me by the Bengal Government notification No. 217L.S.-G., dated the 12th January 1905, I also direct, under section 35 of the same Act, that the said ferry shall be managed by the district board of Rangpur and that all the proceeds of the said ferry and all the fines levied and the compensation received under the same Act in respect thereof shall be paid into the district fund with effect from the date of this notification.

F. W. ROBERTSON, *Commissioner.*

Orders by the Deputy Inspector-General of Police, Rajshahi Range.

Jalpaiguri.—No. 1689.—1st March 1935.—Maulvi Shah Abdur Rahman, Inspector, Bogra, is granted 1 month's privilege leave, under article 260, Civil Service Regulations (New Leave Rules), in extension of the leave already granted to him.

The existing acting arrangement will continue.

F. P. WALKER,
Deputy Inspector-General of Police.

Registered No. C207

The Calcutta Gazette

THURSDAY, MARCH 7, 1935.

PART IA

Orders and Notifications by the Government of India republished for general information.

LEGISLATIVE DEPARTMENT.

NOTIFICATION.

New Delhi, the 18th February 1935.

No. F.-438-II/34-C. & G.—Whereas the election of Dr. Pramatha Nath Banerjea by the Calcutta Suburbs (Non-Muhammadan Urban) constituency as a member of the Legislative Assembly has been called in question by an election petition duly presented under the provisions of Part VII of the Legislative Assembly Electoral Rules by Mr. Tulsi Charan Goswami, the Governor General is pleased, in pursuance of the provisions of rules 36(2) and 38 of the said rules, to appoint—

1. Mr. K. C. Nag, M.B.E., Bar.-at-Law, Additional District and Sessions Judge, Alipore,
2. Mr. Pashupati Basu, Retired District and Sessions Judge, and
3. Rai Khagendra Nath Datta Bahadur, Retired District and Sessions Judge,

as Commissioners for the trial of the said petition and further to appoint Mr. K. C. Nag, M.B.E., Bar.-at-Law, to be the President of the Commission so constituted, and Alipore, Calcutta, as the place where the trial of the petition shall be held.

L. GRAHAM,

Secy. to the Govt. of India.

FOREIGN AND POLITICAL DEPARTMENT.

NOTIFICATIONS.

New Delhi, the 19th February 1935.

No. 122-X.—The following Declaration by His Majesty the King in Council, dated the 14th May 1934, is published for general information:—

AT THE COURT AT BUCKINGHAM PALACE.

The 14th day of May, 1934.

PRESENT:

THE KING'S MOST EXCELLENT MAJESTY.

LORD PRESIDENT.

SECRETARY SIR PHILIP CUNLIFFE-LISTER.

MR. ORMSBY-GORE.

SIR PHILIP SASSOON.

SIR ROBERT CLIVE.

WHEREAS by the Indian (Foreign Jurisdiction) Order in Council, 1902, the limits of that Order may be extended to such territories outside India as may be declared by His Majesty

in Council to be territories in which jurisdiction is exercised by or on behalf of His Majesty through the Governor-General of India in Council or some authority subordinate to him:

AND WHEREAS by treaty grant usage sufferance and other lawful means His Majesty has jurisdiction over certain persons at the trade marts of Yatung, Gyantse and Gartok in Tibet and on the routes to the said trade marts:

Now, THEREFORE, His Majesty is pleased, by and with the advice of His Privy Council, to declare that Tibet is a territory in which the jurisdiction so provided over certain persons at the said trade marts and on the said routes is exercised by or on behalf of His Majesty through the Governor-General of India in Council or some authority subordinate to him.

M. P. A. HANKEY.

No. 123-X.—In exercise of the powers conferred by the Indian (Foreign Jurisdiction) Order in Council, 1902, as applicable to Tibet by virtue of the declaration of His Majesty in Council published with the Notification of the Government of India in the Foreign and Political Department, No. 122-X, dated the 19th February 1935, the Governor-General in Council is pleased to provide as follows for the administration of justice in respect of offences committed by and disputes arising between British subjects at the trade marts of Gyantse and Yatung or on the routes thereto:—

PART I.—*Criminal jurisdiction.*

For the purposes of criminal jurisdiction the following provisions shall apply, namely:—

1. The British Trade Agents at Gyantse and Yatung shall exercise the powers of a District Magistrate as described in the Code of Criminal Procedure, 1898 (Act V of 1898), and the Political Officer in Sikkim shall exercise the powers of a Court of Session as described in the said Code.

2. A person convicted by the British Trade Agent at Gyantse or Yatung in exercise of the powers hereby conferred may appeal to the Political Officer, Sikkim, and a person convicted by the said Political Officer in exercise of the powers hereby conferred may appeal to the High Court of Judicature at Fort William in Bengal:

Provided that no appeal shall lie if the sentence passed would not have been appealable under the law for the time being in force in British India in the case of a conviction by the British Trade Agent at Gyantse or Yatung to the Court of Session, or in the case of a conviction by the Political Officer in Sikkim to the High Court.

3. For the purposes of the powers hereinbefore conferred the law relating to offences and to criminal procedure for the time being in force in British India shall be applicable so far as may be:

Provided that the powers conferred by sections 401 and 402 of the Code of Criminal Procedure, 1898 (Act V of 1898) shall be exercisable only by the Governor-General in Council;

Provided further that sections 443 to 447 of the said Code shall not be applicable.

PART II.—*Civil Procedure.*

For the purposes of civil jurisdiction the following arrangements shall be made, namely:—

1. The Code of Civil Procedure, 1908 (Act V of 1908), shall apply in so far as the same may be applicable subject to the provisions of this Notification and to any amendments to which the said Code is for the time being subject in British India.

2. The British Trade Agents at Gyantse and Yatung shall be Munsifs with jurisdiction to try all original suits of which the value does not exceed Rs. 5,000, and the Political Officer in Sikkim shall exercise the powers of a District Court as described in the said Code of Civil Procedure.

3. An appeal from any decree or order of either of the said British Trade Agents shall lie to the Political Officer in Sikkim, and an appeal from any decree or order of the said Political Officer shall subject to the provisions of the said Code of Civil Procedure lie to the High Court of Judicature at Fort William in Bengal.

H. A. F. METCALFE,

Foreign Secy. to the Govt. of India.

The 19th February 1935.

No. 125-I. B.—In pursuance of the First Schedule to the Indian Extradition Act, 1903 (XV of 1903), the Governor-General in Council is pleased to direct that the following further amendment shall be made in the Notification of the Government of India in the Foreign and Political Department, No. 249-I., dated the 10th May 1933, declaring certain units of the Indian States Forces to be units desertion from which is an extradition offence, namely:—

Under the heading "Hyderabad", after the entry "Hyderabad 3rd Golconda Lancers", the following entry shall be inserted, namely:—

" "A" Battery Nizam's Horse Artillery".

B. J. GLANCY,

Political Secy. to the Govt. of India.

INDIAN AUDIT DEPARTMENT.

NOTIFICATION.

LEAVE AND APPOINTMENTS.

New Delhi, the 20th February 1935.

No. 516-G. B. E./217-34.—The following events in the Indian Audit Department are notified:—

With effect from the 30th November 1934.

Mr. J. C. Nixon, C.I.E., I.C.S., is confirmed in class I of Accountants General.

Mr. B. M. Staig, I.C.S., is confirmed in class II of Accountants General.

E. BURDON,

Auditor General in India.

DEPARTMENT OF INDUSTRIES AND LABOUR.

NOTIFICATION.

FACTORIES.

New Delhi, the 19th February 1935.

No. L.-3050.—In exercise of the powers conferred by sub-section (*4*) of section 33 of the Factories Act, 1934 (XXV of 1934), the Governor-General in Council is pleased to make the following rules, the same having been previously published as required by section 79 of the said Act, namely:—

Rules.

1. These rules may be called the Hazardous Occupations (Lead) Rules, 1935.

2. The operations specified in the Schedule and every other operation involving the use of lead compounds are declared to be hazardous operations when carried on in any factory.

3. In these rules "lead compound" means any compound of lead, other than galena, or any mixture which contains a compound of lead, other than galena, and which, when treated in the manner prescribed in rule 4, yields to an aqueous solution of hydrochloric acid a quantity of soluble lead compound exceeding, when calculated as lead monoxide, five per cent. of the dry weight of the portion taken for analysis. In the case of paints and similar products and other mixtures containing oil or fat the "dry weight" means the dry weight of the material remaining after extraction with solvents as prescribed in rule 4.

4. The manner of treatment referred to in rule 3 shall be as follows:—

A weighed quantity of the material which has been dried at 100°C and thoroughly mixed shall be continuously shaken for one hour, at the common temperature, with 1000 times its weight of an aqueous solution of hydrochloric acid containing 0·25 per cent. by weight of hdyrogen chloride. This solution shall thereafter be allowed to stand for one hour and then filtered. The lead salt contained in the clear filtrate shall then be precipitated as lead sulphide and weighed as lead sulphate. Paints and similar products and other mixtures containing oil or fat shall before treatment in the manner described be thoroughly mixed and treated with suitable solvents to remove oil, fat, varnish or other media.

5. No woman, adolescent or child shall be employed in any factory in any of the operations specified in the Schedule or, save in accordance with the provisions hereinafter contained, in any other operation involving the use of lead compounds.

6. In respect of every woman, adolescent or child employed in a factory in any operation involving the use of a lead compound (hereinafter referred to as "such person") the manager of the factory shall have in his possession a special certificate of fitness issued in Form A by a certifying surgeon appointed under Section 12 of the Factories Act, 1934.

7. Every such person shall carry while he is at work a token giving a reference to such certificate.

8. Every such person shall be medically examined by a certifying surgeon at intervals of not more than three months, and a record of such examinations shall be kept in Form B.

9. If at any time the certifying surgeon is of opinion that any such person is no longer fit for employment in any operation involving the use of a lead compound, he shall cancel the certificate of fitness of that person and that person shall not be employed in any such operation unless the certifying surgeon again certifies him to be fit.

10. Where dust or fume from a lead compound is produced in any operation provision shall be made for drawing the fume or dust away from every such person by means of an efficient exhaust draught so contrived as to operate on the dust or fume as nearly as may be at its point of origin.

11. No food, drink or tobacco shall be brought into, or consumed in, any room in which any such person is employed.

12. Adequate protective clothing in a clean condition shall be provided by the employer for and worn by every such person.

13. Every room in which any such person is employed, and all tools and apparatus used by him, shall be kept in a clean condition.

Schedule.

1. Work at a furnace where the reduction or treatment of zinc or lead ores is carried on.

2. The manipulation, treatment, or reduction of ashes containing lead, the desilverising of lead or the melting of scrap lead or zinc:

3. The manufacture, or the use except solely in the solid state, of solder or alloys containing more than ten per cent. of lead:

4. The manufacture of any oxide, carbonate, sulphate, chromate, acetate, nitrate, or silicate of lead:

5. Mixing or pasting in connection with the manufacture or repair of electric accumulators:

6. The cleaning of work-rooms where any of the processes aforesaid are carried on.

FORM A.

SPECIAL CERTIFICATE OF FITNESS.

In respect of persons employed in operations involving the use of lead compounds.

Serial No.————————

Date————————

I HEREBY certify that I have personally examined (named)———— $\frac{\text{son}}{\text{daughter}}$ $\frac{}{\text{wife}}$ of————(caste, etc.)————residing at———— who is desirous of being employed as————in the———— Factory and that his/her age as nearly as can be ascertained from my examination is————years and that he/she is in my opinion fit for employment at work involving the use of lead compounds. His/her descriptive marks are————

Left thumb impression of person examined.

————————

Certifying Surgeon.

FORM B.

Register of Medical Inspection of persons employed in processes involving the use of lead compounds.

Serial No.	Certificate No.	Name.	Sex.	Age.	Date of employment.	Date of Inspection.	Main symptoms.							Remarks.	Initials of Certifying Surgeons.
							Blue line on gums.	Anæmia.	Gastric Colic constipation.	Nervous Symptom Vertigo headache.	Paralysis.	Encephalopathy.	Others.		
1	2	3	4	5	6	7	8	9	10	11	12	13	14	15	16
						1. 2. 3. 4.									
						1. 2. 3. 4.									
						1. 2. 3. 4.									
						1. 2. 3. 4.									

A. G. CLOW,
Joint Secy. to the Govt. of India.

Registered No. C207

The Calcutta Gazette

THURSDAY, MARCH 7, 1935.

PART IB

Educational Notices.

Burdwan Division.

CORRIGENDUM.

Chinsura, the 26th February 1935.

In the list of candidates who have been awarded Primary (Maktab) Final Scholarships in the examination held in this division in 1934, published under this office notification, dated the 12th January 1935, at pages 242-43, Part IB of the *Calcutta Gazette*, dated the 24th January 1935, *for*—

Howrah District.

No.	Name of scholar.	Name of school from which the candidate appeared.	Name of the school at which the scholarship is tenable.
1	Abdur Samad Halder ..	Baxera Chittaranjan Municipal Free Primary School.	Santragachi Kedarnath Institution (High) (Howrah);

Please read

Howrah District.

1	Abdus Samad Halder ..	Baxera Chittaranjan M. F. Primary School.	Howrah Zilla School.

A. RAHMAN KHAN,

for *Inspector of Schools, Burdwan Division.*

Board of Intermediate and Secondary Education, Dacca.

NOTIFICATION No. 1407.

Ramna, the 20th February 1935.

Examinations, 1935.

In supersession of this office notification No. 6975, dated the 22nd December 1934, as published in the *Calcutta Gazette*, dated the 17th January 1935, it is hereby notified for general information that the ensuing examinations to be conducted by the Board of Intermediate and Secondary Education, Dacca, will be held on the dates given below :—

Date.	Day.	Morning. (10 a.m. to 1 p.m.)	Afternoon. (2 p.m. to 5 p.m.)
High School Examination.			
25th March	Monday	English, first paper	English, second paper.
26th ,,	Tuesday	Mathematics (Compulsory)	Vernacular—Bengali and Urdu.
27th ,,	Wednesday	Geography	History.
28th ,,	Thursday	Mathematics (Additional) Hygiene. General Science. Classical languages :— Sanskrit, Arabic, Persian and Bengali Literature for girls.	....
High Madrasa Examination.			
25th March	Monday	English, first paper	English, second paper.
26th ,,	Tuesday	Mathematics (Additional)	Vernacular—Bengali and Urdu.
27th ,,	Wednesday	Fiqh, Faraiz and Aqaid	General History, Islamic History.
28th ,,	Thursday	Mathematics (Compulsory)	....
30th ,,	Saturday	Arabic, first paper	Arabic, second paper.
Intermediate Examination in Group "A" (Arts).			
25th March	Monday	English	Vernacular—Bengali, Urdu, Assamese, Alternative Paper in English.
26th ,,	Tuesday	English Literature, first paper	English Literature, second paper.
27th ,,	Wednesday	Mathematics, first paper Child Psychology, first paper	Mathematics, second paper. Child Psychology, second paper.
28th ,,	Thursday	Classical languages :— Sanskrit, Arabic, Persian and Bengali Literature for women candidates, first paper.	Classical languages :— Sanskrit, Arabic, Persian and Bengali Literature for women candidates, second paper.
30th ,,	Saturday	Economics, first paper	Economics, second paper.
1st April	Monday	History, first paper	History, second paper.
2nd ,,	Tuesday	Logic, first paper Geography, first paper	Logic, second paper. Geography, second paper.
Intermediate Examination in Group "B" (Science).			
25th March	Monday	English	Vernacular—Bengali and Urdu.
27th ,,	Wednesday	Mathematics, first paper	Mathematics, second paper.
28th ,,	Thursday	Physics, first paper	Physics, second paper.
30th ,,	Saturday	Chemistry, first paper	Chemistry, second paper.
1st April	Monday	Botany, first paper	Botany, second paper.
2nd ,,	Tuesday	Geography, first paper	Geography, second paper.
Intermediate Examination in Group "C" (Islamic Studies).			
25th March	Monday	English	Vernacular—Bengali and Urdu.
26th ,,	Tuesday	English Literature, first paper Kalam and Arabic Logic, first paper Islamic History, first paper	English Literature, second paper. Kalam and Arabic Logic, second paper. Islamic History, second paper.
27th ,,	Wednesday	Arabic, first paper	Arabic, second paper.
28th ,,	Thursday	Fiqh and Usul, first paper	Fiqh and Usul, second paper.
30th ,,	Saturday	Quran and Hadis, first paper	Quran and Hadis, second paper.
1st April	Monday	History, first paper	History, second paper.
Intermediate Examination in Group "D" (Dyeing).			
25th March	Monday	English	Vernacular—Bengali.
26th ,,	Tuesday	Principles of Dyeing	....
27th ,,	Wednesday	Mathematics, first paper	Mathematics, second paper.
28th ,,	Thursday	Physics, first paper	Physics, second paper.
30th ,,	Saturday	Chemistry, first paper	Chemistry, second paper.
1st April	Monday	Practical Dyeing (from 11 a.m.)	....
Intermediate Examination in Group "E" (Commerce).			
25th March	Monday	English	Vernacular—Bengali, Assamese, Alternative Paper in English.
26th ,,	Tuesday	Methods of Business and Commercial Correspondence, first paper.	Methods of Business and Commercial Correspondence, second paper.
28th ,,	Thursday	Shorthand (from 11 a.m.) Commercial Arithmetic Commercial History	Book-keeping and Simple Accountancy. ....
30th ,,	Saturday	Economics, first paper	Economics, second paper.
2nd April	Tuesday	Geography, first paper	Geography, second paper.

No examination will be held on Friday (the 29th March 1935) and Sunday (the 31st March 1935).

The centres for the High Madrasa Examination will be Dacca, Chittagong, Chinsura, Serajganj, Mymensingh, Comilla, Rajshahi and Noakhali and the centres for the Intermediate Examination in Group "C" will be Dacca, Chittagong and Serajganj. All other examinations will be held only at Dacca.

The dates for the Oral Test in English for the Intermediate Examination (all groups) will be notified later.

A. KHALIQ, *Secretary.*

Presidency Division.

40-1-A, Free School Street, Calcutta, the 25th January 1935.

Results of the Final Examinations of the Guru Training and Muallim Training Schools held in December 1934.

Jessore district.

Jessore Guru Training School.

1 Md. Jeher Ali Biswas.
2 Md. Mutaleb.
3 Md. Abdul Khaleque Khan.
4 Subid Ahmad Dhabak.
5 Md. Meher Ali.
6 Lakshminarayan Chakraverty.
7 Md. Umeduddin.
8 Md. Abdur Rahim.
9 Md. Hedayet Ali.
10 Haripada Chakraverty.
11 Narendra Nath Ghosh.
12 Mahbubul Huq.
13 Bepin Behari Chakraverty.
14 Hiralall Banerjee.
15 Satish Chandra Ray.
16 Amulya Ratan Halder.
17 Kanta Kumar Sarder.
18 Surendra Nath Biswas.
19 Bejoy Krishna Dhar.
20 Munshi Md. Motharuddin.
21 Prafulla Kumar Mallik.
22 Md. Abdus Salam.
23 Narendra Nath Pramanik.
24 Bimal Chandra Majumder.
25 Md. Abdul Hakim.
26 Md. Ramjan Ali Biswas.
27 Mansur Ahmad.
28 Benode Behari Mallik.
29 Md. Sharitullah.
30 Md. Ghulam Jabbar.
31 Jogendra Nath Biswas.
32 Raj Kumar Mondal.
33 Abdul Bari.
34 Muhammad Ali Dafader.
35 Kalipada Ray.
36 Surendra Nath Mallik.
37 Bimal Krishna Biswas.
38 Muhammad Ali Baksh.

Mohanpur Guru Training School.

39 Panchanan Bose.
40 Md. Abdul Motleb.
41 Md. Ahmad Ali.
42 Md. Abdul Majid Molla.
43 Benod Behari Mallik.
44 Sheikh Abdul Wahed.
45 Mohendra Nath Biswas.
46 Mani Lall Banerjee.
47 Ananta Kumar Sarker.
48 Nagendra Nath Mondal.

Magura Guru Training School.

49 Rebati Mohan Das.
50 Abdul Hadeque Molla.
51 Jitendra Nath Mitra.
52 Mahtabuddin Mian.
53 Ghulam Quddus Molla.
54 Satish Chandra Biswas.
55 Dhirendra Nath Majumder.
56 Aftabuddin Molla.
57 Krishna Ranjan Bose.
58 Md. Nurul Anwar.
59 Tarani Kanta Biswas.
60 Abdul Wahed Sikder.
61 Krishna Pada Ray.
62 Daliluddin Biswas.
63 Patit Paban Singh.

Umedpur Guru Training School.

64 Mirja Md. Abul Husain.
65 Md. Neyamat Ali.
66 Jitendra Nath Sen Gupta.
67 Md. Liakat Husain.
68 Nagendra Nath Biswas.
69 Ram Sankar Sarma.
70 Md. Khelafat Husain.
71 Bibhuti Bhushan Mukerjee.
72 Siva Pada Sarker.
73 Md. Makbul Ahmad.
74 Md. Abdul Ghani.
75 Md. Rahimuddin.

Rupganj Guru Training School.

76 Amaresh Chandra Ray.
77 Jitendra Nath Chakraverty.
78 Md. Abdul Hamid.
79 Ashutosh Ghosh.
80 Bahramuddin Biswas.
81 Rangalall Das.
82 Md. Abdul Wadud.
83 Jogendra Nath Adhikery.
84 Jnanendra Das.
85 Md. Abdul Ghani.

Ghatbaor Guru Training School.

86 Kartik Chandra Adhikery.
87 Panchu Gopal Ghosh.
88 Bimal Chandra Banerjee.
89 Probodh Kumar Biswas.
90 Jagadish Chandra Biswas.
91 Kazi Abdul Mabud.
92 Md. Abdul Majid.
93 Sachi Dulal Datta.
94 Md. Raihan.
95 Kamaluddin Ahmad.
96 Daliluddin Molla.

Private candidates.

97 Haripada Mitra.
98 Md. Abdul Aziz.
99 Md. Naimuddin.
100 Abdul Wadud.
101 Panchanan Sarker.

Noapara Muallim Training School.

1 Syed Afzal Ali.
2 Md. Sadaruddin.
3 Md. Nurul Islam.
4 Khundker Mahiuddin.
5 Md. Shamsul Huq Choudhury.
6 Md. Abdus Samad.
7 Md. Tajimuddin.
8 Md. Mofazzel Husain
9 Md. Abdul Gaffar.
10 Atiar Rahman Biswas.
11 Abdul Hadi.

J. M. SEN, *Inspector of Schools.*

Presidency Division.

NOTIFICATION.

Calcutta, the 23rd February 1935.

Private candidates who have been sent up for the Matriculation Examination of 1935 by the Inspector of Schools, Presidency Division, are hereby informed that the admit cards will not be sent to them by post as already published in his notification of July 1934. But the candidates will have to call at his office to take delivery of their admit cards. They should bring with them the fee receipts granted to them by the Calcutta University. As to the dates, they should consult notices on the notice board.

AFTABUDDIN AHMED, for *Inspector of Schools.*

State Medical Faculty of Bengal.

NOTICE.

Grosvenor House, Calcutta, the 2nd March 1935.

No. 470F.—The written part of the ensuing Primary, Intermediate and Final Licentiateship Examinations of the Faculty will be held on the days and in the order indicated below. The examinations for candidates from the Dacca Medical School, the Lytton Medical School, Mymensingh, and the Chittagong Medical School will be held at Dacca and the examinations for other candidates in Calcutta at the Senate Hall, Calcutta University:—

	From 10-30 a.m. to 1-30 p.m	From 12 noon to 3 p.m.	From 2-30 p.m. to 5-30 p.m.
Intermediate Examination.			
1935.			
Wednesday, 24th April.	Physiology	....	Materia Medica.
Thursday, 25th April.	....	Anatomy.	
Final Examination.			
Friday, 26th April.	Medicine	....	Medical Jurisprudence and Hygiene.
Saturday, 27th April	Surgery	....	Midwifery.
Primary Examination.			
Monday, 29th April.	....	Chemistry and Physics.	

The time and place for holding the oral and practical examinations in each subject will be announced later.

Applications and fees for admission to the above examinations will be received in this office up to 23rd March 1935.

R. M. DAS, *Secretary.*

Calcutta University.

NOTICE.

Senate House, the 25th February 1935.

The undermentioned candidate has been awarded the Onauthnauth Deb Research Prize in Law for the year 1935. The subject of his thesis is stated below:—

Hemendranarayan Bhattacharyya, M.A., M.L.

Subject of thesis.

Adjective Law or the Law of Procedure in Ancient India.

B. B. DUTT,

Controller of Examinations (offg.).

Calcutta University.

NOTICE.

Senate House, the 24th February 1935.

The next D.P.H. Examination, Parts I and II, will commence on Thursday, the 9th, and Wednesday, the 22nd May 1935, respectively. Monday, the 8th April 1935, has been fixed as the last date for submission of applications and fees for admission to the examinations.

B. B. DUTT,

Controller of Examinations (offg.).

Education Department, Bengal.

NOTIFICATION.

Calcutta, the 25th February 1935.

Babu Brajamohan Dutt's Prize for Indian Ladies for the year 1934-35.

The following subject has been selected for "Babu Brajamohan Dutt's Prize" of Rs. 45 for the year 1934-35:—

Co-education in (*a*) Primary Schools; (*b*) Secondary Schools; (*c*) University.

The conditions for the award of the prize are—

(1) That the competition be open to all educated women, being natives of Bengal, without regard to age.

(2) That the prize of Rs. 45 be given for an essay to be written either in Bengali or Sanskrit.

(3) That the essays be sent to the Provincial Text-book Committee for adjudication within six months of the date of advertisement.

(4) That each essay be accompanied by a written declaration from the husband, parent or guardian of the competitor that, to the best of his belief, she has received no assistance of any kind, direct or indirect, in writing the essay.

Candidates are requested to send their essays to the Secretary to the Provincial Text-book Committee, Writers' Buildings, Block No. 5, Room No. 1, Calcutta. The envelope containing the essay should be superscribed "Brajamohan Dutt's Prize Essay." The name of the successful competitor will be published in the *Calcutta Gazette*.

A lady who wins the prize in any year is not debarred from subsequent competition, and if the essay submitted by a competitor who has been previously successful is adjudged to be the best, the name of such a competitor will be published in the Gazette as the winner of the competition. The actual prize will, however, in these circumstances, be awarded to the competitor whose essay is adjudged to stand next in order of merit, provided that her essay comes up to the standard required by the next clause.

If none of the essays comes up to a standard which is, in the opinion of the Examiners, adequate, no prize will be awarded.

J. M. BOTTOMLEY,

Director of Public Instruction, Bengal.

Registered No. C207

The Calcutta Gazette

THURSDAY MARCH 7, 1935.

PART II

Advertisements.

Notices.

Advertisements, Notices, etc., intended for insertion in this part of the Gazette cannot be received after noon on Saturday. All manuscripts and postal remittances must be addressed to Superintendent, Government Printing, Bengal Government Press, Alipore. For the convenience, however, of parties or firms located in Calcutta cash payments of Advertisement charges may be made at Publication Sales Office, Room No. 2, Ground Floor, Writers' Buildings, Calcutta.

Land Sale Notices.

Notification A.

NOTICE is hereby given, under sections 6 and 13, Act XI of 1859, that the undermentioned estates and shares of estates in the district of Howrah will be put up for sale at the office of the Collector of that district on 26th March 1935, at 12 noon, for arrears of revenue and other demands which by law are realisable as arrears of land revenue.

When in columns 5, 7 and 9 of the following statement it is stated that only a share is to be sold, it is to be understood that a separate account is kept for that share :—

Tauzi No.	Name of mahal and pargana.	Sadar jama of whole estate.	Whether the whole estate is to be sold.	If only a share is to be sold, specification of such share or shares.	Names of proprietors of property to be sold.	If only a share is to be sold, the sadar jama of such share.	If the whole estate is to be sold, the arrears due from it.	If only a share is to be sold, the arrears due from it.
1	2	3	4	5	6	7	8	9
		Rs. a. p.				Rs. a. p.		Rs. a. p.
1/9	Basantapur, pargana Bhursit.	11,065 7 0	..	1a. 16gds.* ..	Manohar Lal Seal	1,244 14 4	..	465 3 11
4/Rs.	Mandalghat, pargana Mandalghat.	2,23,106 11 6	..	12 gandas* ..	Raja Janaki Nath Ray Bahadur and others.	8,420 4 3	..	2,147 5 0
4/7	Ditto ..	2,23,106 11 6	..	2as. 11gds. 3kg. 4tils.	Manohar Lal Seal	35,674 10 3	..	17,104 10 3
4/8	Ditto ..	2,23,106 11 6	..	12 gds. 3 c. 16 tils*	Sm. Nikunja Monjuri Dassi.	8,929 9 6	..	4,122 2 7
4/12	Ditto ..	2,23,106 11 6	..	10 gandas* ..	Sailajanath Ray Choudhury and others.	6,972 13 2	..	19,754 12 0
4/13	Ditto ..	2,23,106 11 6	..	10 gandas* ..	Shamananda Banerjee, manager of the estate of Jotindra Nath Ray Choudhury, and others.	6,972 13 2	..	9,385 8 10
4/15	Ditto ..	2,23,106 11 6	..	1a. 10gds. 2c. 3kg. 10½ tils.*	Panchanan Mallick	21,405 7 9	..	5,980 9 4
4/17	Ditto ..	2,23,106 11 6	..	1a. 10gds. 2c. 3kg. 10½tils.	Giri Mohan Mallick	21,405 7 8	..	7,060 9 2
4/18	Ditto ..	2,23,106 11 6	..	1a. 10gds. 2c. 3kg. 10½ tils.*	Gour Mohan Mallick.	21,405 7 9	..	6,452 4 9

*All other shares will be excluded from the sale.

This estate is being advertised for sale for instalments of revenue which was due on or before the 30th Agrahyan 1341 B.S., and arrears of previous kists, of which the latest date of payment was 12th January 1935.

Howrah, the 22nd February 1935.

B. K. GHOSH, *for* Collector.

Notification A.

NOTICE is hereby given under sections 6 and 13 of Act XI of 1859 that the under-mentioned estates and shares of estates in the district of Jessore will be put up to sale at the office of the Collector of that district on the 25th day of March 1935 at 12 noon for arrears of revenue (and other demands which by law are realizable as arrears of land revenue).

These estates are being advertised for sale for instalments of revenue which were due on or before the 30th of Agrahayan, 1341B.S., of which the latest day of payment was the 12th January 1935.

When in columns 5, 7 and 9 of the following statement it is stated that only a share is to be sold, it is to be understood that a separate account is kept for that share :—

Tauzi number.	Name of mahal and pargana.	Sadar jama of whole estate.	Whether the whole estate is to be sold.	If only a share is to be sold, specification of such share.	Names of proprietors of property to be sold.	If only a share is to be sold, the sadar jama of such estate.	If the whole estate is to be sold, the arrears due from it.	If only a share is to be sold, the arrears due from it.
1	2	3	4	5	6	7	8	9
		Rs. a. p.				Rs. a. p.	Rs. a. p.	Rs. a. p.
2	Kharija taluk Arua Kandi, pargana Mahmudshahi.	584 12 10	Whole	....	Nuruddin Ahmad Biswas and others.	..	200 6 10	..
66	Kharija taluk Taraf Dudsar, pargana Mahmudshahi.	2,649 0 5½	Share No. 3.	4 annas only. All other shares except that specified will be excluded from sale.	Mohen Bala Dasi ..	662 4 2	..	37 15 1
71	Zamindari Ishofpur Amirabad, pargana Isofpur Amirabad.	14,993 10 9	Whole	..	Babu Dhirendra Nath Rai, surviving executor to the estate of late Jogendra Nath Rai.	..	20,810 5 1	..
74	Zamindari Emadpur, pargana Emadpur.	4,188 15 1½	Do. ..	..	Saraju Bala Sarkar and others.	..	789 12 5½	..
125	Kharija taluk Joradah, pargana Mallikpur.	5,895 0 1	Share No. 1.	17 gandas 2 karas 2 crantis 7 tils. All other shares except that specified will be excluded from sale.	Hemangini Debya, jointly with Hemangini Debya, executrix to the estate of her late husband Keshab Chandra Deb Roy, mother guardian of Jnanendra Nath Deb Roy and another. A. P. Babu H. C. Bose for Sasanka Sekhar Majumder.	330 11 4	..	71 11 3
125	Ditto ..	5,895 0 1	Share No. 2.	4 annas 9 gandas 1 kara 1 cranti 10 tils. All other shares except that specified will be excluded from sale.	Rashamoyee Shaha and others.	1,641 1 4	..	335 6 7
125	Ditto ..	5,895 0 1	Share No. 5.	4 annas 5 gandas 13 tils only. All other shares except that specified will be excluded from sale.	Girija Bhusan Deb Roy.	1,567 6 9	..	370 3 6
228	Kharija taluk Panami, pargana Mahammadshahi.	1,520 1 2	Whole	..	Mr. S. N. Mukherjee, official liquidator to Karatipara Majumdar Estate, Ltd.	..	395 5 11	..
247	Kharija taluk Rakra Taraf, pargana Mahmudshahi.	4,847 8 5	Share No. 0.	8 annas only. All other shares except that specified will be excluded from sale.	Profulla Chandra Ghosh Chaudhuri and others.	2,423 12 2	..	785 0 0
257	Kharija taluk Shyamnagar, pargana Isofpur.	526 9 0	Whole	..	Nava Krishna Roy	..	145 15 0	..
261	Kharija taluk Saganna, pargana Mahmudshahi.	1,596 8 9	Share No. 0.	11 annas only .. All other shares except that specified will be excluded from sale.	Nagendra Narayan Roy.	1,097 10 0	..	330 10 4
261	Ditto ..	1,596 8 9	Share No. 1.	5 annas only All other shares except that specified will be excluded from sale.	Nityapada Pandey, A. P. Phani Bhusan Nandi.	498 14 9	..	150 4 8
274	Zamindari Sreepadguha, pargana Sreepadguha.	2,816 5 8	Share No. 2.	3 annas only .. All other shares except that specified will be excluded from sale	Protiva Sundari Debi	528 1 0	..	304 15 1

Tauzi number.	Name of mahal and pargana.	Sadar jama of whole estate.	Whether the whole estate is to be sold.	If only a share is to be sold, specification of such share.	Names of proprietors of property to be sold.	If only a share is to be sold, the sadar jama of such estate.	If the whole estate is to be sold, the arrears due from it.	If only a share is to be sold, the arrears due from it.
1	2	3	4	5	6	7	8	9
		Rs. a. p.				Rs. a. p.	Rs. a. p.	Rs. a. p.
4819	Zamindari Dihi Banaharia, pargana Mulghar.	3,508 8 11	Share No. 2.	5 annas only .. All other shares except that specified will be excluded from sale.	Sailaja Nath Rai Chaudhuri and others. A. P. Hemendra Nath Roy Chaudhury and another.	1,096 6 9	..	319 5 11¼
4819	Ditto ..	3,508 8 11	Share No. 6	4 annas 4 gandas only. All other shares except that specified will be excluded from sale.	Protiva Sundari Debi	921 0 0	..	399 0 0
4993	Kharija taluk Ektarpur, pargana Sahauzial.	4,098 4 2	Share No. 0.	10 gandas 2 karas 2 crantis only. All other shares except that specified will be excluded from sale.	Umashashi Debi, mother and guardian of Ram Das Roy Chaudhuri.	136 9 9	..	52 3 5
4993	Ditto ..	4,098 4 2	Share No. 2.	8 annas only .. All other shares except that specified will be excluded from sale.	Joy Chandra Rai Chaudhuri, Sebait of Sree Sree Iswar Madan Gopal Jew Thakur.	2,049 2 1	..	782 6 9
4993	Ditto ..	4,098 4 2	Share No. 3.	1 anna 12 gandas .. All other shares except that specified will be excluded from sale.	Jogesh Chandra Banerji and others.	409 13 3	..	156 7 11
4993	Ditto ..	4,098 4 2	Share No. 4.	1 anna 12 gandas .. All other shares except hat specified will be excluded from sale.	Brindaban Ch. Roy Chaudhury.	409 13 3	..	156 8 3
5046	Kharija taluk Chakra Dihi, pargana Mahmudshahi.	655 10 10	Share No. 0.	13 annas 6 gandas 2 karas 2 crantis only. All other shares except that specified will be excluded from sale.	Sita Nath Majumdar. A. P. Abinash Ch. Nag.	546 6 4	..	190 1 1
5110	Kharija taluk Rampur Dihi, pargana Mulghar.	6,040 8 8	Share No. 1.	8 annas only .. All other shares except that specified will be excluded from sale.	Sibendra Nath Singha Roy.	3,020 4 4	..	882 7 11½
5417	Zamindari Dihi Ulashi, pargana Mulghar.	19,467 13 5	Do. ..	3 annas 15 gandas 1 cranti 16 tils only. All other shares except that specified will be excluded from sale.	Ashutosh Bhattacharji, executor to the Estate of Shibji and Narayanjee and others.	4,420 15 11	..	4,417 11 5
5417	Ditto ..	19,467 13 5	Share No. 2.	8 annas only .. All other shares except that specified will be excluded from sale.	Bhupendra Krishna Ghosh.	9,733 14 9	..	10,409 14 9
5417	Ditto ..	19,467 13 5	Share No. 5.	2 annas only .. All other shares except that specified will be excluded from sale.	Sarfaraj Ali Taraf-dar and others.	2,433 7 8	..	1,772 1 1
5448	Kharija taluk Dehi Rudrapur, pargana Mulghar.	5,233 10 8	Share No. 1.	8 annas only .. All other shares except that specified will be excluded from sale.	Sibendra Nath Singha Roy.	2,616 13 4	..	762 0 0

Jessore, the 15th February 1935.

S. CHATTERJEE, *for* Collector.

Notification A.

NOTICE is hereby given, under sections 6 and 13, Act XI of 1859, that the undermentioned estates and shares of estates in the district of Dacca, will be put up for sale at the office of the Collector of that district on the 26th March 1935, at 11 a.m., for arrears of revenue and other demands which by law are realizable as arrears of land revenue.

When in columns 5, 7 and 9 of the following statement it is stated that only a share is to be sold, it is to be understood that a separate account is kept for that share :—

Tauzi No.	Name of mahal and pargana.	Sadar jama of whole estate.	Whether the whole estate is to be sold.	If only a share is to be sold, specification of such share or shares.	Names of proprietors of property to be sold.	If only a share is to be sold, the sadar jama of such share.	If the whole estate is to be sold, the arrears due from it.	If only a share is to be sold, the arrears due from it.
1	2	3	4	5	6	7	8	9
		Rs. a. p.				Rs. a. p.	Rs. a. p.	Rs. a. p.
241	Zamindari Munshi Imamuddin Choudhury, pargana Rasulpur.	4,497 3 3	..	Residue share consisting of 16 annas share of Barisal land in Part I. 16 annas share of Faridpur and Tippera land in Part II. 16 annas share of Dacca land except 8 annas share of mauzas Mahakali and Nairpukur, etc., in Part III. 16 annas share of Mymensingh land in Part IV. All other shares than that specified above will be excluded from sale, viz., separate account Nos. 1 and 2 consisting of 8 annas share of mauzas Mahakali and Nairpukur, etc., in Part III.	Tamizannesa Khatun and others.	4,410 3 10	..	3,425 11 11
8433	Meyadi Mahal Gopechar, pargana Khizirpur.	1,116 0 0	Whole estate.	....	Lalit Mohan Ray ..	..	418 0 0	
9069	Deara Mahal Char Kukurhati, pargana Khalilabad.	2,304 0 0	Do. ..	....	Bhubar Mohan Saha and others. Auction purchaser Babu Jogendra Kumar Mukherjee, Manager, Swarnamayee Debi Court of Ward's Estate.	..	201 12 6	..
9762	Meyodi Mahal Char Dilarpur, pargana Bardakhat.	5,335 0 0	Do. ..	....	Bipin Behari Saha Sardar and others. Auction purchaser Adinath Ghose	..	2,001 0 0	..
10408	Dayeni Mahal Char Kalim, pargana Sinduri.	1,339 6 7	..	Separate account No. 1 consisting of 8 annas share. All other shares than that specified above will be excluded from sale, viz., separate account No. 2 and residue share consisting of 8 annas share.	Satya Charan Dutta	669 11 4	..	140 8 0
10804	Deara Mahal Kunjanagar, pargana Bikrampur.	1,159 0 0	Whole estate.	....	Manmatha Nath Basak and others.	..	1,013 0 0	..
10886	Deara Mahal Somibad, pargana Bardakhat.	964 0 0	Do. ..	....	Devendra Chandra Ray Choudhury and others. Auction purchaser Durgesh Chandra Bhattacharya.	..	682 0 0	..
11024	Deara Mahal Chandpur, pargana Bardakhat, Tappe Panchbhag.	1,676 0 0	Do. ..	....	Jogobandhu Ray and others.	..	1,276 0 0	..
11037	Taluk Char Binodepur, pargana Makimpur.	1,205 0 0	Do. ..	....	Srinath Kar and others. Acution purchaser Ramani Mohan Barari, B.A.	..	137 2 7	..
15642	Deara Mahal Char Saidpur, Tappe Ram Bhowal.	692 0 0	Do. ..	....	Md. Barkatulla and others. Auction purchaser Jolekha Khatun.	..	260 0 0	..
15727	Deara Mahal Char Chamardaha, pargana Jahangirnagar.	652 0 0	Do. ..	....	Girish Chandra Das, Receiver to the estate of Kripamayee Debi and others.	..	149 10 11	..
15793	Deara Mahal Ballarpur, pargana Sultan Pratap, Tappe Dhamrai.	710 0 0	Do.	....	Ditto ..	..	79 10 7	..

Tauzi No.	Name of mahal and pargana.	Sadar jama of the whole estate.	Whether the whole estate is to be sold	If only a share is to be sold, specification of such share or shares.	Names of proprietors of property to be sold.	If only a share is to be sold, the sadar jama of such share.	If the whole estate is to be sold, the arrears due from it.	If only a share is to be sold, the arrears due from it.
1	2	3	4	5	6	7	8	9
		Rs. a. p.				Rs. a p.	Rs. a. p.	Rs. a. p.
15794	Deara Mahal Mushurikhola, pargana Jahangirnagar, Bartali.	556 0 0	Whole estate.	....	Amrita Lal Choudhury and others.	..	82 14 0	..
15842	Deara Estate Baherchar, pargana Nil.	587 0 0	Do. ..	....	Mahendra Nath Roy Choudhury and others. Auction purchaser Ramani Mohan Barari, R.A.	..	109 14 7	..
15862	Lakhi Kanta Deb Bhowmik Roy Choudhury, pargana Bardakhat.	858 14 0	Do. ..	....	Lakshi Kanta De Bhowmik Roy Choudhury and others.	..	214 10 0	..
16032	Meyadi Mahal Char Dilarpur Nasaraddi Sarkar, pargana Bardakhat.	2,723 0 0	Do. ..	....	Lalit Mohan Ray and another. Auction purchaser Lalit Mohan Ray.	..	2,042 0 0	..
16090	Deara Mahal Kismat Hargaz Birendra Nath Ray Choudhury, pargana Isakabad.	1,342 0 0	Do. ..	....	Birendra Nath Ray Choudhury.	..	693 9 9	..
16489	Surplus or excess land of Gopalpur, pargana Nasti.	2,610 0 0	..	Residue share consisting of 4 annas share. All other shares than that specified above will be excluded from sale, viz., separate account No. 1 consisting of 12 annas share only.	Brindarani Dasya and another.	652 8 0	..	89 8 0

The notice is issued in respect of instalments of revenue which were due on or before the 30th Agrahayan, 1341 B.S. of which the latest date of payment was the 12th January 1935.

J. R. BLAIR, Collector.

Dacca, the 19th February 1935.

Notification A.

NOTICE is hereby given, under sections 6 and 13, Act XI of 1859, that the undermentioned estates and shares of estates in the district of Malda will be put up for sale at the office of the Collector of that district on the 26th March 1935, at 12 noon, for arrears of revenue and other demands which by law are realisable as arrears of land revenue.

When in columns 5, 7 and 9 of the following statement it is stated that only a share is to be sold, it is to be understood that a separate account is kept for that share :—

Tauzi No.	Name of mahal and pargana.	Sadar jama of whole estate.	Whether the whole estate is to be sold.	If only a share is to be sold, specification of such share or shares.	Names of proprietors of property to be sold.	If only a share is to be sold, the sadar jama of such share.	If the whole estate is to be sold, the arrears due from it.	If only a share is to be sold, the arrears due from it.
1	2	3	4	5	6	7	8	9
		Rs. a. p.				Rs. a. p.	Rs. a. p.	Rs. a. p.
3	Taraf Amrak, pargana Chandlai.	1,769 2 7	Whole	....	Brojendra Mohan Moitra and Gopikul Mohan Moitra.	..	665 5 10	..
13	Kismat pargana Bansoloie Pattapur, pargana Do.	4,113 6 3	..	13-R. S. 15 as. 10 g. share.	Ditto ..	2,261 8 6	..	770 13 5
38	Kismat 4 annas, toke Bhadoir, motaloke Chandpur and others, pargana Rajnagar.	1,101 14 0	..	38-R. S. 8 annas share.	Murali Lal Choudhury.	550 15 0	..	142 7 0
84	Taraf Hossainpur, pargana Kotowali.	2,614 12 0	Whole	....	Gossain Rudrananda Giri.	..	861 0 0	..
89	Kismat pargana Habelitara, pargana Habelitara.	984 5 0	Do.	....	Mohant Bhagaban Das, sebait on behalf of Sree Sree Iswar Raghunath Das Thakur.	..	227 0 0	..
118	Taraf Jadunagar Nimgachhi, pargana Bhatia Gopalpur	1,653 14 9	..	118-1. 16 annas share of Jadabnagar and 3 other mauzas.	Md. Ichha Sha and others.	862 15 0	..	22 8 0
125	Kismat pargana Kashimnagar, pargana Kashimnagar.	1,036 8 0	..	125-R. S. 9 as. 3 g. 2 k. 2 kr. share of the whole estate.	Purna Chandra Mallik and others.	593 6 0	..	6 14 0
146	Taraf Khani Alampur, pargana Bhatia Gopalpur.	11,069 2 2	Whole	146-R. S. 8 annas share.	Kumar Krishna Ghosh.	5,534 9 1	..	799 4 5
146	Ditto ..	11,069 2 2	Do.	146-1. 8 annas share	Tarangini Dasi, guardian on behalf of minors Niroj Krishna Ghose and others.	5,534 9 1	..	799 4 5
163	Toke Bhaktipur, motaloke mauza Madhaipur, pargana Rukunpur.	1,188 14 0	..	163-1. 8 annas share of the whole estate.	Prafulla Kumar Banerjee.	594 7 0	..	200 8 0
205	Taraf Raghunathpur and others, pargana Bhatia Gopalpur.	4,405 10 4	..	205-7. 16 annas share of mauza Yadgarpur and 15 other mauzas.	Sripatibhuson Das and others.	2,120 5 0	..	395 1 0
205	Ditto ..	4,405 10 4	..	205-13. 6 annas share of mauzas Raghunathpur and others.	Dinabandhu Singh Jha and others.	857 0 0	..	81 3 0
221	Taraf Sadipur, pargana Kotwoali.	693 3 0	Whole	....	Gossain Rudrananda Giri.	..	200 0 0	..
233	Taraf Tikoli and others, pargana Chandlai.	1,841 13 0	..	233-1. 16 annas share of mauzas Abhayanandapur, Gopalchandi, Gossainpur, Raitan *alias* Bulbul, Bil Alal, Bil Dighi, Bil Barda, Baidyapur, Bhoje *alias* Bhojan, Mirzapur and Harinathpur; 8 annas share of mauzas Gokulpur and Sarjana; 4 annas share of mauza Maruat and 7 as. 6 g. 2 k. 2 kr. share of mauzas Parila and Salalpur.	Radharaman Chowdhury.	844 3 0	..	280 12 0
554	4th Toke, 4 annas of mauza Subail, motaloke lat Chandpur, pargana Rajnagar.	1,101 14 0	..	554-R. S. 14 as. 6 g. 2 k. 2 kr. share of the whole estate.	Bibi Fatema Khatun Chowdhurani, wife of Wahed Baksh Chowdhury and others.	987 2 0	..	340 2 0
581	Kashimpur, pargana Kashimpur.	2,311 15 0	..	581-7. 5 as. 12½ g. share of Indrasail and 27 other mauzas.	Mirza Abul Hossain Beg.	599 2 0	..	194 0 0
597	Taraf Raghabbati, pargana Islampur.	6,152 7 0	..	597-R. S. 8 annas share of mauzas Airmari and others; and 16 annas share of mauzas Gota and others.	Kali Charan Singh	3,482 3 0	..	317 8 0

(1) In cases in which shares of estates are advertised, only those shares as mentioned above will be put to sale and all other shares will be excluded.

(2) This notification is issued in respect of instalments of revenue which were due on or before 30th Agrahayan, 1341 B.S., of which the latest date of payment was 12th January 1935.

G. B. GHOSHAL, *for* Collector.

Malda, the 19th February 1935.

Notification A.

NOTICE is hereby given, under sections 8 and 13, Act XI of 1859, that the undermentioned estates and shares of estates in the district of Burdwan will be put up for sale at the office of the Collector of that district on the 25th March 1935, at 12 noon, for arrears of revenue and other demands which by law are realizable as arrears of land revenue.

When in columns 5, 7 and 9 of the following statement it is stated that only a share is to be sold, it is to be understood that a separate account is kept for that share :—

Tauzi No.	Name of mahal and pargana.	Sadar jama of whole estate.	Whether the whole estate is to be sold.	If only a share is to be sold, specification of such share or shares.	Names of proprietors of property to be sold.	If only a share is to be sold, the sadar jama of such share.	If the whole estate is to be sold, the arrears due from it.	If only a share is to be sold, the arrears due from it.
1	2	3	4	5	6	7	8	9
		Rs. a. p.				Rs. a. p.	Rs. a. p.	Rs. a. p.
28	Paligram, pargana Ajmatshahi.	2,676 8 9	Whole estate is to be sold.	....	Manadamayi Dasi, guardian of minors Sadananda Ray and others.	..	993 1 1	..
101	Chandpur, pargana Amirabad.	1,740 8 3	Do. ..	....	Sajani Mohan Mullick and others.	..	447 15 11 Police Revenue— 6 12 9	..
19	Gidhagram, pargana Arsha.	7,308 12 9	..	S. A. No. 12—1 a. 6 g. 2 k. 2 cr. All other shares than that specified will be excluded from the sale.	Sidheswar Banerjee and others.	609 3 0	..	228 12 3
20	Bistoopur, pargana Bagha.	62,970 14 6	..	S. A. No. 5— 13 g. 2 k. 2 cr. All other shares than that specified will be excluded from the sale.	Dina Nath Tewari and others as sebait of Sridhar Lal Jiu Thakur.	2,694 1 0	..	1,322 0 0 September 1934— 323 0 0 January 1935— 999 0 0
								1,322 0 0
21	Mahata, pargana Bagha.	11,672 3 6	..	S. A. No. 2—1 a. 5 g. 3 k. 2 cr. 1½ dt. All other shares than that specified will be excluded from the sale.	Satindra Nath Panja and others.	947 11 9	..	118 0 6
93	Karni, pargana Benodenagar.	1,399 7 6	Whole estate is to be sold.	....	Khitish Chandra Banerjee and others.	..	571 10 2 September 1934— 25 8 1 January 1935— 546 2 1	..
							571 10 2	
24	Kashinathpur, pargana Dhenya.	3,192 15 0	..	Residuary—14 annas. All other shares than that specified will be excluded from the sale.	Panchu Gopal Mukherjee and others.	2,793 13 0	..	648 11 11
64	Jageswardihi, pargana Dhenya.	3,953 6 0	Whole estate is to be sold.	....	Bibhuti Bhusan Pal Choudhury and others.	..	1,474 9 0	..
62	Palsona, pargana Dhenya.	7,400 11 11	..	Residuary—8 as. 6 g. 2 cr. ¼ dt.	Ganga Gobinda Chandra and others.	3,843 5 11	..	1,467 2 0 Police Revenue— 18 6 0 September 1934— 360 7 3 January 1935— 1,106 10 9
								1,467 2 0
				S. A. No. 5—1 a. 5 g. 2¼ dt. All other shares than that specified will be excluded from the sale.	Dhanapati Chandra	579 12 9	..	72 2 4
5171	Haldi, etc., pargana Burdwan.	1,559 1 6	Whole estate is to be sold.	....	Panchu Gopal Mukherjee and others.	..	355 6 6	..
5174	Salkuni, pargana Burdwan.	1,689 0 0	..	Residuary—8 annas share. All other shares than that specified will be excluded from the sale.	Manadamayi Dasi, guardian of minors Sadananda Ray and others.	841 1 0	..	311 12 9
5248	Deypara, pargana Burdwan.	787 7 0	Whole estate is to be sold.	....	Panchu Gopal Mukherjee and others.	..	94 8 10	..
5261	Ditto ..	786 1 0	Do. ..	....	Ditto ..	..	93 14 8	..
27	Sahapur, pargana Jahangirabad.	8,506 3 0	Do. ..	....	Hari Das Saha and others.	..	3,550 3 11 September 1934— 383 11 7 January 1935— 3,166 8 4	..
							3,550 3 11	

Tauzi No.	Name of mahal and pargana.	Sadar jama of whole estate.	Whether the whole estate is to be sold.	If only a share is to be sold, specification of such share or shares.	Names of proprietors of property to be sold.	If only a share is to be sold, the sadar jama of such share.	If the whole estate is to be sold, the arrears due from it.	If only a share is to be sold, the arrears due from it.
1	2	3	4	5	6	7	8	9
		Rs. a. p.				Rs. a. p.	Rs. a. p.	Rs. a. p.
25	Kantalgachi, pargana Chutipur.	1,579 13 4	..	S. A. No. 4—5 as. 15 g. 2 k. 2 cr. 2 6806/9479 dt. All other shares than that specified will be excluded from the sale.	Sayed Mazhuran Moti Choudhury and others.	571 7 0	..	206 1 8
114	Dehura, pargana Chutipur.	990 6 5	Whole estate is to be sold.	....	Durgesnandini Debi as sebait of Ram Sita, Sridhar Jain and Shib Thakur.	..	375 0 1	..
135	Gouripur, pargana Chutipur.	1,219 5 9	..	Residuary—7as. 7g. 1 k. 2 55620/234117 dt. All other shares than that specified will be excluded from the sale.	Balai Chand Choudhury and others.	561 5 9	..	1 4 0
65	Majida, pargana Patuli.	9,381 6 9	..	S. A. No. 6—1 a. 15 g. 2 k. 2 dt.	Amiya Prosad Mullick and others.	1,044 6 6	..	389 13 6
				S. A. No. 7—1 a. 15 g. 2 k. 2 dt.	Panchu Gopal Chakravarty.	1,044 10 2	..	389 14 10
				S. A. No. 8—2 as. 13 g. 1 k. 1 cr.	Ram Ranjan Mullick and others.	1,566 10 1	..	1,580 2 10
				All other shares than that specified will be excluded from the sale.				June 1933— 13 8 9 September 1933— 237 7 5 January 1934— 584 12 4 March 1934— 539 15 8 June 1934— 204 0 8
								1,580 2 10
74	Patuli, pargana Patuli.	2,796 9 0	..	S. A. No. 3—5 as. 12g. All other shares than that specified will be excluded from the sale.	Gour Bhusan Chatterjee.	1,007 11 0	..	379 10 11
104	Surdanga, pargana Mamdanipur.	1,874 8 10	Whole estate is to be sold.	....	Sachhidananda Basu and others.	..	559 0 0	..
107	Islampur, pargana Mamdanipur.	3,957 12 9	..	S. A. No. 4—3 as. 3 g. 2 k. 1 cr. 4 dt. All other shares than that specified will be excluded from the sale.	Ashutosh Chandra Mitra.	786 8 0	..	301 13 5
174	Goara, pargana Mamdanipur.	694 5 0	Whole estate is to be sold.	....	Monindra Nath Bhattacharjee.	..	201 5 0	..
170	Santoshpur, pargana Raipur.	638 6 6	Do. ..	....	Sankar Kinker Hazra and others.	..	160 3 3	..
160	Bengachia, pargana Satsaika.	641 15 5	..	Residuary—14 annas. All other shares than that specified will be excluded from the sale.	Tara Das Muhuri ..	561 11 5	..	190 1 5
5297	Rautgram, pargana Satsaika.	2,121 15 8	Whole estate is to be sold.	....	Matwali Fatema Khatun.	..	710 0 0	..
5298	Gopalpur, pargana Satsaika.	677 9 7	Do. ..	....	Rajendra Ch. Mitra, sebait of Durgamata Thakurani.	..	218 9 9	..
5170	Dankadanga, pargana Sahabad.	6,421 15 8	..	S. A. No. 1—2 as. 13 g. 1 k. 1 cr.	Indumati Debi, guardian of minor Baidya Nath Ray.	1,070 5 4	..	399 4 4
				S. A. No. 2—2 as. 13 g. 1 k. 1 cr. All other shares than that specified will be excluded from the sale.	Mrinamayi Debi ..	1,070 5 4	..	242 1 8
82	Kalikapur, pargana Sergor.	522 12 4	Whole estate is to be sold.	....	Dharani Dhar Barman.	..	167 13 10	..

The notice is issued in respect of instalments of revenue which were due on or before the 30th Agrahayan, 1341 B.S., of which the latest date of payment was 12th January 1935 except in respect of tauzi Nos. 20(5), 93, 62R and 27 for which the latest date of payments were 28th September 1934 and 12th January 1935 and tauzi No. 65(6) for which the latest date of payments were 28th June 1933, 5th October 1933, 12th January 1934, 28th March 1934 and 28th June 1934.

Burdwan, the 22nd February 1935.

[ILLEGIBLE], *for* Collector.

Notification A.

NOTICE is hereby given, under sections 6 and 13, Act XI of 1859, that the undermentioned estates and shares of estates in the district of Murshidabad will be put up to sale at the office of the Collector of that district on the 25th March 1935, at 12 noon, for arrears of revenue and other demands which by law are realisable as land revenue.

When in columns 5, 7 and 9 of the following statement it is stated that only a share is to be sold, it is to be understood that a separate account is keep for that share :—

Tauzi No.	Name of mahal and pargana.	Sadar jama of whole estate.	Whether the whole estate is to be sold.	If only a share is to be sold, specification of such share or shares.	Names of proprietors of property to be sold.	If only a share is to be sold, the sadar jama of such share.	If the whole estate is to be sold, the arrears due from it.	If only a share is to be sold, the arrears due from it.
1	2	3	4	5	6	7	8	9
		Rs. a. p.				Rs. a. p.	Rs. a. p.	Rs. a. p.
5	Dihi Kutabpur, pargana Sherpur.	..	No ..	Residuary share 1 a. 7 g. 1 c. 2 kg. 6 til 2 c. of dt. 2 kr. of dt.	Syed Abdul Ohid ..	610 12 2 Police— 4 14 5	..	282 0 0 Police— 1 2 6
				S. A. No. 3 share 1 a. 4 g. 3c. 1 kg. 2½ tils.	Syed Abu Asgar ..	555 11 10 Police— 4 3 11	..	255 3 11 Police— 0 5 1
				S. A. No. 4 share 1 a. 4 g. 3 c. 1 kg. 2½ tils.	Ditto ..	555 11 10 Police— 4 3 11	..	254 15 0 Police— 0 12 3
				S. A. No. 12 share 1 a. 18 g. 3 c. 3 kg. 6 tils 2 c. of til 2 kr. of til.	Syed Md. Abdul Hafiz	872 5 3 Police— 6 10 0	..	397 0 4 Police— 1 11 0
				All other shares besides that specified will be excluded from the sale.				
9	Kashipur, pargana Kashipur.	..	No ..	S. A. No. 3 share 3 as. 4 g. 3 c. 2 kg. 4 til.	Rudra Nath Roy Choudhury.	1,637 4 0	..	485 3 0
				S. A. No. 5 share 1a. 18 g. 3kg. 15 tils.	Sourindra Krishna Singha and others sebaits of Sri Sri Iswar Durga Debi Thakurani.	964 0 0	..	283 15 0
				S. A. No. 6 share 1 a. 11 g. 3 kg. 6 tils.	Jogemaya Debi and another.	787 6 6	..	231 13 3
				S. A. No. 8 share 1 a. 3 c. 18 tils.	Harimoti Choudhurany as mother and guardian of Phani Bhusan Rai Chaudhury, minor.	524 15 0	..	154 9 6
				S. A. No. 11 share 3 as. 2 c. 2 kg.	Gosta Behary Mondal certified guardian of Rash Behary Mondal.	1,529 6 0	..	154 6 5
				All other shares besides that specified will be excluded from the sale.				
12	Kutabpur, pargana Kutabpur.	2,301 1 1	Whole	..	Maulvi Golam Gous and others.	..	549 7 11	..
13	Kulberia, pargana Kulberia.	..	No	Residuary share 8 annas.	Nani Gopal Chakravarty as sebait of Gopal Deb Thakur.	1,865 14 7	..	498 2 2
				S. A. No. 1 share 8 annas.	Khagendra Narayan Bandopadhya Choudhury and others.	1,865 14 7	..	498 2 2
				All other shares besides that specified will be excluded from the sale.				
21	Ditto ..	..	No ..	S. A. No. 12 share 7 as. 4 g. 1 c. 1 kr. 3 kg. 1 dt. 10½ tils 1½ job.	Tarakiukar Chandra	534 7 4	..	133 1 3
				All other shares besides that specified will be excluded from the sale.				
25	Korjara, pargana Beharole.	..	No ..	Residuary share 12 annas.	Sudhindra Mohan Bagchi and others.	800 14 3	..	161 4 0
				All other shares besides that specified will be excluded from the sale.				
39	Jhikarhati, pargana Sahazadpur.	1,142 9 0	Whole ..	..	Shib Kumar Das, Receiver to the estate of Insolvent Sudhir Krishna Bandopadhya, sebait of Sri Sri Radha Kanta Jew Thakur.	..	401 0 0	..
49	Kumari Kasimpur, pargana Khargram.	523 5 2	Do. ..	..	Bijay Gobinda Dubey	..	135 15 0	..
55	Kismut pargana Khargram, pargana Khargram.	..	No ..	S. A. No. 18 share 3 as. 12 g. 1 c. 1 kg. 8 tils. 2 c. of til 1 kg. of til. 15 til of til.	Mohadeb Roy Choudhury.	535 15 4	..	219 10 7
				All other shares besides that specified will be excluded from the sale.				

Tauz No.	Name of mahal and pargana.	Sadar jama of whole estate.	Whether the whole estate is to be sold.	If only a share is to be sold, specification of such share or shares.	Names of proprietors of property to be sold.	If only a share is to be sold, the sadar jama of such share.	If the whole estate is to be sold, the arrears due from it.	If only a share is to be sold, the arrears due from it.
1	2	3	4	5	6	7	8	9
		Rs. a. p.				Rs. a. p.	Rs. a. p.	Rs. a. p.
56	Kismut pargana Khargram, pargana Khargram.	..	No ..	Residuary share 2as. 2g. 1c. 2kg. 1kr. 4 til of dt. 3 kg of til of dt. 1 kr. of til of dt. 7 till of til of dt. 1 kg. 7 til 1c. 3kg. 6⅛til of a til of dt. All other shares besides that specified will be excluded from the sale.	Fullara Charan Banerjee and others.	572 14 7	..	231 2 5
63	Kharija taluk Kismat Khalilpur, pargana Islampur.	506 10 8	Whole	....	Shubhasini Gupta and others, sebait of Lakshmi Janardon Thakur and other Thakurs.	..	286 12 6	..
65	Kismat Khagjana Taraf Kumirdaha, pargana Samaskhali.	..	No ..	Residuary share 10as. 13g. 1c. 1kr. All other shares besides that specified will be excluded from the sale.	Bhupendra Lal Choudhury and others.	802 2 7	..	176 14 7
70	Dihi Gankar, pargana Gankar	..	No ..	Residuary share 3as. 16g. 1c. 1kr.	Krishna Chandra Baral and others, sebaits of Sri Sri Iswar Brindaban Behari Deb Thakur.	3,484 2 9 Police— 63 1 10	..	1,636 9 11 Police— 15 12 5
				S. A. No. 1 share 3as. 16g. 2kr. 2dt.	Gobinda Das Nath, sebait of Sri Sri Iswar Brindaban Behari Deb Thakur.	3,482 15 0 Police— 63 0 2	..	1,651 7 11 Police— 15 12 1
				S. A. No. 2 share 3as. 16g. 2kr. 2dt.	Shyamcharan Nath, sebait of Sri Sri Iswar Brindaban Behari Deb Thakur.	3,482 15 0 Police— 63 0 3	..	1,651 7 10 Police— 15 12 0
				S. A. No. 3 share 3as. 16g. 2kr. 2dt.	Radha Ballav Nath, sebait of Sri Sri Iswar Brindaban Behari Deb Thakur.	3,482 15 0 Police— 63 0 2	..	1,651 7 10 Police— 15 12 1
				S. A. No. 4 share, 15 gandas. All other shares besides that specified will be excluded from the sale.	Sarojini Bala Dasi as mother and guardian of Sailendra Kumar Baral and others, minors, sebaits of Sri Sri Iswar Brindaban Behari Deb Thakur.	685 3 8 Police— 12 6 5	..	340 0 0 Police— 3 1 8
71	Dihi Gangodda, pargana Gankar.	..	No ..	S. A. No. 1 share 11as. 7g. 3c. 2kr. 2½dt. All other shares besides that specified will be excluded from the sale.	Krishna Gobinda Bhoumik as common manager to the estate of Probodh Chandra Sarkar, sebait of Sri Sri Iswar Brindaban Behari Deb Thakur, and others.	1,048 4 0 Police— 35 3 0	..	872 9 9 Police— 9 3 0
83	Kismat mauza Gurulia, pargana Mohalandi.	..	No ..	Residuary share 10as. 19g. 1dt. All other shares besides that specified will be excluded from the sale.	Lalit Mohan Mitra and others.	1,056 11 5	..	67 15 9
97	Dihi Churigram, pargana Serpur.	..	No ..	Residuary share 8 annas. All other shares besides that specified will be excluded from the sale.	Niranjan Gupta, common manager to the estate of Bhupendra Kumar and Biswanath Sarkar.	880 14 10	..	409 0 5
101	Kismat Pargana Chunakhali, pargana Chunakhali.	..	No ..	S. A. No. 1 share, 9 annas.	Shubhadra Bai Choudhurani, sebait of Sri Sri Iswar Raghunath Deb Thakur.	857 7 4	..	241 15 5
112	Kismat Mauza Chandipur, pargana Kashipur.	602 0 7	Whole	....	Izak Mirza and another.	..	136 0 0	..
113	Mauza Chamunda, pargana Muraripur.	756 5 8	Do. ..	....	Lalit Mohan Singh and others.	..	378 10 8	..
165	Taraf Tolla Noapara, pargana Gankar.	2,659 2 11	Do. ..	....	Ditto ..	..	1,292 12 10	..
167	Dayanagor Kismat, pargana Danyanagor.	..	No ..	Residuary share 12 annas. All other shares besides that specified will be excluded from the sale.	Choudhury Muhammad Abdul Azim Abu Ahamad *alias* Abal Muktar and and others.	7,193 1 6	..	3,118 0 1
209	Nawda Belun, pargana Dhawa.	..	No	Residuary share 10 as. 13 g. 1 c. 1 kr. All other shares besides that specified will be excluded from the sale.	Sudhindra Nath Mukherjee and others.	1,170 10 5	..	320 0 0

Tauzi No.	Name of mahal and pargana.	Sadar jama of whole estate.	Whether the whole estate is to be sold.	If only a share is to be sold, specification of such share or shares.	Names of proprietors of property to be sold.	If only a share is to be sold, the sadar jama of such share.	If the whole estate is to be sold, the arrears due from it.	If only a share is to be sold, the arrears due from it.
1	2	3	4	5	6	7	8	9
		Rs. a. p.				Rs. a. p.	Rs. a. p.	Rs. a. p.
221	Huda Patkabari, pargana Patkabari.	..	No	Residuary share 4 as. 13 g. 1 c. 1 kr.	Syed Taki Ali Mirza *alias* Syed Rais Mirza.	3,308 9 3 Police— 54 5 10	..	1,489 4 8 Police— 13 9 6
				S. A. No. 1 share 2 annas.	Syed Kaikaus Mirza *alias* Chunni Shaheb.	1,417 15 9 Police— 23 4 0	..	638 3 9 Police— 5 13 1
				S. A. No. 3 share 1 a. 17 g. 2 c.	Syed Fatch Ali Mirza *alias* Bugga Shaheb.	1,329 5 9 Police— 21 13 6	..	598 6 1 Police— 5 7 5
				S. A. No. 4 share 1 a. 17 g. 2 c.	Syed Nunha Mirza *alias* Nunha Shaheb.	1,329 5 9 Police— 21 13 6	..	598 6 1 Police— 5 7 5
				All other shares besides that specified will be excluded from the sale.				
254	Fatesing Kismat Pargana, pargana Fatesing.	..	No	S. A. No. 1 share 3 as. 4 g.	Dwijendra Narayan Roy.	9,269 2 8	..	3,810 12 10
				All other shares besides that specified will be excluded from the sale.				
262	Huda Baranagar, pargana Muraripur.	4,062 13 1 Police— 72 2 4	Whole	....	Purna Chandra Chatterjee and another.	..	1,720 8 3 Police— 6 6 6	..
264	Dihi Bara Simulia, pargana Gankar.	3,575 6 3 Police— 64 11 4	Do.	....	Amulya Ratan Chandra.	..	709 11 9 Police— 8 0 11	..
279	Kismut mauza Basudebkhali, pargana Mohalandi.	..	No	S. A. No. 1 share 3 as. 5 g. 2 c. 6½ til.	Khagendra Behari Datta and others.	547 11 0	..	237 8 9
				All other shares besides that specified will be excluded from the sale.				
297	Birbhadrapur *alias* Birchandrapur, pargana Kastagarh.	695 13 4	Whole	....	Prasanna Kumar Banerjee and others.	..	48 6 6	..
323	Taraf Bagha Mitrapur, pargana Nowanagar.	663 9 6	Do.	....	Nitai Charan Biswas as sebait of Sri Sri Iswar Shib Thakur.	..	308 4 3	..
324	Taraf Bir Thamba, pargana Sahajadpur.	711 13 2	Do.	....	Nalinakshya Roy and others.	..	298 11 6	..
327	Kismut Baintali, pargana Baintali.	2,561 1 1	Do.	....	Kali Charan Singha and others.	..	1,126 6 5	..
328	Kismut Pargana Baintali, pargana Baintali.	2,316 8 9	Do.	....	Ditto ..	..	679 1 8	..
332	Huda Bhawanipur, pargana Akbarshahi.	..	No	Residuary share 6 as. 8 g.	Aditya Prosad Bagchi and others.	1,085 11 0	..	359 3 9
				All other shares besides that specified will be excluded from the sale.				
339	Dihi Moregram, pargana Sahabazpur.	4,824 14 9	Whole	....	Lala Kameswar Nath and another.	..	701 14 7	..
341	Dih Mastafapur, pargana Serpur.	..	No	S. A. No. 7 share 2 as. 3 g. 3 c.	Madan Mohan Tribedi and others.	1,055 8 11	..	495 7 11
				All other shares besides that specified will be excluded from the sale.				
342	Dihi Monaikandra, pargana Serpur.	..	No ..	Residuary share 2 as. 13 g. 1 c. 1 kr.	Nabendu Narayan Roy Choudhury as sebait of Sri Sri Iswar Mohamaya Raj Rajeswari Thakurani.	575 7 0 Police— 4 6 5	..	271 0 4 Police— 1 1 7
				S. A. No. 2 share 5 as. 6 g. 2 c. 2 kr.	Bishnupada Misra and another.	1,150 14 0 Police— 8 12 11	..	542 0 9 Police— 2 3 2
				S. A. No. 3 share 5 as. 6 g. 2 c. 2 kr.	Manajendra Narayan Roy Choudhury and others, sebaits of Sri Sri Iswar Mohamaya Raj Rajeswari Thakurani.	1,150 14 0 Police— 8 12 11	..	542 0 9 Police— 2 3 2
				S. A. No. 4 share 2 as. 13 g. 1 c. 1 kr.	Satyendra Narayan Roy Choudhury as sebait of Sri Sri Iswar Mohamaya Raj Rajeswari Thakurani.	575 6 11 Police— 4 6 5	..	271 0 3 Police— 0 0 1
				All other shares besides that specified will be excluded from the sale.				

Touzi No.	Name of mahal and pargana.	Sadar jama of whole estate.	Whether the whole estate is to be sold.	If only a share is to be sold, specification of such share or shares.	Names of proprietors of property to be sold.	If only a share is to be sold, the sadar jama of such share.	If the whole estate is to be sold, the arrears due from it.	If only a share is to be sold, the arrears due from it.
1	2	3	4	5	6	7	8	9
		Rs. a. p.				Rs. a. p.	Rs. a. p.	Rs. a. p.
345	Mohanpur Pargana, pargana Mohanpur.	4,390 11 0	Whole	....	Bhola Nath Bhattacharjee as Receiver to the estate of Nirode Mohan Ghose Moulik and others, sebait of Sri Sri Iswar Radha Gobinda Deb Thakur.	..	1,182 14 11	..
346	Mohalandi Kismut Pargana, pargana Mahalandi.	..	No ..	S. A. No. 1 share 4 annas. All other shares besides that specified will be excluded from the sale.	Khagendra Behari Datta and others.	612 14 3	..	234 1 8
353	Ditto ..	..	No ..	Residuary share 6 annas. All other shares besides that specified will be excluded from the sale.	Khondkar Moulvi Mohammad Abu Ahasan and others.	629 5 9	..	229 1 8
364	Mouza Kismut Masumabad, pargana Masumabad.	1,236 1 1	Whole	....	Nitya Kali Dasya ..	..	511 8 0	..
369	Muhammadpur Jamserpur, pargana Dashazari.	752 4 10	Do. ..	....	Lalit Mohan Singha and others.	..	116 7 3	..
386	Taraf Matiapara, pargana Behorole.	..	No ..	S. A. No. 1 share 11 a. 10 g. All other shares besides that specified will be excluded from the sale.	Priya Nath Gangopadhya.	904 4 7	..	399 7 0
387	Mohadebnagar Taraf, pargana Rajshahi.	..	No ..	S. A. 3 share 4 as. 12 g. 2 c. All other shares besides that specified will be excluded from the sale.	Umapada Singha and others.	539 9 9	..	120 13 9
397	Rasulpur Kismut, pargana Serpur.	..	No ..	S. A. No. 2 share 5 as. 5 g.	Khondkar, Mohamad Abu Ahasan and others	825 10 6	..	326 12 9
				S. A. No. 3 share 3 as. 15 g. All other shares besides that specified will be excluded from the sale.	Khondkar Fazla Kader Abu Jamil as motowalli and Secretary to the Sijgram Hossainabad French High School Committee and others.	589 12 1	..	215 11 11
436	Kismat Pargana Shajahanpur, pargana Shajahanpur.	..	No ..	Residuary share 9 as. 12 g. All other shares besides that specified will be excluded from the sale.	Anila Bala Debi and another.	2,089 15 10	..	671 11 4
456	Samsabad Kismat Mouza, pargana Behorole.	..	No ..	S. A. No. 2 share 5 as. 5 g.	Khondakar Maulvi Mohamad Abu Ahasan and others.	2,029 2 2	..	759 13 9
				S. A. No. 3 share 3 as. 15 g.	Bibi Ummat Jakia and others.	1,449 6 1	..	506 1 1
				S. A. No. 5 share 1 a. 11 g. 2 c. 2 kr; All other shares besides that specified will be excluded from the sale.	Bibi Hafijatonnessa and another.	611 15 5	..	190 9 7
486	Dihi Hilora, pargana Sultanuzian	..	No ..	S. A. No. 1 share 8 annas. All other sharesbesides that specified will be excluded from the sale.	Mohini Mohan Sarkar, sebait of Sri Sri Iswar Giridhari Deb Thakur and other Thakurs.	2,434 14 1	..	577 4 10
487	Hariharpara Taraf Kismat, pargana Nasikka Fatepur.	..	No ..	S. A. No. 25 share 2 as. 1 kr. 1 dwip 2 5/12dt. All other shares besides that specified will be excluded from the sale.	Saroj Nath Roy Choudhury.	580 4 11	..	271 15 3
495	Mouza Harispur, pargana Kulberia.	520 0 0	Whole	....	Nirode Mohan Ghosh Moulik and others, sebaits of Sri Sri Joy Shib Durga.	..	139 11 9	..
499	Taraf Hilora, pargana Sultanuzian.	1,759 6 0	Do.	....	Radha Ballav Sarma Mohanta as sebait of Sri Sri Iswar Shyam Sundar Deb Thakur and others	..	383 6 11	..

Tauzi No.	Name of mahal and pargana.	Sadar jama of whole estate.	Whether the whole estate is to be sold.	If only a share is to be sold, specification of such share or shares.	Names of proprietors of property to be sold.	If only a share is to be sold, the sadar jama of such share.	If the whole estate is to be sold, the arrears due from it.	If only a share is to be sold, the arrears due from it.
1	2	3	4	5	6	7	8	9
		Rs. a. p.				Rs. a. p.	Rs. a. p.	Rs. a. p.
508	Dihi Atal, pargana Sherpur.	..	No	Residuary share 8 annas.	Nilabja Prova Debi as grandmother and guardian and Kiron Bala Singha as mother and guardian of Amrita Gopal Singha and another, minors.	1,726 5 0 Police— 13 3 4	..	613 1 1 Police— 3 4 10
				S. A. No. 4 share 3 as. 6 g. 2 c. 2 kr. All other shares besides that specified will be excluded from the sale.	Sourendra Krishna Singh and others, sebaits of Sri Sri Durga Debi Thakurani.	719 4 9 Police— 5 8 1	..	338 12 5 Police— 1 5 11
516	Taraf Munia Dihi, pargana Fatesing.	..	No ..	Residuary share 8 annas.	Krishna Sunalini Dasi, mother and guardian of Subodh Krishna Moulik and others, minors.	3,229 1 1	..	1,282 2 2
				S. A. No. 1 share 8 annas. All other shares besides that specified will be excluded from the sale.	Saroje Krishna Ghose Moulik.	3,229 1 1	..	1,199 15 11½
537	Kismat Pargana Akbarshahi, pargana Akbarshahi.	..	No ..	S. A. No. 5 share 3 annas.	Prokash Chandra Choudhury.	605 11 5	..	245 12 9
597	Nialishpara, pargana Mazafarpur.	1,151 8 0	Whole	....	Suresh Chandra Sen and another.	..	364 11 0	..
2745	Taraf Sundalpur, pargana Asadnagar.	528 11 6	Do. ..	....	Sishir Kumar Banerjee	..	132 0 0	..
2779	Taraf Kanaipara, pargana Asadnagar.	1,185 13 1	Do. ..	....	Dharani Kumar Ghose and another.	..	298 0 0	..
2780	Rambhadrapur Taraf, pargana Asadnagar.	1,028 2 7	Do. ..	....	Syed Sadek Reza	..	230 15 10	..
2797	Hay Charkapara Kismat, pargana Sultanuzian.	734 7 0	Do. ..	....	Maharaj Kumar Sashi Kanta Acharja.	..	360 0 0	..
3010	Bharwa, pargana Kutabpur.	..	No ..	Residuary share 13 as. 4 g. All other shares besides that specified will be excluded from the sale.	Lalit Mohan Mustafi and others.	578 2 7	..	168 0 0
598 Part II.	Char Mohula, pargana Chunakhali.	1,346 0 0	Whole	....	Mohini Mohan Chattopadhya and others.	..	337 0 0	..
2758 Part II.	Char Mirzapur, pargana Plasey.	3,720 0 0	Do.	....	Priya Nath Ganguli	..	930 0 0	..

This notice is issued in respect of instalments of revenue which were due on or before the 30th Agrahayan, 1341 B. S., of which the latest date of payment was 12th January, 1935 A. D.

Murshidabad, the 23rd February 1935.

A. HOSSAIN, *for* Collector.

Notification A.

NOTICE is hereby given, under sections 6 and 13, Act XI of 1859, that the under-mentioned estates and shares of estates in the district of Tippera, will be put up for sale at the office of the Collector of that district on the 25th March 1935, at 12 noon, for arrears of revenue and other demands which by law are realizable as arrears of land revenue.

When in columns 5, 7 and 9 of the following statement it is stated that only a share is to be sold, it is to be understood that a separate account is kept for that share :—

Tauzi No.	Name of mahal and pargana.	Sadar jama of whole estate.	Whether the whole estate is to be sold.	If only a share is to be sold, specification of such share or shares.	Names of proprietors of property to be sold.	If only a share is to be sold, the sadar jama of such share.	If the whole estate is to be sold, the arrears due from it.	If only a share is to be sold, the arrears due from it.
1	2	3	4	5	6	7	8	9
		Rs. a. p.				Rs. a. p.	Rs. a. p.	Rs. a. p.
22	Bardakhat Pargana, 2 gds. 2 c. 1 kt. 2 dt. kismat, pargana Bardakhat.	2,800 9 1	..	Tauzi No. 22/9, hissa 2 as. 19 gds. 3 c. 1 kt. 3/8 dt. All other shares than that specified will be excluded from the sale.	Taleb Ali *alias* Alep Ali and others.	526 4 8	..	248 9 10
26	Priya Nath Byask taluk, pargana Bardakhat.	3,227 3 2	Whole	....	Mr. S. Guha, Bar.-at-law, Common Manager on behalf of Khirode Nath Byask and others.		806 15 5	..
49	Tape Durgapur, pargana Durgapur Tape.	2,485 7 11	..	Tauzi No. 49/R, hissa 2as. 5gds. 2c. 2 4/7kt.	Abdul Matin Choudhury.	355 1 1	..	166 12 11
				Tauzi No. 49/2, hissa 3as. 7gds. 3c. 1kt. 3 dt. 2 9/20 dhuls. All other shares than that specified will be excluded from the sale.	Md. Eskander Ali Choudhury and others.	527 3 0	..	42 3 4
75	Suresh Chandra Mukhopadhya, pargana Mahabbatpur.	964 14 10	Whole	....	Suresh Chandra Mukhopadhya and others.	..	241 0 0	..
94	Bipin Behari Roy Chowdhury, pargana Homnabad.	678 2 1	Do. ..	....	Bepin Behari Roy Choudhury.	..	169 0 0	..
117	Indra Narayan Basu taluk, pargana Mahal Cherpata.	735 3 8	..	Tauzi No. 117/R, hissa 13as. 8gds. 2c. 6/7 kt. All other shares than that specified will be excluded from the sale.	Jajneswar Bose and others.	617 1 4	..	9 4 7
190	Nowra Mahal, pargana Shyampur.	806 11 9	Whole	....	Basanta Kumar Sarma and others.	..	307 7 8	..
199	Narayanpur Pargana, 7 as. 5gds. kismat, pargana Narayanpur.	1,193 10 3	..	Tauzi No. 199/R, hissa 14 as. 1 gd. 3 c. 1 1/9 kt. All other shares than that specified will be excluded from the sale.	Srimati Kafurennessa Choudhurany and others.	1,051 4 11	..	503 12 8
200	Narottam Majumder, pargana Mahabbatpur.	546 2 2	Whole	....	Jogendra Chandra Paul Choudhury and others.	..	82 12 2	..
210	Haraprasanna Chakrabarty, pargana Tape Forkabad.	604 3 11	Do. ..	....	Haraprasanna Chakrabarty and others.	..	151 0 0	..
236	Ramdhan Majumdor taluk, pargana Mahabbatpur.	1,189 13 10	Do. ..	....	Hafeza Khatoon Choudhurany and others.	..	555 11 8	..
294	Syampur Mahal, pargana Syampur.	3,626 8 8	..	Tauzi No. 294/R, hissa 8 annas. All other shares than that specified will be excluded from the sale.	Satyendra Kumar Roy and others.	1,813 3 4	..	850 2 2
372	Ahmedpur mauza, by partition hissa 10 as. 13gds. 1 c. 1 kt., pargana Bardakhat.	818 15 0	Whole	....	Ananga Mohan Roy Choudhury, sebait for the estate of Sri Sri Kumudeswar Mahadeb.	..	278 10 8	..
396	Binode Behari Roy Choudhury, pargana Bardakhat.	1,489 12 0	Do. ..	....	Binode Behari Roy Choudhury and others.	..	794 13 9	..

Tauzi No.	Name of mahal and pargana.	Sadar jama of whole estate.	Whether the whole estate is to be sold.	If only a share is to be sold, specification of such share or shares.	Names of proprietors of property to be sold.	If only a share is to be sold, the sadar jama of such share.	If the whole estate is to be sold, the arrears due from it.	If only a share is to be sold, the arrears due from it.
1	2	3	4	5	6	7	8	9
		Rs. a. p.				Rs. a. p.	Rs. a. p.	Rs. a. p.
406	Bara Char No. 173, decreed under Act II of 1819, pargana Mahabbatpur.	1,584 12 0	..	Tauzi No. 406/R, hissa 5 as. 0 gds. 2 c. 2 kt. All other shares than that specified will be excluded from the sale.	Siddhi Gopal Sukul and others.	528 4 0	..	103 0 0
475	Majidpur & Joar, including Char Nos. 206 and 208 near Lalpur and Lalpur Bazar, pargana Bardakhat.	3,370 11 0	..	Tauzi No. 475/1, hissa 4 annas. All other shares than that specified will be excluded from the sale.	Srimati Brinda Rani Dasi.	842 10 10	..	286 12 8
1910	Ponsai Kismat Dehi No. 7, by partition hissa 9 annas, pargana Mehar.	671 14 5	Whole	....	Selamatulla Miah ..	..	103 15 2	..
1919	Char Gangaprasad No. 109, decreed under Act II of 1819, pargana Tape Kamrapur.	1,338 0 0	Do. ..	....	Nowab Ali Sarkar and others.	..	95 0 0	..
2065	Bisara Joar, by partition hissa 2 as. 6 gds. 2 c. 2 kt., pargana Bardakhat.	1,047 1 0	Do. ..	....	Profulla Kumar Roy Choudhury.	..	356 5 8	..
3056	Trailokya Nath Roy Choudhury, pargana Bardakhat.	744 14 0	Do. ..	....	Trailokya Nath Roy Choudhury.	..	416 15 3	..
3057	Hem Nalini Choudhurani, pargana Bardakhat.	744 14 0	Do. ..	....	Hem Nalini Choudhurany.	..	186 0 0	..
3407	Madan Gopal Sukul, pargana Mehar.	1,002 8 0	Do. ..	....	Madan Gopal Sukul and others.	..	250 8 0	..
3408	Gobinda Narayan Sukul, pargana Mehar.	1,002 8 0	Do. ..	....	Gobinda Narayan Sukul and others.	..	250 8 0	..
3409	Aud Behari Sukul, pargana Mehar.	1,494 14 0	Do. ..	....	Rameswar Sukul and others.	..	373 14 0	..
3415	Jajneswar Roy Choudhury, pargana Tora.	770 6 0	Do. ..	....	Nayantara Choudhurany on behalf of Jajneswar Roy Choudhury and others.	..	522 8 8	..
3664	Fatema Begum, pargana Bardakhat.	1,031 13 0	Do. ..	....	Fatema Begum ..	..	258 0 0	..
3665	Aktar Begum, pargana Bardakhat.	1,871 14 0	Do. ..	....	Syed Mahammad Bakhar *alias* Golam Hossein and others.	..	468 0 0	..
3823	Asrab Reza Choudhury, pargana Tape Forkabad.	768 5 0	Do. ..	....	Khetra Mohan Mukherjee.	..	292 0 0	..
3854	Jogendra Chandra Roy Choudhury, pargana Homnabad.	678 3 0	Do. ..	....	Jogendra Chandra Roy Choudhury.	..	160 0 0	..

This notice is issued in respect of instalments of revenue due on or before the 30th Agrahayan, 1341 B.S., of which the latest date of payment was 12th January 1935, A. D.

Comilla, the 22nd February 1935.

A. HYE, Addl. Collector.

Notification A.

NOTICE is hereby given, under sections 6 and 13, Act XI of 1859, and under section 11, Act VII of 1868, that the under-mentioned tenures and shares of tenures in the district of Tippera will be put up for sale at the office of the Collector of that district on the 25th March 1935, at 12 noon, for arrears of revenue and other demands which by law are realizable as arrears of land revenue.

When in columns 5, 7 and 9 of the following statement it is stated that only a share is to be sold, it is to be understood that a separate account is kept for that share :—

Tauzi number.	Name of taluk and pargana.	Sadar jama of whole tenure.	Whether the whole tenure is to be sold.	If only a share is to be sold, specification of such share or shares.	Names of proprietors of property to be be sold.	If only a share is to be sold, the sadar jama of such share.	If the whole tenure is to be sold, the arrears due from it.	If only a share is to be sold, the arrears due from it.
1	2	3	4	5	6	7	8	9
		Rs. a. p.				Rs. a. p.	Rs. a. p.	Rs. a. p.
1933	Joar Krishnanagar, pargana Bardakhat.	9,229 11 0	..	Tauzi No. 1933, khatian No. 2, hissa 5 as. 6 gds. 2 c. 2 kt. All other shares than that specified will be excluded from the sale.	Srimati Jyotirmayee Roy Choudhurany and others.	3,164 12 0	..	1,545 12 0 Cess— 43 7 6 1,589 3 6
2686	Taluk Mir Ramjan Ali, pargana Bardakhat.	1,991 13 0	Whole	....	Safiquer Rahman and others.	..	497 15 0 Cess— 25 15 0 523 14 0	..
2687	Bangora Dakhin Taluq Durlav Ram Deb, pargana Bardakhat.	1,445 3 0	Do. ..	....	Upendra Lochan Majumder and others.	..	361 5 0 Cess— 21 15 0 383 4 0	..
2691	Joar Darora, pargana Bardakhat.	2,871 3 0	..	Tauzi No. 2691, khatian No. 5, Myadi Patni taluk Ajodhya Ram Das.	Amrita Sekhar Das Gupta and others.	201 12 0	.. Cess— 0 14 9 17 11 9	16 13 0
				Tauzi No. 2691, khatian No. 24, Myadi Patni taluk Chand Tulla Das.	Ditto ..	308 4 0	.. Cess— 4 0 3 73 5 0	69 4 0
				Tauzi No. 2691, khatian No. 102, Myadi Patni taluk Gobinda Ram Das.	Ditto ..	207 6 0	.. Cess— 1 0 3 18 4 9	17 4 6
				Tauzi No. 2691, khatian Nos. 141 and 142, Myadi Patni taluk Hari Krishna Das.	Ditto ..	263 8 0	.. Cess— 1 0 9 18 8 0	17 7 3
				Tauzi No. 2691, khatian No. 184, Myadi Patni taluk Jagannath Das.	Kalipada Das Gupta and others.	249 1 0	.. Cess— 1 15 3 35 10 6	33 11 3
				Tauzi No. 2691, khatian No. 275, Myadi Patni taluk Nayan Ballav Das.	Amrita Sekhar Das Gupta and others.	277 5 0	.. Cess— 2 11 0 48 14 9	46 3 9
				Tauzi No. 2691, khatian No. 354, Myadi Patni taluk Hriday Ram Das Gupta. All other shares than that specified will be excluded from the sale.	Ditto ..	855 4 0	.. Cess— 12 6 6 226 3 6	213 13 0
2704	Joar Dhanapatikhola, pargana Bardakhat.	3,689 4 0	..	Tauzi No. 2704, khatian No. 6, hissa 4 annas.	Prokash Chandra Roy Sarkar and others.	890 9 0	.. Cess— 19 15 3 407 15 3	388 0 0
				Tauzi No. 2704, khatian No. 7, hissa 2 as. 17 gds. 3 c. 2 kt.	Radha Charan Nath Bhoumic.	644 15 0	.. Cess— 14 7 6 328 0 3	313 14 9
				Tauzi No. 2704, khatian No. 8, hissa 2 as. 2 kt.	Profulla Kumar Roy and others.	455 11 0	.. Cess— 10 3 6 124 2 6	113 15 0
				Tauzi No. 2704, khatian No. 9, hissa 1 a. 10 gds.	Abdul Sobhan Miah and others.	340 0 0	.. Cess— 7 10 0 160 6 0	152 12 0
				Tauzi No. 2704, khatian No. 10, hissa 15 gds. 1 c. 1 kt. 7 til.	Baikantha Chandra Sarkar.	181 4 0	.. Cess— 4 1 0 49 1 0	45 0 0
				Tauzi No. 2704, khatian No. 11, hissa 10 gandas.	Abinash Chandra Bhoumic.	124 2 0	.. Cess— 2 12 6 33 12 6	31 0 0

Tauzi number.	Name of taluk and pargana.	Sadar jama of whole tenure.	Whether the whole tenure is to be sold.	If only a share is to be sold, specification of such share or shares.	Names of proprietors of property to be be sold.	If only a share is to be sold, the sadar jama of such share.	If the whole tenure is to be sold, the arrears due from it.	If only a share is to be sold, the arrears due from it.
1	2	3	4	5	6	7	8	9
		Rs. a. p.				Rs. a. p.	Rs. a. p.	Rs. a. p.
				Tauzi No. 2704, khatian No. 13, jote No. 8.	Hari Charan Das ..	82 5 0	..	27 7 0 Cess— 1 13 6 29 4 6
				Tauzi No. 2704, khatian No. 14, jote No. 9.	Chandi Charan Roy	74 0 0	..	24 11 0 Cess— 2 1 0 26 12 0
				Tauzi No. 2704, khatian No. 15, jote No. 10.	Dina Nath Dhar	61 1 0	..	20 6 0 Cess— 1 5 9 21 11 9
				Tauzi No. 2704, khatian No. 16, jote No. 11.	Nabin Chandra Sarma	61 10 0	..	19 9 6 Cess— 1 6 0 20 15 6
				Tauzi No. 2704, khatian No. 17, jote No. 12.	Jagat Chandra Datta	54 1 0	..	27 1 0 Cess— 1 3 3 28 4 3
				Tauzi No. 2704, khatian No. 22, jote No. 17.	Chandra Basini Dhar	30 1 0	..	15 1 0 Cess— 0 10 0 15 11 0
				Tauzi No. 2704, khatian No. 23, jote No. 18.	Nabin Chandra De	27 10 0	..	13 13 0 Cess— 0 10 3 14 7 3
				Tauzi No. 2704, khatian No. 25, jote No. 20.	Radha Charan Bhoumic	30 4 0	..	15 2 0 Cess— 0 10 9 15 12 9
				Tauzi No. 2704, khatian No. 31, jote No. 26.	Tirth Basi Debya	27 15 0	..	13 15 0 Cess— 0 11 0 14 10 0
				Tauzi No. 2704, khatian No. 36, jote No. 31.	Radha Charan Bhoumic	14 3 0	..	7 1 0 Cess— 0 5 0 7 6 0
				Tauzi No 2704, khatian No. 43, jote No. 38. All other shares than that specified will be excluded from the sale.	Hari Charan Sil	9 1 0	..	4 8 0 Cess— 0 3 0 4 11 0
2706	Mauza Gangerkut, pargana Bardakhat	1,355 12 0	Whole	....	Raj Kumar Roy Choudhury, common manager on behalf of Trailokya Nath Roy Choudhury and others.	..	535 13 9 Cess— 25 12 0 561 9 9	..
2712	Joar Kadair Patni taluq Krisna Ch. Roy, pargana Bardakhat.	2,603 0 0	Do. ..	....	Srimati Kanak Lata Naha.	..	651 0 0 Cess— 33 0 0 684 0 0	..
2713	Mauza Char Lalpur, pargana Bardakhat.	1,518 6 0	Do. ..	....	Bharat Chandra Roy Choudhury and others.	..	725 0 9 Cess— 23 0 0 748 0 9	..
2714	Joar Maheshpur, pargana Bardakhat.	1,265 4 0	Do. ..	....	Jamini Mohan Choudhury and others.	..	316 5 0 Cess— 17 10 0 333 15 0	..
2719	Taluq Akbar Hossain, pargana Bardakhat	607 0 0	Do. ..	....	Mahendra Chandra Saha and others.	..	152 0 0 Cess— 8 0 0 160 0 0	..
2723	Taluq Mahajan Sarif, pargana Bardakhat.	591 15 0	Do. ..	....	Nowab Serajul Islam Khan Bahadur and others.	..	148 0 0 Cess— 7 11 0 155 11 0	..
2730	Joar Dighirpar, pargana Bardakhat.	6,608 13 0	Do. ..	....	Raj Kumar Roy Choudhury, common manager, on behalf of Sarada Sundari Choudhurany and others.	..	2,984 14 0 Cess— 80 0 0 3,064 14	..

This notice is issued in respect of instalments of revenue due on or before the 30th Agrahayan, 1341 B.S., of which the latest date of payment was 12th January 1935 A. D.

Comilla, the 22nd February 1935.

A. HYE, Addl. Collector.

Notification A.

NOTICE is hereby given, under sections 6 and 13, Act XI of 1859, that the under-mentioned estates and shares of estates in the district of Nadia will be put up to sale at the office of the Collector of that district on the 25th day of March 1935, at 12 noon, for arrears of revenue and other demands which by law are realizable as arrears of land revenue.

When in columns 5, 7 and 9 of the following statement it is stated that only a share is to be sold, it is to be understood that a separate account is kept for that share :—

Tauzi No.	Name of mahal and pargana.	Sadar jama of whole estate.	Whether the whole estate is to be sold.	If only a share is to be sold, specification of such share or shares.	Names of proprietors of property to be sold.	If only a share is to be sold, the sadar jama of such share.	If the whole estate is to be sold, the arrears due from it.	If only a share is to be sold, the arrears due from it.
1	2	3	4	5	6	7	8	9
		Rs. a. p.				Rs. a. p.	Rs. a. p.	Rs. a. p.
17	Alfa, pargana Bagwan.	..	No ..	S. A. No. 1—2 as. 13 gds. 1 c. 2 kr.	Sachindra Nath Singha Roy.	1,445 0 11	..	357 0 0
				S. A. No. 2—19 gds. 2c.1kr.12tils.	Sm. Prafulla Bala Dasi	531 15 11	..	132 3 11
				S. A. No. 6—9 gds. 3 c. 13 tils.	Sachindra Nath Singha Roy.	267 14 10	..	66 2 11
				S. A. No. 22—15 gds. 2 c. 1 kr. 2 tils.	Jatindra Nath Khan	422 6 9	..	279 0 0
				S. A. No. 23—15 gds. 2 c. 1 kr. 2 tils.	Satyendra Nath Khan	422 8 0	..	279 0 0
				All other shares besides that specified above shall be excluded from the sale.				
22	Belgaon, pargana Belgaon.	..	No ..	S. A. No. 1—1 a. 2 c. 2 kr. 3 tils.	Girindra Nath Saha and others.	391 0 8	..	279 2 10
				S. A. No. 2—3 as. 5 gds. 3 c. 2 kr.	Kanai Lal Singha Roy and another.	1,247 3 4	..	901 4 0
				S. A. No. 6—13 gds. 2 c. 1 kr. 16 tils.	Kshetra Nath Paul Chowdhury and others.	260 11 7	..	45 9 11
				S. A. No. 9—1 a. 18 gds. 1 kr. 10 tils.	Nrisingha Prasad Paul Chowdhury and others.	721 10 4	..	189 6 6
				S. A. No. 13—19 gds. 3 c. 2 kr. 4 tils.	Phani Bhushan Paul and another.	377 4 0	..	269 5 0
				S. A. No. 15—17 gds. 1 kr. 3 tils.	Pravash Chandra Ganguli.	323 6 0	..	230 13 6
				All other shares besides that specified above shall be excluded from the sale.				
32	Baleswarpur, pargana Sahauzial.	638 2 0	Whole ..	....	Ashumani Debi ..	..	183 0 0	..
40	Betai, pargana Betai.	..	No ..	S. A. No. 3—1 a. 6 gds. 2 c. 2 kr.	Panchanan Banerjee and others.	733 12 6	..	262 7 10
				S. A. No. 9—1 a. 3 gds. 1 c. 1 kr.	Lalit Mohan Mazumdar and another.	642 1 0	..	307 0 0
				All other shares besides that specified above shall be excluded from the sale.				
59	Barulpara, pargana Rajpur.	..	No ..	S. A. No. 1—2 as. 1 gd. 1 c. 2 kr. 16 tils.	Gour Krishna Sen and others.	976 2 0	..	250 15 6
				S. A. No. 2—3 as. 11 gds. 1 kr. 5 tils.	Anuttam Sen and others.	1,673 5 8	..	430 6 9
				All other shares besides that specified above shall be excluded from the sale.				
61	Bali, pargana Plassey.	..	No ..	S. A. No. 2—3 as. 4 gds.	Triguna Prasad Paul Chowdhuri and others.	1,126 3 11	..	200 10 11
				All other shares besides that specified above shall be excluded from the sale.				
150	Dogachhi, pargana Betai.	..	No ..	S. A. No. 0—11 annas	Anath Bandhu Sarkar and others.	2,764 9 0	..	128 13 2
				All other shares besides that specified above shall be excluded from the sale.				
152	Dariapur, pargana Bagwan.	..	No ..	S. A. No. 0—3 as. 4 gds.	Kshetra Nath Paul Chowdhury and others.	549 2 3	..	142 5 9
				S. A. No. 2—2 as. 16 gds. 3 c. 1 kr. 14 tils.	Ditto ..	488 2 3	..	126 9 9
				All other shares besides that specified above shall be excluded from the sale.				

Tauzi No.	Name of mahal and pargana.	Sadar jama of whole estate.	Whether the whole estate is to be sold.	If only a share is to be sold, specification of such share or shares.	Names of proprietors of property to be sold.	If only a share is to be sold, the sadar jama of such share.	If the whole estate is to be sold, the arrears due from it.	If only a share is to be sold, the arrears due from it.
1	2	3	4	5	6	7	8	9
		Rs. a. p.				Rs. a. p.	Rs. a. p.	Rs. a. p.
157	Dhoradah, pargana Taragunia.	..	No ..	S. A. No. 0—1 a. 6 gds. 2 c. 2 kr.	Bibhuti Bhushan Ganguli and others.	78 8 5	..	12 6 0
				S. A. No. 1—4 as. 13 gds. 1 c. 1 kr.	Kali Kumar Saha ..	274 14 4	..	35 8 3
				S. A. No. 3—5 as. 6 gds. 2 c. 2 kr.	Gopal Chandra Ganguli	314 2 7	..	98 4 4
				S. A. No. 4—6 gds. 2 c. 2 kr.	Kali Kumar Saha and others.	19 10 2	..	5 15 6
				S. A. No. 7—1 a. 5 gds.	Kali Kumar Saha ..	73 9 11	..	22 4 2
				S. A. No. 9—2 gds. 2 kr. 13 tils.	Ditto ..	6 8 9	..	3 15 0
				S. A. No. 10—11 gds. 1 kr. 7 tils.	Ditto ..	32 11 8	..	10 12 0
				S. A. No. 11—15 gandas.	Ditto ..	44 3 0	..	13 5 9
				All other shares besides that specified above shall be excluded from the sale.				
161	Debagram, pargana Khosalpur.	..	No ..	S. A. No. 0—8 annas	Girindra Nath Saha and others.	428 7 4	..	175 0 0
				S. A. No. 1—8 annas	Ditto ..	434 11 5	..	175 0 0
				All other shares besides that specified above shall be excluded from the sale.				
235	Hossainpur, pargana Goash.	..	No ..	S. A. No. 2—8 annas	Gobinda Mohini Chowdhurani.	501 2 10	..	232 8 0
				All other shares besides that specified above shall be excluded from the sale.				
238	Ditto ..	1,002 5 9	Whole ..	....	Durgesh Nandini Biswas and another.	..	464 0 0	..
239	Ditto ..	..	No ..	S. A. No. 0—6 annas	Fatik Chandra Sihi and another.	187 15 1	..	77 0 0
				S. A. No. 1—10 annas	Panchanan Roy ..	313 3 9	..	155 0 0
				All other shares besides that specified above shall be excluded from the sale.				
243	Hatisala, pargana Bagwan.	..	No ..	S. A. No. 0—3 as. 2 gds. 3 c. 7 tils.	Sarba Ranjan Paul Chowdhury and others.	1,860 5 3	..	847 11 6
				S. A. No. 1—2 as. 13 gds. 1 c. 1 kr.	Sachindra Nath Singha Roy.	1,580 6 5	..	1,107 0 0
				S. A. No. 2—1 anna ..	Prafulla Bala Dasi	592 10 4	..	159 0 0
				S. A. No. 4—5 as. 6 gds. 2 c. 2 kr.	Nafar Chandra Paul Chowdhury. ..	3,160 12 9	..	837 5 4
				S. A. No. 7—10 gds. 2 c. 2 kr.	Sachindra Nath Singha Roy.	316 1 3	..	221 0 0
				All other shares besides that specified above shall be excluded from the sale.				
327	Mrigi Bahadurpur, pargana Rajpur.	698 11 2	Whole ..	....	Prio Krishna Mazumdar and others.	..	159 0 0	..
336	Munshibpur, pargana Munshibpur.	..	No ..	S. A. No. 5—1 a. 1 gd. 1 c. 1 kr.	Sarba Ranjan Paul Chowdhury and others.	410 14 6	..	86 14 0
				S. A. No. 8—1 a. 1 gd. 1 c 1 kr.	Satyendra Nath Khan	410 14 6	..	86 14 0
				All other shares besides that specified above shall be excluded from the sale.				
369	Nischintapur, pargana Zahangirabad.	..	No ..	S. A. No. 0—5 as. 12 gds. 2 c. 2 kr. 7 tils.	Pramatha Bhushan Paul Chowdhury and others.	498 4 9	..	87 8 9
				S. A. No. 4—2 as. 7 gds. 1 c. 12 tils.	Sarba Ranjan Paul Chowdhury and others.	209 1 10	..	77 14 3
				All other shares besides that specified above shall be excluded from the sale.				

Tauzi No.	Name of mahal and pargana.	Sadar jama of whole estate.	Whether the whole estate is to be sold.	If only a share is to be sold, specification of such share or shares.	Names of proprietors of property to be sold.	If only a share is to be sold, the sadar jama of such share.	If the whole estate is to be sold, the arrears due from it.	If only a share is to be sold, the arrears due from it.
1	2	3	4	5	6	7	8	9
		Rs. a. p.				Rs. a. p.	Rs. a. p.	Rs. a. p.
370	Nagarbanka, pargana Nagarbanka.	..	No	S. A. No. 2—2 as. 1 gd. 3 c.	Surendra Nath Ghosh	918 6 0	..	200 9 0
				S. A. No. 4—2 as. 1 gd. 8 c.	Prafulla Kumar Bose and others.	918 6 0	..	672 5 10
				All other shares besides that specified above shall be excluded from the sale.				
371	Nakashipara, pargana Bagwan.	..	No	S. A. No. 1—2 as. 13 gds. 1 c. 1 kr.	Shibendra Nath Singha Roy.	1,007 4 6	..	584 12 11
				S. A. No. 2—1 anna	Nrisingha Chandra Paul Chowdhury and others.	377 11 8	..	75 15 8
				S. A. No. 3—1 a. 13 gds. 1 c. 1 kr.	Shibendra Nath Singha Roy.	629 9 0	..	366 14 0
				S. A. No. 4—10 gds. 2 c. 2 kr.	Sarba Ranjan Paul Chowdhury and others.	201 3 0	..	43 11 4
				S. A. No. 5—8 as. 11 gds. 2 kr. 8 tils.	Shibendra Nath Singha Roy.	3,233 10 0	..	1,877 11 8
				All other shares besides that specified above shall be excluded from the sale.				
399	Ukhra, pargana Ukhra.	..	No	S. A. No. 1—8 gds. 3 c. 1 kr. 16 tils.	Gourgunananda Thakur and others.	1,709 14 3	..	10 1 0
				S. A. No. 2—8 gds. 3 c. 1 kr. 15 tils.	Hrishikesh Banerjee and others.	1,709 1 6	..	18 1 0
				S. A. No. 15—5 gds. 2 c. 2 kr. 18 tils.	Ashutosh Halder and others.	1,104 13 11	..	139 9 11
				S. A. No. 24—1 c. 2 kr. 19 tils.	Dilwar Hossain Biswas and others.	127 6 11	..	13 0 4
				All other shares besides that specified above shall be excluded from the sale.				
400	Uthali, pargana Sahauzial.	..	No ..	S. A. No. 0—12 annas.	Jatindra Nath Basu	533 4 7	..	280 12 8
				All other shares besides that specified above shall be excluded from the sale.				
423	Pirpur, pargana Munshibpur.	..	No ..	S. A. No. 4—3 as. 1 gd. 2 c. 2 kr. 13 tils.	Kanai Lal Singha Roy and another.	861 1 9	..	180 0 0
				S. A. No. 5—3 as. 14 gds. 1 c. 1 kr. 1 til.	Sarba Ranjan Paul Chowdhury and others.	1,035 11 1	..	62 7 0
				All other shares besides that specified above shall be excluded from the sale.				
467	Sumirdiar, pargana Sahauzial.	..	No ..	S. A. No. 0—11 as. 4 gds. 2 c. 1 kr.	Mozaharali Joadder and others.	614 11 5	..	140 5 3
				All other shares besides that specified above shall be excluded from the sale.				
468	Shyamnagar, pargana Arsha.	..	No ..	S. A. No. 1—5 as. 12 gds. 2 c.	Mohan Krishna Sen and others.	1,034 12 9	..	432 1 6
				All other shares besides that specified above shall be excluded from the sale.				
470	Senpur, pargana Belgaon.	1,262 10 4	Whole	....	Kanai Lal Singha Roy and another.	..	320 15 11	..
472	Sonapur, pargana Bagwan.	..	No ..	S. A. No. 2—1 a. 1 gd. 1 c. 1 kr.	Manindra Nath Chatterjee and others.	211 4 1	..	49 9 7
				S. A. No. 3—1 a. 11 gds. 3 c. 2 kr. 10 tils.	Bidhu Bhushan Samaddar and others.	422 8 2	..	99 3 2
				S. A. No. 4—4 gandas.	Nani Mohan Brahma	79 3 6	..	9 4 9
				S. A. No. 11—1 a. 7 gds. 1 c. 2 kr. 14 tils.	Bidhu Bhushan Samaddar and others.	126 12 1	..	14 13 11
				S. A. No. 15—1 a. 1 gd. 1 c. 1 kr.	Karuna Nidan Brahma and others.	211 4 1	..	9 3 11
				All other shares besides that specified above shall be excluded from the sale.				
480	Sundalpur, pargana Goash.	1,578 5 11	Whole	....	Girindra Nath Roy and others.	..	756 0 0	..
488	Sankar Chandra, pargana Sahauzial.	..	No ..	S. A. No. 1/1—3 gds. 10 tils.	Radhika Nath Biswas and another.	103 7 6	..	44 0 0
				S. A. No. 10—1 a. 6 gds. 2 c. 1 kr. 2 tils.	Nagendra Nath Banerjee and others.	903 11 1	..	349 1 0
				All other shares besides that specified above shall be excluded from the sale.				

Tauzi No.	Name of mahal and pargana.	Sadar jama of whole estate.	Whether the whole estate is to be sold.	If only a share is to be sold, specification of such share or shares.	Names of proprietors of property to be sold.	If only a share is to be sold, the sadar jama of such share.	If the whole estate is to be sold, the arrears due from it.	If only a share is to be sold, the arrears due from it.
1	2	3	4	5	6	7	8	9
		Rs. a. p.				Rs. a. p.	Rs. a. p.	Rs. a. p.
491	Sadipur, pargana Rajpur.	..	No ..	S. A. No. 2—2 annas..	Bhujendra Nath Biswas and others.	2,282 15 10	..	557 4 5
				S. A. No. 3—2 annas	Ditto ..	2,282 15 10	..	555 11 7
				S. A. No. 5—1 anna	Mahendra Nath Kundu and another.	1,141 7 11	..	278 4 0
				All other shares besides that specified above shall be excluded from the sale.				
535	Thakurpur (Munshibpur), pargana Munshibpur.	..	No ..	S. A. No. 0—8 annas.	Nafar Chandra Paul Chowdhury.	550 7 4	..	134 0 0
				All other shares besides that specified above shall be excluded from the sale.				
834	Meadi Mahal Char Durlavpur, pargana Gosah.	597 0 0	Whole ..	....	Girindra Nath Roy and others.	..	149 0 0	..
840	Char Kaipal, pargana Sahauzial.	..	No ..	S. A. No. 0—8 as. 10 gds.	Jogendra Kumar Bhowmick and others.	922 12 6	..	85 15 3
				All other shares besides that specified above shall be excluded from the sale.				
867	Char Manikdihi, pargana Rajpur.	560 0 0	Whole ..	....	Santosh Kumari Dasi and others.	..	140 0 0	..
870	Char Udai Chandrapur, pargana Bagwan.	5,147 0 0	Do. ..	....	Saroj Ranjan Paul Chowdhury and others.	..	1,286 12 0	..
892	Char Srirampur, pargana Bhanderdah.	590 0 0	Do. ..	....	Ditto ..	..	147 0 0	..
910	Char Gadkhali, pargana Ukhra.	1,342 0 0	Do. ..	....	Hari Pada Mukherjee and another.	..	336 0 0	..
925	Char Muktiarpur, pargana Rajpur.	..	No ..	S. A. No. 0—13 as. 15 gds. 2 c. 13 tils.	Midnapore Zemindary & Co., Ltd., and others.	610 9 5	..	145 8 6
				All other shares besides that specified above shall be excluded from the sale.				
1786	Dighalgram, pargana Ukhra.	3,024 1 7	Whole	....	Amulya Kumar Ganguli and another.	..	632 0 0	..
2414	Hatisala, pargana Char Krishnagar.	2,055 1 10	Do. ..	....	Amala Prasad Mukherjee and others.	..	105 10 8	..
2552	Char Kalidaspur, pargana Sahauzial.	834 0 0	Do ..	....	Debendra Nath Chowdhury and others.	..	209 0 0	..
2767	Char Ramnagar, pargana Dogachi.	2,125 0 0	Do. ..	....	Bhujan Nath Mustafi and others.	..	195 8 0	..
2861	Brithihuda, pargana Bagwan.	564 14 10	Do. ..	....	Chandi Prasad Ganguli and others.	..	140 0 0	..
3541	Ashutosh, pargana Char Krishnagar.	815 1 6	Do. ..	....	Ashutosh Khan ..	..	136 5 4	..
3708	Deara Mahal Char Mahatpur and others, pargana Mahatpur.	610 0 0	Do. ..	....	Hon'ble Maharaja Kshounish Chandra Roy Bahadur.	..	6,252 0 0	..
3709	Char Rulpukur and others, pargana Ukhra.	1,263 0 0	Do. ..	....	Shiba Kumari Debi, executrix to the estate of late Ram Gopal Chetlangia with others.	..	13,578 0 0	..
3713	Deara Mahal Char Krishnachandrapur, pargana Ukhra.	725 0 0	Do. ..	....	Hon'ble Maharaja Kshounish Chandra Roy Bahadur.	..	7,431 0 0	..

This notice is issued in respect of instalments of revenue which were due on or before the 30th Agrahayan, 1341 B.S., of which the latest date of payment was on the 12th day of January 1935.

Nadia, Krishnagar, the 21st February 1935.

[ILLEGIBLE], *for* Collector.

Notification A.

NOTICE is hereby given, under sections 6 and 13, Act XI of 1859, that the undermentioned estates and shares of estates in the district of Bogra will be put up for sale at the office of the Collector of that district on the 25th March 1935, at 12 noon, for arrears of revenue and other demands which by law are realizable as arrears of land revenue.

When in columns 5, 7 and 9 of the following statement it is stated that only a share is to be sold, it is to be understood that a separate account is kept for that share :—

Tauzi No.	Name of mahal and pargana.	Sadar jama of whole estate.	Whether the whole estate is to be sold.	If only a share is to be sold, specification of such share or shares.	Names of proprietors of property to be sold.	If only a share is to be sold, the sadar jama of such share.	If the whole estate is to be sold, the arrears due from it.	If only a share is to be sold, the arrears due from it.
1	2	3	4	5	6	7	8	9
		Rs. a. p.				Rs. a. p.	Rs. a. p.	Rs. a. p.
1, S. A. 2.	K. P. Shelbarsha, pargana Shelbarsha.	14,066 8 0	No ..	1 anna share of Hukmapur and others, police-station Bogra, Barabelgharia and others, police-station Shibganj, Talkhur, police-station Khetlal, Kalai and others, police-station Kahaloo, Porapara and others, police-station Dupchanchia, Binahali and others, police-station Adamdighi, Madangari, Lakshmikole and others, police-station Sherpur, Harisona and others, police-station Taras (Pabna), Andhasura and others, police-station Singra (Rajshahi), Balabari, police-station Panchupur (Rajshahi). All other shares than that specified will be excluded from sale.	Khaja Najmual Hoque.	880 15 1	..	323 8 5
2, Residuary.	Ditto ..	12,849 15 0	No ..	6 as. 6g. 2k. 2kt. of Joydebpur and others, police-station Adamdighi, Ashokola and others, police-station Bogra, Harisona and others, police-station Taras (Pabna), Paranpur and others, police-station Dupchanchia, Alokchhatra and others, police-station Kahaloo, Tunipara and others, police-station Sherpur, Chhatua and another, police-station Shibganj, Talkhur, police-station Khetlal Balabari, police-station Panchupur (Rajshahi), Andhasura, police-station Singra (Rajshahi). 2as. 12g. 1k. 10til of Sarabdipur, police-station Dupchanchia. 8as. 13g. 1k. 1kt. of Bhadaikandi and others, police-station Bogra. 5as. 18g. 3k. of Garohati, police-station Adamdighi, Kelunja and others, police-station Shibganj, Durgapur and others, police-station Bogra, Porapara, police-station Dupchanchia, Isabpur and another, police-station Kahaloo. 3as. 14g. 1kt. 8til of Palimoheshpur and others, police-station Dupchanchia. 11 annas share of Matihas and others, police-station Kahaloo, Kaigari, police-station Bogra. 3as. 3g. 1k. 1kt. of Damai and others, police-station Kahaloo. 5 annas of Bagulahar and others, police-station Bogra, Maligachha and others, police-station Kahaloo. 12as. 3k. 1kt. of Silimpur and another, police-station Bogra. 7as. 15g. of Sakpala, police-station Bogra, Mahishmara, police-station Kahaloo, Chandmua Haripur and another, police-station Bogra.	Shah Md. Khalil Uddin Haider Abu Jober.	4,450 9 2	..	1,748 12 1

Tauzi No.	Name of mahal and pargana.	Sadar jama of whole estate.	Whether the whole estate is to be sold.	If only a share is to be sold, specification of such share or shares.	Names of proprietors of property to be sold.	If only a share is to be sold, the sadar jama of such share.	If the whole estate is to be sold, the arrears due from it.	If only a share is to be sold, the arrears due from it.
1	2	3	4	5	6	7	8	9
		Rs. a. p.		5as. 3g. 1k. 1kt. of Phulbari and others, police-station Bogra 6as 18g. 3til of Sutrapur, police-station Bogra. 2as. 12g. 1k. 10til of Maharajni, police-station Kahaloo, Khandakhetra, police-station Bogra. 6as. 0g. 2k. 2kt. of Sabrul, police-station Bogra. 7as. 3g. 3k. of Sujabad and others, police-station Bogra. 7as. 13g. 3k. of Nishindara, police-station Bogra. 5as. 0g. 2k. 2kt. 6til of Chakbrindaban and others, police-station Bogra. All other shares than that specified will be excluded from sale.		Rs. a. p.	Rs. a. p.	Rs. a. p.
2, S. A. 9.	K. P. Shelbarsha, pargana Shelbarsha.	12,849 15 0	No ..	16 annas of Katnahar, police-station Kahaloo. 8 annas of Damai and others, police-station Kahaloo. All other shares than that specified will be excluded from sale.	Syed Abdur Rub Choudhury.	138 13 9	..	52 4 3
2, S. A. 38.	Ditto ..	12,849 15 0	No ..	16 annas of Sikar, police-station Kahaloo. All other shares than that specified will be excluded from sale.	Kumud Nath Choudhury.	43 12 4	..	16 6 9
2, S. A. 103.	Ditto ..	12,849 15 0	No ..	1a. 8g. 1k. 1kt. of Khanpur and others, police-station Dupchanchia, Joydebpur, police-station Adamdighi, Parishesh and others, police-station Kahaloo. 8as. 8g. 1k. 1kt. of Dastika and others, police-station Bogra. All other shares than that specified will be excluded from sale.	Radharani Dashya Choudhurani.	593 5 3	..	222 14 9
					Total ..	5,316 8 6	..	2,040 5 10
13, Residuary.	Taraf Behar, pargana Shelbarsha.	6,519 8 0	No ..	17g. 1k. 2kt. 11til of Chingashpur and others, police-station Bogra, Borta and others, police-station Kahaloo, Bishgharia, police-station Panchupur (Rajshahi), Panaratika and another, police-station Shibganj. 8g. 2k. 2kt. 16til of Sabla, police-station Dupchanchia, Protappur and others, police-station Kahaloo, Tengra and others, police-station Bogra, Sehali and others, police-station Shibganj. 1a. 7g. 3k. of Lohajal, police-station Kahaloo. 17g. 1k. 2kt. 9til of Kazipara, police-station Kahaloo. 17g 1k. 2kt. 8til of Khajlal, police-station Kahaloo. All other shares than that specified will be excluded from sale.	Radhika Mohan Munshi and others.	148 4 10	..	52 13 9
13, S. A. 10.	Ditto ..	6,519 8 0	No ..	16 g. 1 kt. 14 til of Chingashpur and others, police-station Bogra, Borta, police-station Kahaloo, Panaratika and another, police-station Shibganj, Bishgharia, police-station Panchupur (Rajshahi). 16 g. 2 kt. 19 til of Abilamba and others police-station Kahaloo.	Jamela Khatun Bibi and others.	137 6 7	..	51 0 1

Tauzi No.	Name of mahal and pargana.	Sadar jama of whole estate.	Whether the whole estate is to be sold.	If only a share is to be sold, specification of such share or shares.	Names of proprietors of property to be sold.	If only a share is to be sold, the sadar jama of such share.	If the whole estate is to be sold, the arrears due from it.	If only a share is to be sold, the arrears due from it.
1	2	3	4	5	6	7	8	9
		Rs. a. p.		8 g. 17 til of Sabla, police-station Dupchanchia, Protappur and others, police-station Kahaloo, Tengra and others, police-station Bogra, Sehali and others, police-station Shibganj. 3 g. 2 k. of Pilkhunja, police-station Kahaloo. All other shares than that specified will be excluded from sale.		Rs. a. p.	Rs. a. p.
13, S. A. 11.	Taraf Behar, pargana Sheibarsha.	6,519 8 0	No ..	1 a. 14 g. 3k. 2 kt. 17 til of Chingashpur and others, police-station Bogra, Borta, police-station Kahaloo, Panaratika and another, police-station Shibganj, Bishgharia, police-station Panchupur (Rajshahi). 1 a. 14 g. 3 k. 1 kt. 16 til of Abilamba and others, police-station Kahaloo. 17 g. 1 k. 2 kt. 18 til of Sabla, police-station Dupchanchia, Protappur and others, police-station Kahaloo, Tengra and others, police-station Bogra, Sehali and others, police-station Shibganj. 7 g. 2 k. of Pilkhunja, police-station Kahaloo. All other shares than that specified will be excluded from sale.	Jamela Khatun Bibi and others.	297 13 0	..	110 9 5
					Total ..	588 8 5	..	214 7 8
14, Residuary.	Taraf Paogachha, pargana Sheibarsha.	4,194 7 6	No ..	5 g. 2 k. 1 kt. 10 til of Pirob, police-station Shibganj, Kalyanpur and others, police-station Kahaloo, Titparali, police-station Mahadebpur (Rajshahi), Khehali and others, police-station Dupchanchia, Bantair, police-station Adamdighi.	Jaiban Nessa Bibi.	179 5 3	..	4 7 10
				2 g. 3 k. 15 til of Beltabandighi and others, police-station Khetlal.				
				5 g. 2 k. 1 kt. 10 til of Mirpur and another, police-station Shibganj, Alhali and others, police-station Kahaloo, Dhap and others, police-station Dupchanchia.	Shah Md. Khalil Uddin Haider Abu Jober.			
				7 g. 7 til of Bandalkhara and others, police-station Kahaloo.				
				7 g. 7 til of Khagra and another, police-station Dupchanchia, Birkedar, police-station Kahaloo, Chandimandap, police-station Dupchanchia.	Radharani Dashya			
				2 g. 3 k. 15 til of Atgaon and another, police-station Dupchanchia, Antagari, police-station Adamdighi.				
				18 g. 3 k. of Amira and another, police-station Khetlal.	Gopendra Ballav Priya and others.			
				7 as. 18 g. 3 k. of Allmahamudpur, police-station Adamdighi.				
				2 g. 3 k. 15 til of Hosainnagar, police-station Adamdighi.				
				1 a. 14 g. 7 til of Amira and another, police-station Khetlal.	Asrab Ali and another.			
				7 annas. of Jiapur and another, police-station Khetlal, Nawapara, police-station Mahadevpur (Rajshahi).				
				2 g. 3 k. 15 til of Jiapur and another, police-station Khetlal, Nawapara, police-station Mahadevpur (Rajshahi), Atahar and others, police-station Shibganj.	Faratulla Talukdar and another.			
				All other shares than that specified will be excluded from sale.				

Tauzi No.	Name of mahal and pargana.	Sadar jama of whole estate.	Whether the whole estate is to be sold.	If only a share is to be sold, specification of such share or shares.	Names of proprietors of property to be sold.	If only a share is to be sold, the sadar jama of such share.	If the whole estate is to be sold, the arrears due from it.	If only a share is to be sold, the arrears due from it.
1	2	3	4	5	6	7	8	9
		Rs. a. p.				Rs. a. p.	Rs. a. p.	Rs. a. p.
14, S. A. 29.	Taraf Kahaloo, pargana Shelbarsha.	4,194 7 6	No ..	1 a. 11 g. 3 k. 1 kt. 10 til. of Khehali and others, police-station Dupchanchia, Mahiram, police-station Khetlal. 1 a. 19 g. 3 k. 1 kt. 3 til. of Khagra and others, police-station Dupchanchia, Bandaikhara, police-station Kahaloo, Birkedar, police-station Kahaloo. 15 g. 3 k. 2 kt. 5 til. of Jiapur and another, police-station Khetlal, Nawapara, police-station Mahadevpur (Rajshahi), Atgaon, police-station Dupchanchia, Atahar and others, police-station Shibganj, Chandoni and another, police-station Adamdighi. All other shares than that specified will be excluded from sale.	Md. Mahafujal Hoque Abu Talb *alias* Raja Miah.	294 6 2	..	109 15 5
14, S. A. 35.	Ditto ..	4,194 7 8	No ..	5 as. 2 k. 1 kt. 10 til. of Khehali and another, police-station Dupchanchia. All other shares than that specified will be excluded from sale.	Radharani Dashya Choudhurani.	212 15 9	..	83 8 0
					Total ..	686 11 2	..	197 15 3
43	Taraf Khadash, pargana Shelbarsha.	2,484 1 8	Yes ..	The whole estate will be sold.	Makhan Lal Dutta and others.	..	775 15 1	..
90, Residuary.	Dihi Srikunda, pargana Mohamansahi.	5,777 5 7	No ..	Group A 7 g. 2 k. 2 kt. of Bandighi, police-station Bogra, Panishara and others, police-station Sherpur, Chaksingra and others, police-station Singra (Rajshahi). Group B. 3 as. 3 g. 1 k. 15 til of Kalsimati, police-station Bogra. Group C. 9 as. 5 g. 1 k. of Baraicharabhengri, police-station Taras (Pabna), Ballabhenkur and another, police-station Raiganj (Pabna), Beorapara and others, police-station Sherpur. Group D. Hulhalia, police-station Singra (Rajshahi). All other shares than that specified will be excluded from sale.	Kali Gopal Majumder and others.	1,065 6 3	..	390 3 0
90, S. A. 1.	Ditto ..	5,777 5 7	No ..	2 g. 1 k. of mauzas of Residuary Account of Group A. 1 a. 2 g. 2 k. of mauza of Residuary Account of Group C. 1 g. 1 kt. 10 til of mauzas of Residuary Account of Group D. All other shares than that specified will be excluded from sale.	Pran Kishore Tarafder and another.	101 9 1	..	37 4 8
90 S. A. 3.	Ditto ..	5,777 5 7	No ..	2 g. 1 k. of mauzas as in Residuary Account of Group A. 1 a. 2 g. 2 k. of mauzas as in Residuary Account of Group C. 1 g. 1 kt. 10 til of mauzas as in Residuary Account of Group D. All other shares than that specified will be excluded from sale.	Debendra Kishore Tarafder and others.	101 9 1	..	37 4 9

Tauzi No.	Name of mahal and pargana.	Sadar jama of whole estate.	Whether the whole estate is to be sold.	If only a share is to be sold, specification of such share or shares.	Names of proprietors of property to be sold.	If only a share is to be sold, the sadar jama of such share.	If the whole estate is to be sold, the arrears due from it.	If only a share is to be sold, the arrears due from it.
1	2	3	4	5	6	7	8	9
		Rs. a. p.				Rs. a. p.	Rs. a. p.	Rs. a. p.
90, S. A. 13.	Dihi Srikunda, pargana Mehamansahi.	5,777 5 7	No ..	6 gandas of mauzas as in Residuary Account of Group A. 13 gandas of mauzas as in Residuary Account of Group B. 2 annas of mauzas as in Residuary Account of Group C. 3 gandas of mauzas as in Residuary Account of Group D All other shares than that specified will be excluded from sale.	Syama Kishore Munshi and others.	54 2 7	..	19 14 5
					Total ..	1,822 11 0	..	484 10 10
91, S. A. 1.	Dihi Ulipur, pargana Mehamansahi.	4,385 5 0	No ..	1 a. 2 g. 2 k. of Aman and others, police-station Sherpur Kundais and others, police-station Bogra, Sariabad, police-station Singra (Rajshahi), Bangra, police-station Sherpur. All other shares than that specified will be excluded from sale.	Debendra Kishore Tarafder and others.	238 9 2	..	94 2 10
91, S.A. 2.	Ditto ..	4,385 5 0	No ..	1 a. 2 g. 2 k. of mauzas as in S. A. 1. All other shares than that specified will be excluded from sale.	Pran Kishore Tarafder and another.	238 9 2	..	94 2 6
91, S.A. 3.	Ditto ..	4,385 5 0	No ..	13 g. 1 k. 1 kt. of mauzas as in S. A. 1. All other shares than that specified will be excluded from sale.	Mohendra Narayan Majumder.	141 6 1	..	55 13 10
91, S.A. 4.	Ditto ..	4,385 5 0	No ..	1 a. 6 g. 2 k. 2 kt. of mauzas as in S. A. 1. All other shares than that specified will be excluded from sale.	Rajendra Lal Majumder.	282 12 3	..	111 12 0
91, S.A. 6.	Ditto ..	4,385 5 0	No ..	13 g. 1 k. 1 kt. of mauzas as in S. A. 1. All other shares than that specified will be excluded from sale.	Mohendra Narayan Majumder.	141 6 1	..	55 13 11
91, S.A. 8.	Ditto ..	4,385 5 0	No ..	1 a. 15 g. of mauzas as in S. A. 1. All other shares than that specified will be excluded from sale.	Profulla Chandra Tarafder and another.	371 1 11	..	146 10 8
91, S.A. 9.	Ditto ..	4,385 5 0	No ..	1 a. 6 g. 2 k. 2 kt. of mauzas as in S. A. 1. All other shares than that specified will be excluded from sale.	Kali Gopal Majumder and others.	282 12 2	..	111 11 11
91, S.A. 15.	Ditto ..	4,385 5 0	No	1 a. 15 g. of Srirampur and others, police-station Sherpur. All other shares than that specified will be excluded from sale.	Srish Chandra Sanyal.	198 7 9	..	43 1 3
					Total ..	1,805 0 7	..	713 5 8
97, Residuary.	Dihi Syedpur, pargana Mehamansahi.	5,327 6 2 Police— 53 5 4	No ..	16 annas of Jamur and others, police-station Sherpur. All other shares than that specified will be excluded from sale.	Kumud Nath Choudhury.	5,304 8 8 Police— 53 1 9	..	1,988 6 10 Police— 14 13 11
100, Residuary.	Dihi Subhagachha, pargana Mehamansahi.	3,590 6 0	No ..	8 annas of Khanpur, police-station Sherpur, Chandipur, police-station Singra (Rajshahi). 2 annas of Subhagachha, police-station Sherpur. 16 annas of Chhanka, police-station Sherpur. All other shares than that specified will be excluded from sale.	Nagendra Nath Sanyal and others.	112 11 3	..	38 14 8

Tauzi No.	Name of mahal and pargana.	Sadar jama of whole estate.	Whether the whole estate is to be sold.	If only a share is to be sold, specification of such share or shares.	Names of proprietors of property to be sold.	If only a share is to be sold, the sadar jama of such share.	If the whole estate is to sold, the arrears due from it.	If only a share is to be sold, the arrears due from it.
1	2	3	4	5	6	7	8	9
		Rs. a. p.				Rs. a. p.	Rs. a. p.	Rs. a. p.
100, S.A. 1.	Dihi Subhagachha, pargana Mahamansahi.	3,590 0 0	No ..	9 annas of Helanchapara, police-station Bogra, Baora and others, police-station Sherpur, Khodadpur and another, police-station Raiganj (Pabna). 4 annas of Subhagachha, police-station Sherpur. 6 annas of Phukpal, police-station Singra (Rajshahi). All other shares than that specified will be excluded from sale.	Kumud Nath Choudhury.	710 5 0	..	276 6 10
100, S.A. 2.	Ditto ..	3,590 0 0	No ..	1 anna of Helanchapara, police-station Bogra, Baora and another, police-station Sherpur, Banail and another, police-station Sherpur, Khodadpur and another, police-station Raiganj (Pabna). 10 gandas of Subhagachha police-station Sherpur, Khariapukur and others, police-station Singra (Rajshahi). 10 annas of Chhota Banshbaria, police-station Singra (Rajshahi). 13 g. 1 k. 1 kt. of Phukpal, police-station Singra (Rajshahi). All other shares than that specified will be excluded from sale.	Ditto ..	78 14 9	..	30 11 5
100, S.A. 3.	Ditto ..	3,590 0 0	No ..	3 annas of Khariapukur and others, police-station Singra (Rajshahi), Helanchapara, police-station Bogra, Baora and others, police-station Sherpur, Khodadpur and another, police-station Raiganj (Pabna). 1a. 10 g. of Subhagachha, police-station Sherpur. 2 annas of Phukpal, police-station Singra (Rajshahi). All other shares than that specified will be excluded from sale.	Gour Gopal Choudhury and others.	236 12 3	..	92 2 3
100, S.A. 5.	Ditto ..	3,590 0 0	No ..	16 annas of Mamursahi, police-station Sherpur, Gandhail, police-station Singra (Rajshahi). All other shares than that specified will be excluded from sale.	Nripendra Chandra Roy and others.	93 7 3	..	36 12 9
100, S.A. 8.	Dihi Subhagachha, pargana Shelbarsha.	3,590 0 0	No ..	6 as. 5 g. of Katham, police-station Singra (Rajshahi), Helanchapara, police-station Bogra. 1 a. 2 g. 2 k. of Khariapukur and others, police-station Singra (Rajshahi), Baora and others, police-station Sherpur, Khodadpur and another, police-station Raiganj (Pabna). 11 g. 1k. of Subhagachha, police-station Sherpur. 15 gandas of Phukpal, police-station Singra (Rajshahi). All other shares than that specified will be excluded from sale.	Upendra Chandra Choudhury.	206 0 8	..	34 9 6

Tauzi No.	Name of mahal and pargana.	Sadar Jama of whole estate.	Whether the whole estate is to be sold.	If only a share is to be sold, specification of such share or shares	Names of proprietors of property to be sold.	If only a share is to be sold, the sadar Jama of such share.	If the whole estate is to be sold, the arrears due from it.	If only a share is to be sold, the arrears due from it.
1	2	3	4	5	6	7	8	9
		Rs. a. p.				Rs. a. p.	Rs. a. p.	Rs. a. p.
100, S.A. 10.	Dihi Subhagachha, pargana Shelbarsha.	3,590 6 0	No ..	11 g. 1 k. of Khariapukur and others, police-station Singra (Rajshahi), Helanchapara, police-station Bogra, Baora and others, police-station Sherpur, Khodadpur and another, police-station Raiganj (Pabna). 5 g. 2 k. 1 kt. 10 til of Subhagachha, police-station Sherpur. 7 g. 2 k. of Phukpal, police-station Singra (Rajshahi). All other shares than that specified will be excluded from sale.	Mohendra Nath Kundu.	88 12 8	..	33 14 11
100, S.A. 16.	Ditto ..	3,590 6 0	No ..	4 annas of Harini, police-station Singra (Rajshahi). All other shares than that specified will be excluded from sale.	Nirode Bala Debi	29 6 1	..	11 4 3
100, S.A. 19.	Dihi Subhagachha, pargana Mehamansahi.	3,590 6 0	No. ..	3 as. 10 g. of Katham, police-station Singra (Rajshahi), Kaphura, police-station Sherpur, Sadulbari and another, police-station Sherpur, Senganti and another, police-station Raiganj (Pabna). 1 a. 15 g. of Krishnapur, police-station Taras (Pabna), Gilabari and another, police-station Sherpur. 17 g. 2 k. of Darikhaga, police-station Sherpur, Badiason, police-station Singra (Rashahi), Burail, police-station Singra (Rajshahi). 4 annas of Harini, police-station Singra (Rajshahi). 8 g. 3 k. of Subhagachha, police-station Sherpur. All other shares than that specified will be excluded from sale.	Srish Chandra Sanyal.	247 14 1	..	96 9 4
100, S.A. 26.	Ditto ..	3,590 6 0	No. ..	4 annas of Darikhaga, police-station Sherpur, Badiason and another, police-station Singra (Rajshahi). 2 annas of Lakshmikolattar, police-station Raiganj (Pabna). 2 as. 13 g. 1 k. 1 kt. of Phukpal, police-station Singra (Rajshahi). All other shares than that specified will be excluded from sale.	Kumud Nath Sarker.	146 9 1	—	56 9 5
					Total	1,950 13 1	..	707 15 4
103	Dihi Damdighi, pargana Mehamansahi.	512 14 7 Police— 5 5 4	Yes ..	The whole estate will be sold.	Dhirendra Chandra Neogi and others.	..	189 13 11 Police— 1 0 10	..
104, S.A. 1.	Dihi Eksingha, pargana Mehamansahi.	4,026 9 10 Police— 37 5 4	No ..	15 gandas of Birkulia and others, police-station Bogra, Bhadra, police-station Sherpur, Indrason, police-station Singra (Rajshahi), Sakdaha, police-station Dhunot. 1 a. 14 g. 1 k. 8 til of Daikandi, police-station Bogra, Joanpur and others, police-station Sherpur, Salimpur and others, police-station Singra (Rajshahi). 1 a. 3 g. 2 k. 17 til of Barapathar, police-station Bogra. 8 g. 2 k. 16 til of Post, police-station Sherpur. All other shares than that specified will be excluded from sale.	Profulla Chandra Saha Choudhury.	188 12 1 Police— 1 12 0	..	70 7 8 Police— 4 6 7

Tauzi No.	Name of mahal and pargana.	Sadar jama of whole estate.	Whether the whole estate is to be sold.	If only a share is to be sold, specification of such share or shares.	Names of proprietors of property to be sold.	If only a share is to be sold, the sadar jama of such share.	If the whole estate is to be sold, the arrears due from it.	If only a share is to be sold, the arrears due from it.
1	2	3	4	5	6	7	8	9
		Rs. a. p.				Rs. a. p.	Rs. a. p.	Rs. a. p.
100, S.A. 3.	Dihi Eksingha, pargana Mehamansahi.	4,026 9 10 Police— 37 5 4	No ..	2 as. 10 g. of Birkulla, police-station Bogra, Bhadra and others, police-station Sherpur, Indrason, police-station Singra (Rajshahi), Sakdaha, police-station Dhunot. 5 as. 14 g. 1 k. 8 til of Joanpur and others, police-station Sherpur, Salimpur and others, police-station Singra (Rajshahi). 3 as. 18 g. 2 k. 17 til of Barapathar, police-station Bogra. 1 a. 8 g. 2 k. 17 til of Posi, police-station Sherpur. 2 annas of Sherpur, police-station Sherpur. All other shares than that specified will be excluded from sale.	Annapurna Choudhurani.	629 2 6 Police— 5 13 4	..	234 13 3 Police— 11 10 8
104, S. A. 8.	Ditto ..	4,026 9 10 Police— 37 5 4	No ..	1 a. 15 g. of Birkulla, police-station Bogra, Bhadra and others, police-station Sherpur, Indrason, police-station Singra (Rajshahi), Sakdaha, police-station Dhunot. 4 annas of Daikandi, police-station Bogra, Jaonpur and others, police-station Sherpur, Salimpur and others, police-station Singra (Rajshahi). 2 as. 15 g. of Barapathar, police-station Bogra. 1 anna of Posi, police-station Sherpur. All other shares than that specified will be excluded from sale.	Syama Kishore Munshi and others.	440 5 10 Police— 4 1 4	..	164 5 9 Police— 7 0 0
104, S. A. 13.	Ditto ..	4,026 9 10 Police— 37 5 4	No ..	1 a. 10 g. of Raroa and another, police-station Sherpur, Eksingha, police-station Singra (Rajshahi). All other shares than that specified will be excluded from sale.	Nirode Bala Debya.	26 4 7 Police— 0 3 11	..	9 12 10 Police— 0 2 9
104, S. A. 15.	Ditto ..	4,026 9 10 Police— 37 5 4	No ..	3 as. 10 g. of Bihigram and another, police-station Bogra, Kamarghat and another, police-station Sherpur, Narateghari, police-station Taras (Pabna). 1 a. 15 g. of Narila, police-station Bogra, Chakrajib and others, police-station Sherpur. 17 g. 2 k. of Birkulla, police-station Bogra, Bhadra, police-station Sherpur, Indrason, police-station Singra (Rajshahi), Sakdaha, police-station Dhunot. 1 a. 5 g. of Raroa and another, police-station Sherpur. 3 as. 15 g. of Eksingha, police-station Singra (Rajshahi). All other shares than that specified will be excluded from sale.	Srish Chandra Sanyal.	250 12 3 Police— 2 5 2	..	93 9 5 Police— 1 3 5
104, S. A. 17.	Ditto ..	4,026 9 10 Police— 37 5 4	No ..	1 g. 3 k. 2 kt. 5 til of Sakdaha, police-station Dhunot. All other shares than that specified will be excluded from sale.	Brojalal Talukder and another.	3 14 3 Police— 0 0 7	..	1 9 10 Police— 0 0 8
					Total ..	1,539 3 6	..	574 10 4
148, Residuary.	Chaudhurai Chhatingram, pargana Khatta.	603 8 0	No ..	9 as. 4 g. 2 k. of Panchsa and others, police-station Supchanchia, Sonal and others, police-station Adamdighi, Pirojpur and another, police-station Naogaon (Rajshahi). All other shares than that specified will be excluded from sale.	Radhika Mohan Munshi and others.	346 7 6	..	106 10 6

Tauzi No.	Name of mahal and pargana.	Sadar jama of whole estate	Whether the whole estate is to be sold.	If only a share is to be sold, specification of such share or shares.	Names of proprietors of property to be sold.	If only a share is to be sold, the sadar jama of such share.	If the whole estate is to be sold, the arrears due from it.	If only a share is to be sold, the arrears due from it.
1	2	3	4	5	6	7	8	9
		Rs. a. p.				Rs. a. p.	Rs. a. p.	Rs. a. p.
148, S. A. 1.	Chaudhurai Chhatingram, pargana Khatta.	603 8 0	No ..	6 as. 15 g. 2 k. of mauzas as in Residuary Account. All other shares than that specified will be excluded from sale.	Kishori Mohan Sanyal and others.	257 0 6	..	52 6 10
					Total ..	603 8 0	..	159 1 4
176, S. A. 1.	Mauza Baonpur, pargana Apoll.	1,615 4 5	No ..	8 annas of Agra and others, police-station Panchbibi, Pechulia and others, police-station Joypurhat. All other shares than that specified will be excluded from sale.	Surabala Choudhurani.	810 7 2	..	295 15 0
187, Residuary.	Kosba Uchal, pargana Khangoir.	1,018 1 0	No ..	7 as. 9 g. 3 k. 1 kt. 10 til of Ramchandrapur and others, police-station Panchbibi. All other shares than that specified will be excluded from sale.	Provash Chandra Baahak and another.	471 1 0	..	196 6 7
187, S. A. 1.	Ditto ..	1,018 1 0	No ..	4 annas of mauzas as in Residuary Account. All other shares than that specified will be excluded from sale.	Ditto ..	252 13 10	..	101 9 1
					Total ..	723 14 10	..	297 15 8
192, Residuary.	Chhandata, pargana Doyanogor.	1,373 11 8	No ..	4 annas of Taral and another, police-station Bogra, Uttardebakhanda and others, police-station Kahaloo. All other shares than that specified will be excluded from sale.	Janaki Nath Majumder.	343 6 11	..	148 8 0
192, S. A. 2.	Ditto ..	1,373 11 1	No ..	4 annas share of mauzas as in Residuary Account. All other shares than that specified will be excluded from sale.	Atul Krishna Baral.	515 2 4	..	222 12 0
					Total ..	858 9 3	..	371 4 0
209, Residuary.	Dihi Magura, pargana Shibpur.	4,566 14 0	No .	1 a. 15 g. 2 k. 13 til of Kundadeshma and others, police-station Bogra, Abilamba and others, police-station Kahaloo. All other shares than that specified will be excluded from sale.	Bhabani Chandra Talukder and others.	507 6 11	..	167 2 7
209, S. A. 2.	Ditto ..	4,566 14 0	No ..	5 as. 6 g. 2 k. 2 kt. of mauzas as in Residury Account. All other shares than that specified will be excluded from sale.	Upendra Chandra Choudhury.	1,522 4 10	..	167 2 7
209, S. A. 4.	Ditto ..	4,566 14 0	No ..	5 as. 6 g. 2 k. 2 kt. of mauzas as in Residuary Account. All other shares than that specified will be excluded from sale.	Digendra Nath Sarker and others.	1,522 4 9	..	166 13 5
					Total ..	3,552 0 6	..	501 2 7
684, Residuary.	Shekta and others, pargana Khangoir.	648 11 10	No ..	11 as. 10 g. of Shekta and others, police-station Panchbibi. All other shares than that specified will be excluded from sale.	Baram Uddin Choudhury.	466 9 5	..	157 6 6
684, 1. A. 8.	Ditto ..	648 11 10	No ..	2 as. 10 g. of mauza as in Residuary Account. All other sahres than that specified will be excluded from sale.	Baram Uddin Choudhury and another.	101 0 1	..	26 10 6

Tauzi No.	Name of mahal and pargana.	Sadar jama of whole estate.	Whether the whole estate is to be sold.	If only a share is to be sold, specification of such share or shares.	Names of proprietors of property to be sold.	If only a share is to be sold, the sadar jama of such share.	If the whole estate is to be sold, the arrears due from it.	If only a share is to be sold, the arrears due from it.
1	2.	3	4	5	6.	7	8	9
		Rs. a. p.				Rs. a. p.	Rs. a. p.	Rs. a. p.
684, S. A. 4	Shekta and others, pargana Khangoir.	648 11 10	No ..	2 annas of mauza as in Residuary Account. All other shares than that specified will be excluded from sale.	Baram Uddin Choudhury.	81 2 4	..	26 9 6
					Total ..	648 11 10	..	210 10 6
686, S. A. 1.	Thupsara and others, pargana Apoil.	4,390 4 0	No. ..	16 annas of Nadura and others, police-station Shibganj, Kauspur and others, police-station Panchbibi, Kuisahar and others, police-station Joypurhat, Kanchakul and others, police-station Khetlal, Kanchanpur, police-station Panchbibi. 10 as. 13 g. 1 k. 1 kt. of Harunja, police-station Khetlal. All other shares than that specified will be excluded from sale.	Shyamadas Roy Choudhury.	3,011 3 0	..	823 1 7
692, Residuary.	Krishnapur and others, pargana Bindhara.	1,254 6 9	No ..	5 as. 14 g. 2 k. 1 kt. 5 til of Dibakarpur and others, police-station Panchbibi, Koketara Kismat and others, police-station Nawabganj (Dinajpur). All other shares than that specified will be excluded from sale.	Bireswar Chattopadhya, common manager.	449 4 0	..	127 12 3
692, S. A. 1.	Ditto ..	1,254 6 9	No ..	1 a. 12 g. 2 k. of mauzas as in Residuary Account. All other shares than that specified will be excluded from sale.	Bireswar Chattopadhya.	127 6 6	..	35 15 6
692, S. A. 2.	Ditto ..	1,254 6 9	No ..	4 as. 18 g. of mauzas as in Residuary Account. All other shares than that specified will be excluded from sale.	Ditto ..	384 2 8	..	106 11 3
692, S. A. 3.	Ditto ..	1,254 6 9	No ..	2 as. 2 g. 2 k. 1 kt. 5 til of mauzas as in Residuary Account. All other shares than that specified will be excluded from sale.	Ditto ..	167 0 1	..	46 9 0
692, S. A. 4.	Ditto ..	1,254 6 9	No ..	16 g. 1 kt. 15 til of mauzas as in Residuary Account. All other shares than that specified will be excluded from sale.	Ditto ..	63 4 9	..	16 0 0
692, S. A. 5.	Ditto ..	1,254 6 9	No ..	16 g. 1 kt. 15 til of mauzas as in Residuary Account. All other shares than that specified will be excluded from sale.	Ditto ..	63 4 9	..	16 0 0
					Total ..	1,254 6 9	..	249 0 0
911	Provash Chandra Bashak and others, pargana Barbakpur.	502 15 0	Yes ..	The whole estate will be sold.	Provash Chandra Bashak and another.	..	168 15 7	..

This notice is issued in respect of instalments of revenue which were due on or before the 30th Agrahayan, 1341 B.S., of which the latest date of payment was 12th January 1935.

[ILLEGIBLE], *for* Collector.

Bogra, the 25th February 1935.

Notification A.

NOTICE is hereby given, under sections 6 and 13, Act XI of 1859, that the undermentioned estates and shares of estates in the district of 24-Parganas will be put up for sale at the office of the Collector of that district on the 25th March 1935, at 12 noon, for arrears of revenue and other demands which by law are realizable as arrears of land revenue.

When in columns 5, 7 and 9 of the following statement it is stated that only a share is to be sold, it is to be understood that a separate account is kept for that share and all other shares besides that specified will be excluded from the sale :—

Tauzi No.	Name of mahal and pargana.	Sadar jama of the whole estate.	Whether the whole estate is to be sold.	If only a share is to be sold, specification of such share or shares.	Names of proprietors of properties to be sold.	If only a share is to be sold, the sadar jama of such share.	If the whole estate is to be sold, the arrears due from it.	If only a share is to be sold, the arrears due from it.
1	2	3	4	5	6	7	8	9
		Rs. a. p.				Rs a. p.	Rs. a. p.	Rs. a. p.
3-2	Mahal Laskarpur, pargana Magura.	..	..	4 annas share of the entire estate.	Lalkumar Roy Choudhury and others.	2,069 7 4	..	724 4 10
6 R.S.	Mahal Roynagore, pargana Magura.	..	..	16 annas share in all mauzas except Palpara and Jalfarpur.	Akshay Chandra Bose	6,806 12 2	..	1,879 14 9½
8-2	Mahal Jalfia, pargana Magura.	..	..	4 annas share ..	Lal Kumar Roy Chowdhury and others.	867 7 6	..	327 3 1
47-1	Mahal Roypur, pargana Magura.	..	..	16 annas share in each of the mauzas Gangadhar Chak, Brajamari Chak, Chak Ganaing, Nij Andharmanik, Ramjibanpur, jote Sonagachhi, Joynagar, Hata, Sarsuna, Krishnarampur, Champasi Chak, Jagaddal, Bagdandi, Bade Gobindapur, Chetta Gobindapur, Boidyanathpur, Dakhineswar, Andharia, Koyradanga and Rajarampur.	Khagendra Nath Chakrabarty and others.	1,642 9 2	..	315 1 0
56 R.S.	Ditto ..	..	..	5 as. 6 gds. 2 k. 2 kt. share.	Jugol Charan Mondal and others.	1,041 8 2	..	146 2 3½
58	Mahal Bagi, pargana Magura.	1,756 0 6	Whole	....	Kumud Krishna Mondal and others.	..	186 3 4	..
63	Mahal Banshdroni, pargana Magura.	9,058 4 2	Do. ..	....	Satyendra Kumar Sarkar and others.	..	1,285 0 5½	..
67	Mahal Fatehpur, pargana Magura.	1,998 6 0	Do. ..	....	Naba Kishore Mondal and others.	..	178 7 4½	..
97	Mahal Bagi, pargana Magura.	990 10 4	Do. ..	....	Satya Ranjan Mazadar and others.	..	167 13 2½	..
106	Mahal Bagdaha, pargana Magura.	998 1 10½	Do. ..	....	Manindra Nath Banerjee and others.	..	35 7 11½	..
120 R.S.	Mahal Kodalia, pargana Baridhati	..	..	8 annas share ..	Jnanendra Nath Chatterjee and another.	2,543 14 9	..	734 2 4½
120-1	Ditto ..	..	..	8 annas share ..	Nirmal Chandra Banerjee.	2,543 15 9	..	734 2 9
145	Mahal Madarsa Bonhughly, pargana Calcutta.	5,193 14 0	Whole	....	Sm. Nanibala Dasi and others.	..	1,289 15 6½	..
146 R.S.	Mahal Jojra, pargana Anwarpur.	..	..	16 annas share in 185 mauzas.	Dharani Mohan Roy	26,207 1 9	..	16,323 8 9
147 R.S.	Mahal Benota, pargana Calcutta.	..	..	16 annas share in 53 mauzas.	Bhupati Roy Chowdhury and others.	1,828 11 10	..	638 12 0½
172-4	Mahal Gouripur, pargana Calcutta.	..	..	2 as. 2 gds. 2 k. 2 kt. share.	Manik Chandra Banerjee.	1,282 12 11	..	462 12 10
173-3	Mahal Uriapara, pargana Calcutta.	..	..	2 as. 2 gds. 2 k. 2 kt. share.	Ditto ..	1,973 7 8	..	575 9 0½
311	Mahal Ektara, pargana Muragachha.	2,670 0 9	Whole	....	Manujendra Krishna Mitra and another.	..	598 0 0	..
312	Mahal Besingha, pargana Muragachha.	8,701 8 10	Do. ..	....	Abani Nath Mukherjee	..	3,194 6 5½	..
322-1	Mahal Alampur, pargana Muragachha.	..	..	12 annas share in each of the mauzas Keshani, Joypur, Jalghara, Nowapara, Maldanga, Sarishapara, Ramnathpur, Ramnagore, Sanpukuria and Hashri and 6 annas share in each of the mauzas Gopinathpur, Parul, Balarampur, Rajballavpur, Gandabere, Gaja Chandipur, Palli and Baru.	Bejoy Kishore Mondal and others.	1,488 4 5	..	397 6 2

Tauzi No.	Name of mahal and pargana.	Sadar jama of whole estate.	Whether the whole estate is to be sold.	If only a share is to be sold, specification of such share or shares.	Names of proprietors of properties to be sold	If only a share is to be sold, the sadar jama of such share.	If the whole estate is to be sold, the arrears due from it.	If only a share is to be sold, the arrears due from it.
1	2	3	4	5	6	7	8	9
		Rs. a. p.				Rs. a. p.	Rs. a. p.	Rs. a. p.
322-6	Mahal Alampur, parganna Muragachha.	..	..	16 annas share in each of the mauzas Amira, Idia, Kolagachchia, Kamarkuri Joktabla, Nahanus Nabashan, Pattpuri, Bade Amires Bendal, Sukdebpur, Sarisha, Bhushna Bungal Kodalla and Mallik-nagar.	Gopal Lal Banerjee and others.	1,310 0 0	..	349 0 0
335	Mahal Iswaripur, pargana Sahanagore.	6,444 15 0	Whole	....	Atul Chandra Mukherjee and another.	..	1,971 15 3½	..
341	Mahal Raipur, pargana Ghar.	6,677 14 0	Do.	....	Atindra Nath Das and others.	..	1,147 8 9	..
351	Mahal Porul, pargana Balia.	8,626 8 6	Do.	....	Surendra Nath Rai		1,787 15 0	..
352 R. S	Mahal Naya Hazari, pargana Balia.	..	..	3 as. 11 gds. 1 kt. 1 dt. share.	Sailendra Nath Das and another.	1,189 6 0	..	414 13 8
353 R. S.	Mahal Nandanpur, pargana Balia.	..	..	8 annas share	Jugol Charan Mondal and others.	1,602 0 7	..	546 7 10
355	Mahal Raipur, pargana Balia.	2,745 6 0	Whole	..	Bhola Nath Mondal	..	1,427 1 5½	..
381 R. S.	Mahal Alipur, pargana Hatiaghar.	..	..	4 annas share ..	Durga Das Bose ..	2,921 3 7	..	299 4 4
385	Mahal Hudarashkhali, pargana Azimabad.	19,395 7 0	Whole	....	Amarendra Nath Chatterjee and others.	..	6,467 14 4	..
388	Mahal Mayapur, pargana Balia.	8,326 9 0	Do.	....	Kumud Krishna Mandal and others.	..	3,129 2 1	..
389	Mahal Sontoshpur, pargana Balia	9,389 15 0	Do.	....	Naba Krishna Mandal and others.	..	3,829 13 5	..
391	Mahal Gomukhia, pargana Muragacha.	5,538 8 6	Do.	....	Kumud Krishna Mandal and others.	..	1,940 9 7	..
392 R. S.	Mahal Hudajoychandipur, pargana Azimabad.	..	..	1 a. 6 gds. 2 k. 2 kt. share.	Naba Krishna Mandal	692 10 1	..	275 10 0½
392-1	Ditto ..	..	..	4 annas share ..	Ditto ..	2,077 14 0	..	1,081 12 6½
392-3	Ditto ..	..	..	2 as. 13 gds. 1 k. 1 kt. share.	Ditto ..	1,385 4 4	..	719 3 8
392-4	Ditto ..	..	..	1 a. 6 gds. 2 k. 2 kt. share.	Ditto ..	692 10 3	..	275 10 11
392-7	Ditto ..	..	..	2 as. 13 gds. 1 k. 1 kt. share.	Ditto ..	1,385 4 2	..	716 3 1
394	Mahal Kishorepur, pargana Azimabad.	7,108 12 11	Whole	....	Bhola Nath Mandal ..	..	3,191 12 11	..
395 R S	Mahal Mahammadpur, pargana Azimabad.	..	..	3 annas share ..	Hemendra Krishna Singha and others.	2,730 9 11	..	600 7 0
395-3.	Ditto ..	..	..	2 annas share ..	Jotindra Krishna Mandal and others.	1,816 15 8	..	527 3 4
395-5.	Ditto ..	..	..	1 anna share ..	Sm. Gouribala Dasi ..	910 3 6	..	200 1 2
403-R.S.	Mahal Patharberia, pargana Azimabad.	..	..	4as. 12gds. 1k. 2kt. 1dt. share	Kumud Krishna Mandal and others.	1,485 12 8½	..	738 8 0
403-2.	Ditto ..	..	..	6as. 13gds. 1k. kt. share.	Ashutosh Santra and another.	2,142 15 11	..	1,065 8 5
613	Mahal Kathuriya, pargana Balia.	855 13 0	Whole	....	Surendra Nath Banerjee and others.	..	164 10 3	..
643	Mahal Paikan, pargana Amirabad.	560 8 0	Do.	....	Narendra Chandra Bose.	..	138 2 4	..

Tauzi No.	Name of mahal and pargana.	Sadar jama of whole estate.	Whether the whole estate is to be sold.	If only a share is to be sold, specification of such share or shares.	Names of proprietors of properties to be sold.	If only a share is to be sold, the sadar jama of such share.	If the whole estate is to be sold, the arrears due from it.	If only a share is to be sold, the arrears due from it.
1	2	3	4	5	6	7	8	9
		Rs. a. p.				Rs. a. p.	Rs. a. p.	Rs. a. p.
1193 R.S.	Mahal Halisahar, pargana Halisahar.	..	..	16 annas share in each of the mauzas Ahhirampur, Biswanathpur, Gustia, Joy Krishnapur, Jadavpur Tapanpur, Tentulia, Debibati, Nandanbati, Panpur, Kutabpur Mahisbati, Patimani Kandhar, Bijpur, Balibhara, Bargachia Bhabanipur, Mahadevbati, Madrali, Ranabati, Malaypur, Sankarpur, Raghu Devipur, Balarampur, Ratneswarbati, Alampur, Uttarbera Kanpur, Gopalpur, Ghalghalia, Batia or Baria, Birpara, Mathurabati and Krishnanagar.	Balai Chandra Goswami.	7,031 5 6	..	2,188 15 2½
2049-1.	Mahal Katiara, pargana Ukhra.	..	..	8 annas share ..	Kali Das Nandi and others.	2,143 8 2½	..	454 8 10
2068-1.	Mahal Goal Dob, pargana Ukhra.	..	..	7as. 3gds. 3k. share ..	Siba Das Maitra and others.	1,105 4 10	..	228 8 ½
2071	Mahal Hatighata, pargana Ukhra.	620 4 8	Whole	....	Sm. Saralabala Devi	..	126 15 11	..
2149/1	Mahal Kulingram, pargana Ukhra.	..	..	8 annas share ..	Anindra Mohan Banerjee and others.	575 8 7	..	122 15 11
2455 R. S.	Mahal Halisahar, pargana Halisahar.	..	..	10 as. 16 gds. 1 k. 1 kt. 2 263/600 dt. share.	Charu Chandra Bhattacharjee and others.	687 4 10	..	202 14 8½
2456	Mahal Krishnapur, pargana Halisahar.	769 9 8	Whole	....	Sailaja Charan Bhattacharjee and others.	..	309 7 7	..
3040	Mahal Amirpur, pargana Amirpur.	2,907 2 9	Do. ..	....	Sm. Saralabala Devi	..	1,140 3 10	..
1370	Mahal Lot No. 101 Mahmudpur Abad, pargana Sundarbans.	5,510 0 0	Do. ..	....	Ahidhar Ghosh and others.	..	6,254 4 6	..
1441 R. S.	Mahal Lot Nos. 30, 32 and 33 Sundarbans, pargana Sundarbans.	..	..	11 as. 14 gds. 2 k. 2 kt. 3 tils shares.	Girindra Krishna Bose and others.	10,212 13 0	..	161 3 9½
1442 R. S.	Mahal Lot No. 22, pargana Sundarbans.	..	..	3 as. 8 gds. 2 k. 16 tils share.	Harendra Krishna Bose and others.	1,406 12 4	..	171 3 0
1486	Mahal Lot No. 64, pargana Sundarbans.	935 0 0	Whole	....	Bhudeb Nath Agasti and others.	..	234 0 0	..
1487 R. S.	Ditto ..	..	..	12 as. 10 gds. share ..	Bhuban Mohan Roy Chaudhury and others.	796 14 0	..	398 7 0
1491	Mahal Lot No. 61, pargana Sundarbans.	3,734 0 0	Whole	....	Charu Chandra Ghosh and another.	..	934 0 0	..
2711	Mahal western part of Lot No. 36, pargana Sundarbans.	2,557 0 0	Do. ..	....	Khirode Chandra Mandal and others.	..	153 8 0	..
2721 R. S.	Mahal north-western part of Lot No. 16, pargana Sundarbans.	..	..	8 annas share ..	Bijoy Krishna Chakravarty and others.	1,838 8 0	..	229 0 0
2721/1.	Ditto ..	..	..	8 annas share ..	Annada Prosad Mitra	1,838 8 0	..	229 0 0
2733	Mahal middle part of Lot No. 138, pargana Sundarbans.	5,925 0 0	Whole	....	Sushil Kumar Roy Choudhury.	..	1,388 0 0	..
2843	Mahal Lot No. 16, 3rd portion, pargana Sundarbans.	1,492 0 0	Do. ..	....	Sadhan Kumar Bose and others.	..	298 0 0	..
2901	Mahal E Plot, 5th portion, pargana Sundarbans.	669 0 0	Do. ..	....	Sudhir Chandra Jana and others.	..	134 0 0	..
2902	Mahal E Plot, 7th portion, pargana Sundarbans.	986 0 0	Do. ..	....	Sm. Baroda Kumari Dasi.	..	197 0 0	..

Tauzi No.	Name of mahal and pargana.	Sadar jama of whole estate.	Whether the whole estate is to be sold.	If only a share is to be sold, specification of such share or shares.	Names of proprietors of properties to be sold.	If only a share is to be sold, the sadar jama of such share.	If the whole estate is to be sold, the arrears due from it.	If only a share is to be sold, the arrears due from it.
1	2	3	4	5	6	7	8	9
		Rs. a. p.				Rs. a. p.	Rs. a. p	Rs. a. p.
2936	Mahal Lot No. 122, 2nd portion, pargana Sundarbans.	783 0 0	Whole	....	Chandi Charan Laha	..	157 0 0	..
2925	Mahal E Plot, 1st portion, pargana Sundarbans.	1,094 0 0	Do. ..	....	Bhupendra Nath Jana and another.	..	219 0 0	..
2946	Mahal Lot No. 140, 2nd portion, pargana Sundarbans.	1,103 0 0	Do. ..	....	Sm. Mrinalini Palit and another.	..	221 0 0	..
2954	Mahal C Plot, 2nd portion, pargana Sundarbans.	1,035 0 0	Do. ..	....	Sudhir Chandra Jana and others.	..	207 0 0	
2973	Mahal G Plot, 4th portion, pargana Sundarbans.	898 0 0	Do. ..	....	Satish Chandra Banerjee.	..	180 0 0	..
2977	Mahal Lot No. 117, 2nd portion, pargana Sundarbans.	943 0 0	Do. ..	....	Chandi Charan Laha	..	188 0 0	..
3014	Mahal Lot No. 150	1,040 0 0	Do. ..	....	Sm. Sushila Sundari Bose.	..	208 0 0	..
3026	Mahal 3rd portion of Chak Manasadip, pargana Sundarbans.	2,046 8 0	Do. ..	....	Radha Gobinda Jana	..	409 3 0	..

These estates are being advertised for sale for instalments of revenue which were due on or before the 30th of Agrahayan, 1341 B. S., and of which the latest date of payment was 12th January 1935.

Alipore, the 26th February 1935. [ILLEGIBLE], *for* Collector.

Notification A.

NOTICE is hereby given, under sections 6 and 13, Act XI of 1859, that the undermentioned estates and shares of estates in the district of Pabna will be put up for sale at the office of the Collector of that district on 25th of March 1935, at 12 noon, for arrears of revenue and other demands which by law are realisable as arrears of land revenue.

When in columns, 5, 7 and 9 of the following statement it is stated that only a share is to be sold, it is to be understood that a separate account is kept for that share :—

Tauzi No.	Name of mahal and pargana.	Sadar jama of whole estate.	Whether the whole estate is to be sold.	If only a share is to be sold, specification of such share or shares.	Names of proprietors of property to be sold.	If only a share is to be sold, the sadar jama of such share.	If the whole estate is to be sold, the arrears due from it.	If only a share is to be sold, the arrears due from it.
1	2	3	4	5	6	7	8	9
		Rs. a. p				Rs. a. p.	Rs. a. p.	Rs. a. p.
6	Dehi Haripur, pargana Isafsahi.	1,301 7 0	..	Residuary share 2 as. 13 gds. 1 c. 1 kt. share of Bayrahat, 10 as. 13 gds. 1 c. 1 kt. share of Barangail, China Dhukuria, Dhitpur Kashinagar, Gope Rekhi, Katalia, Palkamakhal *alias* Safaranai, 2 as. 13 gds. 1 c. 1 kt. share of Biandaha *alias* Shahazadpur, Raghunathpur. All other shares than that specified will be excluded from the sale.	Tarakeswar Talukdar and others.	660 12 0	..	270 0 0 Police— 4 0 0
169	K. Durgapur, pargana Isafnagar.	5,575 12 0	..	S. A. No. 16—3 annas share of Durgapur, Darampaon, Madhupur, Gandharbapur, Chakpirpur, Gangarampur, Jalkar Ghoradaha, Tajurpara, Bilkula, Simalichara, Sorapur, Chak Raghunathpur, Char Durgapur, Padmabilla, Sharupai *alias* Jola Bil Sharupai, 6 annas of Chak Golakpur, Chak Hapania, Sharuppur Laksmikol, Hapani and Faradpur, 8 gd. 2 kg. of Atalkula, 16 annas of Gobindapur and Mahmudpur, 3 c. 3 kg. 2 $\frac{802}{54249}$ tils share of Tailkupi Jote Daria Khan, 16 annas of Baniabaha, 1 a. 19 gds. 1 kg. 11 $\frac{8033}{18477}$ tils of Mahibaria, 10 gds. 12 $\frac{17692}{116659}$ tils of Madhupur with Jote Daria Khan, 1 kg. 3 tils of Raghunathpur with Majpara and Putigachha, 8 gds. 2 kg. of Chandi Satak and Jote Jagir. All other shares than that specified will be excluded from the sale.	Radharani Debi, mother and guardian of Pranab Gobinda Chaudhury, sebait of Iswar Gobinda Roy Bigraha.	784 0 0	..	516 7 0
67	K. Pindarhati and 1 others, pargana Sinduri.	654 1 0	..	Residuary share—16 annas share of Raninagar, 2 annas share of Saithupi, 16 annas share of Arkandi and Dalkandi Pukhariapar Chak Jote Mudafat Pukhariapar, Jalkar Potazia, Pindarhati, Sachania, Kismat, Paiksha, Gopalpur and Sarisha. All other shares than that specified will be excluded from the sale.	Gopeswar Saha and others.	551 8 0	..	37 1 9 Police— 2 7 6
205	Chak Gobindapur, pargana Katar Mahal.	1,560 0 0	Whole	....	Mir Jaynal Abdin and others.	..	281 3 0 Police— 5 2 3	..
248	K. Bayera, pargana Katar Mahal.	3,059 10 0	..	S. A. No. 2—4 annas share of the entire estate. All other shares than that specified will be excluded from the sale.	Kamala Prasad Sukul.	764 15 0	..	312 13 0
2182	Dehi Kashipur, pargana Mehamansahi.	3,059 12 0	..	S. A. No. 1—4 annas share of the estate. All other shares than that specified will be excluded from the sale.	Radhica Mohan Munshi and others.	914 15 0	..	438 14 9 Police— 2 2 0

Tauzi No.	Name of mahal and pargana.	Sadar jama of whole estate.	Whether the whole estate is to be sold.	If only a share is to be sold, specification of such share or shares.	Names of proprietors of property to be sold.	If only a share is to be sold, the sadar jama of such share.	If the whole estate is to be sold, the arrears due from it.	If only a share is to be sold, the arrears due from it.
1	2	3	4	5	6	7	8	9
		Rs. a. p.				Rs. a. p.	Rs. a. p.	Rs. a. p.
2182	Dehi Kashipur, pargana Mehamansahi.	3,659 12 0	..	S. A. No. 3.—14gds. 2c. 2kt. share of the estate. All other shares than that specified will be excluded from the sale.	Shyama Kishore Munshi and others.	167 12 1	..	109 14 6 Police— 0 14 1
2182	Ditto ..	3,659 12 0	..	S. A. No. 4—4gds. 2c. 2kt. share of the estate.	Jnanoda Sankar Sanyal and others.	53 14 0	..	35 5 7
2182	Ditto ..	3,659 12 0	..	S A. No. 5—3 annas share of the estate. All other shares than that specified will be excluded from the sale.	Gobinda Bandhu Datta and others.	686 3 5	..	253 15 1 Police— 0 1 8
2182	Ditto ..	3,659 12 0	..	S. A. No. 6—10 gandas share of the estate. All other shares than that specified will be excluded from the sale.	Krisna Chandra Bhaumik.	114 6 0 1,937 2 6	..	42 7 6 Police— 1 1 0
175	T. Shyampur, pargana Amirabad.	3,156 9 0	Whole	....	Surendra Krisna Datta and others.	..	1,583 3 0	..
148	K. Birahimpur, pargana Birahimpur.	6,759 11 0	..	Residuary share—13as. 15gds. share of Amharia, Bhati Raghunathpur, Golabari and Gopalbari, Gobinda-Kartic *alias* Bhulapara, Magurail, Mukundabari Paiksha, Ramnagar, Dharai, Guchhagaon, Natibpur, 10 annas share of Parachala, 4 annas share of Ranisnagar and Takigara, 4as. 10gds of Ruppur with jote Nabakanta Sanyasi. All other shares than that specified will be excluded from the sale.	Gopikrisna Saha ..	3,284 0 0	..	1,853 2 0 Police— 19 5 0
121	Dehi Fulbari, pargana Bajurash Mahabbatpur.	778 6 10	Whole	....	Asia Khatun, wife of A. M. Abdul Hamid.	..	8 9 0	...

These estates are being advertised for sale for instalments of revenue which were due on or before the 30th Agrahayan, 1341 B.S., of which the latest date of payment was 12th January 1935.

J. L. NANDI, *for* Collector.

Pabna, the 25th February 1935.

Notification A.

NOTICE is hereby given, under sections 6 and 13, Act XI of 1859, that the undermentioned estates and shares of estates in the district of Bakarganj will be put up for sale at the office of the Collector of that district on the 25th March 1935, at 12 noon, for arrears of revenue and other demands which by law are realizable as arrears of land revenue :—

Tauzi No.	Name of mahal and pargana.	Sadar jama of whole estate.	Whether the whole estate is to be sold.	If only a share is to be sold, specification of such share or shares.	Names of proprietors of property to be sold.	If only a share is to be sold, the sadar jama of such share.	If the whole estate is to be sold, the arrears due from it.	If only a share is to be sold, the arrears due from it.
1	2	3	4	5.	6	7	8	9
		Rs. a. p.					Rs. a. p.	
4538	Taluk No. 2/1-2 in Abad Taktabunia, pargana Sunderban.	11,134 0 0	Whole	....	Harendra Kumar Roy Choudhury and others.	..	34,052 8 0	..
4569	Osat Taluk No. 2 in Chak Hazikhali, pargana Sunderban.	574 9 0	Do. ..	....	Mr. C. F. D'Silva ..	..	474 9 0	..
4609	Taluk No. 1-1 in Abad Lalua, pargana Sunderban.	17,538 0 0	Do. ..	....	Barada Charan Datta and others.	..	24,614 0 0	..
4643	Taluk No. 2 in Bazarghona, pargana Sunderban.	7,611 0 0	Do. ..	....	Hem Kanta Sen Roy Choudhury and others.	..	2,784 9 11	..
4657	Abadkari Jote No. 35 in Char Badna, pargana Jazira.	805 10 0	Do. ..	....	Shamsul Hossain Choudhury and others.	..	380 10 0	..
4791	Abadkari Jote No. 101 in Char Nipattasi, pargana Jazira.	876 0 0	Do. ..	....	Abdul Gafur and others.	..	1,513 0 0	..
4791	Abadkari Jote No. 263 in Char Nipattasi, pargana Jazira.	777 14 0	Do. ..	....	Mathuranath Bagal and others.	..	1,415 0 8	..
4828	Taluk No. 1(A) in Abad Chhota Balshdia, pargana Sunderban.	16,638 0 0	Do. ..	....	Lakhshmi Charan De Sarkar and others.	..	7,021 6 0	..
5007	Howla No. 134 in Chak Dhalua, pargana Sunderban.	1,601 12 0	Do. ..	....	Abdur Rohman and others.	..	801 12 0	..
5007	Howla No. 312 in Chak Dhalua, pargana Sunderban.	753 2 0	Do ..	....	Afseruddin Howladar.	..	398 2 0	..
5007	Howla No. 372 in Chak Dhalua, pargana Sunderban.	999 11 0	Do. ..	....	Soleman ..	..	464 11 0	..
5007	Howla No. 418 in Chak Dhalua, pargana Sunderban.	1,785 7 0	Do. ..	....	Jabbaruddi and others.	..	485 7 0	..
5007	Howla No. 565 in Chak Dhalua, pargana Sunderban.	870 14 0	Do. ..	....	Faizuddin and others.	..	188 4 0	..
5007	Howla No. 626 in Chak Dhalua, pargana Sunderban.	1,139 2 0	Do ..	....	Sekandar Ali ..	..	1,146 11 0	..
5007	Howla No. 741 in Chak Dhalua, pargana Sunderban.	829 10 0	Do. ..	....	Sarada Charan De Sarkar.	..	329 10 0	..
5007	Howla No. 84 in Chak Dhalua, pargana Sunderban.	1,906 13 0	Do. ..	....	Munga Khan and others.	..	1,056 13 0	..
5007	Howla No. 188 in Chak Dhalua, pargana Sunderban.	831 2 0	Do. ..	....	Dakhshmina Ranjan Gope.	..	481 2 0	..
5007	Howla No. 26 in Chak Dhalua, pargana Sunderban.	503 6 0	Do. ..	....	Abdul Quddus and others.	..	253 6 0	..
5007	Howla No. 60 in Chak Dhalua, pargana Sunderban.	560 13 0	Do. ..	....	Jabbaruddin and others.	..	330 13 0	..
5007	Howla No. 85 in Chak Dhalua, pargana Sunderban.	828 3 0	Do. ..	....	Ditto ..	..	403 3 0	..

Tauzi No.	Name of mahal and pargana.	Sadar jama of whole estate.	Whether the whole estate is to be sold.	If only a share is to be sold, specification of such share or shares.	Names of proprietors of property to be sold.	If only a share is to be sold, the sadar jama of such share.	If the whole estate is to be sold, the arrears due from it.	If only a share is to be sold, the arrears due from it.
1	2	3	4	5	6	7	8	9
		Rs. a. p.					Rs. a. p.	
5007	Howla No. 247 in Chak Dhalua, pargana Sunderban.	655 12 0	Whole ..	....	Buzruk Ali and others.	..	255 12 0	..
5007	Howla No. 54 in Chak Dhalua, pargana Sunderban.	645 1 0	Do. ..	....	Ketaruddi and others.	..	311 1 0	..
5007	Howla No. 117 in Chak Dhalua, pargana Sunderban.	692 12 0	Do. ..	....	Osimuddi and others	..	337 12 0	..
5007	Howla No. 253 in Chak Dhalua, pargana Sunderban.	673 14 0	Do. ..	....	Abdul Quddus and others.	..	411 11 0	..
5007	Howla No. 857 in Chak Dhalua, pargana Sunderban.	619 6 0	Do. ..	....	Abi Abdulla Khan and others.	..	279 6 0	..
5007	Howla No. 748 in Chak Dhalua, pargana Sunderban.	508 14 0	Do. ..	....	Dakhshmina Ranjan Gope.	..	208 14 0	..
5007	Howla No. 835 in Chak Dhalua, pargana Sunderban.	516 13 0	Do. ..	....	Sonomuddin and others.	..	232 13 0	..
5008	Howla No. 2 in Chak Barguna, pargana Sunderban.	1,197 2 0	Do. ..	....	Abdul Karim and others.	..	892 2 0	..
5008	Howla No. 46 in Chak Barguna, pargana Sunderban.	1,266 4 0	Do. ..	....	Afeluddi and others	..	510 4 0	..
5008	Howla No. 119 in Chak Barguna, pargana Sunderban.	1,797 14 0	Do. ..	....	Indubhusan Kapali and others.	..	842 14 0	..
5008	Howla No. 310 in Chak Barguna, pargana Sunderban.	610 11 0	Do. ..	....	Osman Ali and others.	..	301 11 0	..
5008	Howla No. 344 in Chak Barguna, pargana Sunderban.	1,088 10 0	Do. ..	....	Gagan Howladar and others.	..	346 10 0	..
5008	Howla No. 378 in Chak Barguna, pargana Sunderban.	1,089 8 0	Do. ..	....	Hashem Howladar and others.	..	439 8 0	..
5008	Howla No. 407 in Chak Barguna, pargana Sunderban.	573 12 0	Do. ..	....	Tazu Khan and others.	..	513 12 0	..
5008	Nim Howla No. 445 in Chak Barguna, pargana Sunderban.	1,135 12 0	Do. ..	....	Dinobandhu apali and others.	..	485 12 0	..
5008	Howla No. 647 in in Chak Barguna, pargana Sunderban.	1,405 4 0	Do. ..	....	Sarada Charan De Sarkar.	..	750 4 0	..
5008	Howla No. 771 in Chak Barguna, pargana Sunderban.	1,294 6 0	Do. ..	....	Mohammad Yusuf Sikder.	..	1,430 6 0	..
5008	Howla No. 224 in Chak Barguna, pargana Sunderban.	1,773 11 0	Do. ..	....	Meheruddi and others.	..	619 11 0	..
5008	Howla No. 352 in Chak Barguna, with Howla No. 993 in mauza Helibunia, pargana Sunderban.	1,420 7 0	Do. ..	....	Sarada Charan De Sarkar.	..	100 7 0	..
5008	Nim Howla No. 396 in Chak Barguna, pargana Sunderban.	542 4 0	Do. ..	....	Sonamuddi ..	..	280 4 0	..
5008	Howla No. 12 in Chak Barguna, pargana Sunderban.	876 11 0	Do. ..	....	Abani Mohan Choudhury and others.	..	177 11 0	..
5008	Howla No. 65 in Chak Barguna, pargana Sunderban.	597 2 0	Do. ..	....	Adam Ali and others.	..	285 2 0	..

Tauzi No.	Name of mahal and pargana.	Sadar jama of whole estate.	Whether the whole estate is to be sold.	If only a share is to be sold, specification of such share or shares.	Names of proprietors of property to be sold.	If only a share is to be sold, the sadar jama of such share.	If the whole estate is to be sold, the arrears due from it.	If only a share is to be sold, the arrears due from it.
1	2	3	4	5	6	7	8	9
		Rs. a. p.					Rs. a. p.	
5008	Howla No. 99 in Chak Barguna, pargana Sunderban.	600 8 0	Whole ..	....	Adam Ali and others	..	117 8 0	..
5008	Howla No. 236 in Chak Barguna, pargana Sunderban.	691 5 0	Do. ..	....	গিয়াজদ্দি Goyazuddi and others.	..	161 5 0	..
5008	Howla No. 296 in Chak Barguna, pargana Sunderban.	674 2 0	Do. ..	....	Gagan and others	..	172 5 0	..
5008	Howla No. 333 in Chak Barguna, pargana Sunderban.	500 15 0	Do. ..	....	Ditto ..	..	251 15 0	..
5008	Howla No. 365 in Chak Barguna, pargana Sunderban.	595 0 0	Do. ..	....	Ditto ..	..	240 0 0	..
5008	Howla No. 404 in Chak Barguna, pargana Sunderban.	793 7 0	Do. ..	....	Azharuddin Ahmad	..	276 7 0	..
5008	Howla No. 517 in Chak Barguna, pargana Sunderban.	552 15 0	Do. ..	....	Dwarika Nath Sen and others.	..	106 1 3	..
5008	Howla No. 565 in Chak Barguna, pargana Sunderban.	582 6 0	Do. ..	....	Prosanna Kumar Das and others.	..	253 6 0	..
5008	Howla No. 691 in Chak Barguna, pargana Sunderban.	753 3 0	Do. ..	....	Maga Khan and others.	..	328 3 0	..
5008	Howla No. 920 in Chak Barguna, pargana Sunderban.	837 15 0	Do. ..	....	Raimohan De ..	..	122 15 0	..
5008	Howla No. 1002 in Chak Barguna, pargana Sunderban.	1,879 1 0	Do. ..	....	Saroda Charan De Sarkar.	..	788 1 0	..
5008	Howla No. 1048 in Chak Barguna, pargana Sunderban.	1,107 14 0	Do. ..	....	Hamizuddi and others.	..	553 14 0	..
5008	Howla No. 4 in Chak Barguna, pargana Sunderban.	1,029 6 0	Do. ..	....	Abanimohan Choudhury and others.	..	336 6 0	..
5008	Howla No. 55 in Chak Barguna, pargana Sunderban.	2,815 15 0	Do. ..	....	Akhoy Kumar Saha and others.	..	1,585 15 0	..
5008	Howla No. 135 in Chak Barguna, pargana Sunderban.	511 11 0	Do. ..	....	Abdul Latif and others.	..	70 7 0	..
5008	Howla No. 173 in Chak Barguna, pargana Sunderban.	580 14 0	Do. ..	....	Mohammad Kalu and others.	..	155 14 0	..
5008	Howla No. 227 in Chak Barguna, pargana Sunderban.	1,040 10 0	Do. ..	....	Dakhshmina Ranjan Gope.	..	478 10 0	..
5008	Howla No. 534 in Chak Barguna, pargana Sunderban.	1,040 10 0	Do. ..	....	Tuzamber Ali and others.	..	540 7 6	..
5008	Howla No. 633 in Chak Barguna, pargana Sunderban.	1,700 12 0	Do, ..	....	Fatik Howlader and others.	..	626 12 0	..
5008	Howla No. 667 in Chak Barguna, pargana Sunderban.	503 3 0	Do. ..	....	Raimohan De and others.	..	151 3 0	..
5008	Howla No. 491 in Chak Barguna, pargana Sunderban.	628 13 0	Do. ..	....	Hachanaddi and others.	..	197 5 6	..
5008	Howla No. 545 in Chak Barguna, pargana Sunderban.	697 14 0	Do. ..	....	Saal Kumar and others.	..	295 14 0	..

Tauzi No.	Name of mahal and pargana.	Sadar jama of whole estate.	Whether the whole estate is to be sold.	If only a share is to be sold, specification of such share or shares.	Names of proprietors of property to be sold.	If only a share is to be sold, the sadar jama of such share.	If the whole estate is to be sold, the arrears due from it.	If only a share is to be sold, the arrears due from it.
1	2	3	4	5	6	7	8	9
		Rs. a. p.					Rs. a. p.	
5008	Howla No. 41 in Chak Barguna with Howla No. 38 in mauza Puler Baliatali, pargana Sunderban.	597 10 0	Whole ..	....	Afseruddin and others.	..	307 10 0	..
5008	Howla No. 80 in Chak Barguna, pargana Sunderban.	649 13 0	Do. ..	....	Dhalal and others ..	..	251 15 0	..
5008	Howla No. 153 in Chak Barguna, pargana Sunderban.	740 10 0	Do. ..	....	Hachan Ali and others.	..	66 0 0	..
5215	Howla No. 349 in Char Madhupura, pargana Jazira.	1,086 0 0	Do. ..	....	Chand Bibi and others.	..	311 12 4	..
5215	Howla No. 745 in Char Madhupura, pargana Jazira.	2,571 2 0	Do. ..	....	Sushamabala Debi	..	2,371 2 0	..
5216	Howla No. 1460 in Char Balragia, pargana Jazira.	2,702 10 0	Do. ..	....	Probhash Chandra Dutta.	..	2,430 6 4	..
5235	Howla No. 19 in Char Tabgi, pargana Jazira.	4,931 3 0	Do. ..	....	Mohesh Chandra Podder.	..	1,933 11 6	..
5236	Howla No. 16 in Dhaligaurnagar, pargana Jazira.	586 10 0	Do. ..	....	Sachindra Kumer Mitra.	..	236 10 0	..
5245	Howla No. 175 in Chak Lalmohan, pargana Jazira.	1,012 4 0	Do. ..	....	Ukiluddin Patowari and others.	..	891 2 8	..
5246	Howla No. 202 in Dhaligaurnagar, pargana Dakhshmin Sahabajpur.	976 14 0	Do. ..	....	Harinarayan Saha	..	278 7 0	..
5246	Howla No. 254 in Dhaligaurnagar with Howla No. 912 in mauza Chatia, pargana Dakhshmin Sahabajpur.	1,375 13 0	Do. ..	....	Badsha Mia and others.	..	1,375 13 0	..
5257	Howla No. 2 in Char Krishtaprosad, pargana Jazira.	7,840 15 0	Do. ..	....	Murari Mohan Mukherjee.	..	6,590 15 0	..
6497	Taluk No. 2 in Chak Nattona part II, pargana Sunderban.	4,281 0 0	Do. ..	....	Harsha Mohan Nlogi.	..	1,181 0 0	..
6569	Osat Howla No. 12 in Char Fasson, pargana Jazira.	769 0 0	Do. ..	....	Jalal Ahmad and others.	..	194 0 0	..

The above tenures are being advertised for sale for the instalments of revenue which were due on or before 30th Falgoon, 1340 B.S. of which the latest date of payment was 28th March 1934.

Barisal, the 26th February 1935.

Md. MAHMUD, Addl. Collector.

Notification A.

NOTICE is hereby given, under sections 6 and 13, Act XI of 1859, that the undermentioned estates and shares of estates in the district of Midnapore, will be put up to sale at the office of the Collector of that district on the 25th March 1935, at 12 noon, for arrears of revenue and other demands which by law are realizable as arrears of land revenue.

When in columns 5, 7 and 9 of the following statement it is stated that only a share is to be sold, it is to be understood that a separate account is kept for that share :—

Tauzi number.	Name of mahal and pargana.	Sadar jama of whole estate.	Whether the whole estate is to be sold.	If only a share is to be sold, specification of such share or shares.	Names of proprietors of property to be sold.	If only a share is to be sold, the sadar jama of such share.	If the whole estate is to be sold, the arrears due from it.	If only a share is to be sold, the arrears due from it.
1	2	3	4	5	6	7	8	9
		Rs. a. p.				Rs. a. p.	Rs. a. p.	Rs. a. p.
301	Pargana Batitaki, mahal Gumai.	653 0 1	Entire	....	Santosh Jamini Dassi and others, auction purchaser Surendra Nath Setua.	..	275 0 2	..
312	Pargana Batitaki, mahal Palgeria.	630 1 7	Do. ..	....	Sree Kisan Darghar and Kedar Nath Pal and another, sebaits of Lakshmi Janardanjew Thakur.	..	217 10 0	..
389	Pargana Bhuianmutha, mahal Paschim Masaria *alias* Betalghatial.	3,620 11 8	..	Residuary Account— 4as. 8gds. 3c. 1kt. 2dt. share of mauza Bakibarh. 5as. 6gds. 2c. 2kt. share of mauzas Betal and Khatian. 2as. 13gds. 1c. 1kt. share of mauzas Chinadari, Dwarikapur, Katgochia, Kotebarh, Masaria Paschim, Mirachak and Simulya Madhya. 4as. 8gds. 3c. 1kt. 1dt. share of mauzas Kishorepur, Khatian and Masariapurba. All other shares than that specified will be excluded from sale.	Nagendra Kumar Hazra and others.	1,307 9 0	..	154 7 5
440	Pargana Chandrakona, mahal Baraberia.	10,925 8 5	..	S. A. No. 2—16 annas share of mauzas Kamargeria and Kamargeria Kismat. All other shares than that specified will be excluded from sale.	Khudiram Mukhapadhya and others.	1,813 6 6	..	679 5 0
478	Pargana Chandrakona, mahal Kuldaha.	10,784 7 2	..	S. A. No. 2—2as. 2gds. 2c. 2kt. share of the mahal. All other shares than that specified will be excluded from the sale.	Khirode Prosad Chakravarty and others.	1,457 14 10	..	104 11 5
510	Pargana Chandrakona, mahal Rameswarpur.	11,594 11 8	Entire	....	Manahar Lal Seal	..	4,326 11 8	..
548	Pargana Chetua, mahal Gangpur.	8,143 13 10	Do. ..	....	Janakilal Khandelwala.	..	3,058 12 0	..
558	Pargana Chetua, mahal Gaura.	4,449 9 11	..	Residuary Account— 5as. 11gds. 2c. 1kg. 13til share of mauzas Gaura Kuchmari and Jagatchak. 5as. 9gds. 2c. 3kg. 4til share of mauza Nandanpur. 5as. 11gds. 2c. 1kg. 16til share of mauza Jalalpur. 4as. 11gds. 2c. 1kg. 17 $\frac{1}{24}$ til. 1c. 1kg. 1 til share of mauza Singhachak. 4as. 11gds. 2c. 1kg. 17 $\frac{1}{24}$ til; 2c. 1til share of mauza Jotegobordhan. 5 as. 9 gds. 2 c. 3 kgs. 8 $\frac{1}{2}$ tils. 1 c. 7 tils. 1 c. of mauza Kismat Salla. 5 as. 9 gds. 2 c. 3 kgs. 7 $\frac{1}{2}$ til. 3 c. 7 til. 1 c. share of mauza Chakdinu. 8 as. 4 gds. 2 c. 2 kg. 14 $\frac{1}{2}$ til 1 c. 2 kg. 9 til 1 c. 3 kg. share of mauza Barbharatpur. All other shares than that specified will be excluded from sale.	Debendranath Ghose, auction purchaser Probodh Chandra Chaudury, R. A. No. 2.	1,541 1 10	.. ..	575 4 0

Tauzi number.	Name of mahal and pargana.	Sadar jama of whole estate.	Whether the whole estate is to be sold.	If only a share is to be sold, specification of such share or shares.	Names of proprietors of property to be sold.	If only a share is to be sold, the sadar jama of such share.	If the whole estate is to be sold, the arrears due from it.	If only a share is to be sold, the arrears due from it.
1	3	3	4	5	6	7	8	9
		Rs. a. p.				Rs. a. p.	Rs. a. p.	Rs. a. p.
745	Pargana Egrachore, mahal Kasba.	854 9 0	..	Residuary Account—16 annas share of mauzas Ainan, Dabetya, Damodartiram, Giridharpur, Jamgan, Kasba, Kasbapatna, Kamardiha, Kaurda, Laskarpur, Latifabad, Muhammedpur, Neyaribara, Parusattampur, Raghutiran and Saifalchak. 13 as. 2 gds. 1 c. 1 kt. share of mauza Bajarpur. 16 annas share of mauza Satarang. All other shares than that specified will be excluded from sale.	Lalit Mohan Pal and others.	768 7 9	..	75 3 7
937	Pargana Kasijora, mahal Garhpurusattampur *alias* Chaitanyapur.	738 10 8	..	Residuary Account—12 as 16 gds. share of the estate. All other shares than that specified will be excluded from sale.	Trailakhya Nath Maiti.	590 14 8	..	187 15 5
969	Pargana Kasijora, mahal Kisore Chak.	579 4 5	Entire	....	Lakshmi Janardan Jew, sebait Bishnupada Kole and another.	..	197 5 0	..
1007	Pargana Kasijora, mahal Purba Itara.	43,136 8 8 (Including Police).	..	Residuary Account—4 annas share of the mahal. All other shares than that specified will be excluded from sale.	Manahar Lal Seal ..	10,783 11 10 (Including Police).	..	3,707 3 8 (Including Police).
1039	Pargana Kismat Kasijora, mahal Gopalnagar.	1,511 0 9	..	Residuary Account—5 as. 6 gds. 2 c. 2 kt. share of the estate All other shares than that specified will be excluded from sale.	Haripada Maiti and another.	503 10 11	..	172 2 10
1039	Ditto ..	1,511 0 9	..	S. A. No. 1.—5 as. 6 gds. 2 c. 2 kt. share of the estate. All other shares than that specified will be excluded from sale.	Bhupati Charan Jana and another.	503 10 11	..	173 0 11
1039	Ditto ..	1,511 0 9	..	S. A. No. 2—5 as. 6 gds. 2 c. 2 kt. share of the estate. All other shares than that specified will be excluded from sale.	Bhubanmohan Jana and others.	503 10 11	..	172 15 10
1048	Pargana Kasijora, mahal Kanakpur, *alias* Narendra Kanakpur.	2,383 13 6 including Police.	..	S. A. No. 12—3 as 13 gds. 1 c. 1 kt. share of the estate. All other shares than that specified will be excluded from sale.	Fakir Chandra Das and others.	546 4 9 including Police.	..	187 12 7 including Police.
1196	Pargana Kedarkundu, mahal Gogram	724 12 0	..	Residuary Account—16 annas share of mauzas Dayalpur, Gopinathpur, Hridayramchak, Kenturhi Patgerhe, Rajaramchak, Sagarchak and Sutchhrhachak. All other shares than that specified will be excluded from sale.	Narendra Kumar Nag.	573 13 4	..	0 9 0
1485	Pargana Khandar, mahal Belki *alias* Bar Raghunath.	875 9 3	Entire	....	Rashmoni Atta and others.	..	303 13 3	..
1660	Pargana Khandar, mahal Panchpara.	4,053 11 5	..	S. A. No. 10—2 as. 1 gd. 3 c. 2 kt. share of mauzas Abdulya, Arun, Arunchak, Fatechak, Jamna, Kamalchak and Ranihati. 5 as. 6 gds. 2 c. 2 kt. share of mauzas Barageria, Barampur, Basudebchak, Bhabanichak, Bhisandapur, Dehati, Gourangachak, Jatalia, Jotejan, Kanuchak, Kanua, Khelna, Madhyajetha, Maguria Sana, Norattamchak, Nakpura, Narayan, Bhulanchak, Palaschak, Panchpara, Paniaulya, Ramdebchak, Sarupchak, Sankarbarh, Satrangiharibarh, Simlagera, Shyamchakbar, Shyamsundarpur and Trilochanpur.	Dhirendra Nath Ghose and another.	982 11 0	..	337 12 7

Tauzi No.	Name of mahal and pargana.	Annual land revenue of whole estate.	Whether the whole estate is to be sold.	If only a share is to be sold, specification of such share or shares.	Names of proprietors of property to be sold.	If only a share is to be sold, the sadar jama of such share.	If the whole estate is to be sold, the arrears due from it.	If only a share is to be sold, the arrears due from it.
1	2	3	4	5	6	7	8	9
		Rs. a. p.		2 as. 13 gds. 1 c. 1 kt. share of mauzas Basantapur, Binodechak, Gokulpur, Lakshmia, Madhusudanchak, Monoharchak, Palgokul, Pithaichak, Rasikchak, Ralchak and Salamdi. 4 as. 15 gds. 1 c. share of mauzas Jorura and Mahadichak. All other shares than that specified will be excluded from sale.		Rs. a. p.	Rs. a. p.
1995	Pargana Narayangarh Kismat, mahal Khelari *alias* Banpatna.	3,415 1 7	..	Residuary Account—16 annas share of mauzas Balaramchak, Banpatna, Bagberya, Baligerya, Benapuradihi, Bhagabanpur, Chaita, Kuchiabhaluk, Khalaridihi, Nischindipur, Parijatnagar, Purusuttomchak, Prempara, Raghunathpur, Raipur, Sikharpari. 5 as. 0 gds. 2 c. 2 kt. share of mauzas Alichak, Deulabarh, Harachak, Kaitpur, Kalikachak, Madhuchak, Mondalagerha, Madhabchak, Nekragera, Panguchota, Satrughnabarh, Santalchak and Uchhabanadabarh. 10 as. 13 gds. 1 c. 1 kt. share of mauzas Bagrabej, Brahmanibera, Hirapari, Hiraparikiat, Kaimkhan, Kaimchak, Kalidasbhera, Khatrageryachak, Lohabarauchak, and Tatara. All other shares than that specified will be excluded from sale.	Chowdhury Biswambar Das Prahraj Mohapatra and others.	2,441 1 2	..	0 0 11
2243	Pargana Sabang, mahal Murarichak.	666 3 5	Entire	....	Tarak Nath Maiti and others.	..	230 0 0	..
2327	Pargana Sabang, mahal Sabang *alias* Khelna, Kasba, Balarampur.	1,128 10 0	Do. ..	....	Binode Behari Kundu Chaudhuri and another.	..	354 12 1	..
2338	Pargana Sabang, mahal Seullpur.	861 13 4	..	Residuary Account— 16 annas share of mauzas Binandachak, Bhatbarh, Gotegerya, Ghasichak, Kakdapara, Korurbarh, Kajlchak, Negalkata, Monoharpur, Monoharpur Khalpar, Salmarabara, Salmarachhoto, Seullpur, Birbhanpur Paschim, Chalukhuri, Durgaprosadchak, Gopalchak, Narayanbarh, Pakuriachak, Raghunathchak, Sallabheri, Bhanjapur, Markandachak, Gopalbarh and Sadhulyapur. 4 as. 10 gds. share of mauzas Kalyanpur and Roypur. All other shares than that specified will be excluded from sale.	Debiprosad Bhakat and others Auction purchasers Jogendra Nath Das and others.	726 12 9	..	250 5 3
3070	Pargana Mandalghat, mahal Ramjungle.	19,255 3 6	..	S. A. No. 9—2 as. 5 gds. share of the mahal. All other shares than that specified will be excluded from sale.	Monohar Lal Seal ..	2,708 9 0	..	1,016 11 2
3070	Ditto ..	19,255 3 6	..	S. A. No. 10—2 as. 5 gds. share of the mahal. All other shares than that specified will be excluded from sale.	Tarak Lal Seal and another.	2,708 8 9	..	1,016 10 10
				Part II.				
2816	Pargana Narumutha, mahal Narumutha, Jalpai, Khaspatit, etc.	12,753 8 0	..	Residuary Account—10 as. 2 gds. 2 c. 2 kt. share of the mahal. All other shares than that specified will be excluded from sale.	Biraja Charan Nanda and others.	8,077 5 0	..	584 9 6

Midnapore, the 26th February 1935.

J. C. BANERJI, *for* Collector.

Notification B.

NOTICE is hereby given, under sections 5 and 13, Act XI of 1859, that unless the arrears which were due on or before the 31st Bhadra, 1340 B.S., 29th Agrahayan, 1340 B.S., 30th Falgun, 1340 B.S. and 32nd Jaistha, 1341 B.S. and of which the latest date of payment was on the 5th October 1933, 12th January 1934, 28th March 1934, 28th June 1934, and which will be due on or before the 30th Falgun, 1341 B.S., and of which the latest date of payment will be on the 28th March 1935, mentioned below are paid on or before the next latest date of payment, viz., the 28th March 1935, the undermentioned estates or shares of estates in the district of Midnapore will be put up for sale at the office of the Collector of that district on the 25th June, 1935 at 12 noon for the said arrears.

When in columns 5, 7 and 9 of the following statement it is stated that only a share is to be sold, it is to be understood that a separate account is kept for that share :—

Tauzi No.	Name of mahal and pargana.	Sadar jama of whole estate.	Whether the whole estate is to be sold.	If only a share is to be sold, specification of such share or shares.	Names of proprietors of property to be sold.	If only a share is to be sold, the sadar jama of such share.	If the whole estate is to be sold, the arrears due from it.	If only a share is to be sold, the arrears due from it.	Nature and amount of demand for which to be sold.
1	2	3	4	5	6	7	8	9	10
		Rs. a. p.				Rs. a. p.		Rs. a. p.	Rs. a. p.
2039	Pargana Purusattompur, mahal Purusottompur.	6,679 8 11	..	S. A. No. 5— 1a. 4 pies share of the mahal. All other shares than that specified will be excluded from the sale.	Taranath Lahiri and another.	556 10 1	..	555 9 8 from September 1933 to June 1934.	Land Rev. for Sept. 1933— 42 7 4 Jan. 1934 — 191 5 4 March 1934— 260 15 3 June 1934— 60 13 9 555 9 8 Land Rev. for March 1935— 260 15 3 Cess— 24 14 6 841 7 5

Midnapore, the 26th February 1935.

J. C. BANERJI, *for* Collector.

Notification A.

NOTICE is hereby given, under sections 6 and 13, Act XI of 1859, that the undermentioned estates and shares of estates in the district of Dinajpur, will be put up for sale at the office of the Collector of that district on the 26th March 1935, at 12 noon, for arrears of revenue and other demands which by law are realizable as arrears of land revenue.

When in columns 5, 7 and 9 of the following statement it is stated that only a share is to be sold, it is to be understood that a separate account is kept for that share :—

Touzi No.	Name of mahal and pargana.	Sadar jama of whole estate.	Whether the whole estate is to be sold.	If only a share is to be sold, specification of such share or shares.	Names of proprietors of property to be sold.	If only a share is to be sold, the sadar jama of such share.	If the whole estate is to be sold, the arrears due from it.	If only a share is to be sold, the arrears due, from it.
1	2	3	4	5	6	7	8	9
		Rs. a. p.				Rs. a. p.	Rs. a. p.	Rs. a. p.
67	Mahal Nagendra Behari Roy Chaudhury, pargana Jhapartall.	5,054 4 0	Yes ..	..	Nagendra Behari Roy Chaudhury.	..	1,389 0 0	..
68	Mahal Ghanashyampur, pargana Salbari.	6,374 11 8	Shares mentioned in column 5 will be put up to sale together.	6 as. 10 g. residuary share.	Girija Bollav Chaudhury.	2,589 11 8	..	706 11 7
				9 as. 10 g., separate account No. 2.	Nagendra Behari Roy Chaudhury.	3,785 0 0	..	1,032 0 .
105	Mahal Ghoraband, pargana Deora.	5,737 4 6	Yes ..	..	Murali Mohan Sen and others.	..	2,218 0 0	..
114	Mahal Brajabaljavpur, pargana Dhanjore.	8,348 3 2	Shares mentioned in column 5 will be put up to sale together.	8 annas residuary share.	Debesh Chandra Mukhapadhyaya.	4,174 1 7	..	155 7 10
				8 annas, separate account No. 1.	Binoy Krishna Banerjee.	4,174 1 7	..	155 7 10
169	Mahal Gachhatta, pargana Bajitpur.	7,155 8 0	No ..	2 as. 13 g. 1 c. 1 kt., separate account No. 1.	Umesh Chandra Khasnavis.	1,192 9 4	..	322 2 8
				2 as. 13 g. 1 c. 1 kt., separate account No. 2.	Gopendra Narayan Roy.	1,192 9 4	..	322 2 8
				5 as. 6 g. 2 c. 2 kt., separate account No. 3.	Surendra Narain Chaudhury.	2,385 2 8	..	644 5 4
				1a. 6 g. 2 c. 2 kt., separate account No. 5.	Umesh Chandra Khasnavis.	596 4 8	..	160 15 8
				1 a. 6 g. 2 c. 2 kt., separate account No. 6.	Gopendra Narain Rai	596 4 8	..	161 0 0
				13 as. 6 g. 2 c. 2 kt. All other shares, 2 as. 13 g. 1 c. 1kt., will be excluded from sale.				
184	Mahal and pargana Rajnagar.	5,191 10 11	Yes ..	..	Maharaj Bahadur Singh.	..	1,492 15 11	..
462	Mahal Safanagar, pargana Kardaha.	7,637 8 6	Yes ..	..	Sayed Badrudja and others.	..	2,072 15 6	..
463	Mahal Amrah, pargana Gilahabari.	5,016 2 5	Yes ..	..	Brojo Bhusan Roy Chaudhury and others.	..	1,356 15 6	..

This notice is issued in respect of instalment of revenue due on or before the 30th Agrahayan, 1341 B.S., of which the latest date of payment was 12th January 1935 A.D.

Dinajpur, the 23rd February 1935.

[ILLEGIBLE], *for* Collector.

Notification A.

NOTICE is hereby given, under sections 6 and 13, Act XI of 1859, that the undermentioned estates and shares of estates in the district of Bakarganj will be put up for sale at the office of the Collector of that district on the 25th March 1935, at 12 noon, for arrears of revenue and other demands which by law are realizable as arrears of land revenue.

When in columns 5, 7 and 9 of the following statement it is stated that only a share is to be sold, it is to be understood that a separate account is kept for that share :—

Tauzi No.	Name of mahal and pargana.	Sadar jama of whole estate.	Whether the whole estate is to be sold.	If only a share is to be sold, specification of such share or shares.	Names of proprietors of property to be sold.	If only a share is to be sold, the sadar jama of such share.	If the whole estate is to be sold, the arrears due from it.	If only a share is to be sold, the arrears due from it.
1	2	3	4	5	6	7	8	9
		Rs. a. p.				Rs. a. p.	Rs. a. p.	Rs. a. p.
1	Zemindari Azimpur, tappa Azimpur.	2,430 1 4	..	5 as. 9 g. 3 c. 1 kt. 10 til 10 chhatak share covered by separate account No. 1 will be sold. All other shares than that specified will be excluded from sale.	Dilip Kumar Ray Chaudhury and others.	834 6 3	..	116 6 6
813	Taluk Mahammad Idrak, pargana Bangorora.	2,631 14 0	Whole	....	Golam Mostafa Choudhury and others.	..	1,431 7 11	..
1408	Taluk Abu Mahammad, pargana Bazorgomedpur.	2,965 4 1	Do. ..	....	Radha Charan Das and others.	..	1,266 11 10	..
1433	Taluk Barhan Khan, pargana Bazorgomedpur.	1,735 0 2	Do. ..	8 annas residuary and 8 annas share covered by separate account No. No. 1 will be sold.	Ashutosh Ganguly and another.	..	1,348 13 6	..
1436	Taluk Baidya Nath Singh, pargana Bazorgomedpur.	3,003 0 0	Do. ..	....	Narsindas Chatterjee	..	1,650 5 4	..
1441	Taluk Chandra Shekhar Chakraborty, pargana Bazorgomedpur.	2,651 11 1	..	2 as. 6 g. 2 c. 2 kt. share covered by separate account No. 2 and 3 annas share covered by separate account No. 4 will be sold. All other shares than that specified will be excluded from sale.	Kiran Chandra Chakraborty and others.	883 13 0	..	457 13 4
1448	Mahal Darihat Rajbarigan, pargana Bazorgomedpur.	708 15 0	Whole	....	Durga Prosanna Ray Chaudhury and others.	..	583 10 0	..
1459	Taluk Fate Chand, pargana Bazorgomedpur.	3,150 8 7	..	7 as. 10 g. residuary and 5 as. 13 g. 1 c. 1 kt. share covered by separate account No. 2 will be sold. All other shares than that specified will be excluded from sale.	Bipin Behari Bose and others.	2,592 10 2	..	2,006 6 9
1462	Taluk Golam Ali, pargana Bazorgomedpur.	1,100 14 0	Whole	....	Abdul Hashem Sikdar.	..	442 0 4	..
1479	Taluk Ganga Gobinda Nag, pargana Bazorgomedpur.	808 9 8	Do. ..	....	Upendra Mohan Pal Chaudhury.	..	125 13 10	..
1482	Taluk Harnath Ghoshal, pargana Bazorgomedpur.	4,035 14 6	Do. ..	....	Bomkesh Chatterjee and others.	..	2,592 7 8	..
1509	Mahal Kalidas Ghatak, pargana Bazorgomedpur.	2,082 15 1	..	5 as. 11 g. 1 c. 1 kt. 10 til residuary and 1 a. 6 g. 2 c. 2 kt. share covered by separate account No. 2 and 1 anna share covered by separate account No. 4 will be sold. All other shares than that specified will be excluded from sale.	Akhoy Kumar Shaha and others.	1,028 12 1	..	342 6 0
1510	Ditto ..	694 5 0	Whole	....	Mathura Mohan Das and others.	..	378 12 4	
1533	Taluk Krishna-Prosad Guha, pargana Bazorgomedpur.	3,960 15 8	..	4 annas share covered by separate account No. 1 will be sold. All other shares than that specified will be excluded from sale.	Harendra Lal Ray Chaudhury.	990 4 0	..	68 0 0
1555	Taluk Mahammad Jamir, pargana Bazorgomedpur.	559 11 11	Whole	....	Biseswar Chakraborty and others.	..	265 9 6	..

Tauzi No.	Name of mahal and pargana.	Sadar jama of whole estate.	Whether the whole estate is to be sold.	If only a share is to be sold, specification of such share or shares.	Names of proprietors of property to be sold.	If only a share is to be sold, the sadar jama of such share.	If the whole estate is to be sold, the arrears due from it.	If only a share is to be sold, the arrears due from it.
1	2	3	4	5	6	7	8	9
		Rs. a. p.				Rs. a. p.	Rs. a. p.	Rs. a. p.
1567	Taluk Nazimuddin, pargana Bazorgomedpur.	972 13 5	Whole	8 annas residuary and 8 annas share covered by separate account No. 1 will be sold.	Abinash Chandra Banerjee and others.	..	585 3 1	..
1599	Taluk Raj Kishore Rakhit, pargana Bazorgomedpur.	2,138 13 5	Do. ..	11 annas residuary and 5 annas share covered by separate account No. 1 will be sold.	Karuna Kanta Ghose and others.	..	332 12 10	..
1634	Taluk Ram Raja Gan, pargana Bazorgomedpur.	542 11 7	Do. ..	....	Kumar Satya Mohan Ghoshal Bahadur and others.	..	369 1 6	..
1641	Taluk Ram Ratna Das, pargana Bazorgomedpur.	1,831 0 10	..	10as. 6g. 2c. 2kt. residuary share will be sold. All other shares than that specified will be excluded from sale.	Jatindra Kumar Ray Chaudhury and others.	1,182 7 10	..	374 3 10
1653	Taluk Raman Krishna Nag, pargana Bazorgomedpur.	541 14 1	Whole	....	Abinash Chandra Banerjee, trustee.	..	155 10 5	..
1671	Taluk Surja Narain Sen, pargana Bazorgomedpur.	1,158 8 2	Do.	....	Kumar Satya Mohan Ghoshal Bahadur and others.	..	906 2 1	..
1720	Zemindari Chandradvip, pargana Chandradvip.	44,488 2 0	..	4 annas share covered by separate account No. 1 will be sold. All other shares than that specified will be excluded from sale.	The Jessore Loan Co., Ltd.	11,121 1 0	..	9,346 3 8
1723	Zemindari share 1a. 17g. 1c. 2kt., pargana Chandradvip.	9,617 1 0	Whole	....	Nanak Dehi Barmani, guardian for her minor son Monoranjan Prosad Barman.	..	4,793 0 8	..
1729	Taluk Chandra Shekhar Chakrabarty, pargana Chandradvip.	2,531 6 6	Do.	....	Nibaran Chandra Banerji, common manager.	..	1,735 7 9	..
1740	Taluk Khaje Nur, pargana Chandradvip.	1,544 0 0	Do.	13as. 2g. 1c. residuary and 2as. 17g. 3c. share covered by separate account No. 1 will be sold.	Sadaruddin Ahmed and others.	..	1,244 0 0	..
1748	Taluk Mohammad Hayat, pargana Chandradvip.	7,062 5 8	..	5as. 2g. residuary and 2as. 2g. 1c. 15till share covered by separate account No. 4 will be sold. All other shares than that specified will be excluded from sale.	Ramani Mohan Ray Chaudhury and others.	3,185 2 4	..	2,076 15 4
1752	Taluk Ram Ballav Chakraborty, pargana Chandradvip.	3,298 9 0	Whole	....	Sarat Chandra Ghose, common manager to the estates of Nalini Kanta Chakraborty and others.	..	6,655 3 9	..
1762	Taluk Shib Chandra Das and others, pargana Chandradvip.	6,013 1 10	..	5as. 3g. 1c. 1kt. residuary share will be sold. All other shares than that specified will be excluded from sale.	Surendra Kumar Ray Chaudhury and others.	1,941 11 10	..	343 6 0
1929	Zemindari share 2 annas, pargana Idrakpur.	591 10 6	Whole	....	Purna Chandra Chakraborty and others.	..	56 12 9	..
1930	Zemindari share 2 annas, pargana Idrakpur.	536 8 8	Do.	....	Ditto ..	..	67 14 9	..
1932	Zemindari share 3 annas, pargana Idrakpur.	986 6 6	Do.	....	Ditto ..	..	127 13 2	..
2702	Zemindari share 2as. 15g., pargana Uttar Shahabazpur.	1,255 1 8	Do.	....	Hari Mohan Ray Chaudhury and others.	..	368 14 6	..
2748	Taluk Durga Gangeswar, pargana Uttar Shahabazpur.	1,037 11 2	..	8 annas share covered by separate account No. 1 and 2as. 13g. 1c. 1kt. share covered by separate account No. 2 will be sold. All other shares than that specified will be excluded from sale.	Probhat Chandra Ray and others.	691 12 10	..	433 13 4
2754	Taluk Durgaram, pargana Uttar Shahabazpur.	881 10 0	Whole	8 annas residuary and 8 annas share covered by separate account No. 1 will be sold.	Brindaban Chandra Nath and others.	..	438 11 4	..

Tauzi No.	Name of mahal and pargana.	Sadar jama of whole estate.	Whether the whole estate is to be sold.	If only a share is to be sold, specification of such share or shares.	Names of proprietors of property to be sold.	If only a share is to be sold, the sadar jama of such share.	If the whole estate is to be sold, the arrears due from it.	If only a share is to be sold, the arrears due from it.
1	2	3	4	5	6	7	8	9
		Rs. a. p.				Rs. a. p.	Rs. a. p.	Rs. a. p.
3029	Taluk Sriram Sen, pargana Uttar Shahabazpur.	784 12 11	Whole	....	Dwaraka Nath Sarkar.	..	294 4 9	..
3256	Zemindari share 2 annas, pargana Ratandi Kalikapur.	3,154 6 9	Do.	13as. 6g. 2c. 2kt. residuary and 2as. 13g. 1c. 1kt. share covered by separate account No. 1 will be sold.	Abdul Kader Chaudhury and others.	..	2,198 13 2	..
3257	Zemindari share 4 annas, pargana Ratandi Kalikapur.	6,308 12 0	..	2as. 15g. share covered by separate account No. 5 will be sold. All other shares than that specified will be excluded from sale.	Hiran Kumar Sen Ray Chaudhury and others.	1,084 5 4	..	336 8 1
3258	Zemindari share 4 annas, pargana Ratandi Kalikapur.	6,308 12 0	..	1a. 16g 2c. 2kt. share covered by separate account No. 5 and 3as. 3g. 3c. share covered by separate account No. 6 will be sold. All other shares than that specified will be excluded from sale.	Tara Prosanna Guha and others.	1,079 10 7	..	1,101 0 5
3266	Zemindari share 3 annas, pargana Shahajadpur.	857 13 4	Whole	....	Kali Kumar Ganguly, common manager.	..	834 12 3	..
3322	Taluk Bahauddin Hoshamoddin, pargana Saistanagar.	1,008 0 0	Do. ..	....	Sri Charan Chatterji and others.	..	70 13 6	..
3558	Zemindari, tappa Sultanabad.	23,128 4 3	..	1a. 5g. 1c. 1kt. 19til 2c. 3kag residuary and 13g. 3c. 1kt. 3 til 2c. 2kag share covered by separate account No. 18 will be sold. All other shares than that specified will be excluded from sale.	Mahammad Faizuddin Chaudhury and others.	2,807 7 10	..	580 5 10
3834	Zemindari share 6¼ gandas, pargana Selimabad.	1,830 12 0	..	10 annas residuary share will be sold. All other shares than that specified will be excluded from sale.	Rajendra Nath Chakraborty and others.	1,144 4 0	..	336 7 7
3836	Zemindari share 7 gandas, pargana Selimabad.	2,064 11 0	..	10as. 13g. 1c. 1kt. residuary share will be sold. All other shares than that specified will be excluded from sale.	Mahendra Nath Mitra and others.	1,376 7 0	..	268 6 0
3841	Zemindari share 2as 17½g., pargana Selimabad.	17,076 2 6	..	5as. 6g. 2c. 2kt. residuary share will be sold. All other shares than that specified will be excluded from sale.	Kumar Satya Mohan Ghoshal Bahadur and others.	5,992 0 11	..	2,853 2 11
3843	Zemindari share 13 gandas, pargana Selimabad.	3,593 6 8	..	8 annas share covered by separate account No. 1 will be sold. All other shares than that specified will be excluded from sale.	Haran Chandra Sen, receiver.	1,796 11 4	..	1,187 4 5
3849	Zemindari share 9½ gandas, pargana Selimabad.	2,924 3 11	Whole	....	Kaseswari Chaudhurani.	..	3,201 4 0	..
3865	Zemindari share 10as. 13½g., tappa Abdullapur.	2,366 10 0	..	7as. 9g. 2c. 1kt. 12til residuary share will be sold. All other shares than that specified will be excluded from sale.	Nibaran Chandra Banik and others.	1,106 7 11	..	247 5 7
4534	Char Sharikal, pargana Jazira.	3,441 11 3	Whole	....	A. M. Paruk and others.	..	1,274 11 3	..
4539	Rangaball Abad, pargana Chandradvip.	19,068 0 0	Do. ..	....	Bimala Charan Guha, receiver.	..	1,500 0 0	..
4575	Char Baral Karan, pargana Selimabad.	541 0 0	Do. ..	....	Kumar Satya Mohan Ghoshal Bahadur and others.	..	480 2 0	..
4605	Char Samasdi Baligao, pargana Saistanagar.	2,197 0 0	Do. ..	....	Satish Chandra Das and others.	..	742 0 2	..
4622	Char Kusangal, pargana Azimpur.	647 0 0	Do. ..	....	Syama Charan Sarkar.	..	300 0 0	..

Tauzi No.	Name of mahal and pargana.	Sadar jama of whole estate.	Whether the whole estate is to be sold.	If only a share is to be sold, specification of such share or shares.	Names of proprietors of property to be sold.	If only a share is to be sold, the sadar jama of such share.	If the whole estate is to be sold, the arrears dues from it.	If only a share is to be sold, the arrears due from it.
1	2	3	4	5	6	7	8	9
		Rs. a. p.				Rs. a p	Rs. a. p.	Rs. a. p.
4625	Dari Char Gazipur, pargana Selimabad.	2,357 0 0	Whole ..	....	Kumar Satya Mohan Ghoshal Bahadur and others.	..	2,221 8 11	..
4629	Char Tengra Khali, pargana Selimabad.	685 0 0	Do. ..	....	Rajani Nath Ukil ..	..	575 0 0	..
4646	Purba Char Titia, pargana Ratandi Kalikapur.	10,122 0 0	Do. ..	....	Bhupendra Nath Sen Ray Chaudhury and others.	..	20,999 0 0	..
4651	Char Madhabroy 1st Takta, pargana Azimpur.	871 0 0	Do ..	....	Tarak Chandra Datta Chaudhury and others.	..	171 7 0	..
4688	Char Jahapur, pargana Jahapur.	4,999 0 0	Do. ..	....	Alfatannessa Khatun and others.	..	3,078 12 0	..
4734	Char Shachilapur Kistakati, pargana Selimabad.	996 0 0	Do. ..	....	Kamar Satya Mohan Ghoshal Bahadur and others.	..	906 0 0	..
4751	Char Lakhami Bardhan, pargana Chandradvip.	627 0 0	Do. ..	....	Profulla Kumar Ray Chaudhury and others.	..	250 0 0	..
4757	Char Madanpura, pargana Ratandi Kalikapur.	2,020 0 0	Do ..	....	Abinash Chandra Guha Chaudhury others.	..	34 6 1	..
4793	Char Nepattashi, pargana Jazira.	640 6 0	Do. ..	....	Bomkesh Chatterjee and others.	..	395 4 0	..
4873	Taluk Ram Jagannath Ray and others, pargana Bazorgomedpur.	2,842 8 2	Do. ..	12 annas residuary, 2 annas share covered by separate account No. 1 and 2 annas share covered by separate account No. 2 will be sold.	Radha Charan Bose and others.	..	378 11 2	..
5202	Char Udaypur, pargana Jazira.	1,416 0 0	..	8 annas residuary share will be sold. All other shares than that specified will be excluded from sale.	Tara Prosanna Guha	708 0 0	..	602 0 0
5209	Taluk Ramdeb Datta, mauza Shibpur, pargana Gopalpur Mirjanagar.	1,751 0 0	Whole	....	Ditto ..	..	1,236 0 0	..
5210	Taluk Ramdeb Datta, mauza Mahadebpur, pargana Gopalpur Mirjanagar.	760 0 0	Do. ..	....	Ditto ..	..	464 0 0	..
5220	Hazipur *alias* Majilpur, tappa Abdullapur.	806 0 0	..	9 as. 12 g. 2 c. 1 kt. ¼ dt. residuary and 17 g. 3 c. 1 dt. share covered by separate account No. 3 will be sold. All other shares than that specified will be excluded from sale.	Gyasuddin Ahmed Chaudhury and others.	529 13 4	..	478 2 0
6054	Char Kachapia, pargana Ratandi Kalikapur.	1,680 0 0	Whole	....	Abdul Kader Chaudhury and others.	..	845 3 6	
6080	Taluk Howla Anantaram Nag, pargana Bazorgomedpur.	729 15 9	Do. ..	....	Abinash Chandra Banerjee, trustee.	..	422 13 6	
6102	Taluk Madhabram Datta, kismat Ramnagar, pargana Bazorgomedpur.	761 14 3	Do. ..	....	Rajendra Nath Das and others.	..	300 0 0	..
6117	Osat Taluk Kebal Raj Pran, pargana Bazorgomedpur.	1,115 6 0	....	8 as. 15 g. residuary share will be sold. All other shares than that specified will be excluded from sale.	Sanad Kumar Banerjee and others.	609 14 8	..	32 0 7
6345	Surplus accretion to Jahapur, pargana Jazira.	1,567 0 0	Whole	....	Syed Bahauddin Ahmed and others.	..	594 0 0	..
6358	Surplus accretion to Azimpur and Andharmanik, pargana Azimpur.	521 0 0	Do. ..	....	Kaliprosanna Datta Chaudhury and others.	..	234 4 4	..
6410	Surplus accretion to Shakuchia, pargana Abdullapur.	1,042 0 0	Do. ..	....	Shajeda Khatun Chaudhurani and others.	..	200 0 0	..

Tauzi No.	Name of mahal and pargana.	Sadar jama of whole estate.	Whether the whole estate is to be sold.	If only a share is to be sold, specification of such share or shares.	Names of proprietors of property to be sold.	If only a share is to be sold, the sadar jama of such share.	If the whole estate is to be sold, the arrears due from it.	If only a share is to be sold, the arrears due from it.
1	2	3	4	5	6	7	8	9
		Rs. a. p.				Rs. a. p.	Rs. a. p.	Rs. a. p.
6460	Zemindari Gaurinath Ray, share 1 anna, pargana Aurangpur.	897 6 5	Whole	....	Durga Ratan Ray Chaudhury and others.	..	422 10 4	..
6571	Surplus accretion to Bagura-Alekanda, pargana Chandradvip.	857 0 0	Do. ..	....	Ramani Mohan Ray Chaudhury and others.	..	326 9 8	..
6672	Surplus accretion to mauza Baniari, pargana Selimabad.	1,156 0 0	Do. ..	....	Saroj Kumar Bose, common manager.	..	633 0 0	..
6674	Surplus accretion to Raghunathpur, pargana Selimabad.	1,688 0 0	Do. ..	....	Ditto ..	..	933 0 0	..
6751	Taluk Nara Narain Ghose, pargana Balarampur-Sujabad.	1,529 0 3	Do. ..	4 annas residuary and 12 annas share covered by separate account No. 1 will be sold.	Shananda Chandra Shaha Chaudhury.	..	1,286 13 0	..
7063	Taluk Mahammad Yusuf, pargana Bazorgomedpur.	563 12 0	Do. ..	....	Mahammad Yusuf..	..	220 13 0	..
7176	Taluk Rajendra Nath Chakraborty, pargana Chandradvip.	1,687 9 8	..	8 annas residuary share will be sold. All other shares than that specified will be excluded from sale.	Kiran Chandra Charakborty and others.	843 12 8	..	470 10 6
7177	Taluk Jogendra Nath Chakraborty, pargana Chandradvip.	843 12 10	Whole	....	Jogendra Nath Chakraborty.	..	570 10 3	..
7178	Taluk Sukumari Debi Chaudhurani, pargana Chandradvip.	843 12 10	Do. ..	....	Sukumari Devi Chaudhurani.	..	313 12 2	..
7212	Taluk Satish Chandra Bose, pargana Bazorgomedpur.	1,133 7 3	Do. ..	....	Satish Chandra Bose, executor.	..	158 9 4	..
7213	Taluk Probha Moyee Guha, pargana Bazorgomedpur.	509 12 9	Do. ..	....	Probha Moyee Guha	..	33 4 2	..
7214	Taluk Monoranjan Ghose, pargana Bazorgomedpur.	509 12 9	Do. ..	....	Monoranjan Ghose Chaudhury and others.	..	122 5 11	..

The above estates are being advertised for sale for the instalments of revenue which were due on or before the 30th Agrahayan, 1341 B.S., of which the latest date of payment was 12th January 1935.

Barisal, the 26th February 1935. MD. MAHMUD, Addl. Collector.

Notification A.

NOTICE is hereby given, under sections 6 and 13, Act XI of 1859, that the undermentioned estates and shares of estates in the district of Dinajpur will be put up for sale at the office of the Collector of that district on the 26th March 1935, at 12 noon, for arrears of revenue and other demands which by law are realisable as arrears of land revenue.

When in columns, 5, 7 and 9 of the followibg statement it is stated that only a share is to be sold, it is to be understood that a separate account is kept for that share :—

Tauzi No.	Name of mahal and pargana.	Sadar jama of whole estate.	Whether the whole estate is to be sold.	If only a share is to be sold, specification of such share or shares.	Names of proprietors of property to be sold.	If only a share is to be sold, the sadar jama of such shares.	If the whole estate is to be sold, the arrears due from it.	If only a share is to be sold, the arrears due from it.
1	2	3	4	5	6	7	8	9
		Rs. a. p.				Rs. a. p.	Rs. a. p.	Rs. a. p.
47	Mahal Loka, pargana Khalsi.	4,466 8 0	No ..	1 a. 8 g. 1 c. 2 kt. 1 dt., separate account No. 4.	Shibani Debi, guardian for minor sons Karuna Kanta Rai and another.	391 10 7	..	97 2 6
				1 a. 9 g. 2 c. 1 kt. 1 dt. 2 job, separate account No. 12.	Indumati Debi and others.	407 15 8	..	101 0 0
				2 as. 18 g. 2 dt. 2 job. All other shares 13 as. 1 g. 3 c. 2 kt. 1 job, will be excluded from sale.				
49	Mahal Saidpur, pargana Gilahabari.	2,176 16 1	Yes ..	....	Bibi Isamon Nesa Chaudhurani.	..	590 0 0	..
50	Mahal Kamarpara, pargana Sarhatta.	2,147 11 8	No ..	1 a. 15 g. 2 c. 2 dt., separate account No. 2.	Shibani Debi, guardian of minor sons Karuna Kanta Rai and another.	238 11 0	..	76 15 0
				2 as. 1 g. 1 c. 2 kt. 2 dt. 1 job, separate account No. 7.	Indumati Debi and others.	278 6 7	..	90 0 0
				3 as. 17 g. 1 dt. 1 job. All other shares, 12 as. 2 g. 3 c. 2 kt. 1 dt. 2 job, will be excluded from sale.				
51	Mahal Bishnupur, pargana Gilahabari.	2,159 7 9	No ..	2 as. 13 g. 1 c. 1 kt., separate account No. 4.	Ditto ..	359 14 7	..	97 0 0
				2 as. 13 g. 1 c. 1 kt., separate account No. 5.	Bhobatosh Bandopadhyaya and another.	359 14 7	..	99 0 0
				5 as. 6 g. 2 c. 2 kt. All other shares, 10 as. 13 g. 1 c. 1 kt., will be excluded from sale.				
52	Mahal Durgapur, pargana Kardaha.	6,472 5 7	No ..	2 as. 13 g. 1 c. 1 kt., separate account No. 5. All other shares, 13 as. 6 g. 2 c. 2 kt., will be excluded from sale.	Indumati Debi and others.	1,078 11 7	..	202 0 0
58	Mahal Faijullapur, pargana Rajnagar	974 14 10	No ..	5 as. 5g. residuary share	Khaliluddin Ahmed Chaudhury and others.	319 14 5	..	87 0 0
				8 as. 2 c. 2½ dt., separate account No. 1.	Mahidur Rahaman Chaudhuri.	480 3 2	..	131 15 11
				13 as. 5 g. 2 c. 2½ dt. All other shares, 2 as. 14 g. 1 c. 6½ dt. will be excluded from sale.				
69	Mahal Narayanpur, pargana Salbari.	5,578 6 6	No ..	6 as. 10 g. residuary share. All other shares, 9 as. 10 g., will be excluded from sale.	Girija Ballav Rai Chaudhuri.	2,266 2 6	..	612 10 0
96	Mahal Gobindapur, pargana Santosh.	3,698 10 8	Shares mentioned in column 5 will be put up to sale together.	8 annas residuary share	Khatema Saifuddin Chaudhury, matwali proprietor.	1,849 5 4	..	482 15 10
				8 annas, separate account No. 1.	Muhammed Esartulla Chaudhury, guardian of minor matwali proprietor Sadekuddin Ahmed Chaudhuri.	1,849 5 4	..	519 15 10

Tauzi No.	Name of mahal and pargana.	Sadar jama of whole estate.	Whether the whole estate is to be sold.	If only a share is to be sold, specification of such share or shares.	Names of proprietors of property to be sold.	If only a share is to be sold, the sadar jama of such shares.	If the whole estate is to be sold, the arrears due from it.	If only a share is to be sold, the arrears due from it.
1	2	3	4	5	6	7	8	9
		Rs. a. p.				Rs. a. p.	Rs. a. p.	Rs. a. p.
133	Mahal Palashi, pargana Gilahabari.	1,696 12 7	No ..	8 annas residuary share	Mukunda Chandra Datta Chaudhuri and others.	848 6 3	..	138 0 0
				2 annas, separate account No. 2.	Munshi Amir Hossain Talukdar and others.	212 1 7	..	33 15 10
				10 annas.				
				All other shares, 6 annas, will be excluded from sale.				
137	Mahal Bahala, pargana Bijanagar.	4,832 0 0	No ..	2 as. 13 g. 1 c. 1 kt., separate account No. 5.	Indumati Debi and others.	805 11 6	..	217 0 0
				All other shares, 13 as. 6 g. 2 c. 2 kt., will be excluded from sale.				
143	Mahal Panchanon, pargana Debikote.	1,947 10 0	Yes ..	....	Panchanon Nandi Chaudhuri.	..	535 0 0	..
145	Mahal Binnakuri, pargana Deora.	4,761 0 10	No ..	12 annas residuary share	Kumar Krishna Nandi Chaudhury and others.	3,570 12 8	..	896 11 8
				All other shares, 4 annas, will be excluded from sale.				
162	Mahal Gakul, pargana Gilahabari.	2,893 2 6	No ..	6 as. 6 g. 2 c. 2 kt. residuary share.	Biman Chandra Datta Munshi and another.	1,145 3 3	..	261 10 1
				All other shares, 9 as. 13 g. 1 c. 1 kt., will be excluded from sale.				
170	Mahal Mahattore, pargana Bajitpur.	1,879 12 0	No ..	6 as. 6 g. 2 c. residuary share.	Surendra Narayan Chaudhury.	743 1 5	..	200 15 11
				All other shares, 9 as. 13 g. 2 c., will be excluded from sale.				
172	Mahal Bhandardaha, pargana Dehatta.	2,392 5 5	Yes ..	....	Kshirode Kanta Sen, Pleader Receiver on behalf of matwalli Md. Yusuf Chaudhury.	..	479 0 0	..
181	Mahal Galahar, pargana Deora.	1,612 13 0	No	5 as. 4 p., separate account No. 2.	Chandra Sekhar Das Deb Barma and another.	537 9 8	..	158 0 0
				All other shares, 10 as. 8 p., will be excluded from sale.				
189	Mahal Panchsala, pargana Bihinagar.	4,519 11 0	No	8 annas residuary share	Brojo Dulal Dhar and others.	2,259 13 6	..	586 15 10
				All other shares, 8 annas, will be excluded from sale.				
197	Mahal Malancha, pargana Gilahabari.	3,349 7 3	Yes	....	Mohini Mohan Bandopadhyaya and others.	..	370 9 0	..
198	Mahal Inatpur, pargana Gilahabari.	1,745 3 6	No	3 annas residuary share	Mahammed Raisuddin Chaudhury and others.	327 3 8	..	79 1 9
				5 as. 6 g. 2 c. 2 kt., separate account No. 2.	Daimuddin Chaudhury and others.	581 11 10	..	157 0 0
				7 as. 6 g. 2 c. 2 kt., separate account No. 3.	Barada Kanta Gangopadhyaya and another.	799 14 3	..	217 0 0
				15 as. 13 g. 1 c. 1 kt.				
				All other shares, 6 g. 2 c. 2 kt., will be excluded from sale.				
206	Mahal Kulahari, pargana Sasbir.	4,590 9 8	No	4 as. 5 g. 1 c. 1 kt., separate account No. 2.	Bishnupada Chaudhury and another.	1,224 2 7	..	331 15 0
				All other shares, 11 as. 14 g. 2 c. 2 kt., will be excluded from sale.				
216	Mahal Gobindapur, pargana Panjra.	4,083 12 3	No	8 annas, separate account No. 1.	Khirode Behari Saha and others.	2,041 14 2	..	533 0 0
				All other shares, 8 annas, will be excluded from sale.				
227	Mahal Jotebari, pargana Sultanpur.	7,189 11 4	No	8 annas residuary share	Chandra Nath Chatterjee.	3,594 13 8	..	473 15 8
				All other shares, 8 annas, will be excluded from sale.				
234	Mahal Farakkabad, pargana Bijanagar.	2,616 10 0	Yes	....	Shoradindu Nath Palit and others.	..	774 0 0	..
237	Mahal Daulatpur, pargana Rajnagar.	4,660 8 1	Yes	....	Niyamatulla Chaudhury, matwalli.	..	1,333 0 0	..

Tauzi No.	Name of mahal and pargana.	Sadar jama of whole estate.	Whether the whole estate is to be sold.	If only a share is to be sold, specification of such share or shares.	Names of proprietors of property to be sold.	If only a share is to be sold, the sadar jama of such shares.	If the whole estate is to be sold, the arrears due from it.	If only a share is to be sold, the arrears due from it.
1	2	3	4	5	6	7	8	9
		Rs. a. p.				Rs. a. p.	Rs. a. p.	Rs. a. p.
249	Mahal Haribangshapur, pargana Deora.	1,615 11 5	Yes	....	Jadav Lal Jhan Chakravarty.	..	486 11 4	..
257	Mahal Mosleyuddin, pargana Gilahabari.	921 7 5	Yes	....	Mosleyuddin Chaudhury.	..	258 0 0	..
266	Mahal Hajipur, pargana Lalbari Khalisa.	1,559 13 5	No	12 as. 7 g. 2 c. residuary share. All other shares, 3 as. 12 g. 2 c., will be excluded from sale.	Kali Kinkar Nag and others.	1,206 7 0	..	311 2 6
271	Mahal Raysali, pargana Kharail.	4,649 11 8	No ..	6 annas, separate account No. 1. 2as. 10g., separate account No. 3. 8as. 10g. All other shares, 7as. 10g., will be excluded from sale.	Chandra Nath Chatterjee and another. Bibhuti Bhushan Bhattacherjee and others.	1,743 10 5 726 8 4	.. ..	473 0 0 196 10 11
278	Mahal Debnathpur, pargana Deora.	3,275 10 0	No ..	7as. 13g. 2c. residuary share. 1a. 3g. 2kt. 3job, separate account No. 2. 8as. 16g. 2c. 2kt. 1dt. All other shares, 7as. 3g. 1c. 2dt., will be excluded from sale.	Prafulla Mayee Debi and others. Protap Chandra Khasnavis.	1,570 7 1 237 6 9	.. ..	400 0 0 61 7 9
310	Mahal Chakmohesh, pargana Santosh.	1,448 10 2	Shares mentioned in column 5 will be put up to sale together.	8 annas residuary share 8 annas, separate account No. 1.	Saifuddin Chaudhury Motwalli. Mahammed Esartulla Chaudhury guardian for minor proprietor and motwalli Sadekuddin Ahmed Chaudhury.	724 5 1 724 5 1	.. ..	199 15 10 198 15 10
316	Mahal Rajibpur, pargana Panjra.	884 11 8	Yes ..	....	Kiron Bala Sinha and another, guardians on behalf of Amrita Gopal Sinha and another.	..	167 15 8	..
320	Mahal Mallapara, pargana Bihinagar.	4,212 12 0	Yes ..	....	Emajuddin Ahmed Chaudhury and others.	..	916 0 1	..
336	Mahal Gunshi, pargana Sultanpur.	7,746 10 8	No ..	5as. 6g. 2c. 2kt. residuary share. All other shares, 10as. 13g. 1c. 1kt., will be excluded from sale.	Narain Kumar Chaudhury, proprietor and guardian of minor Srish Kumar Chaudhury.	2,582 3 6	..	696 10 5
345	Mahal Raghabendrapur, pargana Fulbari.	3,079 15 0	No ..	12 annas residuary share All other shares, 4as., will be excluded from sale.	Monindra Chandra Bakshi and others.	2,310 0 7	..	627 8 10
350	Mahal Basbhanga, pargana Salbari.	1,419 1 0	Yes ..	....	Dinabandhu Das and others.	..	441 0 0	..
358	Mahal Ranipur, pargana Rajnagar.	581 4 0	Yes ..	....	Joynul Haq Chaudhury and another.	..	60 0 0	..
377	Mahal Punatti, pargana Nurpur.	908 15 9	Shares mentioned in column 5 will be put up to sale together.	8 annas residuary share 8 annas, separate account No. 1.	Ashutosh Guha and others. Harish Chandra Das Deb Barman, sebait of idols Durga Thakurani, etc.	454 7 10 454 7 11	.. ..	122 15 10 123 0 0
382	Mahal Dilkarpur, pargana Gilahabari.	1,072 11 8	No ..	8 annas residuary share All other shares, 8 annas, will be excluded from sale.	Purnendu Kumar Banerjee and others.	536 5 10	..	145 15 10

Tauzi No.	Name of mahal and pargana.	Sadar jama of whole estate.	Whether the whole estate is to be sold.	If only a share is to be sold, specification of such share or shares.	Names of proprietors of property to be sold.	If only a share is to be sold, the sadar jama of such shares.	If the whole estate is to be sold, the arrears due from it.	If only a share is to be sold, the arrears due from it.
1	2	3	4	5	6	7	8	9
		Rs. a. p.				Rs. a. p.	Rs. a. p.	Rs. a. p.
399	Mahal Subarnakhuli, pargana Panjra.	2,614 6 6	No ..	4 annas share of Subarnakhuli group of mauza, separate account No. 1.	Chhakumani Dasya	205 11 4	..	55 11 8
				8 annas share of Subarnakhuli group of mauza, separate account No. 2.	Haris Chandra Das Deb Barma.	411 6 10	..	111 7 6
				4 annas share of Subarnakhuli group of mauza, separate account No. 4.	Chin Moyee Chaudhurani and another.	205 11 5	..	55 11 9
				16 annas. All other shares, 16 annas share of Hosainpur group of mauza and 8 annas 16 gds. $1\frac{247}{320}$ dt., i.e., 16 annas share of Bishnuganj-Khamar group of mauzas will be excluded from sale.				
404	Mahal Haragobindapur, pargana Gilahabari.	3,349 7 4	No ..	6 as. 10 gds. 1 kt. 2½ dt. residuary share. All other shares, 9 as. 9 gds. 3 c. 1 kt. ½ dt., will be excluded from sale.	Nasaruddin Chaudhury and others.	1,362 3 11	..	172 7 8
451	Mahal Bhabki, pargana Panjra.	1,524 0 6	No ..	8 annas residuary share All other shares, 8 annas, will be excluded from sale.	Jotindra Narayan Ghose and others.	762 0 3	..	100 0 0
468	Mahal Chandipur, pargana Gilahabari.	1,745 3 6	Yes ..	....	Dhruba Nath Pal and others.	..	471 15 8	..
469	Mahal Shyampur, pargana Gilahabari.	1,745 3 6	No ..	5 annas residuary share	Mahammed Raisuddin Chaudhury and others.	545 6 1	..	88 12 7
				5 as. 6 gds. 2 c. 2 kt., separate account No. 2.	Daimuddin Chaudhury and others.	581 11 10	..	157 0 0
				5 as. 6 gds. 2 c. 2 kt., separate account No. 3.	Barada Kanta Gangopadhyaya and another.	581 11 10	..	156 15 10
				15 as. 13 gds. 1 c. 1 kt. All other shares, 6 gds. 2 c, 2 kt., will be excluded from sale.				
484	Mahal Jalali, pargana Salbari.	806 9 3	Shares mentioned in column 5 will be put up to sale together.	16 annas share of Boalia Araji group of mauzas residuary share.	Brojendra Lal Jhan Chakravorty and others.	275 8 5	..	53 3 10
				16 annas share of Kakdubi group of mauzas, separate account No. 1.	Kissori Lal Jhan Chakraverty and others.	531 0 10	..	140 2 11
497	Mahal Amjam Khore, pargana Dehatta.	1,075 7 0	Yes ..	....	Promotho Nath Majumder and others.	..	258 15 0	..
506	Mahal Sultanpur, pargana Lalbari Khalisa.	991 2 5	No ..	12as. 7g. 2c. residuary share. All other shares, 3as. 12g. 2c., will be excluded from sale.	Kalikinkar Nag and others.	766 9 5	..	182 9 5
507	Mahal Dalaikota, pargana Lalbari Khalisa.	536 3 1	Yes ..	....	Akhoy Lal Saha and others.	..	150 15 10	..
608	Mahal Chandmukh, pargana Debikote.	673 0 0	Yes ..	....	Sarashi Mohan Ghosh and others.	..	65 7 9	..
785	Mahal Khadimpur, pargana Mohoshow.	1,261 10 10	No ..	4as. 19g. 3c. $\frac{4}{13}$ kt. residuary share.	Alefuddin Hussen Chaudhury and others.	210 4 9	..	57 2 6
				2annas, separate account No. 2.	Jagadish Chandra Rai and others.	157 11 4	..	42 13 11
				3as. 6g. 2c. 2kt., separate account No. 3.	Sarifuddin Hossain Chaudhury and others.	262 13 7	..	71 7 4
				1 anna 10g., separate account No. 4.	Ditto ..	118 4 3	..	32 2 2
				1a. 10g. 2 $\frac{0}{13}$ kt., separate account No. 5.	Alefuddin Hussen and others.	302 4 5	..	82 2 5
				18as. 6g. 2c. 2kt. All other shares, 2as. 13g. 1c. 1kt., will be excluded from sale.				

Tauzi No.	Name of mahal and pargana.	Sadar jama of whole estate.	Whether the whole estate is to be sold.	If only a share is to be sold, specification of such share or shares.	Names of proprietors of property to be sold.	If only a share is to be sold, the sadar jama of such shares.	If the whole estate is to be sold, the arrears due from it.	If only a share is to be sold, the arrears due from it.
1	2	3	4	5	6	7	8	9
		Rs. a. p.				Rs. a. p.	Rs. a. p.	Rs. a. p.
809	Mahal Akhira, pargana Santosh.	604 11 3	Yes ..	....	Kiran Bala Sinha and another, guardians on behalf of Amrita Gopal Sinha and another.	..	154 15 10	..
877	Mahal Gopalpara, pargana Fulbari.	3,184 13 0	No ..	6as. 6g. 2c. 2kt. residuary share. All other shares, 9as. 13g. 1c. 1kt, will be excluded from sale.	Biman Chandra Datta Munshi.	1,260 12 2	..	287 14 4
889	Mahal Hashimpur, pargana Panjra.	852 13 2	No ..	8as. 2g. 3c. 1dt. residuary share.	Zahural Hoque Chaudhury and another.	433 13 1	..	26 5 3
				3as. 6g. 2c. 2kt., separate account No. 1.	Tahsin Ali Chaudhury and others.	177 10 9	..	34 0 0
				2as. 5g. 1c. 1dt., separate account No. 4.	Abdur Rasid Chaudhury and others.	120 10 8	..	22 0 0
				13as. 14g. 2c. 2kt. 2dt. All other shares, 2as. 5g. 1c. 1dt., will be excluded from sale.				
893	Mahal Hazratpur, pargana Kardaha.	2,356 10 8	No ..	8 annas, separate account No. 1. All other shares, 8 annas, will be excluded from sale.	Padmini Mohan Datta Gupta and others.	1,178 5 4	..	318 0 0
900	Mahal Naosara, pargana Mahoshow.	573 8 7	Share mentioned in column 5 will be put up to sale together.	12 annas residuary share.	Romesh Chandra Jhan Chakravarty and others.	430 2 5	..	85 15 5
				4 annas, separate account No. 1.	Promila Sundari Debi and another.	143 6 2	..	29 0 0
910	Mahal Madhabpara, pargana Rajnagar.	1,817 0 11	Yes ..	....	Hazi Munshi Mahtabuddin Chaudhury and others.	..	105 6 6	..
917	Mahal Durgapur, pargana Deora.	2,250 11 1	Yes ..	....	Jadavlal Chakravorty and others.	..	605 3 10	..
923	Mahal Kawarpur, pargana Nurpur.	1,323 11 10	No ..	10 as. 13 g. 1 c. 1 kt. residuary share. All other shares. 5 as. 6 g. c. 2 kt., will be excluded from sale.	Hemanta Bala Debi, guardian for minors Kamalacharan Sen and others.	882 7 11	..	267 15 11
933	Mahal Balupara, pargana Kardaha.	1,211 0 5	Yes ..	....	Murari Mohan Chaudhury and others.	..	329 8 2	..

This notice is issued in respect of instalment of revenue due on or before the 30th Agrahyan, 1341 B.S., of which the latest date of payment was 12th January, 1935 A. D.

[ILLEGIBLE], *for* Collector.

Dinajpur, the 23rd February 1935.

Notification A.

NOTICE is hereby given, under sections 6 and 13, Act XI of 1859, that the undermentioned estates and shares of estates in the district of Rangpur will be put up for sale at the office of the Collector of that district on 25th March 1935, at 11 a.m., for arrears of revenue and other demands which by law are realisable as arrears of land revenue.

When in columns 5, 7 and 9 of the following statement it is stated that only a share is to be sold, it is to be understood that a separate account is kept for that share :—

Tauzi No.	Name of mahal and pargana.	Sadar jama of whole estate.	Whether the whole estate is to be sold.	If only a share is to be sold, specification of such share or shares.	Names of proprietors of property to be sold.	If only a share is to be sold, the sadar jama of such share.	If the whole estate is to be sold, the arrears due from it.	If only a share is to be sold, the arrears due from it.
1	2	3	4	5	6	7	8	9
		Rs. a. p.				Rs. a. p.	Rs. a. p.	Rs. a. p.
42 Rs.	Kazirhat, hisya 4 annas, pargana Chakle Kazirhat.	10,435 6 4	No ..	8 annas share of the estate.	Annada Prasad Sen for self and sebayet of Lakshmi Jonardan Thakur.	5,217 11 2	..	1,409 1 0
42/4	Ditto ..	10,435 6 4	No ..	2 annas share of the estate. All other shares besides that specified will be excluded from sale.	Majibor Rahman Choudhury and Jahar Ulla Shah Choudhury.	1,304 6 10	..	176 2 0
77	Magura O'goyraha, pargana Chakle Kazirhat Fatepur.	9,056 11 2	Whole	....	Puran Chand Nahata, Juan Chand Nahata.	..	2,454 7 9	..
82	Musapoalighat O'goyraha, pargana Chakle Kazirhat.	6,408 5 4	Do. ..	....	Raja Gopal Lal Roy Bahadur.	..	1,735 7 6	..
185	Kunja Sakpala, hisya 8 annas, parganas Kunja Sakpala, Bairighoraghat and Pogoil.	5,181 10 2	Do. ..	....	Ditto ..	..	1,743 7 6	..
248	Radha Krishnapur O'goyraha, pargana Andua.	9,839 5 1	Do. ..	....	Ditto ..	..	3,264 0 0	..
506	Kunja Sakpala, hisya 8 annas, parganas Althat, Kunja Sakpala, Bairighoraghat, and Pogoil.	5,181 10 1	Do. ..	....	Brindaban Chandra Roy Choudhury.	..	1,743 7 6	..

The abovementioned estates are being advertised for sale for instalments of revenue which were due on or before the 30th Agrahayan, 1341 B.S., of which the latest date of payment was 12th January 1935 A.D.

Rangpur, the 1st March 1935.

N. M. AYYAR, Collector.

Notification A.

NOTICE is hereby given, under sections 6 and 13 of Act XI of 1859, that the undermentioned estates and shares of estates in the district of Hooghly will be put up for sale at the office of the Collector of that district on the 25th March 1935, at 12 noon, for arrears of revenue and other demands which by law are realisable as arrears of land revenue.

When in columns 5, 7 and 9 of the following statement it is stated that only a share is to be sold, it is to be understood that a separate account is kept for that share :—

Tauzi No.	Name of mahal and pargana.	Sadar jama of the whole estate.	Whether the whole estate is to be sold.	If only a share is to be sold, specification of such share or shares.	Names of proprietors of property to be sold.	If only a share is to be sold, the sadar jama of such share.	If the whole estate is to be sold, the arrears due from it.	If only a share is to be sold, the arrears due from it.
1	2	3	4	5	6	7	8	9
		Rs. a. p.				Rs. a. p.	Rs. a. p.	Rs. a. p.
7/Res.	Silampur, pargana Silampur.	8,067 3 0	..	2 as. 13 gds. 1 k. 1 kt. share of the whole estate except mauza Garzi and 17 gds. 3 k. 1 dt. share of mauza Garzi.	Golak Behari Nandy and others.	1,145 6 4	..	788 11 7
16/1	Bighati, pargana Boro.	3,043 6 6	..	6 as. 7 gds. 2 k. share of mauza Rajyadharpur and 4 as. 7 gds. 2 k. share of mauzas Simla and Bighati.	Manindra Nath De and others.	896 4 10	..	210 13 10
26/Res.	Malikapur, pargana Balligori.	10,552 14 0	..	2 as. 8 gds. 3 k. share of mauza Haspur, 16 annas share of mauzas Balarampur, Mohonbati, Senpur and Malikapur, 8 annas share of Jotebanshi Samsherpur and Parbatipur, and 7 annas share of Neyamatpur, Tullan Pirijpur, Bhora Mollapur, Jote Krishna Das and Kalikapur.	Samarendra Nath Singh Roy and and others.	4,498 8 9	..	3,748 8 7
28/Res.	Nasipur, pargana Balligori.	3,492 0 3	..	8 annas ..	Ditto ..	1,746 0 8	..	673 5 3
33/Res.	Bahadurpur, pargana Balligori.	15,975 10 0	..	2 as. 3 gds. 1 k. 7 dt. 1 kag 15 til.	Chandi Prosad Singh Roy.	2,173 0 1	..	819 3 3
37/7	Hridoyrampur, pargana Chowmaha.	44,806 7 0	..	12 as. 16 gds. share of mauzas Balkunthapur, Hridoyrampur, Alaipur, Palsa, Katundi, Katundibahir, Jagannathpur, Kasijote, Narayanpur, Dulfa, Panchra, Paramanandapur, Maheshpurpotegopalpur, Maheshwarpur *alias* Dowarpur, Bhabanipur, Bansdarun, Bangalpur, Metaharchak, Sagrai, Bangalpurpote Ballavpur, Ballavipur, Jibanjote Natuapur, Baneswarpur, Ramkrishnapur, Belgachia, Kastagora, Amuila, Khanpur Gangarampur, Kanaipur Kismat, Chaitannabati Kismat Sangramjote, Dhontikri, Purandarpur Kismat, Chowhatta, Parameswaripur, Ruprajpur, Malikundi Kadipara, Ganeshpur, Chamanchak, Bashudebpat, Kristapur, Malikpur, Dadhibrahminpur and Raghunathpur.	Monohar Mukherji.	10,566 8 2	..	3,962 6 6
37/8	Ditto ..	44,806 7 0	..	12 as. 16 gds. share of mauzas Nachindanga, Laskhanpur, Prosadpur, Digribadey, Khagragachi, Panishehala, Bhagabotipur, Madhabjote, Jejur, Kasbapara, Nandanpur, Raktapara, Ankapara, Naiti, Jinpur, Som Sanda, Baro Sanda Samil Patahar, Hetampur, Pallagachi, Kanaipukuria, Istia, Raghunathpur, Radhaballavpur, Serampur Khordh *alias* Satghora and Sada Sivbati.	Mahendra Nath Mukherji.	10,036 7 0	..	3,697 12 0

Tauzi No.	Name of mahal and pargana.	Sadar jama of the whole estate.	Whether the whole estate is to be sold.	If only a share is to be sold, specification of such share or shares.	Names of proprietors of property to be sold.	If only a share is to be sold, the sadar jama of such share.	If the whole estate is to be sold, the arrears due from it.	If only a share is to be sold, the arrears due from it.
1	2	3	4	5	6	7	8	9
		Rs. a. p.				Rs. a. p.	Rs. a. p.	Rs. a. p.
37/9	Hridoyrampur, pargana Chowmahla.	44,806 7 0	..	12 as. 16 gds. share of mauzas Dhannyagacha, Paikpara, Bhagirathpur, Monoharpur, Sangram Chak, Anathpur, Amdhara *alias* Ghosa, Anantapur *alias* Chainpur, Anandapurbirija *alias* Paighatta, Barija *alias* Paighata, Bonwari, Bankajalkar, Barijajungalbar, Barijabakshitolla *alias* Jhankra Sarsa, Barijajalkar *alias* Kadamtala, Bhatpara, Chinney Chak, Bhairabpur, Sowta, Chingrigoria, Changgoria, Daulatchak *alias* Sudamchak, Govindapur, Gopalpur, Harinarayanpur, Hizli, Jayantipur, Jayantipur Jagannathpur Jalkar *alias* Kharija mauza, Kadamtolla, Kanalchak, Keyagoria, Keyagoriabundh, Khajemchak *alias* Ranga Metia Khejurdanga, Murokata, Mathura, Mirkuli *alias* Balitentulia, Palasi, Palangapur palkmajitta, Protappur, Ramdespur, Salua *alias* Basanbar, Suksitolla, Chainpur, Chainpur kismat, Tentulia and Daya.	Bhupendra Nath Mukherji.	10,667 4 0	..	4,600 0 0
37/10	Ditto ..	44,806 7 0	..	12 as. 16 gds. share of mauzas Ghatra, Kamdebpur, Kankra jole, Basubati and Narayanpur.	Monohar Mukherji as trustee to the estate.	4,100 0 0	..	1,538 0 0
44/1	Pandra, pargana Balia.	11,150 15 0	..	4 annas ..	Prodyat Kumar Mukherji.	2,787 12 11	..	936 3 3
44/2	Ditto ..	11,150 15 0		4 annas ..	Kalidas Mukherji and others.	2,788 2 0	..	1,180 0 0
47/ Res.	Sanchitara, pargana Pandua.	47,385 11 11	..	8 annas share of mauzas Dumurdaha and Charmadhusudanpur and 16 annas share of mauzas Saleswarpur, Haripur, Benodepur, Ekloki, Kismat Ekloki, Jaminbarijhaty, Patul, Kharija Khanpur, Daulatpur, Ramchandrapur Chakran, Kundhara Mathurpur, Kirtinagore, Payen, Akutipota, Jotekusai, Rampur, Manpara, Acharjyapur, Dakhinpara of Mahanad, Kagchipara, Rahimpurpara, Radha Krishto Neogy's Kharijaproja, Salukgorey, Kantalpara, Ghosepur, Ramanathpur, Ramnathpur, Sunia, Dattapoto, Kherojabad Duttabati, Sarkarpote, Ballabati, Baluhatihat Chandul, Bhaskur Gokulpur, Hat Chandul, Krishnajote, Chaltpara, Panchdewli, Depaldighi, Balaldighi, Ramakantapur, Nealy, Fateypur, Krishna Chandrapur, Lakmikantapur, Madanpur, Panchloi, Srimantapur, Reshena, Rampur *alias* Sahasrarampur, Dehati *alias* Srimukbati, Paranchapur, Paikpara, Lalitagore, Ramchandrapur, Brindhaberechak, Chongtarbundh, Naricha and Kusaljote.	Rajendra Nath Roy as receiver to the estate of Abani Nath Mukherji.	23,764 14 7	..	28,348 6 0
51	Paigachi, pargana Raipur.	502 7 6	Entire	....	Bhujendra Nath Biswas.	..	176 0 0	

Tauzi No.	Name of mahal and pargana.	Sadar jama of the whole estate.	Whether the whole estate is to be sold.	If only a share is to be sold, specification of such share or shares.	Names of proprietors of property to be sold.	If only a share is to be sold, the sadar jama of such share.	If the whole estate is to be sold, the arrears due from it.	If only a share is to be sold, the arrears due from it.
1	2	3	4	5	6	7	8	9
		Rs. a. p.				Rs. a. p.	Rs. a. p.	Rs. a. p.
54/ Res.	Thaipara, pargana Pandua.	1,006 1 0	..	8 as. 2 k. 3 kag 11 til 9 tilkag 10 tilganda share of mauzas Srirambati, Kanur, Nakuthan, Chanalhati, Gossainpur *alias* Monoharpur, Matukpur, Golagori, Idrakpur, Bhajanpur, Brahmapur, Isuragori, Ilampur, Purusattampur, Kabirhati, Magura and Balarampur Nijthaipara. 7 as. 8 gds. 2 k. 3 kag 16 til share of mauzas Sripala, Bagmaldan, Sainbona, Pachgora, Daihat, Achgori and Kalisanda.	Sourendra Nath Mittra and Anath nath Roy as receiver to the estate of Surendra Nath Mittra and others.	522 12 0	..	195 14 11
65/1	Nandigram, pargana Pandua.	1,975 9 0	..	4 as. 16 gds. ..	Shaikh Khoda Bux Mistry.	592 10 0	..	208 1 6
65/2	Ditto ..	1,975 9 0	..	4 as. 16 gds. ..	Ditto ..	592 10 0	..	220 4 0
68	Nokabati, pargana Chowmaha.	1,041 8 6	Entire	....	Provash Chandra Majumder and others.	..	408 8 6	..
72/ Res.	Gopalnagore, pargana Jahanabad.	2,917 11 2	..	8 as. 6 gds. 2 k. 2 kt. ..	Aditya Prosad Roy and others (auction-purchaser Sukumar Bose).	1,519 10 5	..	2,715 9 8
72/B	Ditto ..	2,917 11 2	..	4 as. 3 gds. 1 k. 1 kt. ..	Sukumar Bose, auction-purchaser.	759 13 0	..	1,212 3 3
77/1	Bandipur, pargana Bandipur.	14,781 4 0	..	2 as. 13 gds. 1 k. 1 kt.	Minor Amarjit Lal Chowdhury and three others. Guardian mother Padmabala Debi.	2,463 10 4	..	2,274 15 1
77/3	Ditto ..	14,781 4 0	..	2 as. 13 gds. 1 k. 1 kt.	Birendra Lal Chowdhury.	2,463 10 4	..	1,845 5 3
77/6	Ditto ..	14,781 4 0	..	17 gds. 3 k. 1 dt. ..	Ditto ..	821 4 0	..	730 0 1
82/1	Rampara, pargana Balia.	10,514 6 0	..	11 as. 8 gds. 2 k. ..	Kumud Prokash Ganguly and two others as trustees to the estate of late Maharaja Sir Jatindra Mohan Tagore, K.C.S.I.	7,517 15 3	..	2,812 13 3
86/ Res.	Ghaneshyampur, pargana Baligori.	4,275 12 0	..	8 annas	Samarendra Nath Singha Roy and others.	2,137 14 0	..	744 3 4
94/ Res.	Ramnarayanpur, pargana Baligori.	10,258 15 0	..	5 annas	Panna Lal Paramanik and another.	3,206 5 2	..	960 14 8
107/1	Hudabasudebpur, pargana Arsha.	9,099 11 0	..	3 as. 11 gds. 1 kt. 1 dt.	Murali Mohan Sen and others.	2,026 7 3	..	755 10 10
119	Hatikanda, pargana Hatikanda.	1,279 5 2	Entire	....	Birendra Lal Chowdhury and others.	..	1,049 2 9	..
122	Silampur, pargana Silampur.	701 0 0	Do. ..	....	Sashi Bhusan Sil and others.	..	186 4 3	..
126/ Res.	Ditto ..	2,107 11 0	..	17 gds. 3 k. 1 dt. share of mauza Gopalpur. 8 as. 6 gds. 2 k. 2 kt. share of mauza Kamalpur. 7 as. 4 gds. 1 k. 2 kt. 7 til share of mauza Dumurdaha. 12 as. 1 k. 1 kt. 1 dt. 1 job share of mauza Joypur. 7 as. 9 gds. 2 k. 1 kt. 1 dt. 2 job share of mauza Panchrokhi. 12 as. 6 gds. 2 k. 2 kt. share of mauza Sivarampur. 12 as. 13 gds. 2 kt. 2 dt. 2 job share of mauza Saraswatipur. 16 annas share of mauza Sadhubangali. 10 as. 18 gds. 1 k. 1 kt. share of mauza Dhokchora. 8 as. 17 gds. 3 k. 1 dt. share of mauza Boga.	Sourendra Nath Chatterji and others. Akhoy Kumar Sett. Suresh Chandra Roy.	987 6 10	..	82 12 5
127/ Res.	Ditto ..	776 15 6	..	10 as. 10 gds. 3 k. 1 kt. 19 til.	Subodh Kumar Mukherjee and others.	512 1 3	..	132 9 3

Tauzi No.	Name of mahal and pargana.	Sadar jama of the whole estate.	Whether the whole estate is to be sold.	If only a share is to be sold, specification of such share or shares.	Names of proprietors of property to be sold.	If only a share is to be sold, the sadar jama of such share.	If the whole estate is to be sold, the arrears due from it.	If only a share is to be sold, the arrears due from it.
1	2	3	4	5	6	7	8	9
		Rs. a. p.				Rs. a. p.	Rs. a. p.	Rs. a. p.
128	Dadpur, pargana Pownan.	512 9 4	Entire ..	....	Lala Nani Gopal Baboo and another.	..	191 2 1	..
140	Radhanagore, pargana Khosalpur.	3,101 14 0	Do. ..	....	Hemendra Nath Singh and others, sebaits of Brindabanjew Thakur.	..	1,708 14 5	..
150	Haripur, pargana Balia.	6,818 1 4	Do. ..	....	Kumud Prokash Ganguly and two others as trustees to the estate of late Maharaja Sir Jatindra Mohan Thakur, K.C.S.I.	..	2,545 0 7	..
2034	Sultanpur Char, pargana Pat Mahal.	938 7 9	Do. ..	....	Sm. Sukeshi Dasi	..	417 15 9	..
3497	Panchgachia, pargana Baligori.	1,163 13 6	Do. ..	....	Jnanendra Nath Singh Roy.	..	375 0 0	..
3498	Ditto ..	1,163 14 6	Do. ..	....	Promode Nath Singh Roy and others.	..	375 0 0	..
3499/ Res.	Jogomohanpur in Ghaneshyampur, pargana Baligori.	3,264 13 11	..	8 annas ..	Samarendra Nath Singha Roy and others.	1,632 5 11	..	600 0 0
3541/ Res.	Khorsaral, pargana Boro.	1,311 10 6	..	8 annas ..	Sm. Jogmaya Dassi and others.	655 13 0	..	108 5 4
3632/ Res.	Chutipur, pargana Chutipur.	1,383 2 4	..	13 as. 11 gds. 1 k. 2 kt. 14 til.	Sm. Charusila Debi and others.	1,173 4 4	..	55 4 11
3876/ 1.	Bakerbadarpur, pargana Kalkan.	5,715 10 7	..	8 annas ..	Amarendra Nath De as Administrator to the estate of Surendra Nath De and others.	2,858 0 4	..	1,848 0 2
3989/ A.	Muhammad Aminpur, pargana Muhammad Aminpur.	79,523 0 10	..	8 annas .. Separate account covers the 8 annas share of the whole estate minus 16 annas share of mauzas Nizampur, Goneshpur, Sahana and Sankhya.	Kumar Sarat Kumar Roy Bahadur.	39,397 4 0	..	12,300 2 11
4082/ Res	Kalupukuria, pargana Jahanabad.	13,518 0 0	..	2 as. 13 gds. 1 k. 1 kt. share of mauzas Ghesua and Basantapur. 1 a. 11 gds. share of Joykristopur.	Ratan Krishna Roy.	863 13 2	..	650 2 4
				15 gds. 3 k. 2 dt. share of Ghosepur.	Gobardhan Chatterjee.			
4082/ B.	Ditto ..	13,518 0 0	..	2 as. 13 gds. 1 k. 1 kt. share of mauzas Kalupukuria, Ghesua, Ghosepur, Debkhanda, Basantapur, Mohammadpur and Joykristopur.	Nakur Chandra Roy and others.	2,253 2 6	..	2,317 9 0
4082/ 1.	Ditto ..	13,518 0 0	..	2 as. 13 gds. 1 k. 1 kt. share of mauzas Kalupukuria, Debkhanda and Muhammadpur.	Sunil Kumar Hazra.	544 0 0	..	356 3 3
4086	Govindapur, pargana Jahanabad.	10,407 4 7	Entire	....	Monohar Lal Sil	..	3,806 8 7	..
	Temporarily-settled estates.							
	(Settled for 15 years with effect from 1st April 1922.)							
2025	Rampur Char, pargana Patmahal.	854 8 0	Entire	....	Khagendra Nanda Asram, Sebait of Brindaban Chandra Thakur.	..	491 12 0	..
2027	Krishnabati New Char, pargana Raipur.	2,050 7 0	Do. ..	....	Ditto ..	..	1,401 8 0	..
2035	Krishnabati Char, pargana Raipur.	1,639 0 0	Do. ..	....	Ditto ..	..	912 9 6	..
2092	Krishnabati Cherra Char, pargana Raipur.	1,996 8 0	Do. ..	....	Ditto ..	..	1,237 6 9	..

All shares other than that specified will be excluded from the sale.

These estates are being advertised for instalments of revenue which were due on or before the 30th Agrahayan, 1341 B. S., of which the latest date of payment was 12th January 1935.

Hooghly, the 25th February 1935.

[ILLEGIBLE], *for* Collector.

Notification A.

NOTICE is hereby given, under sections 6 and 13, Act XI of 1859, that the undermentioned estates and shares of estates in the district of Rajshahi will be put up for sale at the office of the Collector of that district on the 25th March 1935, at 12 noon, for arrears of revenue and other demands which by law are realizable as arrears of land revenue.

When in columns 5, 7 and 9 of the following statement it is stated that only a share is to be sold, it is to be understood that a separate account is kept for that share—

Tauzi No.	Name of mahal and pargana.	Sadar jama of whole estate.	Whether the whole estate is to be sold.	If only a share is to be sold, specification of such share or shares.	Names of proprietors of property to be sold.	If only a share is to be sold, the sadar jama of such share.	If the whole estate is to be sold, the arrears due from it.	If only a share is to be sold, the arrears due from it.
1	2	3	4	5	6	7	8	9
		Rs. a. p.				Rs. a. p.	Rs. a. p.	Rs. a. p.
222	Shibdebpara, pargana Tegachi.	2,515 9 0 Police— 25 10 0	No ..	Residuary—Seven annas and ten gandas share.	Maulvi Choudhury Md. Mazaharal Haque and others.	1,179 3 0 Police— 12 0 0	..	L. R.— 392 3 6
				S. A. No. 1—Two annas, ten gandas, one cora, 1½ danti and 10 6/31 jobs share.	Choudhury Fazlar Rahim Abu Ahmed and others.	396 3 6 Police— 3 14 6	..	L. R.— 68 2 6
				S. A. No. 2—Four annas share. (All other shares besides those specified will be excluded from the sale.)	Bibi Hafezatan Nessa Unmatan Fatema Chowdhurani.	628 14 0 Police— 6 7 0	..	L. R.— 213 13 0
230	Dehi Dhankora, pargana Tegachi.	4,556 15 0 Police— 10 11 0	No ..	S. A. No. 3—Two annas, one ganda, one cora, three kags and 17 41/180 tils share.	Bibi Taheratan Nessa Unmata Rafia Chowdhurani and others.	588 4 0 Police— 1 4 3	..	L. R.— 113 2 3
				S. A. No. 6—Two annas, nine gandas, one cora and two kags share.	Bibi Jamilatan Nessa and others.	703 6 0 Police— 1 9 0	..	L. R.— 230 15 0
				S. A. No. 7—Two annas, nine gandas, one cora, and two kags share.	Bibi Hafezatan Nessa Unnatan Fatema Chowdhurani.	703 8 0 Police— 1 10 0	..	L. R.— 241 15 0
				S. A. No. 8—One anna, one ganda, two coras, one kag and ten tils share.	Hazi Khandakar Maulvi Mahamed Mahasen Khan Bahadur and others.	307 13 0 Police— 0 11 0	..	L. R.— 105 12 0
				S. A. No. 9—One anna, one ganda, two coras, one kag and ten tils share. (All other shares besides those specified will be excluded from the sale).	Syed Mahamed Masud and others.	307 13 0 Police— 0 11 0	..	L. R.— 84 12 9
254	Dehi Bansila, pargana Gobindapur.	3,918 2 0 Police— 39 8 0	No ..	Residuary—Four annas share.	Nirod Bala Debi, sebait of (a) Sree Sree Iswar Salagram Sila Bigraha Deb Thakur.	979 8 0 Police— 9 14 0	..	L. R.— 425 1 0
				S. A. No. 3—Two annas and ten gandas share. (All other shares besides those specified will be excluded from the sale.)	Srish Chandra Sanyal.	612 3 0 Police— 6 3 0	..	L. R.— 265 10 0 Police— 1 8 0
274	Sujanagar, pargana Sujanagar.	5,056 15 0 Police— 33 1 0	No ..	Residuary—Four annas share. (All other shares besides that specified will be excluded from the sale.)	Maharaj Bahadur Singha.	1,264 3 6 Police— 8 5 0	..	L. R.— 429 12 0 Police— 2 11 0
303	Dhamin, pargana Dhamin.	2,195 0 1	No ..	Residuary—Six annas and sixteen gandas share.	Syed Mahamed Masud and others.	933 4 2	..	L. R.— 185 13 6
				S. A. No. 1—Two annas twelve gandas, two krantis and 5 37/93 dantis share.	Khandakar Khaja Bahauddin Hossain and others.	355 11 9	..	L. R.— 32 11 0
				S. A. No. 6—Four annas and fourteen gandas share. (All other shares besides those specified will be excluded from the sale.)	Bibi Wasiatan Nessa Unmatan Ayesha Chowdhurani.	644 12 6	..	L. R.— 158 8 0
304	Jahanabadh, pargana Dhamin.	792 0 0	Yes ..	....	Nalinakhi Chowdhurani.	..	L. R.— 391 0 0	..
342	Dehi Naradingi, pargana Kaligaon Kalsofa.	5,945 6 0	No ..	Residuary—Seven annas and seven gandas share. (All other shares than that specified will be excluded from the sale.)	Babu Brindaban Chandra Dey, Manager, Kasimbazar Raj Wards estate on behalf of (a) Maharaja Srish Chandra Nandi Bahadur and others.	2,731 3 3	..	L. R.— 551 6 9
363	T. Mahishkundi, pargana Chandlai.	7,192 14 0	Yes	....	Upendra Nath Maitra	..	L. R.— 1,071 7 0	..

Tauzi No.	Name of mahal and pargana.	Sadar jama of whole estate.	Whether the whole estate is to be sold.	If only a share is to be sold, specification of such share or shares.	Names of proprietors of property to be sold.	If only a share is to be sold, the sadar jama of such share.	If the whole estate is to be sold, the arrears due from it.	If only a share is to be sold, the arrears due from it.
1	2	3	4	5	6	7	8	9
		Rs. a. p.				Rs. a. p.	Rs. a. p.	Rs. a. p.
430	Dehi Brichapila, pargana Tappe Chapila.	3,274 11 0	No ..	Residuary—Three annas and ten gandas share.	Syed Mahamed Masud and others.	716 5 6	..	L. R.— 235 2 3
				S. A. No. 1—Two annas, twelve gandas, one cora, two dantis and $1\frac{6}{31}$ jobs share.	Khandakar Khaja Bahauddin Hosain and others.	535 5 0	..	L. R.— 65 13 6
				S. A. No. 4—Ten gandas share.	Bibi Fatema Khatun Chowdhurani.	102 5 6	..	L. R.— 34 12 0
				S. A. No. 5—Four annas share.	Maulvi Chowdhury Md. Mozaharal Haque and others.	818 10 9	..	L. R.— 275 10 0
				S. A. No. 6—Four annas share.	Bibi Hafezatan Nessa Unmatan Fatema Chowdhurani.	818 10 9	..	L. R.— 278 8 0
				(All other shares besides those specified will be excluded from the sale.)				
456	Dalil and others, pargana Byash.	4,669 8 0 Police— 46 15 0	No ..	S. A. No. 1—Two annas thirteen gandas, one cora and one kranti share.	Mirja Mahamed Yakub.	778 4 0 Police— 7 13 0	..	L. R.— 266 11 0 Police— 2 3 0
				(All other shares than that specified will be excluded from the sale.)				
483	Ispenjarpur *alias* Darusa, pargana Mahamedpur.	4,710 14 0	Yes ..	....	Dharani Kumar Ghosh and another.	..	L. R.— 897 6 0	..
1845	Jiasindhu, pargana Jiasindhu.	6,411 5 0 Police— 64 11 0	No ..	Residuary—Fourteen annas, eleven gandas, two coras and two krantis share.	Nabin Chandra Saha Chowdhury and others.	5,843 10 0 Police— 58 9 0	..	L. R.— 404 8 0
				(All other shares besides that specified will be excluded from the sale.)				
1850	Jiasindhu (Sree Sree Sarat Kali), pargana Jiasindhu.	801 6 9 Police— 8 0 6	Yes ..	....	Kuladyini Choudhurani, guardian of (*a*) Kalipada Roy, (*b*) Debipada Roy, minors, sebaits of Sree Sree Sarat Kali Thakurani.	..	L. R.— 247 8 0 Police— 2 4 0	..
2239	Bongaon Jaigir, pargana Bongaon Jaigir.	1,323 10 0 Police— 13 5 0	Yes ..	....	Hazratulla Shah and others.	..	L. R.— 535 7 0 Police— 3 6 0	..
2278	Dihi Puthia, pargana Mahamedpur.	1,636 1 0	Yes ..	....	Maulvi Choudhury Mahamed Mazaharal Haque and others.	..	L. R.— 556 7 0	..
2279	Ditto ..	1,636 1 0	Yes ..	....	Chowdhury Mahamed Jillo Kadir and others.	..	L. R.— 417 5 3	..
2280	Ditto ..	715 13 0	Yes ..	....	Bibi Jamilatan Nessa and others.	..	L. R.— 243 7 0	..
2281	Ditto ..	715 13 0	Yes ..	....	Syed Mahamed Masud and others.	..	L. R.— 191 11 6	..
2360	Dehi Ronabari, pargana Mahamedpur.	1,506 14 7 Police— 11 0 0	No ..	Residuary—Seven annas and ten gandas share.	Ditto ..	706 5 7 Police— 5 2 0	..	L. R.— 43 7 9
				S. A. No. 1—Three annas, six gandas, three coras, two krantis and one danti share.	Bibi Taheratan Nessa Unmatan Rafia Chowdhurani and others.	315 4 0 Police— 2 4 6	..	L. R.— 39 15 7
				S. A. No. 2—Four annas share.	Bibi Unmatan Rokya Chowdhurani.	376 12 0 Police— 2 12 0	..	L.R.— 127 7 0
				(All other shares besides those specified will be excluded from the sale.)				
2361	Dehi Ronabari including Parishon, pargana Mahamedpur.	1,507 1 7 Police— 11 0 0	No ..	Residuary—Fourteen annas share.	Chowdhury Mahamed Jillo Kadir and others.	1,318 11 7 Police— 9 10 0	..	L. R.— 254 0 3 Police— 1 4 0
				(All other shares than that specified will be excluded from the sale).				
2367	Hatra and others, pargana Tegachi.	796 8 0	Yes ..	....	Radharaman Chowdhury and others.	..	L. R.— 110 15 9	..
2368	Ditto ..	558 9 0	Yes ..	....	Ditto ..	..	L. R.— 207 10 0	..
2669	Md. Abdulla, pargana Jahangirpur.	992 14 0	Yes ..	....	Mahamed Abdulla Shah and others.	..	L. R.— 337 10 0	..

This notice is issued in respect of instalments of revenue due on or before the 30th Agrahayan, 1341 B.S., of which the latest date of payment was 12th January 1935 A.D.

Rajshahi, the 1st March 1935.

A. S. LARKIN, Collector.

Notification.

NOTICE is hereby given, under sections 6 and 13, Act XI of 1859, read with Act VII (B.C.) of 1868, that the undermentioned estates and shares of estates and khas mahal tenures in the district of Noakhali will be put up for sale at the office of the Collector of that district on the 22nd March 1935, at 12 noon, for arrears of revenue (and other demands which by law are realisable as arrears of land revenue).

When in columns 5, 7 and 9 of the following statement it is stated that only a share is to be sold, it is to be understood that a separate account is kept for that share :—

Tauzi No.	Name of mahal and pargana.	Sadar jama of whole estate.	Whether the whole estate is to be sold.	If only a share is to be sold, specification of such share or shares.	Names of proprietors of property to be sold.	If only a share is to be sold, the sadar jama of such share.	If the whole estate is to be sold, the arrears due from it.	In only a share is to be sold, the arrears due from it.
1	2	3	4	5	6	7	8	9
		Rs. a. p.		**Estates.**		Rs. a. p.	Rs. a. p.	Rs. a. p.
Lot No. 1, tauzi No. 7.	Babupur, hishya 3 as. 10 gds., pargana Babupur.	3,211 6 6 ..	Whole	..	Rai Raj Kumar Dutta Bahadur.	..	L. R.— 931 2 10 Cess— 1,619 3 6	..
Lot No. 2, tauzi No. 18.	Char Afzal Fakira and Char Lakshmi, pargana Sandip.	2,847 12 8	Share ..	*Separate account No. 1, hishya 7 as. 17 gds. 3 cr. 2 kg. 8 dhul.	Uma Charan Shaha and others.	1,405 2 9	..	L. R.— 3,151 9 11 Cess— 2,373 1 4
Ditto	Ditto ..	2,847 12 8	Do. ..	*Separate account No. 2, hishya 3 as. 1 gd. 2 cr. 2 kg.	Asadulla Bhuya and others.	547 13 11	..	L. R.— 1,195 12 1 Cess— 896 0 9
Lot No. 26, tauzi No. 199.	Char Algi, pargana Sandip.	1,230 0 0	Do. ..	*Separate account No. 2, hishya 6 as. 15 gds.	Munshi Afazuddin Ahmed and others.	518 14 6	..	L. R.— 305 7 0 Cess— 54 14 0
Lot No. 27. tauzi No. 203.	Dandrah, hishya 1 a. 18 gds. 2 cr. 1 kt., pargana Dandrah.	3,298 11 3	Do. ..	*Residuary share, hishya 12 as. 10 gds.	Rai Radha Kanta Aich Bahadur and others.	2,577 1 9	..	L. R.— 345 5 1 Cess— 1,332 11 10
Lot No. 28, tauzi No. 208.	Sukchar, pargana Zazira.	2,094 0 0	Do. ..	..	Maulvi Moazzam Hossain Chaudhury and others.	..	L. R.— 687 0 0 Cess— 457 13 9	..
Lot No. 62. tauzi No. 1574.	Thak Hudrakhali, pargana Sandip.	3,250 0 0	Do. ..	..	Seikh Md. Bazle Sobhan Chaudhury and others.	..	L. R.— 1,320 0 0 Cess— 132 12 0	..
Lot No. 63, tauzi No. 1577.	Thak Char Sekandar, pargana Zazira.	954 7 0	Do. ..	..	Babu Madhab Chandra Bhowmik, receiver, and others.	..	L. R.— 1,029 15 0 Cess— 62 13 6	..
Lot No. 66, tauzi No. 1956.	Diara Thak Char Amanullah, pargana Zazira.	3,881 0 0	Do. ..	..	Aminulla and others	..	L. R.— 3,794 4 3	..
Lot No. 70, tauzi No. 1963.	Thak Hudrakhali, pargana Sandip.	2,174 0 0	Do. ..	..	Keramat Ali and others.	..	L. R.— 883 0 0 Cess— 37 8 5	..
Lot No. 73, tauzi No. 1967.	Diara Mahal Hudrakhali, pargana Sandip.	586 0 0	Do. ..	..	Mr. Paul Delauney and others.	..	L. R.— 375 0 0 Cess— 36 6 0	..
				Khas Mahal Tenures.				
Lot No. 113, tauzi No. 1560.	Char Khondakar, police-station Shonagazi, tenure No. 286.	2,449 3 0	Whole	..	Ananda Kumar Sen and others.	..	Rent— 1,530 12 0 Cess— 124 13 0	..
Lot No. 143, tauzi No. 1587.	Chakla Banchhanagar, police-station Lakshmipur, tenure No. 81.	919 14 0	Do. ..	..	Nrisingha Gopal Singha Chaudhury and others.	..	Rent— 294 11 0 Cess— 69 3 6	..
Lot No. 199, tauzi No. 1627.	Char Meher, police-station Ramgati, abad No. 2.	880 7 0	Do. ..	..	Jadab Chandra Bhattacharyya and another.	..	Rent— 853 11 0 Cess— 100 13 10	..
Lot No. 200, tauzi No. 1627.	Char Meher, police-station Ramgati, abad No. 3.	760 6 0	Do. ..	..	Ditto ..	..	Rent— 747 8 0 Cess— 101 13 0	..
Lot No. 201, tauzi No. 1627.	Char Meher, police-station Ramgati, abad No. 4.	1,814 11 0	Do. ..	..	Ditto ..	..	Rent— 3,432 10 0 Cess— 695 15 9	..
Lot No. 202, tauzi No. 1627.	Char Meher, police-station Ramgati, abad No. 6.	2,887 8 0	Do. ..	..	Ditto ..	..	Rent— 5,883 3 0 Cess— 1,183 3 6	..
Lot No. 213, tauzi No. 1636.	Char Iswar Roy, Part I, police-station Hatiya, howla No. 18.	578 0 0	Do. ..	..	Krishna Mohan Shaha.	..	Rent— 144 12 0 Cess— 9 3 0	..

*Other shares than that specified shall be exempted from sale.

Tauzi No.	Name of mahal and pargana.	Sadar jama of whole estate.	Whether the whole estate is to be sold.	If only a share is to be sold, specification of such share or shares.	Name if proprietors of property to be sold.	If only a share is to be sold, the sadar jama of such share.	If the whole estate is to be sold, the arrears due from it.	In only a share is to be sold, the arrears due from it.
1	2	3	4	5	6	7	8	9
		Rs. a. p.				Rs. a. p.	Rs. a. p.	Rs. a. p.
Lot No. 219, tauzi No. 1636.	Char Iswar Roy, Part I, police-station Hatiya, howla No. 43.	578 0 0	Whole ..	Khas Mahal Tenures.	Bharat Chandra Sil and others.	.	Rent— 280 0 0 Cess— 56 0 0	..
Lot No. 275, tauzi No. 1662.	Magdhara, police-station Sandip, tenure No. 943.	516 5 0	Do. ..	..	Darbesh Ali and others.		Rent— 616 6 6 Cess— 41 13 6	.
Lot No. 289, tauzi No. 1662.	Magdhara, police-station Sandip, tenure No. 962/3.	611 15 0	Do. ..	..	Ditto ..	..	Rent— 914 8 0 Cess— 29 13 6	..
Lot No. 301, tauzi No. 1665.	Char Rahim, police-station Sandip, tenure No. 268.	1,249 14 0	Do. ..	..	Jamini Kumar Rakshit and others.	..	Rent— 1,076 5 0 Cess— 176 0 0	.
Lot No. 565, tauzi No. 1672.	Nalchira Chaudhurir Katta, police-station Hatiya, tenure No. 65.	556 0 0	Do. ..	..	Syed Ahmed and others.	..	Rent— 278 0 0 Cess— 25 2 6	..
Lot No. 637, tauzi No. 1686.	Char Alexender, police-station Ramgati, tenure No. 1 (old)/416 (new).	1,508 4 0	Do. ..	..	Serajul Haque ..	..	Rent— 1,971 8 0 Cess— 640 13 0	..
Lot No. 638, tauzi No. 1686.	Char Alexender, police-station Ramgati, tenure No. 2 (old)/417 (new).	968 9 0	Do. ..	..	Raja Mia Chaudhury and others.	..	Rent— 610 12 0 Cess— 54 0 0	..
Lot No. 639, tauzi No. 1686.	Char Alexender, police-station Ramgati, tenure No. 3 (old)/418 (new).	3,009 4 0	Do. ..	..	Krishna Sundar Majumdar.	..	Rent— 1,328 2 6 Cess— 43 0 0	..
Lot No. 649, tauzi No. 1686.	Char Sekandar, police-station Ramgati, tenure No. 2	714 5 0	Do. ..	..	Sachindra Lal Das	..	Rent— 245 3 0 Cess— 8 14 0	..
Lot No. 671, tauzi No. 1942.	Char Falcon, police-station Ramgati, jote No. 4 (old)/180 (new).	504 6 0	Do. ..	..	Shamsal Haque and others.	..	Rent— 483 4 0 Cess— 72 13 9	..
Lot No. 679, tauzi No. 1942.	Char Falcon, police-station Ramgati, jote No. 16 (old)/368 (new).	1,081 1 0	Do. ..	..	Nowab Ali ..	..	Rent— 1,465 10 3 Cess— 198 11 3	..
Lot No. 691, tauzi No 1942.	Char Falcon, police-station Ramgati, jote No. 32 (old)/208 (new).	611 9 0	Do. ..	..	Fazlor Rahaman and others.	..	Rent — 382 4 0 Cess— 46 0 0	..

These estates and shares of estates and khas mahal tenures are being advertised for sale for the instalments of revenue which were due on or before the 30th Agrahayan, 1341 B.S., of which the latest date of payment was the 12th January 1935.

Noakhali, the 2nd March 1935.

A. WHITTAKER, Collector.

Advertisement of sale

NOTICE is hereby given that the undermentioned plots of land no longer required by Government situated along the side of the Eastern Bengal Railway in the district of Faridpur will be put up to sale at 11 o'clock on the 24th April 1935, corresponding with the 11th Baisakh, 1342 B.S., in the office of the Subdivisional Officer of Goalundo at Rajbari.

The purchaser of the several plots of land will be subject to the following conditions :—

1st—The purchaser will have no power to make any excavations on the land nearer than fifteen feet from the railway boundary or to plough the land nearer than three feet from the same.

2nd—If the amount of purchase-money does not exceed Rs. 100, the whole amount must be paid down at once.

3rd—If the amount of purchase-money exceeds Rs. 100, one-fourth of the amount must be immediately deposited. If the balance be not paid by noon of the fifteenth day after the sale, reckoning the day of sale as one, or if that day be a close holiday, then by noon of the first succeeding office day the sale shall be cancelled the sum deposited being forfeited to Government and the lot again put up for sale at the risk of the defaulting purchaser, after issue of advertisement, as in the case of original sale.

4th—The plots of land will be sold subject to an annual assessment of revenue of Rs. 7-3 which will be subject to revision at the next general settlement of the temporarily-settled estates of the district to the highest bidders.

5th The sale will become final on receipt by the Collector of the orders of the Commissioners confirming it, and a regular conveyance will then be granted to the purchaser.

Consecutive lot No.	Name of district.	Pargana and mauza.	Number of mile on which land is situated.	Situated on which side of the railway.	Approximate area of lot in acres and decimals.	Land excluded from sale from each lot.		Commencement and termination of lot.	Boundary of lot.
						Reasons for exclusion.	Acres and decimals.		
1	2	3	4	5	6	7	8	9	10
1	Faridpur ..	Pargana Mahimshahi, mauza Kasinathpur, J. L. No. 385, thana Pangsha.	Between mile 1 and 2 of Kalukhali and Bhatiapara line.	To the west side of the railway.	5·859	Nil ..	Nil ..	....	Cadastral plots Nos. 69 to 71, 75 to 77, 87, 93, 95 to 98, 99 to 104, 112 to 115, 117 to 120 and parts of cadastral plots Nos. 15, 19, 20, 24 to 27, 29, 60, 64 to 66, 72, 74, 77, 86, 88 to 91, 94, 105, 106, 108, 109, 110, 111, 118, 121, 128, 130, 155, 157, 158, 161, 162, 179 to 183, 186, 209, 221, 223.
2	Ditto ..	Pargana Mahimshahi, mauza Mahimshahi-Chandpur, J. L. No. 384, thana Pangsha.	Ditto ..	Ditto ..	9·378	Nil ..	Nil ..	....	Cadastral plots Nos. 71, 73 to 79, 89, 93, 101 to 105, 117, 118, 161 to 163, 165 to 171 and parts of plots Nos. 68, 70, 72, 81 82, 90 to 92, 94, 95, 97, 99, 100, 106 to 110, 116, 117, 119, 130, 133 to 135, 142, 160, 161, 164, 172 to 175, 229 to 231.

Faridpur, the 2nd March 1935.

A. E. PORTER, Collector.

FORM 27.

(*See* paragraph 145.)

Advertisement of sale.

NOTICE is hereby given that the undermentioned plots of land, no longer required by Government situated along the Chittagong-Dohazari Railway, in the district of Chittagong, will be put to sale at 12 noon on the 6th May 1935, corresponding with the 23rd of Baisak 1342, at the Collector's office.

The purchasers of the several plots of land will be subject to the following conditions :—

1st- The purchasers will have no power to make any excavations on the land nearer than fifteen feet from the railway boundary or to plough the land nearer than three feet from the same.

2nd If the amount of purchase money does not exceed Rs. 100, the whole amount must be paid at once.

3rd—If the amount of purchase money exceeds Rs. 100, one-fourth of the amount must be immediately deposited If the balance be not paid by noon of the fifteenth day after the sale, reckoning the day of sale as one, or if that day be a close holiday, then by noon of the first succeeding office day, the sale shall be cancelled the sum deposited being forfeited to Government and the lot again put up for sale at the risk of the defaulting purchaser, after issue of advertisement, as in the case of original sale.

4th- The plots of land will be sold, subject to an annual assessment of Rs. 3 which will be subject to revision at the next general settlement of the temporarily-settled estates of the district, to the highest bidders.

5th - The sale will become final on receipt by the Collector of the orders of the Commissioner confirming it, and a regular conveyance will then be granted to the purchaser :—

Consecutive Lot No.	Name of district.	Pargana and mauza.	Number of mile on which land is situate.	Situated on which side of the railway.	Approximate area of lot in acres and decimals.	Land excluded from sale from each lot.		Commencement and termination of lot.	Boundary of lot.
						Reasons for exclusion.	Acres and decimals.		
1	2	3	4	5	6	7		8	9
1	Chittagong.	Police-station Patiya, village Dengapara.	15/23-16/1 mile, Divisional mile No. 12.	Western side	0·6862 acre.	..	..	From Chairman, 75703 to 76207.	North, South and East—By A. B. Railway land. West—By private land.

Chittagong, the 1st March 1935.

K. G. MORSHED, Additional Collector.

In the 1st Court of the Sub-Judge, Midnapore.

MORTGAGE EXECUTION CASE No. 102 OF 1934.

Sj. Devendra Lal Khan of Narajole, Midnapore, decree-holder,

versus

Sj. Manindra Narayan Agasti and others of Garhbetta, Midnapore, judgment-debtors.

Claim—Rs. 5,687-2-3.

Date of sale—16th April 1935 at 8 a.m.

Lot No.	District.	Thana.	Pargana.	Mauza.	Settlement interest. No.	Total land.	Annual rent.	To whom payable.	Remarks and share to be sold.
					(Ka) Schedule.				
						Acre.	Rs. a. p.		
I ..	Midnapore	Garhbetta	Bogri ..	Sangram-chak.	9	6·91	5 10 0	Midnapore Zemindary Co.	2 as. 13 gds. 1 kr. 1 kt.
II ..	Do. ..	Do. ..	Do. ..	Ghosal-bandh.	5	145·26	79 7 0	Ditto ..	Sixteen annas.
III ..	Do. ..	Do. ..	Do. ..	Garhbetta	7	0·52	3 8 9	Krishna P. Sukul	½th share along with the pucca house fully equipped.
						Bk. C.			
IV ..	Do. ..	Do. ..	Do. ..	Benachapra and Barikar ghat.	..	160 0	2 8 0	Soudamini Debya and others.	Sixteen annas.
V ..	Do. ..	Do. ..	Do. ..	Do. ..	..	43 4	45 0 0	Ditto ..	Ditto.
VI ..	Do. ..	Do. ..	Do. ..	Do. ..	..	96 0	15 8 0	Ditto ..	5 as. 6 gds. 2 kr. 2 kt.
VII ..	Do. ..	Do. ..	Do. ..	Do. ..	..	29 0	9 2 3	Ditto ..	Ditto.
					(Kha) Schedule.				
						Bk. C.	Rs. a. p.		
I ..	Midnapore	Garhbetta	Bogri ..	Metal ..	3	..	101 0 7	Midnapore Zemindary Co.	5 as. 6 gds. 2 kr. 2 kt.
II ..	Do. ..	Do. ..	Do. ..	Chota Dumuria.	4/1	170 0	14 4 3	Ditto ..	4 annas.
III ..	Do. ..	Do. ..	Do. ..	Do. ..	4/1, 5 & 6.	34 0	17 0 0	Ditto ..	2 as. 13 gds. 1 kr. 1 kt.
IV ..	Do. ..	Do. ..	Do. ..	Garhbetta	32/3 & 33	20 0	30 0 0	Krishna P. Sukul ..	1/3rd share.
					(Ga) Schedule.				
						Acre.	Rs. a. p.		
I ..	Midnapore	Garhbetta	Bogri ..	Sangram-chak.	9	6·91	5 10 0	Midnapore Zemindary Co.	10 as. 13 gds. 1 kr. 1 kt.

Midnapore, the 18th December 1934.

N. K. BANERJEE, Sub-Judge.
(51—1)

In the Court of the Fourth Officer, Deoghar, Santhal Parganas.

RENT SUIT No. 1081 OF 1934.

To Satis Chandra Chatterji.

WHEREAS the Receiver, Rohini Estate, has instituted a rent suit against you for your holding in mauza Basnadih, taluq Rohini, amounting to Rs. 78-5-6 and costs Rs. 13-11-3, you are hereby directed to appear before this Court personally or through an authorised agent to answer the claim or the case will be decided *ex parte* on 15th March 1935.

S. N. HUSSAIN, Sub-Deputy Collector.

Deoghar, the 14th February 1935. (532—2)

In the Court of the Fourth Officer, Deoghar, Santhal Parganas.

RENT SUIT No. 1082 OF 1934.

To Khitish Chandra Banerjee.

WHEREAS the Receiver, Rohini Estate, has instituted a rent suit against you for your holding in mauza Baghmara, taluq Rohini, amounting to Rs. 78-5-6 and costs Rs. 13-11-3, you are hereby directed to appear before this Court personally or through an authorised agent to answer the claim or the case will be decided *ex parte* on 15th March 1935.

S. N. HUSSAIN, Sub-Deputy Collector.

Deoghar, the 14th February 1935. (534—2)

In the Court of the Fourth Officer, Deoghar, Santhal Parganas.

RENT SUIT No. 1062 OF 1934.

To Babu Madhu Sudan Banerjee.

WHEREAS the Receiver, Rohini Estate, has instituted a rent suit against you for your holding in mauza Barmashia, taluq Rohini, amounting to Rs. 23-3-3 and Rs. 9-9-3 as costs, you are hereby directed to appear before this Court personally or through an authorised agent on 14th March 1935 to answer the claim or the case will be decided *ex parte*.

S. N. HUSSAIN, Sub-Deputy Collector.

Deoghar, the 14th February 1935. (533—2)

In the Court of the Fourth Officer, Deoghar, Santhal Parganas.

RENT SUIT No. 1075 OF 1934.

To Lala Gurvanaditya Mohera.

WHEREAS the Receiver, Rohini Estate, has instituted a rent suit against you for your holding in mauza Toradia, Bompas town, taluq Rohini, amounting to Rs. 74-7-3 and costs Rs. 13-5-3, you are hereby directed to appear before this Court personally or through an authorised agent to answer the claim or the case will be decided *ex parte* on 14th March 1935.

S. N. HUSSAIN, Sub-Deputy Collector.

Deoghar, the 14th February 1935. (535—2)

In the Court of the Fourth Officer, Deoghar, Santhal Parganas.

RENT SUIT No. 1031 OF 1934.

To Lalit Mohan Kar.

WHEREAS the Receiver, Rohini Estate, has instituted a rent suit against you for your holding in mauza Shamganj, Carstairs town, taluq Rohini, amounting to Rs. 7-8-0 and Rs. 8-7-3 as costs, you are hereby directed to appear before this Court personally or through an authorised agent on 14th March 1935 to answer the claim or the case will be decided *ex parte*.

S. N. HUSSAIN, Sub-Deputy Collector.

Deoghar, the 14th February 1935. (536—2)

In the Court of the Fourth Officer, Deoghar, Santhal Parganas.

RENT SUIT No. 1083 OF 1934.

To Jyotish Chandra Rai.

WHEREAS the Receiver, Rohini Estate, has instituted a rent suit against you for your holding in mauza Baghmara, taluq Rohini, amounting to Rs. 78-5-6 and Rs. 13-11-3 as costs, you are hereby directed to appear before this Court personally or through an authorised agent on 12th March 1935 to answer the claim or the case will be decided *ex parte*.

S. N. HUSSAIN, Sub-Deputy Collector.

Deoghar, the 14th February 1935. (537—2)

In the 1st Court of the Munsif at Berhampore (Murshidabad).

MONEY SUIT No. 478 OF 1934.

Nripendra Narayan Sen of Gorabazar (Berhampore), plaintiff,

versus

Altap Choudhuri of Kotal Pukur, district Santhal Parganas, defendant.

NOTICE is hereby given that the abovenamed plaintiff has instituted a suit against the abovenamed defendant for recovery of a sum of Rupees fifteen hundred due to a bond, dated the 5th November 1930. The suit is fixed on the 13th March 1935 for settlement of issues.

N. C. GANGULI, Munsif.

Berhampore, the 28th February 1935. (646—1)

In the 2nd Court of the Sub-Judge at Midnapore.

MORTGAGE EXECUTION CASE No. 47 OF 1934.

Claim—Rs. 9,761-5-0.

Nitya Gopal Paria and others of Dihi Kasimpore, decree-holders,

versus

Jatindra Nath Ghorai *alias* Das and others of Gholda, judgment-debtors.

Schedule of property to be sold on 18th March 1935 at 12 noon.

72 BIGHAS 3 cottas 10 chhataks at a rental of Rs. 147-10-12½ gds. situated in Bhagabankhali Jalpai within mauza Dharanidhar chak and 23 bighas 7 cottas 6½ chhataks at a rental of Rs. 36-12-10 gds. situated in mauza Gholda, all in pargana Jalamutha, police-station Nandigram. Landlord is the Secretary of State for India in Council.

N. K. BANERJI, Sub-Judge,
1st Court, in charge of 2nd Court.

Midnapore, the 20th February 1935. (622—1)

In the Court of the Sub-Judge of Jessore.

MONEY EXECUTION CASE No. 57 OF 1934.

Registered Jessore Loan Company, Limited, Jessore, decree-holder,

versus

Babu Gopal Hari Ghose Choudhury and others of Ramnagar, judgment-debtors.

THE following immoveable properties along with some other properties of the judgment-debtors will be sold at auction sale at 12 noon on the 18th March 1935 by the Nazir of the Court in the above-mentioned execution case for realisation of the decretal amount and costs amounting to Rs. 3,562-11-6p. under the Money Decree No. 376 of 1921 of the Subordinate Judge's Court, Jessore :-

Schedule of properties.

1. Whatever right, title and interest of judgment-debtors Indu Bhushon and Lalit Bhushon Ghose Choudhury, each 5 gandas 1 kara 1 kranti share and that of judgment-debtor Manmatharam Ghose Choudhury, 1 anna 1 ganda 1 kara 1 kranti share for self and his brothers Arabindaram and Pramatharam Ghose Choudhury in tauzi No. 237 of the Jessore Collectorate, pargana Emadpur within the jurisdiction of police-station Kotwali, bearing annual revenue of Rs. 1,103-1-1p. Approximate value Rs. 31.

2. Whatever right, title and interest of judgment-debtors Chandra Shekhar, Gangadhar and Rameswar Ghose Choudhury, 3 gandas 2 krantis 8 tils share and of the judgment-debtors Promode Ranjan, Ramani Ranjan and Kamala Kanta Ghose Choudhury, each 1 kara 1 kranti 5½ tils share in tauzi No. 275 of the Jessore Collectorate, pargana Saidpur within the jurisdiction of police-station Kotwali, bearing annual revenue of Rs. 1,329-5-6p. Approximate value Rs. 85.

G. BANERJI, Sub-Judge.

Jessore, the 23rd February 1935. (612—1)

In the Court of the Sub-Judge of Jessore.

RENT EXECUTION CASE No. 62 OF 1934.

Registered Jessore Loan Company, Limited, Jessore, decree-holder,

versus

Sreemati Rani Kanakprava Devi, executrix to the estate of Kumar Khiroda Kanta Roy of Chanchra, police-station Kotwali, district Jessore, judgment-debtor.

THE following immoveable properties of the judgment-debtor will be sold at auction sale at 12 noon on the 18th day of March 1935 by the Nazir of the Court in the above-mentioned execution case for the realisation of the decretal amount and costs amounting to Rs. 16,281-15-3p. under the Rent Decree No. 21 of 1932 of the Subordinate Judge's Court, Jessore :—

Schedule of properties.

1. Whatever right, title and interest the judgment-debtor has in 16 annas share in tauzi No. 5533 of Jessore Collectorate, mahal Zamindary Bhojeganti Barandi and others in pargana Emadpur within the jurisdiction of police-stations Kotwali and Manirampur, bearing an annual revenue of Rs. 761-14-6 p. only. Approximate value Rs. 300.

2. Whatever right, title and interest the judgment-debtor has in 10 annas 13 gandas 1 kara 1 kranti share in tauzi No. 158 of Khulna Collectorate, mahal Bajeapty Taluk Kismat Mulgram Zamindary within the jurisdiction of police-stations Jhinkargacha, Kotwali, Manirampur, Nawapara and Chougacha of district Jessore and police-stations Dumuria and Paikgacha of district Khulna, bearing an annual revenue of Rs. 1,548-13. Approximate value Rs. 300 only.

3-4. Whatever right, title and interest the judgment-debtor has in 16 annas share in tauzi No. 5534 of Jessore Collectorate, mahal Zamindary Emadpur chaham within the jurisdiction of police-stations Kotwali and Manirampur, bearing an annual revenue of Rs. 885-3. Approximate value Rs. 200 only.

G. BANERJI, Sub-Judge.

Jessore, the 23rd February 1935. (613—1)

In the High Court of Judicature at Fort William in Bengal, in insolvency.

NOTICE OF ADJUDICATION ORDER.

No. 19 of 1935.

Re Douglas Charles Letham, residing in Police Quarters at Pora Bazar, Calcutta, and employed as a Sergeant in the Calcutta Police Force at Lal Bazar, in the town of Calcutta, *ex parte* the debtor in person.

ON the 20th day of February 1935, an order was made by the High Court of Judicature at Fort William in Bengal in its insolvency jurisdiction adjudging the abovenamed as an insolvent.

Note.—All debts due to the estate should be paid to me

Dated this 26th day of February 1935.

G. M. FALKNER, Official Assignee.

In the High Court of Judicature at Fort William in Bengal, in insolvency.

NOTICE OF ADJUDICATION ORDER.

No. 20 of 1935.

Re Peter Joseph Smith, residing at No. 18, Lal Bazar Street, Calcutta, a Sergeant employed in the Calcutta Police Force, *ex parte* the debtor.

D. N. Ganguli, debtor's solicitor.

ON the 20th day of February 1935, an order was made by the High Court of Judicature at Fort William in Bengal in its insolvency jurisdiction adjudging the abovenamed as an insolvent.

Note.—All debts due to the estate should be paid to me.

Dated this 26th day of February 1935.

G. M. FALKNER, Official Assignee.

In the High Court of Judicature at Fort William in Bengal, in insolvency.

NOTICE OF ADJUDICATION ORDER.

No. 21 of 1935.

Re George Frederick Kennewell Britland, residing at No. 306(C), Bowbazar Street, Calcutta, a Sergeant employed in the Calcutta Police Force, *ex parte* the debtor in person.

ON the 21st day of February 1935, an order was made by the High Court of Judicature at Fort William in Bengal in its insolvency jurisdiction adjudging the abovenamed as an insolvent.

Note.—All debts due to the estate should be paid to me.

Dated this 26th day of February 1935.

G. M. FALKNER, Official Assignee.

In the High Court of Judicature at Fort William in Bengal, in insolvency.

NOTICE OF ADJUDICATION ORDER.

No. 22 of 1935.

Re Sankar Prosad Banerjee, residing at No. 11, Jadu Bhattacharjee Lane, Kalighat, Calcutta, an assistant in the Original Side, High Court, Calcutta, *ex parte* the debtor, in person.

ON the 22nd day of February 1935, an order was made by the High Court of Judicature at Fort William in Bengal in its insolvency jurisdiction adjudging the abovenamed as an insolvent.

Note. All debts due to the estate should be paid to me.

Dated this 27th day of February 1935.

G. M. FALKNER, Official Assignee.

In the High Court of Judicature at Fort William in Bengal, in insolvency.

NOTICE OF ADJUDICATION ORDER.

No. 24 of 1935.

Re Charles Campbell, formerly residing at No. 17, Royd Street, and lately residing at No. 3, Hartford Lane, but at present residing at No. 17, Park Lane, Suite No. 8, in the town of Calcutta, a band supplier, *ex parte* the debtor in person.

ON the 25th day of February 1935 an order was made by the High Court of Judicature at Fort William in Bengal in its insolvency jurisdiction adjudging the abovenamed as an insolvent.

Note.—All debts due to the estate should be paid to me.

Dated this 1st day of March 1935.

G. M. FALKNER, Official Assignee.

In the High Court of Judicature at Fort William in Bengal, in insolvency.

No. 171 of 1932.

Re *Harban Prosad and Ajodhya Prosad.*

TAKE notice that on the 2nd day of April 1935 at 11 o'clock in the forenoon or so soon thereafter this Court will be moved before the Registrar-in-Insolvency on behalf of Hariram Serowgee for an order that the adjudication of the abovenamed insolvents may be annulled.

And take notice that at the hearing of this motion it is intended to use in evidence against you an affidavit sworn herein on the 19th day of January 1935 by Dharam Chand Raniwalla.

Dated this 21st day of February 1935.

KAMAL KRISHNA SEN, Attorney for the said Hariram Serowgee of Guest House, Behala.

No. 1B, Old Post Office Street, Calcutta.

To Harban Prosad and Ajodhya Prosad, the insolvents abovenamed.

(639—1)

In the High Court of Judicature at Fort William in Bengal, in insolvency.

No. 190 of 1933.

Re Estate Moosaji Hasan Asmal.

NOTICE is hereby given that a dividend is intended to be declared in the above estate. Persons claiming to be creditors of the above estate are hereby required to file their claims by an affidavit, supported by vouchers, on or before the 15th April 1935, after which date claims received in this office will not be considered.

Creditors who have already filed their claims need not file fresh claims.

G. M. FALKNER, Official Assignee.

Calcutta, the 28th February 1935. (640—1)

In the Court of the District Judge of Bankura.

INSOLVENCY CASE No. 6 OF 1933.

Felaram De of Bankura Town, insolvent.

NOTICE is hereby given that the abovenamed insolvent has applied for his final discharge under section 41 of the Provincial Insolvency Act and 9th March 1935 has been fixed for hearing of the petition.

S. K. GANGULI, District Judge.

Bankura, the 21st February 1935. (577—1)

ORDER ANNULLING ADJUDICATION.

Section 35 of the Provincial Insolvency Act, V of 1920.

In the Court of the District Judge at Chittagong.

INSOLVENCY APPLICATION No. 41 OF 1933.

Kalameah Sadager, son of late Mosanali Sadager, of Sholasahar, police-station Panchlaish, district Chittagong, debtor, applicant.

INSOLVENT Kalameah Sadager not showing why the order of adjudication should not be annulled, it is ordered that the order of adjudication, dated 3rd May 1934, against the said insolvent Kalameah Sadager of Sholasahar be and the same is hereby annulled.

Dated this 23rd day of November 1934.

E. S. SIMPSON, District Judge.

(609—1)

NOTICE TO CREDITORS OF APPLICATION FOR DISCHARGE.

Section 41(*1*) of the Provincial Insolvency Act, V of 1920.

In the Court of the District Judge at Dacca.

INSOLVENCY CASE Nos. 20 AND 22 OF 1933.

(1) Chandra Bhusan Chakravarty and (2) Surjya Bhusan Chakravarty, sons of late Jadu Nath Chakravarty, residents of Bajrojogini Pukurpara, police-station Munshiganj, district Dacca, insolvents.

TAKE notice that the abovenamed insolvents have applied at the Court for their discharge, and that the Court has fixed the 13th day of March 1935 at 10 o'clock for hearing the application.

Dated this 15th day of February 1935.

E. B. H. BAKER, District Judge.

(520—1)

In the Court of the District Judge of Dacca.

INSOLVENCY CASE No. 4 OF 1935.

Rebati Mohan Nath, debtor, petitioner.

WHEREAS Rebati Mohan Nath, son of late Radha Charan Nath, resident of Serajabad, police-station Tangibari, district Dacca, has applied to this Court for being adjudicated an insolvent, the 12th March 1935 next has been fixed for the hearing of the aforesaid petition, examination of the petitioner and the creditors.

E. B. H. BAKER, District Judge.

Dacca, the 15th February 1935. (523 1)

In the Court of the District Judge of Dacca.

INSOLVENCY CASE No. 27 OF 1933.

Rajani Kanta Sardar *alias* Sarkar, insolvent.

TAKE notice that the order of adjudication, dated 22nd January 1934, against Rajani Kanta Sardar *alias* Sarkar, son of late Nilmani Sardar, resident of Ranigaon, police-station Lohajung, district Dacca, has hereby been annulled on 22nd January 1935 for his failure to apply for discharge within the time specified by the Court.

Dated this 13th day of February 1935.

E. B. H. BAKER, District Judge.

(524—1)

NOTICE TO CREDITORS OF APPLICATION FOR DISCHARGE.

Section 41(*1*) of the Provincial Insolvency Act, V of 1920.

In the Court of the District Judge at Dacca.

INSOLVENCY CASE No. 6 OF 1934.

Kalu Gazi, son of late Shaik Khan Mamud, resident of Noanagar, police-station Baidyer Bazar, district Dacca, insolvent, applicant.

TAKE notice that the abovenamed insolvent has applied at the Court for his discharge, and that the Court has fixed the 12th day of March 1935 at 10 o'clock for hearing the application.

Dated this 13th day of February 1935.

E. B. H. BAKER, District Judge.

(526—1)

NOTICE TO CREDITORS OF APPLICATION FOR DISCHARGE.

Section 41(*1*) of the Provincial Insolvency Act, V of 1920.

In the Court of the District Judge at Dacca.

INSOLVENCY CASE No. 7 OF 1934.

Sheik Balai, son of late Sheik Khan Mamud, resident of Noanagar, police-station Baidyer Bazar, district Dacca, insolvent, applicant.

TAKE notice that the abovenamed insolvent has applied at the Court for his discharge, and that the Court has fixed the 12th day of March 1935 at 10 o'clock for hearing the application.

Dated this 13th day of February 1935.

E. B. H. BAKER, District Judge.

(527—1)

NOTICE TO CREDITORS OF APPLICATION FOR DISCHARGE.

Section 41(*1*) of the Provincial Insolvency Act, V of 1920.

In the Court of the District Judge at Dacca.

INSOLVENCY CASE No. 8 OF 1934.

Sheik Jaha Bux, son of late Sheik Khan Mamud, resident of Noanagar, police-station Baidyer Bazar, district Dacca, insolvent, applicant.

TAKE notice that the abovenamed insolvent has applied at the Court for his discharge, and that the Court has fixed the 12th day of March 1935 at 10 o'clock for hearing the application.

Dated this 13th day of February 1935.

E. B. H. BAKER, District Judge.

(528—1)

In the Court of the District Judge of Jalpaiguri.

INSOLVENCY CASE No. 29 OF 1934.

Jabedali Mohammed, petitioner.

JABEDALI MOHAMMED, son of Jaimat Mohammed, resident of Mirgarh, police-station Boda, district Jalpaiguri, who was adjudged insolvent on the 6th day of July 1934 has applied to this Court for final discharge.

The 11th day of March 1935 has been fixed for hearing the application at Jalpaiguri.

S. BANERJI, *for* District Judge.

Dinajpur, the 15th February 1935. (513—1)

In the Court of the District Judge of Faridpur.

INSOLVENCY CASE No. 103 OF 1933.

NOTICE is hereby given that the order of adjudication of one Jadu Sheik, son of late Juran Sheik, of Harikole, police-station Baliakandi, district Faridpur, dated the 16th January 1934, has been annulled by this Court, dated the 30th January 1935.

K. B. ROY, District Judge.

Faridpur, the 21st February 1935. (578—1)

In the Court of the District Judge of Faridpur.

INSOLVENCY CASE No. 190 OF 1934.

Baheruddin Sheik, son of late Enatulla Sheik, of Sreerampur, police-station Pangsa, district Faridpur, debtor, petitioner.

NOTICE is hereby given that the abovenamed debtor, petitioner, has applied to this Court to be adjudged insolvent and the 9th March 1935 has been fixed for the hearing of the application.

K. B. ROY, District Judge.

Faridpur, the 27th February 1935. (631—1)

In the Court of the District Judge of Faridpur.

INSOLVENCY CASE No. 1 OF 1935

Esmail Molla, son of late Laskar Molla, of Mollardangi, police-station Baliakandi, district Faridpur, debtor, petitioner.

NOTICE is hereby given that the abovenamed debtor, petitioner, has applied to this Court to be adjudged insolvent and the 18th March 1935 has been fixed for the hearing of the application.

K. B. ROY, District Judge.

Faridpur, the 27th February 1935. (632—1)

In the Court of the District Judge of Hooghly.

NOTICE is hereby given, under clause (2) of section 12 of the Provincial Insolvency Act, V of 1920, to his creditors that the insolvency petition of Mir Raisuddin, son of late Mir Ramjan Ali, of Baksha, thana Jangipara, district Hooghly, has been admitted by this Court as No. 8 of 1935, and that the 11th March 1935 has been fixed for the hearing thereof.

T. BANERJI, *for* District Judge.

Chinsura, the 14th February 1935. (547—1)

In the Court of the District Judge of Hooghly.

INSOLVENCY PETITION No. 34 OF 1934.

NOTICE is hereby given that Ram Kissore Karmaker, son of late Bhusan Chandra Karmaker, of Khanati, thana Goghat, district Hooghly, was on the 11th August 1934 adjudged an insolvent. The 11th March 1935 has been fixed for hearing the application for final discharge.

T. BANERJI, *for* District Judge.

Chinsura, the 14th February 1935. (548—1)

In the Court of the District Judge of Hooghly.

INSOLVENCY PETITION No. 35 OF 1934.

NOTICE is hereby given that Gopi Ballav Karmaker, son of late Bhusan Chandra Karmaker, of Khanati, thana Goghat, district Hooghly, was on the 11th August 1934 adjudged an insolvent. The 11th March 1935 has been fixed for hearing the application for final discharge.

T. BANERJI, *for* District Judge.

Chinsura, the 14th February 1935. (549—1)

In the Court of the Addl. District Judge of Hooghly at Howrah.

NOTICE is hereby given under the Provincial Insolvency Act, V of 1920, to his creditors that the insolvency petition of Chamru Mala, Sew Narayan Mala and Rup Narayan Mala, sons of late Ramdhani Mala, of 73, Ramkrishnapur Ghat Road, thana Howrah, district Howrah, has been admitted by this Court as No. 237 of 1934, and that the 19th March 1935 has been fixed for the hearing thereof.

S. N. MODAK, Addl. District Judge.

Howrah, the 20th February 1935. (607—1)

In the Court of the District Judge of Pabna and Bogra.

INSOLVENCY CASE No. 4 OF 1935.

WHEREAS Khalilar Rahman Miah, son of late Jámarat Ali Miah, at present resident of Puran Kuthi, police-station and district Pabna, has applied to this Court by a petition, dated 12th February 1935, to be declared an insolvent, this is to give notice to all his creditors that the Court has fixed the 14th March 1935 for hearing of the aforesaid application and for examination of the debtor.

B. K. BASU, District Judge.

Pabna, the 15th February 1935. (518—1)

In the Court of the District Judge of Pabna and Bogra.

INSOLVENCY CASE No. 39 OF 1934.

NOTICE is hereby given that insolvent Aferuddin Mondal, son of late Aseruddin Mondal, of Khatbari, police-station Chatmohar and district Pabna, has applied for his final discharge and the 18th March 1935 has been set down for hearing of the application.

B. K. BASU, District Judge.

Pabna, the 18th February 1935. (556—1)

In the Court of the District Judge of Pabna and Bogra.

INSOLVENCY CASE No. 3 OF 1935.

WHEREAS Banka Behari Sarkar, son of late Dinabandhu Sarkar, of Bonogram, police-station Chatmohar and district Pabna, has applied to this Court by a petition, dated 7th February 1935, to be declared an insolvent, this is to give notice to all his creditors that the Court has fixed the 12th March 1935 for hearing of the aforesaid application and for examination of the debtor.

B. K. BASU, District Judge.

Pabna, the 19th February 1935. (557—1)

In the Court of the District Judge of Pabna and Bogra.

INSOLVENCY CASE No. 5 OF 1935.

WHEREAS Haridas Saha, son of late Srikanta Nath Saha, of Pabna Raghabpur, police-station and district Pabna, has applied to this Court, by a petition, dated 14th February 1935, to be declared an insolvent, this is to give notice to all his creditors that the Court has fixed the 18th March 1935 for hearing of the aforesaid application and for examination of the debtor.

B. K. BASU, District Judge.

Pabna, the 20th February 1935. (573—1)

NOTICE TO CREDITORS OF THE DATE OF HEARING OF AN INSOLVENCY PETITION.

Section 19 of the Provincial Insolvency Act, V of 1920.

In the Court of the District Judge at Suri.

INSOLVENCY APPLICATION No. 2 OF 1935.

WHEREAS Nagendra Kumar Mukherji, son of late Guru Prasanna Mukherji, of Suri-Dangalpara, thana and chauki Suri, district Birbhum, has applied to this Court, by a petition, dated 11th January 1935, to be declared an insolvent under the Provincial Insolvency Act, V of 1920, this is to give notice to the creditors of the aforesaid debtor that the Court has fixed the 13th day of March 1935 for hearing of the aforesaid petition and the examination of the debtor.

B. K. GUHA, District Judge.

Suri, the 20th February 1935. (567—1)

In the Court of the District Judge of 24-Parganas.

INSOLVENCY CASE No. 4 OF 1935.

Haripada Halder of Ramrampur, Diamond Harbour, 24-Parganas, applicant.

To Firm Jitendra Chandra Kar and Jnanendra Chandra Kar of 57, Clive Street, Calcutta, and others, creditors.

ON the 6th day of February 1935 it was ordered that the matter of the petition of the applicant be heard on the 11th day of March 1935, and that the said applicant do attend to be examined by this Court on that date.

T. H. ELLIS, District Judge.

Alipore, the 12th February 1935. (472—1)

ORDER OF ADJUDICATION.

Section 27 of the Provincial Insolvency Act, V of 1920.

In the 4th Court of the Sub-Judge at Alipore.

INSOLVENCY APPLICATION No. 297 OF 1934.

PURSUANT to a petition, dated 14th July 1934, filed by Raghu Nath Das of 40A, Boldeopara Road, police-station Maniktola, and on the application of the debtor himself and on reading his application and hearing his pleader, it is ordered that the debtor be and the said debtor is hereby adjudged insolvent.

It is further ordered that the debtor do apply for his discharge within six months from this date.

Dated this 18th day of December 1934.

J. N. SEN, Sub-Judge.

(148—1)

ORDER OF ADJUDICATION.

Section 27 of the Provincial Insolvency Act, V of 1920.

In the 4th Court of the Sub-Judge at Alipore.

INSOLVENCY APPLICATION No. 377 OF 1934.

PURSUANT to a petition, dated 29th August 1934, filed by Nalini Mohan Mukherjee of 18, Chakrabere Road North, Calcutta, and on the application of the debtor himself and on reading his application and hearing his pleader, it is ordered that the debtor be and the said debtor is hereby adjudged insolvent.

It is further ordered that the debtor do apply for his discharge within six months from this date.

Dated this 3rd day of January 1935.

J. N. SEN, Sub-Judge.

(152—1)

ORDER OF ADJUDICATION.

Section 27 of the Provincial Insolvency Act, V of 1920.

In the 4th Court of the Sub-Judge at Alipore.

INSOLVENCY APPLICATION No. 391 OF 1934.

PURSUANT to a petition, dated 6th September 1934, filed by Purna Chandra Nandy of 2-16, Sir Gurudas Road, Calcutta, and on the application of the debtor himself and on reading his application and hearing his pleader, it is ordered that the debtor be and the said debtor is hereby adjudged insolvent.

It is further ordered that the debtor do apply for his discharge within six months from this date.

Dated this 18th day of December 1934.

J. N. SEN, Sub-Judge.

(153—1)

NOTICE TO CREDITORS OF APPLICATION FOR DISCHARGE.

Section 41 (*1*) of the Provincial Insolvency Act, V of 1920.

In the 4th Court of the Sub-Judge at Alipore.

INSOLVENCY CASE No. 535 OF 1933.

Rashbehari Das, Santosh Kumar Das, a firm, carrying on business at Rashkhola, police-station Khardah, applicant.

TAKE notice that the abovenamed insolvent has applied at the Court for his discharge, and that the Court has fixed the 18th day of March 1935 at 11 o'clock for hearing the application.

Dated this 22nd day of January 1935.

J. N. SEN, Sub-Judge.

(259—)

NOTICE TO CREDITORS OF APPLICATION FOR DISCHARGE.

Section 41 (*1*) of the Provincial Insolvency Act, V of 1920.

In the 4th Court of the Sub-Judge at Alipore.

INSOLVENCY CASE No. 16 OF 1934.

Khusilal Aratder of Arbelia, police-station Baduria, 24-Parganas, applicant.

TAKE notice that the abovenamed insolvent has applied at the Court for his discharge, and that the Court has fixed the 18th day of March 1935 at 11 o'clock for hearing the application.

Dated this 19th day of January 1935.

J. N. SEN, Sub-Judge.

(260—1)

NOTICE TO CREDITORS OF APPLICATION FOR DISCHARGE.

Section 41(*1*) of the Provincial Insolvency Act, V of 1920,

In the 4th Court of the Sub-Judge at Alipore.

INSOLVENCY CASE No. 88 OF 1934.

Siddheswar Rauth of Ichapore, police-station Nawpara, 24-Parganas, applicant.

TAKE notice that the abovenamed insolvent has applied at the Court for his discharge, and that the Court has fixed the 18th day of March 1935 at 11 o'clock for hearing the application.

Dated this 22nd day of January 1935.

J. N. SEN, Sub-Judge.

(262—1)

NOTICE TO CREDITORS OF APPLICATION FOR DISCHARGE.

Section 41(*1*) of the Provincial Insolvency Act, V of 1920.

In the 4th Court of the Sub-Judge at Alipore.

INSOLVENCY CASE No. 108 OF 1934.

Shaikh Noor Mahammad of Khardah, police-station Khardah, 24-Parganas, applicant.

TAKE notice that the abovenamed insolvent has applied at the Court for his discharge, and that the Court has fixed the 18th day of March 1935 at 11 o'clock for hearing the application.

Dated this 19th day of January 1935.

J. N. SEN, Sub-Judge.

(263—1)

NOTICE TO CREDITORS OF APPLICATION FOR DISCHARGE.

Section 41(*1*) of the Provincial Insolvency Act, V of 1920.

In the 4th Court of the Sub-Judge at Alipore.

INSOLVENCY CASE No. 182 OF 1934.

Fool Chand Shah of 102, Tollygunge Road, police-station Tollygunge, 24-Parganas, applicant.

TAKE notice that the abovenamed insolvent has applied at the Court for his discharge, and that the Court has fixed the 18th day of March 1935 at 11 o'clock for hearing the application.

Dated this 19th day of January 1935.

J. N. SEN, Sub-Judge.

(264—1)

In the 4th Court of the Sub-Judge of 24-Parganas.

INSOLVENCY CASE No. 462 OF 1934.

Pannalal De of 116, Circular Garden Reach Road, Khiddderpore, police-station Watgunge, applicant.

To Purna Chandra Shah and Nutbehari Shah of 75-1, Tollygunge Road, Calcutta, and others, creditors.

ON the 18th day of January 1935 it was ordered that the matter of the petition of the applicant be heard on the 18th day of March 1935, and that the said applicant do attend to be examined by this Court on that date.

J. N. SEN, Sub-Judge

Alipore, the 19th January 1935. (265—1)

In the 4th Court of the Sub-Judge of 24-Parganas.

INSOLVENCY CASE No. 512 OF 1934.

Gourisha Agarwalla of 27P., Mahim Halder Street, police-station Bhawanipore, applicant.

To Ramdeo Hanuman Prosad of Ticcapara, Howrah, and others, creditors.

ON the 18th day of January 1935 it was ordered that the matter of the petition of the applicant be heard on the 18th day of March 1935, and that the said applicant do attend to be examined by this Court on that date.

J. N. SEN, Sub-Judge.

Alipore, the 19th January 1935. (266—1)

In the 4th Court of the Sub-Judge of 24-Parganas.

INSOLVENCY CASE No. 527 OF 1934.

Sambhu Nath Sen of 7, Suburban School Road, Bhawanpore, applicant.

To Kedar Nath Palsiolla of 95, Lower Chitpore Road, Calcutta, and others, creditors.

ON the 17th day of January 1935 it was ordered that the matter of the petition of the applicant be heard on the 18th day of March 1935, and that the said applicant do attend to be examined by this Court on that date.

J. N. SEN, Sub-Judge.

Alipore, the 19th January 1935. (267—1)

In the 4th Court of the Sub-Judge of 24-Parganas.

INSOLVENCY CASE No. 545 OF 1934.

Shaikh Kafiluddin of 48-1, South Road, Entally, police-station Entally, applicant.

To Shaikh Enaitullah of 5, Chingrighata Lane, police-station Entally, and others, creditors.

ON the 18th day of January 1935 it was ordered that the matter of the petition of the applicant be heard on the 18th day of March 1935, and that the said applicant do attend to be examined by this Court on that date.

J. N. SEN, Sub-Judge.

Alipore, the 21st January 1935. (270—1)

In the 4th Court of the Sub-Judge of 24-Parganas.

INSOLVENCY CASE No. 1 OF 1935.

Priya Nath Gupta of 81-A, Diamond Harbour Road, 24-Parganas, applicant.

To Sashi Bhusan Ghose of 18A, Diamond Harbour Road, 24-Parganas, and others, creditors.

ON the 18th day of January 1935 it was ordered that the matter of the petition of the applicant be heard on the 18th day of March 1935, and that the said applicant do attend to be examined by this Court on that date.

J. N. SEN, Sub-Judge.

Alipore, the 21st January 1935. (271—1)

In the 4th Court of the Sub-Judge of 24-Parganas.

INSOLVENCY CASE No. 2 OF 1935.

Lalit Mohan Mitra of 3A, Bahir Mirzapore Road, police-station Manicktala, applicant.

To B. Khetri of No. 3, Thakurdas Chakravarty's Street, Calcutta, and others, creditors.

ON the 11th day of January 1935 it was ordered that the matter of the petition of the applicant be heard on the 18th day of March 1935, and that the said applicant do attend to be examined by this Court on that date.

J. N. SEN, Sub-Judge.

Alipore, the 19th January 1935. (272—1)

In the 4th Court of the Sub-Judge of 24-Parganas.

INSOLVENCY CASE No. 15 OF 1935.

Nagendra Nath Ghose of 63, Ashutosh Mukherjee Road, police-station Bhowanipore, applicant.

To Prasanna Kumar Ray of 22, Upper Chitpur Road, and others, creditors.

ON the 18th day of January 1935 it was ordered that the matter of the petition of the applicant be heard on the 18th day of March 1935, and that the said applicant do attend to be examined by this Court on that date.

J. N. SEN, Sub-Judge.

Alipore, the 19th January 1935. (275—1)

In the 4th Court of the Sub-Judge of 24-Parganas.

INSOLVENCY CASE No. 16 OF 1935.

Ananda Mohan Guha of 15-1 C, Ultadanga Road, police-station Maniktolla, applicant.

To Narendra Nath Basu of Bhowanipore, Calcutta, and others, creditors.

ON the 18th day of January 1935 it was ordered that the matter of the petition of the applicant be heard on the 18th day of March 1935, and that the said applicant do attend to be examined by this Court on that date.

J. N. SEN, Sub-Judge.

Alipore, the 21st January 1935. (276—1)

ORDER OF ADJUDICATION.

Section 27 of the Provincial Insolvency Act, V of 1920.

In the 4th Court of the Sub-Judge at Alipore.

INSOLVENCY APPLICATION No. 194 OF 1934.

PURSUANT to a petition, dated 11th May 1934, filed by Jagheswar Paul of 3D, Kundu Road, police-station Bhowanipore, and on the application of the debtor himself and on reading his application and hearing his pleader, it is ordered that the debtor be and the said debtor is hereby adjudged insolvent.

It is further ordered that the debtor do apply for his discharge within six months from this date.

Dated this 22nd day of January 1935.

J. N. SEN, Sub-Judge.

(354—1)

ORDER OF ADJUDICATION.

Section 27 of the Provincial Insolvency Act, V of 1920.

In the 4th Court of the Sub-Judge at Alipore.

INSOLVENCY APPLICATION No. 213 OF 1934.

PURSUANT to a petition, dated 24th May 1934, filed by R. A. Hancock of 8, Loco Quarters, Narikeldanga, 24-Parganas, and on the application of the debtor himself and on reading his application and hearing his pleader, it is ordered that the debtor be and the said debtor is hereby adjudged insolvent.

It is further ordered that the debtor do apply for his discharge within six months from this date.

Dated this 22nd day of January 1935.

J. N. SEN, Sub-Judge.

(355—1)

ORDER OF ADJUDICATION.

Section 27 of the Provincial Insolvency Act, V of 1920.

In the 4th Court of the Sub-Judge at Alipore.

INSOLVENCY APPLICATION No. 339 OF 1934.

PURSUANT to a petition, dated 8th August 1934, filed by F. M. Coutts of Port Commissioners' Quarters, Majherhat, police-station South Division Port Police, and on the application of the debtor himself and on reading his application and hearing his pleader, it is ordered that the debtor be and the said debtor is hereby adjudged insolvent.

It is further ordered that the debtor do apply for his discharge within six months from this date.

Dated this 23rd day of January 1935.

J. N. SEN, Sub-Judge.

(357—1)

ORDER OF ADJUDICATION.

Section 27 of the Provincial Insolvency Act, V of 1920.

In the 4th Court of the Sub-Judge at Alipore.

INSOLVENCY APPLICATION No. 381 OF 1934.

PURSUANT to a petition, dated 1st September 1934, filed by Sukhamoy Ghosh of Palpara Baranagar, police-station Baranagar, and on the application of the debtor himself and on reading his application and hearing his pleader, it is ordered that the debtor be and the said debtor is hereby adjudged insolvent.

It is further ordered that the debtor do apply for his discharge within six months from this date.

Dated this 22nd day of January 1935.

J. N. SEN, Sub-Judge.

(360—1)

In the 4th Court of the Sub-Judge of 24-Parganas.

INSOLVENCY CASE No. 519 OF 1934.

Sadhu Charan Das of Nadia, police-station Basirhat, 24-Parganas, applicant.

To Champa Lal, Sahan Lal of Tallygunge Intelkhola, police-station Tallygunge, and others, creditors.

ON the 22nd day of January 1935 it was ordered that the matter of the petition of the applicant be heard on the 18th day of March 1935, and that the said applicant do attend to be examined by this Court on that date.

J. N. SEN, Sub-Judge.

Alipore, the 23rd January 1935. (367—1)

In the 4th Court of the Sub-Judge of 24-Parganas.

INSOLVENCY CASE No. 4 OF 1935.

Ram Kissen Shaw of Ballygunge Sen Bazar, police-station Tollygunge, applicant.

To N. Ramji of Chata Gali, Calcutta, and others, creditors.

ON the 23rd day of January 1935 it was ordered that the matter of the petition of the applicant be heard on the 18th day of March 1935, and that the said applicant do attend to be examined by this Court on that date.

J. N. SEN, Sub-Judge.

Alipore, the 25th January 1935. (370—1)

In the 4th Court of the Sub-Judge of 24-Parganas.

INSOLVENCY CASE No. 9 OF 1935.

Purna Chandra Samal of Shyamnagar, police-station Noapara, 24-Parganas, applicant.

To Munda Singh of Garulia, 24-Parganas, and others, creditors.

ON the 22nd day of January 1935 it was ordered that the matter of the petition of the applicant be heard on the 18th day of March 1935, and that the said applicant do attend to be examined by this Court on that date.

J. N. SEN, Sub-Judge.

Alipore, the 23rd January 1935. (372—1)

In the 4th Court of the Sub-Judge of 24-Parganas.

INSOLVENCY CASE No. 14 OF 1935.

Kali Charan Das of 38-4, South Road, Entally, police-station Beniapuker, applicant.

To Golam Rahaman of 38, South Road, Entally, and others, creditors.

ON the 23rd day of January 1935 it was ordered that the matter of the petition of the applicant be heard on the 18th day of March 1935, and that the said applicant do attend to be examined by this Court on that date.

J. N. SEN, Sub-Judge.

Alipore, the 25th January 1935. (373—1)

In the 4th Court of the Sub-Judge of 24-Parganas.

INSOLVENCY CASE No. 21 OF 1935.

Lal Pariksha Dosad of 26, Hughes Road, police-station Entally, 24-Parganas, applicant.

To Kadu Khan of 23-3, Pottery Road, Entally, Calcutta, and others, creditors.

ON the 22nd day of January 1935 it was ordered that the matter of the petition of the applicant be heard on the 18th day of March 1935, and that the said applicant do attend to be examined by this Court on that date.

J. N. SEN, Sub-Judge.

Alipore, the 23rd January 1935. (375—1)

In the 4th Court of the Sub-Judge of 24-Parganas.

INSOLVENCY CASE No. 22 OF 1935.

Ram Bilash Das of Kachrapara, police-station Bijpore, applicant.

To Sadhu Singh and Ram Brich Singh of Manicktolla, Kanchrapara, police-station Bijpore, and others, creditors.

ON the 22nd day of January 1935 it was ordered that the matter of the petition of the applicant be heard on the 18th day of March 1935, and that the said applicant do attend to be examined by this Court on that date.

J. N. SEN, Sub-Judge.

Alipore, the 23rd January 1935. (376—1)

In the 4th Court of the Sub-Judge of 24-Parganas.

INSOLVENCY CASE No. 26 OF 1935.

Kalipada Das of 7, Satcowri Mitra Lane, police-station Manicktolla, applicant.

To Ganga Charan Marwari of 64, Ratan Sarker Garden Street, Calcutta, and others, creditors.

ON the 23rd day of January 1935 it was ordered that the matter of the petition of the applicant be heard on the 18th day of March 1935, and that the said applicant do attend to be examined by this Court on that date.

J. N. SEN, Sub-Judge.

Alipore, the 25th January 1935. (378—1)

In the 4th Court of the Sub-Judge of 24-Parganas.

INSOLVENCY CASE No. 32 OF 1935.

Fakir Mohamed of 25-1, Park Circus, police-station Ballygunge, applicant.

To Hafez Golam Sarwar Koranni Elahi of 150, Harrison Road, Calcutta, and others, creditors.

ON the 25th day of January 1935 it was ordered that the matter of the petition of the applicant be heard on the 18th day of March 1935, and that the said applicant do attend to be examined by this Court on that date.

J. N. SEN, Sub-Judge.

Alipore, the 28th January 1935. (380—1)

In the 4th Court of the Sub-Judge of 24-Parganas.

INSOLVENCY CASE No. 33 OF 1935.

Biswambhor Karmaker of 71, Harish Chatterjee Street, police-station Bhowanipore, applicant.

To Manmatha Nath Bose of 19, Rupchand Mukherji Lane, Bhowanipore, and others, creditors.

ON the 24th day of January 1935 it was ordered that the matter of the petition of the applicant be heard on the 18th day of March 1935, and that the said applicant do attend to be examined by this Court on that date.

J. N. SEN, Sub-Judge.

Alipore, the 28th January 1935. (381—1)

In the 4th Court of the Sub-Judge of 24-Parganas.

INSOLVENCY CASE No. 543 OF 1934.

Shimoda Matsutaru of 11, Watgunge Street, 24-Parganas, applicant.

To Satish Chandra Mitter of 2, Loudon Street, Calcutta, and others, creditors.

ON the 30th day of January 1935 it was ordered that the matter of the petition of the applicant be heard on the 18th day of March 1935 and that the said applicant do attend to be examined by this Court on that date.

J. N. SEN, Sub-Judge.

Alipore, the 1st February 1935. (494—1)

MAULVI A. NURAL HAQUE intends to be admitted as an Advocate of the High Court.

(509—4)

KEDARMULL BRAHMIN intends to be admitted as an Advocate of the High Court.

(438—4)

TARACHAND SARAF intends to be admitted as an Advocate of the High Court.

(439—4)

MR. SAROJENDRA MOHAN ROY CHOWDHURY, M.A., B.L., desires to be enrolled as an Advocate of the Calcutta High Court.

(366—4)

MR. SHAIKH NABI BUKHSH, B.A., B.L., intends to practise as an Advocate, High Court, Calcutta.

(387—4)

MR. GURUPRASAD GHOSH intends to be enrolled as an Advocate of the High Court, Calcutta.

(388—4)

MR. BIBHOR KUMAR LAHIRI, B.L., intends to practise as an Advocate, High Court.

(389—4)

MR. KAMAKHYA DAS BANDYOPADHYAY, B. Sc., B.L., intends to be enrolled as an Advocate, High Court.

(390—4)

JNANENDRA NATH BAKSI, M.A., B.L., desires to be enrolled as an advocate of the High Court.

(391—4)

KAMAKHYAPADA CHAKRABORTY, M.A., B.L., desires to be enrolled as an Advocate of the High Court.

(392—4)

MR. JOTINDRA MOHON PAUL intends to practice as an Advocate, High Court, Calcutta.

(393—4)

MONOHAR CHATTERJEE intends to be enrolled as an Advocate of the Calcutta High Court.

(394—4)

MR. BINODEBIHARI HALDER, M.A., B.L., intends to be enrolled as an Advocate, Calcutta High Court.

(395—4)

DHIRENDRANATH MUKHOPADHYAY, B.L., intends to be enrolled as an Advocate.

(396—4)

JITENDRA KUMAR MITRA, M.A., B.L., wishes to be enrolled as an Advocate of the Calcutta High Court.

(398—4)

MR. ACHYUTACHARAN CHATTOPADHYAY, B.L., desires to be enrolled as an Advocate of the High Court, Calcutta.

(402—4)

MR. NIKHIL CHANDRA GANGOPADHYAY, B.L., desires to be enrolled as an Advocate of the High Court, Calcutta.

(403—4)

MR. SATYA BHUSAN DE, B.L., intends to practise as an Advocate, High Court. (404—4)

MR. KIRAN CHANDRA BOSE, B.L., intends to be enrolled as an Advocate of the High Court, Calcutta. (413—4)

MR. JAGAT CHANDRA SARKAR, M.A., B.L., intends to be enrolled as an Advocate of the High Court, Calcutta. (414—4)

AMIYA NATH DEY, B.L., intends to be admitted as an Advocate of the High Court, Calcutta. (418—4)

MR. PANKOJ NATH MUKHERJI, B.L., desires to be enrolled as an Advocate of the Calcutta High Court. (432—4)

MR. GIRIJA KUMAR DAWN intends to be enrolled as an Advocate of the Calcutta High Court. (405—4)

MR. MANORANJAN SEN, M.Sc., B.L., intends to be enrolled as an Advocate of the High Court, Calcutta. (428—4)

MR. BHUPENDRA NATH DAS GUPTA intends to be enrolled as an Advocate. (450—4)

MR. PRITIBHUSHAN BARMAN, B.L., desires to be enrolled as an Advocate of the Calcutta High Court. (451—4)

MR. KALIDAS DE CHOUDHURI, M.A., B.L., intends to be enrolled as an Advocate, High Court. (539—4)

MR. A. B. M. FAZLE RABBI intends to be enrolled as an Advocate, Calcutta High Court. (540—4)

MR. ABHAYA PADA CHAKRAVARTI, M.A., B.L., intends to be enrolled as an Advocate, High Court. (507—4)

MR. JITENDRA NATH CHATTERJEE, M.A., B.L., intends to be enrolled as an Advocate of the High Court, Calcutta. (538—4)

MR. PRABODH CHANDRA MAITRA, LL. B., intends to be enrolled as an Advocate, Calcutta High Court. (562—4)

ASHRAFUDDIN CHAUDHURY, LL.B., intends to be enrolled as an Advocate of the High Court, Calcutta. (571—4)

APPLICATIONS are invited for the post of Assistant Warden of Weights and Measures, Department of Industries, Bombay. Qualified officers already in the service of Government may apply through their superior officers and others direct to Director of Industries, Bombay.

Pay.—Rs. 150—10—250—efficiency bar—15—400.

Allowances.—Headquarters of the post are in Bombay City; no allowances are attached to the post.

Qualifications.—Minimum educational qualification required is a first class degree in Engineering (Mechanical or Electrical) or Physics and Mathematics of a recognised University. Candidates having both a Physics degree and an Engineering degree will be preferred. Candidates must also have had practical workshop experience and preferably experience in connection with verification and stamping of weights and measures. Candidates should know at least one vernacular of the Presidency. Preference will be given by Government to candidates from the Muhammadan, Intermediate and Backward Classes who are domiciled residents of the Bombay Presidency, if such persons are on the list of candidates most suitable for appointment submitted by the Selection Board.

Age.—Candidates should ordinarily be not more than 35 years of age at the time of appointment, but the age limit may be relaxed in the case of candidates who possess special qualifications or experience.

Conditions of appointment.—The selected candidate will be subject to such conditions of service, including leave and pension, as may be prescribed by the local Government for new entrants. He will be on probation for one year. Applicants who may be called to Bombay for an interview will have to come there at their own expense. Selected candidate may be required to join his appointment from 15th April 1935.

Applications.—(*a*) Applications should be complete with evidence as to age and place of birth, caste, and details of educational qualifications (with classes obtained and dates of examination), previous experience, and whether employed at present or not.

Copies (which will not be returned) of testimonials regarding character and fitness for the post from heads of institutions or firms in which the applicant has studied or been employed during the last three years must be submitted.

(*b*) Applications should be sent by registered post to the Director of Industries, Bombay, and must reach him on or before the 10th March 1935.

(*c*) Candidates who have applied previously for the same post on or before 20th December 1934, need not submit fresh applications.

(*d*) Canvassing for appointment will be a disqualification.

Bombay, 18th February 1935. (610—1)

Public Service Commission (India).

APPLICATIONS are invited for a post of Physiological Botanist for a scheme of fruit research financed by the Imperial Council of Agricultural Research. (2) Qualifications required are: (*a*) An Honours Degree in Botany or a degree in Agriculture with specialisation in Economic Botany or the equivalent; (*b*) Practical training in the physiology of higher plants. Candidates must have carried out research work in Plant Physiology and be capable of planning and carrying out independent research; and (*c*) Practical knowledge of plant biochemistry. Special attention will be paid to a candidate's suitability for research work on fruit-growing and his ability to carry out personally detailed observations in the orchard. (3) The officer appointed will be required to undergo training for at least one year and carry out research work under direction, on the alternate-year bearing of fruit trees, in England. Pay during training £216 per annum exclusive of fees to be met by Government. Second class steamer passage to England and back on completion of training. (4) Pay in India Rs. 250—25—750. Initial pay according to age, experience and qualifications. (5) Preference to candidates below 35 years of age. (6) Appointment temporary for a period of two years from date of return from England in the first instance. Probation six months. (7) Government servants eligible if permitted to apply by their departments. (8) Last date for receipt of applications, 25th March 1935. Prescribed application forms and further particulars can be obtained from the Secretary, Public Service Commission, Delhi. Applicants for forms must mention the name of the post.

Delhi, the 21st February 1935. (647—1)

Public Service Commission (India).

APPLICATIONS are invited for the post of a Chief Mining Engineer for the Northern India Salt Revenue Department. (2) Candidates should hold a diploma or degree of a recognised school of mines, should have a thorough knowledge of geology and must have at least five years' experience in a mine. Knowledge of the principles of commercial accounting will be considered an additional qualification. (3) Pay Rs. 1,000—50—1,400. Age between 30 and 40 years. (4) Appointment for five years, terminable by six months' notice on either side. Probation six months. (5) Government servants eligible if permitted to apply by their departments. (6) Last date for receipt of applications, 22nd April 1935. Prescribed application forms and further particulars can be obtained from the Secretary, Public Service Commission, Delhi. Applicants for forms must mention the name of the post.

Delhi, the 26th February 1935.

(648—1)

WANTED a Muhammadan Vernacular Teacher for the Chittagong Government Moslem High School, in the scale of Rs. 50—4-2—90—5-2—100.

Preference will be given to a Graduate with experience in teaching.

The application containing the following information should be submitted to this office on or before the 20th March 1935 :—

1. Name of father.
2. Native place—
   (*a*) Village.
   (*b*) Post Office.
   (*c*) Thana.
   (*d*) District.
3. Age on 1st March 1935 (calculated according to the Matriculation Certificate).
4. Teaching experience.

M. A. JAAFAR,

Inspector of Schools, Chittagong Division.

WANTED a Professor of English for the Bethune College, Calcutta, from July 1935. The post is in the Women's Branch of the Bengal Educational Service, the pay of which is Rs. 150—30/2—240—20/2—420. The person appointed will be on probation for two years.

2. Candidates for direct appointment must be British subjects and not more than 45 years of age.

They must have a first or second class Master's degree in English of an Indian University, or a good Honours degree in that subject of a European University, and must produce evidence of satisfactory teaching experience.

3. Women officers in the Subordinate Educational Service having the requisite qualifications are permitted to apply for the post.

4. Canvassing of any description will render a candidate liable to disqualification.

5. Applications, together with documentary evidence of the qualifications possessed, and of age, should be submitted, in duplicate, to the Principal, Bethune College, Calcutta, on or before 31st March 1935.

---

1. WANTED a Professor of Geology at Presidency College, Calcutta.

The post is in the Bengal Educational Service, Grade I, the pay of which is Rs. 300—50/2—700—75/2—1,000, with efficiency bars after the 14th and 19th stages, and the initial pay of the person appointed will, if he holds no substantive appointment in Government service, vary from Rs. 300 to Rs. 550 per month, according to age.

2. Candidates for direct recruitment should be British subjects and between the ages of 25 and 35.

They must possess the highest academical qualifications and produce evidence of specialisation in some branch of Geology, of capacity for original research, and of satisfactory teaching experience, preferably in classes of University standing.

3. Officers in the Bengal Educational Service are permitted to apply for the post.

4. Canvassing of any description will render a candidate liable to disqualification.

5. Applications supported by documentary evidence of age and qualifications, and by testimonials as to character, should be submitted in triplicate, to the Principal, Presidency College, on or before 31st March 1935.

WHEREAS Chintamohan Sarkar and others have instituted Suit No. 2 of 1934 under section 106, Bengal Tenancy Act, alleging that the public have no right of easement in the khal, plot No. 2047/2973 of mauza Taluk Harati, No. 41, in police-station Lalmanirhat, district Rangpur, recorded as appertaining to the holding in the present finally published khatian No. 815 of the defendants, Payerullah Sarkar and another, and claiming the said plot in their actual possession as appertaining to their interest in present khatian No. 758 of the said mauza,

It is hereby published that the said suit will be heard on the 28th of March 1935 next at Camp Lalmanirhat, district Rangpur, and that anyone desiring to contest the said suit shall appear and file a written statement on the aforesaid date before this Court.

NISI K. BASU, Assistant Settlement Officer.

Camp Lalmanirhat, Rangpur, the 2nd March 1935.

(649—1)

NOTICE is hereby given that all exhibits filed in cases desposed of in this Court during the year 1932 will be destroyed if not taken back before 31st March 1935 by parties who filed them.

N. N. GUPTA, Municipal Magistrate, Calcutta.

Town Hall, Calcutta, the 9th January 1935.

NOTICE is hereby given that all exhibits filed in cases disposed of in this Court during the year 1932 will be destroyed if not taken back before 31st March 1935 by the parties who filed them.

A. MAJID, Municipal Magistrate, Calcutta.

Town Hall, Calcutta, the 9th January 1935.

THE Bengal and Madras Service Family Pension Fund which is provisionally managed and assisted by Government has for its object the provision of monthly pensions for the maintenance of the widows and children of subscribers and is open, with certain exceptions, to all active and pensioned members of the Uncovenanted service of Government (except those serving under the Government of Bombay), and to Local Fund servants earning pensions from Government. Some of the special features of the fund are (1) that widowed daughters incapable of re-marriage or children labouring under such mental or bodily infirmities as incapacitate them from earning their livelihood or preclude the possibility of marriage (in case of a daughter) are admitted to its benefits ; and (2) that subscribers to the Widows and Daughters' branches are entitled to a refund of 30 per cent. of the premia paid, should the nominee predecease them after five years of admission. The second quinquennial valuation of the Fund has been completed by the Actuary to the Government of India, and his report discloses very favourable results. For forms of application and rules of the Fund apply to the Accountant-General, Bengal, Imperial Secretariat Buildings, Calcutta.

Road Cess Notification.

The district board of Mymensingh at their special meeting held on the 26th January 1935 resolved to levy cess during the next financial year 1935-36, under section 46 of the Bengal Local Self-Government Act at the maximum rate of 6 pies in the rupee on the annual value of lands, etc.

S. AHMAD, Chairman, District Board.

Mymensingh, the 22nd February 1935. (617—3)

Road Cess Notification.

THE district board of Murshidabad at a special meeting held on the 16th February 1935 resolved to levy road cess for the year 1935-36 at the maximum rate of six pies in the rupee on the annual value of lands, etc.

S. N. SINHA, Chairman, District Board.

Berhampore, the 24th February 1935. (630—2)

Road Cess Notification.

THE district board of Noakhali at their special meeting held on the 19th January 1935 resolved to levy road cess in the Noakhali district during the year 1935-36 at the maximum rate of six pies in the rupee on the annual value of land, etc.

A. GOFRAN, Chairman, District Board.

Noakhali, the 28th February 1935. (638—2)

Road Cess Notification.

THE district board of Jessore at their special meeting held on the 28th February 1935, resolved, under section 46 of the Bengal Local Self-Government Act, to levy road cess during the next year 1935-36, at the maximum rate of six pies in the rupee on the annual value of all lands, etc., in the district of Jessore.

S. N. ALI, Chairman, District Board.

Jessore, the 28th February 1935. (642—2)

Road Cess Notification.

IT is hereby notified for general information that the district board of Dacca at their special meeting held on the 26th February 1935 determined that the road cess should be levied in the district of Dacca during the ensuing financial year 1935-36 at the maximum rate of six pies in the rupee on the annual value of lands, etc.

K. SHAHABUDDIN, Chairman, District Board.

Dacca, the 28th February 1935. (653—1)

Custom House Notice.

NOTICE is hereby given that whereas Messrs. Hongkong and Shanghai Banking Corporation have failed to meet the demand made for duty on 2 packages of calendars marked K 9651/52 *ex ss.* "Rauenfels" and bonded at the Bengal Bonded Warehouse under warehousing bill of entry No. 82 of 17th December 1931, the said goods will be sold by auction on the 12th March 1935 at noon in Messrs. Mackenzie Lyall and Company's sale room under the provisions of section 119 of the Sea Customs Act.

W. J. WARD, Collector of Customs.

Calcutta Custom House, the 23rd February 1935.

(621—2)

The Commissioners for the Port of Calcutta.

NOTICE.

6½ per cent. Debenture Loan of 1930 for Rs. 60 lakhs.

THE Commissioners hereby give notice pursuant to the power reserved at the time of issue that they will pay off on the 15th September 1935 the debentures of the above issue.

No interest will accrue on these debentures after the 14th September 1935.

By order,

C. W. T. HOOK, Secretary.

The 27th February 1935. (626—1)

The Commissioners for the Port of Calcutta.

NOTIFICATION No. 139.

IT is hereby notified for general information, under the provisions of section 107 of the Calcutta Port Act, III (B. C.) of 1890, and with the approval of the Local Government, that on and from the date of publication of this notification, the rates laid down in section 14(*b*) of the Commissioners' Scales of Charges will be applied to millet and all the commodities enumerated under the heading "Grain and pulses" in the General Classification of Goods published by the Indian Railway Conference Association, and not only to rice, paddy, gram, maize, dhal and lentils.

By order of the Commissioners,

C. W. T. HOOK, Secretary.

The 28th February 1935. (634—1)

NOTICE is hereby given that Sagarmull Khemka has on and from the 25th June 1933 retired from our firms, namely: Ramkissendas Sewdoyal of No. 63, College Street, Calcutta, Kishori Rice Mill of post office Belda, district Midnapore, Gopal & Co. of post office Bishnupur, district Bankura and Ramkissendas Sewdoyal of No. 416, Mint Street, Madras.

SEWDIAL KHEMKA.
JAMUNADAS KHEMKA.

Calcutta, the 13th February 1935. (487—1)

Currency Note.

PORTION of the following Currency Note of the Calcutta Circle is stated to have been destroyed, and payment of its value has been claimed by the person whose name is placed against the number. Any other person claiming a right to it is warned to communicate at once with the undersigned :—

Register No.	Number of note.	Value. Rs.	Name of claimant.
WD10—34/35	S/78, 030434	100	Fatik Karikar, village and post-office Kashimari, district Khulna.

K. K. CHETTUR, Currency Officer.

Currency Office, Calcutta, the 20th February 1935.

Currency Notes.

PORTIONS of the following Currency Notes of the Calcutta Circle are stated to have been destroyed, and payment of their value has been claimed by the person whose name is placed against the numbers. Any other person claiming a right to them is warned to communicate at once with the undersigned :—

Register No.	Number of notes.	Value. Rs.	Name of claimant.
WD11—34/35	RD/71, 59511,	100	Gouri, son of Nekko Mahajan, village Uchapind, post-office Billawar, tahsil Basohli, district Kathua, Jammu State.
	RE/67, 37546.	100	

K. K. CHETTUR, Currency Officer.

Currency Office, Calcutta, the 20th February 1935.

Lost, Stolen or Destroyed.

THE Government Promissory Note Nos. G025969 of the 6 per cent. loan of 1933-36 for Rs. 1,000, originally standing in the name of the Imperial Bank of India and last endorsed to Biman Chandra Bose, the proprietor, by whom it was never endorsed to any other person, having been lost, stolen or destroyed, notice is hereby given that payment of the above note and the interest thereupon have been stopped at the Public Debt Office, Imperial Bank of India, Calcutta, and that application is about to be made for the issue of duplicate in favour of the proprietor. The public are cautioned against purchasing or otherwise dealing with the above-mentioned security.

Name of the advertiser—Biman Chandra Bose.

Residence—11B, Scott Lane, Calcutta.

(628—3)

Stolen.

THE Government Promissory Note No. 252585 of the 3½ per cent. loan of 1854-55 for Rs. 1,000, originally standing in the name of Baidyanath Ghosh and Bhupendra Nath Ghosh, minors, through their guardian Saraswati Bala Ghosh, the proprietors, by whom it was never endorsed to any other person, having been stolen, notice is hereby given that payment of the above note and the interest thereupon have been stopped at the Public Debt Office, Imperial Bank of India, Calcutta, and that application is about to be made for the issue of duplicate in favour of the proprietors. The public are cautioned against purchasing or otherwise dealing with the above-mentioned security.

SARASWATI BALA GHOSH, post office Basirhat, village Basirhat, district 24-Parganas.

(223—3)

IN THE HIGH COURT OF JUDICATURE AT FORT WILLIAM IN BENGAL.

Ordinary Original Civil Jurisdiction.

In the matter of the Indian Companies Act, VII of 1913, and
In the matter of the Belsund Sugar Company, Limited.

NOTICE is hereby given that a petition has been presented to the abovenamed Court for an order confirming the reduction of the share capital of the abovenamed Company from Rs. 20,00,000 to Rs. 16,50,000 resolved on by the special resolution passed and confirmed at extraordinary general meetings of the said Company held respectively on the 30th day of July 1934 and the 15th day of August 1934.

The said petition was directed to be heard by the said Court at the Court House, Calcutta, on Monday, the 25th day of March 1935.

ORR, DIGNAM & CO.,
Attorneys for the Company.

Calcutta, the 25th February 1935. (616—1)

In the matter of the Indian Companies Act, VII of 1913, and
In the matter of the Borooah Timber Co., Ltd.

NOTICE is hereby given that the order of the High Court of Judicature at Fort William in Bengal, dated the 4th day of February 1935, confirming the reduction of the capital of the above-named Company by cancelling capital which has been lost or is unrepresented by available assets to the extent of Rs. 60 per share upon each of the ordinary shares which have been issued and are now outstanding and by cancelling 10,000 of the existing ordinary shares which have not been taken or agreed to be taken by any person and the Minute (approved by the Court) showing with respect to the capital of the Company as altered the several particulars required by the above statute were registered by the Registrar of Joint Stock Companies on the 21st day of February 1935.

And further take notice that the said Minute is in the words and figures following:—

"The Capital of the Company is Rs. 8,00,000 divided into 20,000 ordinary shares of Rs. 40 each. Upon any increase of capital new shares may be issued with any preferential deferred qualified or special rights, privileges or conditions attached thereto."

Dated this 25th day of February 1935.

SANDERSONS AND MORGANS,
Solicitors for the Company, 26, Dalhousie Square, Calcutta.

(618—1)

In the matter of the Indian Companies Act, and
In the matter of Messrs. C. H. Chubb and Co., Ltd. (in liquidation).

Under section 217 of the Indian Companies Act.

A general meeting of the above Company will be held at its registered office No. 2, Old Court House Corner, Calcutta, on the 8th April 1935, at 11 a.m., to receive the final report of the liquidator.

Dated the 26th February 1935.

C. H. CHUBB, Liquidator.

(619—1)

In the matter of the Indian Companies Act, VII of 1913, and
In the matter of the Dinabandhu Insurance Society (in liquidation).

NOTICE is hereby given pursuant to section 209 that a meeting of the creditors of the abovenamed Company in voluntary winding up shall be held on 9th March 1935, at 5 p.m., at the liquidator's office at Maijkhar, Kuti post-office, Tippera district.

GURUDAS SAHA, Liquidator,
c-o N. N. Das & Co., 8-2, Hastings Street, Calcutta.

The 22nd February 1935. (574—1)

In the matter of the Indian Companies Act, VII of 1913, and
In the matter of the Central Loan Company, Limited. Registered Office Santragachi (Howrah).

THE following resolution has been passed at an extraordinary general meeting of the above Company held on Sunday, the 3rd March 1935, at 2 p.m.:

"That it has been proved to the entire satisfaction of this meeting that the Company cannot, by reason of the present economical distress in the country, continue its business and that it is advisable to wind it up voluntarily and that Babu Tara Kanto Chakravarty be and is hereby appointed liquidator for the purpose of such winding up."

D. SANYAL, Chairman.

Santragachi, the 26th February 1935. (620—1)

In the matter of the Indian Companies Act, 1913, and
In the matter of the Bogra Union Insurance Society (in liquidation).

PURSUANT to section 217 of the Indian Companies Act, 1913, notice is hereby given that a general meeting of the above Society will be held at Bogra on the 31st day of March 1935, at 2 p.m., for the purpose of laying before it an account of the winding up, showing how the winding up has been conducted and the property of the Society has been disposed of and giving any explanation thereof.

MD. A. BARI, Liquidator.

Bogra, the 15th February 1935. (629—1)

In the matter of the Indian Companies Act, VII of 1913, and
In the matter of the Delta Co. & Sea Fisheries, Ltd. (in liquidation).

THE creditors of the abovenamed Company are required on or before the 16th day of March 1935 to send their names and addresses and the particulars of their debts or claims and the names and addresses of their attorneys (if any) to the Official Liquidators of the said Company, at No. 4, Lyons Range, Calcutta, and, if so required by notice in writing from the Official Liquidators, shall, either in person or by their attorneys, prove their said debts or claims at such time as shall be specified in such notice, or in default thereof they will be excluded from the benefit of any distribution made before such debts are proved.

The 18th day of March 1935 at 11 o'clock in the forenoon at the said 4, Lyons Range, Calcutta, is appointed for the investigation of debts and claims.

Dated this 1st day of March 1935.

DAVID MITCHELL,
for Self and Co-Official Liquidators.

(643—1)

NOTICE is hereby given that the partnership heretofore subsisting between myself Mussamut Jamni and Chhoganmall and Mohanlal, carrying on business in jute, grains, linseed and as commission agents at 46, Strand Road, in the town of Calcutta, under the style or firm of Kodamall Ramballav, has been dissolved by mutual consent and agreement as and from the 23rd day of March 1934 so far as concerns me, the said Mussamut Jamni, who retired on the said date from the said firm. All debts due to and owing by the said firm will be received and paid respectively by Chhoganmall and Mohanlal who will continue to carry on the said business in co-partnership under the style or firm as aforesaid.

Dated this 26th day of February 1935.

MUSSAMUT JAMNI.

(635—1)

NOTICE is hereby given that the partnership heretofore subsisting between we two Chhoganmall and Mohanlal and Mussamut Jamni, Chhoganlal, Lachminarayan, Hazarimal and Hurrackchand, carrying on business in jute, grains, linseed and as commission agents at Gouripore and at Dhubri both in the district of Assam, under the respective styles or firms of Ramballav Pannalal and Ramballav Mohanlal, have been dissolved by mutual consent and agreement as and from the 23rd day of March 1934 so far as concerns us, the said Chhoganmall and Mohanlal, who retired on the said date from the said two firms. All debts due to and owing by the said two firms will be received and paid respectively by Mussamut Jamni, Chhoganlal, Lachminarayan, Hazarimall and Hurrackchand who will continue to carry on the said business in co-partnership under the styles or firms as aforesaid.

Dated this 26th day of February 1935.

CHHOGANMALL AND MOHANLAL.

(636—1)

INDIAN LAW REPORTS.

CALCUTTA SERIES of Indian Law Reports from 1876 onwards are available in the Publication Branch, Bengal Government Press, Alipore, Bengal. Enquiries for these may be made to Superintendent, Government Printing, at the above address. Monthly parts from 1930 onwards are available at the Sales Department, Writers' Buildings, Calcutta—

Prices.

From 1876 to 1933— Rs.

Complete yearly volume 12 { (postage Rs. 3 Inland). (,, Rs. 4 Foreign).

From 1930 onwards—

Monthly parts only .. 2 { (As. 2 Inland). (As. 3 Foreign).

Enquiries for other series than Calcutta must be made to the publishers concerned.

C. R. BATTERSBY,

Supdt., Govt. Printing, Bengal.

Alipore, the 6th December 1934.

Imperial Library.

Secretariat Buildings, 6, Esplanade East, Calcutta). Open on—

Week days and Saturdays from 10 a.m. to 7 p.m. Sundays and Gazetted holidays from 2 p.m. to 5 p.m.

THE Imperial Library is also a Lending Library. It is free to all except children. There is no subscription to pay.

K. M. ASADULLAH, Librarian.

Descriptive Catalogue of Sanskrit Manuscripts.

PARTS I, II and III of a Descriptive Catalogue of the Sanskrit Manuscripts in the Library of the Calcutta Sanskrit College, prepared by Pandit Hrishikesh Sastri and Babu Siva Chandra Gui, M.A., B.L., of that College, are offered to the public for sale. The Catalogue having to be completed in 23 parts the price of each part is 12 annas a copy exclusive of postage. Copies can be obtained from the Principal of the Sanskrit College, Calcutta.

GOVERNMENT OF BENGAL.

FINANCE DEPARTMENT.

Miscellaneous.

Calcutta, the 20th October 1927.

NOTICE.

IN supersession of the orders issued in notice, dated the 10th June 1922, published in the *Calcutta Gazette*, dated the 14th June 1922, the following revised rates have been fixed for the *Calcutta Gazette* and its parts with effect from the date of this notice. This will not, however, affect the subscriptions already paid at previous rates until they have expired :—

	Rs	With postage. Rs.	A.
Per annum—			
Entire	31	37	8
Part I	8	10	0
Part IA	2	3	0
Part IB	5	7	0
Part II	5	7	0
Parts III and IV together, or any one of them	1	1	8
Parts V and VI together, or any one of them	2	3	0
Bengal Library Catalogue ..	2	3	0
Jury Lists	3	4	0
Supplement	7	9	0

	Postage according to weight. Rs.	A.
Per issue—		
Entire Gazette (excluding Bengal Library Catalogue and Jury Lists) ..	0	12
Part I	0	4
Part IA	0	2
Part IB	0	4
Part II	0	4
Parts III and IV together, or any one of them	0	2
Parts V and VI together, or any one of them	0	2
Bengal Library Catalogue ..	0	8
Jury Lists	1	0
Supplement	0	4

2. This will not affect the orders relating to specially heavy issues, issued in Notice No. 1874 Mis., dated the 22nd August 1923, published in the *Calcutta Gazette*, dated the 29th August 1923.

J. A. WOODHEAD,

Secretary to the Government of Bengal.

CINCHONA FACTORY PRODUCTS.

By order of the Government of Bengal Cinchona Factory Products as manufactured and packed at the Cinchona Factory, Mungpoo, Darjeeling district, will be sold and distributed by the Superintendent of the **Presidency Jail**, *in original packages as* received from the Mungpoo Factory, at the rates herein noted **from the 1st May 1926 :—**

Quinine Sulphate.

For 60 lbs. and upwards at a time .. Rs. 18 per lb.

For 6 lbs. and over but less than 60 lbs. at a time .. .. .. „ 19 „

For any quantity less than 6 lbs. .. „ 20 „

Totaquina.

Irrespective of quantity .. Rs. 13-8 per lb.

Quinine Hydrochloride.

For 60 lbs. and upwards at a time .. Rs. 23 per lb.

For 6 lbs. and over but less than 60 lbs. at a time .. .. .. „ 24 „

For any quantity less than 6 lbs. .. „ 25 „

Quinine Di-Hydrochloride.

For 60 lbs. and upwards at a time .. Rs. 25 per lb.

For 6 lbs. and over but less than 60 lbs. at a time .. .. .. „ 26 „

For any quantity less than 6 lbs. .. „ 27 „

Quinidine Sulphate.

For 60 lbs. and upwards at a time .. Rs. 20 per lb.

For 6 lbs. and over but less than 60 lbs. at a time .. .. .. „ 21 „

For any quantity less than 6 lbs. .. „ 22 „

Cinchonidine Sulphate.

For 60 lbs. and upwards at a time .. Rs. 25 per lb.

For 6 lbs. and over but less than 60 lbs. at a time .. .. .. „ 26 „

For any quantity less than 6 lbs. .. „ 27 „

Cinchonine Sulphate.

For 60 lbs. and upwards at a time .. Rs. 12 per lb.

For 6 lbs. and over but less than 60 lbs. at a time .. .. .. „ 13 „

For any quantity less than 6 lbs. .. „ 14 „

*Cinchona Febrifuge (Powder).

For 60 lbs. and upwards at a time .. Rs. 9 per lb.

For 6 lbs. and over but less than 60 lbs. at a time .. .. .. „ 9 „

For any quantity less than 6 lbs. .. „ 10 „

*Cinchona Febrifuge (Tablets).

For 60 lbs. and upwards at a time .. Rs. 10 per lb.

For 6 lbs. and over but less than 60 lbs. at a time .. .. .. „ 10 „

For any quantity less than 6 lbs. .. „ 11 „

Quinoidine (Tablets).

For 60 lbs. and upwards at a time .. Rs. 5 per lb.

For 6 lbs. and over but less than 60 lbs. at a time .. .. .. „ 5 „

For any quantity less than 6 lbs .. „ 6 „

Quinoidine (in Mass).

For 60 lbs. and upwards at a time .. Rs. 4 per lb.

For 6 lbs. and over but less than 60 lbs. at a time .. .. .. „ 4 „

For any quantity less than 6 lbs. .. „ 5 „

Cinchona Bark (in 50 pound original bags).

Per bag .. .. .. Rs. 25.

Quinine Tablets per box of 200 tablets each.

Rs. 2-8 (Bengal), Rs. 3 (outside Bengal)

Rs. 15-8-0 per lb.

Transit charges extra in every case.

Cinchona Febrifuge** is for sale to Government and Charitable Institutions, Local Bodies and Missionaries only. **It is not for sale to Private Firms or the General Public.

Quinine Sulphate is now open for sale to the Public at the above rates. But it will be supplied to Hospitals and Dispensaries of this Presidency only at the wholesale rate of Rs. 18 per pound irrespective of quantities.

Five and ten boxes of Quinine Tablets are sold to the public at the concession rates which will be intimated on application.

Provinces other than Bengal, Bihar and Orissa and Assam will get their supplies of Sulph. Quinine from the Director, Botanical Survey of India, Sibpur, Howrah.

Local sale at the jail gate from 10 to 12 noon.

The system of payment is by—*Cash in advance*—by "*Treasury Challans*," which should accompany the order or indent.

In cases where this is not possible, payment should be made by "*Remittance Transfer Receipts*" or crossed "*Cheques.*"

Indents unaccompanied by cash in advance will be sent Value Payable Post. Credit sale is not allowed except under special circumstances.

In the case of *Government officers* payments will be recovered by *Book Transfer, i.e., Countersigned Invoices*, in the event of *Cash* not accompanying the indent by "*Treasury Challans*," *Remittance Transfer Receipt or Cheque.*

2. Price and postage must accompany the price of the drug (when the drug is required by post).

The name of the Railway and Steamer Station or Post Office must be written distinctly when the parcels are required by Rail, Steamer or by Post. Railway parcels are sent by passenger train only.

A scale of postage is given below.

	1 oz.	2 ozs.	4 ozs.	½ lb.	¾ lb.	1 lb.
	As.	As.	As.	As.	As.	Rs. A.
Quinine Sulph. ..	..	..	7	7	11	0 11
Cinchona Feb. ..	..	..	7	7	11	0 11
Cinchona Feb. Tablets	..	..	7	7	11	0 11
Quinoidine Tablets ..	..	..	..	..	..	1 13
Quinine Hydrochlor. ..	5	5	7	7	..	0 11
Quinine Di-hydrochlor.	5	5	7	7	..	0 11
Quinine Tablets ..	..	..	7	7	11	0 11

	1½ lb.	2 lb.	3 lb.	4 lb.	5 lb.	6 lb.
	Rs. A.	Rs. A.	Rs. A.	Rs. A.	Rs. A.	Rs. A.
Quinine Sulph. ..	0 15	1 3	1 7	1 15	2 7	2 15
Cinchona Feb. ..	0 15	0 15	1 7	1 11	1 15	2 7
Cinchona Feb. Tablets	1 3	1 3	1 11	1 15	2 7	2 15
Quinoidine Tablets ..	..	2 3	3 3	..	..	..
Quinine Hydrochlor. ..	1 1	0 15	1 7	1 11	..	..
Quinine Di-hydrochlor.	1 1	0 15	1 13	2 5	..	..
Quinine Tablets ..	0 15	0 14	1 7	1 11	1'15	2 3

Two different drugs are not packed in the same parcel and postage must be paid separately for each kind.

N.B.—Postage stamps are not accepted as revenue.

Government reserve the right to alter the price without notice.

Government Publications for Sale

At the Bengal Government Press (Publication Branch)

Sales Office, Writers' Buildings, Calcutta.

Customers in the United Kingdom and the Continent of Europe may obtain the publications either direct from the High Commissioner's Office or through any book-seller.

NOTICE—Books required for private use can be purchased. Applications should be accompanied by remittance in each case.

All remittances on account of subscriptions to or enquiries regarding prices of Gazettes, Indian Law Reports or other Government publications available for sale should be addressed to the Superintendent, Government Printing, Bengal Goverment Press, Alipore. Advices of remittances should be sent to the same address.

Remittances on account of avertisements in official publications should be addressed to Accountant, Bengal Secretariat.

All remittances must include postal and packing charges which are shown in parentheses against each item in the list below.

All advertisements intended for publication in the *Calcutta Gazette* should be sent direct to the Superintendent, Government Printing, Bengal Government Press, Alipore, 24-Parganas.

Books required for the public service should be obtained through the Heads of Departments.

New Publications issued during the Current Quarter.

Legislative Council Proceedings.

For the meetings held on the 10th to 14th, 17th to 20th and 22nd December 1934, Vol. XLIV, No. 1. Re. 1-7a. (8a.).

Miscellaneous Publications.

Boards. The Bengal Miscellaneous Rules, 1934. Re. 1-1a. (6a.).

Bulletin—

"District Faridpur." As. 3 (1a.).

"District Pabna." As. 4 (2a.).

(Compiled by Bengal Board of Economic Enquiry.)

Cinchona. Seventy-second Annual Report of the Government—Plantations and Factory in Bengal for the year 1933-34. As. 5 (2a.).

Chief Engineer. Annual Report of the—, Public Health Department, Bengal, for the years 1932 and 1933. Re. 1 (2a.).

Civil List. Half-yearly—for Bengal corrected up to 1st January 1935. Rs. 3-8a. (Re.1-1a.).

Dispensaries. List of Hospitals, — and other Medical nstitutions in Bengal, corrected up to 31st December 1933. Re. 1-2a. (4a.).

Dispensaries. Annual Report on the Working of Hospitals and under the Government of Bengal for the year 1933. Rs. 2 (6a.).

Government Estates. Extracts from the—Manual, 1932, corrected up to June 1934, Chapters III, IV and V. As. 12 (3a.) in Bengali.

Justice. Report on the Administration of Civil— in the Presidency of Bengal during the year 1933. Re. 1-2a. (3a.).

Land Revenue. Report on the—Administration of the Presidency of Bengal for the year 1933-34. As. 13 (4a.).

Legislation. Effect of—List for 1933. A. 1 (1a.).

Moslem. Report of the—Education Advisory Committee, 1934. As. 4 (4a.).

Practice. The Bengal—and Procedure Manual, 1934. Re. 1 (6a.).

Publicity Board, Bengal. Pamphlets—

"Faridpuier Krishi" by Babu Binodelal Bhadra in Bengali. As. 4 (2a.).

"The Position and Powers of the Governor in the new Constitution." As. 2 (1a.).

"Unemployment Relief Scheme." As. 2 (1a.).

Tables. Chronological—for 1935. A. 1 (1a.).

Trade Unions. Report on the Working of the Indian —Act (XVI), 1926, in Bengal for the year ending 31st March 1934. As. 10 (1a.).

Trees of Northern Bengal by A. M. Cowan and J. M. Cowan. Re. 1-12a. (4a.).

Workmen's. Form "G" under the—Compensation Act. Pies 6 (1a.).

Publications issued between 1st July and 31st December 1934.

Legislative Council Proceedings.

For the meetings held on the 8th to 10th and 22nd to 24th January 1934. Vol. XLIII, No. 1. As. 14 (5a.).

For the meetings held on the 31st January to 1st February and 5th to 9th February 1934. Vol. XLIII, No. 2. Re. 1-12a. (6a.).

For the meetings held on the 13th to 15th February Vol. XLIII, No. 3. As. 8 (4a.).

For the meetings held on the 19th to 23rd and 26th to 28th February, 2nd and 5th to 10th March 1934. Vol. XLIII, No. 4. Rs. 2-12a. (12a.).

For the meetings held on the 12th to 17th and 19th to 24th March 1934. Vol. XLIII, No. 5. Rs. 2-4a. (10a.).

Acts.

Bengal Criminal Law Amendment Act (Bengal Act VII of 1934). A. 1 (1a.).

Bengal Money Lenders Act (Bengal Act VII of 1933), in Bengali. A. 1 (9p.).

Bengal Public Demands Recovery Amendment Act (Bengal Act III of 1934). A. 1 (9p.).

Bengal Smuggling of Arms Act (Bengal Act VI of 1934). A. 1 (1a.), in Hindi As. 8 (1a.), in Urdu As. 8 (1a.).

Presidency Small Cause Court (Bengal Amendment) Act (Bengal Act VIII of 1934). A. 1 (9p.).

Bengal Nurses Act (Bengal Act X of 1934). A. 1 (1a.).

Bengal Criminal Law Amendment Act, 1925, as modified up to 1st June 1934. A. 1 (1a.).

Bengal Criminal Law Amendment Act (Bengal Act VI of 1930) as modified up to 1st June 1934. A. 1 (1a.).

Bengal Cess Amendment Act (Bengal Act XI of 1934). A. 1 (1a.).

Bengal Smuggling of Arms Act (Bengal Act VI of 1934) in Bengali. As. 6 (1a.).

Index to Bengal Acts, for 1932. As. 4 (2a.).

Bengal Wakf Act (Bengal Act XIII of 1934). A. 1 (1½a.).

Calcutta Port Amendment Act (Bengal Act IV of 1934). A. 1 (9p.).

Cattle Trespass Bengal Amendment Act (Bengal Act V of 1934). A. 1 (9p).

Land Acquisition Bengal Amendment Act (Bengal Act II of 1934). A. 1 (9p.).

Licensed Warehouse and Fire Brigade Amendment Act (Bengal Act I of 1934). A. 1 (9p.).

Opium Act (Reprint of I. C. Act I of 1878) as modified up to 1st March 1934. A. 1 (1a.).

Bengal Excise (Amendment) Act (Bengal Act IX of 1934). A. 1 (9p.).

Bengal Waterways Act (Bengal Act XII of 1934). As. 2 (1½a.).

Bengal Suppression of Terrorist Outrages Act (Bengal Act XII of 1932) as modified up to 1st June 1934. A. 1 (1a.).

Bengal Tenancy Act (Reprint of I. C. Act VIII of 1885) as modified up to 1st September 1933. As. 8 (4a.).

Cattle Trespass Bengal Amendment Act (Bengal Act V of 1934) in Bengali. A. 1 (9p.).

Bills.

Untouchability. Removal of—among Hindus, in Bengali. Bill No. XVI of 1933. As. 3 (9p.).

Miscellaneous Publications.

Bulletin No. 62. Theory of Detergency and the Development of Maximum Cleansing Power in Washing Soap by Dr. R. L. Datta. As. 2 (1a.).

Budget. Civil—Estimates, 1934-35. Rs. 2 (10a.).

P. W. D.—Estimate of 60—Civil Works not charged to Revenue in Bengal Presidency, 1934-35. A. 1 (1½a.).

P. W. D.—Estimate of Provincial Civil Works in the Presidency of Bengal, 1934-35. As. 4 (3a.).

Botanic. Annual Report of the Royal—Garden and the Gardens in Calcutta and of the Lloyd—Garden, Darjeeling, 1933-34. As. 4 (1a.).

Chemical. Fifty-ninth Annual Report of the—Examiner's Department in Bengal, 1933. As. 8 (1a.).

Civil Service. Question papers set for the Bengal Junior—Examination, 1934. Re. 1 (3a.).

Constables. Major Channey's Manual for the Instruction of—in their Duties, 1934, in Bengali. As. 12 (3½a.).

Crop. Season and—Report of Bengal, 1933-34. As. 8 (2a.).

Classified List and Distribution Return of Establishment of Roads and Buildings corrected up to 1st July 1934. As. 10 (2a.).

Dispensaries. Triennial Report on the Working of Hospitals and—under the Government of Bengal, 1929-31. Rs. 2 (5a.).

Electricity. Annual Report on the Administration of the Indian—Act in Bengal, 1933. As. 6 (1½a.).

Excise. Report on the Administration of—Department in Bengal, 1932-33. Re. 1-3. (4a.).

Factories. Annual Report on the Administration of Indian—Act in Bengal, 1933. Rs. 3 (5a.).

Food-crops. Price-list of Staple—in the Local Areas of Bengal, 1932. As. 6 (1½a.), 1933. As. 9 (2a.).

Forest. Annual Progress Report on—Administration in Bengal, 1932-33. Re. 1-9a. (4a.).

Health. Reports of the—Departments of the Ports of Calcutta and Chittagong, 1933. As. 4 (1a.).

Bengal Public—Reports, 1932. Re. 1 (5a.).

Holidays. List of Public—during the year 1935. A. 1 (9p.).

Industries. Annual Administration Report of the—Department in Bengal, 1932-33. As. 8 (3a.).

Irrigation. Annual—Revenue Report of the Government of Bengal, 1931-32. Rs. 2-7a. (4a.).

Classified List and Distribution Return of Establishment of—Department in Bengal, corrected up to 1st January 1934. As. 11 (2a.), corrected up to 1st July 1934. As. 11 (2a.).

Annual—Revenue Report of the Government of Bengal, 1932-33. Rs. 3 (4½a.).

Jails. Annual Report on the Administration of—of Bengal Presidency, 1933. As. 12 (3a.).

Justice. Report on the Administration of Criminal—in Assam, 1933. As. 6 (2a.).

Justice. Report on the Administration of Civil—in Assam, 1933. As. 12 (2½a.).

Report on the Administration of Criminal—in the Presidency of Bengal, 1933. As. 3 (2a.).

Jute. Report of the Bengal—Enquiry Committee, Vol. II, 1934. Rs. 3 (10a.).

Medical Schools. Annual Report of the—in Bengal, 1932-33. Re. 1 (3a.).

Model Rules of Business for Municipalities, 1934. A. 1 (1a.).

Money Lenders. Rules and Forms under the Bengal—Act, 1933. A. 1 (1a.).

Motor Vehicles. International Circulation Rules, 1933. As. 5 (1a.).

Pharmacopœia and Diet Scales of the Presidency General Hospital, 2nd Edition, 1934. Re. 1 (2½a.).

Poisons. The—Act and Rules, 1934. As. 4 (1½a.).

Police. Annual Report on the—Administration of the Town of Calcutta and Suburbs, 1933. As. 12 (3a.).

Annual Report on the—Administration in the Bengal Presidency, 1933. As. 9 (4a.).

Proscribed Publications. List of—form 1920 to 1934 (June). Rs. 2-4a. (7a.).

Public Health. Bengal—Report, 1931. Re. 1 (5a.).

Public Instruction. Report on—in Bengal, 1932-33. As. 8 (3a.).

Public Works Department. Annual Administration Reports for Establishment, Buildings, Railways and Communications of the—in Bengal, 1932-33. As. 6 (1a.).

Registration. Statistical Return with a Brief Note of the—Department in Bengal, 1933. As. 4 (2a.).

Schools. List of—in the Burdwan Division, corrected up to 31st March 1933. As. 6 (2a.).

Settlement. Technical Rules and Instructions of the—Department, Part XI, Chapter XXII, 1934. A. 1 (1a.).

Smoke Nuisances. Twenty-eighth Annual Report of the Bengal—Commission, 1933. As. 2 (1a.-3p.).

Statistics. Agricultural—of Bengal, 1932-33. As. 7 (2a.).

Stamp. Statistical Returns regarding the Administration of the—Department in Bengal, 1933-34. As. 3 (1a.).

Steam-Launches. List of Inland Steamers and—Plying in Bengal, Bihar and Orissa, corrected up to 31st December 1933. Re. 1-1a. (1½a.).

Sundarbans. A Revenue History of—from 1765 to 1870 by F. E. Pargiter, 1934. Re. 1-12a. (8a.).

Survey. Annual Report on the—and Settlement Operations in Bengal, 1932-33. Rs. 3 (5a.).

Union Boards. List of—in Bengal, 2nd Edition, 1934. As. 7 (3a.).

Veterinary. Annual Report of the Civil—Department, Bengal, and Bengal—College, 1932-33. As. 6 (2½a.).

Workmen's. Annual Report on the Working of—Compensation Act in Bengal, 1933. As. 3 (1a.).

Registered No. C207

The Calcutta Gazette

THURSDAY, MARCH 7, 1935.

PART III

Acts of the Bengal Legislative Council.

GOVERNMENT OF BENGAL.

Legislative Department.

NOTIFICATION.

No. 2121L. — 4th March, 1935. — In pursuance of the provisions of sub-section (*3*) of section 81 of the Government of India Act, the following Act of the local legislature of Bengal, having been assented to by the Governor General on the 23rd February, 1935, is hereby published for general information.

Bengal Act III of 1935.

THE CALCUTTA MUNICIPAL (AMENDMENT) ACT, 1934.

[Published in the *Calcutta Gazette* of the 7th March, 1935.]

An Act further to amend the Calcutta Municipal Act, 1923.

WHEREAS it is expedient further to amend the Calcutta Municipal Act, 1923, in the manner hereinafter appearing ; Ben. Act III of 1923.

It is hereby enacted as follows :—

Short title.

1. This Act may be called the Calcutta Municipal (Amendment) Act, 1934.

Amendment of section 477 of Bengal Act III of 1923.

2. After clause (*xiii*) of section 477 of the Calcutta Municipal Act, 1923, the following clause shall be inserted, namely :—

" (*xiiia*) assistance to schools in which persons employed on manual labour above the ages specified in section 91 receive primary education and to *tols*, *madrasahs* and *maktabs* ;".

A. DEC. WILLIAMS,

Secy. to the Govt. of Bengal.

Registered No. C207

The Calcutta Gazette

THURSDAY, MARCH 7, 1935.

PART VI

Bills introduced in the Council of State and Legislative Assembly, Reports of Select Committees presented to the Council and Assembly, and Bills published under Rule 18 of the Indian Legislative Rules

GOVERNMENT OF INDIA.

Legislative Assembly Department.

The following Bill was introduced in the Legislative Assembly on the 12th February, 1935:—

L. A. BILL No. 5 OF 1935.

A Bill further to amend the Code of Criminal Procedure, 1898.

WHEREAS it is expedient further to amend the Code of Criminal Procedure, 1898; It is hereby enacted as follows:— V of 1898.

Short title.

1. This Act may be called the Code of Criminal Procedure (Amendment) Act, 193 .

Amendment of section 103, Act V of 1898.

2. In section 103 of the Code of Criminal Procedure, 1898,— V of 1898.

(*i*) in sub-section (*1*) for the word "locality" the word "neighbourhood" shall be substituted; and

(*ii*) the following new proviso shall be added to sub-section (*2*), namely:—

"Provided that no evidence other than the list drawn up in accordance with the provisions of this section shall be admitted to prove the articles discovered during the search."

STATEMENT OF OBJECTS AND REASONS.

Section 103 of the Code is practically a dead letter. The word "locality" has been judicially interpreted as not to mean the same quarter of the town as the place searched and it has been ruled that the stress is on the word "respectability" and not on the word "locality". This has led to the view that failure to call inhabitants of the locality as witnesses does not make a search illegal (21 Madras 83). This could hardly have been the intention of the framers of this section. In order to remove this ambiguity it is proposed to substitute the word "neighbourhood" and add a proviso to sub-section (2). This proviso will not permit the admission of evidence if the provisions of section 103 are not strictly complied with. The object of these provisions has been stated to be as aiming against possible chicanery and unfair dealings on the part of the officers conducting the searches and was made to ensure confidence that anything incriminating which may be found in the premises searched shall really be found and shall not be planted. This section really contemplates the presence of two respectable witnesses of the locality unconnected with the Government and its officers (4 Cr. L. J. 390). The present amendment is intended to invalidate the search if not conducted strictly in accordance with the provisions of this section.

SANT SINGH.

The 29th December, 1934.

MD. RAFI,

Secy. to the Govt. of India.

GOVERNMENT OF INDIA.

Legislative Assembly Department.

The following Bill was introduced in the Legislative Assembly on the 12th February, 1935:—

L. A. BILL No. 6 OF 1935.

A Bill further to amend the Code of Criminal Procedure, 1898.

WHEREAS it is expedient further to amend the Code of Criminal Procedure, 1898; It is hereby enacted as follows:— V of 1898.

Short title.

1. This Act may be called the Code of Criminal Procedure (Amendment) Act, 193 .

Amendment of section 406, Act V of 1898.

2. In section 406 of the Code of Criminal Procedure, 1898, the following proviso shall be omitted, namely: V of 1898.

"Provided that the Local Government may, by notification in the local official Gazette, direct that in any district specified in the notification appeals from such orders made by a Magistrate other than the District Magistrate or a Presidency Magistrate shall lie to the District Magistrate and not to the Court of Session."

STATEMENT OF OBJECTS AND REASONS.

This amendment is necessary because of the fact that District Magistrate himself in most cases initiates proceedings for keeping the peace. To expect him to do justice in appeal is really expecting too much from human nature. So long as District Magistrate occupies the position as the head of the police and of executive authorities of the District, these appeals should not be heard by him.

SANT SINGH.

The 29th December, 1934.

MD. RAFI,
Secy. to the Govt. of India.

GOVERNMENT OF INDIA.

Legislative Assembly Department.

The following Bill was introduced in the Legislative Assembly on the 12th February, 1935:—

L. A. BILL No. 7 OF 1935.

A Bill further to amend the Code of Criminal Procedure, 1898.

WHEREAS it is expedient further to amend the Code of Criminal Procedure, 1898; It is hereby enacted as follows:— V of 1898.

Short title.

1. This Act may be called the Code of Criminal Procedure (Amendment) Act, 193 .

Repeal of section 30, Act V of 1898.

2. Section 30 of the Code of Criminal Procedure, 1898 (hereinafter referred to as the said Code), shall be repealed. V of 1898.

Repeal of section 34, Act V of 1898.

3. Section 34 of the said Code shall be repealed.

Amendment of section 34A, Act V of 1898.

4. In section 34A of the said Code,—

(*i*) the word and figures "and 34" shall be omitted; and

(*ii*) the word "and" shall be inserted between the figures "31" and "32".

Amendment of section 35, Act V of 1898.

5. In clause (*b*) of the proviso to sub-section (*2*) of section 35 of the said Code, the brackets, words and figures, "(other than a Magistrate acting under section 34)" shall be omitted.

STATEMENT OF OBJECTS AND REASONS.

These provinces having acquired the status of Governor's province, such a discrimination shall no longer be permitted. The accused charged with serious offences are not satisfied with the trial held before Magistrates who are especially empowered under these sections. In most cases the Magistrates in their zeal to show, what they term good disposal, hurriedly proceed with the trial with the result that cool and calm consideration of the facts of the case is not possible as is actually the case in Sessions trials. As the administration is being reformed it is desirable that standard of judicial administration be also raised in these provinces in order to inspire greater confidence in the Courts.

SANT SINGH.

The 29th December, 1934.

MD. RAFI,
Secy. to the Govt. of India.

GOVERNMENT OF INDIA.

Legislative Assembly Department.

The following Bill was introduced in the Legislative Assembly on the 13th February, 1935:—

L. A. BILL No. 8 OF 1935.

A Bill to regulate the payment of wages to certain classes of persons employed in industry.

WHEREAS it is expedient to regulate the payment of wages to certain classes of persons employed in industry; It is hereby enacted as follows:—

Short title, extent, commencement and application.

1. (*1*) This Act may be called the Payment of Wages Act, 1935.

(*2*) It extends to the whole of British India, including British Baluchistan and the Sonthal Parganas.

(*3*) It shall come into force on such date as the Governor General in Council may, by notification in the Gazette of India, appoint.

(*4*) The whole of the Act extends in the first instance to the payment of wages to persons employed in any factory, and the whole of the Act except section 5 extends in the first instance to the payment of wages to persons (not being persons employed in a factory) employed upon any railway by a railway administration or by a person fulfilling a contract with a railway administration.

(*5*) The Local Government may, after giving three months' notice of its intention of so doing, by notification in the local official Gazette, extend the provisions of the Act or any of them, subject to such relaxations as may be specified in the notification, to the payment of wages to any class of persons employed in any industrial establishment or in any class or group of industrial establishments.

(*6*) Nothing in this Act shall apply to the payment of wages for any wage-period to any person whose wages by whatever periods paid amount in respect of that period to one hundred rupees a month or more.

Definitions.

2. In this Act, unless there is anything repugnant in the subject or context,—

(*i*) "factory" means a factory as defined in clause (*j*) of section 2 of the Factories Act, 1934; XXV of 1934.

(*ii*) a person is deemed to be employed in an "industrial establishment" when employed in any mine, plantation, quarry, workshop or other establishment in which articles are produced, adapted or manufactured with a view to their use, transport or sale;

(*iii*) "prescribed" means prescribed by rules made under this Act; and

(*iv*) "wages" means all remuneration which is capable of being expressed in terms of money and which is, in accordance with the terms of employment or by any contract express or implied, to be paid to any person employed in consideration of his employment or of any work done in his employment, but does not include—

(*a*) the value of any housing provided by the employer;

(*b*) any contribution paid by the employer to any pension fund or provident fund;

(*c*) any travelling allowance or the value of any travelling concession;

(*d*) any sum paid to the person employed to defray special expenses entailed on him by the nature of his employment; or

(*e*) any gratuity payable on discharge.

Responsibility of payment of wages.

3. All payments of wages, required to be made by section 5 of this Act, shall be made to persons employed—

(*a*) in factories and other industrial establishments—

(*i*) where there is a manager responsible to the employer, by the manager and

(*ii*) in other cases, by the employer;

(*b*) on railways (excluding railway factories)—

(*i*) where the employment is directly under the railway administration, by the person nominated in this behalf for the local area concerned by the railway administration, or

(*ii*) where the employment is under a contract, by the contractor.

Fixation of wage-periods.

4. (*1*) Every employer employing persons to the payment of whose wages this Act applies shall fix periods (in this Act referred to as wage-periods) on the basis of which the wages due to such persons shall be calculated.

(*2*) No wage-period shall exceed one month.

Payment of wages.

5. (*1*) The wages of every employed person shall be paid before the expiry of the seventh day from the last day of the wage-period in which the wages have been earned, unless the seventh day is a non-working day, in which case the wages shall be paid before the expiry of the first working day subsequent to such non-working day.

(*2*) Where the employment of any person is terminated by or on behalf of the employer, the wages earned by him shall be paid before the expiry of the second working day from the day on which his employment is terminated.

(*3*) Where the Local Government is satisfied that owing to special difficulties relating to the calculation or distribution of wages, any employer or class of employers cannot with reasonable diligence make payment within the time specified, it may, by general or special order, exempt to such extent and subject to such conditions as it may think fit such employer or class of employers from the operation of this section in respect of the wages of any employed person or class of employed persons:

Provided that, notwithstanding any such exemption, such portion of any wages due as can be paid without undue risk of overpayment shall be paid within the period fixed for payment under this section.

Deductions which may be made from wages.

6. (*1*) Notwithstanding the provisions of sub-section (*2*) of section 47 of the Indian Railways Act, 1890, the wages due to an employed person shall be paid to him without deductions of any kind except those authorised by this Act. IX of 1890.

Explanation.—Every payment made by the employed person to the employer or his agent shall, for the purposes of this Act, be deemed to be a deduction from wages.

(2) Deductions from the wages of an employed person shall be made only in accordance with the provisions of this Act, and may be of the following kinds only, namely:—

(a) deductions by way of fine;

(b) deductions for damage to or loss of goods expressly entrusted to the employed person for custody, or for loss of money for which he is required to account, where such damage or loss is directly attributable to his neglect or default;

(c) deductions in respect of housing accommodation supplied by the employer;

(d) deductions in respect of such other services supplied by the employer as the Governor General in Council or the Local Government or the prescribed authority may by general or special order authorise;

(e) deductions from the first wage-payment on account of recovery of advances of money given before employment began;

(f) deductions on account of advance payments of wages already earned or in adjustment of over-payments of wages;

(g) deductions on account of other advances of wages given during employment subject to any rules made by the Local Government regulating the extent to which such advances may be made and the instalments by which they may be recovered;

(h) deductions on account of income-tax payable by the employed person;

(i) deductions which are required to be made under any order of a Court or other competent authority;

(j) deductions on account of subscriptions to and repayment of advances from any recognised provident fund as defined in section 58A of the Indian Income-tax Act, 1922; and XI of 1922.

(k) deductions on account of payments to co-operative credit societies approved by the Local Government, subject to such limits as the Local Government may impose.

Deduction by way of fine.

7. (1) No deduction by way of fine shall be made from the wages of any employed person, unless a notice has been exhibited in the prescribed manner on the premises in which he is employed, or in the case of persons (not being persons employed in a factory) employed upon a railway at such place or places as may be prescribed, specifying the acts or omissions on the part of an employed person for which a fine may be imposed, nor otherwise than in accordance with such notice.

(2) Every fine shall be deemed to have been imposed on the day of the act or omission for which it was imposed.

(3) The total amount which may be imposed by way of fine in any one month on any employed person shall not exceed an amount equal to half-an-anna in the rupee of the wages earned by him in that month.

(4) No deduction by way of fine shall be made from the wages of any employed person who is under the age of fifteen years.

(5) No fine imposed on any employed person shall be recovered from him by instalments or after the expiry of sixty days from the day on which it was imposed.

(6) All deductions by way of fine and all realisations thereof shall be recorded in a register to be kept by the employer in such form as may be prescribed; and all such realisations shall be expended only on such purposes beneficial to the persons employed in the factory or establishment as are approved by the prescribed authority.

Explanation.—When the persons employed in any factory or industrial establishment are part only of a staff employed under the same management, all such realisations may be credited to a common fund maintained for the staff as a whole, provided that the fund shall be expended only on such purposes as are approved by the prescribed authority.

Deductions for damage or loss.

8. A deduction under clause (*b*) of sub-section (*2*) of section 6 shall not exceed the amount of the damage or loss caused to the employer by the neglect or default of the employed person.

Deductions for services rendered.

9. A deduction under clause (*c*) or clause (*d*) of sub-section (*2*) of section 6 shall not be made from the wages of an employed person, unless the housing accommodation or other service has been accepted by him, and such deduction shall not exceed an amount equivalent to the value of the service rendered.

Rule-making power.

10. (*1*) The Local Government may, by notification in the local official Gazette, make rules for the purpose of carrying into effect the provisions of this Act.

(*2*) In particular and without prejudice to the generality of the foregoing power, such rules may—

(*a*) require the maintenance of such records, registers and returns as are necessary for the enforcement of the Act and prescribe the form thereof;

(*b*) prescribe the authority competent to authorise deductions for services under clause (*d*) of sub-section (*2*) of section 6, and the extent to which advances may be made and the instalments by which they may be recovered with reference to clause (*g*) of sub-section (*2*) of section 6;

(*c*) prescribe the acts or omissions on the part of an employed person for which fines may be imposed and the manner in which and the conditions subject to which notice of such acts and omissions shall be given under sub-section (*1*) of section 7;

(*d*) prescribe the authority competent to approve of the purposes on which the proceeds of fines shall be expended;

(*e*) prescribe the manner of giving notice of the days on which wages will be paid;

(*f*) regulate the scales of costs which may be allowed in proceedings under this Act;

(*g*) prescribe the amount of court-fees payable in respect of any proceedings under this Act; and

(*h*) regulate the procedure to be followed by the authorities appointed under sections 12 and 14.

(*3*) The power to make rules under sub-section (*1*) shall be subject to the condition of the rules being made after previous publication.

Inspectors.

11. (*1*) An Inspector of Factories appointed under sub-section (*1*) of section 10 of the Factories Act, 1934, shall be an Inspector for the purposes of this Act in respect of all factories within the local limits assigned to him. XXV of 1934.

(*2*) A Supervisor of Railway Labour appointed under sub-section (*1*) of section 71G of the Indian Railways Act, 1890, shall be an Inspector for the purposes of this Act in respect of all persons employed upon a railway to whom this Act applies. IX of 1890.

(*3*) The Local Government may, by notification in the local official Gazette, appoint such persons as it thinks fit to be Inspectors for the purposes of this Act, and may define the local limits within which and the class of industrial establishments in respect of which they shall exercise their functions.

(*4*) An Inspector may enter on any premises, and make such examination of any register or document, and take on the spot or otherwise such evidence of any person, and exercise such other powers of inspection, as he may deem necessary for carrying out the purposes of this Act.

(*5*) Every Inspector shall be deemed to be a public servant within the meaninng of the Indian Penal Code. XLV of 1860.

Claims arising out of deductions from wages or delay in payment of wages and penalty for malicious or vexatious claims.

12. (*1*) The Local Government may, by notification in the local official Gazette, appoint any person it thinks fit as the authority to hear and decide for any specified area all claims arising out of deductions from the wages or delay in payment of the wages of persons employed or paid in that area.

(*2*) Where contrary to the provisions of this Act any deduction has been made from the wages of an employed person, or any payment of wages has been delayed, such person himself, or any legal practitioner or any official of a registered trade union authorised in writing to act on his behalf, or any Inspector under this Act, or any other person acting with the permission of the authority appointed under sub-section (*1*), may apply to such authority for a direction under sub-section (*3*):

Provided that every such application shall be presented within six months from the date on which the deduction from the wages was made or from the date on which the payment of the wages was due to be made, as the case may be.

(*3*) When any application under sub-section (*2*) is entertained, the authority shall hear the applicant and the employer or other person responsible for the payment of wages under section 3, or give them an opportunity of being heard, and, after such further inquiry (if any) as may be necessary, may, without prejudice to any other penalty to which such employer or other person is liable under this Act, direct the refund to the employed person of the amount deducted, or the payment of the delayed wages, together with the payment of such compensation as the authority may think fit, not exceeding ten times the amount deducted in the former case and not exceeding ten rupees in the latter:

Provided that no direction for the payment of compensation shall be made in the case of delayed wages, if the authority is satisfied that the delay was due to a *bonâ fide* error or dispute as to the amount payable to the employed person or was due to the failure of the employed person to apply for or accept payment.

(*4*) Any amount directed to be paid under sub-section (*3*) may be recovered in the manner provided in the Code of Criminal Procedure, 1898, for the recovery of fines. V of 1898.

(*5*) If the authority hearing any application under this section is satisfied that it was either malicious or vexatious, the authority may direct that a penalty not exceeding fifty rupees be paid to the employer or other person responsible for the payment of wages by the person presenting the application, and any such penalty may be recovered in the manner provided in the Code of Criminal Procedure, 1898, for the recovery of fines. V of 1898.

Single application in respect of claims from unpaid group.

13. (*1*) Employed persons (whether on a railway or in a factory or other industrial establishment) are said to belong to the same unpaid group if they are borne on the same establishment and if their wages for the same wage-period or periods have remained unpaid after the day fixed by section 5.

(*2*) A single application may be presented under section 12 on behalf or in respect of any number of employed persons belonging to the same unpaid group, and in such case the maximum compensation that may be awarded under sub-section (*3*) of section 12 shall be ten rupees per head.

Appeal.

14. (*1*) An appeal against a direction made under sub-section (*3*) of section 12 may be preferred, within thirty days of the date on which the direction was made, before such authority as the Local Government may appoint in this behalf—

(*a*) by the employer or other person responsible for the payment of wages under section 3, if the total sum directed to be paid by way of wages and compensation exceeds three hundred rupees, or

(*b*) by an employed person, if the total amount of wages claimed to have been withheld from him or from the unpaid group to which he belonged exceeds fifty rupees.

(*2*) Save as provided in sub-section (*1*), any direction made under sub-section (*3*) of section12 shall be final.

Powers of authorities appointed under sections 12 and 14.

15. Every authority appointed under sub-section (*1*) of section 12 or section 14 shall have all the powers of a Civil Court under the Code of Civil Procedure, 1908, for the purpose of taking evidence and of enforcing the attendance of witnesses and compelling the production of documents, and every such authority shall be deemed to be a Civil Court for all the purposes of section 195 and of Chapter XXXV of the Code of Criminal Procedure, 1898. V of 1908. V of 1898.

Penalty for offences under the Act.

16. (*1*) Whoever being responsible for the payment of wages to an employed person contravenes any of the provisions of section 5, section 6, section 7, section 8 or section 9, shall be punishable with fine which may extend to five hundred rupees.

(*2*) Whoever contravenes the provisions of section 4 or of any rule made under section 10 shall be punishable with fine which may extend to one hundred rupees.

Procedure in trial of offences.

17. (*1*) No Court shall take cognizance of a complaint against any person for an offence under sub-section (*1*) of section 16, unless an application in respect of the facts constituting the offence has been presented under section 12 and has been granted wholly or in part and the authority empowered under the latter section or the appellate authority granting such application has sanctioned the making of the complaint.

(*2*) Before sanctioning the making of a complaint against any person for an offence under sub-section (*1*) of section 16, the authority empowered under section 12 or the appellate authority, as the case may be, shall give such person an opportunity of showing cause against the granting of such sanction, and the sanction shall not be granted if such person satisfies the authority that his default was due to a *bonâ fide* error or dispute as to the amount payable to the employed person or was due to the failure of the employed person to apply for or accept payment.

(*3*) No Court shall take cognizance of an offence under sub-section (*2*) of section 16 except on a complaint made by or with the sanction of an Inspector under this Act.

(*4*) In imposing any fine for an offence under sub-section (*1*) of section 16 the Court shall take into consideration the amount of any compensation already awarded against the accused in any proceedings taken under section 12.

Bar of suits.

18. No Court shall entertain any suit for the recovery of wages or of any deduction from wages in so far as the sum so claimed—

(*a*) forms the subject of an application under section 12 which has been presented by the plaintiff and which is pending before the authority appointed under that section or of an appeal under section 14; or

(*b*) has formed the subject of a direction under section 12 in favour of the plaintiff, or

(*c*) has been adjudged, in any proceeding under section 12, not to be owed to the plaintiff; or

(*d*) could have been recovered by an application under section 12.

Contracting out.

19. Any contract or agreement, whether made before or after the commencement of this Act, whereby an employed person relinquishes any right conferred by this Act shall be null and void in so far as it purports to deprive him of such right.

Powers to be exercised by Governor General in Council.

20. The powers by this Act conferred upon the Local Government shall be exercised by the Governor General in Council in any case in which the exercise of such powers affects any persons employed by a railway administration.

STATEMENT OF OBJECTS AND REASONS.

In 1926 the Government of India addressed Local Governments with a view to ascertain the position with regard to the delays which occurred in the payment of wages to persons employed in industry, and the practice of imposing fines upon them. The investigations revealed the existence of abuses in both directions, and the material collected was placed before the Royal Commission on Labour which was appointed in 1929. The Commission collected further evidence on the subject, and the results of their examination, with their recommendations, will be found on pages 216—221 and 236—241 of their Report. The Government of India re-examined the subject in the light of the Commission's Report and in February 1933 a Bill embodying the conclusions then reached was introduced and circulated for the purpose of eliciting opinion. A motion for the reference of the Bill to a Select Committee was tabled during the Delhi session of 1933-34, but was not reached, and the Bill lapsed. The present Bill is based upon the same principles as the original Bill but has been revised throughout in the light of the criticisms received when the original Bill was circulated.

F. NOYCE.

NEW DELHI;

11th February, 1935.

NOTES ON CLAUSES.

Clause 1.—The Bill applies only to the payment of wages to persons receiving less than Rs. 100 per mensem. The provisions relating to prompt payment apply in the first instance only to factory employees, and the provisions relating to deductions apply in the first instance only to factory employees and railway workers. But it is proposed to enable Local Governments to extend any or all of the provisions of the Act to any class of persons employed in any industrial establishment, or in any class or group of industrial establishments.

Clause 2.—The definition of "wages" is designed to include payments in kind, and (with certain specified exceptions) all payments however described which are to be made to an employed person in consideration of his employment.

Clause 3.—It is necessary to fix the responsibility for the payment of wages in view of the later clauses which provide for a summary remedy in cases of delay or unlawful deduction, and for penalties.

Clause 5.—This is designed to secure that wages shall ordinarily be paid within seven days of the expiry of the period within which they were earned. But it is proposed to reduce the interval to two days when an employee is discharged. The power of conditional exemption vested in Local Governments is required mainly to remove difficulties that may arise in the exact calculation of the wages of piece-workers.

Clause 6.—It is intended that the possible deductions from wages should be of the following kinds:—

(1) Deductions by way of fines [sub-clause (2) (*a*)].

(2) Deductions for damage or loss [sub-clause (2) (*b*)].

(3) Deductions for services [sub-clause (2) (*c*) and (*d*)].

(4) Deductions on account of advances [sub-clause (2) (*e*), (*f*) and (*g*)].

(5) Deductions which the employer is compelled to make [sub-clause (2) (*h*) and (*i*)].

(6) Deductions on account of payments to certain Provident Funds and Co-operative Credit Societies [sub-clause (2) (*j*) and (*k*)].

Deductions for damage or loss can be made only in respect of (*a*) goods entrusted to an employed person for custody, or (*b*) money for which he is required to account. It is not intended to permit deductions under this head in respect of damage or loss occurring in the course of a manufacturing process, *e. g.*, in respect of spoilt cloth.

Advances are classified under three heads:—

(*i*) those made before employment begins which are recoverable only from the first wage payment;

(*ii*) those made during employment on account of wages already earned, which are not subject to restriction; and

(*iii*) other advances made during employment which are to be subject to rules made by Local Governments.

Clause 7.—It is intended that fines should be imposed only for acts or omissions specified in a regular notice. In clause 10 it is proposed to give Local Governments power to prescribe by rule the acts or omissions for which fines may be imposed. It is also proposed that fines should be limited in amount, that they should not be recoverable by instalments or after undue delay, and that they should be devoted to the benefit of employees. Sub-clause (4) is designed to prevent fines being imposed on children.

Clause 8.—Deductions for damage or loss are limited to the amount of the damage or loss actually caused to the employer.

Clause 9.—Services consist of—

(*a*) housing accommodation, and

(*b*) other services approved by competent authority.

Deductions are limited to the value of the service rendered, and the service must have been accepted by the employee.

Clause 12.—It is proposed that claims on account either of delay or of deductions should be dealt with by a special authority. This authority will have power to order the payment to the claimant of the sum wrongfully withheld *plus* compensation up to ten times that sum in the case of deductions, and Rs. 10 per head in the case of delay.

Clause 13.—Delay in payment frequently affects an entire establishment; and provision is made here for the presentation of a single application on behalf of any number of employed persons who are similarly affected.

Clause 14.—It is proposed that there should be an appeal to a special authority in cases where a substantial sum is involved.

Clauses 16 and 17.—These provide for prosecutions on account of infringements of the law; but it is intended that such prosecutions should not be instituted unless a successful claim has been made under section 12 and the authority appointed under that section or the appellate authority considers a prosecution to be warranted.

Clause 18.—It is intended that persons coming under the Act should be limited to its procedure in respect of the recovery of unpaid wages.

Clause 20.—It is desirable to secure as far as possible uniform rules applicable to railway workers, particularly as one railway system may run through two or more provinces.

MD. RAFI,

Secy. to the Govt. of India.

GOVERNMENT OF INDIA.

Legislative Assembly Department.

The following Bill was introduced in the Legislative Assembly on the 13th February, 1935:—

L. A. BILL No. 9 OF 1935.

A Bill further to amend the Code of Civil Procedure 1908, for certain purposes.

WHEREAS it is expedient further to amend the Code of Civil Procedure, 1908, for the purposes hereinafter appearing; It is hereby enacted as follows:— V of 1908.

Short title.

1. This Act may be cited as the Code of Civil Procedure (Amendment) Act, 193 .

Addition of proviso to section 51, Act V of 1908.

2. At the end of section 51 of the Code of Civil Procedure, 1908 (hereinafter referred to as the said Code), there shall be added the proviso— V of 1908.

"Provided that execution by detention in prison shall not be ordered unless, after giving the judgment-debtor an opportunity of showing cause why he should not be committed to prison, the Court, for reasons recorded in writing, is satisfied—

(*a*) that the judgment-debtor, with the object or effect of obstructing or delaying the execution of the decree,—

(*i*) is likely to abscond or leave the local limits of the jurisdiction of the Court, or

(*ii*) has, after the institution of the suit in which the decree was passed, transferred, concealed, or removed any part of his property, or committed any other act of bad faith in relation to his property; or

(*b*) that the judgment-debtor has, or has had since the date of the decree, the means to pay the amount of the decree or some substantial part thereof and refuses or neglects or has refused or neglected to pay the same.

Explanation.—In the calculation of the means of the judgment-debtor for the purposes of clause (*b*), there shall be left out of account any property which, by or under any law for the time being in force, is exempt from sale in execution of the decree."

Amendment of rule 37, Order XXI in the First Schedule, Act V of 1908.

3. In sub-rule (*1*) of rule 37 in Order XXI in the First Schedule to the said Code, for the word "may" there shall be substituted the word "shall", and at the end of the sub-rule there shall be added the proviso—

"Provided that such notice shall not be necessary if the Court is satisfied, by affidavit or otherwise, that, with the object or effect of delaying the execution of the decree, the judgment-debtor is likely to abscond or leave the local limits of the jurisdiction of the Court."

Repeal of rule 40, Order XXI in the First Schedule, Act V of 1908, and insertion of new rule in place thereof.

4. Rule 40 in Order XXI in the First Schedule to the said Code together with any alterations therein or additions thereto made under section 122 of the said Code shall be repealed and in place thereof there shall be inserted the rule—

Proceedings on appearance of judgment-debtor in obedience to notice or after arrest.

"40. (*1*) When a judgment-debtor appears before the Court in obedience to a notice issued under rule 37, or is brought before the Court after being arrested in execution of a decree for the payment of money, the Court shall proceed to hear the decree-holder and take all such evidence as may be produced by him in support of his application

for execution, and shall then give the judgment-debtor an opportunity of showing cause why he should not be committed to the civil prison.

(*2*) Pending the conclusion of the inquiry under sub-rule (*1*) the Court may, in its discretion, order the judgment-debtor to be detained in the custody of an officer of the Court or release him on his furnishing security to the satisfaction of the Court for his appearance when required.

(*3*) Upon the conclusion of the inquiry under sub-rule (*1*) the Court may, subject to the provisions of section 51 and to the other provisions of this Code, make an order for the detention of the judgment-debtor in the civil prison and shall in that event cause him to be arrested if he is not already under arrest:

Provided that in order to give the judgment-debtor an opportunity of satisfying the decree, the Court may, before making the order of detention, leave the judgment-debtor in the custody of an officer of the Court for a specified period not exceeding ten days or release him on his furnishing security to the satisfaction of the Court for his appearance at the expiration of the specified period if the decree be not sooner satisfied.

(*4*) A judgment-debtor released under this rule may be re-arrested.

(*5*) When the Court does not make an order of detention under sub-rule (*2*), it shall disallow the application and, if the judgment-debtor is under arrest, direct his release."

STATEMENT OF OBJECTS AND REASONS.

This Bill is the outcome of the recommendations of the Royal Commission on Labour in India to the effect that in the case of industrial workers in receipt of wages less than Rs. 100 a month arrest and imprisonment for debt should be abolished except where the debtor has been proved to be both able and unwilling to pay. The Bill seeks to amend the Civil Procedure Code, 1908, so as to protect honest debtors of all classes, and not of the industrial worker class only, from detention in a civil prison and to confine such detention to debtors proved to be recalcitrant or fraudulent. It provides *inter alia* that no order for execution by detention in prison shall be issued unless the debtor has been given opportunity of showing cause why he should not be committed to prison, and the Court is satisfied for reasons recorded in writing that (*i*) the debtor is likely to leave the local limits of the jurisdiction of the Court, or has after the institution of the suit fraudulently disposed of his property, and (*ii*) that he is able to pay the amount of the decree otherwise than from protected assets.

2. The Bill applies to all judgment-debtors. After consultation with Local Governments the Government of India decided that in this matter there was no sufficient reason for restricting the protection to small debtors.

H. D. CRAIK.

NEW DELHI;

The 26th January, 1935.

MD. RAFI,

Secy. to the Govt. of India.

GOVERNMENT OF INDIA.

Legislative Assembly Department.

The following Bill was introduced in the Legislative Assembly on the 13th February, 1935:—

L. A. BILL NO. 10 OF 1935.

A Bill further to amend the Code of Civil Procedure, 1908, for certain purposes.

WHEREAS it is expedient further to amend the Code of Civil Procedure, 1908, for the purposes hereinafter appearing; It is hereby enacted as follows:— V of 1908.

Short title and commencement.

1. (*1*) This Act may be called the Code of Civil Procedure (Second Amendment) Act, 1935.

(*2*) It shall come into force on such date as the Governor General in Council may, by notification in the Gazette of India, appoint.

Insertion of new section 44A in Act V of 1908.

2. After section 44 of the Code of Civil Procedure, 1908, the following section shall be inserted, namely:— V of 1908.

Execution of decrees passed by Courts in the United Kingdom and other reciprocating territory.

"44A. Where a certified copy of a decree of any of the superior Courts of the United Kingdom or any reciprocating territory has been filed in a District Court, the decree may be executed in British India as if it had been passed by the District Court.

Explanation 1.—'Superior Courts', with reference to the United Kingdom, means the High Court in England, the Court of Session in Scotland, the High Court in Northern Ireland, the Court of Chancery of the County Palatine of Lancaster and the Court of Chancery of the County Palatine of Durham.

Explanation 2.—'Reciprocating territory' means any country or territory which the Governor General in Council may, from time to time, by notification in the Gazette of India, declare to be reciprocating territory for the purposes of this section; and 'superior Courts', with reference to any such territory, means such Courts as may be specified in the said notification.

STATEMENT OF OBJECTS AND REASONS.

On the 27th February, 1924, Government introduced a Bill further to amend the Code of Civil Procedure, 1908, the object of which was to provide for the enforcement in British India of judgments obtained in the United Kingdom and in other notified parts of His Majesty's Dominions, as part of a reciprocal arrangement the other part of which consisted of the extension to British India of the provisions of Part II of the Administration of Justice Act, 1920, under which the judgments of superior Courts in India would become enforceable in the United Kingdom. The Select Committee to which the Bill was referred expressed the opinion that the Bill would not ensure a fair measure of reciprocity. The difficulty arose from the fact that under the British Act reciprocity could only be applied to judgments of "superior Courts" and most of the British Indian Courts of unlimited civil jurisdiction would not have come within the meaning of the term "superior Courts" as used in that Act. No amendment of the Indian Bill could have altered that position, and for this reason it was decided to drop the Bill. The position has now been altered by the passing of the Foreign Judgments

(Reciprocal Enforcement) Act, 1933, which provides for the extension of Part I thereof to His Majesty's Dominions outside the United Kingdom by an Order in Council, and also leaves it to the Order in Council to specify the Courts which shall be deemed as "superior" within the meaning of the Act. The Government of India have ascertained that the Lord Chancellor has no objection to the Act being applied to all Indian Courts possessing unlimited original civil jurisdiction. This removes the obstacle which stood in the way of legislation in 1925, and the present Bill substantially embodies the provisions of the old Bill with some modifications mainly necessitated by the terms of the new English Act.

N. N. SIRCAR.

NEW DELHI;

The 1st February, 1935.

MD. RAFI,

Secy. to the Govt. of India.

Registered No. C207

Appendix to

The Calcutta Gazette

THURSDAY, MARCH 7, 1935.

List of Common and Special Jurors for the year 1935

District 24-Parganas

List of Common Jurors for the year 1935 (European)

It is notified that objections to the following list of Common Jurors for the district of the 24-Parganas for the year 1935 will be heard and determined by the Sessions Judge and Collector of the district at the Sessions Court at 12 noon on the 6th April 1935.

Serial No.	Name.	Thana.	Place of abode—Village, road or street.	Nationality.	Quality or occupation.
	A				
1	Agustin, H	Entally	11-1, Canal Street	Anglo-Indian	Printer, E B Ry Press.
2(S)	Ara, A G	Maniktala	15, Canal East Road	American	Manager, J C Galstaun, Esq.
3(S)	Augier, C S	Chitpur	13, Kali Prasanna Singh Road	Anglo-Indian	Manager, Bengal Hydraulic Press.
4	Allan, A	Jagatdal	Clerk, Anglo-India Upper Mill	European	Clerk, Anglo-India Upper Mill.
	B				
5	Booth, A	Jagatdal	Manager, Jagatdal Mill	European	Manager, Jagatdal Mill.
6(S)	Baker, W H	Watgunge	40, Ekbalpore Road	do	Assistant, Graham & Co, Shipping Department.
7	Barber, H O	Garden Reach	43, Garden Reach Road	do	Head Time-keeper, Garden Reach Workshop.
8	Barrett, T A	Budge-Budge	Budge-Budge	do	Superintendent, Indo-Burmah Petroleum & Co, Ld.
9	Beattie, J	Garden Reach	Fort William Jute Mill	do	Preparing Assistant.

10	Brijmer, G A	..	..	Jagatdal	..	..	Anglo-India Middle Mill	..	do	..	..	Clerk, Anglo-India Middle Mill.
11	Burman, H P	..	..	Bijpore	..	..	Officer's Colony, Kanchrapara	..	do	..	..	District Electrical Engineer.
	C											
12	Champbell, A W	..	..	Jagatdal	..	..	Jagatdal	..	..	European	..	Assistant to the European staff of Alexandra Jute Mill.
13(S)	Cooper, G	..	..	Dum-Dum	..	..	Dum-Dum, 24-Parganas	..	do		..	Manager, Gramophone Co.
14	Corgil, J	..	..	Jagatdal	...	..	Engineer, Anglo-India Lower Mills	do	..		..	Engineer, Anglo-India Lower Mills.
15	Craig, G	..	..	Naihati	..	..	Hukum Chand Jute Mill, Naihati	..	do	..	..	Assistant.
16	Cunningham, W	..	..	Budge-Budge	..	..	Chittragunj	..	..	do	..	Office Master, Chevoit Jute Mills, Chittragunj.
	D											
17(S)	Debi, B	..	..	Entally	..	..	1, Canal Street	..	European		..	Assistant, R S N & Co.

Serial No.	Name.	Thana.	Place of abode—Village, road or street.	Nationality.	Quality or occupation.
	D				
18	Dubern, L	Entally	50, Tangra Road	Anglo-Indian	Proprietor, Crystal Ice & Aerated Water Company.
	E				
19	Elder, P W	Khardah	Khardah Jute Mill	European	Overseer, Khardah Jute Mill.
20(S)	E Little John	Jagatdal	Anglo-India Middle Mill	do	Manager.
	F				
21(S)	Finlay, W	Budge-Budge	Kalipur, P O Achipur	European	Manager, Orient Jute Mills.
22	Fitzpatrick, W B	Jagatdal	Clerk, Anglo-India Lower Mill, I	do	Clerk, Anglo-India Lower Mill, I.
23	Franklin, V E	Baranagore	Marshall Sons & Co.	do	Superintendent, Drawing Office.
24	Francis, R	Entally	41, Ismail Street	Anglo-Indian	Businessman.
25	Freemault, G	Garden Reach	28-4, Garden Reach Road	European	Engineer.
26	Ferguson, Geo M	ditto	43, Garden Reach Road	do	Plaiter, Garden Reach Workshop.
	G				
27(S)	Gahan, E C J	Garden Reach	15, Garden Reach Road	European	Commercial Traffic Manager, B N Ry.
28	Gartner, Van	Beliaghata	Ice Association Factory, 3 Gas Street, Narkeldanga.	Anglo-Indian	Engineer.

29(S)	Gay, H E	Entally	14-1, Convent Road	European	Assistant, Houghton & Sons.
30	Govia, J H	ditto	7, Palmer Bazar Road	Anglo-Indian	Superintendent, Palmer's Bridge, Calcutta Corporation.
31	Grain, R	Bijpore	E B Ry Colony, Bijpore	European or Anglo-Indian.	Inspector, Station Committee, E B Ry, Kanchrapara.
32(S)	G M Martin	Jagatdal	Reliance Jute Mill, Bhatpara	European	Manager.
	H				
33	Hay, D	Titagarh	Standard Jute Mill, Titagarh	European	Mill Mechanic.
34(S)	Henderson, W M	Baranagore	Marshall Sons & Co	do	Works Manager.
35(S)	Hawkins, E K	Garden Reach	11, Garden Reach Road	do	Chief Accountant, Chief Engineer's Office, B N Ry.
	I				
36	Instance, S	Garden Reach	61, Garden Reach Road	European	Carpenter, Garden Reach Workshop.
	J				
37(S)	Jellicoe, J J	Entally	14-1, Convent Road	Anglo-Indian	Engineer.
38	Jaglekar, R B	Garden Reach	72-2, Garden Reach Road	Marhatty	Stenographer, Chemical Traffic Manager's Office, B N Ry.
39	Jones, A D	Kanchrapara	Bijpore Officers' Colony	European	Foreman, E B Ry.

Serial No.	Name.	Thana.	Place of abode—Village, road or street.	Nationality.	Quality or occupation.
	K				
40(S)	Kaddie, P	Titagarh ..	.. Kinnison Jute Mill ..	European ..	Manager and Honorary Magistrate.
41	Keith, D	Khardah ..	.. Titagarh Mill No. II, P O Titagarh	do ..	.. Factory Overseer.
42(S)	Kinnear, A R	Jagatdal ..	.. Jagatdal ..	do ..	.. Assistant Manager, Anglo-Indian Jute Mill No. 4.
	L				
43(S)	Lancaster, S Percy ..	Alipore ..	.. 1, Alipore Road ..	European ..	Secretary, Agricultural and Horticultural Society of India.
44	Lawden, J	Nowpara ..	.. Shamnagore ..	do ..	.. Assistant Manager, Titagarh Jute Mill No. 2.
45(S)	Leslie, J H	Titagarh ..	.. Titagarh Mill No. 1 ..	do ..	.. Honorary Magistrate and Manager, Titagarh Mill No. 1.
46	Low, W H	Khardah ..	.. Khardah ..	do ..	.. Spinning Teacher, Titagarh Mill No. II.
47	Linton, G	Jagatdal ..	.. Manager, Anglo-India Upper Mill	do ..	.. Manager, Anglo-India Upper Mill.
	M				
48	McLaren, D	Beliaghata ..	.. 102, Narkeldanga Main Road ..	European ..	Superintendent, Sura Jute Mill.
49	Macintosh, A	Jagatdal ..	.. Reliance Jute Mill	do ..	.. Weaving Overseer.
50	Mackenzie, J R	Baranagore ..	.. Baranagore South Mill ..	do ..	.. Clerk.
51(S)	,, E F	ditto ..	.. Kamarhati Jute Mill ..	do ..	.. Mill Manager, Honorary Magistrate.
52	,, Osgood Andrew Balwin.	Dum-Dum	.. 21, Mall Dum-Dum ..	do ..	.. Manager, Store Department, Messrs Saxby Farmar & Co, Entally, Calcutta.

53	Mathrew, R M	..	Khardah	..	Titagarh Mill No. 2	..	do	Manager
54	Meade, G A	..	Ballygunge	..	9, Short Street	..	do	ditto.
55(S)	Milne, R	..	Titagarh	..	6, Empire Jute Mill	..	do	ditto.
56	Moore, C S	..	Garden Reach	..	75, Garden Reach Road	..	do	Assistant Traffic Superintendent, B N Ry.
57	Martin, E	..	Entally	..	Wellesley Manson	..	Anglo-Indian	Assistant, E I Ry Audit Office.
58(S)	,, S A C	..	Garden Reach	..	75, Garden Reach Road	..	European	Assistant Auditor, B N Ry.
59(S)	Melvill, A	..	ditto	..	43/1, Garden Reach Road	..	do	Salesmaster of Clive Jute Mill.
60	Moncur, G	..	Jagatdal	..	Reliance Jute Mill	..	do	Batching Overseer.
61	Morison, R	..	Garden Reach		61, Garden Reach Road	..	do	Blacksmith, Garden Reach Workshop.
62	Muleahy, C	..	Entally	..	16A, Canal Street	..	do	Assistant Claim Inspector, E I Ry.

N

63	Niblelt, D B	..	Baranagore	..	Marshall Sons & Co	..	European	Chief Accountant.
64(S)	Nicholson, R	..	Titagarh	..	Kelvin Jute Mill	..	do	Manager.

P

65(S)	Page, J J	..	Budge-Budge	..	Lothian Jute Mill	..	European	Engineer.

Serial No.	Name.	Thana.	Place of abode—Village, road or street.	Nationality.	Quality or occupation.
	P				
66	Paxten, A ..	.. Garden Reach ..	.. 61, Garden Reach Road	.. European	.. Draftsman, Garden Reach Workshop.
67	Paulith, W ..	.. Entally ..	.. 8-4, Canal Street ..	.. Anglo-Indian	.. Electrical Engineer.
	R				
68	Rodricks, J ..	.. Entally ..	.. 6, Canal Street ..	.. Anglo-Indian	.. Publicity Officer, E I Ry.
69	Robertson, J ..	.. Budge-Budge ..	.. Budge-Budge ..	.. European	.. Manager, Albion Jute Mill, Budge-Budge.
70	„ H ..	.. Jagatdal ..	.. Engineer, Jagatdal Mill	.. do ..	.. Engineer, Jagatdal Mill.
71	Rennie, J B ..	.. Garden Reach ..	.. 43, Garden Reach Road	.. do ..	.. Chief Engineer and Manager, Kesoram Cotton Mill.
72	Richardson, William	.. Budge-Budge ..	.. Budge-Budge ..	.. do ..	.. Engineer, Albion Jute Mill.
	S				
73(S)	Sabbage, E H ..	.. Garden Reach ..	.. 75, Garden Reach Road	.. European	.. Chief Clerk, Agent's Office, B N Ry.
74	Scall, W ..	.. ditto ..	.. 43/1, Garden Reach Road	.. do	.. Jute Overseer, Clive Jute Mill.

75(S)	Singleton, T	Cossipore	24, Jheal Road	Anglo-Indian	Engineer, Calcutta Electric Supply Corporation, Limited.
76	Stewart, William	Entally	Kankinara Jute Mills	European	Manager, Kankinara Jute Mills.
77	Sword, J R	Baranagore	Baranagore South Mill	do	Manager.

T

78	Taylor, A	Garden Reach	61, Garden Reach Road	European	Plaiter, Garden Reach Workshop.
79	,, W L	ditto	43, Garden Reach Road	do	Engineer, Garden Reach Workshop.
80	Thoms, A K	Jagatdal	Authpur	do	Manager, Alliance Jute Mill, Jagatdal.

V

81	Vallant, B	Chitpur	Ashcroft Press	European	Engineer.

W

82	Watson, W B	Budge-Budge	Budge-Budge Mills	European	Salesmaster, Budge-Budge and Lothian Jute Mills.
83	Walker, J H	Naihati	Gauripur Works, Naihati	do	Chemist, Gauripur Jute Mill.
84	Waters, G R	Baranagore	Venesta, Ltd, Kamarhati	do	Assistant Engineer.
85(S)	W P Brokless	Jagatdal	Kankinara Paper Mill	do	Manager.

List of Common Jurors for the year 1935 (Indians)

Serial No.	Name.	Thana.	Place of abode—Village, road or street.	Nationality.	Quality or occupation.
	A				
86(S)	Abdul Aziz ..	.. Beliaghata ..	.. 92, Talpukhur Road ..	Muhammadan ..	.. Teacher, Calcutta Corporation Free Primary School.
87(S)	,, Baseque (Dr)	.. Basirhat ..	.. Basirhat ..	do ..	.. Landholder, Member, District Board.
88	,, Gafur ..	.. Baraset ..	.. Kajipara Sangmura ..	do ..	.. Clerk, E B Ry Agent's office, No. 3, Koilaghat Street, Calcutta.
89	,, Gani ..	.. Entally ..	.. 6, Ismail Street ..	do ..	.. Railway servant, c/o Dl. Supdt, Crews, E I Ry, Howrah.
90(S)	,, Gafur Siddique	.. Baduria ..	.. Khashpore ..	do ..	.. Landholder.
91	,, Jabbar ..	.. Baraset ..	.. Kazipara, Dargabati ..	do ..	.. Clerk, E B Ry.
92(S)	,, Satter ..	.. Beliaghata ..	.. 90, Narkeldanga North Road ..	do ..	.. Hide Merchant.
93	,, Rashid ..	.. Manicktala ..	.. 38, Baldeapara Road ..	do ..	.. Clerk, Alambazar Jute Mill, 24-Parganas.
94	Abdus Sattar ..	.. Beniapukur ..	.. 6, Balu Hakkak Lane ..	do ..	.. Merchant.
95(S)	,, Samad ..	.. Beliaghata ..	.. 90, Narikeldanga North Road ..	do ..	.. Employee in the office of the Director of Industries, Bengal, at Free School Street, Calcutta.
96	,, Samad ..	.. Taltola ..	.. 48, Alimuddin Street, Calcutta ..	do ..	.. Free Pass Examiner, Import Department, Custom House, Calcutta.
97	Acharji, Atul Chandra	.. Watgunge ..	.. P-18, Hari Sabha Lane ..	Hindu ..	.. Clerk, Port Commissioners' Office.
98	,, Krishna Chandra	.. Bhowanipore ..	.. 1, Gour Ghosh Road ..	do ..	.. Merchant

99(S)	Addi, Panchanan	..	Mathurapore / Alipore	..	..	Mathurapore Road / 8, Mayarpur Road	..	do	..	.. Landholder and Merchant.
100	Adhikari, Haridas	..	Bhangar	..	..	Bil Kizla, P O Bodra	..	do	..	.. Landholder.
101	„ Promoda Nath	..	Falta	..	..	Vill Dakhin Ala, p-s Falta	..	do	..	.. Clerk, Birla Jute Mill, Shamgung.
102	Addi, Sarat Chandra	..	Alipore	..	..	6-1, Gopalnagar Road	..	do	..	.. Landholder.
103	„ Satish Chandra	..	ditto	..	..	8, Mayarpur Road ..	..	do	..	.. Merchant.
104	Agasti, Sudhir Kumar	..	Bhangar	..	..	Bodra, P O Bodra ..	..	do	..	.. Landlord.
105	Aikat, D N ..	..	Garden Reach	..	..	42, Garden Reach Road	..	Indian	..	.. Assistant Weaving Master, Kesoram Cotton Mill, Garden Reach.
106	Ahmed, Aminuddin	..	Deganga	..	..	Chandpur, P O Hadipur	..	Muhammadan		.. Landholder.
107	„ Abdul Moksed, BA	..	Sarupnagar	..	..	Gobra ..	..	do	..	.. Landholder and Teacher, Hakimpur M E School.
108	„ Afiladdin	..	Baduria	..	..	Keotsha, P O Dakhin Chatra	..	do	..	.. Landholder.
109	„ Aksir	..	Dum-Dum	..	..	Bankra, P O Dum-Dum Cantonment.		do	..	.. President, Bankra Italghata.
110(S)	„ Anisuddin	..	ditto	..	..	Gouripur	..	do	..	.. Vice-Chairman, North Dum-Dum Municipality.
111	„ Hafizuddin	..	Bhangar	..	..	Vill Nanglah, P O Bhangar	..	do	..	.. President, Bhogali U B, and Clerk, Registrar's office, Calcutta.
112	„ Jasimuddin	..	Magrahat	..	..	Ramchandrapur, P O Rangilabad		do	..	.. Landholder.
113	„ Kutubuddin	..	Amherst Street		..	68, Mechuabazar Street, Calcutta ..		do	..	.. Building Contractor.
114	„ Masiuddin	..	Dum-Dum	..	..	Vill Gouripore, P O Dum-Dum ..		do	..	.. Landholder and Clerk in the office of Garrison Engineer, Ishapore.
115(S)	„ Makbul, BA	..	Beliaghata	..	..	235B, Manicktala Main Road	..	do	..	.. Head Master, Corporation Free Primary School.
116	„ Etazuddin	..	ditto	..	..	84, Narikeldanga North Road	..	do	..	.. Businessman.
117	„ Nesar ..	..	Manicktala	..	..	12-6-1, Muraripuker Lane	..	do	..	.. Teacher, Jubilee Institute.
118	„ Nasiruddin	..	Bhangar	..	..	Vill Shampukur, P O Bhangar	..	do	..	.. President, Shampukur U B, and medical practitioner.

Serial No.	Name.	Thana.	Place of abode—Village, road or street.	Nationality.	Quality or occupation.
	A				
119	Ahmed, Shamsuddin	Titagarh	Naupara Road	Muhammadan	Retired Sub-Inspector of Police.
120	„ Ramjan	Basirhat	Neora	do	Merchant and Landholder.
121(S)	„ Samiruddin	Entally	24, Ismail Street	do	Teacher, Calcutta Madrassa.
122	„ T	Ballygunge	15/A, Chakraberia Road North	do	Landlord.
123(S)	„ T, Khan Bahadur	ditto	45, Shamsul Huda Road	do	Government servant.
124	„ Taslimuddin	Amdanga	Khangachi	do	President, Bodai Union Board, and Landholder.
125	Ali Md Esahaque	Hasnabad	Kalootola	do	Naib of Zeminder and Landholder.
126(S)	„ Golam Akbar, Maulvi	Barrackpore	Government High School, Barrackpore.	do	Head Maulvi.
127	„ Waris	Entally	23, Middle Road	do	Landholder.
128	Answari, Mohammad Hossain	Chitpur	45-H-2, Rani Road, Chitpur	do	Teacher.
129	„ „ Sikendar Ali	Hasnabad	Hasnabad	do	Landholder.
130	Ash, Bibhakar	Habra	Haidadpur	Hindu	Zemindar.
	B				
131	Bagchi, Satish Chandra	Cossipore	33-B, Ratan Babu Road	Hindu	Clerk, Mackinnon, Mackenzie's office.
132(S)	„ Rai Debendra Prosad Bahadur.	Ballygunge	6, Rechi Road	do	Honorary Magistrate.
133	Bagui, Ashutosh	Rajarhat	Beguiati, P O Dum-Dum	do	President, Mahisbathan Union Board, and Landholder.

134	Baidya, Nurul Ahmed	..	Kulpi	..	..	Sreenagar, P O Kulpi	..	..	Muhammadan	.. Landholder.
135	,, Alimuddy	..	Baruipur	..	..	Olberia		..	do ..	.. Service-holder.
136	Baksh, Elahi	..	Beliaghata	..	..	1-3, Raja Dinendra Street		..	do ..	.. Hide Merchant.
137	Bakshi, Hirendra Nath	..	Sarupnagore		..	Bithari ..		...	Hindu ..	.. Landholder.
138	Bangal, Rama Nath	..	Amdanga	..	..	Bodai, P O Amdanga	..	..	do ..	.. Trader and Landholder.
139 (S)	Ballav, Gobinda Das	..	Beliaghata	..	..	157, Beliaghata Main Road		..	do ..	.. Clerk, Ralli Brothers.
140(S)	,, Harendra Nath	..	Basirhat	..		Dhanyakuria ..		..	do ..	.. Zemindar.
141	,, Tarak Chandra	..	Habra	..	..	Biraballavpara ..		..	do ..	.. Asstt of the office of the Controller of Inspection, Indian Stores Department, Calcutta.
142	Banerji, Ajit Kumar	..	Baruipur	..	..	Sashon, P O Baruipur	..	..	do ..	.. Zemindar.
143	,, Anukul Chandra	..	Maheshtala	..	..	Raipur		..	do ..	.. Clerk.
144	,, Anurup Chandra	..	Khardah	..	..	Khardah		..	do ..	.. Retired Government servant.
145	,, Ashutosh	..	Budge-Budge	..	..	Pujali, P O Achipore	..	..	do ..	.. Landholder.
146(S)	,, Bankim Chandra	..	Watgunge	..	..	21, Ramkamal Mukherji Street		..	do ..	.. Clerk, Mackinnon, Mackenzie & Co.
147	,, Behari Lal	..	Joynagore	..	..	Joynagore, Banerjeepara, Joynagore P O			do ..	.. Landholder.
148(S)	,, Beni Madhab	..	Bhowanipore	..	..	24, Sankaripara Road	..	..	do ..	.. Contractor.

Serial No.	Name.	Thana.	Place of abode—Village, road or street.	Nationality.	Quality or occupation.
	B				
149	Banerji, Bibhutibhusan	Dum-Dum	493, Sadar Bazar Road	Hindu	Naib, Panihati Wards Estate.
150(S)	„ Bhaba Sankar	Barrackpore	Manirampur, P O Barrackpore	do	Manager, "*The Bengalee.*"
151	„ Bhabani Prosad	Khardah	Khardah	do	Head Clerk, Khardah Jute Mill.
152	„ Bibhuti Bhusan	Baruipur	Sashon, P O Baruipur	do	Landholder.
153	„ Bijay Kumar	Kulpi	Lakhikantapore, P O Ghateshwara	do	ditto.
154	„ Bimalendu	Maheshtala	Raipur	do	Clerk, Planters' Stores and Agency, Clive Street, Calcutta.
155	„ Bipin Behari	Tollygunge	128-1, Monoharpukur Road	do	ditto.
156(S)	„ Bipin Behari	Beliaghata	14-1, Ram Mohan Roy Road	do	Clerk.
157(S)	„ Brajendra Kumar	Watgunge	78, Diamond Harbour Road	do	Cloth Merchant.
158(S)	„ Bhupendra Nath	Baduria	10-B, Jager Nath Sircar Lane	do	Clerk, B N R.
159	„ Dhirendra Nath	Budge Budge	Sarengabad	do	Clerk, Standard Oil Co., Budge Budge.
160	„ Chandra Nath	Maheshtala	Maheshtala	do	Pension-holder.
161	„ Dhirendra Nath	Bhowanipore	38, Chandra Chatterjee Street	do	Electrical Engineer.

162	„	Dwijendra Nath	..	Baranagore	..	..	Mayradanga	..	..	do	..	.. Clerk.
163	„	Girindra Nath	..	Naihati	..	..	Banerjeepara Road, Naihati	..		do	..	.. Clerk, Planters' Stores and Agency, Calcutta.
164	„	Girindra Nath	..	Maheshtala	..	..	Mohadebnagore, P O Moheshtola			do	..	.. Clerk, E I Railway, Audit Office, Fairlie Place, Calcutta.
165	„	Gobinda Chandra	..	Beliaghata	..	..	90-2, Garpar Road	..		do	..	.. Head Clerk, New Zealand Insurance Co, Ltd.
166	„	Hari Pada	..	ditto	..	..	58, Peary Mohan Sur Garden Lane			do	..	.. Retired Commercial Accountant, E I Railway.
167	„	Hari Bhusan	..	Jagatdal	..	..	Bhatpara ..	..	..	do	..	.. Assistant, Surgeon-General's Office, Calcutta.
168	„	Hemanta Kumar	..	Baranagore	..	..	Alambazar, Waldie St	..		do	..	.. Landholder.
169	„	Hrishikesh	..	Budge Budge	..	..	Paikpara ..	..	..	do	..	.. Clerk, B & O Co's Office, Calcutta.
170	„	Indubhusan	..	Beliaghata	..	..	54, Sura 1st Lane	..	..	do	..	.. Teacher, George High School, Narkeldanga.
171	„	Jadu Gopal	..	Behala	..	..	Bonomali Naskar Road	..		do	..	.. Money-lender.
172 (S)	„	Jadu Nath	..	Baruipur	..	..	Garia, P O South Garia	..		do	..	.. Zemindar and President Panchayet.
173 (S)	„	Jogendra Nath, Rai Sahib.		Naihati	..	..	Banerjeepara, Naihati ..	..	..	do	..	.. Government Pensioner.
174	„	Jotindra Nath	..	Maheshtala	..	..	Maheshtala	..	..	do	..	.. Graduate, Zemindar and Drug Shop Owner.
175	„	Jotindra Nath	..	Joynagar	..	..	Durgapur	..	..	do	..	.. Merchant.

66, Hriday Ram Banerjee's Lane,
Calcutta.

Serial No.		Name.	Thana.	Place of abode—Village, road or street.	Nationality.	Quality or occupation.
		B				
176 (S)	Banerji,	Kaliprosad ..	Khardah ..	.. Khardah	Hindu ..	.. Professor, Bangabasi College.
177	,,	Kedareswar ..	Sagar ..	.. Vill—Dhoblat ..	do ..	.. Naib and President Panchayat.
178	,,	Khetra Das, BA ..	Behala ..	.. Bishnupur, P O Bishnupur, K F Railway.	do ..	.. Senior Master, Siksha Sangha School, Bishnupur P O.
179	,,	Khirode Krishna ..	Baduria ..	.. Ghosepur	do ..	.. Landholder.
180	,,	Kiron Chandra ..	Khardah ..	.. Rohra	do ..	.. Clerk.
181	,,	Kishori Mohan ..	Bhawanipore ..	.. 9A, Rakhal Mukherjee Road ..	do ..	.. Artist.
182	,,	Kripa Chandra ..	Baruipur ..	.. Kalyanpur, P O Baruipur ..	do ..	.. Zemindar.
183	,,	Kristo Mohan, BSc ..	Entally ..	.. 26, Sambhu Babu Lane ..	do ..	.. Chemist, Smith Stanistreet & Co.
184	,,	Lalit Mohan ..	Maheshtala ..	.. Maheshtala	do ..	.. Zemindar.
185	,,	Madan Mohan ..	Naihati ..	.. Mitrapara Road, 24-Parganas ..	do ..	.. Assistant Pay Clerk, E B Railway.
186	,,	Mahim Chandra ..	Maheshtala ..	.. Raipur, P O Maheshtala ..	do ..	.. Clerk, E B Railway, Sealdah.
187	,,	Mahim Chandra ..	Titagarh ..	.. A P Debi's Road, Titagarh ..	do ..	.. Overseer, Titagarh Municipality.
188	,,	Mohit Kumar ..	Baruipur ..	.. Vill Sasan, P O Baruipur, 24-Parganas.	do ..	.. Businessman.
189 (S)	,,	Monomohan ..	Harowa ..	.. Minakhan Kutchari ..	do ..	.. Superintendent, Port Canning Co.

190	„	Nagendra Nath	..	Baruipur	..	..	Sashon, P O Baruipur	..	do	.. Landholder.
191	„	Nagendra Nath	..	Maheshtala	..	..	Maheshtala	..	do	.. Clerk, Messrs Garden Reach Workshops, 43-46, Garden Reach Road, Calcutta.
192	„	Nalini Mohan	..	Tollygunge	..	..	Plot No. 176, Jotin Das Road	..	do	.. Proprietor, Gazipur Perfumery Works.
193	„	Nani Gopal	..	Baranagore	..	..	Belghoria	..	do	.. Assistant to the Controller, Patent and Design.
194 (S)	„	Narayan Das	..	Beliaghata	..	..	14, Biswas Nursery Lane	..	do	.. Engineer and Contractor.
195 (S)	„	Narendra Nath	..	Watgunj	..	..	10-C, Jager Nath Sircar Lane	..	do	.. Clerk, Govt Dockyard.
196	„	Narendra Nath	..	Chitpore	..	..	23B, Kalachand Patitandi Lane	..	do	.. Clerk, Rates and Development Office, E I Railway, Calcutta, 105, Clive Street, Landowner.
197	„	Nirmal Chandra	..	Maheshtala	..	..	Raipur, P O Maheshtala	..	do	.. Zamindar.
198	„	Parbati Charan, BA	..	Behala	..	..	Barisa	..	do	.. Teacher, Barisa Oxford Mission School.
199	„	Phani Bhusan	..	Maheshtala	..	..	Maheshtala ..	..	do	.. Clerk, Messrs Worthington Simpson, Ltd, 10, Clive Street, Calcutta.
200	„	Phanindra Nath	..	Naihati	..	..	Naihati ..	..	do	.. Clerk, Devenport Co.
201	„	Profulla Kumar	..	Tollygunge	..	..	135, Russa Road, South	..	do	.. Clerk, Accountant-General, Bengal's Office.
202	„	Pramatha Nath	..	Maheshtala	..	..	Maheshtala ..	..	do	.. Clerk, B N Railway Audit Office, Garden Reach.
203(S)	„	Promotho Nath	..	Sarupnagar	..	..	Charghat, P O Gobordanga	..	do	.. Zemindar.
204	„	Prosad Das	..	Bhowanipur	..	..	38, Mahim Haldar Street	..	do	.. Landlord.

Serial No.	Name.	Thana.	Place of abode—Village, road or street.	Nationality.	Quality or occupation.
	B				
205 (S)	Banerji, Prosad Chandra ..	Ballygunge ..	.. 26, Ritchie Road	Hindu ..	.. Merchant.
206	,, Probhash Chandra ..	Hasnabad ..	.. Rajepur, P O Hasnabad ..	do ..	.. Landholder.
207	,, Provas Chandra ..	Maheshtala ..	.. Maheshtala	do ..	.. Zemindar.
208	,, Ramendra Nath ..	Cossipur ..	.. 31, Ratan Babu Road ..	do ..	.. Matric, Landlord.
209	,, Rasik Lal ..	ditto ..	.. 4, Satchasipara Road ..	do ..	.. Landlord.
210(S)	,, Rasamay ..	Bhowanipore ..	.. 7-1, Chakrabere Road, South ..	do ..	.. Head Pandit, South Suburban School.
211	,, Rames Chandra ..	Habra ..	.. Vill and P O Gobordanga ..	do ..	.. Zemindar.
212	,, Ratish Chandra, BA ..	Khardah ..	.. Sodepur	do ..	.. Businessman.
213	,, Sachindra Nath ..	Maheshtala ..	.. Maheshtala P O	do ..	.. Teacher, Maheshtala H E School.
214	,, Sachindra Nath ..	Entally ..	.. 102, Chingrighata Road ..	do ..	.. Establishment Clerk, E B Railway, Sealdah.
215	,, Sarat Chandra ..	Behala ..	.. Rai Bahadur Road	do ..	.. Clerk, Statistical Department, B N Railway Office, Garden Reach.
216	,, Sashanka Shekhar ..	Basirhat ..	.. Champapukur	do ..	.. President, Champapukur Union Board.
217	,, Satyendra Nath ..	Dum-Dum ..	.. Kadihati, P O Dum-Dum ..	do ..	.. Landholder.
218(S)	,, Satyendra Nath ..	Manicktala ..	.. 4, Nilambar Mukherji Street ..	do ..	.. Secretary, National Insurance Company.
219(S)	,, Satya Das ..	Beliaghata ..	.. 17, Garpar Road	do ..	.. Landholder.

220(S)	„	Satish Chandra	..	Baruipur	..	..	Kalyanpur, P O Baruipur	..	do	..	.. Zemindar, Honorary Magistrate and President Panchayat.
221(S)	„	Satish Chandra	..	Khardah	..	..	Shibmandirpara	..	do	..	.. Retired Sub-Registrar.
222	„	Shyamapada	..	Titagarh	..	..	Charnock ..	..	do	..	.. Tradesman.
223(S)	„	Siddheswar	..	Jagatdal	..	..	Narayanpur P O	..	do	..	.. Treasurer, Bhatpara Municipality.
224	„	Siva Bhusan	..	Khardah	..	..	Khardah ..	..	do	..	.. Assistant Head Master, Sodepur H E School.
225	„	Siva Das	..	Baruipur	..	..	Sason, P O Baruipur	..	do	..	.. Zemindar.
226(S)	„	Srikumar	..	Tollygunge	..	..	57, Janala Road	..	do	..	.. Educationist.
227	„	Sukumar	..	ditto	..	..	13, Gopal Banerji Lane	..	do	..	.. Water Inspector, Calcutta Municipality.
228	„	Sunit Kumar	..	Khardah	..	..	Ghola	..	do	..	.. Test Auditor, S S Ry.
229	„	Sudhansu Sekhar	..	Basirhat	..	..	Champapukur, P O Hadipur	..	do	..	.. Landholder.
230(S)	„	Surendra Chandra, MA		Beliaghata	..	..	30, Sastitala Road	..	do	..	.. Professor, Presidency College.
231(S)	„	Surendra Nath, MA	..	Entally	..	..	2, Uriapara Lane	..	do	..	.. Professor, Ripon College.
232(S)	„	Tulshi Das	..	Bhowanipore	..	..	2, Russa Road	..	do	..	.. Merchant and landholder.
233	„	Umesh Chandra	..	Baruipur	..	..	Padmapukur, P O Baruipur	..	do	..	.. Auditor, Ry Mackliyod & Co.
234	Bapuli, Lalit Mohan		..	Mathurapur	..	..	Ramnagar, P O Mathurapur	..	do	..	.. Merchant and landholder.
235	„	Sarat Sashi	..	ditto	..	..	ditto	..	do	..	.. ditto.
236	Basu, Ajit Kumar		..	Ballyganj	..	..	2, Marlin Park	..	do	..	.. Businessman.

Serial No.	Name.	Thana.	Place of abode—Village, road or street.	Nationality.	Quality or occupation.
	B				
237	Basu, Anadi Mohan ..	Beliaghata ..	.. 20, Sir Guru Das Road ..	Hindu ..	.. Clerk.
238(S)	„ Anil Chandra ..	Alipore ..	.. 3-B, Jainuddin Mistry Lane and 50, Mohim Halder Street, Kalighat High School, Thana Bhowanipur.	do ..	.. Teacher.
239	„ Ashutosh	Tollygunge ..	.. P214/1A, Mudiali Road ..	do ..	.. ....
240	„ Bhupendra Nath ..	Cossipore ..	.. 36/1, Barrackpur Trunk Road ..	do ..	.. Manager, Estate of Probodh Ch Mitter, Cossipore.
241	„ Bibhuti Bhusan ..	Baruipur ..	.. Baruipur	do ..	.. 2nd Master, Baruipur H E School.
242	„ Bijali Bhusan ..	Tollygunge ..	.. P410, Russa Road	do ..	.. Clerk, E B Railway Audit Office.
243(S)	„ Bijoy Bihari, BA ..	Magrahat ..	.. Dhamua	do ..	.. Teacher, Hadorai H E School, Baruipore.
244	„ Binay Krishna ..	Habra ..	.. Gobordanga-Gaipur / 60, Mechuabazar Street, Calcutta	do ..	.. Coach Builder.
245	„ Birendra Nath ..	Deganga ..	.. Village Jamalpore	do ..	.. Landholder.
246(S)	„ Braja Nath ..	Beliaghata ..	.. 12, Sitalatala Lane	do ..	.. ....
247	„ Brajendra Kumar ..	Sonarpur ..	.. Harinavi	do ..	.. Landholder.
248(S)	„ Chuni Lal	Magrahat ..	.. Gokarni	do ..	.. Clerk, Messrs Bird & Co, Calcutta.
249(S)	„ Dhirendra Nath ..	Chitpur ..	.. 72, Barrackpore Trunk Road ..	do ..	.. Zemindar.
250	„ Dhirendra Nath ..	Hasnabad	.. Saidpur	do ..	.. Talukdar.

251	„	Dhirendra Nath	..	Beliaghata	..	..	28A, Rakhal Ghose Lane	..	do	.. Landholder.
252	„	Dwarikanath	..	Chitpur	..	..	6, Dwarka Nath Bose Lane	..	do	.. Supervisor, Cossipore-Chitpur Municipality.
253	„	Gosta Bihari	..	Entally	..	..	8, Ananda Palit Road ..	..	do	.. Landholder.
254	„	Harendra Krishna	..	Manicktala	..	..	15, Muraripukur Road	..	do	.. Timber Merchant.
255	„	Harendra Nath	..	Nawpara	..	..	Garulia	..	do	.. Clerk, Gillanders, Arbuthnot & Co, Calcutta.
256	„	Hari Charan	..	Beliaghata	..	..	11, Charakdanga Road	..	do	.. Timber Merchant.
257(S)	„	Jatindra Mohan	..	Baduria	..	..	Baduria	..	do	.. Honorary Magistrate.
258	„	Jatindra Nath	..	Sonarpur	..	..	Kodalia	..	do	.. Landholder.
259	„	Jatindra Nath	..	Cossipore	..	..	2, Seal's Garden Lane	..	do	.. Landlord and Clerk in the Imperial Bank.
260	„	Jatindra Nath	..	Baduria	..	..	Arbelia	..	do	.. Zemindar.
261	„	Jitendra Nath	..	Deganga	..	..	Jamalpur, P O Hadipur	..	do	.. Landholder.
262	„	Jogendra Nath	..	Beliaghata	..	..	57, Rakhal Ghosh Lane	..	do	.. Clerk.
263(S)	„	Jogesh Chandra	..	Sonarpur	..	..	Rajpur	..	do	.. Chief Clerk, E B Ry, D T S Office, Calcutta District, Sealdah.
264	„	Jyotish Chandra	..	Canning Town	..	..	Canning Town ..	..	do	.. Inspector, Port Canning and Land Improvement Co.
265	„	Jyotish Chandra	..	Diamond Harbour		..	Vill Sarisa ..	..	do (Kaista)	.. Landholder.
26(6S)	„	Jyotish Chandra, MA	..	Bhowanipore..		..	7, Kundu Road	..	do	.. Assistant Cashier, Central Bank.

Serial No.	Name.	Thana.	Place of abode—Village, road or street.	Nationality.	Quality or occupation.
	B				
267(S)	Basu, Jyotish Chandra	Diamond Harbour	Kamarpol, P O Sarisha	Hindu	Landholder.
268	„ Kamal Krishna	Rajarhat	Bistupur, village Rajarhat, Bistupur P O	do	Clerk, E B Ry, Kailaghat, Calcutta.
269(S)	„ Karali Charan	Watgunge	16B, Circular Garden Reach Road	do	Clerk, Chief Engineer's Office, B N Ry.
270	„ Kumud Behari	Hasnabad	Taki	do	Landholder.
271(S)	„ Kumud Ranjan, BA	Alipore	6-B, Gobinda Addy Road	do	Landholder and Merchant.
272	„ Lalit Mohan	Baraset	Jagulia	do	*Statesman* Office, Calcutta.
273	„ Lalit Kumar	Basirhat	Basirhat	do	Landholder.
274(S)	„ Mahit Mohon	Ballygunj	2, Marlin Park	do	Businessman.
275	„ Manindranath	Beliaghata	22, Jagannath Datta Lane	do	Clerk in a merchant's office.
276	„ Manindranath	Watgunge	24, Michael Datta Street	do	Service-holder.
277	„ Manmohan	Deganga	Jamalpur, P O Hadipur	do	Landholder.
278	„ Manmatha Nath	Basirhat	Basirhat	do	Merchant.
279	„ Manmatha Nath	Bhowanipore	19, Rupchand Mukherjee Lane	do	Building Contractor.
280	„ Bankim Chandra	Magrahat	Dhemua, P O Multi	do	Service-holder.

281	„	Nani Lal	..	Cossipore	..	..	1, Shantrapara Lane ..	..	do ..	.. Government servant.
282	„	Nagendra Nath	..	Bhangar .		..	Vill Kharamba, P O Bhangar	..	do ..	.. Member, Bhojerhat U B, and medical practitioner.
283	„	Nani Gopal	..	Magrahat	..	..	Usti / 10-7, Canal East Road	..	do ..	.. Merchant.
284	„	Narendra Nath	..	Basirhat	..	..	Basirhat	..	do ..	.. Retired Saristadar.
285	„	Jadabananda	..	Budge-Budge	..	..	Shampur, P O Budge-Budge	..	do ..	.. Service-holder.
286	„	Pasupati	..	Beliaghata	..	..	16, Joynarayan T P Lane	..	do ..	.. Manager, M L Shaw & Co.
287(S)	„	Rabindra Nath	..	ditto	..	..	54, Talpukur Road ..	..	do ..	.. Translator, High Court.
288	„	Rajani Kumar	..	Bhowanipore	..	..	6, Chandra Nath Chatterji Street	..	do ..	.. Merchant and landholder.
289	„	Rajendra Nath	..	Baraset	..	..	Chotojagulia ..	..	do ..	.. Landholder.
290	„	Rash Behari	..	Magrahat	..	..	Hansuri, P O Rangilabad	..	do ..	.. Service-holder.
291(S)	„	Sadhan Kumar	..	Diamond Harbour		..	Kalagachia, P O Sarisa	..	do ..	.. Zemindar.
292	„	Sadhan Chandra	..	Budge-Budge	..	..	Sarangabad, P O Budge-Budge	..	do ..	.. Landholder and service-holder.
293(S)	„	Santosh Kumar	..	Chitpur	..	..	2, Paikpara Road ..	..	do ..	.. Landholder.
294(S)	„	Sarat Chandra	..	Baduria / Beniapukur	..	..	Punra / 27, Linton Street, Calcutta	..	do ..	.. Zemindar.
295(S)	„	Sarat Kumar, MSC	..	Jagaddal	..	..	Bhatpara	..	do ..	.. Degree-holder.
296	„	Sachindra Kumar	..	Sonarpur	..	..	Harinavi	..	do ..	.. Landholder.

Serial No.	Name.	Thana.	Place of abode—Village, road or street.	Nationality.	Quality or occupation.
	B				
297(S)	Basu, Shama Charan	Alipore	17-1, Gopalnagar Road	Hindu	Survey Head Clerk.
298	„ Subodh Krishna	Tollygunge	P-395, Russa Road, South	do	Life Insurance Agent.
299	„ Sudhir Chandra	ditto	P 258/6/B, Russa Road	do	Overseer, Building Department, Calcutta Corporation.
300	„ Sudhir Kumar	Alipore	1, Mayerpore Lane	do	Zemindar.
301	„ Satis Chandra	Joynagar	Gocharan	do	Service-holder.
302(S)	„ Subodh Chandra	Magrahat	Gokarni, P O Multi	do	Clerk, merchant's office.
303(S)	„ Surendra Nath, BA	Diamond Harbour	Kalagachia, P O Sarisa	do	Teacher, H E School, Sarisa.
304	„ Surendra	Magrahat	Benipur, P O Magrahat	do	Landholder.
305	„ Sourindra Nath	ditto	Benipur	do	ditto.
306	„ Sita Nath	Beliaghata	16, Sura East Road	do	Head Clerk, R S N Company.
307(S)	„ Surendra Nath, BA	Budge-Budge	Sarangabad	do	Teacher, H E School, Sarangabad.
308(S)	„ Tarunchandra, BA	Shampukur	Tala N Suburban School, 1/2, Marhatta Ditch Lane	do	Head Master, Tala N Suburban School.
309	„ Upendra Nath	Sonarpore	Kamerabad	do	Clerk, Turner, Morrison & Co.
310	„ Ushapati	Hasnabad	Taki, P O Taki	do	Sanitary Inspector, Baduria Circle.

311(S)	„ Trailakshya Nath, BA	Khardah	Panihati	do	Officer-in-charge, Bengal Chemical and Pharmaceutical Works.
312	Batabyal, Basanta Kumar	Kulpi	Kamarchack	do	Landholder.
313	Begg, Johu	Garden Reach	Nahabatkhana, Garden Reach Road	Muhammadan	Independent gentleman.
314	Bera, Janaki Nath	Bhowanipore	6, Mallik Lane	Hindu	Clerk, Calcutta University.
315	Bhaduri, Santosh Kumar	Beliaghata	51B, Garpar Road	do	Rice merchant.
316(S)	„ Upendra Nath	Cossipore	140, South Sinthi Road	do	Laboratory Assistant, Botany, Presidency College.
317	Bhattacharji, Abinash Chandra	Amdanga	Village Rangpur and P O Neelgunge	do	Landholder.
318	„ Amar Nath	Baruipore	Baruipore Vill and P O	do	Trader.
319	„ Amareswar	Tollygunge	30, Nakuleswar Bhattacharji Lane	do	Clerk, Calcutta Corporation.
320	„ Amrita Lal *alias* Santoo	Naihati	Mitrapara Road, Naihati	do	Clerk, Chief Auditor's Office, E B Ry, Goods Section, Traffic Audit Department, Sealdah.
321	„ Anadi Bhushan, BA	Baduria	Punra	do	Assistant teacher, Punra H E School.
322	„ Anukul	Habra	Khatura, at present 5, Shyampukur Street, Shambazar, Calcutta.	do	Ghee and sugar merchant.
323	„ Baidya Nath	Alipore	7-1, Gopalnagar Road	do	Astrologer.
324	„ Banamali	Sonarpore	Boral	do	Landholder.

Serial No.		Name.	Thana.	Place of abode—Village, road or street.	Nationality.	Quality or occupation.
		B				
325(S)	Bhattacharji,	Bhudhar Chandra, MA	Barrackpore ..	.. Manirampur ..	Hindu ..	.. Teacher, Ripon Collegiate School.
326	,,	Bhupati Chandra	Rajarhat ..	.. Atghara, Rajarhat, Bistupur P O ..	do. ..	.. Landholder.
327	,,	Bipin Bihari ..	Sonarpore ..	.. Rajpur ..	do ..	.. Teacher, Rajpur M E School.
328	,,	Dhirendra Nath	Bijpur ..	.. Thakurpara, Halisahar.. ..	do ..	.. Clerk, Accountant-General, Bengal's Office.
329(S)	,,	Dwijendra Nath	Baraset ..	.. Koyra ..	do ..	.. Landholder.
330	,,	Haribhusan, BSc	Baranagar ..	.. Victoria H E School ..	do ..	.. Teacher.
331	,,	Harihar ..	Jagatdal ..	.. Bhatpara ..	do ..	.. Clerk.
332	,,	Hari Pada ..	Alipore ..	.. 72, Joynuddi Mistry Lane ..	do ..	.. Private service-holder.
333	,,	Jagatbandhu	Bhowanipore ..	. 90-C, Ashutosh Mukherjee Road ..	do ..	.. Businessman.
334	,,	Jogesh Chandra	Baraset ..	.. Village Babubagan, P O Dum-Dum Cantonment.	do ..	.. Landholder.
335(S)	,,	Jogendra Nath, BA	Sonarpore ..	.. Rajpur ..	do ..	.. ....

336(S)	„	Jnanendra Nath, MA	Entally	..	..	29-2, Pottery Road	..	do	..	.. Teacher, Ripon Collegiate School.
337(S)	„	Kalitosh, MA	Naihati	..	..	Naihati	..	do	..	.. Landholder.
338(S)	„	Kamal Krishna, MA	Baruipur	..	..	Begumpore, P O South Garia	..	do	..	.. Head Master, Kalikapur H E School, P O South Garia.
339	„	Kartik Chandra	Naihati	..	..	Kantalpara	..	do	..	.. Municipal Commissioner.
340	„	Kartick Chandra	Budge-Budge	..	..	Pyster Road	..	do	..	.. Store-keeper, A P & Co's Depôt, Budge-Budge.
341	„	Krishna Kumar	Jagatdal	..	..	Bhatpara	..	do	..	.. Teacher, Naihati Mahendra School.
342	„	Kishori Mohan, BA	Sonarpore	..	..	Rajpur	..	do	..	.. Timber merchant.
343	„	Kunja Behari ..	Shampukur	..	..	North Suburban School, Tala, 1-2, Marhatta Ditch Lane	..	do	..	.. Senior Teacher, North Suburban School, Tala.
344	„	Lalit Mohan ..	Sonarpore	..	..	Rajpur	..	do	..	.. Clerk, Accountant-General, Bengal's Office.
345	„	Lalit Mohan ..	ditto	..	..	Boral	..	do	..	.. Clerk, Messrs Martin & Co.
346	„	Manmathanath	Habra	..	..	Gobardanga	..	do	..	.. School Master, Gobardanga.
347(S)	„	Monju Gopal, MA	Naihati	..	..	Naihati	..	do	..	.. Professor, c-o Principal, Hooghly College.
348	„	Nalendra Nath, BA	Sonarpore	..	..	Kodalia	..	do	..	.. Clerk, Accountant-General, Bengal's Office.
349(S)	„	Nani Gopal ..	Diamond Harbour	..	..	Bardrone, P O Hatugunge	..	do	..	.. Landholder.
350(S)	„	Narendra Nath	Habra	..	..	Nawpara	..	do	..	.. Clerk, Calcutta Corporation.
351	„	Nikunja Bihari	Sonarpore	..	..	Rajpur	..	do	..	.. Clerk, Accountant-General, Bengal's Office. (Exempted from serving as a Juror during the period from October to March.)

Serial No.	Name.	Thana.	Place of abode—Village, road or street.	Nationality.	Quality or occupation.
	B				
352	Bhattacharji, Panchanan ..	Jagatdal ..	.. Bhatpara	Hindu ..	.. Teacher, Bhatpara High English School.
353	„ Panchanund ..	ditto ..	.. ditto	do ..	.. Superintendent, Bhatpara School.
354	„ Paritosh ..	Naihati ..	.. Naihati	do ..	.. Contractor.
355(S)	„ Rajendra Kumar, MA	Diamond Harbour	.. Diamond Harbour	do ..	.. Assistant Teacher, Diamond Harbour H E School.
356	„ Ram Nath	Sonarpore ..	.. Srirampore	do ..	.. Landholder.
357	„ Sashi Bhushan	Tolligunge (B P)	.. Baistamghata	do ..	.. Clerk.
358	„ Sashanka Shekhar	Bijpur ..	.. E B Ry Colony, Bijpur ..	do ..	.. Assistant Superintendent, Dy Auditor's Office, E B Ry, Kanchrapara.
359(S)	„ Satish Chandra	Basirhat ..	.. Dhalchita	do ..	.. School Master, Basirhat.
360(S)	„ Shama Charan, Rai Bahadur	Naihati ..	.. Kantalpara	do ..	.. Vice-Chairman, Bhatpara Municipality.
361(S)	„ Siddheswar, BA	Baranagar ..	.. Areadah	do ..	.. Assistant Head Master.
362	„ Sita Nath	Baruipore ..	.. Dehimadanmalla	do ..	.. President, Union Board, and Clerk B N Ry, Garden Reach, Calcutta.
363(S)	„ Srikrishna Prasanna, BA, Kabyatirtha.	Haroa ..	.. Khalisadi .. 10, Jadu Bhattacharji Lane, Kalighat.	do ..	.. Assistant Head Master, Hindu School, Calcutta.
364(S)	„ Sudhir Nath, BA	Barrackpore ..	.. Manirampur, Barrackpore P O ..	do ..	.. School Master, Ripon Collegiate School.

365(S)	,,	Surendra Nath, B Sc.	Jagatdal	..	..	Bhatpara	..	..	do	..	..	Employee, Corporation of Calcutta, Assessment Department.
366	,,	Taragati ..	Bhowanipore	..	..	38, Bakulbagan Road	..	..	do	..	..	Landholder.
367(S)	,,	Upendra Nath ..	Behala	..	..	Behala Gossaipara	..	..	do	..	..	Deputy Chief Accountant, Calcutta Corporation.
368	Bhuiya, Hem Chandra	..	Budge-Budge	..	..	Manashatala	..	..	do	..	..	Clerk, Cheviot Jute Mills, Chattragunge.
369	Bhowmic, Nagendra Nath	..	Manicktala	..	..	4, Canal East Road	..	..	do	..	..	Aratdar.
370	Bhutnagar Bulkissen	..	Beejpur	..	..	Kanchrapara Clerk's Colony, Beejpur.			do	..	..	Head Clerk, Dy Chief Mechanical Engineer's Office.
371	Biswas, Adya Nath	..	Swarupnagar	..	..	Vill Gokulpore, P O Tentulia	..		do	..	..	Landholder.
372	,,	Atiar Rahman ..	Deganga	..	..	Champatola, P O Hadipur	..		Muhammadan	..	..	Landholder and Aratdar.
373	,,	Bankim Chandra ..	Rajarhat	..	..	Patharghata, Rajarhat, Bistupur P O.			Hindu	..	..	Landholder.
374	,,	Bhupati Mohan ..	Kakdwip	..	..	Ghughudanga 4th portion Munsiff Babu's Katchery, P O Namkhana			do	..	..	Naib, Zamindar's Katchery.
375	,,	Bipin Behari ..	Entally	..	..	8, Panbagan Lane	..	..	do	..	..	Retired Government Servant.
376	,,	Bijoy Kali ..	Hashnabad	..	..	Gholtukri, at present Madhabkati	..	..	do	..	..	Zamindar.
377	,,	Fanibhusan ..	Ballygunge	..	..	13B, Baluhakkak Lane	..	..	do	..	..	Bailiff, License Department, Calcutta Municipality.
378	,,	Jatindra Nath ..	Basirhat	..	..	Jirikpore	..	..	do	..	..	Landholder.
379	,,	Kamakhaya Nath ..	Naihati	..	..	Gouripore	..	..	do	..	..	Jute Department, Gouripore Jute Mill.
380	,,	Khagendra Nath ..	Entally	..	..	2, Tangra Road	..	..	do	..	..	Clerk, E B Railway.
381	,,	Narendra Nath ..	Swarupnagar	..	..	Chargha	..	..	do	..	..	Landholder.
382	,,	Nirmal Baran ..	Beliaghata	..	..	56, Peary Mohan Sur Garden Lane			do	..	..	Engineer, Birla Bros, Ltd, Calcutta.

Serial No.	Name.	Thana.	Place of abode—Village, road or street.	Nationality.	Quality or occupation.
	B				
383	Biswas, Sankcr Lal ..	Beliaghata ..	.. 24, Narkeldanga Main Road ..	Hindu ..	.. Landlord.
384	„ Sita Nath ..	Swarupnagar ..	.. Nityanandakati	do ..	.. Landholder and merchant.
385	„ Sadhu Charan ..	Beliaghata ..	.. 40, Garpar Road	do ..	.. Clerk in a merchant office.
386	„ Sudhir Kumar ..	ditto ..	.. 56, Peary Mohan Sur Garden Lane	do ..	.. Building Surveyor.
387	Brahma, Chandra Kanta ..	Tollygunge ..	.. 23-7, Tollygunge Road ..	do ..	.. Clerk, Revenue Board.
388	Brahmachari, Phanindra Nath	ditto ..	.. ditto	do ..	.. Landholder.
	C				
389(S)	Chakladhar, Haran Chandra, MA	Tollygunge ..	.. 28-4, Sreemohan Lane ..	Hindu ..	.. Professor, University College.
390	Chakravarty, Abinash Chandra	Bhowanipur ..	.. 30-A, Harish Chatterjee Street ..	do ..	.. Merchant.
391(S)	„ Ahibhusan, BSC	Beejpur ..	.. Beejpur	do ..	.. Teacher, Technical School, Kanchrapara.
392	„ Amrita Lal ..	Bhaugal ..	.. Village Nasra, P O Bodra ..	do ..	.. Landholder.
393(S)	„ Baman Das ..	Basirhat ..	.. Basirhat School Boarding ..	do ..	.. School Master, Basirhat H E School.
394(S)	„ Ambica Charan	Canning ..	.. Deria, P O Bansra	do ..	.. Landholder and President Panchayet.
395	„ Barada Prasad ..	Pratapnagar ..	.. Kalikapur	do ..	.. Landholder.
396	„ Basantma Kumar	Sonarpore ..	.. Harinavi	do ..	.. ditto.

397	„	Ambika Charan	ditto	..	..	Sonarpore	..	..	do	..	.. ditto.
398	„	Binode Behari ..	Protapnagar	..	..	Kalikapore	..	..	do	..	.. Local Zamindar.
399	„	Birendra Nath ..	ditto	..	..	ditto	..	..	do	..	.. ditto.
400(S)	„	Chati Ram ..	Bishtupore	..	..	Julpia	..	..	do	..	.. Kaviraj.
401	„	Debendra Nath	Protapnagar	..	..	Kalikapore	..	..	do	..	.. Zamindar.
402	„	Durgadas ..	Habra	..	..	Dogachia, P O Dattapukur	..	do	..	..	Clerk, Calcutta Corporation.
403	„	Gadadhar ..	Tollygunge	..	..	6, Protap Aditya Road	..	do	..	..	Retired Post Master.
404	„	Horendra Krishna, BA.	Joynagar	..	..	Mazilpur	..	..	do	..	.. Teacher, J M Training School.
405	„	Hari Bhusan ..	Sonarpore	..	..	Kodalia	..	..	do	..	.. Head Clerk, Ripon College.
406	„	Hari Das ..	Falta	..	..	Santoshpur	..	..	do	..	.. Landholder.
407(S)	„	Jatindra Jiban ..	Diamond Harbour	..	..	Netra, P O Netra	..	..	do	..	.. School Master.
408	„	Jatindra Nath ..	Sonarpore	..	..	Kodalia ..	..	..	do	..	.. Clerk, Accountant-General, Bengal's Office.
409	„	Jiban Gopal ..	Falta	..	..	Mallikpur	..	..	do	..	.. Landholder.
410(S)	„	Jitendra Nath ..	Tollyganj C P	..	..	Plot 364, Rash Behari Avenue	..	do	..	..	Surveyor.

Serial No.	Name.	Thana.	Place of abode—Village, road or street.	Nationality.	Quality or occupation.
	C				
411	Chakravarti, Jogendra Nath ..	Bhowanipore ..	.. 20, Gobinda Bose Lane ..	Hindu ..	.. Clerk, Calcutta Corporation.
412(S)	„ Kashi Nath ..	Shampukur ..	.. Tala North Suburban School, 1-2, Marhatta Ditch Lane.	do ..	.. Senior Teacher, North Suburban School, Tala.
413	„ Karali Charan ..	Bhowanipore ..	.. 43, Sankaripara Road	do ..	.. Pandit, South Suburban Branch.
414	„ Khogendra Nath	Baruipore ..	.. Shikharbali..	do ..	.. Zamindar.
415	„ Krishna Mohan	Magrahat ..	.. Mollarchak, P O Magrahat ..	do ..	.. Landholder.
416	„ Lalit Mohan ..	Swarupnagar ..	.. Bithari	do ..	.. Government pensioner.
417	„ Manindra Nath ..	Habra ..	.. Raghunathpur, P O Rajibpur ..	do ..	.. President-Panchayet.
418(S)	„ Nagendra Nath, BA.	Khardah ..	.. Rahrah	do ..	.. Head Master, Sodepur H E School.
419	„ Nani Gopal ..	Baruipur ..	.. Ramnagar, P O South Ramnagar ..	do ..	.. Landholder.
420	„ Narayan Chandra	Sonarpur ..	.. Langalberia	do ..	.. ditto.
421	„ Narendra Nath ..	Swarupnagar ..	.. Banglani, P O Gokulpur ..	do ..	.. Teacher, Banglani U P School, and landholder.
422	„ Narendra Nath ..	Protapnagar ..	.. Kalikapore	do ..	.. Landholder.
423(S)	„ Nilmani, MA ..	ditto ..	.. Jagatdal	do ..	. Professor, Presidency College.
424	„ Nripendra Nath..	Baranagar ..	.. Baranagar, Baralpara	do ..	.. Clerk, High Court.
425	„ Nripendra Math, B.Sc	Pratapnagore ..	.. Village Kalikapur, P O Pratapnagore.	do ..	.. President, Kalikapur U B.
426(S)	„ Panchu Gopal ..	Baranagar ..	.. Ban Hooghly, P O Alambazar ..	do ..	.. Landholder and *Chairman, Baranagar Municipality.*

427	„	Paresh Chandra	Habra	..	..	Beliany, P O Gobardanga	..	do	..	..	Shopkeeper and paddy merchant.
428	„	Paresh Chandra	Rajarhat	..	..	Gopalpur, P O Dum Dum Cantonment.		do	..	..	Landholder.
429	„	Paresh Chandra	ditto	..	..	Gopalpur	.. ..	do	..	..	President, Kaikhali Hatiara Union Board.
430	„	Ramesh Chandra	ditto	..	..	Gopalpur, P O Dum Dum	..	do	..	..	Landholder.
431(S)	„	Sakti Pada ..	Beejpore	..	..	Kanchrapara Clerk's, Colony	..	do	..	..	Chargeman, Loco Office.
432	„	Santosh Kumar	Baruipore	..	..	Ramchandrapur	.. ..	do	..	..	Vice-President and Landholder.
433	„	Satish Chandra ..	Sonarpur	..	..	Kodalia ..	.. ..	do	..	..	Clerk, Telegraph Office.
434	„	Satish Chandra ..	Hasnabad	..	..	Bhebia ..	.. ..	do	..	..	President-Panchayet.
435(S)	„	Subodh Chandra	Bhowanipore	..	..	65, Lansdowne Road	.. ..	do	..	..	Head Assistant, District Health Office, No. 4.
436	„	Sudhir Chandra	Magrahat	..	..	Gokarni, P O Magrahat	..	do	..	..	Service-holder.
437	„	Surendra Nath ..	Diamond Harbour		..	Diamond Harbour	.. ..	do	..	..	Teacher Government Guru Training School, Diamond Harbour.
438	„	Suresh Chandra, BSc, B T	Barasat	..	..	Barasat ..	.. ..	do	..	..	Teacher, Barasat Government School.
439	„	Sushil Chandra	Sharupnagore	..	..	Bithari ..	.. ..	do	..	..	Head Master, M E School, Bithari K P Institution.
440	„	Umapada, BA ..	Sonarpur	..	..	Chandripota	.. ..	do	..	..	Teacher.
441(S)	Chandra, Anukul Chandra, Rai Sahib.		Tollygunj B P	..	..	Dhakuria	.. ..	do	..	..	Government pensioner.
442	„	Kartick Chandra, BA	Titagarh	..	..	Nilganj ..	.. ..	do	..	..	Landholder.
443	„	Promatha Nath ..	Entally	..	..	2, Palmer Bazar Road	..	do	..	..	Clerk, Medical College Hospital.
444	Chaudhury, Nripendra Kumar		Baduria	..	..	Jaduati ..	.. ..	do	..	..	Landholder.

Serial No.	Name.	Thana.	Place of abode—Village, road or street.	Nationality.	Quality or occupation.
	C				
445	Chattarji, Amulyadhan ..	Dum Dum ..	.. Nimta	Hindu ..	.. Municipal Head Clerk.
446	„ Amrita Lall ..	Joynagore ..	.. Photigoda	do ..	.. Landholder.
447	„ Ashutosh ..	Beniapukur ..	.. 51, Beniapukur Road	do ..	.. Contractor.
448	„ Amal Chandra ..	Habra ..	.. Gobardanga	do ..	.. Teacher, Gobardanga H E School.
449	„ Abhoy Charan ..	Titagarh ..	.. Talpukur	do ..	.. Tradesman.
450	„ Amarendra Nath ..	Nawapara ..	.. Nawapara	do ..	.. Tour Clerk, c-o Messrs Macneill & Co, Tea Estates Deptt, 2, Fairlie Place, Calcutta.
451	„ Ajoy Kumar ..	Naihati ..	.. Village Bolur, P O Hazeenagore, 24-Parganas.	do ..	.. Zamindar.
452(S)	„ B M	Ballyganj ..	.. 1, Love Lock Place	do ..	.. Businessman.
453	„ Bibhuti Bhusan ..	Tollygunge ..	.. 28-6, Sree Mohan Lane ..	do ..	.. Head Clerk, Manufacture Life Insurance Company.
454	„ B N	Taltala ..	.. 59, Durga Charan Banarji Lane ..	do ..	.. Clerk in the Office of the Surveyor-General.
455	„ Bagala Charan ..	Watgunge ..	.. 13-2, Ramkamal Mukherji Street ..	do ..	.. Private gentleman.
456	„ Bhabataran ..	Budge-Budge ..	.. Budge-Budge	do ..	.. Contractor.
457	„ Bibhuti Bhusan, BA	ditto ..	.. Surangabad, Budge-Budge P O ..	do ..	.. Head Master, Surangabad H E School.

458	„	Bibhuti Bhusan, BA	Entally	..	..	77-C, Deb Lane	..	do	.. .. Headmaster, Preparatory High School.
459	„	Bidhu Bhusan ..	Bhowanipore	..	..	64-B, Harish Mukherji Road	..	do	.. .. Contractor.
460	„	Binoy Krishna ..	Beliaghata	..	..	43A, Talpukur Road ..	..	do	.. .. Clerk.
461(S)	„	Binoy Krishna ..	Habra	..	..	Digra	..	do	.. .. Landholder.
462	„	Bhupendranath ..	Behala	..	..	Gossaipara ..	..	do	.. .. Contractor, c-o Mukherjee & Co, 11, Clive Row, Calcutta.
463	„	Brojo Nath ..	Rajerhat	..	..	Patharghata, Rajarhat, Bistoopur P O.		do	.. . Landholder.
464	„	Charu Chandra ..	Tollygunge	..	..	109-2, Lake Road ..	..	do	.. .. ditto.
465(S)	„	Dharani Dhar ..	Behala	..	..	Pathakpara, Behala P O	..	do	.. .. Retired Accountant, Military Accounts Department.
466	„	Dayamoy ..	Naihati	..	..	Bhatpara ..	..	do	.. .. Merchant.
467	„	Dhiraj Chandra ..	Budge-Budge	..	..	Haldarpara ..	..	do	.. .. Store-keeper, I B P & Co's Depot, Budge-Budge.
468	„	Dhirendra Nath, B Sc	Behala, Mograhat	.. ..	.. ..	Brahmosamaj Road (Sometimes) Dhora.	..	do	.. .. Clerk-in-charge, B N Ry Head Office.
469	„	Girish Chandra ..	Amdanga	..	..	Maricha, Majerpara P O	..	do	.. .. Landholder.
470	„	Gopal Chandra ..	Behala	..	..	Goragachha ..	..	do	.. .. Teacher, Behala M E School.

Serial No.	Name.	Thana.	Place of abode—Village, road or street.	Nationality.	Quality or occupation.
	C				
471	Chattarji, Hari Charan	Titagarh	Mohanpur	Hindu	Clerk.
472(S)	„ Hari Charan	Watgunge	71-1, Mansatala Lane	do	Clerk, B N Ry Office.
473	„ Hari Dhan	Bhangore	Nawrab	do	Zamindar.
474	„ Haripada	Kulpi	Gabberia	do	Landholder.
475(S)	„ Haripada	Dum-Dum	Kodihati	do	Auditor, A G B's Office (P W D), Calcutta.
476	„ Harish Chandra	Mahestala	Kristanagar	do	Clerk, Backer, Grey & Co, Ltd, Calcutta.
477	„ Jagannath	Barasat	Village Nibadai, P O Duttapukur	do	Landholder and President, Duttapukur Union Board.
478	„ Jitendra Nath	Dum-Dum	Kadihati	do	Landholder and clerk, merchant office.
479	„ Jitendra Nath	Budge-Budge	Nangi, P O Mahestala	do	Landholder.
480	„ Jugal Kishore	Dum-Dum	Kadihati	do	Assistant, Office of the Controller of Army Factory Accounts, 6, Esplanade East, Calcutta.
481	„ Jogesh Chandra	Jagatdal	Shyamnagar	do	Store-keeper, Indian Patent Stone Works, Mg Agents of Bird & Co.
482	„ Kailash Chandra	Cossipore	7, Seal's Garden Lane	do	Clerk, Imperial Bank.
483	„ Kalidas	Ballygunge	15-A, Earl Street	do	Landholder.
484	„ Kanai Lal	Chitpore	10, Banamali Chattarji Street	do	Municipal Commissioner and Surkey Mill Owner.

485	„	Kanai Lal	..	Bhowanipore	..	..	27, Mohim Halder Street	..	do	.. Clerk, District Board.
486	„	Kiran Chandra	..	Basirhat	..	..	Bashirhat	..	do	.. Sheristadar, 3rd Munsiff Court.
487	„	Kristo Lal	..	Beliaghata	..	..	"Netaikutir," Raja Rajendra Lal Mitter Road.		do	.. Accountant, Breakwell Co, Ltd.
488	„	Kumud Bihari	..	Habra	..	..	Gobordanga ..	..	do	.. Merchant and landholder.
489	„	Lakhan Chandra	..	Budge-Budge	..	..	Nangi, P O Mahestala ..	..	do	.. Landholder and service-holder.
490	„	Lakhi Narain	..	Tallygunge	..	..	92, Russa Road, South	..	do	.. Clerk, Shaw, Wallace & Co.
491	„	Lalit Mohan	..	Naihati	..	..	Banarjipara ..	..	do	.. Clerk, Office of Mackinnon, Mackenzie & Co, Calcutta.
492(S)	„	Mahadeb, MA	..	Baranagore	..	..	Sagore Dutta Free H E School, Kamarhaty.		do	.. Headmaster.
493	„	Manilal ..	..	Beniapukur	..	..	13, Banstala Lane ..	..	do	.. Clerk.
494(S)	„	Moni Mohan	..	Ballygunj	..	..	44, Lansdowne Road ..	..	do	.. School Master.
495	„	Mon Mohan	..	Baduria	..	..	Padhamapukur H E School, Calcutta.		do	.. ditto.
496(S)	„	Manmatha Nath	..	Baraset	..	..	Nibadhui	..	do	.. Landholder.
497	„	Manindra Nath	..	Kulpi	..	..	Gabberia, P O Ghateswara	..	do	.. ditto.
498	„	Moni Mohan	..	Baduria	..	..	Baduria ..	..	do	.. Head Master, Puddapukur Institute, Calcutta.
499	„	Mahit Mohan	..	Cossipore	..	..	23, Gopal Chandra Chattarji Road		do	.. Clerk, Government Stationery and Stamp Office.
500(S)	„	Mrinal Chandra	..	Baranagore	..	..	Ariadha	..	do	.. Clerk, Khardah Jute Mills.
501	„	Nani Gopal	..	Bijpur	..	..	Halisahar Chowdhurypara	..	do	.. Head Clerk, Electric Engineer's Office, Kanchrapara.

Serial No.	Name.	Thana.	Place of abode—Village, road or street.	Nationality.	Quality or occupation.
	C				
502	Chattarji, Nanilal ..	.. Joynagar ..	.. Joynagar, Banarjipara, P O Joynagore.	Hindu ..	.. Landholder.
503	„ Nagendra Nath ..	Titagarh ..	.. Talpukur	do ..	.. ditto.
504	„ Nagendra Nath ..	Barasat ..	.. Nibadai, P O Duttapukur ..	do ..	.. Teacher, Nibadai H E School.
505	„ Narendra Nath, BSC	Barrackpore ..	.. Sadarbazar	do ..	.. Analyst, Public Health Department, Government of Bengal.
506(S)	„ Nibaran Chandra ..	Garden Reach ..	.. 75-4, Garden Reach Road ..	do ..	.. Head Record-keeper, Chief Engineer's Office, B N Ry.
507	„ Nishi Nath ..	Bhowanipore ..	.. 5, Beltola Road	do ..	.. Landlord.
508	„ Nityananda ..	Naihati ..	.. Garifa	do ..	.. Clerk, Executive Engineer's Office, E B Ry.
509(S)	„ Phani Bhusan ..	Bhowanipore ..	.. 4, Gobinda Ghosal Lane ..	do ..	.. Honorary Magistrate, Alipore.
510	„ Paresh Nath ..	Behala ..	.. Bonomali Naskar's Road, Behala ..	do ..	.. Landholder.
511	„ Paresh Nath ..	Tollygunge B P	.. Dhakuria village and P O ..	do ..	.. Clerk.
512	„ Pramatha Nath ..	Baranagore ..	.. Haldarpara, Munshirhat ..	do ..	.. Tradesman, Dealer in paint.
513	„ Prafulla Kumar ..	Sarupnagar ..	.. Malangapara	do ..	.. Pandit, Mitra Institution, 21, Patuatola Lane, Calcutta.
514	„ Probodh Chandra ..	Haroa ..	.. Khashbalanda	do ..	.. Clerk, Merchant Office.
515(S)	„ Probodh Chandra, MA	Beliaghata ..	.. 27, Narkeldanga Main Road ..	do ..	.. Consulting Chemist and Proprietor, Scientific Supplies (Bengal) Co, Calcutta.
516	„ Probodh Chandra, MA, FCS, Lond, &c.	Baranagore ..	.. Dhakshineswar	do ..	.. Municipal Commissioner.

517(S)	„	Rabindra Nath	..	Alipore	..	Bengal Forms Office, Alipore	..	do	..	..	Assistant Store-keeper.
518	„	Rajani Kanta	..	Sonarpur	..	Mohinagore	..	do	..	..	Retired clerk.
519	„	Rangalal	..	Haroa	..	Haroabazar, P O Haroa	..	do	..	..	Merchant.
520	„	Rajendra Nath	..	Tollygunge	..	7, Mysore Road	..	do	..	..	Landholder.
521	„	Ram Chandra	..	Khardah	..	Panihati	..	do	..	..	Teacher, T N H E School.
522	„	Rishi Kesh	..	Baraset	..	Gustia, P O Badu	..	do	..	..	Clerk and Municipal Commissioner.
523	„	Sachindra Nath	..	Sonarpur	..	Gobindapur, P O Sonarpur	..	do	..	..	Landholder.
524	„	Saileswar	..	Naihati	..	Naihati	..	do	..	..	Clerk, Divisional Cashier's Office, East Indian Railway.
525	„	Santi Nath	..	Dum-Dum	..	Kadihati	..	do	..	..	Landholder and Clerk, North British Mercantile Office, 101-1, Clive Street.
526	„	Sarat Chandra	..	Khardah	..	Sukchar	..	do	..	..	Sugar Merchant.
527	„	Sarat Chandra	..	Baranagore	..	Areadah	..	do	..	..	Clerk, Khardah Jute Mill.
528	„	Satish Chandra	..	Maheshtala	..	Kristanagar	..	do	..	..	Clerk.
529	„	Satyapada	..	Manicktala	..	11, Telengabagan Lane	..	do	..	..	ditto.
530	„	Siddeswar	..	Maheshtala	..	Maheshtala	..	do	..	..	Landholder.
531	„	Siddeswar	..	Cossipore	..	77, South Sinthee Road	..	do	..	..	Contractor and Landowner.
532	„	Siris Chandra	..	Noapara	..	Shamnagore	..	do	..	..	Landholder.
533	„	Sourindra Mohan	..	Baruipore	..	Ramnagar	..	do	..	..	Teacher, Baruipore H E School.

Serial No.	Name.	Thana.	Place of abode—Village, road or street.	Nationality.	Quality or occupation.
	C				
534	Chattarji, Sudhamadhab	Magrahat	Dhura, P O Hatuaganj	Hindu	Landholder (Jotedar).
535	„ Surendra Nath	Sonarpur	Gobindapur, P O Sonarpur	do	Broker.
536	„ Surendra Nath	Behala	Gholsapore, Behala	do	Overseer, Port Commissioners' Office, Calcutta.
537	„ Surendra Nath	Tollygunge	Dhakuria village and P O	do	Clerk.
538	„ Suresh Chandra	Naihati	Banarjipara	do	Pensioner.
539(S)	„ Tarak Nath	Titagarh	Talpukur	do	Honorary Magte and Vice-Chairman, Titagarh Municipality.
540	„ Tulsi Charan	Dum-Dum	Kadihati	do	Clerk, Ry Department, Messrs Martin & Co, Calcutta.
541	Choudhury, Atulchandra	Watgunge	1-4, Hem Chandra Street	do	ditto.
542	„ Dinesh Chandra	ditto	P 316, Ballygunge Avenue	do	Personal Asstt to Agent, B N Ry, Kidderpore.
543	„ Haripada	Basirhat	Tantra, P O Bhabla	do	School Master.
544	„ Jatindra Nath	Kharda	Rahrah	do	Clerk, Calcutta Corporation.
545(S)	„ Narain Chandra, BA	Manicktala	57, Manicktala Main Road	do	Clerk, Bengal Secretariat, Public Works Department.

546	„	Rakhal Chandra	..	Joynagar	..	..	Dakshin Baraset	..	..	do	..	..	Merchant.
547	„	Nripendra Kumar		Baduria	..	..	Jadurati	..	..	do	..	..	Landholder.
548(S)	„	Ramendralal	..	Diamond Harbour		..	Kalagachia	..	..	do	..	..	School Master.
549	„	Sailendra Nath	..	Joynagar	..	..	Mayda, P O Baharu	..	..	do	..	..	Landholder.
550	„	Sati Ranjan	..	Naihati	..	..	Banerjipara	..	..	do	..	..	Rice Mill Owner.
551	„	Surendra Nath	..	Sonarpur	..	..	Harinavi	..	..	do	..	..	Senior Accountant, Accountant-General, Bengal's Office, Calcutta.
552	„	Sudhir Kumar	..	Joynagar	..	..	Majilpur	..	..	do	..	..	Head Master, M E School, Majilpur.
553(S)	„	Tara Nath	..	Naihati	..	..	Naihati	..	..	do	..	..	Rice Mill Overseer.
554	„	Makham Lall	..	Titagarh	..	..	Talpukur, P O Titagarh		..	do	..	..	Army Factory Account, Ichhapur.

D

555	Dalal, Durgapado	..	Hasnabad	..	..	Thuba, P O Taki	..	..	Hindu	..	..	Landholder.
556	„ Jnanendra Nath	..	ditto	..	..	ditto	..	..	do	..	..	ditto.
557	Damari, Lalit Mohan	..	Bhangore	..	..	Narikelberia	..	..	do	..	..	Zamindar.
558(S)	Das, Aghore Nath	..	Tollygunge	..	..	17-1, Nepal Bhattacharji Street	..		do	..	..	Superintendent, Secretary's Office, Calcutta Corporation.
559	„ Akhoy Kumar	..	Alipore	..	..	Bengal Survey Office	..	..	do	..	..	B A Survey Drawing Department.

Serial No.	Name.	Thana.	Place of abode—Village, road or street.	Nationality.	Quality or occupation.
	D				
560	Das, Annada Prosad ..	.. Dum-Dum ..	.. Gorai	Hindu ..	.. Clerk, Walter and Platt Limited, 7, Hare Street, Calcutta.
561	„ Ashutosh	.. Cossipore ..	.. 71, South Sinthi Road ..	.. do ..	.. Landholder.
562	„ Amulya Charan ..	.. ditto ..	.. 2, Central Sinthi Road ..	do ..	.. Landholder and Contractor.
563	„ Amburish Chandra ..	.. Hasnabad ..	.. Taki	do ..	.. Commissioner, Taki Municipality.
564	„ Anil Kumar, BA ..	.. Bijpur ..	.. Bijpur	do ..	.. Clerk, Halishahar Stores, E B Ry.
565	Dutta, Bamapada ..	.. Saugore ..	.. Nonachak, P O Muriganga ..	do ..	.. Landholder.
566	Das, Basanta Kumar ..	.. Behala ..	.. Gholshapore	do ..	.. Clerk, Nestle's and Anglo Swiss Condensed Milk Co, No. 4, Garstin Place, Calcutta.
567(S)	„ Bhupendra Ch ..	.. Bhowanipore ..	.. 99-B, Kalighat Road	do ..	.. Professor, Presidency College, Calcutta.
568	„ Bipin Behari ..	.. Titagarh ..	.. Charnock	do ..	.. Head Clerk, Titagarh Municipal Office.
569	„ Birendra Nath ..	.. Baduria ..	.. Peara	do ..	.. Head Master, Tantulia M E School.
570(S)	„ Bhut Nath ..	.. Kulpi ..	.. Gabberia	do ..	.. Head Master, Gabberia H E School.
571	„ Dhirendra Nath ..	.. Magrahat ..	.. Multi	do ..	.. Clerk, Stephen and Sons, Calcutta.
572	„ Digambar	.. Cossipore ..	.. Rajabagan Lane	do ..	.. Landholder.
573	„ Gokul Chandra ..	.. Barrackpore ..	.. Sadar bazar	do ..	.. Merchant.
574	„ Gokul Chandra ..	.. Dum-Dum ..	.. Nagerbazar	do ..	.. ditto.
575	„ Gosai Charan ..	.. Cossipore ..	.. 73, South Sinthi Road ..	do ..	.. Contractor and Landholder.

576	„	Gour Charan	..	ditto	..	..	9, Kedar Das Lane	..	..	do .. .. ditto.
577	„	Gour Mohan	..	Magrahat	..	..	Sibpur, P O Multi	..	..	do .. .. Landholder.
578	„	Gopi Krishna	..	Budge-Budge	..	..	Sherangabad, P O Budge-Budge	..	..	do .. .. Head Clerk, Caledonian Jute Mills.
579	„	Gosta Bihari	..	Maniktala	..	..	42-A, Baldeopara Road	..	..	do .. .. Retired Assistant, in the Office of the Education, Health and Lands, Government of India.
580(S)	„	Mr J N ..	..	Beliaghata	..	..	57-4, Raja Dinendro Narain Street			do .. .. Coal Merchant.
581	„	Jnanendra Nath	..	Khardah	..	..	Titagarh, Chowdhuripara	..	..	do .. .. Accountant, Thomas Duff, Calcutta.
582(S)	„	Jnanendra Nath, BA	..	Barrackpore	..	..	Sadar Bazar, Golamahal	..	..	do .. .. Teacher, Debi Prosad H E School.
583	„	Kanailal, BA	..	Baruipur	..	..	Madarat	..	..	do .. .. 2nd Master, Madarat H E School.
584	„	Kartic Chandra	..	Baraset	..	..	Nibodhoi, P O Duttapukur	..	..	do .. .. Trader.
585	„	Krishna Dhan	..	Tollygunge B P		..	Dhakuria village and P O	..	..	do .. .. Teacher.
586	„	Khetra Nath	..	Bhowanipur	..	..	36-1, Sambhu Nath Pandit Street	..	..	do .. .. 2nd Clerk, Coal Audit Section, E I Ry.
587	„	Manmatha Nath	..	Chitpur	..	..	56, Belgachia Road	..	..	do .. .. Landholder.
588	„	Nagendra Nath	..	Baranagar	..	..	Areadah	..	..	do .. .. Head Clerk, Kamarhati Jute Mill.
589	„	Nakul Chandra	..	Entally	..	..	5-M, Middle Road	..	..	do .. .. Clerk, Port Commissioners' Office.

Serial No.	Name	Thana.	Place of abode—Village, road or street.	Nationality.	Quality or occupation.
	D				
590	Das, Nalini Mohan, ISC ..	Watgunge ..	.. 3, Monsatala Lane	Hindu ..	.. Merchant.
591	,, Narendra Nath ..	Budge-Budge ..	.. Dakshin Bawali, P O Bawali ..	do ..	.. Landholder. (He generally resides at 11, Ram Banerji's Lane, Bowbazar, Calcutta.)
592	,, Niranjan	Chitpore ..	.. 18, Barrackpore Trunk Road ..	do ..	.. Assistant teacher, Raja Manindra H E School.
593	,, Nritya Gopal ..	Cossipore ..	.. 73, South Sinthi Road ..	do ..	.. Contractor and Landholder.
594	,, Panna Lal	Khardah ..	.. Khardah	do ..	.. Audit Superintendent, Accountant-General, Bengal.
595	,, Pran Krishna ..	Watgunge ..	.. 3-1, Durgadas Lane	do ..	.. Merchant.
596	,, Prakash Chandra ..	Sonarpore ..	.. Rajpur	do ..	.. Municipal Commissioner, Rajpur Municipality.
597	,, Pran Krishna ..	Behala ..	.. Abhay Bidyalankar Road, Pathakpara.	do ..	.. Businessman.
598	,, Priya Nath ..	ditto ..	.. ditto ..	do ..	.. Merchant.
599	,, Sashi Bhusan ..	Sonarpore ..	.. Gobindapur	do ..	.. ditto.

600	„	Tarini Charan	..	Hasnabad	..	..	Bylani	do	..	.. Service.
601	„	Gupta, H C	..	Tollygunge	..	..	Bengal Technical Institute, Jadabpur.	do	..	.. Superintendent, Bengal Technical Institute.
602 (S)	„	„ Sudhangshu Bhusan		Manicktala	..	..	3, Madhusudan Mukherji Lane ..	do	..	.. Clerk, Andrew Yule & Co, Calcutta.
603	„	„ Jatish Chandra	..	Baranagar	..	..	Kutighat	do	..	.. Sanitary Inspector, Baranagar Municipality.
604	„	„ Nakuleswar	..	Bhowanipore	..	..	14-C, Gobinda Ghosal Lane ..	do	..	.. Clerk, Bengal Forms Department.
605	„	Nalinakha ..	..	Manicktala	..	..	28, Badridas Temple Street ..	do	..	.. Merchant.
606	„	Kayal, Surendra Nath		Sonarpur	..	..	Rajpur Feeder Road	do	..	.. Head Clerk, La Martinière College, Calcutta.
607	„	Srinivas ..	..	Baranagar	..	..	Pramanik Ghat Road	do	..	.. Retired Inspector, Calcutta Corporation.
608	„	Gupta, Mahendra Nath		Bhowanipore	..	..	52, Kalighat Road	do	..	.. Clerk, I-G of Prisons' Office.
609 (S)	„	Gosta Behari	..	Manicktala	..	..	42-A, Baldeapore Road ..	do	..	.. Retired Assistant in the office of the Department of Education, Health and Lands, Government of India.
610	Datta, Amarendra Nath		..	Baraset	..	..	Nibadhui	do	..	.. Teacher, Nibadhui H E School.
611	„	Amode Nath	..	Baruipur	..	..	Baruipur Road	do	..	.. Landholder.
612	„	Bankim Chandra	..	Magrahat	..	..	Usti	do	..	.. Ditto.
613	„	Beni Madhab	..	Sonarpur	..	..	Kamerabad	do	..	.. Clerk, Ralli Brothers, Calcutta.
614	„	Barada Charan	..	Kulpi	..	..	Karnajali P O	do	..	.. Landholder.
615	„	Bidya Das	..	Joynagar	..	..	Majilpur	do	..	.. Zamindar.

Serial No.	Name.	Thana.	Place of abode—Village, road or street.	Nationality.	Quality or occupation.
	D				
616	Datta, Bijoy Krishna ..	Hasnabad ..	.. Sutirati	Hindu ..	.. Landholder.
617	„ Bijendra Krishna ..	Ballygunge ..	.. 3, Valmeek Street	do ..	.. Retired Licence Inspector, Calcutta Corporation.
618	„ Birendra Krishna ..	Joynagar ..	.. Majilpur	do ..	.. Zamindar.
619	„ Debendra Nath ..	Beliaghata ..	.. 29-A, Jogipara Lane	do ..	.. Supervisor, Indian Patent Stone Factory, Bird & Co.
620	„ Dokari Bhusan ..	Baraset ..	.. Jagulia, P O Choto Jagulia ..	do ..	.. Clerk, Martin & Co.
621(S)	„ Hari Das ..	Beniapukur ..	.. 6, Beniapara Lane	do ..	.. Assistant, Messrs Shaw, Wallace & Co.
622(S)	„ Harendra Nath, BA ..	Bhowanipur ..	.. 29, Allenby Road	do ..	.. Teacher, Paddapukur Institution.
623	„ Harendra Nath ..	Diamond Harbour	.. Diamond Harbour	do ..	.. Landowner.
624	„ Hari Narain ..	Maheshtala ..	.. Jagannathnagore, P O Maheshtala	do ..	.. Landholder.
625	„ Hem Nath ..	Magrahat ..	.. Gokarni, P O Magrahat ..	do ..	.. Service-holder.
626	„ Hirendra Nath ..	Chitpur ..	.. 16, Paik Para Raja Monindra Road	do ..	.. Zamindar and author of miscellaneous books.
627	„ Hriday Nath ..	Sonarpur ..	.. Kamerabad	do ..	.. Service-holder.
628	„ Jadu Nath ..	Banipore ..	.. Dudha	do ..	.. Landholder.
629	„ Khagendra Nath, BA ..	Joynagar ..	.. Majilpur	do ..	.. Clerk, Verification Department, Accountant-General, Bengal's Office, Paper Currency Buildings, Calcutta.

630	„	Jatindra Nath	..	Magrahat	..	..	Multi, P O Multi	..	..	do	..	.. Service-holder.
631	„	Jatindra Nath, BA	..	Budge-Budge	..	..	Nischintapur	..	..	do	..	.. Headmaster, H E School, Kalipore.
632(S)	„	Kali Das	..	Joynagar	..	..	Majilpur	..	..	do	..	.. Zamindar.
633	„	Karuna Moi	..	Bhowanipur	..	..	17, Chandra Nath Chatterjee Street			do	..	.. Landlord.
634	„	Kishori Mohan	..	Kulpi	..	..	Ram Chandrapur, P O Kulpi	..		do	..	.. Landholder.
635	„	Krista Kishore	..	Alipore	..	..	21, Mayerpur Road	..	..	do	..	.. Draftsman, City Architect Department, Calcutta Corporation.
636	„	Lalit Mohan	..	Bistupore	..	..	Bakra	..	..	do	..	.. Landholder and Merchant.
637(S)	„	Mahendra Nath, MA	..	Rajarhat	..	..	Narayanpore	..	..	do	..	.. Asstt, Administrator-General's Office.
638	„	Lalit Kumar	..	Canning	..	..	Canning Town, P O Canning	..		do	..	.. Merchant.
639	„	Lalit Mohan	..	Sarupnagar	..	..	Amudia	..	..	do	..	.. Landholder and Member, Union Board.
640	„	Lalit Mohan	..	Dum Dum	..	..	Dum Dum Cantonment		..	do	..	.. Head Clerk, Dum Dum Municipality.
641	„	Mrinmay	..	Diamond Harbour		..	Kalagachia, P O Sarisa		..	do	..	.. Landholder.
642	„	N, BA	..	..	Chitpur	..	..	18, B T Road	..	..	do	.. Assistant Teacher, Raja Manindra H E School.
643	„	Natabar Chandra	..	Alipore	..	..	68-B, Mayerpur Road	..	..	do	..	.. Merchant.
644	„	Prafulla Kumar, BA		Beliaghata	..	..	26-2, Jugipara Lane	..	..	do	..	.. Clerk, Chief Accountant's Office, E I R.
645(S)	„	Promod Kumar	..	Watgunj	..	..	29, Monshatolla Lane		..	do	..	.. Clerk, Calcutta Corporation.
646	„	Pulin Behari	..	Magrahat	..	..	Gokarni	..	..	..	do	.. .. Landholder.

Serial No.	Name.	Thana.	Place of abode—Village, road or street.	Nationality.	Quality or occupation.
	D				
647	Datta, Sailendra Nath	Alipore	5-B, Gopalnagar Road	Hindu	Merchant.
648(S)	,, Sarat Chandra, BA	Joynagar	Kucholpara, Joynagar	do	Headmaster, J M Training School, Joynagar.
649	,, Satis Chandra	Barrackpore	Bazaz Mahal	do	Clerk, Palta Waterworks.
650	,, Satis Chandra	Magrahat	Multi, P O Multi	do	Service-holder.
651	,, Sital Chandra	Chitpur	22, Simlaipara Lane	do	Clerk, E B Railway.
652	,, Sree Pada	Diamond Harbour	Sarisha	do	Landowner.
653(S)	,, Subodh Nath	Baruipur	Baruipur	do	Zamindar, Baruipur.
654(S)	,, Sudhir Krishna	Joynagar	Majilpur	do	Zamindar.
655	,, Sujay Krishna	Baranagar	Paramanik Ghat Road	do	Merchant.
656	,, Susil Kumar	Beliaghata	76-2-E, Garpar Road	do	Assistant Librarian, Commercial Library.
657	,, Tulshi Das	Bijpur	Bijpur	do	Head Clerk, Halisahar Stores, E B Ry.
658	Dewan, Belatali	Protapnagore	Ghuteare Sarif	Muhammadan	President, Bansra Union Board.
659(S)	Dey, Apurba Krishna	Entally	1-1, Palmer Bazar Road	Hindu	Merchant.
660	,, Haridhan	Bhowanipore	78, Kalighat Road	do	Landlord.

661	„	Amrita Lal	..	Sonarpur	..	..	Kamerabad	..	..	do	..	.. Landholder.
662	„	Haripada	..	Baruipur	..	..	Dudnoy, P O Ramnagar	..	..	do	..	.. ditto.
663	„	Jadu Gopal	..	ditto	..	..	Tala North Suburban School	..	..	do	..	.. Senior Teacher, North Suburban School, Tala.
664	„	Krishna Chandra	..	Beliaghata	..	..	46, Peari Mohan Sur Garden Lane	..	..	do	..	.. Landholder.
665	„	Lalit Mohan	..	Habra	..	..	Rajibpur village and P O	..	..	do	..	.. President-Panchayat.
666(S)	„	Nitai Hari, BA	..	ditto	..	..	Khatora, P O Gobardanga, at present 11B, Mohan Lal Street, Shambazar.		..	do	..	.. Shorthand reporter.
667(S)	„	Prasad Chandra	..	Beniapukur	..	..	2-B, Linton Street	..	..	do	..	.. Clerk, Burn & Co.
668(S)	„	Probodh Chandra, BA, BT.		Beliaghata	..	..	Narikeldanga George H E School	..	..	do	..	.. Headmaster, Narikeldanga George H E School.
669(S)	„	Rajendra Nath	..	Baraset	..	..	Koyra	..	..	do	..	.. Landholder.
670	„	Ranadhir	..	Alipore	..	..	7/3, Mayerpore Road	..	..	do	..	.. Schoolmaster.
671	„	Sailendra Nath	..	Entally	..	..	64, South Road Entally	..	..	do	..	.. ....
672	„	Sakha Nath	..	Alipore	..	..	27K, Alipore Road	..	..	do	..	.. Schoolmaster and Landholder.
673	„	Sanyashi Charan	..	Watgunj	..	..	7, Michael Dutt Street	..	..	do	..	.. Contractor.
674	„	Satish Chandra	..	Baruipur	..	..	Dhapdhapi P O	..	..	do	..	.. President-Panchayat and Landholder.
675	„	Shamapada	..	Basirhat	..	..	Itinda	..	..	do	..	.. Cloth Merchant.

Serial No.	Name.	Thana.	Place of abode—Village, road or street.	Nationality.	Quality or occupation.
	D				
676(S)	Dey, Surendra Nath, BA	Cossipore	32, Ratan Babu's Ghat Road	Hindu	Assessor, Cossipore-Chitpur Municipality.
677	„ Surendra Nath, MA	Entally	5-N, Middle Road	do	Office Superintendent, Accountant-General, Bengal.
678	„ Suresh Chandra	Habra	Prithiba, P O Prithiba	do	Head Clerk, Collection Department, Calcutta Corporation.
679	Deb, Shital Krishna	Diamond Harbour	Diamond Harbour	do	Clerk, E B Railway Audit Office, Sealdah.
680(S)	„ Jnanendra Nath, BA	Joynagore	Mazilpur	do	Assistant Headmaster, Joynagore Institution.
681(S)	„ Rohini Kumar	Manicktala	56, Gouribari Lane	do	Manager, Bhowani Engineering and Trading Co.
682	Dhar, Asutosh	Budge-Budge	Pandit's Road, Budge-Budge	do	Contractor.
683	„ Asoke Kumar	Barrackpore	Supdt, Palta Water-works	do	Supdt, Palta Water-works.
684(S)	„ Jogesh Chandra, MA	Diamond Harbour	Hatuganj P O	do	Headmaster, Hatuganj H E School.
685	Dhole, Banwari Lal	Baranagore	Bon-Hooghly	do	Merchant.
	G				
686	Ganguli, Banamali	Alipore	42-1, Chetla Road	Hindu	Merchant.
687	„ Bhupendra Nath	Watgunj	10-B, Jagannath Sarkar Lane	do	Clerk, Chief Engineer's Office, B N Railway.

688	„	Durga Das	..	Tollygunge (C P)	..	P183, Ballygunge Avenue	..	do	..	Inspector of Accounts, Port Commissioners.
689	„	Ganesh Chandra	..	Pratapnagar ..	..	Narayanpur, P O Pratapnagar	..	do	..	Service-holder.
690	„	Haro Lal, BA	..	Barasat ..	..	Nibadhai ..	..	do	..	Headmaster, Nabadhai H E School.
691	„	Janaki Kanta	..	Entally ..	..	9, Ananda Palit Road	..	do	..	Clerk.
692(S)	„	Jamini Prakash	..	Banipukur ..	..	171, Lower Circular Road	..	do	..	Zamindar.
693(S)	„	N B ..	..	Ballygunge ..	..	100, Lansdowne Road	..	do	..	Businessman.
694(S)	„	N ..	..	Tollygunge ..	..	P183, Ballygunge Avenue	..	do	..	Service-holder.
695	„	Phani Bhushan	..	Beliaghata ..	..	115, Narkeldanga North Road	..	do	..	Clerk.
696	„	Surendra Nath	..	Barrackpore ..	..	Orderly Bazar, Barrackpore	..	do	..	Clerk, Cossipore Volunteers' Office, Barrackpore.
697	„	Ashutosh, BA	..	Baranagore ..	..	Khasbagan ..	..	do	..	Head Clerk, Executive Engineer's Office, P W D Canals Division, Calcutta.
698	Gayen,	Ahamad Ali	..	Sagore ..	..	Vill Chamagari ..	..	Muhammadan	..	Collecting Panchayet and Landholder.
699	„	Banamali	..	Hasnabad ..	..	Khejurberia ..	..	Hindu	..	Landholder.
700	„	Bipin Bihari	..	ditto ..	..	Dulduli ..	..	do	..	ditto.
701	„	Santosh Kumar	..	Basirhat ..	..	Dhanyakuria ..	..	do	..	Zamindar.
702	Gazi,	Abdul Latif ..	..	Mathurapur ..	..	Chandbhasa, P O Kasinagar	..	Muhammadan	..	Landholder
703	„	Abdul Sukur	..	Amdanga ..	..	Khurigachi ..	..	do	..	ditto.

Serial No.	Name.	Thana.	Place of abode—Village, road or street.	Nationality.	Quality or occupation.
	G				
704	Ghatak, Ganesh Chandra ..	Manicktala ..	.. 151-E, Raja Dinendra Narayan Street.	Hindu ..	.. Landholder and Merchant.
705	„ Hari Narayan ..	Basirhat ..	.. Basirhat	do ..	.. Landholder.
706	„ Sarat Chandra ..	Bijpur ..	.. Bijpur	do ..	.. Clerk, D M Office, E B Ry, Bijpur.
707(S)	Ghosh, Abhoy Kali, MSC ..	Beliaghata ..	.. 164, Manicktala Main Road ..	do ..	.. Chemist, B C and P W.
708	„ Ajit Kumar ..	Tollygunge ..	.. Sikha Sanga, Bistupur ..	Christian	.. Teacher, L M S Institution.
709	„ Akshoy Kumar ..	Habra ..	.. Rajibpur / Fort William, Calcutta ..	Hindu ..	.. Clerk, Military Works, Fort William.
710	„ Ashutosh ..	Tollygunge ..	.. 8, Andul Raj Road	do ..	.. Overseer, Calcutta Corporation.
711(S)	„ Basanta Kumar, BA ..	Behala ..	.. Shahapore	do ..	.. Assistant, Accounts Department, Corporation of Calcutta, No. 5, Corporation Street, Calcutta.
712	„ Badal Kumar ..	Naihati / Chief Engineer's Office, E B Ry.	Garifa / 3, Kailaghat Street, Calcutta ..	do ..	.. Draftsman, Engineering Department, E B Ry.

713	„	Banamali ..	..	Garden Reach ..	..	Paharpur Road ..	..	do ..	..	Zamindar.
714	„	Bankabehari ..		Deganga ..	..	Arjullapur, P O Sashan ..		do ..	..	Landholder.
715(S)	„	B C ..	..	Watgunge ..	..	14, Hem Chandra Street ..		do ..	..	Zamindar.
716	„	Banku Behari ..		Titagarh ..	..	Titagarh ..	..	do ..	..	Lime Merchant, Charnack Village.
717(S)	„	Banku Behari, (Oxon), BSc (Cal).	BA	Khardah ..	..	Bandipur ..	..	do ..	..	Zamindar and Merchant.
718	„	Basanta Kumar ..		Beliaghata ..	..	22, Talpukur Road ..	..	do ..	..	Clerk, Calcutta Corporation.
719	„	Baikantha Nath ..		Kulpi ..	..	Daria ..	..	do ..	..	Zamindar.
720	„	Bijoy Krishna ..		Khardah ..	..	Panihati ..	..	do ..	..	Clerk, Merchant office, Calcutta.
721	„	Benode Behari ..		Basirhat ..	..	Bhabla ..	..	do ..	..	Headmaster, Bhabla School.
722	„	Bhupal Chandra ..		Nawpara ..	..	Nawabgunge ..	..	do ..	..	Landholder.
723	„	Behari Lall ..		Mohestola ..	..	Mohestola, P O Mohestala ..		do ..	..	Merchant.
724	„	Bijay Krishna ..		Naihati ..	..	Garifa ..	..	do ..	..	Clerk, E B Railway, Kanchrapara.
725	„	Bijoy Krishna ..		Bhowanipore ..	..	29, Harish Chatterjee Street ..		do ..	..	Merchant.
726(S)	„	Bishnu Das ..		Basirhat ..	..	Basirhat ..	..	do ..	..	Assistant Secretary, Central Bank, Taki.

Serial No.	Name.	Thana.	Place of abode—Village, road or street.	Nationality.	Quality or occupation.
	G				
727	Ghosh, Chandi Charan ..	Baruipur ..	.. Atghora, P O Baruipur ..	Hindu ..	.. Landholder.
728	„ Chandi Charan ..	Behala ..	.. Barisha	do ..	.. Landholder and Municipal Commissioner.
729(S)	„ Chandra Kumar ..	Beliaghata ..	.. 10, Rammohan Roy Road ..	do ..	.. District Building Surveyor, Calcutta Corporation.
730	„ Chuni Lal ..	Baduria ..	.. Arbalia	do ..	.. Landholder.
731	„ Chuni Lal ..	Cossipore ..	.. 13-2, Kedar Das Lane ..	do ..	.. Contractor and Landholder.
732(S)	„ Chandi Prosad ..	Khardah ..	.. Bosepara, Khardah	do ..	.. Government pensioner.
733	„ Dhirendra Krishna ..	Kulpi ..	.. Kulpi	do ..	.. Pandit, Guru Training School.
734	„ Fakir Chandra, BA ..	Tollygunge B P	.. Dhakuria village and P O ..	do ..	.. Clerk, Bengal Secretariat.
735	„ Fakir Chandra ..	Naihati ..	.. Chotabudhria	do ..	.. Clerk, Loco Shop, Kanchrapara.
736	„ Gobinda Chandra ..	Bhowanipore ..	.. 86-D, Harish Chattarji Street ..	do ..	.. Sanitary Inspector, Calcutta Corporation.
737	„ Gopal Krishna ..	Baruipur ..	.. Ramnagar, P O South Ramnagar ..	do ..	.. Clerk, Commercial Intelligence Department, 1, Commercial House, Calcutta.
738	„ Gopendra Nath ..	Naihati ..	.. Mitrapara, Naihati	do ..	.. Clerk, Deputy Inspector-General's Office, and Landholder.
739	„ Haro Mohan ..	Jagatdal ..	.. Athpur	do ..	.. Zamindar.

740	„	Hari Pada	..	Baruipur	..	..	Sashan, P O Baruipur	..	do	..	..	Retired Clerk, Custom House, Calcutta
741	„	Hari Pada	..	Bistupur	..	..	Jaychandipur	..	do	..	..	Service-holder.
742	„	Hari Mohan, BA	..	Entally	..	..	29/2, Ananda Palit Road	..	do	..	..	Retired Government servant
743	„	Hiran Chandra	..	Hasnabad	..	..	Taki	..	do	..	..	Zamindar.
744	„	Hira Lal	..	Amdanga	..	..	Madhabpar, P O Duttapukur	..	do	..	..	President, Rangpur Union Board and Landholder.
745	„	Hrishikesh	..	Khardah	..	..	Sukchar, Kulinpara	..	do	..	..	Merchant.
746	„	Hrishikesh	..	Bistupore	..	..	Makhalia	..	do	..	..	Landholder and Merchant.
747	„	Indu Bhusan	..	Hasnabad	..	..	Taki	..	do	..	..	Businessman.
748	„	Jadab Chandra	..	Alipore	..	..	16, Durgapur Lane	..	do	..	..	School Master.
749	„	Janaki Nath	..	Tollygunge BP		..	Dhakuria	..	do	..	..	Landholder.
750	„	Jatindra Mohan	..	Joynagore	..	..	Joynagore, Kuchalpara	..	do	..	..	ditto.
751	„	Jatindra Nath	..	Naihati	..	..	Garifa	..	do	..	..	Clerk in the office of the Commissioners for the Port of Calcutta.
752	„	Jatindra Nath	..	Hasnabad	..	..	Rameswarpur	..	do	..	..	Landholder.
753	„	Jatish Chandra	..	Magrahat	..	..	Kaknapara	..	do	..	..	ditto.
754 (S)	„	Jyotish Chandra	..	Ballygunge	..	..	35-10, Paddapukur Road	..	do	..	..	Businessman.
755	„	Jatindra Mohan	..	Naihati	..	..	Naihati	..	do	..	..	Municipal Commissioner.

Serial No.	Name.	Thana.	Place of abode—Village, road or street.	Nationality.	Quality or occupation.
	G				
756	Ghosh, Jatindra Nath ..	Harwa ..	.. Salipore ..	.. Hindu ..	.. Landholder.
757	„ Jatindra Nath ..	Bishtupur ..	.. Makhalia ..	.. do ..	.. Landholder and teacher of Bakra H E School.
758	„ Jatindra Lal ..	Bhowanipore ..	.. 46, Haris Chatterjee Street ..	do ..	.. Clerk, Surgeon-General's office, Writers' Buildings.
759	„ Jnanendra Nath ..	Naihati ..	.. Naihati, Mitrapara ..	.. do ..	.. Clerk in the office of the Inspector-General of Police, Calcutta.
760	„ Jnanendra Nath ..	Bhowanipore ..	.. 49A, Girish Mukharjee Road ..	do ..	.. Landlord.
761	„ Kali Das, BSC ..	Sonarpur ..	.. Kodalia ..	.. do ..	.. Contractor.
762	„ Kali Pada ..	Ekbalpore ..	.. 3, Gopal Kristo Ghose Lane ..	do ..	.. Office of the Chief Auditor, B N Railway, Calcutta.
763	„ Kasi Prosad ..	Khardah ..	.. Khardah ..	.. do ..	.. Zamindar, Retired Commissariat Agent, Military Department.
764	„ Kisto Dhon ..	Alipore ..	.. 16A, Judge's Court Road ..	do ..	.. Businessman.
765	„ Kristo Dhone ..	Mahestala ..	.. Mahestala ..	.. do ..	.. Merchant and Landholder.
766	„ Mazumdar, Kumar Prasanna.	Naihati ..	.. Naihati ..	.. do ..	.. Merchant and Mill-owner.

767 (S)	„	Nirmal Chandra	..	Basirhat	..	..	Dhanyakuria	..	..	do	..	..	Headmaster, Dhanyakuria H E School.
768	„	Kumud Nath	..	Dum-Dum	..	..	Dighla	..	..	do	..	..	Landholder.
769	„	Kunja Behary	..	Alipore	..	..	4, Chetla Hat Road	..	..	do	..	..	Zamindar.
770	„	Makhan Lal	..	Baduria	..	..	Taragunia, P O Taragunia	..	do	..	..	..	Special Assistant, National Life Insurance Company, c-o Messrs Martin & Co, Calcutta.
771	„	Makhan Lal	..	Bhangore	..	..	Jagulgachi	..	..	do	..	..	Zamindari Employee.
772	„	Makhanlal	..	Budge-Budge	..	..	Feeder Road, Budge-Budge	..	do	..	..	..	Clerk, Jardine Skinner & Co.
773	„	Manmatha Nath	..	Deganga	..	..	Hadipore	..	..	do	..	..	Landholder.
774	„	Manmatha Nath	..	Ballygunge	..	..	10-B, Chakraberia Lane	..	do	..	..	..	License Inspector, Calcutta Corporation.
775	„	Mani Mohan	..	Basirhat	..	..	Sangrampur	..	..	do	..	..	President Panchayat.
776	„	Nagendra Nath	..	Budge-Budge	..	..	N C Ghosh Road	..	..	do	..	..	Contractor.
777	„	Nagendra Nath	..	Bhangore	..	..	Bamania	..	..	do	..	..	Landholder.
778	„	Nagendra Nath	..	1. Metiabruz .. 2. Sandeshkhali		..	1. Kankhuli .. .. 2. Ghosepara Kutchery in Ghosepara Abad.			do	..	..	Landholder and Money-lender.
779	„	Nalini Kanta	..	Rajarhat	..	..	Kaikhali village, Dum-Dum P O	..	do	..	..	..	Landholder.
780	„	Nani Gopal, BL	..	Habra	..	..	Rajibpur	..	..	do	..	..	Assistant Headmaster, Rajibpur H E School.
781(S)	„	Nani Gopal, [illegible]	..	ditto		..	ditto	..	..	do	..	..	Teacher, [illegible] V M School.

Serial No.	Name.	Thana.	Place of abode—Village, road or street.	Nationality.	Quality or occupation.
	G				
782	Ghosh, Narayan Chandra ..	Baranagore ..	.. Bon-Hooghly	Hindu ..	.. Zamindar;
783	„ Narayan Das, BA ..	Baruipur ..	.. Saleypur	do ..	.. Assistant Teacher, Baruipur H E School.
784	„ Narendra Nath ..	Basirhat ..	.. Saipala	do ..	.. ditto.
785	„ Narendra Nath ..	Amdanga ..	.. Joypur, P O Rajibpur ..	do ..	.. ditto.
786	„ Narendra Nath ..	Sonarpur ..	.. Boral	do ..	.. ditto.
787	„ Naresh Chandra ..	Nowpara ..	.. Ishapore Rifle Factory ..	do ..	.. Office Ishapore Rifle Factory.
788	„ Nut Behari ..	Watgunge ..	.. 5, Ashu Babu Lane	do ..	.. Zamindar.
789	„ Panchanan ..	Bhangore ..	.. Jagulgachi	do ..	.. ditto.
790	„ Panchanan ..	Rajarhat ..	.. Bistupur, P O Rajarhat-Bistupur ..	do ..	.. Landholder.
791	„ Panchanan ..	Beliaghata ..	.. 103, Beliaghata Main Road ..	do ..	.. Straw Merchant.
792	„ Panchanan ..	Tollyganj B P ..	.. Kamduary, P O Garia ..	do ..	.. Clerk.
793	„ Parbati Charan ..	Budge-Budge ..	.. Kalipore	do ..	.. Landholder.
794	„ Paresh Nath ..	Haroa ..	.. Salipore	do ..	.. ditto.
795	„ Pashupati ..	Joynagore ..	.. Joynagore, Mitrapara ..	do ..	.. Overseer, Joynagore Municipality.
796(S)	„ Phani Bhusan ..	Beliaghata ..	.. 28-A, Raja Dinendra Narain Street	do ..	.. Clerk, Administrator-General's Office, Calcutta.
797	„ Phanindra Nath ..	Budge-Budge ..	.. Telari	do ..	.. Landholder.

798	„	Paresh Nath	..	Habra	..	..	Vill & P O Rajibpur	..	..	do	..	.. Landholder and President of Rajibpore Union Board.
799	„	Prafulla Kumar	..	Sonarpore	..	..	Harinavi	..	..	do	..	.. Zamindar
800	„	Prafulla Kumar	..	Mathurapore	..	..	Mathurapore	..	..	do	..	.. Landholder.
801(S)	„	Pramatha Nath, BA, BT		Tollygunge	..	..	Mahajanputti, Tollygunge	..		do	..	.. Teacher, Hare School.
802	„	Pramatha Nath	..	Habra	..	..	Hatnawpara	..	..	do	..	.. Landholder.
803	„	Prasad Chandra	..	Amdanga	..	..	Amdanga Bodai	..	..	do	..	.. Landholder and President, U B.
804	„	Prio Nath	..	Naihati	..	..	Chotabudhuria	..	..	do	..	.. Landholder.
805	„	Promothesh Chandra	..	Bhowanipore	..	..	1-1, Mahesh Chaudhury Lane	..		do	..	.. Watering Supervisor, Calcutta Corporation.
806	„	Probodh Chandra	..	Basirhat	..	..	Sikra, Kulingram	..	..	do	..	.. Landholder.
807(S)	„	Pulin Behari	..	Tollygunge	..	..	15, Prince Anwar Saha Road	.		do	..	.. Contractor.
808	„	Purna Chandra	..	Nowpara	..	..	Ishapore Rifle Factory	..	.	do	..	.. Office Ishapore Rifle Factory.
809	„	Rajani Kanta	..	Magrahat	..	..	Maitirhat, P O Magrahat	..		do	..	.. Service-holder.
810	„	Rajendra Nath	..	Beliaghata	..	..	94C, Garpar Road	..	..	do	..	.. Clerk in a merchant office.
811	„	Rishi Kesh	..	Bistupur	..	..	Makhalia	..	..	do	..	.. Landholder and Merchant.
812	„	Ramani Mohan	..	Kulpi	..	..	Kulpi	..	..	do	..	.. Naib, Zamindary Katchary, Kulpi.
813(S)	„	Romesh Chandra	..	Basirhat	..	..	Itenda	..	..	do	..	.. Zamindar.
814	„	Sailendra Nath	..	Hasnabad	..	..	Saidpur	..	..	do	..	.. Talukdar.
815	„	Sarada Prosad	..	Diamond Harbour		..	Narbari, P O Diamond Harbour	..		do	..	.. Pensioner.

Serial No.	Name.	Thana.	Place of abode—Village, road or street.	Nationality.	Quality or occupation.
	G				
816	Ghosh, Sarat Chandra	Magrahat	Benipur, P O Magrahat	Hindu	School Master.
817	„ Sarat Chandra, MSc	Tollygunge B P	Kasba	do	Manager, Bengal Soap Works.
818	„ Sasi Bhusan	Bistupur	Sukdevpur	do	Clerk, Judges' Court, Alipore.
819	„ Satish Prosad	Khardah	Bosepara, Khardah	do	Contractor, Ex-Military Officer.
820	„ Satish Chandra	Budge-Budge	Budge-Budge	do	Head Clerk, Cheviot Jute Mill, Chitraganj.
821	„ Satish Chandra	Habra	Rajibpur	do	Head Clerk, Coal Manager's Office, E I Ry Co, Calcutta.
822	„ Satya Ranjan	Baranagore	Belgharia	do	Head Assistant, Office of Superintending Engineer, Southern Circle, Calcutta.
823	„ Shib Chandra	Joynagore	Mazilpur	do	Landholder.
824	„ Shama Charan	Falta	Satal	do	ditto.
825	„ Sidheswar	Habra	Prithiba P O	do	ditto.
826	„ Subodh Krishna, BA	Manicktala	16B, Munshi Kalimuddin Lane	do	Clerk, Accounts Department, Calcutta Corporation.
827(S)	„ Surendra Kumar	ditto	120, Manicktala Main Road	do	Zamindar.
828	„ Surendra Nath	Bistupur	Joychandipur, P O Bistupur	do	Contractor and landholder. President, Joychandipur U B.
829	„ Surendra Nath	Beliaghata	72, Charakdanga Road	do	Landholder.
830(S)	„ Surendra Nath	Jagatdal	Mulajore, P O Shamnagore	do	Contractor.

831	„	Tarak Chandra	..	Budge-Budge	..	..	Feeder Road, Budge-Budge	..	do	.. Service-holder, Bengal Telephone Co.
832	„	Tajendra Nath	..	Basirhat	..	..	Bagundi	..	do	.. .. Landholder and President, U B.
833	„	Tin Couri ..	..	Entally	..	..	31-5, Ananda Gopal Palit Road	..	do	.. .. Coal merchant.
834	„	Upendra Nath	..	Naihati	..	..	Mitrapara	..	do	.. .. Land-owner.
835	„	Upendra Nath	..	Magrahat	..	..	Shapmara	..	do	.. .. Landholder.
836	„	Chaudhury, Nalin Ch.		Naihati	..	..	Mittrapara ..	..	do	.. .. ditto.
837	„	(Koley) Satish Chandra		Habra	..	..	Nawpara	..	do	.. .. ditto.
838	Ghosal,	Atal Behari	..	Baranagore	..	..	Belgharia	..	do	.. .. Assistant Cashier, McLeod & Co.
839	„	Bishnu Charan	..	Baraset	..	..	Barbaria, P O Baraset	..	do	.. .. Clerk, Sub-Registry Office, Baraset.
840	„	Bibhuti Bhusan	..	Tollygunge	..	..	Garia, P O Garia ..	..	do	.. .. Clerk.
841(S)	„	Jogendra Nath	..	Baranagore	..	..	Ariadah	..	do	.. .. Retired clerk.
842	„	Jyotish Chandra	..	Jagatdal	..	..	Thakurpara, Bhatpara	..	do	.. .. Clerk, Merchant's Office.
843	„	Krishna Chandra	..	Khardah	..	..	Panihati	..	do	.. .. Teacher, Panihati T N H E School.
844(S)	„	(Kumar) Satya Mohan		Ekbalpur	..	..	49-2, Circular Garden Reach Road, Bhukailash Garh.		do	.. .. Zamindar.
845(S)	„	Nripendra Nath	..	Beliaghata	..	..	14-2-1, Bahir Mirzapur Road	..	do	.. .. Broker, Andrew Yule & Co.
846	„	Panchu Gopal	..	Bhowanipore	..	..	41, Chakraberia Road North	..	do	.. .. Professor, Howrah College.
847	„	Prokash Chandra	..	Beliaghata	..	..	4, Gauri Sankar Ghosal Lane	..	do	.. .. Teacher.

Serial No.	Name.	Thana.	Place of abode—Village, road or street.	Nationality.	Quality or occupation.
	G				
848	Ghosal, Sachindra Nath	Falta	Falta	Hindu	Landholder.
849(S)	,, Satish Chandra	Khardah	Panihati	do	Teacher, T N H E School.
850	,, Satya Charan	Jagatdal	Madrail	do	Teacher, Naihati Mahendra School.
851	,, Siva Prosad, BA	Baranagore	Belgharia	do	Teacher.
852	Gholam Rasul	Sharupnagor	Sharupdaha	Muhammadan	2nd Master, Hakimpur M E School.
853	Giri, Naro Narayan	Sagore	Iswaripore	Hindu	Landholder.
854	Golam Sarwar Ahmed	Deganga	Kalsur	Muhammadan	ditto.
855	Golder Abdul Khaleque	Sandeshkhali	Bamnia	do	ditto.
856(S)	Goswami, Khirode Mohon, BA	Bhowanipore	43, Lansdowne Road	Hindu	Manager, Zamindari Estate.
857	Guha, Devendra Nath	Bhangore	Kharabuba	do	Zamindari Naib.
858(S)	,, Rajendra Nath, BA	Tollyganj	39-2, Monoharpukur Road	do	Assistant Collector, Calcutta Corporation.

859	„	Prafulla Chandra	..	ditto	..	Jadabpur Colony	..	do	.. Retired Subordinate Judge, Bengal.
860(S)	Gupta.	R K	..	Garden Reach	..	42, Garden Reach Road	..	Indian	.. Head Assistant, Kesoram Cotton Mills, Garden Reach.
861(S)	„	Gopi Nath	..	Bhowanipore	..	4/1, Mohesh Chowdhury Lane	..	Hindu	.. Superintendent, Zamindary Kutchery.
862	„	Rebati Mohan	..	Barrackpore	..	Manirampur	..	do	.. Inspector, Waterworks, Palta.
863	„	Prokash Chandra	..	Bhowanipore	..	40-6, Chaulpati Road	..	do	.. Zamindar.
864	„	Suresh Chandra	..	Budge-Budge	..	Budge-Budge	..	do	.. Head Clerk, Asiatic Petroleum Company, Budge-Budge.
				H					
865	Hafiz,	Abdul Hamid	..	Moheshtola	..	Chandannagore, P O Moheshtola	..	Muhammadan	.. Trader and Landholder.
866	Haldar,	Atul Chandra	..	Ballygunj Beliaghata	..	60, Hara Mohan, Ghosh Lane, Calcutta.		Hindu	.. Head Assistant to Electric Inspector to the Government of Bengal.
867	„	Bihari Lal	..	Budge-Budge	..	Haldarpara, Budge-Budge	..	do	.. Assistant Store-keeper, Asiatic Petroleum Company's Depôt at Budge-Budge.
868(S)	„	Hara Lal	..	ditto	..	ditto	..	do	.. Landholder and Chairman of Budge-Budge Municipality.
869(S)	„	Hara Mohan	..	Hashnabad	..	Dulduli	..	do	.. Head Master of Dulduli M E School.
870	„	Hara Nath	..	Diamond Harbour	..	Abdulpur, P O Diamond Harbour		do	.. Teacher.
871	„	Hari Das	..	Jagatdal	..	Bhatpara	..	do	.. Zamindar.

Serial No.	Name.	Thana.	Place of abode—Village, road or street.	Nationality.	Quality or occupation.
	H				
872	Haldar, Jadu Nath ..	Hashnabad ..	.. Basanhati ..	.. Hindu ..	.. Retired School Master.
873	„ Kartic Chandra ..	Behala ..	.. North Haldarpara, Behala P O ..	do ..	.. Contractor.
874	„ Kshiti Bhusan ..	Diamond Harbour	.. Harindanga ..	.. do ..	.. Landowner.
875 (S)	„ N K	Barrackpore ..	.. Sadarbazar ..	.. do ..	.. Head Master, Devi Prasad H E School.
876	„ Rakhal Nath ..	Kulpi ..	.. Raipur-Dyarampur ..	.. do ..	.. Landholder.
877	„ Surja Kumar ..	Canning ..	.. Tengrakhali ..	.. Christian	.. Merchant.
878	Hakim Hafez Ahmad Said ..	Metiabruz ..	.. P O Garden Reach ..	.. Muhammadan	.. Unani Hakim.
879	Haji Muhammad Akbar ..	Entally ..	.. 13, Ismail Street ..	.. do ..	.. Landholder.
880	„ Muhammad Yusuf ..	Beniapukur ..	.. 26-1, Noor Ali Lane ..	.. do ..	.. ditto.
881	„ Khoda Bux Gharami ..	Joynagore ..	.. Meragunj	.. do ..	.. President-Panchayat, Meragunj Union.
882	Hazra, Manmath Nath, BA ..	Bistupur ..	.. Bistupur	.. Hindu ..	.. Landholder.
883	„ Nani Lal	Watgunge ..	.. 121, Circular Garden Reach Road	do ..	.. Merchant.
884	„ Kanai Lal ..	ditto ..	.. 3, Gopal Doctor Road ..	do ..	.. Landlord.
885	Hore, Apurba Kumar ..	Diamond Harbour	.. Diamond Harbour ..	.. do ..	.. Clerk, D T S Office, E B Railway, Sealdah.

886	Hossein, A S M ..	.. Bhowanipore ..	.. 85, Harish Chatterjee Street	.. Muhammadan	..	Zamindar.
887(S)	Huq, Shamsul ..	.. Ballygunge ..	.. 81, Bondel Road ..	.. do ..	..	Government pensioner.
888(S)	„ Zahural ..	.. Basirhat ..	.. Basirhat ..	.. do ..	..	Landholder.
889	„ Zahural ..	Watganj ..	.. 14B, Watganj Street ..	.. do ..	..	Broker.
890(S)	Hyder Kamruddin ..	Beliaghata ..	.. 1, Kaiser Street ..	.. do ..	..	Honorary Magistrate.
	I					
891	Iyenger, A P I ..	.. Garden Reach ..	.. 42, Garden Reach Road	.. Indian ..	..	Head Clerk, Kesoram Cotton Mills, Garden Reach.
892	Ishaque, S M ..	.. Beliaghata ..	.. 2, Gas Street ..	.. Muhammadan	..	Registered Building and Road Contractor, Calcutta Corporation, and Personal Assistant to the Secretary of the Calcutta Majliss.
	J					
893	Jana, Anath Bandhu	.. Hasnabad ..	.. Mahamudpur ..	.. Hindu ..	..	Landholder.
894	„ Jamadar Kayemali	.. Diamond Harbour	.. Chandnagore ..	.. Muhammadan	..	Landowner.
895	„ Dharanidhar	.. Sagore ..	.. Fulbari	.. Hindu ..	..	Landholder.
896	„ Kishori Lal, BA	.. Bistupur ..	.. Mamudpur ..	.. do ..	..	ditto.
897(S)	„ Satish Chandra	.. Falta ..	.. Belsingh	.. do ..	..	Head Master, Mathura M E School.
898(S)	„ Priya Nath, BA	.. Hasnabad ..	.. Bishpur	.. do ..	..	President-Panchayat.
899	„ Kishori Lal, BA	.. Bistupur ..	.. Mamudpur	.. do ..	..	Landholder.
900	„ Nilmoni	.. Sagore	.. Kashtola	.. do ..	..	ditto.

Serial No.	Name.	Thana.	Place of abode—Village, road or street.	Nationality.	Quality or occupation.
	K				
901	Kabiratna, Debabrata ..	Jagatdal ..	.. Bhatpara	Hindu ..	.. Head Pandit, Kamarhati H E School, Bhatpara, P-S Jagatdal.
902	Kaviraj, Gour Das ..	Dum-Dum ..	.. Dum Dum	do ..	.. Teacher, Dum-Dum H E School.
903	Kabyatirtha, Narayan Chandra	Mathurapur ..	.. Mathurapur	do ..	.. Landholder.
904	Kantal, Bibhuti Bhusan, MA ..	Bistupur ..	.. Jhikarbaria	do ..	.. Professor, Ripon College.
905	Kanjilal, Probodh Chandra, MA	Shampukur ..	.. Saraeswati Institution, Shambazar	do ..	.. Head Master, Park Institution, Shambazar.
906	Kapasi, Gosta Behari ..	Baduria ..	.. Jadurati	do ..	.. Merchant.
907	Kar, Akshay Kumar ..	Tollygunge ..	.. 52, Russa Road, South ..	do ..	.. Proprietor of a press and house-owner.
908	,, Haridas	Khardah ..	.. Bilkanda	do ..	.. Assistant Head Master, Mitra Institution, Calcutta.
909	,, Narain Das	Dum-Dum ..	.. Nagerbazar	do ..	.. Landholder.
910	Karmakar, Dwijendra Lall, BSC	Beliaghata ..	.. 23, Narikeldanga Main Road ..	do ..	.. Businessman.
911	Karamat Ali ..	Bhangore ..	.. Vill Banshahar, P O Bodra ..	Muhammadan	.. Member, Bodra Union Board and Clerk, Calcutta Corporation.
912	Kasem Abu Muhammad ..	Mohestala ..	.. Aima Nischintapur	do ..	.. Landholder.
913	Koyal, Sris Chandra ..	Mathurapur ..	.. Mathurapur	Hindu ..	.. ditto.
914	,, Kalikumar ..	Canning ..	.. Tengrakhali	do ..	.. Zamindar and Landholder.
915	,, Upendra Nath ..	ditto ..	.. ditto	do ..	.. ditto.

916	Khan, Ashrafuddin	Watgunge	5-1B, Mominpore Road	Muhammadan	Clerk, Political Pensions Office.
917	„ Azizul Nabi	ditto	20, Rajab Ali Lane, P-S Watgunge.	do	Landlord.
918	„ Kayam Ali	Kulpi	Kasinagore	do	Landholder.
919	„ Khabir Ahmed	Barrackpore	Sadarbazar	do	Mechanic.
920	„ Wajed Ali	Baruipur	Sherpur	do	Landlord.
921	„ Mohammad Delwar Hussain	Canning	Basanti	do	Landholder.
922(S)	„ Mohammad Jalaluddin	Garden Reach	Hata Rahanud Dowla, off Garden Reach Road.	do	Independent gentleman.
923	„ Mohammad Wajuddin	Canning	Kalidanga	do	Landholder.
924	„ Momtaz Ahmed	Maniktala	55, Simla Road	do	Manager of a business firm (Attar Shop).
925	„ Sekender	Saugore	Bamankhali, P O Moriganga	do	Landholder.
926	Khara, Upendra Nath	Metiabruz	Nadial, Badartola	Hindu	Employee, Clive Jute Mill.
927	Kasyapi, Jahar Lal	ditto	Dhopapara, Bartala	do	Zamindar and money-lender
928(S)	Kazi M Anwarul Huq	Baraset	Kazipara	Muhammadan	P W D Office, Bengal Secretariat.
929	„ Asraf Jaman	Deganga	Bhaslia, P O Deganga	do	Landholder.
930	„ Golam Arab	Naihati	Bara Budhria	do	Zamindar and money-lender.
931	„ M Golam Mustafa	Kulpi	Chunfuli	do	Landholder.
932	„ Neamat Ali	Tollygunge	Mosar	do	Independent gentleman.

Serial No.	Name.	Thana.	Place of abode—Village, road or street.	Nationality.	Quality or occupation.
	K				
933(S)	Kazi, Nurul Huda ..	Titagarh ..	.. Anderson Road	Muhamadan ..	.. Marriage Registrar.
934	„ Maulvi Mohd Khairul Anam	Beliaghata ..	.. 1, Kaiser Street	do ..	.. Head Maulvi, Hare School.
935	„ Shamsuddoha ..	Beniapukur ..	.. 67, Beniapukur Road	do ..	.. Zamindar.
936(S)	„ M Md Abdul Kader ..	Baraset ..	.. Kazipara	do ..	.. Employee in the Office of the Controller of Currency, India, Calcutta.
937(S)	„ Syed Golam Mohiuddin	Alipore ..	.. 6, Mohes Chandra Dutt Lane ..	do ..	.. Head Assistant, Political Pensions Office.
938	Khan Sahib Maulvi Wachel Molla	Meshtola ..	.. Santoshpur, 8, Dharamtola Street	do ..	.. Zamindar and Member of Ganipore Union Board and Court.
939	Khandker, Ahamed Ali ..	Sarupnagar ..	.. Chitore	do ..	.. Landlord, Member, Union Board.
940	Khan Mahammad Makim ..	Diamond Harbour	.. Vill Madhur, P O Sarisa ..	do ..	.. Landholder and Collecting Panchayet, Union No IV.
941	Khara, Kanta ..	Basirhat ..	.. Harishpore	Hindu ..	.. Landholder.
942(S)	Koley, Panna Lal, MC ..	Cossipore ..	.. Uttarpara Lane	do ..	.. Independent gentleman.
943(S)	Kuar, Satish Chandra, BA ..	Bhowanipur ..	.. 18, Iswar Ganguly Lane ..	do ..	.. Zamindar.
944(S)	Kundu, Bistupada ..	Entally ..	.. 5, South Road	do ..	.. Timber Merchant.
	L				
945(S)	Lall Manilal Msc ..	Dum Dum ..	.. Kanchrapara Road, Dum Dum ..	Hindu ..	.. Landholder.
946	[illegible]kar, Ram Gopal ..	Tollygunge ..	.. Russa	do ..	.. ditto.
947	„ Sashi Bhushan ..	Kakdwip ..	.. Beharinagar, Lot No 2, P O Kakdwip	do ..	.. ditto.

948	,,,	Mahbubar M	..	Baduria	..	..	Aturia	..	..	.. Muhammadan	.. Landholder.
949(S)	Maitra,	Girish Chandra	..	Basirhat	..	..	Mirzapur	..	..	.. Hindu	.. ditto.
950	,,	Hrishikesh,	..	Barrackpore	..	..	Sadarbazar	..	..	do	.. Teacher, Debi Prasad High School.
951(S)	,,	Kanti Chandra	..	Basirhat	..	..	Mirzapur	..	..	do	.. Landholder.
952	,,	Keshab Chandra	..	Hasnabad	..	..	Bhowanipore	..	..	do	.. Superintendent, Sir Ramesh Ch Mitter Estate.
953	,,	Mati Lal ..	..	Baranagar	..	..	Bon-Hooghly	..	..	do	.. Landholder.
954	,,	Manmatha Nath	..	Baranagore	..	..	Victoria Road, Alambazar	..	..	do	.. Imperial Bank, Calcutta.
955	Maity,	Hore Krishna	..	Kakdwip	..	..	Gobindpur	..	..	do	.. Landholder.
956	,,	Murari Mohan	..	Saugore	..	..	Kayalapara	..	..	do	.. Landholder and President-Panchayat.
957	,,	Nikunja ..	..	ditto	..	..	Mandirtala, P O Mandirtala	..	..	do	.. Landholder.
958	,,	Surendra Nath	..	Kulpi	..	..	Nischintapore	..	..	do	.. ditto.
959	Mal,	Bipin Bihari ..	..	Tollygunge	..	..	Kasba, P O Dhakuria	..	..	do	.. ditto.
960	Mallik,	Abubakar	..	Amdanga	..	..	Sonadanga	..	..	Muhammadan	.. ditto.
961(S)	,,	Bijoy Krishna	..	Jagatdal	..	..	Kawgachi	..	..	Hindu	.. Cloth Merchant.
962	,,	Dhirendra Nath	..	Falta	..	..	Shamsundarpur	..	..	do	.. Landholder.
963	,,	Jadu Nath	..	ditto	..	..	27-2, Harish Chatterjee Street	..	..	do	.. Merchant.
964	,,	Nil Ratan	..	Bhowanipore	..	..	55-1, Bakul Bagan Road, Bhowanipore.			do	.. Assistant, Messrs Newman & Co.

Serial No.	Name.	Thana.	Place of abode—Village, road or street.	Nationality.	Quality or occupation.
	M				
965(S)	Mallik, Panchu Gopal	Bijpore	Kanchrapara	Hindu	Head Master, Harnet H E School.
966	„ Panchu Gopal	Bhowanipore	1, Balaram Bose 2nd Lane	do	Retired Record-keeper, Inspector-General of Prisons' Office.
967	„ Samser	Diamond Harbour	Haridevpur, P O Sarisa	Muhammadan	Landholder.
968	„ M Wazir Ali	ditto	Haridebpur	do	ditto.
969	Mandal, Aghore	Canning	Kumarkhali	Hindu	ditto.
970	„ Abdul Aziz Ahmed	Baruipur	Puri	Muhammadan	ditto.
971	„ Abhoy Charan	Protapnagore	Raipur	Hindu	ditto.
972	„ Asgar Ali	Khardah	Panihati	Muhammadan	Contractor.
973	„ Annada Prasad	Falta	Benipore, P O Shaipore	Hindu	Govt Pensioner.
974	„ Rajaulla	Sarupnagar	Balti	Muhammadan	Landholder and President Panchayat.
975	„ Akhoy Kumar	Deganga	Deolia, P O Hadipur	Hindu	Landholder.
976	„ Ashutosh	Budge-Budge	Bawali	do	President-Panchayat of Union No 1.
977	„ Bamandas	Baranagore	Victoria H E School	do	6th Master.
978	„ Bhabendra Nath	Falta	Fatehpur, P O Shaipur	do	President Panchayet, Tenure-holder and Merchant.
979	„ Bholanath	Tollygunge	99, Tollygunge Road	do	Zamindar, Merchant.
980(S)	„ Bhupesh Chandra	Falta	Keotkhanda	do	Landholder.
981	„ Bibhuti Bhusan	Kulpi	Ramkrishnapur	do	Headmaster, Ramkrishnapur-M E School.
982	„ Hamijuddin	Sarupnagar	Uttarkachdai, P O Khatura	Muhammadan	Landholder.

983	„	Bihari Lal	..	Baduria	..	..	Baduria Bazar	..	.. Hindu ..	.. Merchant—dealer in jute, sugar, etc.
984	„	Binod Bihari	..	Basirhat	..	..	Nadia, P O Dhanyakuria	..	do ..	.. Landholder, Merchant and Proprietor of Rice Mill.
985	„	Banku Bihari	..	Maniktala	..	..	13, Moti Mitra Lane	..	.. do ..	.. Jute-broker.
986	Munshi	Dilwar Khan	..	Canning	..	..	Basanti P O	..	.. Muhammadan	.. Landholder.
987	„	Forhan	..	Cossipore	..	..	66, South Sinthee Road	..	do	.. Contractor and Landholder.
988	Munshi	Moharaddin Molla	..	Canning	..	..	Iswaripore, P O Bodra	..	do ..	.. Panchayat, Serangabad Union.
989	Mondal,	Hora Prosad	..	Diamond Harbour	..		Rainagar	..	.. Hindu ..	.. Landholder.
990	„	Jaharali	..	Hasnabad	..	..	Dholetukri	..	.. Muhammadan	.. Landlord and stamp vendor.
991	„	Jamini Kanta	..	Diamond Harbour	..		Nowsha, P O Sarisa	..	.. Hindu ..	.. Landholder.
992	„	Jatindra Nath	..	Budge-Budge	..	..	Bawali	..	.. do ..	.. Zamindar.
993	„	Jatindra Nath	..	Deganga	..	..	Kalsur, P O Kalsur	..	.. do ..	.. Landholder.
994	„	Jogesh Chandra	..	Hasnabad	..	..	Sahibkhali, P O Ratanpore, 24-Parganas.		do ..	.. Head Pandit, Charalkhali Free Primary School.
995	„	Jugal Charan, BA	..	Tollygunge	..	..	55, Tollygunge Road	..	.. do ..	.. Zamindar.
996	„	Judhisthir	..	Sagar	..	..	Harin Bari	..	.. do ..	.. Collecting Panchayet and Landholder.
997	„	Kamal Krishna	..	Watgunj	..	..	8, Ram Kamal Mukherjee's Street	..	do ..	.. ditto.
998	„	Kasimuddin	..	Sampnagore	..	..	Banglani ..	..	.. Muhammadan	.. Gantidar.
999	„	Keshab Chandra	..	Protapnagar	..	..	Raipur	..	.. Hindu ..	.. Landholder.

Serial No.	Name.	Thana.	Place of abode—Village, road or street.	Nationality.	Quality or occupation.
	M				
1000	Mondal, Kumud Krishna ..	Budge-Budge ..	.. Bawali	Hindu ..	.. Zamindar.
1001	„ Lalit Mohan ..	.... ..	.. Roman Catholic Mission House, Basaali P O, 24-Parganas.	do ..	.. School Master.
1002	„ Lalit Mohan, BA ..	Bhangore ..	.. Raghunathpur	do ..	.. Teacher, Bhangore School.
1003	„ Madhab ..	Canning ..	.. Godakhali, P O Gochhapa ..	do ..	.. Landholder and Merchant.
1004	„ Moni Mohan ..	Budge-Budge ..	.. Peali, P O Burul	do ..	.. Head Master, Budge-Budge Manual Free Primary School.
1005	„ Moozibar Rahaman ..	Amdanga ..	.. Shasipur	Muhammadan ..	.. Landholder.
1006	„ Munshi Abdul Bari ..	Habra ..	.. Kadambagachi	do ..	.. Teacher, Rajibpur A V School.
1007	„ Munshi Kalimuddin ..	Baraset ..	.. Ramkristopur	do ..	.. Landholder.
1008	Munshi, Rahimuddin Dewan ..	Bhangore ..	.. Koachpukur, P O Bhangore ..	do ..	.. ditto.
1009	Mandal, Nilanjan ..	Behala ..	.. Thakurpukur Mission, P O Barisa	Christian	.. School Master of St. Barnabus H E School, Kidderpore, No. 1, Dent Mission Road.
1010	„ Nitaipada ..	....	.. Khari-Bahir Kanchaly, P O Kashinagore.	....	.. Landholder.
1011(S)	„ Lalit Mohan, BL ..	Bhangore ..	.. Bhangore	Hindu ..	.. Assistant Head Master, Bhangore H E School, P O Bhangore.
1012	„ Nando Lall ..	Joynagore ..	.. Kasimpur	do ..	.. Landholder.
1013	„ Prabas Chandra, BA ..	Budge-Budge ..	.. Bawali	do ..	.. Zamindar.
1014(S)	„ Pulin Behari ..	Diamond Harbour	.. Bardrone	do ..	.. Assistant Teacher, Diamond Harbour H E School.

1015	„	Purna Sashi	..	Alipore	..	..	33-B, Jaynuddi Mistri Lane	..	do	..	.. Merchant.
1016	„	Rabindra Nath, BA	..	Budge-Budge	..	..	Bawali	..	do	..	.. Zamindar.
1017	„	Radhika Prasad	..	ditto	..	..	Kachbagan, P O Bawali	..	do	..	.. ditto.
1018	„	Rajanikânta	..	Kulpi	..	..	Sidheswarpur, P O Kulpi	..	do	..	.. Inspecting Pandit of Kulpi.
1019(S)	„	Rajendra Nath	..	Bhowanipore	..	..	91-B, Kalighat Road, P O Kalighat		do	..	.. Landholder, President and Service-holder. (Accountant, District Engineer's Office, district 24-Parganas.)
1020	„	Rakhal Krishna	..	Baruipore	..	..	Kotalpur, P O Baruipur	..	do	..	.. Zamindar.
1021(S)	„	Rash Bihari	..	Deganga	..	..	Kalsoor, P O Kalsoor	..	do	..	.. Landholder and Honorary Magistrate, Baraset.
1022	„	Ramjan Ali	..	ditto	..	..	Basudebpur	..	Muhammadan	..	Landholder.
1023	„	Rasikchandra	..	Joynagore	..	..	Beliadenganagore	..	Hindu	..	.. President Panchayet and Landholder.
1024	„	Sachindra Nath	..	Hasnabad	..	..	Barabank-Sahebkhali, P O Hingulganj.		do	..	.. Landholder.
1025	„	Satis Chandra	..	Baruipur	..	..	Kotalpur	..	do	..	.. Landholder and President.
1026(S)	„	Satis Chandra, BA	..	Kulpi	..	..	Gabberia H E School, P O Ghatiswara.		do	..	.. Assistant Teacher, Gabberia H E School.
1027	„	Sasibhusan	..	Deganga	..	..	Kalsur	..	do	..	.. Landholder.
1028	„	Satish Chandra, BA	..	Sarupnagore	..	..	Nirman, P O Sarapole	..	do	..	.. School Master.
1029	„	Sita Nath	..	Canning	..	..	Village Tangrakhali, P O Canning		do	..	.. Merchant.
1030	„	Sobhan Box	..	Magrahat	..	..	Ramchandrapur, P O Rangilabad		Muhammadan	..	School Master.
1031	„	Surendra Nath	..	Deganga	..	..	Mirzapur	..	Hindu	..	.. ditto.
1032	„	Tarapada	..	Dum-Dum	..	..	1, Bagjala Road	..	do	..	.. Jute Merchant.

Serial No.	Name.	Thana.	Place of abode—Village, road or street.	Nationality.	Quality or occupation.
	M				
1033	Mandal, Upendra Krishna, BA	Budge-Budge ..	.. Kalipur, P O Achipur	.. Hindu ..	.. Teacher, Kalipur H E School.
1034	Manna, Bishnupado ..	Magrahat ..	.. Multi ..	.. do ..	.. Landholder.
1035	„ Prafulla Chandra ..	Budge-Budge ..	.. South Bawali ..	.. do ..	.. Landholder (under-graduate).
1036	Marik, Prosad Das ..	Baruipur ..	.. Baruipur ..	.. do ..	.. Clerk, Chief Engineer's Office, 3, Koilaghat Street, Calcutta.
1037(S)	„ Ganendra Nath, BA ..	Magrahat ..	.. Multi ..	.. do ..	.. Clerk, Coaching Office, E B Railway.
1038(S)	„ Sashi Bhusan, MA ..	do ..	.. do	.. do ..	.. Landholder and Assistant Teacher, Multi, P S Institution.
1039	Maschatak, Birendra Nath ..	Baraset ..	.. Kotra, P O Baraset..	.. do ..	.. Landholder.
1040	Matilal, Sudhin Chandra ..	Behala ..	.. Barisa ..	.. do ..	.. Assistant, Health Department, Calcutta Corporation.
1041	Maulvi Abdus Samad Qamor Siddique, BA	Entally ..	.. 1, Chatu Babu Lane	.. Muhammadan	.. Teacher, Islamia High School.
1042(S)	„ Ahmadullah ..	Garden Reach ..	.. Paharpur Road ..	. do ..	.. Head Master, C F P School, Rajabagan.
1043	„ Din Mohammad ..	Baduria ..	.. Magurali	.. do ..	.. Teacher.
1044	„ Efazuddin ..	Garden Reach ..	.. Paharpur Road ..	.. do ..	.. Head Master, C F P School, Dhobapara, Metiaburuz.

1045	„	Kazemuddin, BA, BT ..	Bhangore ..	..	Bhangore ..	..	..	do ..	..	Head Master, Bhangore H E School.
1046	„	Muhammad Ejaharul Haque.	Rajerhat ..	..	Hatiara ..	..	..	do ..	..	School Master, Kadihati School.
1047	„	Kazi Abdus Samad, BA	Maniktala ..	..	19, Bagmari Road ..	..	..	do ..	..	Assistant, Bengal Secretariat, Agriculture and Industries.
1048	„	Moslehuddin Ahmed	Watgunj ..	..	5, Ekbalpore Lane ..	..	..	do ..	..	Clerk, B N Ry, Catering Department, Garden Reach.
1049	„	Matiar Rahman ..	Protapnagar ..	..	Chakberia, P O Protapnagar ..		..	do ..	..	Zamindar, Naib Kazi of Baruipore Muhammadan Marriage Registry Office.
1050(S)	„	Muhammad Musa ..	Basirhat ..	..	Nehalpur, P O Dhanyakuria ..		..	do ..	..	Vice-President, Dhanyakuria U B.
1051(S)	„	Mahammad Sufi ..	Maniktala ..	..	20, Kalimuddin Lane ..		..	do ..	..	Teacher, Calcutta Madrasah.
1052	„	Mahior Rohman ..	Protapnagar ..	..	Chackbaria ..		..	do ..	..	Landholder, Naib Kazi of Baruipur Muhammadan Marriage Registry Office.
1053	„	Muhammad Ishaque	Baduria ..	..	Palta, P O Punra ..		..	do ..	..	President, Bajitpur U B.
1054	„	Maula Buksh ..	Mudi Deyganga	..	Rajilberia ..	..	..	do ..	..	Landholder and President, U B No. 3.
1055	„	Mahammad Mostem ..	Titagarh ..	..	Titagarh ..	..	..	do ..	..	Landholder.
1056(S)	„	Muhammad Eshaque	Garden Reach ..	..	47, Ram Nagore Lane		..	do ..	..	Assistant Teacher, Metiabruz H E School.
1057	„	Nayan Ali Mondol ..	Sarupnagar ..	..	Syed Kati, P O Sonapole		..	do ..	..	Landholder.
1058(S)	„	Nur Ahmad ..	Protapnagar ..	..	Chakberia, P O Protapnagar		..	do ..	..	Deputy Superintendent, R Section, Appellate Side, High Court.
1059	„	S M Golam Bari ..	Baliaghata ..	..	58-6, Narkeldanga North Road		..	do ..	..	Teacher, Narkeldanga George High School.

erial No.	Name.	Thana.	Place of abode—Village, road or street.	Nationality.	Quality or occupation.
	M				
1060	Maulvi Abdul Nazab ..	Baduria ..	.. Nagarpur, P O Punra ..	Muhammadan ..	Head Maulvi, Nagarpur Junior Madrasah.
1061(S)	„ Abdul Majid ..	Garden Reach ..	.. Paharpur Road, c-o Golam Hossain Ostagar	do ..	.. Teacher, Mudiali M E School.
1062	„ Jehan Ali, MA ..	Canning ..	.. Basanti P O	do ..	.. Landholder.
1063	„ Abdur Rashid ..	Protapnagar ..	.. Chakberia, P O Protapnagar ..	do ..	.. Government pensioner.
1064	„ Abdur Rub ..	Amdanga ..	.. Urala	do ..	.. Landholder.
1065(S)	„ A T M Moazzum ..	Basirhat ..	.. Basirhat	do ..	.. Honorary Magistrate.
1066	„ Bazlar Rahman ..	Baduria ..	.. Baduria	do ..	.. Head Maulvi, Punrah H E School, P S Baduria.
1067(S)	„ Bazlar Rahaman ..	Bhowanipore ..	.. 8-1, Sankaripara Road ..	do ..	.. Zamindar.
1068(S)	„ Syed Mokarram Ali, BA, BT	Basirhat ..	.. Basirhat	do ..	.. S I of Schools, Diamond Harbour.
1069	„ Syed Mushfiqus Salihin Khan Bahadur	Tittagar ..	.. Tittagar Syed Abad	do ..	.. Retired Registrar of Assurance.
1070	„ Karimar Rahman ..	Basirhat ..	.. Nehalpur, P O Dhanyakuria ..	do ..	.. Landlord.
1071(S)	„ Kazi Abdus Samad, BA	Maniktola ..	.. Bagmari Road	do ..	.. Assistant, Bengal Secretariat, Agriculture and Industry.
1072(S)	„ Kafilur Rahim ..	Garden Reach ..	.. Garden Reach Road, Atabagh ..	do ..	.. Head Master, Garden Reach High School.
1073(S)	„ Syed Korban Ali ..	Basirhat ..	.. Basirhat	do ..	.. Head Master, Basirhat Junior Madrasah.
1074(S)	„ Saiyid Mukhshed Ali Malique, MLC	Garden Reach	.. Talpukur	do ..	.. Landholder and Municipal Commissioner.

1075	„	M Kala Chand ..	Khardah ..	..	Ghola ..	..	..	do ..	..	Chairman, Panihati Municipality.
1076	„	Sakhawatullah Mondal	Basirhat ..	..	Banasjhari, P O Dandirhat ..		..	do ..	..	President, Sankchura U B.
1077(S)	„	Makbul Ali, BA ..	Baduria ..	..	Arsula, P O Baduria ..		..	do ..	..	Account Department, Section 3 in Calcutta Corporation.
1078	„	Abdul Hamid ..	Manicktala ..	..	14, Simla Road ..		..	do ..	..	Landholder.
1079	„	Muhammad Abdul Bari Mondal	Baduria ..	..	Hooghly, P O Tentulia ..		..	do ..	..	ditto.
1080	„	Muhammad Latif Sardar ..	ditto ..	..	Khorgachi, P O Punra ..		..	do ..	..	ditto.
1081	„	Mahbubar Rahman ..	Basirhat ..	..	Mukundakati, P O Itenda ..		..	do ..	..	Zamindar.
1082	„	Sirajul Islam ..	Diamond Harbour	..	Diamond Harbour ..		..	do ..	..	Teacher, Diamond Harbour School.
1083	„	Murtaza	Baraset ..	..	Kazipara, Sitapara ..		..	do ..	..	Clerk, High Court, Calcutta.
1084	Mir Munshi Abdur Rahoman ..		Barrackpore ..	..	Sadar Bazar, Kunjramahal ..		..	do ..	..	Regimental Munshi.
1085	Miyan Abdur Rahaman ..		Tollygunj ..	..	7-P, Laskar Lane, Bediadaga ..		..	do ..	..	Supervisor of I S M.
1086	Moni Din Taron		Joynagar ..	..	Monipore-Banstola ..		..	Hindu ..	..	Head Master of Monipore-Banstola M E School.
1087	Moula Gazi Golam ..		ditto ..	..	Alipore ..		..	Muhammadan ..		Landholder.
1088	Munshi Abdur Rahman ..		Naihati ..	..	Jan Muhammad Road ..			do ..	..	Municipal Commissioner.
1089	„	Afsaraddin Ahmad ..	Deganga ..	..	Village Amulia, P O Pirthiba ..			do ..	..	Landholder and President, Amulia U B.
1090	„	Aktar Hossain ..	Budge Budge ..	..	Khanabati ..		..	do ..	..	President, Chaulkhola Union Board.
1091	„	Golam Mukhtader ..	Basirhat ..	..	Mukonda Kati ..		..	do ..	..	Landholder.
1092	„	Mahammad Ali Sardar	Baruipore ..	..	Hirgo ..		..	do ..	..	President, Hirgo Union Board.
1093	„	Tofazzal Hossen ..	Habra ..	..	Dakhin Sarai, P O Prithiba ..			do ..	..	Landholder.
1094	„	Rostam Ali Ahmed ..	ditto ..	..	Suria, P O Rajibpore ..			do ..	..	ditto.

Serial No.	Name.	Thana.	Place of abode—Village, road or street.	Nationality.	Quality or occupation.
	M				
1095	Munshi Serajuddin ..	Entally ..	.. 13, Ismail Street	Muhammadan ..	Businessman.
1096	„ Shaikh Khater Ali ..	Budge-Budge ..	.. Nungi	do ..	.. Vice-President, Nungi Union Board.
1097(S)	Mazumdar, Bijoy Ratna ..	Tollygunge ..	.. 54, Southend Park ..	Hindu ..	.. Bengali novel-writer and author.
1098	„ Bijoy Krishna ..	ditto ..	.. 5D, Lake View Road ..	do ..	.. School Master.
1099	„ Charu Chandra ..	Bhowanipore ..	.. 82, Haris Chatterjee Street ..	do ..	.. Merchant.
1100	„ Harendra Kumar	Hashnabad ..	.. Taki	do ..	.. Head Master, Taki Government H E School.
1101(S)	„ Hari Pada ..	Behala ..	.. Naskharpore, Behala	do ..	.. Clerk, Commercial Traffic Manager's Office, B N Railway, Kidderpore.
1102	„ Indu Bhusan ..	Bhangore ..	.. Village Saistangachi, P O Rajerhat, Bistupore.	do ..	.. President, Polerhat U B and Zamindar.
1103	„ Kashi Pati ..	Naihati ..	.. Garifa	do ..	.. Clerk, Loco Office, E B Ry.
1104	„ Kishori Mohan ..	Beliaghata ..	.. 68, Garpar Road	do ..	.. Pensioner.
1105(S)	„ Mriganka Kumar	Chitpur ..	.. 7, Kali Kumar Banerjee Lane ..	do ..	.. Merchant.
1106(S)	„ Nagendra Nath, BA	ditto ..	.. 18, Barrackpore Trunk Road, P O Cossipore.	do ..	.. Head Master, Raja Manindra Memorial H E School, Paikpara.
1107(S)	„ Pramatha Bhusen	Basirhat ..	.. Basirhat	do ..	.. Zamindari Service.
1108(S)	„ Sudhanshu Bhushan.	Sandeshkhali ..	.. Gosova	do ..	.. Manager, Gosova Estate.
1109	„ Anukul Chandra	Sonarpore ..	.. Fartabad	do ..	.. Landholder and President, Union Bench Court, Faitabad.

1110	„	Sudhir Kumar, MA	Budge-Budge	Kalipur, P O Achipur	do	Assistant Head Master, Kalipur H E School.
1111(S)	„	Upendra Nath, BA	Dum Dum	Kadihati, Dum Dum	do	Head Master, Kadihati School.
1112	Mahammad Ibrahim Ali		Magrahat	Jagadia, 24-Parganas	Muhammadan	Collecting Panchayat Union, No. 6, P S Magrahat.
1113	Mia Jayanae		Beejpore	Beejpore	do	Merchant.
1114	Mistri, Khodabux		Budge-Budge	Raghunathpur, Achipur	do	Clerk, Albion Jute Mill, Budge-Budge.
1115	Mir, Lutfar Rahman		Magrahat	Bilandapur	do	Cloth merchant.
1116	Mirde, Arjun		Kakdwip	Madhabnagar, Lot No. 9, P O Kakdwip.	Hindu	Landholder.
1117	Misra, Surja Kanta		Baduria	Dakshin Chatra	do	ditto.
1118	Mistri Nizamuddin Haidar		Budge-Budge	Raghunathpore	Muhammadan	Zamindar and Member, Pujali U B.
1119	Mitra, Anath Bandhu		ditto	Sarengabad, P O Mahestala	Hindu	Head Clerk, Budge-Budge Jute Mill.
1120(S)	„	Annada Prosad	Dum Dum	Dum Dum Cantonment	do	Assistant, Orr, Dignam & Co.
1121	„	Banamali	Manicktala	2, Moti Mitra Lane	do	Landholder.
1122	„	Bankim Chandra	Baruipur	Baruipur	do	ditto.
1123	„	Bankim Chandra	Budge-Budge	Mowkhali	do	Teacher, Mayapur M E School.
1124(S)	„	Bhola Nath	Manicktala	132, Bagmari Road	do	Cashier.
1125	„	Bhola Nath	Tollygunj C P	P403, Russa Road	do	Electric Engineer, Calcutta Electric Supply Corpn.
1126	„	Birendra Nath	Naihati	Naihati	do	Clerk, Lakshmi Industrial Bank, 80, Chowringhee Road, Calcutta.
1127	„	Fakir Chandra	Beliaghata	90, Charakdanga Road	do	Merchant.

Serial No.	Name.	Thana.	Place of abode—Village, road or street.	Nationality.	Quality or occupation.
	M				
1128	Mitra, Fanindra Nath	Jaynagar	Majilpore	Hindu	Teacher of J M Training School.
1129	,, Ganesh Chandra	Habra	Gaipur, P O Gobardanga	do	Clerk, Graham & Co, Calcutta.
1130	,, Girija Nath	Titagarh	Talpukur	do	Store-keeper, Empire Jute Mill.
1131	,, Girindra Nath	Bhowanipore	7, Benoy Basu Lane	do	Merchant and Bookmaker.
1132	,, Harendra Krishna	Jaynagar	Dakhin Barasat	do	Service-holder.
1133(S)	,, Harendra Nath	Basirhat	Pipa	do	Landholder.
1134	,, Haridas	Beliaghata	90, Charakdanga Road	do	Merchant.
1135	,, Horendra Kali	Harowa	Gopalpore	do	Landholder.
1136	,, Hrishikesh	Jaynagar	Mitrapara, Jaynagar	do	Zamindar.
1137(S)	,, J C, Esq	Ballygunge	21-1B, Firn Road	do	Professor, Vidyasagar College.
1138	,, Jatindra Krishna	Bhowanipore	14/2, Paddapukur Road	do	Clerk, Fire Brigade.
1139	,, Jatindra Nath	Diamond Harbour	Kuleswar, P O Usthi	do	Landholder.
1140(S)	,, Jatindra Nath	Bhowanipore	71, Haris Chatterjee Street	do	Teacher, Mitra Institution.
1141(S)	,, Janendra Nath	Jaynagar	Jaynagar	do	Landholder.
1142	,, Jogendra Nath	Bhangar	Kantatola	do	Naib of Zamindary Katchari.

1143	,,	Khetra Lal	..	Beliaghata	..	..	149, Raja Rajendra Lal Mitter Road.	..	do	..	..	Clerk.
1144	,,	Mr K N	..	Entally	..	..	75C, Sambhu Babu Lane	..	do	..	..	Overseer, Calcutta Corporation.
1145	,,	Khetra Das	..	Amherst Street		..	13/14, Rama Nath Mazumdar St	..	do	..	..	Teacher.
1146	,,	Nilratan	..	Bistupur	..	..	Bar Kalikapur, P O Bawali	..	do	..	..	Landholder.
1147(S)	,,	Nirmal Chandra	..	Dum Dum	..	..	Dum Dum Cantonment	..	do	..	..	Head Master, Mitra Institution.
1148	,,	Nani Lal	..	Magrahat	..	..	Benipur, P O Magrahat	..	do	..	..	Service-holder.
1149	,,	Panch Kowri	..	Tittagarh	..	..	Tittagarh Municipality	..	do	..	..	Sanitary Inspector.
1150(S)	,,	Panch Kowri	..	Naihati	..	..	Naihati	..	do	..	..	Honorary Magistrate.
1151	,,	Phani Bhusan	..	Behala	..	..	Behala	..	do	..	..	Clerk, S S Municipality.
1152	,,	Phani Bhusan	..	Rajarhat	..	..	Bistupur, P O Rajarhat-Bistupur	..	do	..	..	Clerk, Bombay Co Ld, Calcutta.
1153	,,	Phanindra Nath	..	Jaynagar	..	..	Majilpore	..	do	..	..	Teacher, J M Training School.
1154	,,	Profulla Chandra	..	Bhowanipore	..	..	34, Lansdowne Road	..	do	..	..	Zamindar.
1155	Mitra,	Ram Chandra	..	Kulpi	..	..	Kasipore, P O Karanjali	..	do	..	..	School Master.
1156(S)	Mitter,	P C, Dr	..	Beliaghatta	..	..	22-A, Garpar Road	..	do	..	..	Professor, University College of Science.

Serial No;	Name.	Thana.	Place of abode—Village, road or street.	Nationality.	Quality or occupation.
	M				
1157	Mitter, Provash Chandra	Khardah	Panihati, Agarpara, P O Kamarhati	Hindu	....
1158	„ Provas Chandra	Bhowanipore	26, Ganga Prosad Mukherjee Road	do	Surveyor, Calcutta Improvement Trust.
1159(S)	„ Pulin Bihari, BSc	Alipore	85-A, Alipore Road	do	Chemist.
1160	„ Rajani Kanta	Bijpore	Halisahar	do	Clerk, Superintending Engineers Office, Treasury Buildings, Calcutta.
1161	„ Ramendra Prasad	Bhowanipore	18-1, Kundu Lane	do	Contractor.
1162	„ Santosh Krishna	Chitpur	1, Haridhan Dutta Lane	do	Money-lender.
1163	„ Sarat Chandra	Beliaghata	9, Garpar Road	do	Clerk.
1164	„ Satish Chandra	Sonarpur	Harinabhi	do	Clerk, Calcutta Corporation.
1165	Mitra, Srish Chandra	Haroa	Uchildaha	do	Naib, Uchildaha Kutchery.
1166	„ Sudhanshu Sekhar	Canning	Canning Town	do	Assistant Agent, Port Canning & Co.
1167	„ Surendra Kali	Haroa	Gopalpore	do	Landholder.
1168	„ Surendra Nath	Alipore	16, Mohesh Chandra Dutt Lane	do	Clerk, Birkmyre Brothers.
1169(S)	„ Surendra Nath	Jaynagar	Jaynagar	do	Landholder.
1170	„ Sukumar	Bhowanipore	98, Bacoolbagan Road	do	Landlord.

1171	„	Surendra Nath	Chitpur	11 & 12, Barrackpore Trunk Road	do			Supervisor, Calcutta Corporation.
1172	„	Surendra Nath	Bistupur	Sukdebpur	do			School Master, Sukdebpur Board School.
1173	„	Tinkari	Bhowanipore	10-C, Paddapukur Road	do			Landholder.
1174	Modak,	Santosh Chandra	Khardah	Sodepur	do			Merchant.
1175	Mohan,	Dr N D	Tollygunge	P 35, Rash Behari Avenue	do			Businessman.
1176	Molla,	Abdul Jalil	Jaynagar	Sonatikari	Muhammadan			Landholder.
1177	„	Abdul Goffur	Mathurapur	Khari, P O Kasinagar	do			Landholder and Contractor.
1178(S)	„	Azizur Rahman	Kulpi	Dhola	do			Landholder.
1179	„	Alahi Box	Hashnabad	Rajapur	do			ditto.
1180	„	Ali Muhammad	Kulpi	Daulatabad	do			ditto.
1181	„	Basir Ali	Diamond Harbour	Mollapukur	do			ditto.
1182	„	Daulat	Bhangar	Shatuli	do			ditto.
1183	„	Fakir Muhammad	Magrahat	Nainan	do			Tailoring business.
1184	„	Hefazuddi	Maheshtala	Jaita, P O Maheshtala	do			ditto.
1185(S)	„	Hossain	Metiabruz	Bartola	do			Contractor, Whiteaway, Laidlaw & Co.
1186	„	Kader Box	Mahestala	Chukmira	do			Tailoring business.
1187	„	Mohammad Abdur Rahman.	Canning	Kalikatala 1st Portion	do			Landholder.

Serial No.	Name.	Thana.	Place of abode—Village, road or street.	Nationality.	Quality or occupation.
	M				
1188	Molla, Muhammad Ayub ..	Mahestala ..	.. Magura	.. Muhammadan ..	....
1189	„ Muzzafar Hossain ..	ditto ..	.. Santoshpur	do ..	.. Tailoring business.
1190	„ Muzaharali ..	Kulpi ..	.. Rangafala	.. do ..	.. Landholder.
1191	„ Rahim Baksh ..	Sandeshkhali ..	.. Sankdah	.. do ..	.. ditto.
1192	„ Md Sultan ..	Hashnabad ..	.. Harikati	.. do ..	.. Landholder and school master.
1193	„ Samir Ali	Mahestala ..	.. Chukmira	.. do ..	.. Tailoring business.
1194	„ Abdul Sattar ..	Budge-Budge ..	.. Raipur, P O Achipore ..	.. do ..	.. Merchant.
1195	„ Daserali	Canning ..	.. Ramchandra Khali ..	.. do ..	.. Landholder and Merchant.
1196	„ Khorshed Ali ..	ditto ..	.. ditto ..	.. do ..	.. ditto.
1197	„ Mainuddi	Hashnabad ..	.. Kharampore ..	.. do ..	.. Landholder.
1198	„ Omed Ali ..	Bhangore ..	.. Shampukur, P O Bhangore	.. do ..	.. Member, Shampukur Union Board and Merchant.
1199	„ Subedali	Mahestala ..	.. Chhota Mahestala ..	.. do ..	.. Trader and Landholder.
1200	„ Sabdul Ahamed ..	Bhangore ..	.. Bhangore Bazar, P O Bhangore	.. do ..	.. President, Jagulgachi Union Board and Merchant.
1201	Maitra, Tincowri ..	Baranagore ..	.. Rai Mathura Nath Choudhury's Lane, Baranagar	Hindu ..	.. Landholder.
1202	„ Taraknath ..	ditto ..	.. Hedger Road, Alambazar ..	do ..	.. Sanitary Inspector, Panihati Municipality.
1203	Muhammad Abdul Gani ..	Magrahat ..	.. Keseli, P O Usti ..	.. Muhammadan ..	Landholder.

1204	„	Afzel Ali	..	Bhangore	..	..	Raghunathpur, P O Bhangar	..	do	..	..	School Teacher, Bhangar H E School.
1205	„	Ali Reza	..	ditto	..	..	Bhagabanpore	..	..	do	..	.. Landholder.
1206	„	Azizar Rahman		Deganga	..	..	Pathorghatta	..	..	do	..	.. ditto.
1207 (S)	„	Azizuddin	..	Magrahat	..	..	Saligaria	..	..	..	do	.. .. Head clerk, Calcutta Madrasah.
1208	„	Esmile	..	Watgunge	..	..	31, Dent Mission Road		..	do	..	.. Landlord.
1209	„	Belat Ali	..	Metiaburuz	..	..	Hazi Ratan Lane, P O Bartola		..	do	..	.. Clerk, Audit Office, B-N Ry, Kidderpore.
1210	,	Dost	..	Entally	..	..	23, Middle Road	..	..	do	..	.. Landholder.
1211	„	Dildar Rahman	..	Basirhat	..	..	Gacha, P O Itinda	..	..	do	..	.. Head Pandit, Itinda M E School.
1212	„	Eusuf Ali	..	Amdanga	..	..	Rampur, P O Arkhali, Amdanga		..	do	..	.. President Panchayat and Landholder.
1213	„	Hossain	..	Beejpore	..	..	....		..	do	..	.. Mistri, Carraige Shop, Kanchrapara.
1214	„	Hossain	..	Ballygunge	..	..	24, Garcha Road	..	..	do	..	.. Service.
1215	„	Jaynal Abedin	..	Dum Dum	..	..	Nagerbazar	..	..	do	..	.. Commissioner, South Dum Dum Municipality.
1216 (S)	„	Noor, BA	..	Beliaghata	..	..	3, Gas Street	..	..	do	..	.. Ward Surveycr, Calcutta Corporation.
1217 (S)	„	Idris	..	ditto	..	..	19-4, Beliaghata Main Road		..	do	..	.. Clerk, D T S Office, Sealdah.
1218	„	Ismail Tarapdar, MSc, MB (Dr).		Habra	..	..	P O Tababeria—Vill—Arsabad		..	do	..	.. Landholder and President, Habra Union Board.
1219 (S)	„	Samsuzzaman	..	Tollygunge B P	..	..	Haltu, P O Dakhuria		..	do	..	.. Landholder.
1220	„	Siddique	..	Bhowanipore	..	..	22, Ashutosh Mukherjee Road		..	do	..	.. Merchant.
1221 (S)	„	Hassem	..	Beliaghata	..	..	19, Beliaghata Main Road		..	do	..	.. Merchant and M L C.
1222	„	Israil Khan	..	Baduria	..	..	Labanga	..	..	..	do	.. .. Landholder.

Serial No.	Name.	Thana.	Place of abode—Village, road or street.	Nationality.	Quality or occupation.
	M				
1223	Muhammad, Isaque ..	Baraset ..	.. Kazipara	Muhammadan ..	Clerk, Ishapore Rifle Factory.
1224	„ Ishaque ..	Beliaghata ..	.. 2, Gas Street	do ..	.. Personal Assistant to the Secretary, Calcutta Majlies.
1225	„ Kasemali ..	Magrahat ..	.. Saligaria	do ..	.. Landholder.
1226	„ Jahur ..	Manicktala ..	.. 7, Harish Neogi Road	do ..	.. Teacher.
1227	„ Yasin ..	Baraset ..	.. Deara, P O Rajarhat-Bistupur ..	do ..	.. Muhammadan Teacher.
1228	„ Azizar Rahaman	Basirhat ..	.. Basirhat	do ..	.. Head Pandit, Basirhat Guru Training School.
1229	Mukharji, Ajit Kumar ..	Ballygunge ..	.. 33/4, Gariahat Road	Hindu ..	.. Clerk, Messrs Williamson Magor & Co, 4, Mangoe Lane, Calcutta.
1230	„ Achinta Nath, BA ..	Habra ..	.. Rajibpore	do ..	.. Head Master, Rajibpore H E School.
1231	„ Amrita Lal ..	Khardah ..	.. Panihati	do ..	.. Contractor.
1232	„ Amrita Lal ..	Tollygunge ..	.. 15, Sree Mohan Lane ..	do ..	.. Landholder.
1233(S)	„ Amulya Charan ..	Behala ..	.. Muradpore	do ..	.. ditto.
1234	„ Amulya Dhan ..	Maheshtala ..	.. Raipur, P O Maheshtala ..	do ..	.. Clerk, Mackinnon, Mackenzie & Co, Clive Street.
1235	„ Amulya Dhan ..	Baraset ..	.. Jagulia, P O Chota Jagulia ..	do ..	.. School Master, Chota Jagulia H E School.
1236	„ Ananga Mohan ..	Chitpur ..	.. Barrackpore Trunk Road ..	do ..	.. Superintendent, Paikpara Raj Estate.

1237(S)	„	Ashutosh, BA	..	Baraset	..	..	Baraset	..	..	Law Student.
1238	„	Ashutosh	..	Joynagore	..	..	Joynagore, P O Joynagore	..	do	..	..	Landholder.
1239	„	Bato Kristo	..	Watgunj		..	21, Michael Dutt Street	..	do	..	..	Clerk, Port Commissioners.
1240	„	Bijoy Krishna	..	Habra	..	..	Dighra 28, Radha Madhab Saha Lane, Chorebagan.	..	do	..	..	Assistant, Andrew Yule & Co.
1241	„	Bejoy Madhav	..	Jagatdal	..	..	Bhatpara	..	..	do	..	..	Zamindar.
1242(S)	„	Bikash Chandra	..	Baraset	..	..	Baraset	..	..	do	..	..	Service-holder, Tramways, Calcutta.
1243	„	Bhut Nath	..	Behala	..	..	Sarsuna	..	..	do	..	..	Overseer, Budge-Budge Municipality.
1244	„	Bijoy Gopal	..	Bistupur	..	..	Joyrampur	.	..	do	..	..	Gomostha.
1245	„	Binode Bihari	..	Naihati	..	..	Garifa	..	..	do	..	..	Sarishtadar, Judge's Court, Howrah.
1246	„	Bistupada	..	Baruipur	..	..	Dehi Madan Molla	..	..	do	..	..	Clerk, Catering Department, B N Railway Home, Garden Reach, Calcutta.
1247(S)	„	Brajendra Nath, MA, BT		Ballyganj	..	..	38-2, Beltolla Road	..	..	do	..	..	Teacher.
1248	„	Brojendra Krishna		Jagatdal	..	..	Rahuta, P S Shamnagar	..	do	..	..	President, Rahuta Union Board.
1249	„	Atulananda	..	Tollygunge	..	..	23-2-1, Tollygunge Road	..	do	..	..	Clerk, Mercantile Office.
1250	„	Atul Krishna	..	Alipore	..	..	7D, Sankar Bose Road	..	do	..	..	Clerk.
1251	„	Binoy Bhusan	..	Naihati	..	..	Kantalpara	..	..	do	..	..	Landholder and Contractor.
1252	„	Birendra Nath	..	Baraset	..	..	Santoshpur, P O Duttapukur	..	do	..	..	Landholder.
1253	„	Chandi Charan	..	Jagatdal	..	..	Bhatpara	..	..	do	..	..	Clerk, Port Commissioners' Office, Calcutta.

Serial No.	Name.	Thana.	Place of abode—Village, road or street.	Nationality.	Quality or occupation.
	M				
1254	Mukharji, Charu Chandra ..	Maheshtala ..	.. Krishnagar ..	.. Hindu ..	.. Clerk, 43, Garden Reach Workshop.
1255	„ Chintaharan ..	ditto ..	.. ditto ..	.. do ..	.. Landholder and Banker.
1256	„ Chuni Lal ..	ditto ..	.. Ganipur, P O Maheshtala ..	do ..	.. Landholder.
1257	„ Dhirendra Nath ..	ditto ..	.. ditto	.. do ..	.. Clerk, Duncan Brothers & Co, Calcutta.
1258	„ Dhirendra Nath ..	Tollygunge ..	.. P407, Jatin Das Road ..	do ..	.. Landholder and businessman.
1259	„ Dhirendra Nath ..	Haroa ..	.. Khalisadi	.. do ..	.. Secretary, Shalipore M E School.
1260	„ Dhiraj Chandra ..	Bijpore ..	.. Kanchrapara ..	.. do ..	.. Teacher.
1261	„ Dindayal ..	Baraset ..	.. Baraset	.. do ..	.. Book-keeper, Harman & Co, Calcutta.
1262(S)	„ Girindra Nath ..	Bhowanipore ..	.. 25, Haldarpara Road ..	.. do ..	.. Zamindar.
1263(S)	„ Girindra Nath ..	Beliaghata ..	.. 78 & 79, Charakdanga Road ..	do ..	.. Coal Merchant.
1264	„ Girindra Nath ..	Alipore ..	.. 1, Bakulbagan Road sec "T" ..	do ..	.. Retired Head Clerk.
1265	„ Haro Kumar ..	Beliaghata ..	.. 73, Talpukur Road ..	.. do ..	.. Clerk.
1266	„ Harendra Nath ..	Watgunge ..	.. 41, Watgunge Street ..	.. do ..	.. Zamindar.
1267	„ Haripada ..	Magrahat ..	.. Multi	.. do ..	.. Landholder.

1268	„	Harsha Nath	..	Tollygunge	..	..	P No. 177, Jatin Das Road	..	do	..	.. Contractor.
1269	„	Hemanta Kumar	..	Titagarh	..	..	Talpukur	..	do	..	.. Landholder.
1270(S)	„	Hiranmay	..	Khardah	..	..	Khardah	..	do	..	.. Clerk, Accountant-General, Bengal's Office.
1271	„	Joshit Kumar	..	Maheshtala	..	..	Maheshtala ..	..	do	..	.. Clerk, General Family Pension Fund, 2, Fairlie Place, Calcutta.
1272	„	Jatindra Nath	..	ditto	..	..	Khardah, Kulinpara ..	..	do	..	.. Independent gentleman.
1273	„	Jatindra Nath	..	Entally	..	..	4, Deb Lane ..	..	do	..	.. Landholder and Businessman.
1274	„	Jitendra Nath	..	Maheshtala	..	..	Ganipur, P O Maheshtala	..	do	..	.. Clerk, Bombay & Co, Lyons Range, Calcutta.
1275	„	Jnanendra Nath	..	Basirhat	..	..	Basirhat	..	do	..	.. Landholder.
1276	„	Jogendra Nath	..	Behala	..	..	Barisa	..	do	..	.. Clerk, Accountant-General, Bengal's Office.
1277	„	Jay Gopal	..	Watgunj	..	..	2, Bishu Babu Lane ..	..	do	..	.. Zamindar, Bakulia House.
1278	„	Jyotish Chandra	..	Dum-Dum	..	..	Dum-Dum Cantonment	..	do	..	.. Clerk, Inspection Section, Gun and Shell Factory, Cossipore.
1279	„	Jogendra Nath	..	Magrahat	..	..	Dhemua	..	do	..	.. Clerk.
1280	„	Kedar Nath	..	Baranagar	..	..	Baranagar, Sastitola ..	..	do	..	.. Landholder.
1281	„	Kenaram	..	Baraset	..	..	Ardibhag, P O Baraset	..	do	..	.. ditto.
1282	„	Khetra Nath	..	ditto	..	..	Sasan village and P O ..	..	do	..	.. President-Panchayat.

Serial No.	Name.	Thana.	Place of abode—Village, road or street.	Nationality.	Quality or occupation.
	M				
1283	Mukharji, Khirode Prosad ..	Habra ..	.. Gobardanga	Hindu ..	.. Landholder.
1284(S)	,, Khitiprasanna, BA	ditto ..	.. ditto	do ..	.. Zamindar.
1285	,, Kirtibhushan, BSC	Khardah ..	.. Rahrah	do ..	.. Clerk, Government Stationery Office.
1286	,, Kamini Kumar ..	Maheshtala ..	.. Ganipur	do ..	.. Clerk, Accountant-General, Bengal, Treasury Building, Supdt, W A Section No. II.
1287	,, Kalipada .	Canning ..	.. Charabidya	do ..	.. President Panchayat, Charabidya Union.
1288(S)	,, Kristo Chandra ..	Bhowanipore ..	.. 269, Kalighat Road	do ..	.. 2nd Clerk, Survey Department, Calcutta Corporation.
1289	,, Krishna Chandra ..	Bistupur ..	.. 13, Mahamaya Lane, Kalighat, Calcutta.	do ..	.. Zamindar and Member of Chandi Union Board and Court.
1290	,, Mani Mohan ..	ditto ..	.. Panitor	do ..	.. President-Panchayat.
1291(S)	,, Manmathanath ..	Maniktala ..	.. 173, Raja Dinendra Street ..	do ..	.. Engineer and Contractor.
1292(S)	,, Manuj Mohan, MA, BT	Ballygunj ..	.. 38-2, Beltola Road	do ..	.. Teacher.
1293	,, Misri Lal ..	Maheshtala ..	.. Ganipur, P O Maheshtala ..	do ..	.. Clerk, Planters' Stores and Agency Co, Ld, Calcutta.
1294	,, Murarimohan ..	Behala ..	.. Diamond Harbour Road ..	do ..	.. Assistant to the Registrar of the Calcutta University, Senate House.
1295	,, Nalinikanta ..	Baraset ..	.. Baraset	do ..	.. Landholder and Contractor.

296	„	Nanda Lal	..	Bhowanipore	..	..	13, Ketoakhoti Lane	..	..	do .. .. Head Clerk, Government Telgraph Stores.
1297	„	Nani Gopal	..	Titagarh	..	..	Talpukur	..	..	do .. .. Landholder.
1298	„	Nagendra Nath	..	Barrackpore	..	..	Monirampore	..	..	do .. .. Residential Inspector, Ripon College, Calcutta.
1299	„	Narendra Nath	..	Bhowanipore	..	..	35, Kalighat Road	..	..	do .. .. Clerk in a Government Office.
1300	„	Narendranath	..	Baranagar	..	..	Victoria Road	..	..	do .. .. Retired Govt Servant.
1301	„	Nani Gopal	..	Sonarpur	..	..	Boral ..	..	..	do .. .. Employee, Bengal Chamber of Commerce.
1302(S)	„	Nirode Chandra, BA		Naihati	..	..	Kantalpara	..	..	do .. .. School Master, Bhatpara School
1303	„	Nripendra Nath	..	Khardah	..	..	Khardah ..	..	..	do .. .. Landholder.
1304	„	Panchanan	..	Habra	..	..	Gobardanga	..	..	do .. .. Jute Broker and Municipal Commissioner.
1305	„	Panna Lal	..	Maheshtala	..	..	Ganipur, P O Maheshtala		..	do .. .. Clerk, Refrigerator (India), Ltd, 246, Park Street, Calcutta.
1306(S)	„	Peari Mohan	..	Chitpur	..	..	4, Madhushudan Chatterjee Lane	..		do .. .. Merchant.
1307	„	Parindra Nath	..	Khardah	..	..	Kulinpara, Kharda	..	..	do .. .. Clerk, Assistant Legal Remembrancer's Office, Calcutta.
1308(S)	„	Prabodh Chandra	..	Tollygunge	..	..	Baisnabghata	..	..	do .. .. Superintendent, General Section, Agent Office, E B Ry, Koilaghat Street.
1309	„	Probodh Chandra	..	Sonarpur		..	Village Jagatdal	..	..	do .. .. Senior Clerk, Traffic Department, B N Railway.
1310	„	Prafulla Chandra	..	Tollygunge	..	..	7, Monoharpukur Road		..	do .. .. Coal Merchant.
1311	„	Prafulla Kumar	..	Habra	..	..	Gobardanga	..	..	do .. .. Assistant Accountant, Martin & Co.
312	„	Prafulla Kumar	..	Haroa	..	..	Kulgachi Kachari	..	..	do .. .. Naib, Sur Babu's Estate, Kulga.

Serial No.		Name.	Thana.	Place of abode—Village, road or street.	Nationality.	Quality or occupation.
		M				
1313	Mukharji,	Pran Gopal ..	Watgunj ..	.. 2, Bishu Babu Lane	Hindu ..	.. Zamindar, Bakulia House.
1314	„	Phani Bhusan ..	Basirhat ..	.. P O Itinda	do ..	.. Head Master, Itinda M E School.
1315	„	Phani Bhusan ..	Behala ..	.. Panchanantola, Behala ..	do ..	.. School Master, Behala M E School.
1316	„	Pronabdev ..	Baruipur ..	.. 8, Gopal Mukharji Lane, Shanagore Road.	do ..	.. Retired Police Officer and Trader.
1317(S)	„	Purna Chandra, BL	Baranagar ..	.. Baranagar	do ..	.. Working as Manager in Zamindary Estate.
1318	„	Raj Kumar ..	Beliaghata ..	.. 9, Canal East Bye-lane ..	do ..	.. Landholder and Merchant.
1319	„	Ram Chandra ..	Baranagar ..	.. Belgharia	do ..	.. Landholder, Honorary Magistrate.
1320	„	Ram Chandra, BA, BL	ditto ..	.. Rameswar M E School ..	do ..	.. Head Master.
1321	„	Ram Krishna ..	Chitpur ..	.. 11, Simlaipara Lane	do ..	.. Landholder.
1322	„	Rash Bihari ..	Baraset ..	.. Gustia, P O Badu	do ..	.. ditto.
1323	„	Sachida Nanda ..	Bhowanipore ..	.. 48, Chakrabaria South Road ..	do ..	.. Businessman.
1324	„	Sushil Chandra, BA	Chitpur ..	.. 4, Simlaipara Bye-lane	do ..	.. Clerk, E B Ry, Koilaghat.
1325	„	Sasanka Bhusan ..	Bhowanipore ..	.. 152, Russa Road	do ..	.. Clerk, Attorney's Office, 3, Hastings Street.
1326	„	Sashi Bhusan ..	Behala ..	.. Bonomali Nasker Road ..	do ..	.. Cashier, Messrs Barry & Co, 2, Fairlie Place, Calcutta.

1327(S)	„	Satish Chandra	..	Tollygunge	..	..	4-1, Raja Sita Ram Road	..	do	..	..	Landholder.
1328	„	Sachi Prasanna	..	Habra	..	..	Village and P O Gobardanga	..	do	..	..	Zamindar.
1329	„	Sati Prasanna	..	ditto	..	..	ditto	..	do	..	..	ditto.
1330	„	Satyendra Nath	..	Khardah	..	..	Kulinpara	..	do	..	..	Merchant.
1331	„	Shyama Prosanna		Nowpara	..	..	Garulia	..	do	..	..	Head Clerk, Garulia Municipality.
1332	„	Shib Chandra	..	Naihati	..	..	Naihati	..	do	..	..	Clerk, District Board Office, Hooghly.
1333	„	Shib Nath	..	Calcutta	..	..	Telegraphic Check Office	..	do	..	..	D A-G's Office, Dalhousie Square South, Calcutta.
1334	„	Shib Das	..	Baranagar	..	..	Victoria Road, Baranagar	..	do	..	..	Contractor.
1335(S)	„	Shibendra Nath, BA		Basirhat	..	..	Basirhat	..	do	..	..	Merchant.
1336	„	Subodh Kumar	..	Khardah	..	..	Ghoshpara, Panihati	..	do	..	..	Clerk, Chief Auditor's Office, E B Ry, Store Section, Sealdah.
1337	„	Sudhir Krishna	..	Dum-Dum	..	..	Kadihati 8, Rajkumar Lane, Beadon Street, Calcutta.		do	..	..	Landholder.
1338	„	Sukumar	..	Maheshtala	..	..	Maheshtala	..	do	..	..	Clerk, Bird & Co.
1339	„	Surendra Nath	..	Behala	..	..	Bonomali Nasker Road, Gabtola, Behala P O.		do	..	..	Head Clerk, Store Department, Garden Work, Messrs Macneill & Co, Fairlie Place, Calcutta.
1340(S)	„	Surendra Nath, BA		Baruipur	..	..	Baruipur	..	do	..	..	Head Master, Baruipur H E School.

Serial No.	Name.	Thana.	Place of abode—Village, road or street.	Nationality.	Quality or occupation.
	M				
1341	Mukharji, Upendranath ..	Beliaghata ..	.. 46-1, Canal East Road ..	Hindu ..	.. Mill-owner.
1342	„ Ut Kul Kumer ..	Beejpore ..	.. Kanchrapara Clerks' Colony (Beejpore)	do ..	.. Loco Examiner.
1343	Munshi Abdul Basid ..	Ballygunge ..	.. 16, Beck Bagan Lane ..	.. Muhammadan	.. Landholder.
1344(S)	„ Abdul Rasid ..	Maheshtala ..	.. Santoshpore ..	.. do ..	.. Clerk, Chief Engineer's Drawing Office, B N Ry Head Office, Kidderpur.
1345	„ Akhtar Hossain ..	Budge-Budge ..	.. Khasbati ..	.. do ..	.. President, Choulkhola Union Board.
1346	„ Abdur Rashid ..	Ballygunge ..	.. 25, Old Ballygunge 2nd Lane ..	do ..	.. Contractor and Landholder.
1347	„ Amdad Hossain ..	Habra ..	.. Joygachi, P O Tababeria ..	do ..	.. School Master.
1348	„ Elahi Bux ..	Basirhat ..	.. Mathurapore ..	.. do ..	.. President.
1349	„ Golam Mawla Khardah	ditto ..	.. Aharampore ..	.. do ..	.. Landholder.
1350	„ Golam Chand Mondal	Baduria ..	.. Baduria ..	.. do ..	.. Commissioner, Baduria Municipality.
1351	„ Golam Sarwar ..	Rajarhat ..	.. Ghuni, Rajarhat, P O Bistupur ..	do ..	.. President Panchayat and Landholder.
1352	„ Golam Mahiuddin ..	Basirhat ..	.. Khordobalia ..	.. do ..	.. Landholder.
1353	„ Md Ibrahim ..	Noapara ..	.. Nawabganj ..	.. do ..	.. Clerk, Rifle Factory.
1354	„ Isa Kha ..	Chitpur ..	.. 8-3, Mandalpara Lane, P O Chitpur	do ..	.. Building Contractor.
1355	„ Khairuddin ..	Khardah ..	.. Agarpara ..	.. do ..	.. Independent gentleman.

1356	,,	Lal Muhammad	..	Baraset	..	..	Falta, P O Sasan	..	do	.. President Panchayat.
1357	,,	Mahammad Abdul		Basirhat	..	..	Vill Mathurapur, P O Kholapota	..	do	.. Landholder and President, Ghosarah Union Board.
1358	,,	Mahammad Naime	..	Mathurapur	..	..	Sankarpur	..	do	.. Landholder and President Panchayat of Union No. II.
1359	,,	Mahammad Imdad Ali		Kulpi	..	..	Village Berandari, P O Hatuganj	..	do	.. Landholder.
1360	,,	Muhammad Mogul Jan		Chitpur	..	..	Railway quarters, Cossipore Road		do	.. Assistant Goods Supervisor, Chitpur.
1361	,,	Muhammad Mogul Jan		Rajarhat	..	..	Baligore	..	do	.. Teacher, Bhagabanpur M E School.
1362	,,	Mazharul Haq	..	Ballygunge	..	..	12, Baluhakak Lane	..	do	.. Landholder.
1363	,,	Mohini Mohan	..	Cossipore	..	..	37-1, Cossipore Road	..	Hindu	.. Pension-holder from Zamindar Estate.
1364	,,	Md. Mobarek Ali	..	Habra	..	..	Nokepul, P O Baraballavpara	..	Muhammadan	.. School Master.
1365	,,	Nur Muhammad Naskar		Magrahat	..	..	Magrahat	..	do	.. Landholder.
1366	,,	Mokteor Ali Naskar	..	ditto	..	..	ditto	..	do	.. ditto.
1367	,,	Moheb Ahmed	..	Deganga	..	..	Sathatia, P O Deganga	..	do	.. Tradesman.
1368	,,	Ramjanali Mondal	..	Swarupnagar	..	..	Banglani, Molongapara	..	do	.. Landholder.
1369	,,	Sahib Ahmed	..	Deganga	..	..	Sathatia, P O Deganga	..	do	.. Tradesman.
1370	,,	Solaman ..	..	Noapara	..	..	Nawabganj	..	do	.. Draftsman, Rifle Factory Offi ce.
1371	,,	Tasaddak Hossein	..	Ballygunge	..	..	10, Bright Street	..	do	.. Landholder.
		N								
1372	Nag, Haripada	..		.. Entally	..	..	70-1A, Ananda Palit Road	..	Hindu	.. Landholder.
1373	,, Kristodas	..		.. Khardah	..	..	P O Sukchar, vill Sukchar	..	do	.. Retired Clerk, E B Ry, Sealdah, Cheif Auditor's Office, Traffic Audit Branch, M Section.

Serial No.	Name.	Thana.	Place of abode—Village, road or street.	Nationality.	Quality or occupation.
	N				
1374(S)	Nandi, Atul Krishna, BL ..	Beliaghata ..	.. 57A, Raja Dinendra St (Residence), 100, Garpar Road (School address).	Hindu ..	.. Rector, Atheneum Institution.
1375	„ Bipin Behari ..	Barrackpore ..	.. Sadar Bazar	do ..	.. Merchant.
1376	„ Jiban Krishna ..	Beliaghata ..	.. 62½ Talpukur Road	do ..	.. Clerk.
1377(S)	„ Mathura Kanta ..	Barasat ..	.. Barasat	do ..	.. Head Master, Barasat Government School.
1378	Naskar, Abdul Bari ..	Joynagore ..	.. Killey Durganagore	Muhammadan	.. Landholder.
1379	„ Khoshdel Ali ..	Protapnagore ..	.. Narayanpur	do ..	.. ditto.
1380	„ Abdus Sobhan ..	Diamond Harbour	.. Patra, P O Diamond Harbour ...	do ..	.. Naib, Shovabazar Raj Estate.
1381	„ Abdul Rahman ..	Kulpi ..	.. Raghunathpur	do ..	.. Landholder and Inspecting Pandit.
1382	„ Azad Baksh ..	Diamond Harbour	.. Mohanpore	do ..	.. Landholder.
1383	„ Akshay Kumar ..	Maheshtala ..	.. Chandernagore	Hindu ..	.. Clerk.
1384	„ Annada ...	do ..	.. Ashuti	do ..	.. Trader and Landholder.
1385	„ Bhupendra Nath ..	Magrahat ..	.. Kedipukur, P O Magrahat ..	do ..	.. Landholder.
1386	„ Anumati ..	Maheshtala ..	.. Mahadebnagar	do ..	.. Contractor.

1387	„ Habibar Rahman	.. Magrahat	..	.. Belaria	..	.. Muhammadan	.. Landholder and School Master.
1388(S)	„ Hem Chandra	.. Beliaghata	..	.. 72, Beliaghata Main Road	..	Hindu ..	.. Zamindar, Honorary Magistrate and Councillor, Calcutta Corporation.
1389	„ Jogendra Kumar	.. do	..	.. 73, ditto	..	do ..	.. Zamindar.
1390	„ Sarat Chandra	.. Maheshtala	..	.. Jagannathnagar	..	.. do ..	.. Landholder.
1391	„ Sarat Chandra	.. Beliaghata	..	.. 8, Kali Tara Bose Lane	..	do ..	.. Zamindar.
1392	„ Sarat Chandra	.. Mathurapur	..	.. Bhagabanpur, Kadupukur	..	do ..	.. Landholder.
1393	„ Surendra Nath	.. Maheshtala	..	.. Chandernagore	..	.. do ..	.. School Master.
1394	„ Md. Tabrezali	.. Bistupur	..	.. Gouripur	..	.. Muhammadan	.. Government Pensioner.
1395	„ Khirod Behari, BA.	.. Baduria	..	.. Arbelia, P O Arbelia	..	Hindu	.. Head Master, Arbelia H E School.
1396	„ Kusum Kumar	.. Kulpi	..	.. Village Haura	..	.. do ..	.. Landholder.
1397	Nath, Jadu Gopal	.. Mathurapur	..	.. Barashi	..	.. do ..	.. Teacher, Kashinagore M E School.
1398	„ Kanai Lal	.. Rajerhat	..	.. Chandpur, P O Rajerhat, Bistupur		do ..	.. President, Union Board, Chandpur, Landholder.
1399	„ Sailendra Nath	.. Baraset	..	.. Jagulia	..	.. do ..	.. President, Jagulia Union Board.
1400	Neaz Ahmad ..	.. ditto	..	.. Kajipara, Sitipara	..	.. Muhammadan	.. Landowner.
1401(S)	Neogi, Anil Chandra	.. Manicktala	..	.. 56, Ultadingi Main Road	..	Hindu ..	.. Read up to M. A.
1402	„ Bankim Chandra	.. Khardah	..	.. Bandipur, P O Rahara	..	do ..	.. President, Bandipur Union Board.
1403(S)	Neya, Sushil Chandra, BA, BL	Mathurapur	..	.. Mathurapur	..	.. do ..	.. Head Master.
404	Nayak, Chandi Charan, BA, BL	Budge-Budge	..	.. Budge-Budge	..	.. do ..	.. Head Master, P K H E School.

Serial No.	Name.	Thana.	Place of abode—Village, road or street.	Nationality.	Quality or occupation.
	P				
1405	Paik, Dulal Chandra	Beniapukur	53, Beniapukur Lane	Hindu	Contractor.
1406	Pain, Nilmani	Maniktola	13, Simla Road	Indian Christian	Retired School Teacher.
1407	Paik, Shiba Prasad	Sagore	Village Beguakhali	Hindu	Landholder.
1408(S)	Pal, Ashutosh, MA	Tollygunge	Kasba	do	Professor.
1409	„ Ashutosh	Joynagore	Joynagore, Telipara	do	Service-holder.
1410	„ Behari Lal, BSC	Metiabruz	Fatehpur	do	Clerk, Calcutta Corporation, Accounts Department.
1411	„ Bijoy Chandra	Magrahat	Multi, P O Multi	do	Service-holder.
1412	Pan, Chandra Sekhar	Tollygunge	Brahmapur, P O Boral	do	Landholder.
1413(S)	Pal, Dhruba Nath	Manicktala	53, Badridas Temple Street	do	Manager of a Rice Mill.
1414	„ Hari Das, BA	Nawpara	Nawabganj	do	Head Master, Nawabganj H E School.
1415	„ Jogendra Nath	Habra	Mena, P O Tababeria	do	Landholder.
1416	„ Kailash Chandra	Metiabruz	Mudiali	do	ditto.
1417	„ Khagendra Nath	Watgunge	9, Romanath Pal Road	do	ditto.
1418	„ Krishna Lal	Cossipore	46, Barrackpore Trunk Road	do	Shop-keeper.

1419	„	Madan Mohan	..	Naihati	..	..	Sastri Road	..	..	do	..	..	Coal Merchant.
1420	„	Man Mohan ..	..	Titagarh	..	..	Titagarh	..	..	do	..	..	2nd Clerk, Titagarh Paper Mill.
1421(S)	„	Nagendra Nath, MA	..	Basirhat	..	..	Basirhat	..	..	do	..	..	Head Master, Basirhat H E School.
1422	„	Nemai Charan	..	Kulpi	..	..	Malikpore	..	..	do	..	..	President Panchayat.
1423	„	Paresh Nath	..	Watgunge	..	..	9, Romanath Pal Road	..	do	..	..	..	Landlord.
1424	„	Praphulla Kumar	..	Bijpore	..	..	Bijpore	..	..	do	..	..	Landholder and Merchant.
1425	„	Prosad Chandra (No II)	..	Baruipur	..	..	Baruipur	..	..	do	..	..	Clerk, D T S Office, E B R, Calcutta District.
1426(S)	„	Provat Chandra	..	Metiabruz	..	..	Mudiali Road	..	..	do	..	..	Assistant, Remington Typewriter Co (India), Ltd.
1427	„	Priya Nath ..	..	Tollygunge	..	..	Kasba village and P O..	..	..	do	..	..	Teacher.
1428	„	Prokash Chandra, BA	..	Metiabruz	..	..	Mudiali, P O Garden Reach	..	do	..	..	..	Clerk, Audit Department, B-N Railway, Kidderpore.
1429(S)	„	Rajendra Nath, BA	..	ditto	..	..	Mudiali ..	..	..	do	..	..	Head Master, Turner Morrison H E School and Landholder.
1430	„	Sadhan Chandra	..	Maheshtala	..	..	Krishnagar	..	..	do	..	..	Trader and Landholder.
1431	„	Satya Pradip	..	Nawapara	..	..	Nawabganj	..	..	do	..	..	Contractor, Order-supplier and Landholder.
1432	„	Sarat Chandra	..	Budge-Budge	..	..	Nangi, P O Maheshtala	..	do	..	..	..	Contractor.
1433	„	Satish Chandra	..	Kulpi	..	..	Deria	..	..	do	..	..	Landholder.
1434	„	Sashi Bhusan	..	Kakdwip	..	..	Lot No. 5, Anandanagar	..	do	...	..	..	ditto.

Serial No.	Name.	Thana.	Place of abode—Village, road or street.	Nationality.	Quality or occupation.
	P				
1435(S)	Pal, Sris Chandra ..	Entally ..	.. 37, Ananda Palit Road ..	Hindu ..	.. Head Master, Entally Academy.
1436	„ Suresh Nath ..	Behala ..	.. Sarsuna	do ..	.. Contractor.
1437	„ Upendra Nath ..	Deganga ..	.. Shampukur, P O Hadipur ..	do ..	.. Landholder and Arathdar.
1438	Palit, Jayanta Kumar ..	Entally ..	.. 71, Ananda Palit Road ..	do ..	.. Businessman.
1439(S)	Pandey, Sarat Chandra ..	Bhangore ..	.. Bodra	do ..	.. Teacher, Bodra H E School.
1440	„ Laksminarayan ..	Bhowanipore ..	.. 54, Sambhu Nath Pandit Street ..	do ..	.. Zamindar and Merchant.
1441	Palodhi, Narendra Nath ..	Magrahat ..	.. Multi	do ..	.. Landholder.
1442	Parui, Nagendra Nath ..	Falta ..	.. Kantar, P O Falta	do ..	.. School Master.
1443	Patra, Bama Charan ..	Baruipur ..	.. Padmapukur, P O Baruipur ..	do ..	.. Teacher, Baruipur H E School.
1444	„ Biraj Mohan ..	Sandeshkhali ..	.. Ghatihara	do ..	.. Talukdar, H E School.
1445	„ Girish Chandra ..	Sagore ..	.. Ghoramara	do ..	.. Landholder.
1446	Patitanda, Madhusudan, BA	Budge-Budge ..	.. Sarangabad, Budge-Budge ..	do ..	.. Teacher, Sarangabad.
1447	Patra, Shama Pada, BL ..	Canning ..	.. Village Tangrakhali, P O Canning	do ..	.. Head Master, Canning H E School.
1448	Poddar, Banku Behari ..	Chitpore ..	.. Srish Chaudhury Lane ..	do ..	.. Jute Merchant.
1449	Pradhan, Nirmal Chandra ..	Sarupnagar ..	.. Saguna	do ..	.. Landholder.

1450	Pramanik, Ashutosh	.. Baranagore ..	.. Victoria Road, Alambazar	..	do	..	.. Landholder.
1451	„ Bata Kristo	.. Bhowanipore ..	.. 57-1, Lansdowne Road..	..	do	..	.. Zamindar.
1452	„ Susil Kumar	.. Diamond Harbour	.. Parulia ..	..	do	..	.. Teacher, Diamond Harbour H E School.
1453	„ Mani Mohan	.. ditto ..	.. Parulia, P O Diamond Harbour	..	do	..	.. Landholder.
1454	Purkait, Anukul Chandra	.. Mathurapur ..	.. Purkaitpore, P O Mathurapur	..	do	..	.. Zemindar's Amla.
1455	„ Behari Lal	.. ditto ..	.. Singh's Chak ..	..	do	..	.. Head Master, Kowtola M E School.
1456	„ Jogendra Nath	.. ditto ..	.. Mathurapur ..	..	do	..	.. Landholder.
1457	„ Sarada Prasad	.. Falta ..	.. Abasbaria, P O Shaipur	..	do	..	.. ditto.
1458	„ Suresh Chandra	.. Mathurapur ..	.. Mathurapur ..	..	do	..	.. Teacher, Mathurapur High School.
1459	„ Upendra Nath	.. Diamond Harbour	.. Mathur, P O Sarisha ..	..	do	..	.. School Master.
1460	„ Upendra Nath	.. ditto ..	.. Narbari ..	..	do	..	.. ditto.
1461	Pathak, Jitendra Nath	.. Haroa ..	.. Salipor e ..	..	do	..	.. Retired Railway Officer.
	R	..					
1462(S)	Rahaman, Abdur	.. Beliaghata ..	.. 106, Narikeldanga Main Road	..	Muhammadan	..	.. Supervisor, Gordon and Co.
1463(S)	„ Azizar	.. Diamond Harbour	.. Village Basantapore, P O Sarisa	..	do	..	.. Clerk, Barabazar Post Office, Calcutta.
1464	„ Fazlar	.. Beliaghata ..	.. 141, Narikeldanga Main Road	..	do	..	.. Tax Collector, Calcutta Corporation.
1465	„ Bazlur	.. ditto ..	.. 9, Motilal Sen Lane ..	..	do	..	.. Merchant.
1466	„ Lutfar	... Baruipur ..	.. Nove	..	do	..	.. Teacher, Nove M E School and Junior Madrasa.
1467	„ Matiar	.. Manicktala ..	.. 2, Sariatullah Ostagar Lane	..	do	..	.. Landholder.
1468	Raisuddin Ahmed	.. Watgunge ..	.. 18-1, Koyla Sarak Road	..	do	..	.. ditto.

Serial No.	* Name.	Thana.	Place of abode—Village, road or street.	Nationality.	Quality or occupation.
	R				
1469	Rajagopal, P V S	Garden Reach	Paharpore Road	Indian	Accountant, Kesoram Cotton Mills, Garden Reach.
1470	Rakhit, Gour Chandra	Habra	Khanturia	Hindu	Businessman.
1471	„ Kali Prasanna	Baranagar	Palpara, Tebin Road	do	Trader.
1472	„ Kali Das	Habra	Gobordanga P O, Vill Khantura	do	Landholder and Merchant.
1473	„ Sasi Bhusan	Alipore	51/1, Mayerpore Road	do	Merchant.
1474	„ Sivadas	Habra	Haidadpur	do	Sugar Merchant.
1475	Ray, Amar Nath	Beliaghata	71, Peari Mohan Sur Garden Lane	do	Landholder.
1476(S)	„ Amulya Nath	Deganga	Chakla	do	ditto
1477	„ Amulya Bhusan	Kakdwip	Fraserganj, Kasimbazar Wards Estate Katchery.	do	Naib, Zamindar's Kutchary.
1478	„ Ashutosh	Titagarh	Barakantalia, P O Nilganj	do	Landholder.
1479(S)	„ Mr. Bibhudhan, MA, BT	Mograhat	Dhanghata, P O Mograhat	Christian	David Hare Training College, Ballygunge, Calcutta.
1480	„ Benoy Kristo	Alipore	11, Chetla Central Road	Hindu	Merchant.
1481	„ Bhutnath	Joynagore	Majilpur	do	Service-holder.
1482(S)	„ Bhusan Chandra	Bhowanipore	41, Sankaripara Road	do	Reader, Government of India Press, Calcutta.

1483	„	Brojendra Kumar	..	Titagarh	..	..	Barakantalia, P O Nilganj	..	do	..	.. Landlord.
1484	„	Ganga Prasad	..	Behala	..	..	Behala	..	do	..	.. Retired Clerk, Calcutta Corporation.
1485	„	Ganesh Chandra	..	Maheshtala	..	..	Chotta	..	do	..	.. Clerk and Landholder.
1486	„	Girindra Nath	..	Jagatdal	..	..	Bhatpara	..	do	..	.. Clerk in Port Commissioners' Office, Calcutta.
1487(S)	„	Harendra Nath Choudhury.		Baranagar	...	..	Mathura Nath Choudhury Lane	..	do	..	.. Landholder.
1488	„	Hari Charan	..	Baraset	..	..	Nibadhui, P O Duttopukur	..	do	..	.. Teacher.
1489	„	Jagatchandra	..	Cossipore	..	..	40, Barrackpore Trunk Road	..	do	..	.. Clerk.
1490	„	Jatindra Nath	..	Budge-Budge	..	..	Burul	..	do	..	.. President, U B, Telari.
1491	„	Jatindra Mohan	..	Alipore	..	..	63, Mayerpur Road ..	..	do	..	.. Zamindar and Rice Mill Owner.
1492	„	Kalidas	..	Tollygunge	..	..	P 230-3, Raja Basanta Roy Road		do	..	.. Teacher and Poet.
1493	„	Kalikrishna	..	Bijpore	..	..	Bijpore	..	do	..	.. Teacher, Halishahar H E School.
1494	„	Nagendra Nath	..	Canning	..	..	Canning Town ..	..	do	..	.. Merchant.
1495	„	Panchanan	..	Garden Reach	..	..	Fatehpur ..	..	do	..	.. Clerk in a Merchant Office.

Serial No.	Name.	Thana.	Place of abode—Village, road or street.	Nationality.	Quality or occupation.
	R				
1496	Ray, Phani Bhushan	Bhowanipore	4, Gungaprasad Mukherji Road	Hindu	Merchant.
1497(S)	„ Prafulla Kumar	Basirhat	Itinda	do	Landholder.
1498	„ Rabindra Nath	Baduria	Khorigachi and 52-B, Kalighat Road	do	Zamindar.
1499	„ Rabindra Nath, BSC	Behala	Behala	do	ditto.
1500	„ Ramesh Chandra	Tollygunge	Dhakuria village and P O	do	Sharistadar, Baruipore Munsif's Court.
1501	„ Ramani Mohan	Beliaghata	7B, Rajendra Lala Street	do	Student.
1502	„ Rash Behari	Rajarhat	Salua, P O Rajarhat-Bistupur	do	Landholder.
1503	„ Ratish Chandra	Baranagar	Kutighata	do	Clerk, Merchant Office, Calcutta.
1504	„ Santosh Kumar	Dagonga	Village Jadabpur, P O Hadipore	do	Landholder.
1505	„ Santosh Chandra	Rajarhat	Bhatinda, P O Rajarhat	do	Vice-President, Rajarhat-Bistupur Union Board and Landholder.
1506(S)	„ Saurindranath, MA	Behala	Behala	do	Zaminder.
1507(S)	„ Sudhindra Nath, BA	Baduria	Punra	do	ditto.
1508	„ Sudhir Ranjan	Bijpore	E B Ry Colony, Bijpore	do	Chief Draftsman, Loco shop, E B Ry, Kanchrapara.
1509	„ Surendra Nath	Diamond Harbour	Chanda	do	ditto.

1510	„	Surendra Nath	..	Rajarhat	..	..	Bhatinda, P O Rajarhat-Bistupur		do	..	..	Landholder.
1511	„	Tarak Nath	..	Baduria	..	..	Palta, P O Punra	..	do	..	..	Merchant.
1512	„	Upendra Chandra	..	Titagarh	..	..	Seuli	..	do	..	..	President Panchayat.
1513(S)	„	Chaudhury, Ashutosh	..	Bhangore	..	..	Budra	..	do	..	..	Landholder.
1514	„	„	Charu Krista	Basirhat	..	..	Basirhat	..	do	..	..	Merchant.
1515	„	„	Chuni Lal	Jaynagar	..	..	Gocharan	..	do	..	..	Zamindar.
1516	„	„	Sita Prosad	Sonarpore	..	..	Jagatdal	..	do	..	..	Landholder and Municipal Commissioner.
1517(S)	„	„	Gunendra Nath	Hasnabad	..	..	Taki	..	do	..	..	Zaminder.
1518	„	„	Jatindra Nath	Basirhat	..	..	Basirhat	..	do	..	..	Landholder.
1519	„	„	Khagendra Nath	Behala	..	..	Barisa	..	do	..	..	Clerk, Customs House, Calcutta.
1520	„	„	Lalit Mohan	Beliaghata	..	..	98, Narikeldanga North Road	..	do	..	..	Contractor.

Serial No.	Name.	Thana.	Place of abode—Village, road or street.	Nationality	Quality or occupation.
	R				
1521	Ray Chaudhuri, Mahatap Chandra	Hasnabad ..	.. Saidpur	Hindu	Zamindar.
1522	„	Nalini Mohan Bhowanipore ..	.. 10, Rani Sankari Lane ..	do	Overseer.
1523	„	Nirode Kali .. Hasnabad ..	.. Taki	do	ditto.
1524(S)	„	Nirmal Kumar ditto ..	.. ditto	do	ditto.
1525	„	Probodh Kumar Baruipur ..	.. Baruipur	do	Zamindar.
1526	„	Probodh Kumar, II ditto ..	.. Baruipur old house	do	ditto.
1527	„	Profulla Nath Cossipore ..	.. 17/1, Shama Ch Mitra Lane ..	do	ditto.
1528	„	Rajendra Lal Behala ..	.. Barisa	do	Contractor.
1529	„	Rakhal Chandra, BA .. Cossipore ..	.. 8, Kali Charan Sett Lane ..	do	Landlord.
1530	„	Ramendra Kumar Baruipur ..	.. Baruipur	do	Zamindar.
1531	„	Sachindra Nath Hasnabad ..	.. Taki	do	ditto.

1532	„	Sachi Bilas	..	Behala	..	..	Bonomali Naskar Road	..	do	..	.. Assistant Manager, "Amrita Pazar Patrika."
1533	„	Sibpado	..	do	..	..	Barisa	..	do	..	.. Works in the Drawing Office, Survey of India, 13, Wood Street, Calcutta.
1534	„	Sita Das	..	Sonarpur	..	..	Jagatdal	..	do	..	.. Landholder.
1535	„	Srish Chandra		Hasnabad	..	..	Jalapur	..	do	..	.. Talukdar.
1536	„	Tarak Das	..	Baruipur	..	..	Baruipur P O ..	..	do	..	.. Zamindar, Kally Villa, Baruipur.

S

1537	Sadhukhan, Benode Bihari		..	Baraset	..	..	Baraset	..	Hindu	..	.. Trader.
1538	„	Bhuban Chandra		Watgunge	..	..	27, Orphangange Road	..	do	..	.. Merchant.
1539	„	Sibchandra	..	Sandeshkhali	..	..	Hatgachha ..	..	do	..	.. President Panchayat.
1540	„	Atul Chandra	..	Tollygunge	..	..	23, Russa Road, South	..	do	..	.. Mill-owner.
1541	Sadhan, Gour Mohan		..	Bijpore	..	..	Bijpore	..	do	..	.. Honorary Magistrate and Merchant.
1542(S)	Sahebzada Monir Alum		..	Tollygunge	..	..	1, Prince Anwar Sah Road	..	Muhammadan	..	Zamindar.
1543	Santra, Bhabataran		..	Hasnabad	..	..	Amlani	..	Hindu	..	.. Landholder.

Serial No.	Name.	Thana.	Place of abode—Village, road or street.	Nationality.	Quality or occupation.
	S				
1544	Shaikh Aftabuddin Ahamed ..	Sagore ..	.. Village Mandertola	Muhammadan ..	Landholder.
1545	„ Golap Ali	Amdanga ..	.. Baichgacha..	do	ditto.
1546	„ Abdul Rahaman ..	Metiabruz ..	.. P O Bartola, Sheikpara-Karbala Road, Bartola. ..	do	Owner of a tailoring business and clerk, B N Railway.
1547(S)	„ Abdus Sattar ..	Watgunj ..	.. 16, Mohan Chand Road ..	do	Model School, Kidderpore.
1548	„ Ahmed Ali	Nawpara ..	.. Ichapore	do	Clerk, Ichapore Rifle Factory.
1549	„ Esharath Hossain ..	Bhangore ..	.. Saihati	do	Landlord.
1550	„ Khoda Bux ..	Beniapukur ..	.. 4-1, Tantibagan Lane	do	Contractor.
1551	„ Kala Chand ..	Amdanga ..	.. Baichgacha	do	Landholder.
1552	„ Makshed Ali ..	Maheshtala ..	.. Mamenpur, P O Maheshtala ..	do	Clerk, office of the Superintending Engineer, South-Western Circle, Imperial Secretariat Buildings.
1553	„ Odiatulla	Baraset ..	.. Kazipara	do	Landholder. Employee in the Office of Chief Inspector of Boilers, Bengal, Bihar, Orissa and Assam, at 40-1-A, Free School Street, Calcutta.
1554	„ Rafiq Ahmed ..	Haroa ..	.. Haroa	do	Landholder.
1555	„ Rasul Bux	Barrackpore ..	.. Sadar Bazar	do	Tenure-holder, Contractor and Cantonment Member.
1556	„ Tuzammal Hossain ..	Ballygunge ..	.. 48, Jhowtola Road	do	Landholder

1557	„	Golam Rahman	..	Hasnabad	..	..	P O Hasnabad	..	..	do	..	.. ditto.
1558	„	Golam Sarwar	..	Deganga	..	..	Parulia	..	..	do	..	.. ditto.
1559	„	Khoda Newaj	..	Basirhat	..	..	Nehalpore village, P O Dhanyakuria			do	..	.. ditto.
1560	„	Md Redwan	..	ditto	..	..	Basirhat	..	..	do	..	.. ditto.
1561	„	Meher Ali	..	Kulpi	..	..	Kalitola, P O Kulpi	..	..	do	..	.. ditto.
1562	„	Maniruddin Ahmad	..	Beniapukur	..	..	1, Hajee Lane	..	..	do	..	.. Service-holder.
1563	„	Wahed Buksh	..	Tollygunge	..	..	37, Prince Anwar Sah Road		..	do	..	.. Landlord.
1564(S)	„	Hormujali, BA	..	Kulpi	..	..	Kalitola	..	..	do	..	.. Landholder.
1565	„	Mahabur Rahaman	..	Baduria	..	..	Baduria	..	..	do	..	.. Naib of the Laha Estate.
1566	„	Mahammad Sakoor	..	Chitpore	..	..	62, Barrackpore Trunk Road		..	do	..	.. Clerk, Port Commissioners, Traffic Department, P T Ry, Bagbazar.
1567	„	Nur Hossain	..	Deganga	..	..	Village Kaliani, P O Hadipore		..	do	..	.. Landholder.
1568	„	Amir Ali	..	Baranagar	..	..	Neogi Para	..	..	do	..	.. Clerk.
1569	S A F Quaderi	..	..	Baliaghata	..	..	7A, Motilal Sen Lane	..	..	do	..	.. Landlord.
1570	Sheik Sahiruddin	..	..	Deganga	..	..	Village Parulia	..	..	do	..	.. Landholder.
1571	Saiyid Habibur Rahaman	..	..	Manicktala	..	..	3, Muraripukur Lane	..	..	do	..	.. Landholder and clerk.
1572	„	Manzur Ali	..	Basirhat	..	..	Sainpala	..	..	do	..	.. Landlord.
1573(S)	„	Nazra Moslem	..	Deganga	..	..	Bhaslia, P O Deganga	..	..	do	..	.. Clerk, High Court, and Landholder.
1574	„	Mehdi Ali	..	Basirhat	..	..	Sainpala	..	..	do	..	.. Landholder.
1575	„	Montaj Hossain	..	Bijpore	..	..	Kanchrapara	..	..	do	..	.. Teacher.
1576	„	Hossain Ertiza	..	Basirhat	..	..	Basirhat	..	..	do	..	.. Landholder and Honorary Magistrate.

Serial No.	Name.	Thana.	Place of abode—Village, road or street.	Nationality.	Quality or occupation.
	S				
1577	Samanta, Ashutosh	Cossipore	21, Kedar Das Lane	Hindu	Contractor and Landholder.
1578	„ Krishna Mohan	Budge-Budge	Senpukur, P O Budge-Budge	do	Teacher.
1579	„ Rashik Lal	Bhowanipore	29, Haris Chatterjee Street	do	Merchant.
1580	„ Gosain Das	Budge-Budge	Kalinagar, P O Bawali	do	Master, Bawali School.
1581	Sandilya, Romesh Chandra	Sagore	Ghoramara, P O Muriganga	do	Naib of the grantee.
1582	Samaddar, Akshoy Kumar	Basirhat	Dhanyakuria, P O Dhanyakuria	do	Landholder, Merchant and Proprietor of Rice Mill.
1583	Sanyal, Charu Chandra	Baduria	Arbelia	do	Landholder.
1584	„ Satis Chandra	Cossipore	12, Gour Sundar Sett Lane	do	Contractor and Landholder.
1585	Sapui, Jasimuddin	Budge-Budge	Banjanheria	Muhammadan	Merchant and Commissioner, Budge-Budge Municipality.
1586	„ Wahed Ali	ditto	Joychandipur	do	Landholder.
1587	Sardar, Md Naruddin	Hasnabad	Kalootola	do	ditto.
1588	„ Hamijuddin	Sarupnagar	Bithari	do	Teacher, Hakimpur M E School.
1589	„ Narendra Nath	Protapnagore	Roypur	Hindu	Teacher, Kalikapur M E School.
1590	„ Md Sayem	Baduria	Faridkuti	Muhammadan	Landholder.

1591	„	Montaj Ahmed	Haroa	Kharabala	do	Landholder and President Panchayat.
1592	„	Md Mofizuddin Ahamed	Sarupnagar	Vill Boyerghata, P O Bithari	do	Landholder.
1593	„	Ismail	ditto	Bithari	do	Landholder and President Panchayat.
1594(S)	„	Khoda Bux	Hasnabad	Bhabia	do	School Master.
1595	„	Ismail	ditto	Kalutala	do	Landholder.
1596	„	Bissumbhor	Kakdwip	Tapakhali, Lot No. 10, P O Kakdwip.	Hindu	ditto.
1597	„	M Kinu	Hasnabad	Sandelirbil	Muhammadan	ditto.
1598	„	Asiruddin	Sandesh Khali	Kalinagore, P O Sandesh Khali	do	President Panchayat and Landholder.
1599	Sarnakar,	Kristo Lal	Watgunge	1, Rang Lal Street	Hindu	Merchant.
1600	Sarkar,	Amar Nath	Magrahat	Mohanpur	do	Landholder.
1601	„	Bankim Bihari	ditto	Peali, P O Burul	do	Landholder and Money-lender.
1602(S)	„	Bhola Nath, BA	Bhowanipore	11, Kalidas Patitandi Lane	do	Merchant.
1603(S)	„	Bidhu Bhusan	Beliaghata	69, Beliaghata Main Road	do	Zamindar and Municipal Commissioner, Manicktala Municipality.
1604	„	Bhudeb Chandra	Haroa	Dhuturdaha	do	Zamindar.
1605	„	Benode Behari	Alipore	6-V, Aftab Mosque Lane	do	Typist, Calcutta Corporation.
1606	„	Bepin Behari	Haroa	Haroa P O	do	Head Master, M E School, Haroa.
1607	„	Bepin Behari	Falta	Mala, P O Falta	do	Landholder.

Serial No.	Name.	Thana.	Place of abode—Village, road or street.	Nationality.	Quality or occupation.
	S				
1608	Sarkar, Prafulla Chandra ..	Magrahat ..	.. Benipur	.. Hindu ..	.. Clerk.
1609	„ Bepin Chandra ..	Haroa ..	.. Dhuturdaha ..	.. do ..	.. Zamindar.
1610	„ Ganapati	Beliaghata ..	.. 69, Beliaghata Main Road ..	do ..	.. ditto.
1611(S)	Rai Saheb, Harendra Krishna (Deb).	Falta ..	.. Mala, P O Falta ..	.. do ..	.. Landholder.
1612	Sarkar, Harendra Nath ..	Barrackpore ..	.. Manirampore ..	.. do ..	.. 1st Assistant Teacher, D P H E School, Barrackpore.
1613	„ Haripada	Cossipore ..	.. 103, South Sinthi Road ..	do ..	.. Retired Traffic Supdt, E B Ry.
1614	„ Indu Bhusan ..	Bhowanipore ..	.. 43-A, Chaulpatty Road ..	do ..	.. Clerk, High Court.
1615	„ Jatindra Nath ..	Haroa ..	.. Minakhan, p-s Minakhan ..	do ..	.. Supervisor, Port Canning Land Improvement Co.
1616	„ Jatish Chandra ..	Hasnabad ..	.. Thuba, P O Taki ..	.. do ..	.. Landholder.
1617	„ Jogendra Nath ..	Dum-Dum ..	.. Dakhin Duari ..	.. do ..	.. Municipal Commissioner and Landholder.
1618(S)	„ Krishna Chandra ..	Budge-Budge ..	.. Shampur	.. do ..	.. Common Manager, Sarkar's Estate, Shampur, Assistant Secretary, Pran Krishna H E School, Budge-Budge.
1619	„ Krishna Chaitanya ..	Barasat ..	.. Barasat	.. do ..	.. Teacher, Barasat Govt School.
1620	„ Kunja Bihari ..	Alipore ..	.. 6-A, Aftab Mosque Lane ..	do ..	.. Draftsman.

1621	„	Manindra Nath ..	Bhowanipore ..	..	13 Asutosh Mukherjee Road, c/o Sarkar Brothers.	do ..	..	Merchant and Landholder.
1622	„	Kunja Behari ..	Budge-Budge ..	..	Kalipur	do ..	..	Landholder.
1623	„	Nalini Bihari ..	Baraset ..	..	Kuberpore	do ..	..	Clerk and Municipal Commissioner.
1624	„	Rev Nrityа Gopal ..	Beniapukur ..	..	9-3, Hatibagan Road ..	Christian	..	Minister, Methodist Episcopal Church.
1625	„	Nibaran Chandra ...	Manicktala ..	..	2, Gurudas Dutta Garden Lane, Santi Rice Mill.	Hindu ..	..	Merchant.
1626(S)	„	Panchanan ..	Kulpi ..	..	Kamerchalk	do ..	..	Head Master, Kulpi M E School.
1627	„	Prakash Chandra, BA ..	Budge-Budge ..	..	Shampur	do ..	..	Assistant Teacher, P K H E School, Budge-Budge.
1628	„	Santosh Kumar ..	Bistupur ..	..	Udairampur	do ..	..	Railway employee.
1629	„	Sarat Chandra ..	Bhowanipore ..	..	10, Kalidas Patitandi Lane ..	do ..	..	Clerk, Imperial Bank of India.
1630	„	Satya Kinkar ..	Bijpore ..	..	E B Ry Colony, Bijpore ..	do ..	..	Superintendent, Dy Auditor's Office, E B Ry, Kanchrapara.
1631	„	Shama Prasonno, BT ..	Diamond Harbour	..	Diamond Harbour	do ..	..	Head Master, Diamond Harbour H E School.
1632	„	Tincowri	Budge-Budge ..	..	Shampur	do ..	..	Clerk, Controller of Currency Office, Calcutta.
1633	„	Upendra Nath ..	ditto ..	..	Alampur	do ..	..	Landholder.
1634	Set,	Hari Charan ..	Amdanga ..	..	Amdanga	do ..	..	ditto.
1635	Sawoo,	Pulin Behari ..	Basirhat ..	..	Dhankuria	do ..	..	Zamindar.
1636(S)	„	Sarat Chandra ..	ditto ..	..	ditto	do ..	..	ditto.

Serial No.	Name.	Thana.	Place of abode—Village, road or street.	Nationality.	Quality or occupation.
	S				
1637	Seal, Surendra Nath	Bhowanipore	3, Indra Roy Road	Hindu	Businessman.
1638(S)	Sen, A C	Tollygunj	P 400, Russa Road	do	Engineer.
1639(S)	„ Abani Bhusan	Bhowanipore	30-3, Chandra Chatterji Street	do	Superintendent, Satya Bhama Girls' School.
1640	„ Akhoy Kumar	Beniapukur	22, Jannagore Road	do	Landholder.
1641	„ Amulya Krishna	Bhowanipore	23, Gobinda Ghosal Lane	do	Clerk, India Company, Ltd.
1642	„ Bama Charan	Budge-Budge	Telari, P O Burul	do	Clerk and President-Panchayat of Union No. XI.
1643	„ Basanta Kumar	Magrahat	Mollerchak, P O Magrahat	do	Service-holder.
1644	„ Basanta Kumar	Baraset	Purbapara, P O Baraset	do	Assistant Director of Public Instruction.
1645	„ Dhirendra Nath	Magrahat	Multi	do	Clerk.
1646	„ Mati Lal	Titagarh	Charnock, Bowbazar	do	Government Servant.
1647(S)	„ Narendra Nath, BSc	Dum-Dum	Dum-Dum Cantonment	do	Landholder and Vice-Chairman, Dum-Dum Municipality.
1648(S)	„ Dr Nikhil Ranjan	Ballygunge	2, Ritchie Road	do	Professor, College of Science. Exempted from attending Sessions Court between May and November.
1649	„ Norendra Nath	Bistupur	Bistupur H E School	Christian	School Master.

1650	„ Promotha Nath, BA	.. Entally	..	.. 3, Palmer Bazar Road ..		Hindu ..	..	Assistant Accountant, Calcutta Corporation.
1651(S)	„ S C ..	.. Ballygunge	..	.. 42-1, Ritchie Road ..	..	do ..	..	Landlord.
1652	„ Satis Chandra ..	Naihati	..	.. Barada Road ..	..	do ..	..	Bank Accountant.
1653(S)	„ Satya Kinkar, BA ..	Rajarhat	..	.. Bishnupore ..	..	do ..	..	Head Master, Bishnupore H E School.
1654	„ Susarmoy	Baranagar	..	.. Palpara	..	do ..	..	Landholder.
1655(S)	„ Subodh Chandra, MA ..	Tallygunge	..	.. P 220, Ballygunge Avenue	..	do ..	..	Professor, Presidency College.
1656	„ Tanu Lal	Watgunge	..	.. 46, Circular Garden Reach Road	..	do ..	..	Merchant.
1657(S)	„ Upendra Lal ..	Ballygunge	..	.. 36, Ballygunge Circular Road	..	do ..	..	Superintendent, Vaccination Depôt, Calcutta Corporation.
1658(S)	Sen Gupta, Abani Ranjan, BA, BT.	Basirhat	..	.. Basirhat ..	..	do ..	..	Assistant Head Master, Taki H E School.
1659	„ Bankim Chandra..	Manicktala	..	.. 67, Telingabagan Lane	..	do ..	..	Contractor.
1660	„ Benoy Kumar ..	Diamond Harbour	..	Village Kolatola ..	..	do (Boidy)	..	....
1661(S)	„ Monaranjan, BA,BT	Entally	..	.. 3, Palmer Bazar Road	..	do ..	..	Teacher, Christ Church School.
1662	„ Satis Chandra, BA,BT.	Alipore	..	.. 3-A, Pitambar Ghattuck Lane	..	do ..	..	Assistant Head Master.
1663	„ Surendra Nath ..	Dum-Dum	..	.. Nager Bazar ..	..	do ..	..	Municipal Overseer.
1664	„ Susil Kumar ..	Garden Reach	..	.. 72-3-3, Garden Reach Road	..	do ..	..	Assistant Shed Foreman, Port Commissioners.

Serial No.	Name.	Thana.	Place of abode—Village, road or street.	Nationality.	Quality or occupation.
	S				
1665	Sha, Salik Prosad	Barrackpore	Sadar Bazar	Hindu	Landholder.
1666	„ Kali Prasad	Dum-Dum	Dum-Dum Cantonment	do	Merchant.
1667	Shaha, Bholanath, BA	Barrackpore	Sadar Bazar, Gola Mehal	do	Graduate.
1668	„ Ashutosh	Behala	Kamarpara	do	Merchant.
1669	„ Kalidas	Baruipur	Baruipur, Suripara	do	Landholder.
1670	„ Lalit Mohan	Bhowanipore	71, Kalighat Road	do	Timber Merchant.
1671	„ Ramprosad	Jagatdal	Jagatdal	do	Municipal Commissioner.
1672	Shaw, Jogeswar	Barrackpore	Sadar Bazar	do	Wine Merchant.
1673	„ Lakhi Prosad	ditto	Orderly Bazar	do	Clerk, District Engineer's Office, 24-Parganas.
1674(S)	„ Manaranjan, BA	Bistupur	Bistupur	Christian	Assistant Teacher, Bistupur Mission School.
1675	„ Nirode Chandra	Baranagar	Suripara, Baranagar	Hindu	Trader.
1676	„ Radhika Mohan	Beliaghata	51, Beliaghata Main Road	do	Landholder.
1677	„ Ram Prosad	Barrackpore	Barrackpore Sadar Bazar	do	Banker.
1678	„ Sakhi Charan	Hasnabad	Makhalgacha	do	Ganthidar and Member, P union.
1679	Shahji Mahammed (Shahaj)	Baraset	Panihara	Muhammadan	Landholder.
1680	Sastri, Panchanan	Jagatdal	Bhatpara	Hindu	Pandit.

1681	Simlai, Nalini Mohan	..	Amdanga	..	..	Bodai	..	..	..	do	..	..	Landholder.
1682	Singha, Dhirendra Nath	..	Mathurapur	..	..	Mathurapur	..	..	..	do	..	..	ditto.
1683	„ Basanta Kumar	..	Canning Town	..	..	Nebookhali	..	..	..	do	..	..	ditto.
1684(S)	„ Jogendra Nath	..	Beliaghata	..	..	82C, Charakdanga Road	..	..	..	do	..	..	Merchant.
1685	„ Kunja Bihari	..	Mathurapur	..	..	Mathurapur P O	..	..	..	do	..	..	Landholder.
1686	„ Manindra Nath	..	ditto	..	..	ditto	..	..	..	do	..	..	Assistant Teacher, Mathurapur H E School and Landholder.
1687	„ Nabin	..	..	Kakdwip	..	..	Madhabnagar, Lot No. 9, P O Kakdwip.			do	..	..	Landholder.
1688	Siddique, Mozammel Hoque	..	Baduria	..	..	Khashpur, P O Jadurhati	..	Muhammadan	..	ditto.			
1689	Wawesi Wahed Baksh	..	Beliaghata	..	..	14, Maharani Swarnamoyee Road	..	do	..	..	Hide Merchant.		

Serial No.	Name.	Thana.	Place of abode—Village, road or street.	Nationality.	Quality or occupation.
	S				
1690	Singha, Surendra Nath	Chitpore	25A, Ram Krishna Mukherji Road, Tala.	Hindu	Merchant.
1691(S)	Sinha, Pulin Krishna, BA	Nawpara	Ichapore Park	do	Assistant Cashier, Ichapore Rifle Factory.
1692	Singh, Kapur Birdi	Tollygunge	P 230-1, Russa Road	do	Employee in Khalsa Syndicate.
1693	„ Ajaib	Bhowanipore	35, Goaltuli Road	do	Manager, Khalsa Motor and General Trading Co.
1694	„ Mati Lal	Canning	Kalikatala 2nd portion	do	Landholder.
1695	„ Surendra Nath	Bistupur	Sukdebpur	do	ditto.
1696(S)	Some, Ram Gopal, BSC	Chitpore	32-1, Khelat Babu's Lane	do	Head Master, Areadah H E School.
1697	Sur, Panchanan	Bijpore	Jettia	do	President, Jettia Majhipara Union Board.

1698(S)	„ Sarat Chandra	Khardah	Patulia Bandipore	do		Government Pensioner.
1699	„ Rajendra Lall	Cossipore	6, East Uttarpara Lane	do		Assistant Manager, Estate of late Gopeswar Dutta, Phulbagan.
1700	Sikari Mujibar Rahaman	Hashnabad	Bhowanipore	Muhammadan		Landholder and President Panchayat.
1701	Smrititirtha Kavyatirtha Boloram.	Beejpore	Beejpore	Hindu		Head Pandit, Harent H E School, Beejpore.

T

1702	Tarafdar, Bhupendra Nath	Habra	Malikberia	Hindu		Landholder.
1703	„ Jitendra Nath	Deganga	Jhikra, P O Hadipur	do		ditto.

U

1704(S)	Upadhyay, Benode Behari	Baraset	Jagulia, P O Chota Jagulia	Hindu		Clerk, Grand Hotel, Calcutta.
1705	„ Jnanendra Nath	Magrahat	Rangilabad	do		Landholder.
1706	„ Panchanan	ditto	Rajballavpur, P O Rangilabad	do		Jotedar.
1707(S)	Venkateswaran, S	Bhowanipore	23-D, Mohendra Road	do (Madrasi)		Examiner of Patents.

24-Parganas Collectorate,
The 20th February 1935.

S. N. Roy,
Additional Collector, 24-Parganas.

List of Special Jurors for the year 1935.

It is notified that the objections to the following list of Special Jurors for the district of 24-Parganas for the year 1935 will be heard and determined by the Sessions Judge and the Collector of the district at the Sessions Court, Alipore, at 12 noon, on 6th April 1935.

Serial No.	Name.	Thana.	Place of abode—Village, road or street.	Nationality.	Quality or occupation.
	A				
1	Ara, A G	Manicktala	15, Canal East Road	American	Manager, J C Galstaun, Esq.
2	Augier, C S	Chitpore	13, Kali Prasanna Singh Road	Anglo-Indian	Manager, Bengal Hydraulic Press.
	B				
3	Baker, W H	Watgunge	40, Ekbalpur Road	European	Assistant, Graham Co's Shipping Department.
	C				
4	Cooper, G	Dum-Dum	Dum-Dum, 24-Parganas	European	Manager, Gramophone Co.
	D				
5	Debri, B	Entally	1, Canal Street	European	Assistant, R S N & Co.
	E				
6	E Little Jone	Jagatdal	Anglo-India Middle Mill	European	Manager.
	F				
7	Finlay, W	Budge-Budge	Kulipur, P O Achipur	European	Manager, Orient Jute Mill.

8	Gahan, E C J ..	.. Garden Reach ..	.. 15, Garden Reach Road	.. European	..	Commercial Traffic Manager, B N Ry.
9	Gay, H E ..	.. Entally ..	.. 14-1, Convent Road ..	.. Anglo-Indian	..	Assistant, Houghton & Sons.
10	G. M. Martine ..	.. Jagatdal ..	.. Reliance Jute Mill, Bhatpara	.. European	..	Manager.
	H					
11	Hawkins, E K ..	.. Garden Reach ..	.. 11, Garden Reach Road	.. European	..	Chief Accountant, Chief Engineer's Office, B N Ry.
12	Henderson, W M ..	.. Baranagore ..	.. Marshall Sons & Co. ..	.. do ..	..	Works Manager.
	J					
13	Jellicoe, J J ..	.. Entally ..	.. 14-1, Convent Road ..	.. Anglo-Indian	..	Engineer.
	K					
14	Kaddie, P ..	.. Tittagarh ..	.. Kinnison Jute Mill ..	.. European	..	Manager and Honorary Magistrate.
15	Kinnear, A R ..	.. Jagatdal ..	.. Jagatdal	.. do ..	..	Assistant Manager, Anglo-Indian Jute Mill, No. 4.
	L					
16	Lancaster, S Percy	.. Alipore ..	.. 1, Alipore Road ..	.. European	.	Secretary, Agricultural and Horticultural Society of India.
17	Leslie, J H ..	.. Titagarh ..	.. Titagarh Mill, No. 1 ..	.. do ..	..	Honorary Magistrate and Manager, Titagarh Mill, No. 1.
	M					
18	Mackenzie, E F ..	.. Baranagore ..	.. Kamarhati Jute Mill ..	.. European	..	Mill Manager and Honorary Magistrate.
19	Melvill, A ..	.. Garden Reach ..	.. 43/1, Garden Reach Road	.. do	..	Sale Master, Clive Jute Mills.

Serial No.	Name.	Thana.	Place of abode—Village, road or street.	Nationality.	Quality or occupation.
	M				
20	Martin, S A C ..	.. Garden Reach ..	.. 75, Garden Reach Road	.. European	.. Assistant Auditor, B N Ry.
21	Milne, R ..	.. Titagarh ..	.. Empire Jute Mill ..	.. do ..	.. Manager.
	N				
22	Nicholson, R ..	.. Titagarh ..	.. Kelvin Jute Mill ..	.. European	.. Manager.
	P				
23	Page, J J ..	.. Budge-Budge ..	.. Lothian Jute Mill ..	.. European	.. Engineer.
	S				
24	Sabbage, E H ..	.. Garden Reach ..	.. 75, Garden Reach Road	.. European	.. Chief Clerk, Agent's Office, B N Ry.
25	Simpson, T ..	.. Jagatdal ..	.. Reliance Jute Mill ..	.. do ..	.. Manager.
26	Singleton, T ..	.. Cossipore ..	.. 24, Jheel Road ..	.. Anglo-Indian	.. Engineer, Calcutta Electric Supply Corporation, Limited.
	T				
27	Thoms, A K ..	.. Jagatdal ..	.. Authpur	.. European	.. Manager, Alliance Jute Mill, Jagatdal.
	W				
28	W C Brokless ..	.. Jagatdal ..	.. Kankinarah Paper Mill	.. European	.. Manager.

29	Abdul Aziz ..	.. Beliaghata ..	.. 92, Talpukhur Road ..	.. Muhammadan	..	Teacher, Calcutta Corporation Free Primary School.
30	Abdul Baseque (Dr)	.. Basirhat ..	.. Basirhat	.. do ..	..	Landholder and Member, District Board.
31	Abdul Gofur Siddique	.. Baduria ..	.. Kashpore ..	.. do ..	..	Landholder.
32	Abdus Samad ..	.. Beliaghata ..	.. 90, Narkeldanga North Road	.. do ..	..	Employee in the office of the Director of Industries, Bengal, at Free School Street, Calcutta.
33	Addi, Panchanan ..	.. Mathurapore / Alipore ..	.. Mathurapore Road / 8, Mayerpur Road ..	.. Hindu ..	..	Landholder and Merchant.
34	Ahmed, Makbul, BA	.. Beliaghata ..	.. 235B, Manicktala Main Road	.. Muhammadan	..	Head Master, Corporation Free Primary School.
35	„ Anisuddin	.. Dum-Dum ..	.. Gouripore	.. do ..	..	Vice-Chairman, North Dum-Dum Municipality.
36	„ Jasimuddin	.. Magrahat ..	.. Ramchandrapur, P O Earpore	.. do ..	..	Landholder and Honorary Magistrate.
37	„ Samiruddin	.. Entally ..	.. 24, Ismail Street ..	.. do ..	..	Teacher, Calcutta Madrassa.
38	„ T, Khan Bahadur	.. Ballygunge ..	.. 45, Shamsul Huda Road	.. do ..	..	Government Servant.
	B					
39	Ballabh, Gobinda Das	.. Beliaghata ..	.. 157, Beliaghata Main Road	.. Hindu ..	..	Clerk, Ralli Brothers.
40	„ Harendra Nath	.. Basirhat ..	.. Dhynakuria ..	.. do ..	..	Zamindar.
41	Banerji, Bankim Chandra	.. Watgunj ..	.. 5/1, Rama Nath Paul Road	.. do ..	..	Clerk, Mackinnon Mackenzie & Co.
42	„ Bhaba Sankar	.. Barrackpore ..	.. Manirampur, P O Barrackpore	.. do ..	..	Manager of the *Bengalee*.
43	„ Bhupendra Nath	.. Watgunj ..	.. 10B, Jagannath Sirkar Lane	.. do ..	..	Clerk, B N Railway.

Serial No.	Name.	Thana.	Place of abode—Village, road or street.	Nationality.	Quality or occupation.
	B				
44	Banerji, Beni Madhab ..	Bhowanipore ..	.. 24, Sankaripara Road ..	Hindu ..	.. Contractor.
45	„ Bepin Behari ..	Beliaghata ..	.. 14-1, Ram Mohan Roy Road ..	do ..	.. Clerk.
46	„ Jadu Nath ..	Baruipur ..	.. Garia, P O South Garia ..	do ..	.. Zamindar and President Panchayat.
47	„ Brajendra Kumar ..	Watgunj ..	.. 78, Diamond Harbour Road ..	do ..	.. Cloth Merchant.
48	„ Jogendra Nath, Rai Sahib.	Naihati ..	.. Banarjeepara, Naihati	do ..	.. Government Pensioner.
49	„ Kaliprasad ..	Khardah ..	.. Khardah	do ..	.. Professor, Bangabasi College.
50	„ Monomohan ..	Harowa ..	.. Minakhan Kutchuri	do ..	.. Superintendent, Port Canning & Co.
51	„ Naran Das ..	Beliaghata ..	.. 14, Biswas Nursery Lane ..	do ..	.. Engineer and Contractor.
52	„ Narendra Nath ..	Watgunj ..	.. 10 C, Jagannath Sirkar Lane ..	do ..	.. Government Dockyard.
53	„ Prosad Chandra ..	Ballygunge ..	.. 26, Ritchie Road	do ..	.. Merchant.
54	„ Promotha Nath ..	Sarupnagar	.. Charghat, P O Gobordanga ..	do ..	.. Zamindar.
55	„ Rasamay ..	Bhowanipore ..	.. 7/1, Chakraberia Road, South ..	do ..	.. Head Pundit, South Suburban School.
56	„ Satyendra Nath ..	Manicktala ..	.. 4, Nilambar Mukherji Street ..	do ..	.. Secretary, National Insurance Company.
57	„ Satya Das ..	Baliaghata ..	.. 17, Garpar Road	do ..	.. Landholder.
58	„ Satish Chandra ..	Khardah ..	.. Shibmandirpara ..	do ..	.. Retired Sub-Registrar.
59	„ Satish Chandra ..	Baruipur ..	.. Kalyanpur, P O Baruipur ..	dc ..	.. Zamindar, Honorary Magistrate and President Panchayat.

60	„	Siddheswar	..	Jagatdal	..	..	Narayanpur P O	..	do	..	..	Treasurer, Bhatpara Municipality.
61	„	Srikumar	..	Tollygunge	..	..	57, Janala Road	..	do	..	..	Educationist.
62	„	Surendra Chandra, MA		Beliaghata	..	..	30, Sastitola Road	..	do	..	..	Professor, Presidency College.
63	„	Surendra Nath, MA	..	Entally	..	..	2H, Uriapara Lane	..	do	..	..	Professor, Ripon College.
64	„	Tulshi Das	..	Bhowanipore	..	..	2, Russa Road	..	do	..	..	Merchant and Landholder.
65	Basu,	Anil Chandra, BSc	..	Alipore	..	..	3B, Jainuddin Mistry Lane	..	do	..	..	Teacher.
66	„	Bijay Bihari, BA	..	Magrahat	..	..	Dhamua	..	do	..	..	Teacher, Hadorai H E School, Baruipore.
67	„	Bhupendra Nath	..	Alipore	..	..	18, Gobinda Addya Road, Alipore		do	..	..	Government Pensioner.
68	„	Braja Nath	..	Beliaghata	..	..	12, Sitalatala Lane ..	..	do	..	..	....
69	„	Chuni Lal	..	Magrahat	..	..	Gokarni	..	do	..	..	Clerk, Messrs Bird & Co, Calcutta.
70	„	Jatindra Mohan	..	Baduria	..	..	Baduria	..	do	..	..	Honorary Magistrate.
71	„	Jogesh Chandra	..	Sonarpur	..	..	Rajpur	..	do	..	..	Chief Clerk, E B Ry, D T S. Office, Calcutta District, Sealdah.
72	„	Jyotish Chandra	..	Diamond Harbour		..	Kamarpole, P O Sarisa	..	do	..	..	Landholder.
73	„	Jyotish Chandra, MA	..	Bhowanipore	..	..	7, Kundu Road ..	..	do	..	..	Assistant Cashier, Central Bank.
74	„	Kumud Runjan, BA	..	Alipore	..	..	6B, Gobinda Addya Road	..	do	..	..	Landholder and Merchant.

Serial No.	Name.	Thana.	Place of abode—Village, road or street.	Nationality.	Quality or occupation.
	B				
75	Basu, Karali Charan ..	Watgunj ..	.. 16B, Circular Garden Reach Road..	Hindu ..	.. Clerk, Chief Engineer's Office, B N Ry.
76	,, Mahit Mohan ..	Ballygunj ..	.. 2, Marlin Park	do ..	.. Businessman.
77	,, Rabindra Nath ..	Beliaghata ..	.. 53, Talpukur Road	do ..	.. Translator, High Court.
78	,, Sadhan Kumar ..	Diamond Harbour	.. Kalagachia, P O Sarisa ..	do ..	.. Zamindar.
79	,, Santosh Kumar ..	Chitpore ..	.. 2, Paikpara Road ..	do ..	.. Landholder.
80	,, Sarat Chandra ..	Baduria / Beniapukur ..	.. Purna / 27, Linton Street	do ..	.. Zamindar.
81	,, Sarat Kumar, MSC ..	Jagatdal ..	.. Bhatpara	do ..	.. Degree-holder.
82	,, Shama Charan ..	Alipore ..	.. 17-1, Gopalnagar Road ..	do ..	.. Survey Head Clerk.
83	,, Subodh Chandra ..	Magrahat ..	.. Gokarni, P O Multi	do ..	.. Clerk, Merchants' Office.
84	,, Surendra Nath, BA ..	Budge-Budge ..	.. Sarangabad	do ..	.. Teacher, H E School, Sarangabad.
85	,, Surendra Nath, BA ..	Diamond Harbour	.. Kalagachia, P O Sarisa.. ..	do ..	.. Teacher, H E School, Sarisa.
86	,, Tarun Chandra ..	Shampukur ..	.. Tala North Suburban School, 1-2, Marhatta Ditch Lane ..	do ..	.. Head Master, Tala North Suburban School.
87	,, Trailakshya Nath, BA ..	Khardah ..	.. Panihati	do ..	.. Officer-in-charge, Bengal Chemical and Pharmaceutical Works.
88	,, Sailendra Bhusan ..	Sonarpore / Maniktala ..	.. Boral / 18, Badurbagan Street, Calcutta ..	do ..	.. Zamindar.
89	Bhattacharji, Bhudhar Chandra, MA.	Barrackpore ..	.. Manirampore	do ..	.. Teacher, Ripon Collegiate School.
90	,, Dwijendra Nath..	Baraset ..	.. Koyra	do ..	.. Landholder.
91	,, Jogendra Nath, BA.	Sonarpur ..	.. Rajpur	do ..	.. ....

92	„	Jnanendra Nath, MA.	Entally	..	..	29-2, Pottery Road	..	do	.. Teacher, Ripon Collegiate School.
93	„	Kalitosh	Naihati	..	..	Naihati	..	do	.. Landholder.
94	„	Kamal Krishna, MA.	Baruipur	..	..	Begumpore, P O South Garia	..	do	.. Head Master, Kalikapur H E School, P O South Garia.
95	„	Monju Gopal, MA..	Naihati	..	..	Naihati	..	do	.. Professor, Presidency College, Calcutta.
96	„	Nani Gopal	Diamond Harbour	..	..	Bardrone, P O Hatugunge	..	do	.. Landholder.
97	„	Narendra Nath	Habra	..	..	Nawpara	..	do	.. Clerk, Calcutta Corporation.
98	„	Rajendra Kumar, MA.	Diamond Harbour	..	..	Diamond Harbour	..	do	.. Assistant Teacher, Diamond Harbour H E School.
99	„	Satish Chandra	Basirhat	..	..	Dhalchita	..	do	.. School Master, Basirhat.
100	„	Sidheswar, BA	Baranagar	..	..	Ariadah	..	do	.. Assistant Head Master.
101	„	Shama Charan, Rai Bahadur.	Naihati	..	..	Kantalpara	..	do	.. Vice-Chairman, Bhatpara Municipality.
102	„	Sri Krishna Prasanna, BA, Kabyatirtha.	Haroa	..	..	Kholisadi 10, Jadu Bhattacharji Lane		do	.. Assistant Master, Hindu School, Calcutta.
103	„	Sudhir Nath, BA	Barrackpore	..	..	Ganti Manirampore, P O Barrackpore.		do	.. School Master, Ripon Collegiate School.
104	„	Surendra Nath, BSc.	Jagatdal	..	..	Bhatpara	..	do	.. Employee, Assessment Department, Corporation of Calcutta.
105	„	Bhuban Mohan	Behala	..	..	236, Old Tollygunj Road, Italghata, P O Tollygunj.		do	.. Head Clerk, Transportation Department, B N Ry.
106	Bhaduri, Upendra Nath		Cossipore	..	..	19, Gopal Chatterjee Road	..	do	.. Laboratory Assistant, Botany, Presidency College.

Serial No.	Name.	Thana.	Place of abode—Village, road or street.	Nationality.	Quality or occupation.
	C				
107	Chakladar, Haran Chandra, MA	Tollygunge C P	.. 24, Sahanagore Lane	.. Hindu ..	.. Professor, University College.
108	Chakrabartty, Ahibhusan, BSC	Beejpore ..	.. Beejpore	do ..	.. Teacher, Technical School, Kanchrapara.
109	„ Baman Das ..	Basirhat ..	.. Basirhat School Boarding ..	do ..	.. School Master, Basirhat H E School.
110	„ Indu Bhusan ..	Bhowanipore ..	.. 107, Ashutosh Mukherjee Road ..	do ..	.. Zamindar.
111	„ Jatindra Jiban ..	Diamond Harbour	.. Netra, P O Netra	do ..	.. School Master.
112	„ Jitendra Nath ..	Tollygunge C P ..	.. Plot 364, Rash Behari Avenue ..	do ..	.. Surveyor.
113	„ Kashi Nath ..	Shampukur ..	.. Tala North Suburban School, 1-2, Marhatta Ditch Lane ..	do ..	.. Senior Teacher, North Suburban School, Tala.
114	„ Nagendra Nath, BA.	Khardah ..	.. Rahrah	do ..	.. Head Master, Sodepur H E School.
115	„ Nilmani, MA ..	Sonarpur ..	.. Jagatdal	do ..	.. Professor, Presidency College.
116	„ Nripendra Nath, BSC	Protapnagore ..	.. Vill Kalikapur, P O Protapnagore ..	do ..	.. President, Kalikapur U B.
117	„ Panchu Gopal ..	Baranagar ..	.. Bon-Hooghly	do ..	.. Landholder and Chairman.
118	„ Sakti Pada ..	Beejpore ..	.. Kanchrapara Clerks' Colony ..	do ..	.. Chargeman, Loco Office.
119	„ Subodh Chandra	Bhowanipore ..	.. 65, Lansdowne Road	do ..	.. Head Assistant, District Health Office, No 4.
120	Chandra, Anukul Chandra, Rai Sahib.	Tollygunge (B P)	.. Dhakuria	do ..	.. Government Pensioner.
121	Chattarji, Benoy Krishna ..	Habra ..	.. Digra	do ..	.. Landholder.

122	Chattarji, B M	..	Ballygunge	..	..	1, Love Lock Place	..	..	do	..	..	Businessman.
123	„	Dharani Dhar	..	Behala	..	..	Pathakpara, Behala P O	..	do	..	..	Retired Accountant, Military Accounts Department.
124	„	Hari Charan	..	Watgunj	..	..	71-1, Mansatala Lane	..	do	..	..	Clerk, B N Ry Office.
125	„	Haripada	..	Dum-Dum	..	..	Kadihati	..	do	..	..	Auditor, A G-B Office (P W D), Calcutta.
126	„	Mahadeb, MA	..	Baranagar	..	..	Sagar Dutta Free H E School, Kamarhati.		do	..	..	Head Master.
127	„	Manmatha Nath	..	Baraset	..	..	Nibadhui	..	do	..	..	Landholder.
128	„	Moni Mohan	..	Ballygunge	..	..	44, Lansdowne Road	..	do	..	..	School Master.
129	„	Nibaran Chandra	..	Garden Reach	..	..	75-4, Garden Reach Road	..	do	..	..	Head Record-keeper, Chief Engineer's Office, B N Ry.
130	„	Mrinal Chandra	..	Baranagar	..	..	Ariadah	..	do	..	..	Clerk, Khardah Jute Mill.
131	„	Phani Bhuson	..	Bhowanipore	..	..	4, Gobinda Ghosal Lane	..	do	..	..	Honorary Magistrate, Alipore.
132	„	Prabodh Chandra, MA, F C S (Lond) & C		Beliaghata	..	..	27, Narikeldanga Main Road	..	do	..	..	Consulting Chemist and Proprietor, Scientific Supplies (Bengal) Co, Calcutta.
133	„	Rabindra Nath	..	Alipore	..	..	Bengal Forms Office, Alipore	..	do	..	..	Assistant Store-keeper.
134	„	Tarak Nath	..	Titagarh	..	..	Talpukur	..	do	..	..	Honorary Magistrate and Vice-Chairman, Titagarh Municipality.

Serial No.	Name.	Thana.	Place of abode—Village, road or street.	Nationality.	Quality or occupation.
	C				
135	Chaudhuri, Naran Chandra, BA.	Manicktala ..	.. 57, Manicktala Main Road ..	Hindu ..	.. Clerk, Bengal Secretariat, P W D.
136	,, Ramendralal ..	Diamond Harbour	.. Kalagachia	do ..	.. School Master.
137	,, Tara Nath ..	Naihati ..	.. Naihati	do ..	.. Rice Mill Overseer.
	D				
138	Das, Aghore Nath ..	Tollygunge ..	.. 17-1, Nepal Bhattacharji Street ..	Hindu ..	.. Superintendent, Secretary's Office, Calcutta Corporation.
139	,, Bhupendra Chandra ..	Bhowanipore ..	.. 99B, Kalighat Road	do ..	.. Professor, Presidency College.
140	,, Birendra Nath ..	Baduria ..	.. Peara	do ..	.. Head Master, Tentulia M E School.
141	,, Gosta Behari ..	Manicktola ..	.. 42-A, Boldeapara Road ..	do ..	.. Retired Assistant in the Office of Education, Health and Lands, Government of India.
142	,, Hari Das ..	Baniapukur ..	.. 6, Beniapara Lane	do ..	.. Assistant, Messrs Shaw, Wallace & Co.
143	,, Jananendra Nath, BA ..	Barrackpore ..	.. Sadar Bazar Gola Mahal ..	do ..	.. Teacher, Debi Prasad H E School.
144	,, Mr J N	Beliaghata ..	.. 57-4, Raja Dinendra Narain Street	do ..	.. Coal Merchant.
145	,, Bhut Nath	Kulpi ..	.. Gabberia	do ..	.. Head Master, Gabberia H E School.

146	Dutta, Bidya Das	Joynagar	Mazilpur	do	Zamindar and Member, Sadar Local Board.
147	„ Harendra Nath, BA	Bhowanipur	29, Allenby Road	do	Teacher, Paddapukur Institution.
148	„ Hirendra Nath	Chitpur	16, Paik Para Raja Monindra Road	do	Zamindar and author of miscellaneous books.
149	„ Kali Das	Joynagar	Majilpur	do	Zamindar.
150	„ Mahendra Nath, MA	Rajarhat	Narayanpore	do	Assistant, Administrator-General's Office.
151	„ Promode Kumar	Watgunj	29, Monshatolla Lane	do	Clerk, Calcutta Corporation.
152	„ Sarat Chandra, BA	Joynagar	Kuchelpara, Joynagar	do	Head Master, J M Training School, Joynagar.
153	„ Subodh Nath	Baruipur	Baruipur	do	Zamindar, Baruipur.
154	„ Sudhir Krishna	Joynagar	Mazilpur	do	Zamindar
155	Dey, Apurba Krishna	Entally	1-1, Palmer Bazar Road	do	Merchant.
156	„ Netai Hari, BA	Habra	Khatora, P O Gobardanga; at present 11B, Mohan Lal Street, Shambazar.	do	Shorthand Reporter.
157	„ Probodh Chandra, BA, BT	Beliaghata	Narikeldanga George High School	do	Head Master, Narikeldanga George High School.
158	„ Prasad Chandra	Beniapukur	2-B, Linton Street	do	Clerk, Burn & Co.
159	„ Rajendra Nath	Baraset	Koyra	do	Landholder.
160	„ Surendra Nath, BA	Cossipore	32, Ratan Babu's Ghat Road	do	Assessor, Cossipore-Chitpore Municipality.

Serial No.	Name.	Thana.	Place of abode—Village, road or street.	Nationality.	Quality or occupation.
	D				
161	Dey, Umesh Chandra ..	Canning ..	.. Canning Town ..	.. Hindu ..	.. Agent, and Principal Officer Port Canning and Land Improvement Company, Limited.
162	Deb, Jnanendra Nath, BA ..	Joynagar ..	.. Mazilpur ..	.. do ..	.. Assistant Head Master, Joynagar Institution.
163	„ Rohini Kumar ..	Manicktala ..	.. 56, Gouribari Lane ..	.. do ..	.. Manager, Bhowani Engineering and Trading Co.
164	Dhar, Jogesh Chandra, MA ..	Diamond Harbour	.. Hatuganj ..	.. do ..	.. Head Master, Hatuganj H E School.
	G				
165	Ganguli, Jamini Prakash ..	Beniapukur ..	.. 171, Lower Circular Road ..	Hindu ..	.. Zamindar.
166	„ N B ..	.. Ballygunge ..	.. 100, Lansdowne Road ..	do ..	.. Businessman.
167	„ N ..	.. Tollygunge ..	.. P183, Ballygunge Avenue ..	do ..	.. Service-holder.
168	Goswami, Khirode Mohan, BA.	Bhowanipore ..	.. 43, Lansdowne Road ..	.. do ..	.. Manager, Zamindari Estate.
169	Ghosh, Abhoy Kali, MSC ..	Beliaghata ..	.. 164, Manicktala Main Road ..	do ..	.. Chemist, Bengal Chemical and Pharmaceutical Works.
170	„ B C ..	.. Watgunj ..	.. 14, Hem Ch Street ..	.. do ..	.. Zamindar.
171	„ Banku Bihari, BA (Oxon), BSC (Cal).	Khardah ..	.. Bandipur ..	.. do ..	.. Zamindar and Merchant.
172	„ Bishnu Das ..	Basirhat ..	.. Basirhat ..	.. do ..	.. Assistant Secretary, Central Bank, Taki.

173	„	Basanta Kumar, BA	..	Behala	..	..	Shahapore	..	..	do .. .. Assistant, Accounts Department, Corporation of Calcutta, No 5, Corporation Street, Calcutta.
174	„	Chandi Prosad	..	Khardah	..	..	Bosepara, Khardah	..	..	do .. .. Government pensioner.
175	„	Chandra Kumar	..	Beliaghata	..	..	10, Ram Mohan Roy Road	..	do	.. .. Building Surveyor, Calcutta Corporation.
176	„	Jyotish Chandra	..	Ballygunge	..	..	35-10, Paddapukur Road	..	do	.. .. Businessman.
177	„	Nani Gopal, BA	..	Habra	..	..	Rajibpore	..	..	do .. .. Teacher, A V H E School.
178	„	Nirmal Chandra	..	Basirhat	..	..	Dhanyakuria	..	do	.. .. Head Master, Dhanyakuria H E School.
179	„	Phani Bhusan	..	Beliaghata	..	..	28-A, Raja Dinendra Narain Street		do	.. .. Clerk, Administrator-General's Office, Calcutta.
180	„	Pramatha Nath, BA, BT		Tollygunge	..	..	Mohajanpatty, Tollygunge	..	do	.. .. Teacher, Hare School.
181	„	Pulin Behari	..	ditto	..	..	15, Prince Anwar Sah Road	..	do	.. .. Contractor.
182	„	Surendra Nath	..	Jagatdal	..	..	Mulajore, P O Shamnagore	..	do	.. .. ditto.
183	„	Surendra Kumar	..	Maniktala	..	..	121, Maniktala Main Road	..	do	.. .. ditto.
184	Ghosal, Jogendranath		..	Baranagar	..	..	Ariadah	..	..	do .. .. Retired clerk.

Serial No.	Name.	Thana.	Place of abode—Village, road or street.	Nationality.	Quality or occupation.
	G				
185	Ghosal, Nripendranath ..	Beliaghata ..	.. 14-2-1, Bahir Mirzapur Road ..	Hindu ..	.. Broker, Andrew, Yule & Co.
186	„ Satya Mohan (Kumar)	Ekbalpur ..	.. 49-2, Circular Garden Reach Road, Bhukailas Garh.	do ..	.. Zamindar.
187	„ Satish Chandra ..	Khardah ..	.. Panihati	do ..	.. Teacher, T N H E School.
188	„ Profulla Chandra ..	Tollygunge ..	.. Jadabpur colony	do ..	.. Retired Subordinate Judge.
189	Guha, Rajendra Nath, BA ..	ditto ..	.. 39/2, Monaharpukur Road ..	do ..	.. Assistant Collector, Calcutta Corporation.
190	Gupta, Gopi Nath ..	Bhowanipore ..	.. 4-1, Mahes Chowdhury Lane ..	do ..	.. Superintendent, Zamindary Katchery.
191	„ R K	Garden Reach ..	.. 42, Garden Reach Road ..	Indian ..	.. Head Assistant, Kesoram Cotton Mills, Garden Reach.
	H				
192	Huq, Shamsul	Ballygunge ..	.. 81, Bundel Road	Muhammadan ..	Government pensioner.
193	„ Zahural	Basirhat ..	.. Basirhat	do ..	.. Landholder.
194	Haldar, Hara Lal, Rai Sahib	Budge-Budge ..	.. Haldarpara, Budge-Budge ..	Hindu ..	.. Chairman, Budge-Budge Municipality and Landholder.
195	„ Hara Mohan ..	Hasnabad ..	.. Dulduli	do ..	.. Head Master, Dulduli M E School.
196	„ N K	Barrackpore ..	.. Sadarbazar	do ..	.. Head Master, Debi Prosad H E School.
197	Hyder, Kamruddin ..	Beliaghata ..	.. 1, Kaiser Street ..	Muhammadan	.. Honorary Magistrate.

198	Jana, Priya Nath, BA	..	Hasnabad	..	..	Bishpur	..	..	Hindu	..	.. President-Panchayet.
199	„ Satish Chandra	..	Falta	..	..	Belsingh	..	..	do	..	.. Head Master, Mathura M E School.
	K									
200	Kanjilal, Probodh Chandra, MA		Cossipore	..	..	28, Rutton Babu Road		..	Hindu	..	.. Head Master, Park Institution, Shambazar.
201	Kantal, Bibhuti Bhusan, MA		Bistupur	..	..	Jhikarberia		..	do	..	.. Professor, Ripon College.
202	Kayal Bijoy Chandra	..	Falta	..	..	Sibpur, P O Shaipur		..	do	..	.. Medical practitioner and Landholder.
203	Kazi, Syed Golam Mohiuddin		Alipore	..	..	6, Mohesh Chandra Dutt Lane		..	Muhammadan		.. Head Assistant, Political Pension Office, Alipore.
204	„ M Md Abdul Kader	..	Baraset	..	..	Kazipara	..	..	do	..	.. Employee in the Office of the Controller of Currency, India, Calcutta.
205	„ M Anwaral Huq	..	ditto	..	..	ditto	..	..	do	..	.. P W D Office, Bengal Secretariat.
206	„ Nurul Huda	..	Titagarh	..	..	Anderson Road	..	..	do	..	.. Marriage Registrar.
207	Khan Jalaluddin	..	Garden Reach	..	..	Hata Rahomaddmole off Garden Reach Road.			do	..	.. Independent gentleman.
208	„ Mohendra Nath	..	Tollygunge	..	..	5D, Lake View Road		..	Hindu	..	.. Teacher.
209	Abdul Satter	..	Beliaghata	..	..	90, Narikeldanga North Road		..	Muhammadan		.. Hide Merchant.
210	Koley, Panna Lal, MSC	..	Cossipore	..	..	Uttarpara Lane	..	..	Hindu	..	.. Independent gentleman.
211	Khan Khalilar Rahman	..	Magrahat	..	..	Earpore, P O Rangilabad		..	Muhammedan		.. Landholder.
212	Kuar, Satish Chandra, BA	..	Bhowanipore	..	..	18, Iswar Ganguli Lane		..	Hindu	..	.. Zamindar.
213	Kundu, Bistupada	..	Entally	..	..	5, South Road, Entally		..	do	..	.. Timber Merchant.
	L									
214	Lall, Manilal, MSC	..	Dum-Dum	..	..	Kamarpara Road, Dum-Dum		..	Hindu	..	.. Landlord.

Serial No.	Name.	Thana.	Place of abode—Village, road or street.	Nationality.	Quality or occupation.
	M				
215	Maitra, Girish Chandra ..	Basirhat ..	.. Mirzapur	Hindu ..	.. Landholder
216	„ Jatindra Nath ..	Bhowanipore ..	.. 71, Haris Chatterjee Street ..	do ..	.. Teacher, Mitra Institution.
217	„ Kanti Chandra ..	Basirhat ..	.. Mirzapore	do ..	.. Landholder.
218	Mallik, Bijoy Krishna ..	Jagatdal ..	.. Kawgachi	do ..	.. Cloth Merchant.
219	„ Panchu Gopal ..	Bizpore ..	.. Kanchrapara	do ..	.. Head Master, Harnet H E School.
220	Mondal, Bhupesh Chandra ..	Falta ..	.. Keotkhanda	do ..	.. Landholder.
221	„ Lalit Mohan, BL ..	Bhangore ..	.. Bhangore	do ..	.. Assistant Head Master, Bhangore H E School, P O Bhangore.
222	„ Jatindra Nath, BA ..	Bistupur ..	.. Bakra	do ..	.. Teacher, Bakra H E School.
223	„ Pulin Behari ..	Diamond Harbour	.. Bardrone	do ..	.. Assistant Teacher, Diamond Harbour H E School.
224	„ Rajendra Nath ..	Bhowanipore ..	.. 91-B, Kalighat Road, P O Kalighat	do ..	.. Landholder, President and Service-holder. (Accountant, District Engineer's Office, district 24-Parganas.)
225	„ Rash Behari ..	Deganga ..	.. Kalsoor, P O Kalsoor	do ..	.. Landholder and Honorary Magistrate, Baraset.
226	„ Satis Chandra, BA ..	Kulpi ..	.. Gabberia H E School, P O Ghatiswara.	do ..	.. Assistant Teacher, Gabberia H E School.
227	Marik, Ganendra Nath, BA ..	Magrahat ..	.. Multi	do ..	.. Clerk, Coaching Office, E B Railway.
228	„ Sashibhusan ..	Ditto ..	.. Ditto	do ..	.. Landholder and Assistant Teacher, Multi P S Institution.
229	Maulvi Abdul Majid ..	Garden Reach ..	.. Paharpur Road	Muhammadan	.. Teacher, Mudiali M E School.
230	„ Kazimuddin Ahmed, BA BT.	Bhangore ..	.. Bhangore	do ..	.. Head Master, Bhangore H E School.

231	„	Golam Akbar	..	Barrackpore	..	..	Government High School, Barrackpore.	do	..	.. Head Maulvi.
232	„	Md Eshaque	..	Garden Reach	..	..	47, Ramnagore Lane	do	..	.. Assistant Teacher, Matiaburuz H E School.
233	„	A T M Moazzem	..	Basirhat	..	..	Basirhat	do	..	.. Honorary Magistrate.
234	„	Kafilar Rahim	..	Garden Reach	..	..	Garden Reach Road (Atabagh) ..	do	..	.. Head Master, Garden Reach Night School.
235	„	Jehan Ali, MA	..	Canning	..	..	Basanti P O	do	..	.. Landholder.
236	„	Syed Kurban Ali	..	Basirhat	..	..	Basirhat	do	..	.. Head Master, Basirhat Union Madrasha.
237	„	Kazi Abdus Samad, BA		Maniktala	..	..	19, Bagmari Road	do	..	.. Assistant, Bengal Secretariat, Agriculture and Industries.
238	„	Muhammad Musa	..	Basirhat	..	..	Nehalpur, P O Dhanyakuria ..	do	..	.. Vice-President, Dhanyakuria Union Board.
239	„	Muhammad Sufi	..	Maniktala	..	..	20, Cullimuddy Lane	do	..	.. Teacher, Calcutta Madrasah.
240	„	Saiyid Mukshed Ali Malique, MLC.		Tittagar	..	..	Talpukur	do	..	.. Landholder and Municipal Commissioner.
241	„	Saiyid Mokarram Ali, BA, BT.		Basirhat	..	..	Basirhat	do	..	.. Sub-Inspector of Schools, Diamond Harbour.
242	„	Nur Ahmed	..	Protapnagore	..	..	Chakberia	do	..	.. Deputy Superintendent, R Section, Appellate Side, High Court.
243	„	Sirajul Islam	..	Diamond Harbour		..	Diamond Harbour	do	..	.. Teacher, Diamond Harbour School.
244	Mazumdar, Harendra Kumar			Hasnabad	..	..	Taki	Hindu	..	.. Head Master, Taki Government H E School.
245	„	Sudhansu Bhusan		Sondeskhali	..	..	Goshaba	do	..	.. Manager, Goshaba Estate.
246	„	Nagendra Nath, BA.		Chitpur	..	..	18, Barrackpore Trunk Road, P O Cossipur.	.. do	..	.. Head Master, Raja Manindra Memorial H E School, Paikpara.

Serial No.	Name.	Thana.	Place of abode—Village, road or street.	Nationality.	Quality or occupation.
	M				
247	Mazumdar, Bijoy Ratna	Tollygunge	54, South End Park	Hindu	Bengali novel writer and author.
248	„ Mriganka Kumar	Chitpore	7, Kali Kumar Banerji Lane	do	Merchant.
249	„ Pramatha Bhusan	Basirhat	Basirhat	do	Zamindari Service.
250	„ Upendra Nath, BA	Dum-Dum	Kadihati, Dum-Dum	do	Head Master, Kadihati School
251	„ Indu Bhusan	Bhangore	Sastengachi, Rajarhat, Bishtupore	do	Landholder and President, Palerhat Union Board.
252	Mirza, Ansar Ali	Jorabagan	2, Gurudas Datta Garden Lane	Muhammadan	Port Trust Railway, Rathtala, Calcutta.
253	Mitra, Annada Prosad	Dum-Dum	Dum-Dum Cantonment	Hindu	Assistant, Orr, Dignam & Co.
254	„ Debendra Nath	Joynagore	Mitrapara, Joynagore	do	Retired Clerk.
255	„ Harendra Nath	Basirhat	Pipa	do	Landholder.
256	„ J C, Esq	Ballygunge	21/1B, Firn Road	do	Professor, Vidyasagar College.
257	„ Jnanendra Nath	Joynagar	Joynagar	do	Zamindar.
258	„ Mahim Chandra	Diamond Harbour	Bardrone, P O Hatuganj	do	School Master.
259	„ Nirmal Chandra	Dum-Dum	Dum-Dum Cantonment	do	Head Master, Mitra Institution.
260	„ Panchkori	Naihati	Naihati	do	Honorary Magistrate.

261	Mitter, P C, Dr ..	.. Beliaghata ..	.. 22A, Garpar Road ..	..	do ..	..	Professor, University College of Science. Exempted from attendance in Sessions Court from November to May.
262	„ Pulin Behari, BSC ..	Alipore ..	.. 85/A, Alipore Road ..	..	do ..	..	Chemist.
263	Mollah, Hossain ..	.. Metiaburuz ..	.. Bartala	..	Muhammadan ..	..	Contractor, Whiteaway, Laidlaw & Co, Ltd.
264	„ Azizur Rahaman ..	Kulpi ..	.. Dhola	..	do ..	..	Landholder.
265	Muhammad Azizuddin ..	Magrahat ..	.. Saligaria	..	do ..	..	Head Clerk, Calcutta Madrasah.
266	„ Hassem ..	Beliaghata ..	.. 19, Beliaghata Main Road	..	do ..	..	Merchant and M L C.
267	„ Noor, BA ..	ditto ..	.. 3, Gas Street ..	..	do ..	..	Ward Surveyor, Calcutta Corporation.
268	„ Shamshuzzaman	Tollygunge B P ..	.. Haltu ..	..	do ..	..	Landholder.
269	„ Yusuff ..	Garden Reach ..	.. 155, Paharpore Road ..	..	do ..	..	Clerk.
270	Mukbul Ali, BA ..	.. Baduria ..	.. Arsula, P O Baduria ..	..	do ..	..	Holds service in Calcutta Corporation, Accounts Department, Section 3.
271	Munshi Abdul Rasid ..	Maheshtala ..	.. Santoshpore ..	..	do ..	..	Clerk.
272	Mukharji, Amulya Charan ..	Behala ..	.. Muradpur	..	Hindu ..	..	Landholder.
273	„ Asutosh, BA ..	Baraset ..	.. Baraset	..	do ..	..	Law Student.

Serial No.	Name.	Thana.	Place of abode—Village, road or street.	Nationality.	Quality or occupation.
	M				
274	Mukharji, Bikash Chandra ..	Baraset ..	.. Baraset	Hindu ..	.. Service-holder, Calcutta Tramways.
275	,, Brajendra Nath, MA, BT.	Ballygunge ..	.. 38-2, Beltolla Road	do ..	.. Teacher.
276	,, Girindra Nath ..	Beliaghata ..	.. 78 & 79, Charakdanga Road ..	do ..	.. Coal Merchant.
277	,, Girindra Nath ..	Bhowanipore ..	.. 25, Haldarpara Road	do ..	.. Zamindar.
278	,, Hiranmay ..	Khardah ..	. Khardah	do ..	.. Clerk, Accountant-General Bengal's Office.
279	,, Khitiprasanna, BA..	Habra ..	.. Gobardanga	do ..	.. Zamindar.
280	,, Kristo Chandra ..	Bhowanipore ..	.. 269, Kalighat Road	do ..	.. 2nd Clerk, Survey Department, Calcutta Corporation.
281	,, Manmatha Nath ..	Maniktala ..	.. 173, Raja Dinendra Street ..	do ..	.. Engineer and Contractor.
282	,, Manuj Mohan, MA, BT.	Ballygunge ..	.. 38-2, Beltola Road	do ..	.. Teacher.
283	,, Nirode Chandra, BA, BT.	Naihati ..	.. Kantalpara..	do ..	.. Assistant Head Master, Bhatpara H E School.
284	,, Peari Mohan ..	Chitpur ..	.. Madhusudan Chatterjee Lane ..	do ..	.. Merchant.
285	,, Purna Chandra, BL	Baranagore / Bhowanipore ..	.. Victoria H E School, Baranagore	do ..	.. Working as Manager, Zamindary Estate, Baranagore.

286	,, Satish Chandra	Tollygunge	..	..	4-1, Raja Sita Ram Road	..	do	.. Landholder.
287	,, Shibendra Nath, BA	Basirhat	..	..	Basirhat	..	do	.. Merchant.
288	,, Surendra Nath, BA	Baruipur	..	..	Baruipur	..	do	.. Head Master, Baruipur H E School.
289	,, Probodh Chandra..	Tollygunj	..	..	Baisnabghata ..	..	do	.. Superintendent, General Section, Agent Office, E B Ry, Koylaghata Street.

N

290	Naskar, Hem Chandra ..	Beliaghata	..	..	72, Beliaghata Main Road	..	Hindu	.. Zamindar, Hony Magistrate and Councillor, Calcutta Corporation.
291	Nandi, Mathura Kanta ..	Barasat	..	..	Barasat	..	do	.. Head Master, Barasat Government School.
292	Neogi, Anil Chandra ..	Manicktala	..	..	56, Ultadingi Main Road	..	do	.. Read up to M A.
293	,, Bankim Chandra ..	Khardah	..	..	Batulia, Bandipur ..	..	do	.. Clerk, Messrs Bird & Co.
294	Neya, Sushil Chandra, BA, BL	Mathurapur	..	..	Mathurapur ..	..	do	.. Head Master.

P

295	Pal, Ashutosh, MA ..	Tollygunge	..	..	Kasba	..	Hindu	.. Professor.
296	,, Dhruba Nath ..	Manicktala	..	..	53, Badridas Temple Street	..	do	.. Manager of a rice mill.
297	,, Probhat Chandra, BA ..	Metiaburuz	..	..	Mudiali Road ..	..	do	.. Assistant, Remington Typewriter Co (India), Ltd.

Serial No.	Name.	Thana.	Place of abode—Village, road or street.	Nationality.	Quality or occupation.
	P				
298	Pal, Nagendra Nath, MA	Basirhat	Basirhat	Hindu	Head Master, Basirhat H E School.
299	,, Rajendra Nath, BA	Metiaburuz	Mudiali	do	Head Master, Turner Morrison H E School.
300	,, Sris Chandra	Entally	37, Ananda Palit Road	do	Head Master, Entally Academy.
301	Panday, Sarat Chandra	Bhangore	Bodra	do	Teacher, Bodra H E School.
302	Pramanik, Bata Kristo	Bhowanipore	57-1, Lansdowne Road	do	Zamindar.
303	Prodhan, Nirmal Chandra	Sarupnagore	Sagunia	do	Landholder.
304	Purkait, Jogendra Nath	Mathurapur	Mathurapur	do	ditto.
305	,, Suresh Chandra	ditto	ditto	do	Teacher, Mathurapur High School.
	R				
306	Rahaman, Abdur	Beliaghata	106, Narkeldanga Main Road	Muhammadan	Supervisor, Gordon & Co.
307	Ray, Amulya Nath	Deganga	Chakla	Hindu	Landholder.
308	,, Mr Bibhudan, MA, BT	Mograhat	Dhanghata, P O Mograhat	Christian	David Hare Training College, Ballygunge, Calcutta.
309	,, Bhusan Chandra	Bhowanipore	41, Sankaripara Road	Hindu	Reader, Govt of India Press, Calcutta.
310	,, Prafulla Kumar	Basirhat	Itinda	do	Landholder.

311	„ Sudhindra Nath, BA	..	Baduria	..	..	Punra	..	..	do	..	..	Zamindar.
312	„ Chaudhuri, Ashutosh	..	Bhangar	..	..	Budro	..	..	do	..	..	Landholder.
313	Roy Choudhury, Harendra Nath		Baranagar	..	..	Mathura Nath Chaudhury Lane, Baranagar.			do	..	..	ditto.
314	„ „ Nirmal Kumar.		Hasnabad	..	..	Taki	..	..	do	..	..	Zamindar.
315	„ „ Rakhal Chandra, BA		Cossipore	..	..	8, Kali Charan Sett Lane		..	do	..	..	Landlord.
	S											
316	Sardar, Khoda Bux	..	Hasnabad	..	..	Bhabia	..	..	..	Muhammadan	..	School Master.
317	Sarkar, Bidhu Bhusan	..	Beliaghata	..	..	69, Beliaghata Main Road		..	Hindu	..	..	Zamindar and Municipal Commissioner.
318	„ Bhola Nath, BA	..	Bhowanipore	..	..	11, Kalidas Patitandi Lane		..	do	..	..	Merchant.
319	Rai Sahib Harendra Krishna Deb		Falta	..	..	Mala, P O Falta	..	..	do	..	..	Landholder.
320	Sarkar, Krishna Chandra	..	Budge-Budge	..	..	Shampur	..	..	..	do	..	Common Manager, Sarkar's Estate, Shampur, and Assistant Secretary, P K H E School, Budge-Budge.
321	Shaik Abdus Sattar	..	Watgunj	..	..	16, Mohon Chand Road		..	Muhammadan		..	Model School, Kidderpur.

Serial No.	Name.	Thana.	Place of abode—Village, road or street.	Nationality.	Quality or occupation.
	S				
322	Shaik, Hormuj Ali, BA	Kulpi	Kalitola	Muhammadan	Landholder.
323	Shaw, Monoranjan, BA	Bistupur	Bistupur	Christian	Assistant Teacher, Bistupur Mission School.
324	Sahebzada Monir Alum	Tollygunge	1, Prince Anwar Sah Road	Muhammadan	Zamindar.
325	Sawoo, Sarat Chandra	Basirhat	Dhankuria	Hindu	ditto.
326	Sen, Abani Bhusan	Bhowanipur	30-3, Chandra Chatterjee Street	do	Superintendent, Satyabhama Girls' School.
327	„ A C	Tallygunge	P-400, Russa Road	do	Engineer.
328	„ Narendra Nath, BSC	Dum-Dum	Dum-Dum Cantonment	do	Landholder and Vice-Chairman, Dum-Dum Municipality.
329	„ Dr Nikhil Ranjan	Ballygunge	2, Ritchie Road	do	Professor, Science College. (Exempted from attending Sessions Court between November and May.)
330	„ S C	ditto	42-1, Ritchie Road	do	Landlord.
331	„ Subodh Chandra, MA	Tallygunge	P-220, Ballygunj Avenue	do	Professor, Presidency College.
332	„ Upendra Lal	Ballygunge	36, Ballygunge Circular Road	do	Superintendent, Vaccination Depôt, Calcutta Corporation.
333	Sen Gupta, Abani Ranjan, BA, BT.	Basirhat	Basirhat	do	Assistant Head Master, Taki H E School.
334	„ Monoranjan, BA, BT	Entally	3, Palmerdazar Road	do	Teacher, Christ Church School.

335	Sinha, Jogendra Nath	.. Beliaghata	..	.. 82C, Charakdanga Road	.. do	..	.. Merchant.
336	„ Pulin Krishna, BA	.. Nawpara	..	.. Ichapore Park ...	.. do	..	.. Assistant Cashier, Ichapore Rifle Factory.
337	Some, Ram Gopal, BSC	.. Chitpur	..	.. 32-1, Khelat Babu's Lane	.. do	..	.. Head Master, Ariadah H E School.
338	„ Sarat Chandra	.. Khardah	..	.. Patulia Bandipur ..	.. do	..	.. Government Pensioner.
339	Syed Nazre Moslem	.. Degonga	..	.. Bhaslia ..	.. Muhammadan	..	.. Clerk, High Court, Landholder and Honorary Magistrate, Baraset.
	U						
340	Upadhyaya, Benode Behari	.. Baraset	..	.. Choto Jagulia ..	.. Hindu	..	.. Clerk, Grand Hotel, Calcutta.
	V						
341	Venkateswaran, S	.. Bhowanipore	..	.. 23-D Mohendra Road ..	.. Hindu (Madrasi)	..	.. Examiner of Patent.

24-PARGANAS COLLECTORATE,
The 20th February 1935.

S N ROY,
Additional Collector, 24-Parganns.

Registered No. C207

No. 10 of 1935

The Calcutta Gazette

THURSDAY, MARCH 7, 1935.

CONTENTS:

	Page.
Second Forecast of the Wheat Crop of Bengal, 1934-35	327—328
Second Forecast of the Spring Oilseed Crops of Bengal, 1934-35	329—332
Statement under the Cotton Ginning and Pressing Factories Act, 1925 ..	333
Statement of accounts for the year ending 31st March 1934 of the Sinking Funds of the Calcutta Improvement Trust ..	333
Vital Statistics of towns of Bengal for the week ending 23rd February 1935 ..	334
Weather and Crop Report for the week ending 27th February 1935	335—338
Statements of weekly gauge readings on certain rivers in Bengal	339—341
Resolution on the Annual Administration Report of the Department of Industries, Bengal, for the year 1933-34 ..	342—343
Resolution on the final report on the floods and relief operations in the district of Rajshahi during the year 1934 ..	344

SUPPLEMENT.

Official Papers.

DEPARTMENT OF AGRICULTURE, BENGAL.

Dacca, the 27th February 1935.

Second Forecast of the Wheat Crop of Bengal, 1934-35.

(*Note.*—On an average of the five years ending 1932-33, the area under wheat in Bengal has represented some 0·4 per cent. of the total area under wheat in India. The ratio of the irrigated wheat acreage to total wheat acreage in (*a*) British India and (*b*) in the territory now reported on has, in the five years ending 1932-33, averaged (*a*) 41·4 and (*b*) 10·8 per cent., respectively.)

Character of the season.—At the outset weather was favourable for sowing and germination. Subsequent dry weather and occasional showers helped growth and development generally. On the whole, a satisfactory crop is anticipated.

Acreage.—According to the estimates of the District Officers, the total area sown amounts to 151,800 acres this year as against 145,400 and 145,500 acres, respectively, in the corresponding and final forecasts of last year.

Outturn.—The average provincial outturn as worked out from district estimates is 88 per cent. as against 81 and 76 per cent., respectively, in the corresponding and final forecasts of last year.

K. McLEAN,

Director of Agriculture, Bengal (offg.).

APPENDIX.

Second Forecast of the Wheat Crop of Bengal, 1934-35.

District.	Estimated normal area under wheat crop.	Estimated area under wheat.		Estimated outturn as a percentage of the normal yield per unit of area.		Date on which the sowing of the crop was begun this year and whether that date was early, normal or late.	Remarks by District Officers.
		Last year.	This year.	Last year.	This year.		
	Acres.	Acres.	Acres.				
Nadia ..	23,100	12,600	13,200	67	75	Middle of October. Normal ..	The weather has been fair. The outturn is expected to fall below the normal owing to unfavourable weather.
Murshidabad	47,100	27,200	34,100	83	83	Middle of November. ..	The outturn is anticipated to fall below the normal owing to some damage caused by drought and insect-pests in Kandi subdivision.
Jessore ..	700	300	200	80	83	November. Normal ..	The outturn is anticipated to fall below the normal owing to unfavourable weather.
Burdwan ..	1,500	1,100	1,400	95	95	First week of November. Normal.	The weather has been favourable.
Birbhum ..	4,700	4,200	4,400	92	92	End of October. Normal ..	Ditto.
Bankura ..	6,500	6,500	6,300	100	100	Middle of November. Normal	Ditto.
Midnapore ..	800	900	900	83	67	....	Want of rain at sowing time is responsible for low outturn of the crop.
Hooghly ..	200	300	200	67	67	End of November ..	The outturn is anticipated to fall much below the normal owing to want of rain.
Rajshahi ..	7,800	10,500	10,500	75	92	December. Normal ..	The weather has been favourable.
Dinajpur ..	1,300	2,300	2,400	100	100	November. Normal ..	Ditto.
Jalpaiguri ..	800	700	700	100	100	First week of November. Normal.	Ditto.
Darjeeling ..	2,900	3,400	3,400	100	92	November. Normal ..	Ditto.
Rangpur ..	3,700	3,900	3,900	105	103	Middle of November. Late ..	The weather has been favourable and hence the outturn is expected to be above normal.
Bogra ..	700	1,500	1,500	70	75	November. Normal ..	The weather has been fair on the whole.
Pabna ..	8,800	8,600	6,100	75	83	First week of November. Normal.	The outturn is expected to fall below the normal for want of rain at sowing time in the Sadar subdivision which stunted the growth of the plants.
Malda ..	43,000	50,000	50,000	67	92	Ditto	The weather has been favourable.
Dacca ..	3,300	8,400	9,400	54	86	November. Normal ..	The outturn is anticipated to fall below the normal owing to some damage done by rain in November.
Mymensingh	600	500	500	75	75	Ditto	The weather has been fair.
Faridpur ..	2,800	2,600	2,700	83	92	End of November. Late ..	The weather has been favourable.
Total Bengal	160,300	145,500	151,800	76	88		

DEPARTMENT OF AGRICULTURE, BENGAL.

Dacca, the 26th February 1935.

Second Forecast of the Spring Oilseed Crops of Bengal, 1934-35.

(*Note.*—On an average of the five years ending 1932-33, the area under linseed in Bengal has represented some 3·6 per cent. and that under rape and mustard 10·9 per cent. of the total area under these crops in British India.)

Character of the season.—In the first forecast weather was reviewed as having been favourable for sowing and germination. Rainfall in the first half of December somewhat affected the crops in places. Since then weather was helpful for growth and development generally. On the whole, a satisfactory crop is expected.

Area sown.—Oilseeds are chiefly grown in the Rajshahi, Dacca and Presidency Divisions. In the other two divisions the cultivation is not extensive. The total area under these crops (excepting sesamum for which separate forecast are issued) is returned at 888, 100 acres this year as against 860,800 acres both in the corresponding and final forecasts of last year.

Outturn.—From the District Officers' estimates, the average outturn of the different oilseed crops for the province works out at 83 per cent. of the normal as against 85 and 83 per cent. reported, respectively, in the corresponding and final forecasts of last year.

K. McLEAN,

Director of Agriculture, Bengal (offg.).

APPENDIX.

Second Forecast of the Spring Oilseed Crops of Bengal, 1934-35.

District.	Name of spring oilseed crops.	Estimated normal area under spring oilseeds.	Estimated area under spring oilseeds.		Estimated outturn as a percentage of the normal yield per unit of area.		Date by which the harvesting generally commenced this year and whether that date was early, normal or late.	Remarks by District Officers.
			Last year (1933-34).	This year (1934-35).	Last year.	This year.		
		Acres.	Acres.	Acres.				
24-Parganas.	Linseed	1,000	300	300	83	67	January. Normal.	The weather has been fairly favourable.
	Rape and mustard ..	1,000	1,000	1,000	75	75		
	Other oilseeds (excepting *til*) ..	(*a*) 1,000	(*a*) 700	(*a*) 700	92	92		
	Total ..	3,000	2,000	2,000	82	80		
Nadia.	Linseed	65,000	29,300	29,900	67	75	End of January. Normal.	The outturn is anticipated to fall below the normal owing to some damage caused by rain.
	Rape and mustard ..	31,600	10,500	11,300				
	Other oilseeds (excepting *til*) ..	5,900	2,900	2,800				
	Total ..	102,500	42,700	44,000	67	75		
Murshidabad.	Linseed	38,600	25,200	25,000	75	83	End of February. Normal.	The outturn is anticipated to fall below the normal owing to unfair weather in some places.
	Rape and mustard ..	22,700	18,800	20,700		75		
	Other oilseeds (excepting *til*) ..	3,700	2,400	2,400	83	83		
	Total ..	65,000	46,400	48,100	75	80		
Jessore.	Linseed	10,600	7,400	8,400	69	67	January. Normal.	The low outturn is due to damage caused by fungus disease in parts of Jhenidah and by drought in parts of Narail subdivisions.
	Rape and mustard ..	19,600	16,300	17,200	60	59		
	Other oilseeds (excepting *til*) ..	2,800	(*a*) 2,300	(*a*) 3,300	69	67		
	Total ..	33,000	26,000	28,900	63	62		
Khulna.	Linseed	(15)	100	..	..		End of January. Normal.	....
	Rape and mustard ..	15,300	10,300	10,400	83	92		
	Other oilseeds (excepting *til*) ..	(*c*) 10,500	(*c*) 10,500	(*c*) 10,500				
	Total ..	25,800	20,900	20,900	83	92		
Burdwan.	Linseed	7,400	3,700	1,700	90		Not yet commenced.	The weather has been fairly favourable.
	Rape and mustard ..	10,700	7,700	7,800	95	83		
	Other oilseeds (excepting *til*) ..	..	..	..	..			
	Total ..	18,100	11,400	9,500	93	83		
Birbhum.	Linseed	1,100	1,000	1,000	83	83	End of January. Normal.	Ditto. —
	Rape and mustard ..	1,700	2,300	2,300				
	Other oilseeds (excepting *til*) ..	100	200	200				
	Total ..	2,900	3,500	3,500	83	83		
Bankura.	Linseed	1,600	1,400	1,400	100	100	Middle of January. Normal.	The weather has been favourable.
	Rape and mustard ..	6,300	5,700	5,700				
	Other oilseeds (excepting *til*) ..	9,100	7,100	7,100				
	Total ..	17,000	14,200	14,200	100	100		
Midnapore.	Linseed	4,900	7,100	7,200	79	75	February and March.	The weather has been fair. The increase in area as compared with the first forecast is due to extension of cultivation.
	Rape and mustard ..	13,200	5,100	6,100				
	Other oilseeds (excepting *til*) ..	5,900	(*b*) 6,800	(*b*) 5,500				
	Total ..	24,000	19,000	18,800	79	75		
Hooghly.	Linseed	100	(35)	(50)	75	67	Not yet commenced.	The outturn is below the normal owing to some damage caused by excessive cold and occasional rain.
	Rape and mustard ..	2,900*	1,500	2,000				
	Other oilseeds (excepting *til*) ..	100*	300	100				
	Total ..	3,100	1,800	2,100	75	67		

(*a*) Including the area under cocoanut.
(*c*) Area under cocoanut only.

(*b*) Including the area under groundnut, cocoanut and castor.
* Revised.

District.	Name of spring oilseed crops.	Estimated normal area under spring oilseeds.	Estimated area under spring oilseeds.		Estimated outturn as a percentage of the normal yield per unit of area.		Date by which the harvesting generally commenced this year and whether that date was early, normal or late.	Remarks by District Officers.
			Last year (1933-34).	This year (1934-35).	Last year.	This year.		
		Acres.	Acres.	Acres.				
Howrah.	Linseed	300	200	100	92	83	Will commence from middle of March. Normal.	The weather has been fairly favourable.
	Rape and mustard ..	600	200	300				
	Other oilseeds (excepting *til*) ..	..	200†	200†	83			
	Total ..	900	600	600	89	93		
Rajshahi.	Linseed ..	14,500	9,700	9,700	75	92	February. Normal.	The weather has been favourable.
	Rape and mustard ..	53,100	42,400	42,500		92		
	Other oilseeds (excepting *til*)..	2,300	1,200	1,200*		81		
	Total ..	69,900	53,300	53,400	75	92		
Dinajpur.	Linseed	200	500	800	75	75	End of January. Late.	The weather has been fair. The increase in area is due to cultivation of crops on lands which have been left uncultivated owing to unfavourable weather.
	Rape and mustard ..	62,400	50,000	56,000				
	Total ..	62,600	50,500	56,800	75	75		
Jalpaiguri.	Rape and mustard ..	52,400	39,000	39,600	100	100	February. Normal.	The weather has been favourable.
	Other oilseeds (excepting *til*) ..	200	100	100		83		
	Total ..	52,600	39,100	39,700	100	100		
Darjeeling.	Rape and mustard ..	1,600	1,600	1,600	92	92	January. Normal	*Ditto*
	Other oilseeds (excepting *til*) ..	300	300	300	100	100	Not yet begun.	
	Total ..	1,900	1,900	1,900	93	93		
Rangpur.	Rape and mustard ..	67,000	80,000	82,000	105	100	Latter part of January. A little late.	Ditto.
	Other oilseeds (excepting *til*) ..	200	200	200				
	Total ..	67,200	80,200	82,200	105	100		
Bogra.	Linseed	1,200	1,500	1,600	60	65	February and March. Normal.	The weather has been fair on the whole.
	Rape and mustard ..	26,000	30,000	33,000	75	75	January and February. Normal.	
	Other oilseeds (excepting *til*) ..	300	500	500	60	65	January to March. Normal.	
	Total ..	27,500	32,000	35,100	74	74		
Pabna.	Linseed	12,900	10,500	6,800	67	75	Not yet begun. By the middle of January. Normal.	The outturn is expected to fall below the normal for want of rain.
	Rape and mustard ..	73,000	42,000	53,200		92		
	Other oilseeds ..	1,000	..	100		100		
	Total ..	86,900	52,500	60,100	67	90		
Malda.	Linseed	4,000	5,200	5,200	75	75	..	The outturn is anticipated to fall below the normal owing to some damage done by insect-pests.
	Rape and mustard ..	10,000	12,000	12,000		83		
	Other oilseeds (excepting *til*) ..	1,800	900	(*a*)1,100				
	Total ..	15,800	18,100	18,300	75	81		
Dacca.	Linseed	5,200	4,400	4,800	44	65	..	The outturn is below the normal owing to some damage caused by rain in November.
	Rape and mustard ..	72,500	80,400	82,100	62	91		
	Other oilseeds (excepting *til*) ..	5,700	5,200	4,200	58	93		
	Total ..	83,400	90,000	91,100	61	90		
Mymensingh.	Linseed	3,900	2,000	2,000	100	75	January. Normal.	The weather has been fair.
	Rape and mustard ..	269,400	175,000	175,000				
	Other oilseeds (excepting *til*) ..	..	100	100				
	Total ..	273,300	177,100	177,100	100	75		
Faridpur.	Linseed	6,000	5,900	6,000	100	83	First week of February. Normal.	The weather has been fairly favourable.
	Rape and mustard ..	24,600	21,300	22,000				
	Other oilseeds (excepting *til*) ..	1,100	800	800				
	Total ..	31,700	27,700	28,300	100	83		

*Includes area under castor. † Area under cocoanut. (*a*) Includes area under groundnut.

District.	Name of spring oilseed crops.	Estimated normal area under spring oilseeds.	Estimated area under spring oilseeds.		Estimated outturn as a percentage of the normal yield per unit of area.		Date by which the harvesting generally commenced this year and whether that date was early, normal or late.	Remarks by District Officers.
			Last year (1933-34).	This year (1934-35).	Last year.	This year.		
		Acres.	Acres.	Acres.				
Bakarganj.	Linseed	4,200	600	600	83	100	Not yet commenced.	The weather has been favourable. A normal outturn is expected.
	Rape and mustard ..	1,800	1,000	1,200				
	Other oilseeds (excepting *til*) ..	100	100	100				
	Total ..	6,100	1,700	1,900	83	100		
Chittagong.	Linseed	100	100	100	100	100	January and February. Normal.	Ditto.
	Rape and mustard ..	2,000	2,000	2,000				
	Other oilseeds (excepting *til*) ..	100	100	100				
	Total ..	2,200	2,200	2,200	100	100		
Tippera.	Linseed	3,100	1,700	1,700	75	75	Last part of February. Normal.	The low outturn is due to damage caused by insects in parts of Brahmanbaria and by rain in parts of Chandpur subdivisions.
	Rape and mustard ..	37,000	21,800	20,500		67		
	Other oilseeds (excepting *til*) ..	300	400	400		75		
	Total ..	40,400	23,900	22,600	75	68		
Noakhali.	Linseed	6,300	6,000	7,500	50	75	March. February.	The weather has been fair.
	Rape and mustard ..	1,000	1,000	2,000	60			
	Other oilseeds (excepting *til*) ..	(a) 700	(a) 800	(a) 1,000	75			
	Total ..	8,000	7,800	10,500	54	75		
Chittagong Hill Tracts.	Rape and mustard ..	14,300	14,300	14,300	75	67	Last week of January. Early.	The outturn is anticipated to fall below the normal owing to some damage done by drought.
Total Bengal.	Linseed	192,200	123,800	121,800	72	78	..	
	Rape and mustard ..	893,700	693,400	723,800	85	84		
	Other oilseeds (excepting *til*) ..	53,200	43,600	42,500	80	86		
	Total ..	1,139,100	860,800	888,100	83	83		

(a) Including the area under cocoanut.

FORM O—BENGAL.

STATEMENT OF COTTON PRESSED IN THE BENGAL PRESIDENCY FOR THE WEEK ENDING THE 22nd FEBRUARY 1935.

[Section 5(2) of the Cotton Ginning and Pressing Factories Act, 1925.]

Name of Division or block.	Number of bales pressed.				District included in the block.
	During the week.	During the corresponding week last year.	Since 1st September 1934 (the date prescribed by the Local Government as the commencement of the season).	During the corresponding period last year.	
The Bengal Presidency	1,482 or 1,473·4 bales of 400 lbs. each.	2,054	7,332	10,065	All districts in the Presidency.

J. B. McBRIDE,
Chief Inspector of Factories, Bengal.

CALCUTTA IMPROVEMENT TRUST.

The 28th February 1935.

Statement of Accounts for the year ending 31st March 1934 of the Sinking Funds established by the Board of Trustees for the Improvement of Calcutta for the repayment of their Debenture Loans, required under section 103 of the Calcutta Improvement Act.

Particulars of the Debenture Loans.	Amount invested during the year 1933-34 under section 101 of the Act.	Date of last investment.	Aggregate amount of the securities held by the Trustees.	Aggregate amount applied under section 102 of the Act in or towards repaying loans.	Aggregate amount already paid into the Sinking Fund.
	Rs. a. p.		£. s. d.		Rs. a. p.
6 per cent. Loan of 1922-52 for £ 3,50,000.	1,10,069 14 4	25th January 1934	1,04,057 18 7	Nil	13,39,842 14 11
5½ per cent. Loan of 1923-53 for £ 7,00,000.	2,91,198 6 2	31st January 1934	1,94,307 6 5	Nil	25,59,346 13 0
6 per cent. Loan of 1925-55 for Rs. 50,00,000.	1,41,454 15 5	20th March 1934	9,23,100 0 0	Nil	Securities— 3,45,300 0 0 Cash— 5,62,868 3 5
5½ per cent. Loan of 1929-59 for Rs. 25,00,000.	54,034 4 5	20th March 1934	2,27,600 0 0	Nil	2,19,665 10 0

M. SUBRAHMANYAN,
Accountant-General, Bengal.

D. GLADDING,
Secretary to the Government of Bengal, Finance Department.

Vital statistics of towns with a population of 50,000 and over of the Bengal Presidency for the week ending Saturday, the 23rd February 1935.

Districts.	Nos.	Towns.	Population under registration according to Census of 1931.			Births registered.		Deaths registered.																							
			Male.	Female.	Total.	Number registered (excluding still-births).	Still-births registered.	Cholera.	Small-pox.	Plague.	Cerebro spinal meningitis.	Malaria.	Enteric fever.	Measles.	Relapsing fever.	Kala-azar.	Influenza.	Other fevers.	Dysentery.	Diarrhœa.	Pneumonia.	Phthisis.	Other respiratory diseases.	Injuries including suicide.	Deaths from child-birth.	Other causes.	Total of all causes.			Total of corresponding week of the previous year.		
																											Male.	Female.	Total.	Male.	Female.	Total.
Calcutta ..	1	Calcutta ..	814,948	381,786	1,196,734	575	39	79	45	..	39	8	17	4	..	3	9	30	28	6	42	58	122	11	..	315	454	362	816	429	295	724
Burdwan ..	2	Asansol Mining Settlement.	209,544	173,136	382,680	212	7	..	..	..	..	4	..	..	..	..	..	43	7	..	13	2	14	3	2	53	71	70	141	68	71	139
Howrah ..	3	Howrah ..	145,120	79,753	224,873	125	9	12	3	..	..	4	2	..	..	2	..	5	14	20	15	10	30	1	..	55	92	81	173	75	56	131
Dacca ..	4	Dacca ..	79,365	59,153	138,518	107	3	1	..	..	..	..	..	..	..	1	..	1	3	1	12	..	3	2	..	7	19	17	36	32	23	55
24-Parganas ..	5	Bhatpara ..	60,134	24,841	84,975	27	..	..	1	..	..	..	..	1	..	..	..	3	..	..	1	..	1	1	..	1	4	5	9	5	9	14
Chittagong ..	6	Chittagong	35,049	18,107	53,156	23	..	2	..	..	..	1	..	..	..	..	..	5	1	..	..	..	1	..	..	6	10	6	16	8	2	10

Calcutta, the 1st March 1935.

R. B. KHAMBATA, M.R.C.S. (ENG.), L.R.C.P. (LOND.), D.P.H. (CAMB.), *Director of Public Health, Bengal.*

DISTRICT REPORTS ON WEATHER AND CROPS.

For the week ending on the 27th February 1935.

Summary.—During the week light to moderate rainfall was almost general throughout the Presidency. It has helped the preparatory tillage for autumn crops and has been beneficial to the standing crops generally. During the week ending Saturday, the 23rd February 1935, 3,217 persons attended different relief centres and 736 persons received gratuitous relief in the distressed areas of Murshidabad. In Birbhum and Bankura, 7,207 and 732 persons, respectively, were employed on test relief works on Saturday, the 23rd February 1935. The average price of common rice for the province has risen by about 0·26 per cent. as compared with that of the previous week.

Serial No.	District and subdivision.	Rainfall.	Price of common rice, in seers, per rupee.		Character of the weather, condition of crops, etc.
			This week.	Previous week.	
1	2	3	4	5	6
		Inches.			
1	24-Parganas ..	Nil	10 15/16	10 15/16	Weather seasonable. No damage to crops is reported. Fodder and water are sufficient. Export and import normal.
	Diamond Harbour	Nil	14	14	
	Barrackpore ..	Nil	10	10	
	Baraset ..	Nil	10	10	
	Basirhat ..	Nil	12 1/16	12 1/4	
2	Nadia ..	0·62	10	10	Weather seasonable. Import and export of rice normal. Harvesting of *rabi* crops has begun. Fodder and water are sufficient.
	Kushtia ..	2·14	11 1/2	11 1/2	
	Meherpur ..	0·39	10 1/2	11	
	Chuadanga ..	0·07	11	11	
	Ranaghat ..	Nil	9 1/2	9 1/2	
3	Murshidabad ..	0·37	10	10	Weather seasonable. Prospects of standing crops are not favourable in Kandi subdivision. Fodder is not sufficient in parts of Sadar subdivision. No large export or import. Cattle-disease is reported from Kandi and Jangipur subdivisions. Test relief works continue. 2,954 men, 183 women and 80 children attended relief centres during the week ending Saturday, the 23rd February 1935. Number of persons receiving gratuitous relief in the distressed areas was 187, 385 and 164 in Lalbagh, Kandi and Jangipur subdivisions, respectively.
	Lalbagh ..	0·54	11	11	
	Jangipur ..	0·28	11 1/2	11 1/2	
	Kandi ..	0·41	11 1/2	11 1/2	
4	Jessore ..	0·24	11	11	Weather seasonable. Prospects of standing crops are fair. No large export or import. Fodder and water are sufficient.
	Jhenidah ..	0·16	13	13	
	Magura ..	Nil	12	12	
	Narail ..	1·77	13	13	
	Bongaon ..	0·40	10	10	
5	Khulna ..	Nil	11	11	Weather seasonable. Fodder and water are sufficient.
	Satkhira ..	(*n*)	(*n*)	12 1/2	
	Bagerhat ..	Nil	12	12	

(*n*) Not reported.

Serial No.	District and sub-division.	Rainfall.	Price of common rice, in seers, per rupee.		Character of the weather, condition of crops, etc.
			This week.	Previous week.	
1	2	3	4	5	6
		Inches.			
6	Burdwan ..	0·20	11	10½	Weather seasonable. Condition of crops is not satisfactory. Fodder and water are sufficient.
	Asansol ..	0·32	10½	10½	
	Katwa ..	0·20	11½	11½	
	Kalna ..	Nil	10	10	
7	Birbhum ..	0·25	12	12½	Weather seasonable. Prospects of standing crops are fair. Fodder and water are sufficient. Cattle-disease is reported from Rampurhat thana. 7,207 men were employed on test relief works on Saturday, the 23rd February 1935.
	Rampurhat ..	0·70	11	11	
8	Bankura ..	0·01	11	11	Weather seasonable. Stock of rice, fodder and water are sufficient. Harvesting of *rabi* crops is in progress. No large export or import. Prospects of standing crops are fair. Cattle-disease is reported from Chhatna, Vishnupur and Gangajalghati police-stations. 732 persons were employed on test relief works opened by the district board, at Dhao bundh and Chamtiabad bundh on Saturday, the 23rd February 1935.
	Vishnupur ..	0·18	11½	10½	
9	Midnapore ..	0·35	13	13	Weather seasonable. Stock of rice and fodder and water are sufficient.
	Contai ..	Nil	14	15	
	Tamluk ..	0·14	11½	11½	
	Ghatal ..	0·18	12½	12½	
	Jhargram ..	Nil	12	11	
10	Hooghly ..	0·02	10	10	Weather seasonable. Fodder and water are sufficient.
	Serampore ..	Nil	10	10	
	Arambagh ..	0·13	11½	11½	
11	Howrah ..	Nil	10	10	Weather seasonable; its effects are favourable. Fodder and water are sufficient.
	Uluberia ..	0·10	11½	11½	
12	Rajshahi (Rampur Boalia).	(*n*)	11½	12½	Weather seasonable and favourable to agricultural operations. Prospects of standing crops are generally good. Harvesting of *rabi* crops is still going on. Fodder and water are sufficient.
	Naogaon ..	0·45	12½	12½	
	Nator ..	0·87	11½	11½	
13	Dinajpur ..	0·05	12½	12½	Weather seasonable. Its effect on agricultural operation is favourable. Fodder and water are sufficient.
	Thakurgaon ..	Nil	13	13	
	Balurghat ..	Nil	13	13 1/16	
14	Jalpaiguri ..	0·09	13	13	Weather seasonable. Damage is reported to standing tobacco crop in some villages of the Alipur Duar Tahsil by hails. Fodder and water are sufficient.
	Alipur ..	Nil	13	13	

(*n*) Not reported.

Serial No.	District and subdivision.	Rainfall.	Price of common rice, in seers, per rupee.		Character of the weather, condition of crops, etc.
			This week.	Previous week.	
1	2	3	4	5	6
		Inches.			
15	Darjeeling ..	Nil	8	8	Weather cold. Fodder and water are sufficient. Cattle-disease exists at places.
	Kurseong ..	0·22	8	7½	
	Siliguri ..	0·03	13½	13	
	Kalimpong ..	0·84	7½	8	
16	Rangpur ..	0·19	11	11	Weather seasonable. Prospects of standing crops are fair. Lands are under cultivation for *aus* crops. No large export or import. Fodder and water are sufficient.
	Nilphamari ..	(*n*)	(*n*)	12	
	Kurigram ..	0·50	13	13	
	Gaibandha ..	0·24	12	12	
17	Bogra ..	0·28	14	14	Weather seasonable. Ploughing for the sowing of jute has begun. Fodder and water are sufficient.
18	Pabna ..	0·71	11	10½	Weather seasonable. Condition of standing crops is fair. Fodder and water are sufficient.
	Serajganj ..	0·32	11	11	
19	Malda ..	0·19	13½	12½	Weather seasonable. Prospects of standing crops are fair. Fodder and water are available. Cattle-disease is reported from Ratua police-station.
20	Cooch-Behar ..	0·94	14 3/16	14 3/16	Weather seasonable. Preparation of lands for jute and autumn paddy and gathering of mustard seeds continue. Harvesting of winter paddy is finished. Outturn is fair. Cutting of tobacco leaves is in progress Prospects and condition of standing crops are fair. Fodder and water are sufficient. Cattle-disease is reported from Dinhata subdivision.
21	Dacca ..	0·56	11	11	Rainfall at North Sadar (Kapasia) 0·13. Weather seasonable and its effects on the crops are good. No large export or import. Prospects of crops are fair. Fodder and water are available. Cattle-disease has nearly subsided.
	Manikganj ..	0·05	11	11	
	Narayanganj ..	0·33	11½	11½	
	Munshiganj ..	0·29	11½	11½	

(*n*) Not reported.

Serial No.	District and subdivision.	Rainfall.	Price of common rice, in seers, per rupee.		Character of the weather, condition of crops, etc.
			This week.	Previous week.	
1	2	3	4	5	6
		Inches.			
22	Mymensingh ..	1·16	10½	10½	Weather seasonable. Condition of crops is fair. No damage is reported. Lands are being prepared for sowing of paddy and jute. Fodder and water are available.
	Jamalpur ..	Nil	12½	11 7/16	
	Tangail ..	0·19	11	11	
	Netrakona ..	0·12	12	12	
	Kishorganj ..	0·22	11½	10½	
23	Faridpur ..	0·21	12½	12½	Weather seasonable. Condition of standing crops is fair. Fodder and water are sufficient. Cattle-disease exists in the Gopalganj subdivision.
	Goalundo (Rajbari).	0·56	10	10	
	Madaripur ..	0·51	13	13	
	Gopalganj (*a*) ..	1·01	13	13	
24	Bakarganj (Barisal).	Nil	13	13	Weather seasonable. Prospects of standing crops are good. Fodder and water are sufficient.
	Pirojpur ..	Nil	11½	11½	
	Patuakhali ..	0·42	11	11	
	Dakshin Shahazpur (Bhola).	2·40	12	12	
25	Chittagong ..	Nil	10 12*	12 13*	Weather seasonable. Condition of standing *rabi* crop is fair. Fodder and water are sufficient Panga salt sells at 13 seers per rupee at Sadar and 12 seers per rupee at Cox's Bazar.
	Cox's Bazar ..	0·69	13	13	
26	Tippera (Comilla)	0·04	13	13	Prospects of crops are fair. Cattle-disease exists in Matlab police-station.
	Brahmanbaria ..	0·16	11	11	
	Chandpur ..	0·14	13 1/16	13 1/16	
27	Noakhali ..	Nil	13	13	Weather seasonable. Condition of standing crops is fair. Fodder and water are sufficient.
	Feni ..	2·09	13½	13½	
28	Chittagong Hill Tracts.	0·12	15	17	Weather seasonable. Its effects on agricultural operations are favourable. Fodder and water are sufficient.
29	Tripura State ..	0·62	10¾	12¾	Weather rainy. Condition of cattle is good. Fodder and water are sufficient. Cotton sells at Rs. 8 to Rs. 15 and jute at Rs. 2-8 to Rs. 4-4 per maund.

(*a*) The rainfall at Haridaspur, which is very near to Gopalganj, is shown here.

* Burma rice.

S. ABDULLAH, for *Director of Agriculture, Bengal.*

Dacca, the 4th March 1935.

Statement of weekly gauge readings on the river Ganges at Rampur Boalia for the week ending the 9th February 1935.

Date.	Hour.	Height of surface above P. W. D. datum.	Height of surface above P. W. D. datum on the same date last year.	Remarks.
1935.				
3rd February	7 a.m.	38·63	38·23	Zero of gauge referred to B. M. on Rajshahi College step ; value 64·73.
4th „	7 „	38·73	38·23	
5th „	7 „	38·68	38·13	
6th „	7 „	38·63	38·13	Value of 0 of the gauge =35·23 P. W. D.
7th „	7 „	38·58	38·08	
8th „	7 „	38·53	37·93	
9th „	7 „	38·48	37·93	

Highest recorded level on 26-8-1879=64·24.
Lowest recorded level on 24-4-1931=32·05.

J. MACKIE, *Subdivisional Officer,*
Irrigation Department, Rajshahi.

Rampur Boalia, the 10th February 1935.

Statement of weekly gauge readings on the river Ganges at Rampur Boalia for the week ending the 23rd February 1935.

Date.	Hour.	Height of surface above P. W. D. datum.	Height of surface above P. W. D. datum on the same date last year.	Remarks.
1935.				
17th February	7 a.m.	38·15	37·53	Zero of gauge referred to B. M. on Rajshahi College step ; value 64·73.
18th „	7 „	38·15	37·53	
19th „	7 „	38·15	37·43	
20th „	7 „	38·15	37·43	Value of 0 of the gauge= 34·55 P. W. D.
21st „	7 „	38·05	37·43	
22nd „	7 „	38·05	37·43	
23rd „	7 „	38·00	37·43	

Highest recorded level on 26-8-1879=64·24.
Lowest recorded level on 24-4-1931=32·05.

J. MACKIE, *Subdivisional Officer*,
Irrigation Department, Rajshahi.

Rampur Boalia, the 23rd February 1935.

Statement showing the gauge readings at Dacca Waterworks Station on the river Buriganga for the week ending 23rd February 1935.

Date.	At highest water.		At lowest water.		Commencement of—		Remarks.	
	Time.	Reading.	Time.	Reading.	Ebb tide.	Flow tide.	7 a.m.	5 p.m.
1935.								
17th February ..	10-45	3·85	16-45	2·25	10-57	16-55	3·3	2·3
18th „ ..	11-30	4·4	17-35	2·8	11-38	17-43	3·6	2·85
19th „ ..	12-20	5·0	..	..	12-30	..	3·5	3·75
20th „ ..	13-10	5·1	7-0	3·5	13-20	7-12	3·5	4·2
21st „ ..	14-0	5·3	7-50	3·7	14-10	8-0	3·9	4·6
22nd „ ..	14-45	5·5	8-40	3·9	14-55	8-50	4·2	5·0
23rd „ ..	15-35	5·6	9-30	4·0	15-45	9-40	4·55	5·2

B. M. on settling tank 39·49 O. M. S. L. Zero is at O. M. S. L.

Notable high and low water levels of previous years.

		Taken at high tide.			Taken at low tide.
27th August	1906 ..	70·5	23rd February	1907 ..	51·06
5th September	1909 ..	66·86	13th „	1908 ..	51·06
10th August	1910 ..	69·86	12th March	1912 ..	51·06
1st „	1911 ..	68·46	6th „	1914 ..	50·60
13th „	1912 ..	67·16	22nd February	1915 ..	50·30
31st „	1915 ..	69·7	15th „	1916 ..	50·60
8th „	1916 ..	68·1	3rd March	1917 ..	51·0
12th „	1917 ..	67·1	21st February	1918 ..	51·40
13th „	1918 ..	69·12	26th „	1919 ..	50·4
2nd „	1919 ..	66·8	18th „	1920 ..	50·9
8th September	1920 ..	66·9	19th „	1921 ..	50·9
28th July	1921 ..	68·4	8th March	1922 ..	51·05
10th August	1922 ..	68·00	14th „	1923 ..	50·8
31st July	1923 ..	66·15	16th February	1924 ..	50·50
29th August	1924 ..	68·82	5th March	1925 ..	50·9
8th September	1925 ..	68·52	9th February	1926 ..	2·2
15th August	1926 ..	19·6	27th „	1927 ..	2·10
17th September	1927 ..	18·70	16th „	1928 ..	2·2
22nd August	1928 ..	20·0	21st „	1929 ..	2·0
13th July	1929 ..	17·8	24th „	1930 ..	2·3
12th September	1930 ..	18·65	28th „	1931 ..	2·2
16th August	1931 ..	21·7	18th „	1932 ..	1·8
6th September	1932 ..	18·5	6th „	1933 ..	2·10
7th „	1933 ..	17·80	20th March	1934 ..	2·40
23rd August	1934 ..	19·35			

N.B.—Zero of the gauge at Dacca Waterworks prior to 11 a.m. on the 8th January 1926= −48·51 with reference to P. W. D. datum.

Zero of the gauge at Dacca Waterworks since 11 a.m. of the 8th January 1926=0·00 with reference to P. W. D. datum.

M. K. BHATTACHARJEE, *Executive Engineer,*
Khulna Division.

Khulna, the 1st March 1935.

Resolution on the Annual Administration Report of the Department of Industries, Bengal, for the year 1933-34.

GOVERNMENT OF BENGAL.

Department of Agriculture and Industries.

Industries.

CALCUTTA, THE 26TH FEBRUARY 1935.

RESOLUTION—No. 1125Ind.

Minister-in-charge: The Hon'ble Nawab K. G. M. Faroqui, Khan Bahadur.

Read—

The Annual Administration Report of the Department of Industries, Bengal, for the year 1933-34.

Mr. A. T. Weston held charge of the department during the first and last parts of the year under review. During the period of his absence on leave, from the 8th June 1933 to the 11th February 1934, Mr. G. S. Dutt, I.C.S., was in charge. The post of Principal, Government Weaving Institute, Serampore, was filled by the appointment of Mr. Bhattacharjee, M.SC. (Tech.) (Manchester). Otherwise there was no change in the superior staff.

2. Though the factors which make for economic depression persisted and barred the way to a revival of industries dependent on world conditions, it is satisfactory to find evidence during the year of advance and expansion in the case of the industries more definitely related to internal trade. Thus a feature of the year in Bengal was the increase in the number of cotton and sugarcane factories, and the general increase in the use of power under organised factory conditions illustrated by the interesting graphs attached to the report.

3. In concentrating on the task of reviving and developing small and cottage industries the department made a useful contribution during the year towards the solution of the problem of unemployment. The staff sanctioned for demonstration in the previous year was continued and was increased by the addition of 21 additional parties. Local advisory bodies were formed in a number of districts with a view to securing non-official advice and assistance in utilising these demonstrations to the best advantage, and the co-operation of the local officers was also enlisted.

4. The results were substantial. Nearly 400 students underwent training, of whom 165 at least are known to have started businesses of their own or to have secured employment or to have taken up advanced training. The improved methods worked out in the Engineering Section were placed at their disposal, and these were particularly valuable in the cases of brass and bell-metal manufacture, where the students have learnt to make some of the less complicated building and sanitary fittings hitherto imported, of cutlery—the manufacture of scissors, for example, has been standardised and an improved furnace introduced—and of pottery, for which a cheap and satisfactory kiln has been invented, as well as new processes of glazing which are expected to stimulate demand. Those who have set up for themselves after their training (and all *bona fide* industrialists) can receive the assistance and advice of the Industrial Engineer in meeting their practical problems. A marketing investigator was also appointed to study the conditions of demand and supply in the case of the smaller industries and to help in finding markets.

5. A valuable contribution to the work was that of the "Good Companions," an organisation of voluntary workers, which established a depôt in Calcutta, where crafts products are displayed in an artistic and attractive fashion, and did much to revive the demand for the products of Indian craftsmanship.

6. Another feature of the year was the issue by the Tariff Board of the results of its enquiry into the conditions of the silk industry. On the basis of this report the Government of India have given a substantial degree of protection to the industry for a period of five years. It is the Director's aim to utilise the advantages so secured, to revive the old silk industry and to restore it, if possible, to something like its former pre-eminence. This can only be done in present conditions if more

scientific methods are introduced such as will enable Bengal silk to compete successfully with the products of other countries. This question and the question of general improvement in organisation are receiving the special attention of the department and of the Collectors of the silk-producing districts.

7. The Industrial Chemist's section continued its programme of research, without which industries cannot develop and expand. The work was based primarily on the practical problems referred by individual industrialists. Special attention was, as before, paid to soap manufacture, the potential importance of which in India is very great, and the investigations resulted in a satisfactory measure of success. Classes were held for trainiig in soap-making. There is at the same time great scope for other oil-seed products, and India's position as one of the largest producers indicates the possibilities of great future development. A scheme for investigation on an all-India basis sent up from Bengal was under the consideration of the Imperial Council of Agricultural Research.

8. Progress was made too in the weaving and allied industries. The number of persons, both of the *bhadralok* and of the cultivating classes, who took up the spinning of various classes of materials, dyeing, etc., as a subsidiary occupation increased. Demonstration parties were at work, and a considerable number of persons, mainly from the Midnapore district, were taught the use of improved appliances. As in the case of silk, up-to-date methods are required if the industry is to thrive, and the scheme by which improved weaving appliances have been supplied to cottage weavers at cost price has proved very successful. The actual cost of the appliances so supplied amounted to Rs. 25,894, and the cost of packing and freight, borne by Government, to Rs. 10,536. The Director reports that the weaver is no longer satisfied with the *kutcha* construction usually found in the bazar when he has once become familiar with the possibilities of a properly constructed loom.

9. The Bengal Tanning Institute maintained its record of useful work in all the main branches of its activities, viz., research, instruction and demonstration, during the year under review. The investigations carried out at the Institute and the technical knowledge in the improved tanning process imparted by it proved of great utility to the industry. It is noteworthy that the tanning industry in Bengal, particularly the manufacture of the better grades of chrome upper leather, has derived substantial advantages as a result of the Ottawa Agreement of 1932.

10. The progress of technical education in all its branches, including weaving education, was maintained during the year under review. In order to make the instruction imparted at the Government Weaving Institute at Serampore more practical, arrangements were made during the year with the authorities of the Banga Luxmi Cotton Mills located at Serampore to give the students of the Institute the benefit of a course of practical training in the mills simultaneously with theoretical training at the Institute.

11. For the considerable measures of achievement attained during a difficult year the Government of Bengal (Ministry of Industries) have much pleasure in thanking Mr. Weston, Mr. Dutt and the superior staff of the department. The Minister in charge also takes this opportunity of conveying his thanks to the members of the Board of Industries and other Boards and Committees associated with the department for the assistance rendered by them.

By order of the Govt. of Bengal

(Ministry of Industries),

J. D. V. HODGE,

Secy. to the Govt. of Bengal.

Resolution on the final report on the floods and relief operations in the district of Rajshahi during the year 1934.

GOVERNMENT OF BENGAL.

Revenue Department.

Miscellaneous.

CALCUTTA, THE 2ND MARCH 1935.

RESOLUTION—No. 3402Mis.

Read—

Letter No. 4162J., dated the 8th December 1934, from the Commissioner, Rajshahi Division, submitting the final report on the floods and relief operations in the district of Rajshahi during the year 1934.

The report deals with the operations for the relief of distress caused by the floods of September 1934 in the district of Rajshahi. The abnormal rise in the river Padma from the second week of August caused serious flooding and extensive damage to crops. It reached its highest level by the first week of September when the water was 63·10 feet above sea level and only a few inches less than the record rise to 64·24 feet in 1879. The low lying lands along the river and its distributaries in this and other districts were inundated, the area affected in Rajshahi district being 300 to 400 square miles. The southern portion of Godagari, Paba and Charghat in Sadar and Lalpur thanas and the western portion of the Baraigram thana in Nator subdivision suffered heavily; 53 villages in Charghat, 30 in Paba and 33 in Godagari police-stations in the Sadar subdivision, and the whole of the Lalpur police-station and unions VII and VIII of Baraigram, being inundated. The cultivators inhabiting the "chars" of the main river were naturally the worst sufferers, lands and houses being washed away and the *aus* crop destroyed. In the "chars" alone, about 2,500 houses collapsed.

Fortunately there was no loss of life or cattle as a direct result of the floods, and timely precautions by the health staff of the district board prevented the outbreak of epidemic diseases.

The distress was at first serious, but it did not last for long, and it is hoped that the inundation will in the end benefit public health and increase the fertility of the land.

Relief measures were promptly undertaken by local Government officers and the district board. To relieve the distress officers were sent out with boats and rice. People who lost their huts were brought, along with their cattle, to the main land. Shelter was given to the homeless, and food was distributed among the starving. A sum of Rs. 2,470 was raised locally for gratuitous relief, Rs. 1,000 was added by the Divisional Commissioner from the relief fund at his disposal, and a grant of Rs. 3,000 was made by Government. 4,198 maunds of rice with small quantities of *dal*, salt, oil, etc., were distributed, chiefly among the "char" people. A sum of Rs. 20,000 has been allotted by Government for distribution as agricultural loans in the district.

The water subsided by the beginning of October and conditions gradually became normal.

The Governor in Council is satisfied that the measures taken for the relief of distress were successful and adequate. He desires to record his appreciation of the good work done by Mr. A. S. Larkin, I.C.S., the Collector of the district, and his staff, by the district board and by relief committees. Among those who generously subscribed to the relief funds, the proprietors of the North Bengal Sugar Mills deserve special mention.

Order—Ordered that this resolution be published in the *Calcutta Gazette*.

By order of the Governor in Council,

O. M. MARTIN,
Secy. to the Govt. of Bengal.

Printed and published by the Superintendent, Government Printing, Bengal Government Press, Alipore, Bengal, on the 7th March 1935.

Registered No. C207

No. 11 of 1935

The Calcutta Gazette

Published by Authority

THURSDAY, MARCH 14, 1935.

CONTENTS:

	Page.
Part I.—Orders and Notifications by the Governor of Bengal, the Government of Bengal, the High Court, Government Treasury, etc.	521—567
Part IA.—Orders and Notifications by the Government of India republished for general information	35—52
Part IB.—Educational Notices ..	359—364
Part II.—Advertisements	289—361
Part III.—Acts of the Bengal Legislative Council—	
The Calcutta Improvement (Amendment) Act, 1934	7—8
Part IV.—Bills introduced in the Bengal Legislative Council, Reports of Select Committees presented or to be presented to that Council, and Bills published before introduction in that Council—	
The Bengal Ferries (Amendment) Bill, 1934, with Statement of Objects and Reasons	85—86
The Estates Partition (Amendment) Bill, 1934, with Statement of Objects and Reasons	87—88
Part V.—Acts of the Indian Legislature assented to by the Governor-General and Ordinances promulgated under section 72 of the Government of India Act ..	Nil
Part VI.—Bills introduced in the Council of State and Legislative Assembly, Reports of Select Committees presented to the Council and Assembly and Bills published under rule 18 of the Indian Legislative Rules	Nil
Supplement No. 11 :—	
Cotton Ginning and Pressing—Major and Minor Works and Navigation—Area leased for irrigation—Weekly Vital Statistics	345—348
Report on the Working of the Licensed Warehouse and Fire Brigade Act for the year ending 31st March 1934 ..	349—372
Prices current—Weekly Weather and Crop Report—Monthly Weather and Crop Report—Weekly gauge readings —Howrah Municipality Declaration	373—384

PART I

Orders and Notifications by the Governor of Bengal, the Government of Bengal, the High Court, Government Treasury, etc.

Orders by His Excellency the Governor of Bengal.

No. 2534A.—6th March 1935.—In exercise of the power conferred on him under clause (*b*) of the proviso to sub-section (2) of section 72A of the Government of India Act, His Excellency the Governor hereby nominates Mr. F. A. Sachse, C.I.E., I.C.S., to be a member of the Bengal Legislative Council for the purpose of the Bengal Development Bill, 1935, with effect from this date until the conclusion of the proceedings in relation to the Bill.

E. N. Blandy,
Chief Secy. to the Govt. of Bengal (offg.).

Orders by the Government of Bengal.

No. 2690A.

Appointments and Transfers.

General.

Jessore-Khulna-Pabna-Bogra.—No. 2478A.—4th March 1935.—Maulvi Sayidur Rahman, officiating Additional District and Sessions Judge, Jessore and Khulna, is appointed temporarily to act as District and Sessions Judge, Pabna and Bogra.

Faridpur - Jessore - Khulna.—No. 2485A. —4th March 1935.—Babu Naranath Mukharji, Subordinate Judge and Assistant Sessions Judge, Faridpur, is appointed temporarily to act as Additional District and Sessions Judge, Jessore and Khulna.

Bakarganj.—No. 2326A.—5th March 1935. —Maulvi Abdul Latif, Deputy Magistrate and Deputy Collector, Dakshin Shahbazpur, Bakarganj, is appointed temporarily to have charge of that subdivision, during the absence, on leave, of Maulvi Mazharul Islam, or until further orders.

Noakhali - Chittagong.—No. 2468A.—5th March 1935.—Mr. A. Whittaker, I.C.S., officiating Magistrate and Collector, Noakhali, is appointed to act, until further orders, as Magistrate and Collector, Chittagong.

Noakhali.—No. 2471A.—5th March 1935.—Mr. Karuna Kumar Hajara, I.C.S., Joint Magistrate and Deputy Collector, Noakhali, is appointed temporarily to act as Magistrate and Collector of that district.

Burdwan Divn. — No. 2500A.—6th March 1935.—Babu Sharat Chandra Guha, Sub-Deputy Collector, on leave, is posted to the Burdwan Division.

Dacca Divn. — No. 2504A. — 6th March 1935.—Maulvi Mafizuddin Fakir, Sub-Deputy Collector, on leave, is posted to the Dacca Division.

Rajshahi Divn. — No. 2508A.—6th March 1935.—Maulvi Saiyid Abdul Ali, Sub-Deputy Collector, on leave, is posted to the Rajshahi Division.

Midnapore.—No. 2512A.—6th March 1935. —Major C. H. Nicholas, 3rd Battalion, 6th Rajputana Rifles, is appointed temporarily to be a Joint Magistrate and Deputy Collector and is posted to the headquarters station of the Midnapore district.

Chittagong - Calcutta. — No. 2522A.—6th March 1935.—The services of Mr. E. S. Simpson, I.C.S., District and Sessions Judge, Chittagong, are placed at the disposal of the Hon'ble the Chief Justice of the High Court of Calcutta.

Calcutta.—No. 2604A.—9th March 1935.—Mr. L. A. Chapman, I.C.S., is appointed to be Under-Secretary to the Government of Bengal in the Finance, Commerce and Marine Departments with effect from the 1st April 1935.

Dinajpur-Jalpaiguri-Rangpur.—No. 2626A. —9th March 1935.—In exercise of the powers conferred by sub-sections (*1*) and (*2*) of section 14 of the Code of Criminal Procedure, 1898 (Act V of 1898), the Governor in Council hereby appoints Babu Sudhansu Sekhar Lahiri, Sub-Deputy Magistrate, Rangpur, to be a Special Magistrate for the districts of Dinajpur, Jalpaiguri and Rangpur for a term not exceeding one month and confers upon him the powers of a Magistrate of the second class in respect of offences under Chapter XVII of the Indian Penal Code within the said districts.

Rajshahi - Malda.—No. 2653A.—9th March 1935.—Mr. S. S. R. Hattiangadi, I.C.S., Joint Magistrate and Deputy Collector, Naogaon, Rajshahi, is appointed to act, until further orders, as District and Sessions Judge, Rajshahi and Malda.

Rajshahi.—No. 2659A.—9th March 1935. —Maulvi Muhammad Hafizur Rahman, Deputy Magistrate and Deputy Collector, Rajshahi, is appointed temporarily to have charge of the Naogaon subdivision of that district.

POLICE.

Calcutta.—No. 2231A.—2nd March 1935.—Mr. T. H. Keston, an Inspector of the Calcutta Police, is appointed to act as an Assistant Commissioner of Police, Calcutta, during the absence, on leave, of Mr. J. Woolley, M.B.E., or until further orders.

Rajshahi.—No. 2544A.—6th March 1935.—The Probationary Assistant Superintendents of Police, named below, who have been selected by His Majesty's Secretary of State for India, are appointed by the Governor in Council to be Assistant District Superintendents of Police for the purposes of the Police Act, 1861 (Act V of 1861), and are posted to the Police Training College at Sardah, Rajshahi:—

Mr. Sachindra Mohan Ghosh.
Mr. Alamgir Mahiuddin Amire Kabir.
Mr. Muhammad Abdul Hai Maswood.

Rajshahi.—No. 2623A.—9th March 1935. —Lieutenant B. W. J. Amphlett is appointed, under section 1 of Act V of 1861, to be a District Superintendent of Police and posted as Additional Superintendent of Police, Rajshahi.

24-Parganas. — No. 2664A. — 9th March 1935.—Mr. W. H. Lewis, I.P., Assistant Superintendent of Police, is posted temporarily to the headquarters station of the 24-Parganas district.

Leave.

GENERAL.

Noakhali.—No. 2222A.—2nd March 1935.—Mr. J. De, I.C.S., District and Sessions Judge, Noakhali, is allowed leave on average pay for six days, under rule 81 (*b*) (*i*) of the Fundamental Rules, with effect from the 25th February 1935.

No. 2318A.—5th March 1935.—Maulvi Muhammad Ishaq, No. II, Sub-Deputy Collector, is allowed leave on average pay up to the 31st March 1935, under the proviso to rule 81 (*b*) (*ii*) of the Fundamental Rules, in extension of the leave granted to him under the orders of the 12th January 1935.

Bakarganj.—No. 2222A.—5th March 1935.—Maulvi Mazharul Islam, Deputy Magistrate and Deputy Collector, Dakshin Shahbazpur, Bakarganj, is allowed leave on average pay for six weeks, under rule 81 (*b*) (*ii*) of the Fundamental Rules, with effect from the 11th February 1935.

Bankura.—No. 2328A.—5th March 1935.—In modification of the orders of the 27th November 1934, Babu Sudhir Kumar Sen Gupta, Sub-Deputy Collector, Bankura, is allowed leave on average pay for eight months, under the proviso to rule 81 (*b*) (*ii*) of the Fundamental Rules, with effect from the 2nd January 1935.

Chittagong.—No. 2466A.—5th March 1935. Mr. A. S. Hands, C.I.E., I.C.S., Magistrate and Collector, Chittagong, is allowed leave on average pay for twenty-six days, under rule 81 (*b*) (*i*) of the Fundamental Rules, with effect from the 1st April 1935, or any subsequent date on which he may be relieved.

No. 2473A.—5th March 1935.—Mr. L. R. Chambers, I.C.S., has been granted by the High Commissioner for India an extension of leave not due on medical certificate for one month on half average pay.

This cancels notification No. 1651A., dated the 15th February 1935.

Calcutta.—No. 2517A.—6th March 1935.—Mr. N. L. Hindley, I.C.S., Registrar, High Court, Calcutta, Appellate Side, is allowed leave on average pay for eight months, under rules 81 (*b*) (*i*) and 82 (*b*) of the Fundamental Rules, with effect from the 21st March 1935, or any subsequent date on which he may be relieved, in combination with study leave for one year under the Study Leave Rules.

Dinajpur.—No. 2538A.—6th March 1935.—Babu Kshitinath Ghosh, Sub-Deputy Collector, Thakurgaon, Dinajpur, is allowed leave on average pay for three months, under rule 81 (*b*) (*ii*) of the Fundamental Rules, with effect from the date on which he may be relieved.

Mymensingh. — No. 2540A. — 6th March 1935.—Babu Subodh Lal Banarji, Sub-Deputy Collector, Kishoreganj, Mymensingh, is allowed leave on average pay for two months, under rule 81 (*b*) (*ii*) of the Fundamental Rules, with effect from the date on which he may be relieved.

Calcutta.—No. 2596A.—9th March 1935.—Mr. N. G. A. Edgley, I.C.S., Secretary to the Government of Bengal, Judicial Department, and Superintendent and Remembrancer of Legal Affairs, Bengal, is allowed leave from the 25th February 1935 to the 31st August 1935, inclusive, viz., leave on average pay for twenty-five days, under rule 81 (*b*) (*i*) of the Fundamental Rules, and leave on half average pay for the remaining period, under rule 81 (*d*) of those Rules.

Khulna.—No. 2601A.—9th March 1935.—Babu Rai Charan Pal, Sub-Deputy Collector, Bagerhat, Khulna, is allowed leave on average pay, on medical certificate, for seven months, under the proviso to rule 81 (*b*) (*ii*) of the Fundamental Rules, with effect from the 16th March 1935.

Dacca.—No. 2609A.—9th March 1935.—Maulvi Saleh Abdur Rahim, Deputy Magistrate and Deputy Collector, on probation, who was employed as Assistant Manager, Dacca Nawab's Estate, is allowed leave on average pay for two months, under rule 81 (*b*) (*ii*) of the Fundamental Rules, with effect from the 20th February 1935.

No. 2670A.—11th March 1935.—Babu Surendra Nath Sen Gupta, No. 1, Sub-Deputy Collector, is allowed leave on average pay up to the 18th April 1935, under rule 81 (*b*) (*ii*) of the Fundamental Rules, in extension of the leave granted to him under the orders of the 5th February 1935.

POLICE.

Calcutta.—No. 2218A.—2nd March 1935.—Mr. J. Woolley, M.B.E., Assistant Commissioner of Police, Calcutta, is allowed leave on average pay for ten months, under rule 81 (*b*) (*i*) and note thereunder, of the Fundamental Rules, with effect from the 9th March 1935.

E. N. BLANDY,
Chief Secy. to the Govt. of Bengal (offg.).

NOTIFICATION.

No. 2576A.—8th March 1935.—In exercise of the powers conferred by rule 15 of the Bengal Electoral Rules the Governor in Council is pleased to direct that the following further amendments shall be made in the Bengal Electoral Regulations published with notification No. 1627A.R., dated the 11th August 1923, namely:—

In sub-regulation (1) of regulation L and in sub-regulation (2) of regulation LI of the said Regulations, *for* the words "Bengal Legislative Council" the words "Government of Bengal in the Legislative Department" shall be substituted.

E. N. BLANDY,
Chief Secy. to the Govt. of Bengal (offg.)

POLITICAL DEPARTMENT.

Political.

NOTIFICATIONS.

No. 2689P.—11th March 1935.—In exercise of the power conferred by section 24 of the Bengal Suppression of Terrorist Outrages Act, 1932 (Ben. Act XII of 1932), the Governor in Council is pleased to invest Babu Niranjan Mohan Bardhan, Deputy Magistrate, Madaripur, district Faridpur, with the powers of a Special Magistrate under the said Act.

No. 2695P.—9th March 1935.—In exercise of the power conferred by section 24 of the Bengal Suppression of Terrorist Outrages Act, 1932 (Ben. Act XII of 1932), the Governor in Council is pleased to invest Babu Mangal Kumar Acharji, Deputy Magistrate, Dinajpur, with the powers of a Special Magistrate under the said Act.

Rajshahi.—No. 2699P.—11th March 1935.—The following draft of rules, which it is proposed to make in exercise of the powers conferred by section 15 of the Ancient Monuments Preservation Act, 1904 (VII of 1904), and in supersession of the rules published with this department notification No. 4547P., dated the 1st February 1932, is published, as required by sub-section (*1*) of that section, for the information of all persons likely to be affected thereby, and notice is hereby given that the said draft will be taken into consideration on or after the 14th April 1935.

Any objection or suggestion which may be received in respect of the draft before the said date will be considered by the Governor in Council:—

Draft rules.

1. The admission of the public to the excavated remains of ancient archæological buildings at Paharpur, subdivision Naogaon, police-station Badalgachi, district Rajshahi, shall be by a ticket only, which is to be obtained from the officer of the Archæological Department stationed at Paharpur on payment of fees at the following rates:—

Persons above 12 years—Two annas each.
Children between 3 and 12 years—One anna each.
Bona fide students of a recognised educational institution under the charge of a responsible teacher—One anna each.

(Application for the students' concession ticket shall be made to the Superintendent, Archæological Section, Indian Museum, and Archæological Survey, Eastern Circle, Calcutta, by the head of the institution concerned, not less than 10 days before the date of the proposed visit.)

2. The ticket shall be shown at the gate of the ruins and made over to the gate-keeper on duty.

3. Visitors shall not touch the antiquities or disfigure the monuments.

4. Visitors shall not take photographs of the exposed monuments or enter the trenches when work is in progress or converse with the workmen.

5. Any person committing a breach of these rules shall be punishable with fine which may extend to Rs. 20.

CORRIGENDUM.

No. 2721P.—12th March 1935.—In notification No. 1110P.S., dated the 1st March 1935, published in the *Calcutta Gazette*, dated the 7th March 1935, *delete* the words "Labourers and" in item No. 11 of the Schedule.

E. N. BLANDY,
Chief Secy. to the Govt. of Bengal (offg.).

Special.

NOTIFICATION.

No. 6809X.—14th March 1935.—Whereas in the opinion of the Government of Bengal there are reasonable grounds for believing that Babu Abani Lahiry, son of Babu Nabin Chandra Lahiry, of village Kishoreganj, in the district of Mymensingh, and of Narayan Ausadhalaya, Karimganj (Sylhet), is a person in respect of whom an order may lawfully be made under sub-section (*1*) of section 2 of the Bengal Criminal Law Amendment Act, 1930; and

Whereas the Governor in Council on the 4th January 1935 in exercise of the powers conferred by the said section 2 was pleased to order the said Babu Abani Lahiry to be committed to custody in the nearest District or Central Jail, and the arrest without warrant of the said Babu Abani Lahiry at any place where he might be found by any police officer with a view to his commitment to custody; and

Whereas the said Babu Abani Lahiry has not been arrested and the said order under section 2 of the said Act has not been served personally on the said person, and whereas due diligence has in the opinion of the Local Government been exercised to effect such personal service;

Now, therefore, the Governor in Council in exercise of the powers conferred by sub-section (*2*) of section 3 of the Bengal Criminal Law Amendment Act, 1930, is pleased to direct the said Babu Abani Lahiry, son of Babu Nabin Chandra Lahiry, of village Kishoreganj, in the district of Mymensingh, and of Narayan Ausadhalaya, Karimganj (Sylhet), to appear before the Superintendent of Police, Mymensingh, at Mymensingh, within 15 days of this date for the purpose of receiving the aforesaid order.

S. N. ROY,
Addl. Secy. to the Govt. of Bengal.

Jails.

NOTIFICATION.

Rajshahi.—No. 881P.J.—6th March 1935.—Mr. Chas. A. W. Luke, lately officiating Superintendent, Rajshahi Central Jail, has been granted by the High Commissioner for India an extension of leave not due on half average pay for one month from the 27th March 1935, under rule 81 (*c*) (*i*) of the Fundamental Rules.

E. N. BLANDY,
Chief Secy. to the Govt. of Bengal (offg.).

POLICE DEPARTMENT.

NOTIFICATIONS.

24-Parganas.—No. 1381Pl. — 9th March 1935.—In exercise of the power conferred by section 4 (*l*) (*s*) of the Code of Criminal Procedure, 1898 (Act V of 1898), and in supersession of all previous notifications published in the *Calcutta Gazette* relating to the area and railway stations included within the Chitpur Railway police-station, the Governor in Council is pleased to declare that the said railway police-station is abolished and that the area and railway stations, respectively, specified in columns 1 and 2 of the following schedule which have hitherto been included in that police-station, shall henceforth be included within the jurisdiction of Sealdah Railway police-station :—

Schedule.

Area according to mileage of railway.	Names of railway stations within the jurisdiction of police-station.
1	2
Miles from Calcutta, 0 to 6 miles.	Chitpur. Ultadanga. Cossipur. From south of Canal junction to Pattipuker Goods Shed.

24-Parganas-Nadia-Jessore. — No. 1382Pl. —9th March 1935.—In exercise of the power conferred by section 4 (*l*) (*s*) of the Code of Criminal Procedure, 1898 (Act V of 1898), and in supersession of all previous notifications published in the *Calcutta Gazette* so far as they relate to the area and railway stations included within the Bongaon Railway police-station, the Governor in Council is pleased to declare that the said police-station is abolished and that the areas and railway stations, respectively, specified in columns 2 and 3 of the following schedules A, B and C which have hitherto been included in that police-station, shall henceforth be included within the jurisdictions of the railway police-stations mentioned in column 1 :—

Schedule A.

Railway police-station.	Area according to mileage of railway.		Names of railway stations within the jurisdiction of police-station.
1	2		3
Khulna ..	Miles from Calcutta. 40¼ to 65¼ .. 25 59¼ to 65¼ .. 6¼	31¼	Chandpara. Bongaon. Benapole. Nabharan. Godkhali. Gopalnagar.

Schedule B.

Ranaghat ..	Miles from Calcutta. 45¼ to 59¼ .. 13¼		Gangnapur. Majirgram.

Schedule C.

Railway police-station.	Area according to mileage of railway.		Names of railway stations within the jurisdiction of police-station.
1	2		3
Sealdah ..	Miles from Calcutta. 4¼ to 40¼ ..	36	Dum-Dum Cantonment. Birati. Madhyamgram. Hridaypur. Barasat. Bamangachi. Dattapukur. Dogachhia. Guma. Habra. Maslandpur. Gobordanga.

Rangpur.—No. 1383Pl.—9th March 1935. —In exercise of the power conferred by section 4 (*l*) (*s*) of the Code of Criminal Procedure, 1898 (Act V of 1898), and in supersession of all previous notifications published in the *Calcutta Gazette* so far as they relate to the area and railway stations included within the Saidpur Railway police-station, the Governor in Council is pleased to declare that the said railway police-station is abolished and that the areas and railway stations, respectively, specified in columns 2 and 3 of the following Schedules A and B which have hitherto been included in that police-station, shall henceforth be included within the jurisdictions of the railway police-stations mentioned in column 1 :—

Schedule A.

Railway police-station.	Area according to mileage of railway.		Names of railway stations within the jurisdiction of police-station.
1	2		3
Parbatipur ..	Miles from Calcutta. 239 to 254¼ .. 15¼		Saidpur. Daroani.

Schedule B.

Siliguri ..	Miles from Calcutta. 254¼ to 280¼ .. 25¼		Nilphamari. Domar. Chilhati.

E. N. BLANDY,
Chief Secy. to the Govt. of Bengal (offg.).

Orders by the Inspector-General of Police, Bengal.

Calcutta.—No. 2361A.—6th March 1935.— **Dacca - 24-Parganas.**—Sergeant A. W. E. Langley of Dacca (officiating Town Inspector, 24-Parganas) is appointed a probationary Inspector to fill the permanent vacancy caused by the retirement of Mr. W. Seaman, Inspector, and is posted to the 24-Parganas.

No. 2365A.—6th March 1935.—**Birbhum-24-Parganas.**—Babu Shailesh Chandra Sinha, Inspector, Birbhum (now employed in the Intelligence Branch), is transferred temporarily to the District Intelligence Branch, 24-Parganas, to fill a temporary post sanctioned in Government order No. 59Pl.S., dated the 4th February 1935.

T. J. A. CRAIG,
Inspector-General of Police.

Calcutta Police Notifications.

No. 2008.—8th March 1935.—In exercise of the powers conferred by clauses (*b*) and (*f*) of sub-section (*1*) of section 62 of the Calcutta Police Act, 1866 (Bengal Act IV of 1866) and clauses (*b*) and (*f*) of sub-section (*1*) of section 39 of the Calcutta Suburban Police Act, 1866 (Bengal Act II of 1866), the Commissioner of Police, Calcutta, with the previous sanction of the Governor in Council, proposes to make the following amendment to the rules for the regulation of processions in Part III of the Rules for the Regulation of Traffic in Calcutta and Suburbs, 1931, published under Calcutta Police Notification No. 134, dated the 6th January 1932, at pages 37-99, Part I of the *Calcutta Gazette*, dated the 14th January 1932:—

Amendment.

Under heading (*c*)—Processions on account of the Muhammadan festival of the Mohurrum, in rule (*1*), *insert* the following condition as—

(*b*) "No music shall be played in any of the streets or thoroughfares in the town and suburbs of Calcutta except on the streets and thoroughfares and on the day and between the hours specified in this license."

Re-number the rest as (*c*), (*d*), etc.

In condition (*b*) (re-numbered as *c*), *add* the following sentence:—

"Such sanction shall be produced when required by any police officer."

In condition (*c*) (re-numbered as *d*), (1) *insert* the words "disobedience of lawful police orders or" after the words "in the event of any";

In condition (*e*) (re-numbered as *f*), *insert* the following after the word "weapon":—

"or let off or throw any firework within the limits of the town or suburbs of Calcutta".

Insert the following as new conditions:—

(*i*) "The licensee shall, at the direction of the police officer in charge of the procession, so regulate the conduct of the procession that the immersion ceremony at Karbala or arrival at the Darga shall be completed by the procession not later than the hour specified in this license in column 5 on the reverse".

"Notwithstanding anything contained in the license, the licensee and the processionists shall at all times obey promptly lawful orders of the police officer in charge of the Akhara or procession".

(*k*) "Any person violating any of the above rules or any of the rules or conditions set forth in any sanction or license or otherwise behaving in a disorderly way or making a disturbance of any kind will be immediately arrested and dealt with according to law".

Office of the Commissioner of Police, Calcutta.

License, under the provisions of the Police Act, is hereby granted to.....

of.....

to take a Mohurrum procession with music on the dates, places and hours set out below.

The conditions under which this license is granted are given on the reverse hereof.

Calcutta,
The 193 . *Inspector,*
Pass Department.
Dy. Commissioner of Police.

Day of Mohurrum.	Date.	Route.	Hour procession shall start.	Hour procession shall finish by.
1	2	3	4	5

Conditions.

1. All music shall cease in the neighbourhood of hospitals and of churches, temples, or other places of worship during the time of public worship.

2. No music shall be played in any of the streets or thoroughfares in the town and suburbs of Calcutta except on the streets and thoroughfares and on the day and between the hours specified in this license.

3. Sanction to carry a taboot, tajia or punja shall be granted to a Muhammadan only; and no person shall in any street erect or carry about a taboot, tajia or punja except with the sanction in writing of the Commissioner of Police. Such sanction shall be produced when required by any police officer.

4. The licensee shall be responsible for the peaceful behaviour of all the persons composing his procession and in the event of any disobedience of lawful police orders or riotous or disorderly conduct on the part of the members composing such procession, any police officer not below rank of head constable may, should he think fit, at once withdraw such license by verbal order and all persons composing such assembly or procession shall immediately disperse.

5. Two or more taboots, tajias or punjas shall not be carried abreast on any street and when two processions bearing taboots, tajias or punjas meet, the members of each procession shall keep to the left side of the street.

6. No persons taking part in any procession or otherwise attending or being connected with any procession shall carry a sword, club or other offensive weapon or let off or throw any firework within the limits of the town or suburbs of Calcutta.

7. No tajia shall be over 13 feet in height.

8. The licensee shall, before making use of this license, register it at the Police Section named herein.

9. The licensee shall, at the direction of the police officer in charge of the procession, so regulate the conduct of the procession that the immersion ceremony at Karbala or arrival at the Darga shall be completed by the procession not later than the hour specified in this license in column 5 on the reverse.

10. Notwithstanding anything contained in the license, the licensee and the processionists shall at all times obey promptly lawful orders of the police officer in charge of the Akhara or procession.

11. Any person violating any of the above rules or any of the rules or conditions set forth in any sanction or license or otherwise behaving in a disorderly way or making a disturbance of any kind will be immediately arrested and dealt with according to law.

In exercise of the powers conferred by clauses (*b*) and (*f*) of sub-section (*1*) of section 62 of the Calcutta Police Act, 1866 (Bengal Act IV of 1866), and clauses (*b*) and (*f*) of sub-section (*1*) of section 39 of the Calcutta Suburban Police Act, 1866 (Bengal Act II of 1866), the Commissioner of Police, Calcutta, with the previous sanction of the Governor in Council proposes to make the following amendment to the rules for the regulation of processions in Part III of the Rules for the Regulation of Traffic in Calcutta and Suburbs, 1931, published under Calcutta Police Notification No. 134, dated the 6th January 1932, at pages 37-99, Part I of the *Calcutta Gazette*, dated the 14th January 1932:—

Amendment.

Under heading (*a*)—Ordinary processions with music—

Delete rules 7 and 8 at page 43 of the rules.

Insert the existing rules 7 and 8 as conditions (*i*) and (*j*) under rule 2 of the same rules.

In License Form (A) at page 65 of the rules, *insert* the following after condition 8 as conditions 9 and 10:—

Condition 9.—The holder of a license shall be bound to obey all reasonable directions he may receive from the police officers accompanying the procession.

Condition 10.—Every license-holder shall be responsible for the peaceful behaviour of all the persons composing his procession, and, in the event of any riotous or disorderly conduct on the part of the members composing such procession, any police officer not below the rank of head constable may, should he think fit, at once withdraw such license by verbal order and all persons composing such assembly or procession shall immediately disperse.

No. Fee. Rupees.

Fee for Police—

European Sergeants	..	at Rs.	each
Head constables	..	at „	„
Constables	..	at „	„

Received Rupees only.

Pass Clerk.

Office of the Commissioner of Police, Calcutta.

$\frac{Town}{Suburbs}$ *of Calcutta.*

License is hereby granted under the provisions of

Section 62 of the Calcutta Police Act, 1866.
Section 39 of the Calcutta Suburban Police Act, 1866.

The day of 19

To

for a Procession with Music to pass with musicians from

Street to Street within the $\frac{Town}{Suburbs}$ of Calcutta

proceeding *via*

only

between the hours of M. and M. of the 19

upon the conditions stated on the reverse.

Police Section

Pass Clerk.

Deputy Commissioner of Police.

Conditions.

(*a*) The holder of a license shall, before making use of it, register it at the police section named therein.

(*b*) No musical instrument shall be sounded by any person taking part in the procession for which a license is granted except in the streets therein specified and during the hours specified in the license, and not more than the specified number of musicians shall be employed or take part in such procession.

(*c*) All music shall cease in the neighbourhood of hospitals and of churches, mosques, temples or other places of worship during the time of public worship.

(*d*) The procession shall pass only by the streets specified in the license.

(*e*) The holder of the license shall make use of the same only on the day and during the precise hours for which it is granted.

(*f*) The procession shall always pass by the left side of the street.

(*g*) The members of the procession shall not carry sticks, clubs or other offensive weapons.

(*h*) No fire shall be carried, nor fireworks or blank cartridges discharged during the course of the procession.

(*i*) The holder of a license shall be bound to obey all reasonable directions he may receive from the police officers accompanying the procession.

(*j*) Every license-holder shall be responsible for the peaceful behaviour of all the persons composing his procession, and, in the event of any riotous or disorderly conduct on the part of the members composing such procession, any police officer not below the rank of head constable may, should he think fit, at once withdraw such license by verbal order and all persons composing such assembly or procession shall immediately disperse.

N.B.—Every person contravening any of the conditions of this license is liable to arrest by the police and on conviction to a fine of fifty rupees.

L. H. COLSON,

Commissioner of Police, Calcutta.

JUDICIAL DEPARTMENT.

No. 2691A.

Powers.

Darjeeling.—No. 2226A.—2nd March 1935. —Mr. Basanta Kumar Mukharji, Deputy Magistrate, Darjeeling, is vested with powers under section 524 of the Code of Criminal Procedure.

E. N. BLANDY,
Chief Secy. to the Govt. of Bengal (offg.).

Appointments and Transfers.

Hooghly.—No. 2020J.—2nd March 1935.—In exercise of the powers conferred by sections 14 and 15 and the proviso to section 357 of the Code of Criminal Procedure, 1898 (Act V of 1898), the Governor in Council is pleased—

(*a*) to confer upon Babu Purna Chandra Chatarji the powers of a Magistrate of the first class, in the district of Hooghly, for a period of three years from the 3rd March 1935, in respect to such cases as may be made over to him within the limits of the Serampore subdivision of the said district,

(*b*) to direct that he shall, in addition to sitting singly, sit as a member of the Serampore bench in the said district, and

(*c*) to direct him to take down evidence in the English language.

Jessore.—No. 2038J.—2nd March 1935.—In exercise of the powers conferred by sections 14 and 15 and the proviso to section 357 of the Code of Criminal Procedure, 1898 (Act V of 1898), the Governor in Council is pleased—

(*a*) to confer upon Babu Sarba Bijoy Roy Chaudhuri the powers of a Magistrate of the third class, in the district of Jessore, for a period of three years from the date of this notification, in respect to such cases as may be made over to him within the limits of the Magura subdivision of the said district,

(*b*) to direct that he shall, in addition to sitting singly, sit as a member of the Magura bench in the said district, and

(*c*) to direct him to take down evidence in the English language.

Jessore.—No. 2040J.—2nd March 1935.—In exercise of the powers conferred by sections 14 and 15 and the proviso to section 357 of the Code of Criminal Procedure, 1898 (Act V of 1898), the Governor in Council is pleased—

(*a*) to confer upon Maulvi Fazlul Karim the powers of a Magistrate of the third class, in the district of Jessore, for a period of three years from the date of this notification,

(*b*) to direct him to sit as a member of the Magura bench in the said district, and

(*c*) to direct him to take down evidence in the English language.

Mymensingh. — No. 2110J.—5th March 1935.—In exercise of the powers conferred by sections 14 and 15 and the proviso to section 357 of the Code of Criminal Procedure, 1898 (Act V of 1898), the Governor in Council is pleased—

(*a*) to confer upon each of the gentlemen named below, the powers of a Magistrate of the third class, in the district of Mymensingh, for a period of three years from the date of this notification,

(*b*) to direct him to sit as a member of the Sherpur bench in the said district, and

(*c*) to direct him to take down evidence in the English language—

Babu Helis Chandra Chaudhuri.
Maulvi Mirza Ashrafuddin Hyder.

Khulna.—No. 2211J.—27th February 1935. —In exercise of the powers conferred by sections 14 and 15 of the Code of Criminal Procedure, 1898 (Act V of 1898), the Governor in Council is pleased—

(*a*) to confer upon Babu Ram Narayan Ray Chaudhuri the powers of a Magistrate of the third class, in the district of Khulna, for a period of three years from the date of this notification, and

(*b*) to direct him to sit as a member of the Bagerhat bench in the said district.

Murshidabad. — No. 2213J. — 6th March 1935.—In exercise of the powers conferred by sections 14 and 15 and the proviso to section 357 of the Code of Criminal Procedure, 1898 (Act V of 1898), the Governor in Council is pleased—

(*a*) to confer upon Babu Bhima Pada Ghosh the powers of a Magistrate of the second class, in the district of Murshidabad, for a period of three years from the date of this notification, in respect to such cases as may be made over to him within the limits of the Kandi subdivision of the said district,

(*b*) to direct that he shall, in addition to sitting singly, sit as a member of the Kandi bench in the said district, and

(*c*) to direct him to take down evidence in the English language.

Leave.

Mymensingh. — No. 2226J. — 8th March 1935.—Babu Manmohan Banarji, Subordinate Judge of Mymensingh, is allowed leave for the period from the 26th March 1935 to the 24th July 1935, viz., leave on average pay for twenty-four days, under rules 81 (*b*) (*ii*) and 82 (*b*) of the Fundamental Rules, and leave on half average pay for the remaining period, under rule 81 (*d*) of those rules.

No. 2327J. — 9th March 1935.—Maulvi Husibuddin Ahmad, Subordinate Judge, is allowed leave on half average pay for the period from the 1st March 1935 to the 15th April 1935, under rule 81 (*d*) of the Fundamental Rules, in extension of the leave already granted to him.

Powers.

Murshidabad. — No. 2148J. — 5th March 1935.—In exercise of the power conferred by the proviso to section 357 of the Code of Criminal Procedure, 1898 (Act V of 1898), the Governor in Council is pleased to direct Maulvi Saiyid Abul Fazal, an Honorary Magistrate of the Jangipur bench, in the district of Murshidabad, to take down evidence in the English language.

Rangpur.—No. 2331J.—9th March 1935.—In exercise of the powers conferred by section 14 of the Criminal Procedure Code, 1898 (Act V of 1898), the Governor in Council is pleased to vest Babu Srish Chandra Sanyal, an Honorary Magistrate of the Lalmonirhat Bench, Rangpur, with powers under the Bengal Public Gambling Act, 1867 (Bengal Act II of 1867), and the Police Act V of 1861, arising within that part of Lalmonirhat to which the provisions of the said Act have been extended.

NOTIFICATIONS.

Howrah.—No. 2142J.—5th March 1935.—In exercise of the power conferred by section 65 of the Bengal Village Self-Government Act, 1919 (Bengal Act V of 1919), the Governor in Council is pleased to appoint Babu Jatindra Nath Ghosh, a member of the Dakshin Jhapardaha union board within the Domjur police-station in the Sadar subdivision of the Howrah district, to be, during his term of office as such member, a member of the union bench within the jurisdiction of the said union board for the purposes of that section.

Howrah.—No. 2143J.—5th March 1935.—In exercise of the power conferred by section 73 of the Bengal Village Self-Government Act, 1919 (Bengal Act V of 1919), the Governor in Council is pleased to appoint Babu Jatindra Nath Ghosh, a member of the Dakshin Jhapardaha union board within the Domjur police-station in the Sadar subdivision of the Howrah district, to be, during his term of office as such member, a member of the union court within the jurisdiction of the said union board for the purposes of that section.

24-Parganas. — No. 2145J. — 5th March 1935.—In exercise of the power conferred by section 65 of the Bengal Village Self-Government Act, 1919 (Bengal Act V of 1919), the Governor in Council is pleased to appoint the following members of the union boards mentioned below, to be, during their term of office as such members, union benches within the jurisdiction of the union boards of which they are, respectively, members for the purposes of that section:—

Sadar subdivision, 24-Parganas district.

Mahestola police-station.

Mahestola union board.

Babu Phani Bhusan Chatarji.
Babu Purno Chandra Sardar.
Munshi Joynal Abedin Mufti.
Munshi Kader Bux Mollah.

Ganipur union board.

Khan Sahib Maulvi Wachel Mollah.
Munshi Mozaffer Hossain.
Munshi Abdur Raschid.
Babu Beni Madhab Mandal.

2. This notification will take effect from the date of the first meeting of the reconstituted union boards at which a quorum is present.

24-Parganas. — No. 2146J. — 5th March 1935.—In exercise of the power conferred by section 73 of the Bengal Village Self-Government Act, 1919 (Bengal Act V of 1919), the Governor in Council is pleased to appoint the following members of the union boards mentioned below, to be, during their term of office as such members, union courts within the jurisdiction of the union boards of which they are, respectively, members for the purposes of that section:—

Sadar subdivision, 24-Parganas district

Mahestola police-station.

Mahestola union board.

Babu Phani Bhusan Chatarji.
Babu Purno Chandra Sardar.
Munshi Joynal Abedin Mufti.
Munshi Kader Bux Mollah.

Ganipur union board.

Khan Sahib Maulvi Wachel Mollah.
Munshi Mozaffer Hossain.
Munshi Abdur Raschid.
Babu Beni Madhab Mandal.

2. This notification will take effect from the date of the first meeting of the reconstituted union boards at which a quorum is present.

24-Parganas. — No. 2150J. — 5th March 1935.—In exercise of the power conferred by section 65 of the Bengal Village Self-Government Act, 1919 (Bengal Act V of 1919), the Governor in Council is pleased to appoint the following members of the Nanghi union board within the Budge-Budge police-station in the Sadar subdivision of the 24-Parganas district, to be, during their term of office as such members, union bench within the jurisdiction of the said union board for the purposes of that section:—

Babu Atul Krishna Pal.
Babu Lalit Mohon Chatarji.
Munshi Shaikh Khater Ali.
Babu Krishna Chandra Sarkar.

2. This notification will take effect from the date of the first meeting of the reconstituted union board at which a quorum is present.

24-Parganas. — No. 2151J. — 5th March 1935.—In exercise of the power conferred by section 73 of the Bengal Village Self-Government Act, 1919 (Bengal Act V of 1919), the Governor in Council is pleased to appoint the following members of the Nanghi union board within the Budge-Budge police-station in the Sadar subdivision of the 24-Parganas district, to be, during their term of office as such members, union court within the jurisdiction of the said union board for the purposes of that section:—

Babu Atul Krishna Pal.
Babu Lalit Mohon Chatarji.
Munshi Shaikh Khater Ali.
Babu Krishna Chandra Sarkar.

2. This notification will take effect from the date of the first meeting of the reconstituted union board at which a quorum is present.

Bankura.—No. 2153J.—5th March 1935. — In exercise of the power conferred by section 65 of the Bengal Village Self-Government Act, 1919 (Bengal Act V of 1919), the Governor in Council is pleased to appoint the following members of the union boards mentioned below, to be, during their term of office as such members, union benches within the jurisdiction of the union boards of which they are, respectively, members for the purpose of that section:—

Vishnupur subdivision, Bankura district.

Vishnupur police-station.

Uliara union board.

Babu Hrishikesh Gangali.
Babu Bibhuti Bhusan Gangali.
Babu Abhiram Sen.
Munshi Sajed Rahman.

Radhanagar union board.

Babu Bidhu Bhusan Banarji.
Babu Amulya Ratan Ray.
Babu Hem Chandra Biswas.
Babu Ashutosh Mukharji.

Ajodhya union board.

Dr. Chandra Bhusan Banarji.
Babu Kedar Nath Misra.
Babu Barid Baran Banarji.
Babu Mohitosh Mukharji.

Jaipur police-station.

Rauthkhanda union board.

Babu Bhuban Mohan Biswas.
Babu Ramdas Bhakta.
Babu Sudhir Chandra Ray.
Munshi Fazlu Midhya.

Hetia union board.

Babu Tinkari Gangali.
Babu Debendra Nath Adhikari.
Babu Janaki Nath Chaudhuri.
Munshi Karimdad Mian.

Salda union board.

Babu Radharaman Ghatak.
Dr. Surya Narayan Barat.
Dr. Jatindra Nath Datta.
Babu Nabadwip Chandra Panja.

Kuchiakole union board.

Babu Kshetra Mohan Singha Thakur.
Babu Kesab Chandra Banarji.
Babu Nalini Nath Goswami.
Babu Bankim Chandra De.

Maynapur union board.

Rai Sahib Akalanka Chandra Mukharji.
Babu Bhutnath De.
Babu Kunja Behari Barui.
Sheikh Amin Jamadar.

Kotulpur police-station.

Madanmohanpur union board.

Babu Gostha Behari Ghose.
Babu Gostha Behari Patra.
Babu Surendra Nath Ray.
Munshi Abdul Khalil.

Kotulpur union board.

Babu Barada Prasad Ray.
Babu Atul Krishna Bhadra.
Babu Tarapada Nag.
Munshi Abdul Tahid Midhya.

Desra-Koalpara union board.

Dr. Govinda Chandra Pal.
Babu Haripada Ghosal (No. I).
Babu Pasupati Nandi.
Maulvi Abdul Based Khan.

This notification will take effect from the date of the first meeting of the reconstituted union boards at which a quorum is present.

Bankura.—No. 2154J.—5th March 1935.— In exercise of the power conferred by section 73 of the Bengal Village Self-Government Act, 1919 (Bengal Act V of 1919), the Governor in Council is pleased to appoint the following members of the union boards mentioned below, to be, during their term of office as such members, union courts within the jurisdiction of the union boards of which they are, respectively, members for the purpose of that section:—

Vishnupur subdivision, Bankura district.

Vishnupur police-station.

Uliara union board.

Babu Hrishikesh Gangali.
Babu Bibhuti Bhusan Gangali.
Babu Abhiram Sen.
Munshi Sajed Rahman.

Radhanagar union board.

Babu Bidhu Bhusan Banarji.
Babu Amulya Ratan Ray.
Babu Hem Chandra Biswas.
Babu Ashutosh Mukharji.

Ajodhya union board.

Dr. Chandra Bhusan Banarji.
Babu Kedar Nath Misra.
Babu Barid Baran Banarji.
Babu Mohitosh Mukharji.

Jaipur police-station.

Rauthkhanda union board.

Babu Bhuban Mohan Biswas.
Babu Ramdas Bhakta.
Babu Sudhir Chandra Ray.
Munshi Fazlu Midhya.

Hetia union board.

Babu Tinkari Gangali.
Babu Debendra Nath Adhikari.
Babu Janaki Nath Chaudhuri.
Munshi Karimdad Mian.

Salda union board.

Babu Radharaman Ghatak.
Dr. Surya Narayan Barat.
Dr. Jatindra Nath Datta.
Babu Nabadwip Chandra Panja.

Kuchiakole union board.

Babu Kshetra Mohan Singha Thakur.
Babu Kesab Chandra Banarji.
Babu Nalini Nath Goswami.
Babu Bankim Chandra De.

Maynapur union board.

Rai Sahib Akalanka Chandra Mukharji.
Babu Bhutnath De.
Babu Kunja Behari Barui.
Sheikh Amin Jamadar.

Kotulpur police-station.

Madanmohanpur union board.

Babu Gostha Behari Ghose.
Babu Gostha Behari Patra.
Babu Surendra Nath Ray.
Munshi Abdul Khalil.

Kotulpur union board.

Babu Barada Prasad Ray.
Babu Atul Krishna Bhadra.
Babu Tarapada Nag.
Munshi Abdul Tahid Midhya.

Desra-Koalpara union board.

Dr. Govinda Chandra Pal.
Babu Haripada Ghosal (No. I).
Babu Pasupati Nandi.
Maulvi Abdul Based Khan.

This notification will take effect from the date of the first meeting of the reconstituted union boards at which a quorum is present.

Khulna.—No. 2244J.—8th March 1935.—In exercise of the power conferred by section 65 of the Bengal Village Self-Government Act, 1919 (Bengal Act V of 1919), the Governor in Council is pleased to appoint the following members of the union boards mentioned below, to be, during their term of office as such members, union benches within the jurisdiction of the union boards of which they are, respectively, members for the purposes of that section:—

Sadar subdivision, Khulna district.

Phultala police-station.

Damodar union board.

Babu Promode Kumar Bose.
Babu Probodh Chandra Bose.
Munshi Abdur Rahman Bhuiya.
Munshi Sekmatulla Molla.

Daulatpur police-station.

Goalpara-Boyra union board.

Babu Amarendra Nath Das.
Babu Isti Charan Biswas.
Babu Harendra Nath Das.
Munshi Abdul Khaleque.

Khulna.—No. 2245J.—8th March 1935.—In exercise of the power conferred by section 73 of the Bengal Village Self-Government Act, 1919 (Bengal Act V of 1919), the Governor in Council is pleased to appoint the following members of the union boards mentioned below, to be, during their term of office as such members, union courts within the jurisdiction of the union boards of which they are, respectively, members for the purposes of that section:—

Sadar subdivision, Khulna district.

Phultala police-station.

Damodar union board.

Babu Promode Kumar Bose.
Babu Probodh Chandra Bose.
Munshi Abdur Rahman Bhuiya.
Munshi Sekmatulla Molla.

Daulatpur police-station.

Goalpara-Boyra union board.

Babu Amarendra Nath Das.
Babu Isti Charan Biswas.
Babu Harendra Nath Das.
Munshi Abdul Khaleque.

ERRATUM.

No. 2064J.—2nd March 1935.—In notification No. 1350J., dated the 14th February 1935, published at page 355 of Part I of the *Calcutta Gazette* of the 21st February 1935, *for* "Mr. Mioncher Hormasjee Dastoor" *read* "Mr. Minocher Hormasjee Dastoor."

T. ROXBURGH,
Secy. to the Govt. of Bengal (offg.).

LOCAL SELF-GOVERNMENT DEPARTMENT.

NOTIFICATIONS.

Minister-in-charge: The Hon'ble Sir Bijoy Prasad Singh Roy, Kt.

Hooghly.—No. 1843M.—6th March 1935.—In exercise of the power conferred by section 420 of the Bengal Municipal Act, 1932 (Bengal Act XV of 1932), the Government of Bengal (Ministry of Local Self-Government) are pleased to extend the provisions of that section to the Hooghly-Chinsura Municipality in the district of Hooghly.

No. 1845M.—6th March 1935.—In exercise of the power conferred by clause (*b*) of sub-section (*2*) of section 123G of the Calcutta Municipal Act, 1923 (Bengal Act III of 1923), the Government of Bengal (Ministry of Local Self-Government) are pleased to make the following rule:—

Rule.

Prosecutions under sub-section (*5*) of section 54A of the Calcutta Municipal Act, 1923, shall be instituted as ordinary complaint cases under the procedure provided in Chapter XVI of the Code of Criminal Procedure, 1898, on the complaint of the Executive Officer, or of the Commissioner of Police, Calcutta, or of any person authorised in writing in this behalf by either the Executive Officer or the Commissioner of Police, Calcutta.

No. 1854M.—6th March 1935.—In exercise of the power conferred by clause (*b*) of section 44 of the Bengal Municipal Act, 1932 (Bengal Act XV of 1932), the Government of Bengal (Ministry of Local Self-Government) are pleased to make the following amendment in the rules published with notification No. 4063M., dated the 1st September 1934:—

Amendment.

In the second line of clause (*1*) of rule 17, *delete* the words "at a meeting".

Dinajpur.—No. 1890M.—6th March 1935.—In exercise of the power conferred by section 420 of the Bengal Municipal Act, 1932 (Bengal Act XV of 1932), the Government of Bengal (Ministry of Local Self-Government) are pleased to extend the provisions of that section to the Dinajpur Municipality.

Khulna.—No. 1924M.—7th March 1935.—The following draft of a rule, which the Government of Bengal (Ministry of Local Self-Government) propose to make under sub-section (*1*) of section 19 of the Bengal Municipal Act, 1932 (Bengal Act XV of 1932), is published for the information of persons likely to be affected thereby.

2. The draft rule will be taken into consideration on the 10th April 1935, and any objection or suggestion received by the undersigned through the District Magistrate before that date will be duly considered:—

Draft rule.

In the Debhatta Municipality, in the district of Khulna, out of nine seats to which Commissioners are to be elected under section 16 of the Bengal Municipal Act, 1932 (Bengal Act XV of 1932), two seats shall be reserved for the Muhammadan community which is declared to be a minority community in the said municipality for the purpose of the election.

Bakarganj.—No. 1926L.S.-G.—7th March 1935.—In exercise of the powers conferred by clauses (*a*) and (*b*) of section 31 of the Cattle Trespass Act, 1871 (Act I of 1871), and in modification of orders contained in clauses (*a*) and (*b*) of notification No. 317½T.M., dated the 16th August 1913, and in clauses (*a*) and (*b*) of notification No. 1428L.S.-G., dated the 18th May 1914, the Government of Bengal (Ministry of Local Self-Government) are pleased to—

(*a*) transfer to the union board, named below, in the district of Bakarganj, all the functions of the Magistrate of that district, under Chapters II and III of the said Act I of 1871, in respect of all pounds within the local areas subject to the jurisdiction of the said union board, and

(*b*) direct that the whole of the surplus accruing under section 18 of the said Act I of 1871, in the area within the jurisdiction of the said union board in the district of Bakarganj, named below, shall be placed to the credit of the union fund constituted for the said union board—

Pirojpur subdivision.

Mathbaria police-station.

Halta-Gulishakhali union board.

Bakarganj.—No. 1928L.S.-G.—7th March 1935.—In exercise of the powers conferred by clauses (*a*) and (*b*) of section 31 of the Cattle Trespass Act, 1871 (Act I of 1871), and in modification of orders contained in clauses (*a*) and (*b*) of notification No. 317½T.M., dated the 16th August 1913, and in clauses (*a*) and (*b*) of notification No. 1428L.S.-G., dated the 18th May 1914, the Government of Bengal (Ministry of Local Self-Government), are pleased to—

(*a*) transfer to the union board, named below, in the district of Bakarganj, all the functions of the Magistrate of that district, under Chapters II and III of the said Act I of 1871, in respect of all pounds within the local area subject to the jurisdiction of the said union board, and

(*b*) direct that the whole of the surplus accruing under section 18 of the said Act I of 1871, in the area within the jurisdiction of the said union board in the district of Bakarganj, named below, shall be placed to the credit of the union fund constituted for the said union board—

Bhola subdivision.

Bhola police-station.

South Bighaldi union board.

Chittagong.—No. 1930M.—8th March 1935.—In exercise of the power conferred by sub-section (*1*) of section 24 of the Bengal Municipal Act, 1932 (Bengal Act XV of 1932), the Government of Bengal (Ministry of Local Self-Government) are pleased to fix Wednesday, the 13th November 1935, as the date for the first general election of the Commissioners of the Chittagong Municipality in the Chittagong Division.

No. 1871L.S.-G.—6th March 1935.—In exercise of the power conferred by clause (*t*) of section 138 read with sub-clauses (*b*), (*c*) and (*c*[1]) of clause sixthly of section 53 of the Bengal Local Self-Government Act of 1885 (Bengal Act III of 1885), the Government of Bengal (Ministry of Local Self-Government) are pleased to make the following amendment in rules 116 to 119 of the Local Self-Government account rules relating to travelling and daily allowances of Chairmen, Vice-Chairmen and members of district and local boards published with notification No. 2158L.S.-G., dated the 5th September 1918, as subsequently amended, namely:—

Amendment.

For rules 116 to 119 the following rules shall be substituted:—

Travelling and daily allowances of Chairmen and Vice-Chairmen of district boards.

116. (*1*) All Chairmen and Vice-Chairmen of district boards, who are not Government officers, are entitled to draw from the District Fund travelling allowance at the same rates as are admissible to Government officers of the first class for all journeys performed for attending meetings of the district boards or any committee or sub-committee thereof or for performing journeys for carrying out the objects of the Bengal Local Self-Government Act of 1885, hereinafter referred to as the Act. They are entitled to mileage by the shortest route only for journey by road or boat, but are not entitled to any allowance for journeys to places within a radius of five miles from the place whence the journey commenced. For journeys made within the district they shall be entitled to travelling allowance from the place at which the journey is actually commenced, and, for journeys made from any place outside the district, to travelling allowance only for the portion of the journey which is performed within the district:

Provided that the travelling allowance shall, in no case, exceed what would be admissible had the journey been made from the Chairman and Vice-Chairman's usual place of residence within the district:

Provided further that for attending meetings of the district board or local board or for attending meetings of committees or sub-committees thereof, held on two or more consecutive days, Chairman and Vice-Chairman shall be entitled to mileage only for one journey to the place of meeting and back and to daily allowance for a period not exceeding two days.

Note.—(*i*) Travelling allowance under the above rule is not admissible for journeys for attending district headquarters for the discharge of ordinary office work. For every such journey to and fro from his usual place of residence, when no other kind of travelling allowance has been drawn, a district board may allow the Chairman or the Vice-Chairman to draw a consolidated allowance at a rate to be fixed with the approval of Government in each case.

(*ii*) Under this rule for a journey by road or boat an amount equivalent to the daily allowance may be drawn for the first 20 miles and mileage allowance for the excess over 20 miles of any journey, provided that only half mileage may be drawn for any excess over 30 miles.

(*iii*) "Usual place of residence" means the place where the Chairman and Vice-Chairman ordinarily reside for the greater part of the year and which is declared as such in each case by the Commissioner of the Division.

(*2*) No Chairman and Vice-Chairman shall charge mileage allowance and daily allowance for the same day.

(*3*) Chairman and Vice-Chairman are entitled to daily allowance when on tours of inspection: Provided that no daily allowance may

be drawn for halts made in the thana in which they have their residence or residential qualifications by virtue of which they were eligible for election to the district board.

(*4*) Chairman and Vice-Chairman shall not be entitled to travelling allowance for journeys on deputation to see the Hon'ble Minister or for similar purpose except when made on the invitation of Government to send representatives to the Minister.

(*5*) Chairman and Vice-Chairman shall not be entitled to draw travelling allowance from the District Fund for attending a conference of members of local bodies convened by private arrangement unless such a journey is supported by a resolution of the board and is undertaken with the previous consent of the Divisional Commissioner.

(*6*) Chairmen and Vice-Chairmen of district boards, who are Government officers, are entitled to draw from provincial revenues the travelling allowance admissible to them as Government officers for journeys performed for the purposes of the Act.

(*7*) All bills for travelling allowance under these rules should contain a certificate to the effect that for the journey or period to which the claim relates, no similar allowances have been or will be drawn from Government or from any local board or from any other local fund.

Travelling and daily allowances of Chairmen and Vice-Chairmen of local boards.

117. (*1*) Chairmen and Vice-Chairmen of local boards, who are not Government officers, are entitled to draw from the District Fund travelling allowance at the same rates as are admissible to Government officers of the second class for journeys performed for attending meetings of the local boards or any committee or sub-committee thereof and for carrying out the objects of the Act. They are entitled to mileage by the shortest route only for journey by road or boat, but are not entitled to any allowance for journeys to places within a radius of five miles from the place whence the journey commenced. For journeys made within the subdivision they shall be entitled to travelling allowance from the place at which the journey is actually commenced, and, when the journeys are made from any place outside the subdivision, to travelling allowance only for the portion of the journey which is performed within the subdivision:

Provided that the travelling allowance shall, in no case, exceed what would be admissible had the journey been made from the Chairman and Vice-Chairman's usual place of residence within the subdivision:

Provided further that for attending meetings of the district board or a local board or for attending meetings of committees or sub-committees thereof, held on two or more consecutive days, Chairman and Vice-Chairman shall be entitled to mileage only for one journey to the place of meeting and back and to daily allowance at the maximum rate allowable to Government officers of the second class, for a period not exceeding two days.

Note.—(*i*) Travelling allowance under this rule is not admissible for journeys for attending subdivisional headquarters for the discharge of ordinary office work. For every such journey to and fro from the usual place of residence when no other kind of travelling allowance has been drawn, a local board may allow the Chairman or the Vice-Chairman to draw a consolidated allowance at a rate to be fixed with the approval of Government in each case.

(*ii*) Under this rule for a journey by road or boat an amount equivalent to the daily allowance may be drawn for the first 20 miles and mileage allowance for the excess over 20 miles of any journey provided that only half mileage may be drawn for any excess over 30 miles.

(*iii*) "Usual place of residence" means the place where the Chairman and Vice-Chairman ordinarily reside for the greater part of the year and which is declared as such in each case by the Commissioner of the Division.

(*2*) No Chairman and Vice-Chairman shall charge mileage allowance and daily allowance for the same day.

(*3*) Chairman and Vice-Chairman are entitled to daily allowance when on tours of inspection: Provided that no daily allowance may be drawn for halts made in the thana in which they have their residence or residential qualifications by virtue of which they were eligible for election to the local board.

(*4*) Chairman and Vice-Chairman shall not be entitled to travelling allowance for journeys on deputation to see the Hon'ble Minister or for similar purpose except when made on the invitation of Government to send representatives to the Minister.

(*5*) Chairman and Vice-Chairman shall not be entitled to draw travelling allowance from the District Fund for attending a conference of members of local bodies convened by private arrangement unless such a journey is supported by a resolution of the board and is undertaken with the previous consent of the Divisional Commissioner.

(*6*) Chairmen and Vice-Chairmen of local boards, who are Government officers, are entitled to draw from provincial revenues the travelling allowance admissible to them as Government officers for journeys performed for the purposes of the Act.

(*7*) All bills for travelling allowance under these rules shall contain a certificate to the effect that for the journey or period to which the claim relates no similar allowances have been or will be drawn from Government or the district board or any other local fund.

Travelling and daily allowances of members of district boards.

118. (*1*) Members of district boards are entitled to charge travelling allowance under this rule for journeys performed for carrying out the objects of the Act, only when such journeys are performed for attending meetings of district boards or of committees or sub-committees thereof or when such journeys are undertaken in pursuance of a resolution of a district board at a meeting or at the request of the Chairman in writing.

(*2*) Members of district boards, who are not Government officers, shall be entitled to draw from the District Fund travelling allowance at the same rates as are admissible to Government officers of the second class. They are entitled to mileage by the shortest route only for journey by road or boat, but are not entitled to any allowance for journeys to places within a radius of five miles from the place whence the journey commenced. For journeys performed for attending meetings of district boards or of committees or sub-committees thereof such members shall, when the journey is made within the district, be entitled to travelling allowance from the place at which the journey is actually commenced, and, when the journey is made from any place outside the district, to travelling allowance only for the portion of the journey which is performed within the district:

Provided that the travelling allowance shall, in no case, exceed what would be admissible had the journey been made from the members' usual place of residence within the district:

Provided further that for attending meetings of the district board or local board or for attending meetings of committees or sub-committees thereof, held on two or more consecutive days, members shall be entitled to mileage only for one journey to the place of

meeting and back, and to daily allowance at the maximum rate allowable to Government officers of the second class for a period not exceeding two days.

Note.—(*i*) Under this rule for a journey by road or boat an amount equivalent to the daily allowance may be drawn for the first 20 miles and mileage allowance for the excess over 20 miles of any journey, provided that only half mileage may be drawn for any excess over 30 miles.

(*ii*) "Usual place of residence" means the place where a member ordinarily resides for the greater part of the year and which is declared as such in each case by the Commissioner of the Division.

(*3*) Members of district boards are entitled to daily allowance at the maximum rate admissible to Government officers of the second class for halts on tour when the journey is made in pursuance of a resolution of the district board or at the request of the Chairman in writing.

(*4*) No member shall charge mileage allowance and daily allowance for the same day.

(*5*) Members of district boards shall not be entitled to charge travelling allowance for journeys on deputation to see the Hon'ble Minister or for similar purpose except when made on the invitation of Government to send representatives to the Minister.

(*6*) Members of district boards shall not be entitled to draw travelling allowance from the District Fund for attending a conference of members of local bodies convened by private arrangement unless such a journey is supported by a resolution of the board and is undertaken with the previous consent of the Divisional Commissioner.

(*7*) Members of districts boards, who are elected and who are Government officers, shall be entitled to draw from the District Fund the travelling allowance admissible to non-official members.

(*8*) Members of district boards, who are appointed and who are Government officers, shall be entitled to draw from provincial revenues the travelling allowance admissible to them as Government officers.

Note.—The term "Government officers" includes "managers of estates under the Court of Wards who are appointed by Government but paid from the estates and whose service counts for pension under the rules of the Civil Service Regulations."

(*9*) All bills for travelling allowance under these rules shall contain a certificate to the effect that for the journey or period to which the claim relates no similar allowances have been or will be drawn from Government or any local board or any other local fund.

Travelling and daily allowances of members of local boards.

119. (*1*) Members of local boards are entitled to charge travelling allowance under this rule for journeys performed for carrying out the objects of the Act, only when such journeys are performed for attending meetings of, local boards or of committees or sub-committees thereof or when such journeys are undertaken in pursuance of a resolution of a local board at a meeting or at the request of the Chairman in writing.

(*2*) Members of local boards, who are not Government officers, shall be entitled to draw from the District Fund travelling allowance at the same rates as are admissible to Government officers of the second class.

They are entitled to mileage by the shortest route only for journey by road or boat, but are not entitled to any allowance for journeys to places within a radius of five miles from the place whence the journey commenced. For journeys performed for attending meetings of local boards or of committees or sub-committees thereof such members shall, when the journey is made within the subdivision, be entitled to travelling allowance from the place at which the journey is actually commenced, and, when the journey is made from any place outside the subdivision, to travelling allowance only for the portion of the journey which is performed within the subdivision:

Provided that the travelling allowance shall, in no case, exceed what would be admissible had the journey been made from the members' place of residence within the subdivision in which the qualification of election arose or borders of the subdivision on way from the place of business, whichever journey constitutes the smaller charge:

Provided further that for attending meetings of the district board or local board or for attending meetings of committees or sub-committees thereof, held on two or more consecutive days, members shall be entitled to mileage only for one journey to the place of meeting and back, and to daily allowance at the maximum rate allowable to Government officers of the second class for a period not exceeding two days.

Note.—(*i*) Under the above rule for a journey by road or boat an amount equivalent to the daily allowance may be drawn for the first 20 miles and mileage allowance for the excess over 20 miles of any journey, provided that only half mileage may be drawn for any excess over 30 miles.

(*3*) Members of district boards are entitled to daily allowance at the maximum rate admissible to Government officers of the second class for halts on tours when the journey is made in pursuance of a resolution of the local board or at the request of the Chairman in writing.

(*4*) No member shall charge mileage allowance and daily allowance for the same day.

(*5*) Members of local boards shall not be entitled to charge travelling allowance for journeys on deputation to see the Hon'ble Minister or for similar purpose except when made on the invitation of Government to send representatives to the Minister.

(*6*) Members of local boards shall not be entitled to draw travelling allowance from the District Fund for attending a conference of members of local bodies convened by private arrangement unless such a journey is authorised by a resolution of the board and is undertaken with the previous consent of the Divisional Commissioner.

(*7*) Members of local boards, who are elected and who are Government officers, are entitled to draw from the District Fund the travelling allowance admissible to non-official members.

(*8*) Members of local boards, who are appointed and who are Government officers, shall be entitled to draw from provincial revenues the travelling allowance admissible to them as Government officers.

Note.—The term "Government officers" includes "managers of estates under the Court of Wards who are appointed by Government but paid from the estates and whose service counts for pension under the rules of the Civil Service Regulations."

(*9*) All bills for travelling allowance under these rules shall contain a certificate to the effect that for the journey or period to which the claim relates no similar allowances have been or will be drawn from Government or from the district board or any other local fund.

G. S. DUTT,

Secy. to the Govt. of Bengal.

No. 1847M.—6th March 1935.—In exercise of the power conferred by clause (n^1) of section 138 of the Bengal Local Self-Government Act, 1885 (Bengal Act III of 1885), the Government of Bengal (Ministry of Local Self-Government) are pleased to make the following rules:—

Rules regarding the duties of the Public Health Committee of District Boards, Bengal.

1. *Duties under sections 90, 90A, 90B and 91A.*—It shall be the duty of a Public Health Committee of a District Board to perform such of the duties of the District Board under sections 90, 90A, 90B and 91A in connection with matters, relating to public health as may be entrusted to the Public Health Committee by the district board.

2. *Sanitary works.*—It shall be the duty of the Public Health Committee, subject to the control of the district board, to initiate and supervise works connected with the sanitation of the district.

3. *Sanitary improvement schemes.*—All schemes for rural sanitary improvement shall before adoption by the district board be considered by the Public Health Committee.

4. *Water-supply.*—The Public Health Committee may, where necessary, obtain from the Sanitary Inspectors, through the District Health Officer, a report of the need for water-supply of the area under their charge, showing endemic cholera villages, *i.e.*, villages repeatedly visited by cholera, with other villages where the incidence rate and the death-rate from water-borne diseases are high and also villages actually suffering from want of supply of wholesome water. On examination of the report, the Committee may decide on the necessity of sinking wells and excavating tanks and select sites in consultation with the District Health Officer and the District Engineer and forward their recommendations to the district board for consideration and execution.

5. When required by the district board, the Public Health Committee may construct, repair and maintain water-works, wells or tanks at suitable places and take such action as may be considered necessary under sub-sections (*1*) and (*3*) of section 90.

6. *Prohibition of use of unwholesome water.*—The Public Health Committee may recommend prohibition of the use of unwholesome water under section 90A.

7. *Private markets.*—When required by the district board, the Public Health Committee shall arrange for the inspection of private markets by competent officers with a view to take necessary steps for the removal of their insanitary condition and for the improvement of their sanitary condition.

8. *Melas and festivals.*—When required by the district board, the Public Health Committee shall in collaboration with the presidents of union boards provide for proper conservancy and other sanitary arrangements at the melas or places used for fairs and festivals.

9. *Administration of the Bengal Food Adulteration Act.*—When required by the district board, the Public Health Committee shall take all possible measures under the Bengal Food Adulteration Act, 1919 (Ben. Act VI of 1919), to prevent the sale of adulterated food stuff in rural areas, and shall report to the district board any such offences as may be detected.

10. *Prohibiting of sale of food stuff by leper, etc.*—When required by the district board, the Public Health Committee may take such steps as they may consider necessary to prevent the sale of articles of food or drink unfit for human consumption or the sale by a leper or by any person suffering from an infectious or contagious disease of any article of food or drink which is intended for human consumption.

11. *Leprosy.*—The Public Health Committee may cause a census of leprosy cases in the district or in any selected area to be taken and may, when required by the district board, cause treatment centres to be started at convenient places.

12. *Kala-azar.*—The Public Health Committee may cause a survey of kala-azar infection in the district or in a selected area to be

taken and may, when required by the district board, arrange for treatment of kala-azar patients at convenient places.

13. *Malaria.*—When required by the district board, the Public Health Committee shall arrange to have a thorough survey of the district made, so far as malaria is concerned, and shall undertake such anti-malarial measures as the district board is authorised to take under section 90B.

14. When required by the district board, the Public Health Committee may depute competent officers to supervise any anti-malarial work undertaken by union boards with grants made by the district board for the purpose.

15. *Epidemic outbreaks.*—Whenever any infectious or contagious disease breaks out in an epidemic form in any district, the Public Health Committee shall, with the approval of the district board and with the help of the District Health Officer, the local public and the health staff of the rural public health organisation, take such steps as may be deemed necessary to effect speedy control and suppression of the outbreak.

16. *Early notification of epidemic outbreaks and reward.*—When required by the district board, the Public Health Committee may make payment, from such fund as may be placed at their disposal, by way of reward to persons furnishing early notification of the outbreak of any infectious or contagious disease in any village in the district.

17. *Isolation arrangement.*—The Public Health Committee shall advise the district board on the construction of segregation wards in connection with dispensaries at suitable places for the isolation and treatment of persons suffering from any infectious or contagious disease.

18. *Plague.*—In the event of an outbreak of plague, the Public Health Committee shall arrange for immediate inspection of the cases and the locality by a qualified medical man or by the District Health Officer and shall communicate forthwith, through the district board, the result of inquiry by the said officer to the District Magistrate, the Director of Public Health, Bengal, and also to the Local Government, if necessary by wire, and shall, subject to the sanction of the district board, take such steps as they may consider necessary for stamping out the disease.

19. *Destruction of noxious animals.*—The Public Health Committee may arrange for the destruction of noxious animals and other animals suffering from or suspected to be suffering from rabies.

20. *Anti-rabic treatment.*—The Public Health Committee may, on the receipt of a certificate from the Civil Surgeon or the District Health Officer, arrange for the proper treatment of indigent persons bitten by rabid animals or by animals suspected to be suffering from rabies.

21. *Epizootics communicable to human beings.*—The Public Health Committee may arrange for notification of any epizootics communicable to man to the District Health Officer and to the Sanitary Inspectors and may adopt such measures as may be directed by the district board to prevent the spread of the infection to human beings.

22. *Epidemic Diseases Act and regulations made thereunder.*—Whenever it is considered that emergent regulations under the Epidemic Diseases Act, 1897 (III of 1897), should be enforced for the control and suppression of any dangerous epidemic disease within the district, the Public Health Committee shall forthwith make a report to the Director of Public Health, Bengal, through the district board, stating the necessity for the application of the said regulations. As soon as the Local Government prescribes such regulations, the Public Health Committee shall take such measures as they may be authorised by the district board to take under the said Act or regulations thereunder.

23. *Mass education.*—The Public Health Committee may arrange by educative propaganda with magic lantern, cinema apparatus or any other necessary appliances, for the spread of the knowledge of preventive measures against infectious or contagious diseases among the public.

24. *Snake-bite treatment.*—When required by the district board, the Public Health Committee may arrange for supply of remedies for the treatment of snake-bite to the Sanitary Inspectors of thana public health circles, to the medical officers of district board dispensaries, union board dispensaries and to other benevolent organisations. The Committee shall notify the places wherefrom the remedies are available and may fix a price for the remedies to cover the actual cost of purchase thereof.

25. *Disposal of corpses abandoned during epidemics.*—When required by the district board, the Public Health Committee shall arrange for the proper disposal by burning or burial of corpses abandoned during epidemics or unearthed by animals, where the persons are believed to have died of an infectious or contagious disease. For the said purpose it shall be lawful for the Public Health Committee to maintain such staff or to incur such expenditure as the district board may sanction.

26. *Establishment of public burial ground and places for cremation.*—When required by the district board, the Public Health Committee may make necessary arrangements with union boards for the establishment of public burial grounds and places for the cremation of the dead.

27. *Disposal of dead bodies of paupers.*—When required by the district board, the Public Health Committee may arrange with the union boards for the disposal of dead bodies of paupers free of cost.

28. *Prevention of pollution of water.*—When required by the district board, the Public Health Committee may with the assistance of the union boards take steps to prevent the pollution of water of streams, rivers, and water courses within the district by the throwing of corpses and carcasses into them.

29. *Drainage, conservancies and other sanitary improvement.*—When required by the district board, the Public Health Committee may issue from time to time instructions to the union boards for the improvement of drainage, conservancy and the general sanitary condition of the whole or part of any union as the case may be.

H. R. WILKINSON,
Secy. to the Govt. of Bengal.

Medical.

Minister-in-charge: The Hon'ble Sir Bijoy Prasad Singh Roy, Kt.

Khulna.—No. 981Medl.—4th March 1935.—Dr. Radha Raman Ghosh, Civil Surgeon, Khulna, is granted leave on average pay for four months, under rule 81(*b*) (*ii*) of the Fundamental Rules, with effect from the 5th March 1935, or from the date of relief.

Chittagong Hill Tracts-Khulna.—No. 982-Medl.—4th March 1935.—Dr. Narendra Nath Ghosh, officiating Civil Surgeon, Chittagong Hill Tracts, on the expiry of his leave, is appointed to act as Civil Surgeon, Khulna, *vice* Dr. Radha Raman Ghosh.

2. Notification No. 345Medl., dated the 31st January 1935, reappointing Dr. Narendra Nath Ghosh as officiating Civil Surgeon, Chittagong Hill Tracts, is hereby cancelled.

Calcutta.—No. 1000Medl.—5th March 1935.—Lt-Col. R. Knowles, I.M.S., Professor of Protozoology and officiating Director, School of Tropical Medicine, Calcutta, was allowed leave on average pay, under rules 81 (*b*) (*i*) and 82 (*b*) of the Fundamental Rules, for the period from the 9th January to the 7th February 1935.

Calcutta.—No. 1001Medl.—5th March 1935.—Lt-Col. R. N. Chopra, C.I.E., I.M.S., Professor of Pharmacology, School of Tropical Medicine, Calcutta, is appointed to act as Director of the School in addition to his own duties, with effect from the 9th January 1935 until further orders.

Calcutta.—No. 1002Medl.—5th March 1935.—Dr. P. A. Maplestone, Research Worker, Hookworm Department, School of Tropical Medicine, Calcutta, was appointed to act as Professor of Protozoology in that institution in addition to his own duties, during the absence, on leave, of Lt.-Col. R. Knowles, I.M.S.

24-Parganas.—No. 1060Medl.—11th March 1935.—Lt.-Col. K. S. Thakur, I.M.S., Civil Surgeon, 24-Parganas, is granted leave *ex*-India for seven months, with effect from the 23rd April 1935 or from the date of relief, viz., leave on average pay for six months and six days, under the proviso to Fundamental Rule 81(*b*)(*ii*) and leave on half average pay for the remaining period, under Fundamental Rule 81(*d*).

Chittagong.—No. 1061Medl.—11th March 1935.—Lt.-Col. P. Banerji, I.M.S., Civil Surgeon, Chittagong, on relief, is appointed to act, until further orders, as Civil Surgeon, 24-Parganas, *vice* Lt.-Col. K. S. Thakur, I.M.S.

Chittagong.—No. 1062Medl.—11th March 1935.—Captain G. B. W. Fisher, I.M.S., on the expiry of his leave, is appointed to act, until further orders, as Civil Surgeon, Chittagong, *vice* Lt.-Col. P. Banerji, I.M.S.

Calcutta.—No. 1065Medl.—11th March 1935.—Lt.-Col. T. C. Boyd, F.R.C.S.I., I.M.S., Principal, Medical College, and Superintendent of the Medical College Hospitals, Calcutta, is granted leave for the period from the 14th March 1935, or from the date of relief to the 14th October 1935, viz., leave on average pay for five months and twenty-one days and on half average pay for the remaining period, under rules 81 (*b*) (*i*) and 81 (*d*) of the Fundamental Rules, respectively.

Burdwan-Calcutta.—No. 1066Medl.—11th March 1935.—Lt.-Col. B. H. Singh, M.C., I.M.S., Civil Surgeon of Burdwan, is appointed to act, until further orders, as Principal, Medical College, and Superintendent of the Medical College Hospitals, Calcutta, *vice* Lt.-Col. T. C. Boyd, I.M.S.

G. S. DUTT,
Secy. to the Govt. of Bengal.

Public Health.

NOTIFICATIONS.

Minister-in-charge: The Hon'ble Sir Bijoy Prasad Singh Roy, Kt.

Khulna.—No. 592P.H.—6th March 1935.—The following draft of rules, which the Government of Bengal (Ministry of Public Health) propose to make, in exercise of the power conferred by clause (*i*) of section 311 of the Bengal Municipal Act, 1932 (Bengal Act XV of 1932), for the prevention of injury or contamination to the source of water-supply of the Khulna Municipality, is published for the information of persons likely to be affected thereby.

The draft will be taken into consideration on or after the 1st June 1935, and any objection or suggestion with respect thereto which may be received by the undersigned before that date will be duly considered:—

Draft rules.

1. No person shall anchor any boat or commit any nuisance or throw sewage within one hundred feet on either side of the intake pipe of the water-works of the Khulna Municipality.

2. A breach of the provisions of rule 1 shall be punishable with fine which may extend to fifty rupees.

24-Parganas.—No. 654P.H.—9th March 1935.—In exercise of the power conferred by section 311 of the Bengal Municipal Act, 1932 (Bengal Act XV of 1932), the Government of Bengal (Ministry of Public Health) are pleased to make the following rules for the regulation of the supply of filtered water to private premises in the Dum-Dum Municipality in the district of the 24-Parganas for domestic purposes only:—

Rules regulating the supply of filtered water to private premises for domestic purposes in the Dum-Dum Municipality.

So long as the Commissioners deem it practicable and consistent with the maintenance of an efficient water-supply, they may allow any owner or occupier of a holding, within the municipality, paying a water-rate imposed under the provisions of Chapter V of the Bengal Municipal Act, 1932, on the annual value of such holding, when such annual value is not less than Rs. 240, to lay down communication-pipes from the service pipes of the Commissioners for the purpose of leading water to such holding for domestic purposes only, subject to the following rules and conditions:—

1. The owner or occupier of any holding requiring water to be laid on to such holding for domestic purposes or requiring any addition or alteration to an existing water-supply must apply for the same on a printed form, to be supplied free of cost, at the Dum-Dum Municipal Office and shall deposit with the application the sum of Rs. 5, which will be returned to him if within six months of the date of application he has paid the fee of Rs. 50 prescribed in rule 2 and which otherwise will be forfeited to the Commissioners.

2. A fee of Rs. 50 must be paid to the Commissioners by such owner or occupier for each connection to a municipal main supply pipe or a common communication-pipe laid in accordance with rule 3 before any work is commenced, such fee to be in addition to all other costs and charges imposed under these rules.

3. Except as provided below each holding must have a separate connection to the municipal main supply pipe and extensions from the communication-pipe of one holding to another holding shall not be permitted:

Provided that with the consent of the Commissioners in meeting connections to two or more holdings may be permitted from a common communication-pipe. Any such communication-pipe must be laid in a street or common passage, and a stop-cock and meter as provided for in rule 7 must be fixed on the connection to each holding:

Provided also that no holding shall have more than one separate connection, but if in any case the Commisisoners are satisfied that an adequate supply to any holding cannot be given through a single connection, they may sanction a second connection thereto.

4. The owner or occupier of the holding in respect of which the connection is required must pay the entire cost of the connection including the supply and fixing of the fittings referred to in rule 7 and must also pay the costs of such alterations in or repairs to roads, drains, sewers, gas or water mains or pipes and the cost of such other works as may be necessitated by or result from the work of making such connection.

5. The owner or occupier of the holding to which a connection has been given must, at any time, on receipt of notice to do so from the Commissioners, pay the entire costs of

any repairs or alterations to the connection or any part thereof that the Commissioners may consider necessary to put it into satisfactory condition or which may be necessitated by any change in municipal water-works or system of distribution or by the defective condition of the connection or any part thereof or by any other cause whatever.

6. (*1*) The works required under rules 4 and 5 may, at the option of the Commissioners, either be carried out by the Commissioners themselves at the expense of the owner or occupier of the holding in respect of which the works are required or may be carried out by a person or firm employed by such owner or occupier and approved by the Commissioners.

(*2*) No work shall be carried out under sub-rule (*1*) except under the supervision of a municipal officer.

7. A holding connection shall comprise the following parts or fittings:—

(*a*) A brass or gun-metal ferrule inserted in the main supply pipe;

(*b*) A galvanized iron communication-pipe from the ferrule to the meter;

(*c*) A stop-cock and its surface-box;

(*d*) A meter with the masonry-box complete with locking arrangement;

(*e*) Service pipe from the stop-cock to the taps; and

(*f*) Taps.

8. (*1*) All the fittings referred to in rule 7 shall be exact duplicate of standard samples kept in the office of the Commissioners and approved by them in meeting.

(*2*) All fittings shall be inspected and tested and stamped by an officer of the municipality before being fixed.

(*3*) If any owner or occupier shall desire to adopt any fitting of a pattern different from the standard patterns, he must present such fittings for the approval of the Chairman, and any fitting so presented may, if considered satisfactory by the Chairman, be stamped and samples thereof may be purchased and placed among the standard fittings.

9. The holding connection when fitted in position must be capable of standing a pressure of 150 feet and no water shall be supplied until it has stood such a test applied by the Commissioners.

10. The size of the ferrule and the diameter of the communication-pipe referred to in clauses (*a*) and (*b*) of rule 7 and the number of taps shall be fixed in accordance with the annual valuation of the holding as follows:—

Annual value of holdings.			Sizes of ferrules.	Diameter of communication-pipe.	No. of taps.
Rs.		Rs.	Inch.	Inch.	
From 240	to	399	¾	¾	1
,, 400	to	599	¾	¾	2
,, 600	to	899	¾	¾	3
,, 900	to	1,199	¾	¾	4
,, 1,200	to	1,499	¾	1	5
,, 1,500	to	1,999	1	1	6

From Rs. 2,000 and over an extra tap for every additional Rs. 1,000 and when the Commissioners are satisfied that it is necessary for the proper supply of such extra taps a corresponding increase in the size of ferrule or tee piece on the municipal main and in the diameter of communication-pipe.

11. (*1*) On every communication-pipe a brass or gun-metal stop-cock having the same waterway as such pipe shall be placed as near as practicable to the point where that pipe enters the holding to be supplied.

(*2*) The stop-cock shall be built in a brick chamber provided with a cast-iron surface cover box so designed that it can be locked, and the key of this box shall remain under the control of the Chairman.

(*3*) Stop-cock shall be capable of adjustment so that the supply to the holding may be regulated thereby.

12. (*1*) The meter shall be placed as near to the stop-cock as possible and in a position where it can be conveniently examined.

(*2*) The meter must be fixed in a brick chamber covered with a cast-iron surface-box of approved pattern.

13. Neither the stop-cock nor the meter must be placed in any private premises.

14. The Commissioners shall depute an authorised person to read every meter not less than once a quarter and shall give notice to the occupier at least 24 hours before the reading is taken.

15. In the event of the meter ceasing to register, the quantity of water consumed during the period the meter had ceased to register shall be calculated on the basis of the average consumption of water of the holding for the period of the last four quarters during which it was occupied.

16. (*a*) Every owner or occupier of any holding, in respect of which a connection has been made under these rules, shall be entitled for each quarter to a supply of 1,350 gallons of water per quarter for each rupee paid by him for the premises in water-tax,

(*b*) for all water in excess of the amount allowed under clause (*a*), such owner or occupier shall be charged at the rate of Rs. 1-4 per 1,000 gallons.

17. The Commissioners may cut off the connection between any water-works of the municipality and any holding to which water is supplied from such works or may turn off such supply in any of the following cases, namely:—

(*a*) if the holding is unoccupied;

(*b*) if the occupier refuses to admit any officer, duly empowered in that behalf, into the holding for the purpose of making any examination or inspection authorised under the Bengal Municipal Act or under any bye-law or rule framed under this Act, or prevent such officer from making such examination or inspection;

(*c*) if the owner or occupier of the holding touches or interferes with the meter of his holding in any way except with the permission of the Chairman or wilfully or negligently injures or damages it;

(*d*) if the owner or occupier of the holding wilfully or negligently permits waste of water in such volume as will in the opinion of the Chairman endanger the water-supply in the neighbourhood;

(*e*) if the owner or occupier of the holding shall refuse or neglect to pay any of the fees or charges imposed in accordance with these rules for a space of fourteen days after he has been served with a notice of demand for the same;

(*f*) if the owner or occupier of the holding constructs or fixes in connection with the water-supply any cistern, tank, reservoir, tap, pipe or any other work not authorised by these rules;

(*g*) if the pipe, tap, ball-cock, cistern, or any other part of the connection is in the opinion of the Commissioners in a leaking condition or in a state of disrepair:

Provided that such disconnection or turning off of water-supply shall not relieve any person from any liabilities which he may have incurred under these rules.

In the circumstances contemplated in clause (*d*) an officer authorised by the Commissioners in this behalf, by a general order, shall have the power to turn off the supply for a period not exceeding eight hours on his previously recording the reasons in writing.

18. Every tap shall be at least 3 feet above the surface of the ground beneath.

19. No cistern, tank or reservoir of any description which is intended to be supplied with water from the municipal water-works shall be permitted to any holding except with the sanction of the Commissioners in meeting and such sanction shall distinctly specify the dimensions and capacity of the cistern, tank or reservoir allowed. The inlet to every such cistern, tank or reservoir must be controlled by an efficient ball-cock, so that the discharge thereinto is completely stopped when the cistern, tank or reservoir is full. The ball-cock, cistern and taps attached thereto shall together count as one tap for the purpose of rule 10.

20. No connection shall be permitted to any holding unless and until the owner or occupier makes effective provision to the satisfaction of the Commissioners concerned for draining all waste water away.

21. Rule 1 (so far as it relates to addition and alteration to an existing water-supply) and rules 14, 15, 16, 17 and 19 shall apply to the connections given before the issue of these rules.

H. R. WILKINSON,
Secy. to the Govt. of Bengal.

EDUCATION DEPARTMENT.

NOTIFICATIONS.

No. 999Edn.—11th March 1935.—In exercise of the power conferred by section 6, subsection (*1*), clause (*c*), and section 10 of the Indian Universities Act, 1904 (VIII of 1904), as amended by the Calcutta University Act, 1921 (VII of 1921), His Excellency the Chancellor of the Calcutta University is pleased to nominate Dr. T. Ahmed, M.B., D.O.M.S., F.R.C.S., to be an Ordinary Fellow of the University.

No. 1002Edn.—11th March 1935.—In exercise of the power conferred by section 6, subsection (*1*), clause (*c*), and section 10 of the Indian Universities Act, 1904 (VIII of 1904), as amended by the Calcutta University Act, 1921 (VII of 1921), His Excellency the Chancellor of the Calcutta University is pleased to nominate Professor Shahid Suhrawardy, B.A. (Oxon.), to be an Ordinary Fellow of the University.

Minister-in-charge: The Hon'ble Khan Bahadur M. Azizul Haque.

Calcutta.—No. 974Edn.—11th March 1935.—The Government of Bengal (Ministry of Education) are pleased to appoint the following persons to constitute the Governing Body of the English (Arts) Department of the Sanskrit College, Calcutta:—

(1) Dr. Sir Deba Prasad Sarbadhikary, KT., C.I.E., C.B.E., M.A., LL.D., President.

(2) The Principal, Sanskrit College, Vice-President and Secretary (*ex-officio*).

(3) Mr. W. C. Wordsworth, M.A.

(4) Dr. Probhat Chandra Chakravarty, M.A., PH.D., Ashutosh Professor of Sanskrit, Calcutta University.

(5) Professor Akshoy Kumar Sarkar, M.A., Retired Professor, Presidency College.

(6) Pandit Banamali Vedantatirtha, M.A.

(7) Pandit Bimalananda Tarkatirtha.

(8) and (9) Two elected representatives of the teaching staff approved by the Director of Public Instruction, Bengal.

2. Members other than the representatives of the staff will hold office for three academic sessions from 1935-36, whereas the two elected representatives of the staff will hold office for one academic session, viz., 1935-36.

Hooghly.—No. 901Edn.—5th March 1935.—The Government of Bengal (Ministry of Education) are pleased to appoint the following persons to constitute the Governing Body of the Hooghly College:—

(1) The Commissioner of the Burdwan Division, President (*ex-officio*).

(2) The Principal, Hooghly College, Vice-President and Secretary (*ex-officio*).

(3) Babu Rajendra Lal Sadhu, M.A., B.L.

(4) Dr. S. A. H. Jafri, PH.D., Mutwalli, Hooghly Imambara.

(5) Babu Prasad Das Mallick, B.L.

(6) and (7) Two elected representatives of the teaching staff of the college, one a Moslem and the other a Hindu, approved by the Director of Public Instruction, Bengal.

2. The elected representatives of the teaching staff will hold office for the academic session 1935-36, and the rest for three academic sessions from 1935-36.

Chittagong. — No. 912Edn. — 7th March 1935.—Maulvi Abdul Latif, officiating Subdivisional Inspector of Schools, Chittagong, is appointed to act as District Inspector of Schools, Chittagong, with effect from the 12th January 1935, pending the arrival of Babu Dwijendra Nath Dutta Chaudhuri, or until further orders.

Calcutta-Chittagong.—No. 967Edn. — 11th March 1935.—Babu Sudhansu Kumar Guha-Thakurta, Professor of Economics, Islamia College, Calcutta, is appointed as Professor of that subject, Chittagong College, with effect from the date on which he joins the appointment, *vice* Babu Akshay Kumar Sarkar, retired.

Hooghly-Calcutta. — No. 968Edn.—11th March 1935.—Maulvi Abdus Sadeque, Professor of Economics, now posted at the Hooghly College, is appointed as Professor of that subject, Islamia College, Calcutta, with effect from the date on which he joins the appointment, *vice* Babu Sudhansu Kumar Guha-Thakurta, transferred.

Chittagong.—No. 971Edn. — 11th March 1935.—Babu Mahima Ranjan Barua, Professor of Pali, Chittagong College, is appointed to act as Vice-Principal of the College, in addition to his own duties and on his own pay in the Bengal Educational Service, with effect from 2nd January 1935, during the absence, on leave, of Babu Bhabesh Chandra Banerji, or until further orders.

Registration.

NOTIFICATIONS.

Minister-in-charge: The Hon'ble Khan Bahadur M. Azizul Haque.

Rangpur.—No. 222Regn. — 11th March 1935.—In exercise of the power conferred by section 3 of the Bengal Muhammadan Marriages and Divorces Registration Act, 1876 (Bengal Act I of 1876), the Government of Bengal (Ministry of Education) are pleased to appoint Maulvi Muhammad Abdur Rahman temporarily to be a Muhammadan Registrar within the police-stations of Rangpur (Kotwali) and Gangachara, in the district of Rangpur, during the absence, on leave, of Maulvi Muhammad Abdul Ghafur, or until further orders.

Rangpur.—No. 223Regn. — 11th March 1935.—In exercise of the power conferred by section 2 of the Kazis' Act, 1880 (Act XII of 1880), the Government of Bengal (Ministry of Education) are pleased to appoint Maulvi Muhammad Abdur Rahman temporarily to be the Kazi for the celebration of marriages and the performance of other rites and ceremonies within the police-stations of Rangpur (Kotwali) and Gangachara, in the district of Rangpur, during the absence, on leave, of Maulvi Muhammad Abdul Ghafur, or until further orders.

H. R. WILKINSON,
Secy. to the Govt. of Bengal.

Orders by the Director of Public Instruction, Bengal.

Bengal Educational Service.

Rajshahi Divn.—No. 14B.—26th February 1935.—Maulvi Abdul Ghani, officiating Second Inspector of Schools, Rajshahi Division, in the Bengal Educational Service, is granted leave on average pay for three days, with effect from 16th April 1935, under Fundamental Rule 81 (*b*) (*ii*).

2. He is permitted to prefix to his leave the gazetted holidays and Sunday from 13th to 15th April and to suffix to it the Easter holidays from 19th April 1935 to 22nd April 1935, provided the conditions prescribed in Subsidiary Rules 206 to 208 are fulfilled.

Chittagong Divn. — No. 15B. — 28th February 1935.—Babu Bisweswar Dutta, Professor of Philosophy, Chittagong College, in the Bengal Educational Service, is granted, under rules 81 (*b*)·(*ii*) and 82 (*b*) of the Fundamental Rules, leave on average pay for three days, with effect from 16th April 1935.

2. He is permitted to suffix to the leave the summer vacation of the Chittagong College extending from 19th April 1935 to 28th June 1935 (including the Easter holidays from 19th April 1935 to 22nd April 1935). He is also permitted to prefix to his leave the gazetted holidays and Sunday from 13th April 1935 to 15th April 1935, provided the conditions prescribed in Subsidiary Rules 206 to 208 are fulfilled.

J. M. BOTTOMLEY,
Director of Public Instrn., Bengal.

Orders by the Inspector-General of Registration, Bengal.

Mymensingh.—No. 91.—2nd March 1935.—Maulvi Kazi Muhammad Abdur Rauf, Sub-Registrar of Bajitpur, in the district of Mymensingh, is appointed to be Sadar Second Joint Sub-Registrar of Mymensingh.

Mymensingh - Dacca.—No. 92.—2nd March 1935.—Maulvi Saiyid Abul Khair Muhammad Shams-ur-Rahman Al-Jalaly, Sadar Second Joint Sub-Registrar of Mymensingh, is appointed to be Sub-Registrar of Narayanganj, in the district of Dacca.

Hooghly - Khulna. — No. 93.—5th March 1935.—Babu Hemanta Kumar Ghosh, Sub-Registrar of Serampore, in the district of Hooghly, under orders of transfer to Kalaroa, in the district of Khulna, is allowed leave on average pay for one month, under rule 81 (*b*) (*ii*) of the Fundamental Rules, in extension of the leave granted to him in this department notification No. 459, dated the 3rd October 1934.

Dinajpur. — No. 94.—5th March 1935.—Babu Ramesh Chandra Datta, Sub-Registrar of Birganj, in the district of Dinajpur, is appointed to be Sub-Registrar of Parbatipur in the same district.

Dinajpur. — No. 95.—5th March 1935.—Babu Anath Nath Mukharji, Sub-Registrar of Parbatipur, in the district of Dinajpur, is appointed to be Sub-Registrar of Birganj in the same district.

Midnapore.—No. 96.—7th March 1935.—Babu Gopendra Nath Ray, Sub-Registrar of Chandrakona, in the district of Midnapore, is allowed leave on average pay for twenty-one days, under rule 81 (*b*) (*ii*) of the Fundamental Rules, with effect from the 4th February 1935.

Midnapore.—No. 97.—7th March 1935.—Babu Joydev Banarji, Sub-Registrar attached to Midnapore, is appointed to act as Sub-Registrar of Chandrakona in the same district, with effect from the 12th February 1935, during the absence, on leave, of Babu Gopendra Nath Ray, Sub-Registrar, or until further orders.

Bakarganj.—No. 98.—7th March 1935.—Babu Hari Mohan Basu, Sub-Registrar of Bhola, in the district of Bakarganj, is allowed leave on average pay for three days, under rule 81 (*b*) (*ii*) of the Fundamental Rules, with effect from the 16th April 1935.

24-Parganas.—No. 99.—9th March 1935.—Maulvi Muhammad Reazuddin, Joint Sub-Registrar of Kakdip at Ghateswara, in the district of the 24-Parganas, is allowed leave on average pay for thirty days, under rule 81 (*b*) (*ii*) of the Fundamental Rules, with effect from the date on which he may be relieved.

Murshidabad-24-Parganas.—No. 100. — 9th March 1935.—Babu Narmada Ranjan Das Gupta, Sub-Registrar attached to Murshidabad, is appointed to act as Joint Sub-Registrar of Kakdip at Ghateswara, in the district of the 24-Parganas, with effect from the date on which he joins the appointment during the absence, on leave, of Maulvi Muhammad Reazuddin, Sub-Registrar, or until further orders.

Malda.—No. 101.—9th March 1935.—Babu Surendra Nath Ray, Sub-Registrar of Nowabganj, in the district of Malda, is allowed leave on average pay for one month, under rule 81 (*b*) (*ii*) of the Fundamental Rules, with effect from the date on which he may be relieved.

Dinajpur-Malda.—No. 102. — 9th March 1935.—Maulvi Tajuddin Ahmed, Sub-Registrar attached to Dinajpur, is appointed to act as Sub-Registrar of Nowabganj, in the district of Malda, with effect from the date on which he joins the appointment, during the absence, on leave, of the permanent incumbent, or until further orders.

S. AHMED,
Inspector-General of Regn., Bengal.

FINANCE DEPARTMENT.

Finance.

NOTIFICATION.

Calcutta-Darjeeling. — No. 1738F. — 11th March 1935.—In exercise of the powers conferred by rule 44 of the Fundamental Rules and rules 41, 42 and 44 of the Civil Services (Classification, Control and Appeal) Rules, the Governor in Council and acting with his Ministers is pleased to make the following amendments to the Fundamental and Subsidiary Rules, namely:—

Amendments.

In Appendix 7, for the entries relating to Darjeeling district and Calcutta in both the columns the following shall be substituted, namely:—

Localities.	Special rates admissible.
Calcutta (that is, the area within the limits of jurisdiction of the Calcutta Corporation).	Daily allowance at double the ordinary rate subject to a maximum of Rs. 12. *Note.*—Officers whose headquarters are within the limits of jurisdiction of the Calcutta Corporation are not entitled to this concession in Calcutta.
Darjeeling district, except the Siliguri subdivision.	Daily allowance at double the ordinary rate subject to a maximum of Rs. 12, provided that in the case of trips not involving a halt in the area for a night away from headquarters, it will be limited to Rs. 6 or the amount ordinarily admissible, whichever is greater. *Note 1.*—The daily allowance for a halt in Darjeeling town of officers whose headquarters are outside the district shall be one and half times the ordinary rate subject to a maximum of Rs. 9. *Note 2.*—The poddar attached to the Siliguri sub-treasury when accompanying remittance to Darjeeling shall receive Rs. 1-8 as daily allowance.

Audit.

NOTIFICATION.

No. 1585F.—8th March 1935.—In exercise of the powers conferred by rules 41, 42 and 44 of the Civil Services (Classification, Control and Appeal) Rules and with the previous sanction of the Governor-General in Council as required by rule 11 of those rules, the Governor in Council and acting with his Ministers is pleased to direct that the following amendments shall be made in the General Provident Fund (Bengal Services) Rules, namely:—

I. In sub-rule (*1*) of rule 6 of the said Rules, after the word "All," the word "eligible" shall be inserted.

II. In rule 10 of the said Rules, for sub-rule (*2*) the following sub-rule shall be substituted, namely:—

"(*2*) The subscriber shall intimate his election not to subscribe during leave in the following manner:—

(*a*) if he is an officer who draws his own pay bills, by making no deduction on account of subscription in his first pay bill drawn after proceeding on leave;

(*b*) if he is not an officer who draws his own pay bills, by written communication to the head of his office before he proceeds on leave. Failure to make due and timely intimation shall be deemed to constitute an election to subscribe.

The option of a subscriber intimated under this sub-rule shall be final".

III. In sub-rule (*3*) of rule 11 of the said Rules—

(*i*) In clause (*c*) after the word and figure "Rule 6" the words "or joins the Fund for the first time" shall be inserted;

(*ii*) in clause (*d*) the words "by written intimation to the Account Officer" shall be omitted;

(*iii*) in clause (*e*) for the words, figures and letters, "written communication to the Account Officer before the 1st April of the current year" the words "the amount credited by him into the treasury on account of subscription for the month of April in the current year" shall be substituted.

IV. In sub-rule (*5*) of rule 16 of the said Rules, for the words "Government may direct," the words and letter "may be directed by one of the authorities specified in Appendix B to these rules" shall be substituted.

V. In rule 21 of the said Rules—

(*a*) In sub-rule (*3*) for the words "the Local Government may direct," the words and letter "may be directed by one of the authorities specified in Appendix B to these rules" shall be substituted;

(*b*) In Note 2, for the figures "31," the figures "30" shall be substituted.

VI. In clause (*a*) of rule 33 of the said Rules, after the word "shall," the words "with the consent of the other Government concerned" shall be inserted.

D. GLADDING,
Secy. to the Govt. of Bengal.

MARINE DEPARTMENT.

NOTIFICATION.

No. 9Mne.—8th March 1935.—It is hereby notified under the provisions of section 6 of the Calcutta Port Act, 1890, that Mr. Nalini Ranjan Sarkar, of the Hindusthan Co-operative Insurance Society, Limited, and Mr. J. C. Banerjee, of Messrs. J. C. Banerjee, Limited, have been elected by the Bengal National Chamber of Commerce to be Commissioners for the Port of Calcutta, with effect from the 9th March 1935.

D. GLADDING,

Secy. to the Govt. of Bengal.

DEPARTMENT OF AGRICULTURE AND INDUSTRIES.

Zoological Garden.

NOTIFICATIONS.

Minister-in-charge: The Hon'ble Nawab K. G. M, Faroqui, Khan Bahadur.

Calcutta.—No. 1267Z.G.—2nd March 1935.—Mr. Sudhanshu Kumar Mitter, a Councillor of the Corporation of Calcutta, is appointed to be a member of the Honorary Committee of Management of the Zoological Garden, Calcutta, for the year 1934-35.

Calcutta.—No. 1268Z.G.—2nd March 1935.—Babu Phanindra Nath Brahma, Councillor of Ward No. 23, Corporation of Calcutta, is reappointed to be a member of the Honorary Committee of Management of the Zoological Garden, Calcutta, for the year 1934-35.

Forests.

NOTIFICATION.

No 262For.—9th March 1935.—Government have had under their consideration the question of the preservation of wild birds and animals in forests owned by private proprietors, in some of which it is believed that animal and bird life has been seriously reduced or even in some cases exterminated by poachers and professional *shikaris*. The hunting, shooting and fishing rules framed under sections 26(*1*)(*i*) and 32(*j*) of the Indian Forest Act, 1927, do not apply to private forests, and their proprietors have no remedy against unauthorised hunters, but Government are advised that it is open to them under section 38(*1*)(*b*) of the Act on the application of the owners of private forests to apply section 32(*j*) of the Act to such forests and to make rules regulating hunting, shooting and fishing within their areas. They have accordingly framed the following model rules, which may be made applicable to any private forest by notification in the *Calcutta Gazette* on receipt through the Collector of a written application under section 32(*1*)(*b*) of the Act from the owners of the forest or, where there is more than one owner, of the owners of shares representing at least two-thirds of the properties.

The rules are published for general information.

Model Rules.

Rules to regulate hunting, shooting and fishing, poisoning of water and setting of traps and snares in private forests to which section 32(j) of the Forest Act applies under section 38(2).

Whereas the Local Government have by notification under section 38(*2*) of the Forest Act applied section 32(*j*) of the Forest Act to the forest the following rules to regulate hunting, shooting, poisoning of water, setting of traps and snares shall be in force in the said forests.

1. The Local Government may appoint any of the owners of such forest to exercise the powers of an authorised owner under these rules and may in addition to the forest officers of the Forest Department exercising jurisdiction over the forest in virtue of any section of the Act which has been applied to the forest, appoint any other person to be a Forest Officer for the purposes of these rules or of any section of the Act which has been applied to the forest,

2. No person shall in any such forest poison any water and no person other than a person authorised to do so by a permit under rule 7 shall—

(*a*) use any pitfall, trap or snare or net for catching any wild animal or bird;

(*b*) shoot any bird or animal by aid of a light attached or connected to a motor car: or shoot any bird or animal other than carnivorous animals by aid of any artificial light or from a *machan* between sunset and sunrise; or

(*c*) shoot any animal at or in the vicinity of a salt lick or drinking place.

3. The close seasons to be observed shall be those prescribed by law for the time being in force in the area in which the forest is situated.

4. No person other than an authorised owner or a person authorised by a permit under rule 7 shall hunt or shoot or capture any wild animal or bird in such forest unless he is the holder of a valid permit in Form X appended to these rules and no such holder shall hunt or shoot or capture otherwise than in accordance with the conditions of such permit.

5. An authorised owner may issue a permit in Form X appended to these rules to hunt or shoot or capture and such permit shall be valid for such period not exceeding one year from the date of issue as may be stated therein unless previously cancelled. The authorised owner may make the permit valid for a particular part of the forest only or for certain kinds of animals or birds only and may limit the number of any animals or birds which may be hunted or shot or captured by the permit holder.

6. If there are several owners of the forest, the co-sharers, on whose representation the provisions of the Act have been applied, may fix the scale of fees for issue of permits and in case of disagreement among them the Local Government may prescribe a scale of fees and thereafter the authorised owner shall at the end of every year be liable to make proportionate payment to his co-sharers in accordance with such scale in respect of permits issued by him, except to those who may have declared their intention of not demanding any share in such fees.

7. If the Local Government are of opinion that it is necessary in the public interest that any particular animal or class of animals found in the said forest should be destroyed or reduced in number, they may authorise the District Magistrate of the district in which the said forest is situate to issue free permits for hunting or shooting, capturing, trapping or snaring such animals in the said forests to such persons for such period and subject to such conditions as he may think fit and to cancel the same when he thinks fit.

8. Every person to whom a permit has been granted under these rules, and who is found hunting, shooting, capturing, snaring or trapping or attempting to do so in any forest to which these rules apply shall, on demand by a Magistrate, Forest Officer, or Police Officer having jurisdiction in the locality, produce his permit and shall be bound to state his name and permanent address and present address.

9. A permit granted under these rules other than a permit granted under rule 7 may be cancelled at any time by the authorised owner who granted it.

10. These rules shall be subject to the provisions of the Elephants Preservation Act, 1879, and the Bengal Rhinoceros Preservation Act, 1932, and any law for the protection of wild animals or birds which is in force in the said forest.

11. Any permit holder or other person who commits a breach of any of these rules or of the condition of a permit granted to him under these rules or of any provision of the Act, or rule made thereunder, which is in force in the said forest shall be liable to prosecution under section 33(*h*) of the Act or such other section of the Act as may be applicable, and in lieu of or in addition to any other punishment to which such person may be liable, the District Magistrate may cancel his permit, if any, and may prohibit the grant of a permit to such person for such period as he may think fit.

Form X.

Permit granted under the Private Forests Hunting and Shooting rules.

Permit to hunt and shoot wild animals or birds (or specify kind and number).

In the Forest notified under Notification No. , dated the

This permit is valid from the for one year (to specific date) if not previously cancelled and for the whole of the said Forest (or specify area) subject to the conditions stated on the reverse—

Name.....

Permit holder.....

Address.....

Fee paid if any.....

Date.....

Signature of authorised owner under notification No....., dated.....

Reverse.

(1) This permit is not transferable.

(2) The holder shall observe the close seasons prescribed by law.

(3) No wild elephant or rhinoceros (add others if necessary) .....shall be hunted, shot at, killed, injured or captured.

(4) The use of pitfalls, traps or snares is forbidden.

(5) The holder of a permit shall not employ beaters armed with fire-arms unless he has previously obtained the special permission to employ such beaters from the District Officer or the Divisional Forest Officer.

(6) Breach of any of the conditions of this permit or of any of the rules under which it has been issued will render the permit liable to cancellation in addition to any punishment to which the holder thereof may be liable under the law.

J. D. V. HODGE,
Secy. to the Govt. of Bengal.

Orders by the Conservator of Forests, Bengal.

Chittagong. — No. 3541For.—5th March 1935.—Babu Surendra Kumar Datta, Extra Assistant Conservator of Forests, attached to the Chittagong Division, is posted to the charge of the Sadar subdivision of the Chittagong Division, with headquarters at Chittagong, with effect from the afternoon of the 11th February 1935.

Buxa.—No. 3544For.—5th March 1935.—On return from the leave granted to him in this office notification No. 32For., dated the 3rd January 1935, Babu Samson Sitling, Extra Assistant Conservator of Forests, is posted to the charge of the Rajabhatkhawa subdivision, Buxa Division, with headquarters at Rajabhatkhawa, with effect from the forenoon of the 1st February 1935.

Buxa.—No. 3545For.—5th March 1935.—On relief by Babu Samson Sitling, Extra Assistant Conservator of Forests, Babu Shib Chandra Chatarji, Extra Assistant Conservator of Forests, is transferred and posted to the charge of the Kumargram-Duar subdivision, Buxa Division, with headquarters at Kumargram-Duar, with effect from the forenoon of the 11th February 1935.

E. O. SHEBBEARE,
Conservator of Forests, Bengal.

Orders by the Director of Agriculture, Bengal.

No. 4025A.—9th March 1935.—Mr. A. R. Malik, Senior Marketing Officer, Bengal, is granted in terms of Fundamental Rule 81 (*b*) (*ii*) leave on average pay for four days, with effect from 11th March 1935, with permission to affix the Id-uz-zoha holidays and Sunday to his leave.

K. McLEAN,
Director of Agriculture, Bengal (offg.).

REVENUE DEPARTMENT.

Land Revenue.

NOTIFICATIONS.

Nadia-Murshidabad-Rajshahi.—No. 3742-L.R.—9th March 1935.—Under the provisions of section 3 (*14*) of the Bengal Tenancy Act, 1885 (Act VIII of 1885), the undermentioned settlement kanungos are authorised to discharge, in the districts of Nadia-Murshidabad and Rajshahi, the functions of a Revenue Officer, under Chapter X of that Act, so far as they relate to surveys and the preparation of record-of-rights:—

Babu Narendra Chandra Banarji.
Babu Hari Mohan Datta.
Babu Chandra Mohan Datta.
Babu Anukul Chandra Das Gupta.

Tippera.—No. 3752L.R.—9th March 1935.—It is hereby notified that the survey carried out under the orders of Government under section 3 of the Bengal Survey Act, 1875 (Bengal Act V of 1875), and sub-section (*1*) of section 101 of the Bengal Tenancy Act, 1885 (Act VIII of 1885), and particulars whereof have been embodied in the undermentioned notifications is adopted as defining villages for the purpose of clause 19 (*b*) of section 3 of the Bengal Tenancy Act, 1885 (Act VIII of 1885), in the estates "Tajpur Sonarpur" (tauzi No. 2296) and "Char Haim" (tauzi No. 1862) of the Tippera Collectorate situated in police-station Chandpur in the district of Tippera:—

Notification No. 7666L.R., dated the 28th March 1928.

Notification No. 7667L.R., dated the 28th March 1928.

Notification No. 16866L.R., dated the 15th September 1928.

Tippera.—No. 3753L.R.—9th March 1935.—In exercise of the power conferred by sub-clause (*b*) of clause (*7*) of section 3 of Land Registration Act, 1876 (Bengal Act VII of 1876), the Governor in Council is pleased to adopt the villages lying within the estates "Tajpur Sonarpur" and "Char Haim" (tauzi Nos. 2296 and 1862, respectively of the Tippera Collectorate), situated in police-station Chandpur within the administrative units of the district of Tippera, as surveyed and recorded under the Bengal Tenancy Act (Act VIII of 1885) and the Bengal Survey Act (Bengal Act V of 1875) in accordance with notification Nos. 7666L.R., 7667L.R., dated the 28th March 1928, and No. 16866L.R., dated the 15th September 1928, as defining mauzas for the purpose of that clause in the said estates in that district.

Land Acquisition.

NOTIFICATIONS.

Nadia.—No. 3721L.A.—9th March 1935.—Whereas it appears to the Governor in Council that land is likely to be required to be taken by Government at the expense of the Nadia district board for a public purpose, viz., for an approach road to Dakda-Kupda ferry, in the village of Majampur, jurisdiction list No. 33, thana Kushtia, pargana Mahammadshahi, zilla Nadia, it is hereby notified that for the above purpose a piece of land, comprising part of cadastral plot No. 629, and measuring, more or less, 0.02 of an acre, is likely to be required within the aforesaid village of Majampur.

This notification is made, under the provisions of section 4 of the Act I of 1894, to all whom it may concern.

A plan of the land may be inspected in the office of the Subdivisional Officer, Kushtia.

In exercise of the powers conferred by the aforesaid section, the Governor in Council is pleased to authorise the officers for the time

being engaged in the undertaking, with their servants and workmen, to enter upon and survey the land and do all other acts required or permitted by that section.

Any person interested in the above land, who has any objection to the acquisition thereof, may, within thirty days after the date on which public notice of the substance of this notification is given in the locality, file an objection in writing before the Collector of Nadia.

Calcutta. — No. 3724L.A. — 9th March 1935.—Whereas it appears to the Governor in Council that land is likely to be required to be taken by Government at the expense of the Jatiya Ayurbijnan Parishad, for the extension of Chittaranjan Hospital and School on Gorachand Road in ward No. 20 of the Calcutta Municipality in the city of Calcutta, it is hereby notified that for the above purpose four pieces of land altogether measuring, more or less, 2;9742 acres, bounded as below—

Plot I :

Premises Nos. 25, 26 and 27, Gorachand Road.

North—By premises No. 28, Gorachand Road and Chittaranjan Hospital,

East—By Chittaranjan Hospital,

South—By Gorachand Road,

West—By premises No. 28, Gorachand Road,

Plot II:

Premises No. 30, Gorachand Road.

North—By Chittaranjan Hospital and School,

East—By premises No. 28, Gorachand Road,

South—By Gorachand Road,

West—By premises No. 31, Gorachand Road,

Plot III:

Premises No. 16, Dihi-Serampur Road.

North—By premises Nos. 17, 18 and 19, Dihi-Serampur Road,

East—By premises Nos. 12/1, 13, 14 and 15, Dihi-Serampur Road and Dihi-Serampur Road,

South—By Chittaranjan Hospital and municipal drain,

West—By a common passage,

Plot IV:

Premises Nos. 21, 22, 22/1, 23, 24, 25A, and 25B, Dihi-Serampur Road, and portion of 25, Dihi-Serampur Road.

North—By premises No. 28, Dihi-Serampur Road and the remaining portion of premises No. 25, Dihi-Serampur Road,

East—By a common passage,

South and West—By municipal drain,

are likely to be required within aforesaid ward No. 20 of the Calcutta Municipality in the city of Calcutta.

This notification is made, under the provisions of section 4 of Act I of 1894, to all whom it may concern.

A plan of the land may be inspected in the office of the Second Land Acquisition Collector at No. 5, Bankshall Street, Calcutta.

In exercise of the powers conferred by the aforesaid section, the Governor in Council is pleased to authorise the officers for the time being engaged in the undertaking, with their servants and workmen, to enter upon and survey the land and do all other acts required or permitted by that section.

Any person interested in the above land, who has any objection to the acquisition thereof, may within thirty days after the date on which public notice of the substance of this notification is given in the locality, file an objection in writing before the Second Land Acquisition Collector at No. 5, Bankshall Street, Calcutta.

Hooghly.—No. 3727L.A.--9th March 1935.—Whereas it appears to the Governor in Council that land is likely to be required to be taken by Government at the expense of the Serampore Municipality for a public purpose, viz., for the burning ghat at Ballavpur, in the village of Ballavpur, jurisdiction list No. 18, thana Serampore, pargana Boro, district Hooghly, it is hereby notified that for the above purpose a piece of land comprising parts of cadastral plot Nos. 2221 and 2221/2263 and measuring, more or less, 0·046 of an acre, bounded on the—

North—By plot No. 2218 municipal land,

East—By part of plot No. 2221,

South—By parts of plot Nos. 2221 and 2221/2263,

West—By part of plot No. 2221/2263,

is likely to be required within the aforesaid village of Ballavpur.

This notification is made, under the provisions of section 4 of Act I of 1894, to all whom it may concern.

A plan of the land may be inspected in the office of the Land Acquisition Officer, Serampore.

In exercise of the powers conferred by the aforesaid section, the Governor in Council is pleased to authorise the officers for the time being engaged in the undertaking, with their servants and workmen, to enter upon and survey the land and do all other acts required or permitted by that section.

Any person interested in the above land, who has any objection to the acquisition thereof, may within thirty days after the date on which public notice of the substance of this notification is given in the locality, file an objection in writing before Collector of Hooghly.

24-Parganas.—No. 3739L.A. — 9th March 1935.—Whereas it appears to the Governor in Council that land is likely to be required to be taken by Government at the expense of the Taki Samabaya Samity, for construction of office building for the Taki Samabaya Samity, in the village of Taki, jurisdiction list No. 51, thana Hasnabad, pargana Agarpara, district 24-Parganas, it is hereby notified that for the above purpose a piece of land comprising cadastral plot Nos. 1542 and 1543, and measuring, more or less, 0·26 of an acre, is likely to be required within the aforesaid village of Taki.

This notification is made, under the provisions of section 4 of Act I of 1894, to all whom it may concern.

A plan of the land may be inspected in the office of the Land Acquisition Deputy Collector, Alipore.

In exercise of the powers conferred by the aforesaid section, the Governor in Council is pleased to authorise the officers for the time being engaged in the undertaking, with their servants and workmen, to enter upon and survey the land and do all other acts required or permitted by that section.

Any person interested in the above land, who has any objection to the acquisition thereof, may, within thirty days after the date on which public notice of the substance of this notification is given in the locality, file an objection in writing before the Collector of the 24-Parganas.

DECLARATIONS.

Khulna.—No. 3715L.A.—9th March 1935.—Whereas it appears to the Governor in Council that land is required to be taken by Government at the public expense for a public purpose, viz., for the improvement of the Kodla Math in the village of Ajodhya, jurisdiction list No. 39, thana Bagerhat, pargana Sultanpur Khararia, zilla Khulna, it is hereby declared that for the above purpose a piece of land, comprising parts of cadastral plot Nos. 554 and 557 and cadastral survey plot No. 553, and measuring, more or less, 0·316 of an acre, is required within the aforesaid village of Ajodhya.

This declaration is made, under the provisions of section 6 of Act I of 1894, to all whom it may concern.

A plan of the land may be inspected in the office of the Subdivisional Officer, Bagerhat.

Bakarganj. — No. 3718L.A. — 9th March 1935.—Whereas it appears to the Governor in Council that land is required to be taken by Government at the expense of the Arya Laksmi Co-operative Bank, Ltd., Barisal, for the construction of its office buildings and staff quarters in the village of Bagura Alekanda, pargana Chandradwip, zilla Bakarganj, it is hereby declared that for the above purpose a piece of land measuring, more or less, 0·1140 of an acre, comprising cadastral survey plot Nos. 3583 and 3584, and portions of cadastral survey plot Nos. 3585, 3587, 3588 and 3589, is required within the aforesaid village of Bagura Alekanda.

This declaration is made, under the provisions of section 6 of Act I of 1894, to all whom it may concern.

A plan of the land may be inspected in the office of the Collector of Bakarganj.

Burdwan.—No. 3730L.A.—9th March 1935.—Whereas it appears to the Governor in Council that land is required to be taken by Government at the public expense for a public purpose, viz., for constructing the approaches to 1·25 feet fall and bridge at mile 15, chainage 24 and 34 feet of distributary No. 6, main canal, Damodar Canal Project, in the village of Faridpur, jurisdiction list No. 127, thana Burdwan, pargana Shahabad, district Burdwan, it is hereby declared that for the above purpose two pieces of land comprising parts of cadastral survey plot Nos. 1362, 1363, 2609-2613, and altogether measuring, more or less, 0·95 of an acre, are required within the aforesaid village of Faridpur.

This declaration is made, under the provisions of section 6 of Act I of 1894, to all whom it may concern.

A plan of the land may be inspected in the office of the Special Land Acquisition Officer, Burdwan, as well as in that of the Executive Engineer, Damodar Canal Division, Burdwan.

24-Parganas.—No. 3733L.A.—9th March 1935.—Whereas it appears to the Governor in Council that land is required to be taken by Government at the expense of the district board, 24-Parganas, for a public purpose, viz., for the dispensary building at Sandeshkhali, in the village of Dwarirjangal, jurisdiction list No. 37, thana Sandeshkhali, pargana Sundarban, district 24-Parganas, it is hereby declared that for the above purpose a piece of land comprising portions of cadastral plot Nos. 3253 and 3255, and measuring, more or less, 0·8035 of an acre, is required within the aforesaid village of Dwarirjangal.

This declaration is made, under the provisions of section 6 of Act I of 1894, to all whom it may concern.

A plan of the land may be inspected in the office of the District Engineer, 24-Parganas.

24-Parganas.—No. 3736L.A.—9th March 1935.—Whereas it appears to the Governor in Council that land is required to be taken by Government at the expense of the Bhatpara Municipality for a public purpose, viz., for straightening the Sundia Village Road and Chord Road in connection with Bhatpara improvement scheme, in the village of Sundia, jurisdiction List No. 14, thana Jagaddal, pargana Havelisahar, district 24-Parganas, it is hereby declared that for the above purpose

three pieces of land, comprising portions of cadastral plot Nos. 135, 136, 139, 412 and 413, and altogether measuring, more or less, 0·1694 of an acre, are required within the aforesaid village of Sundia.

This declaration is made, under the provisions of section 6 of Act I of 1894, to all whom it may concern.

A plan of the land may be inspected in the office of the Commissioners of the Bhatpara Municipality, as well as in that of the Special Land Acquisition Officer at Alipore, 24-Parganas.

24-Parganas.—No. 3749L.A.—9th March 1935.—Whereas it appears to the Governor in Council that land is required to be taken by Government at the expense of the Calcutta Electric Supply Corporation, Limited, for the erection of an additional power station at Mulajore in the village of Mulajore, jurisdiction List No. 18, thana Jagaddal, pargana Havelisahar, district 24-Parganas, it is hereby declared that for the above purpose a piece of land, comprising cadastral plot Nos. 349, 350, 117, 118, 119, 120, 121, 122, 125, 126, 127, 128, 129, 130, 131, 134, 135, 136, 143, 144, 1112, 1113, 1114, 1115, 145, 146, 147, 148, 149, 150, 151, 152, 153, 154, 163, 165, 166, 168, 169, 170, 171, 172, 173, 174, 175, 176, 177, 178, 179, 180, 181, 182, 183, 184, 185, 188, 189, 190, 224 and 1116, and measuring, more or less, 43·62 acres is required within the aforesaid village of Mulajor.

This declaration is made, under the provisions of section 6 of Act I of 1894, to all whom it may concern.

A plan of the land may be inspected in the office of the Land Acquisition Deputy Collector, Alipore, 24-Parganas.

Bankura.—No. 3800L.A.—11th March 1935.—Whereas it appears to the Governor in Council that land is required to be taken by Government at the expense of the Bankura district board for a public purpose, viz., for improvement of the north approach of Sali river in the village of Enayetpur, jurisdiction list No. 120, in thana Barjora, pargana Vishnupur, district Bankura, it is hereby declared that for the above purpose a piece of land, comprising parts of cadastral survey plots Nos. 233, 237, 238 and 240 and entire plot No. 239, and measuring, more or less, 1·32 acres, is required within the aforesaid village of Enayetpur.

This declaration is made, under the provisions of section 6 of Act I of 1894, to all whom it may concern.

A plan of the land may be inspected in the office of the Collector of Bankura.

Excise.

NOTIFICATIONS.

No. 237Ex.—8th March 1935.—In exercise of the power conferred by rule 14 of the Sugar (Excise Duty) Order, 1934, and in supersession of notification No. 202T.A.I., dated the 24th May 1934, the Governor in Council is pleased to empower—

(*1*) all officers of the Land Revenue Department, not below the rank of Sub-Deputy Collector, and

(*2*) all officers of the Police and Excise Departments, not below the rank of Sub-Inspector,

to search any place, vessel, cart or means of conveyance for sugar liable to duty and to seize and remove or detain any sugar in respect of which it appears to them that duty should have been but has not been levied or that any contravention of the provisions of the Sugar (Excise Duty) Act, 1934 (XIV of 1934) or of the Sugar (Excise Duty) Order, 1934, has occurred.

Minister-in-charge: The Hon'ble Sir Bijoy Prasad Singh Roy, Kt.

No. 219Ex.—6th March 1935.—In exercise of the power conferred by section 27 of the Bengal Excise Act, 1909 (Bengal Act V of 1909), the Government of Bengal (Ministry of Excise) are pleased to direct that the following proviso be added to item No. 1 in Part II of the schedule to notification No. 2884Ex., dated the 16th July 1931, namely:—

"Provided that duty on India made Brandy, Whisky, Rum and Gin when exported to Cochin State shall be levied at Rs. 17-8 per L.P. gallon."

Calcutta.—No. 238Ex.—8th March 1935.—Babu Hem Chandra De, Personal Assistant to the Commissioner of Excise and Salt, Bengal, is allowed leave on average pay for three days, with effect from 16th April 1935, under rule 81 (*b*) (*ii*) of the Fundamental Rules.

O. M. MARTIN,
Secy. to the Govt. of Bengal.

Orders by the Commissioner of Excise and Salt, Bengal.

No. 61Exc.—11th March 1935.—Babu Santasil Barua, Inspector of Excise and Salt, Calcutta, is allowed leave on average pay for eleven days, with effect from 4th March 1935, under rule 81 (*b*) (*ii*) of the Fundamental Rules.

S. K. HALDAR,
Commr. of Excise and Salt, Bengal.

IRRIGATION DEPARTMENT.

Irrigation.

NOTIFICATION.

No. 2-I. — 22nd February 1935. — The following draft of amendments, which in exercise of the powers conferred by section 11 of the Canals Act, 1864 (Bengal Act V of 1864), the Governor in Council intends to make in the revised rules for the Calcutta and Eastern Canals, Tolly's Nala and Sundarbans Steamer Route (published in Bengal Government notification No. 16-I., dated the 14th April 1924, at pages 829-34, Part I of the *Calcutta Gazette* of the 16th idem), is hereby published for the information of persons likely to be affected thereby.

The draft will be taken into consideration on or after the 18th April 1935, and any objections or suggestion received by the undersigned before that date will be considered:—

Draft amendments.

Insert the following new rules as rules 31 and 32 of the said rules:—

Rule 31.—No vessel or raft or float, except Government vessels plying in the interests of Government service, shall pass the Kristopur Toll Station in either direction, between 7 p.m. and 6 a.m. Service motor launches, carrying passengers, plying on monthly toll tickets, may, however, pass the Toll Office up to 9 p.m.

Rule 32.—In case a service motor launch carrying passengers wishes to pass the Kristopur Toll Station between 9 p.m. and 7 a.m. a single trip toll will be realised from the same, in addition to any previous toll paid by the launch on a single or monthly ticket.

J. D. V. HODGE,

Secy. to the Govt. of Bengal.

BENGAL LEGISLATIVE COUNCIL DEPARTMENT.

NOTIFICATION.

No. 1358L.C.—11th March, 1935.—It is hereby notified in pursuance of rule 14 (*9*) of the Bengal Electoral Rules that Mr. C. G. Arthur has been declared under rule 14 (*2*) of the aforesaid Rules to have been duly elected by the Indian Tea Association constituency to be a member of the Bengal Legislative Council.

J. W. MCKAY,

Secy. to the Bengal Legis. Council.

BOARD OF REVENUE, BENGAL.

NOTIFICATION.

Noakhali.—No. 4121C.P.—9th March 1935.—In exercise of powers conferred by clause (*2*) of section 8 of the Bengal Land Revenue (Assistant Collectors) Regulation, 1821 (IV of 1821), the Board of Revenue authorises Babu Mahim Chandra Dutta, Settlement Kanungo, who has been placed on duty in connection with the maintenance, for the purposes of section 158A of the Bengal Tenancy Act, 1885, of the record-of-rights of the estates of Maulvi Fakhrul Islam Choudhuri and others and also in the estate of the Haidar Zamindary, Ltd., in the district of Noakhali, to exercise and perform within the local limits of the said estates any of the powers and duties vested in the Collectors of Land Revenue under any enactment in force therein for the purpose of the said work of maintenance of the record-of-rights.

M. O. CARTER,

Secy. to the Board of Revenue, Bengal.

HIGH COURT NOTICES.

Original Side.

Calcutta, the 4th March 1935.

It is ordered that with effect from 1st July 1935, rule 22 of Chapter II of the Rules and Orders of the Calcutta High Court, Original Side, 1914, be repealed and in lieu thereof the following be substituted:—

22. The number of questions in each paper in each examination shall be ten, and the aggregate number of marks in each paper shall be 200. To be entitled to pass, a candidate must obtain 100 marks in each paper and 62½ per cent. of the aggregate number of marks obtainable in the examination.

Calcutta, the 6th March 1935.

It is ordered that with effect from 1st March 1935, rule 2, paragraph 3 of Chapter III of the Rules and Orders of the Calcutta High Court, Original Side, 1914, be repealed and in lieu thereof the following be substituted:—

The long vacation shall ordinarily commence on the last Friday in August, and end about seventy-two days thereafter, but whenever possible, without unduly prolonging the hot weather period between the Easter and the long vacations and without unduly shortening the period between the long vacation and Christmas, shall include Mohalaya, Durga, Lakhi and Kali Pujas, Bhratridwitya and Jagadhatri Pujas and any Mahomedan holidays generally falling within the period of the long vacation.

By order of the High Court,

A. L. COLLET, *Registrar.*

Court of Small Causes of Calcutta.

The following list of holidays, to be observed in the year 1935, as holidays in the Court of Small Causes, Calcutta, as sanctioned by the Local Government, is published in accordance with the provisions of section 92 of Act XV of 1882 (Presidency Small Cause Courts Act) :—

Names of holidays.	English date.	Bengali date.	Days of the week.	Number of days.
	1935.	1341.		
New Year's Day ..	1st January ..	16th Pous ..	Tuesday	1
Id-ul-Fitr	7th and 8th January ..	22nd and 23rd Pous ..	Monday and Tuesday ..	2
Maghotsav (1)	24th, 25th and 26th January.	10th, 11th and 12th Magh.	Thursday, Friday and Saturday.	3
Sri Panchami	8th and 9th February	25th and 26th Magh	Friday and Saturday ..	2
Id-uz-zuha	15th and 16th March	1st and 2nd Chaitra ..	Friday and Saturday ..	2
Dol-Jatra	20th March ..	6th Chaitra ..	Wednesday ..	1
Baruni Gangasnan (2) ..	1st April ..	18th Chaitra ..	Monday	1
Chaitra Sankranti ..	13th April ..	30th Chaitra ..	Saturday	1
		1342.		
Bengali New Year's Day (2) ..	14th April ..	1st Baisakh ..	Sunday	1
Muharram	15th April ..	2nd Baisakh ..	Monday	1
Good Friday to Easter Monday	19th to 22nd April ..	6th to 9th Baisakh	Friday to Monday ..	4
King-Emperor's Silver Jubilee	(To be fixed by Government hereafter.)			
King-Emperor's Birthday ..	(The day which may be fixed for celebration in India of the King-Emperor's Birthday will be notified separately in due course.)			1
Dasahara Gangasnan ..	11th June ..	28th Jaistha ..	Tuesday	1
Fatiha Duwazdaham ..	14th June ..	31st Jaistha ..	Friday	1
Ditto (2) ..	15th June ..	32nd Jaistha ..	Saturday	1
Half-yearly closing of Banks' Accounts.	1st July ..	16th Ashar ..	Monday	1
Ratha Jatra (2)	2nd July ..	17th Ashar ..	Tuesday	1
Janmastami	21st August ..	4th Bhadra ..	Wednesday	1
Dassera vacation including Mahalaya, Durga, Laksmi and Kali Pujas and Bhatri-dwitya.	27th September to 20th October.	10th Aswin to 12th Kartic.	Friday to Tuesday ..	33
Jagadhatri Puja	5th and 6th November	19th and 20th Kartic	Tuesday and Wednesday	2
Shab-i-Barat (2)	12th November ..	26th Kartic ..	Tuesday	1
Christmas holidays ..	24th December to 31st December.	8th to 15th Pous ..	Tuesday to Tuesday ..	8

NOTE.—Muhammadan officials and employees of this Court are allowed to absent themselves from office on the following days in addition to those mentioned above :—

Muharram—

(1) For Sunni Muhammadans .. .. 1 day.

(2) For Shia Muhammadans .. .. 2 days.

Akhiri Chahar Shamba .. .. .. 1 day.

If any of the Muhammadan holidays notified above does not fall on the day notified, the Muhammadan officials and employees of the court of Small Causes, Calcutta, may be granted a sectional holiday on the day on which the holiday is actually observed in addition to a holiday on the day notified.

(1) All officials, suitors and witnesses who profess the Brahmo faith may be granted, when possible, three days' holidays on account of Maghotsav, viz., on the 24th, 25th and 26th January 1935.

(2) Local holidays; besides these, also the Solar eclipse day and the day following a Lunar eclipse during the year shall also be observed as local holidays.

The 1st March 1935. P. C. DE, *Registrar.*

ORDERS BY COMMISSIONERS OF DIVISIONS.

Burdwan Division—Chinsura.

No. 412M.—7th March 1935.—It is hereby notified for general information that, under rule 20 (*b*) of the rules for the management of charitable hospitals and dispensaries in Bengal, the following gentlemen have been appointed to be members of the committee for the management of the Katwa Charitable Dispensary in the district of Burdwan :—

The Subdivisional Officer, Katwa (*ex-officio*).

The Subdivisional Medical Officer, Katwa (*ex-officio*).

Dr. Durgapada Mukherjee.

Babu Shib Nath Banerjee.

Babu Indu Bhusan Sain.

Maulvi Mowla Newaz.

Babu Janaki Lal Khandelwala.

Babu Monimohan Chandra.

Babu Girija Bhusan Chatterjee.

Corrigendum.—No. 501L.S.-G.—7th March 1935.—In notification No. 2831L.S.-G., dated the 13th November 1934, published at page 1845, Part I of the *Calcutta Gazette*, dated the 22nd November 1934, *read* Babu Nogendra Nath Ghor instead of Babu Nogendra Nath Ghosh.

No. 504L.S.-G.—7th March 1935.—It is hereby notified for general information that, under rule 20 (*b*) read with rule 23 of the rules for the management of charitable hospitals and dispensaries in Bengal, Babu Basanta Prosad Samanta has been appointed to be a member of the committee for the management of the charitable dispensary at Kelomal in the district of Midnapore, *vice* Babu Hem Chandra Bose, deceased.

L. B. BURROWS, *Commissioner.*

Bankura, the 5th March 1935.

No. 1148J. — It is hereby notified for general information that, under sub-section (*2*) of section 6 of the Bengal Village Self-Government Act, 1919 (Bengal Act V of 1919), the following gentlemen have been duly elected to be members of the under-mentioned union boards in the Vishnupur sub-division of the district of Bankura:—

Vishnupur police-station.

Layekbandh union board.

Ward No. I.

Babu Radharaman Mukherjee.
Babu Purna Chandra Dharla.

Ward No. III.

Babu Sashi Bhusan Chatterjee.
Babu Jagat Chandra Tung.
Babu Gour Gopal Goswami.

Bhara union board.

Ward No. I.

Babu Amar Nath Chaudhury.

Ward No. II.

Babu Bhupati Nath Mandal.

Ward No. III.

Babu Bhutnath Chakravarty.

Ward No. IV.

Babu Rajendra Nath Mandal.

Ward No. V.

Babu Satyakinkar Chatterjee.

Ward No. VI.

Babu Surendra Nath Mandal.

Uliara union board.

Ward No. I.

Munshi Sajed Rahman.

Ward No. II.

Babu Sagar Chandra Mandal.

Ward No. IV.

Babu Akshay Kumar Palit.

Ward No. V.

Babu Hrishikesh Ganguly.

Ward No. VI.

Babu Amulya Ratan Goswami.

Radhanagar union board.

Ward No. I.

Babu Tripura Charan Sarma.

Ward No. II.

Babu Ambujaksa Kaviraj.

Ward No. III.

Babu Amulya Ratan Roy.

Ward No. IV.

Babu Bhuban Mohan Paramanik.
Babu Sriram Nandi.
Babu Krishna Kishore Mukherjee.

Ajodhya union board.

Ward No. II.

Babu Mahitosh Mukherjee.
Babu Barid Baran Banerjee.

Ward No. III.

Babu Ashutosh Banerjee.

Ward No. IV.

Babu Anadi Nath Goswami.

Ward No. V.

Babu Dibakar Acharyya.

Dwarika union board.

Ward No. I.

Babu Bagala Prasanna Chakravarty.
Babu Kesab Chandra Satait.

Ward No. II.

Babu Jogendra Nath Chakravarty.

Ward No. III.

Babu Ramgobinda Mallik.

Ward No. IV.

Munshi Paran Shaikh.
Babu Kedarnath Roy.

Marar union board.

Ward No. I.

Babu Kshitish Chandra Chaudhury.

Ward No. II.

Babu Prasanna Kumar Ghose.

Ward No. III.

Munshi Shaikh Jamdan Khan.
Babu Benode Behari Ghosh.

Ward No. IV.

Babu Rakhal Chandra Das.

Ward No. V.

Babu Govinda Chandra Dey.

Gossainpur union board.

Ward No. I.

Babu Atul Chandra Malla.

Ward No. II.

Babu Maheswar Roy.
Babu Jogendra Nath Biswas.

Ward No. III.

Babu Ashutosh Palit.

Ward No. IV.

Babu Hrishikesh De.

Belsulia union board.

Ward No. I.

Babu Rakhal Chandra Dey.
Munshi Fakir Mandal.

Ward No. II.

Munshi Shaikh Oshman Khan.

Ward No. III.

Munshi Nasiruddin Choudhury.
Munshi Meher Dalal.
Babu Promatha Nath Roy.

Bankadaha union board.

Ward No. I.

Babu Haripada Bhattacharya.

Ward No. II.

Babu Girish Chandra Mondal.

Ward No. III.

Babu Bishnudas Charan.
Babu Raicharan Mandal.

Ward No. IV.

Babu Sitkrishna Makur.

Joypur police-station.

Shyamnagar union board.

Ward No. II.

Babu Ramsatya Mahanta.

Ward No. III.

Babu Priyanath Bhattacharya.
Babu Jotindra Mohan Chatterjee.

Ward No. IV.

Babu Radhashyam Chandra.

Ward No. V.

Babu Bhusan Chandra Dey.

Rautkhanda union board.

Ward No. I.

Babu Mahesh Chandra Biswas.

Ward No. II.

Babu Bhuban Mohan Biswas.

Ward No. III.

Babu Chandi Charan Batabyal.
Babu Mihir Lal Mukherjee.

Ward No. IV.

Babu Sudhir Chandra Roy.
Babu Upendra Nath Mandal.

Hetia union board.

Ward No. I.

Babu Tinkari Ganguly.

Ward No. II.

Babu Janakinath Chaudhury.

Ward No. IV.

Babu Haripada Dey.

Ward No. V.

Babu Nagendranath Bhattacharya.
Babu Jagat Chandra Koley.

Gelia union board.

Ward No. I.

Babu Annada Prosad Mukherjee.

Ward No. II.

Babu Ashutosh Dutta.

Ward Nos. III-IV.

Babu Sakti Pada Chatterjee.
Babu Bibhuti Bhusan Panda.

Ward No. V.

Babu Gobinda Chandra Mondal.

Ward No. VI.

Babu Sudhir Kumar Mukherjee.

Salda union board.

Ward No. I.

Dr. Jotindra Nath Dutta.

Ward No. II.

Babu Nilmoni Ghose.
Babu Radharaman Ghatak.
Babu Kalikrishna Patra.

Ward No. III.

Babu Nabadwip Chandra Panja.
Babu Sanjib Chandra Panja.

Kuchiakole union board.

Ward No. I.

Babu Bankim Chandra Dey.

Ward No. II.

Babu Prabodh Chandra Mitra.
Babu Nibaran Chandra Banerjee.
Babu Surja Kumar Mandal.

Ward No. III.

Babu Nirmal Chandra Roy.

Maynapur union board.

Ward No. II.

Babu Gopendra Nath Mukherjee.

Ward No. III.

Babu Amulya Ratan Roy.
Babu Bhuban Mohan Panja.

Ward No. IV.

Babu Bhutnath Dey.

Jagannathpur union board.

Ward No. I.

Babu Nikunja Behari Goswami.
Babu Bhutnath Ghose.

Ward No. II.

Babu Harish Chandra Maur.

Ward No. III.

Babu Banikantha Pratihar.

Ward No. IV.

Babu Bhutnath Chaudhury (No. I).
Munshi Rowshan Ali Mandal.

Uttarbar union board.

Ward No. I.

Babu Mohini Mohan Konar.
Babu Sarat Chandra Khan.

Ward No. II.

Babu Mahabharat Mukherjee.
Babu Kshirod Gopal Chatterjee.

Ward No. III.

Munshi Shaikh Nuran Khan.

Ward No. IV.

Munshi Raisuddin Bhunya.

Kotulpur police-station.

Mirzapur union board.

Ward No. I.

Babu Bholanath Ghosh.

Ward No. II.

Babu Radhanath Kundu.

Ward No. III.

Babu Mohini Mohan Mandal.

Ward No. IV.

Babu Ashutosh Dutta.
Babu Dibakar Sain.
Babu Surya Narayan Khan.

Madanmohanpur union board.

Ward No. I.

Babu Surendra Nath Roy.

Ward No. II.

Babu Sibnarayan Dalal.
Babu Jagabandhu Dalal.

Ward No. III.

Babu Gostha Behari Patra.

Ward No. IV.

Babu Tinkari Mahapatra.

Ward No. V.

Babu Fakir Chandra Roy.

Lawgram union board.

Ward No. I.

Babu Banbehari Mandal.

Ward No. II.

Babu Gobinda Chandra Nandi.

Ward No. III.

Babu Surya Kumar Ta.
Babu Ramesh Chandra Nag.

Ward No. IV.

Babu Bejoy Chand Chandra.

Kotulpur union board.

Ward No. I.

Babu Nibaran Chandra Mukherjee.

Ward No. III.

Babu Felaram Khan.

Ward No. IV.

Babu Ram Sankar Ganguly.

Lego union board.

Ward No. I.

Babu Ram Saran Nandi.

Ward No. II.

Babu Upendra Nath Chakravarty.

Ward No. III.

Babu Bankim Behari Layek.
Babu Ramanath Majumdar.

Ward No. IV.

Babu Manindra Nath Roy.
Babu Tinkari Banerjee.

Gopinathpur union board.

Ward No. I.

Babu Upendra Nath Roy.
Babu Kshudiram Bose.

Ward No. II.

Babu Rampada Sinha Roy.

Ward No. III.

Babu Chandra Kanta Chatterjee.

Ward No. IV.

Babu Chandi Charan Pal.

Ward No. V.

Babu Bholanath Upadhaya.

Desra-Koalpara union board.

Ward No. I.

Babu Haripada Ghosal.

Ward No. II.

Babu Surya Narayan Kundu.

Ward No. III.

Dr. Gobinda Chandra Pal.
Babu Sachindra Nath Ghosh.
Babu Rajkrishna Das.

Ward No. IV.

Babu Bhudeb Chandra Pal.

Sihar union board.

Ward No. I.

Babu Nirod Baran Mukherjee.

Ward No. II.

Munshi Shaikh Khorsed Ali.

Ward No. III.

Babu Sarat Chandra Banerjee.

Ward No. IV.

Babu Bepin Behari Ghose.

Ward No. V.

Babu Golok Behari Ghose.
Babu Prasitosh Roy.

No. 1149J.—It is hereby notified for general information that, under sub-section (3) of section 6 of the Bengal Village Self-Government Act, 1919 (Bengal Act V of 1919), the following gentlemen have been appointed to be the members of the undermentioned union boards in the Vishnupur subdivision of the district of Bankura:—

Vishnupur police-station.

Layekbandh union board.

Babu Rajendra Nath Banerjee.
Babu Isan Chandra Chaudhury.
Babu Panchkari Ganguli.

Bhara union board.

Babu Pramatha Nath Mandal.
Babu Hem Chandra Chakravarty.
Babu Adhar Chandra Mandal.

Uliara union board.

Munshi Shaikh Abdur Rezzak.
Babu Bibhuty Bhusan Ganguly.
Babu Abhiram Sen.

Radhanagar union board.

Babu Bidhubhusan Banerjee.
Babu Hem Chandra Biswas.
Babu Ashutosh Mukherjee.

Ajodhya union board.

Dr. Chandra Bhusan Banerjee.
Babu Arun Chandra Goswami.
Babu Haripada Auddy.

Dwarika union board.

Babu Indra Chandra Barik.
Munshi Munsab Shaikh.
Babu Banbehari Roy.

Marar union board.

Babu Surya Narayan Pal.
Babu Bibhuti Bhusan Goswami.
Babu Laksman Santhal.

Gossainpur union board.

Babu Upendra Nath Barik.
Babu Jotindra Nath Sarkar.
Babu Baikuntha Nath Sarkar.

Belsulia union board.

Babu Gostha Behari Show.
Babu Behari Lal Sardar.
Babu Umapati Dey.

Bankadaha union board.

Babu Tripurari Singha Dev.
Babu Rampada Kaviraj.
Babu Laksman Santhal.

Joypur police-station.

Shyamnagar union board.

Babu Tinkari Hazra.
Babu Ramanath Chatterjee.
Babu Sachipati Basu.

Rautkhanda union board.

Babu Ramdas Bhakta.
Babu Bibhuti Bhusan Goswami.
Munshi Fazlu Middya.

Hetia union board.

Babu Surendra Nath Batabyal.
Babu Devendra Nath Adhikari.
Munshi Karimdad Mian.

Gelia union board.

Munshi Abdul Rauf.
Babu Pulin Behari Sarkar.
Babu Surendra Dey.

Salda union board.

Dr. Surya Narayan Barat.
Babu Satyendra Narayan Majumdar.
Babu Gobinda Gopal Chatterjee.

Kuchiakole union board.

Babu Kshetra Mohan Sinha Thakur.
Babu Kesab Chandra Banerjee.
Babu Haripada Dey.

Maynapur union board.

Babu Rammoy Roy.
Rai Sahib Akalanka Chandra Mukherjee.
Babu Kunja Behari Barui.

Jagannathpur union board.

Babu Manik Lal Banerjee.
Babu Sudhir Chandra Chaudhury.
Babu Surendra Nath Sarkar.

Uttarbar union board.

Babu Satish Chandra Mukherjee.
Babu Manindra Nath Roy.
Babu Bhutnath Ghatak.

Kotulpur police-station.

Mirzapur union board.

Babu Narendra Nath Mandal.
Babu Nityananda Ghose.
Munshi Shaikh Gobardhan.

Madanmohanpur union board.*

Babu Gostha Behari Ghose.
Babu Radhashyam Dalal.
Munshi Abdul Khalil.

Lawgram union board.

Babu Shyam Gopal Chakravarty.
Munshi Ohad Mallik.
Babu Bagala Charan Banerjee.

Kotulpur union board.

Babu Nagendra Nath Singha.
Munshi Abdul Tahid Middya.
Babu Surya Kumar Mal.

Lego union board.

Babu Jnanada Prasad Nandi.
Babu Purna Chandra Mukherjee.
Babu Bibhuti Bhusan Mukherjee.

Gopinathpur union board.

Munshi Shaikh Ajmat Khan.
Babu Bhupati Charan Sahana.
Babu Nanda Lal Mandal.

Desra-Koalpara union board.

Babu Laksmi Narayan Ghose.
Maulvi Abdul Based Khan.
Babu Pasupati Nandi.

Sihar union board.

Munshi Ibrahim Midhya.
Babu Kali Kumar Mukherjee.
Babu Jugal Kishore Mandal.

No. 1150J.—It is hereby notified for general information that, under sub-section (*4*) of section 6 of the Bengal Village Self-Government Act, 1919 (Bengal Act V of 1919), the following gentlemen have been appointed to be the members of the undermentioned union boards in the Vishnupur subdivision of the district of Bankura:—

Vishnupur police-station.

Layekbandh union board.

Ward No. II.

Babu Ramgati Chakravarty.

Uliara union board.

Ward No. III.

Babu Manada Prosad Banerjee.

Ajodhya union board.

Ward No. I.

Babu Kedar Nath Misra.

Gossainpur union board.

Ward No. I.

Babu Radhagobinda Pal.

Bankadaha union board.

Ward No. V.

Babu Nitai Das Nandi.

Joypur police-station.

Shyamnagar union board.

Ward No. I.

Babu Satish Chandra Goswami.

Hetia union board.

Ward No. III.

Babu Bamapada Chakravarty.

Kuchiakole union board.

Ward No. I.

Babu Nalininath Goswami.

Maynapur union board.

Ward No. I.

Babu Surya Kumar Ghose.

Ward No. IV.

Munshi Shaikh Amin Jamadar.

Kotulpur police-station.

Lawgram union board.

Ward No. II.

Babu Devi Charan Mukherjee.

Kotulpur union board.

Ward No. I.

Babu Barada Prasad Roy.

Ward No. II.

Babu Atul Krishna Bhadra.
Babu Tarapada Nag.

T. C. ROY, *District Magistrate*

Dacca Division—Dacca.

No. 1057J.—2nd March 1935.—Maulvi Abdul Ghafur, No. II, Sub-Deputy Collector, who has been posted to the Dacca Division in Government notification No. 2088A., dated the 27th February 1935, is appointed to be Circle Officer, West Circle, Munshiganj, in the district of Dacca.

No. 1097J. — 5th March 1935. — Babu Upendra Nath Biswas, Sub-Deputy Collector, Bakarganj, is employed on khas mahal work at Khepupara in that district.

No. 1181J.—8th March 1935.—It is hereby notified for general information that, under rule 23 of the manual of rules for the management of charitable hospitals and dispensaries in Bengal, published with Government notification No. 138T.Medl., dated the 7th June 1915, the Naib of Dehi Baherghatta under Bhowal Court of Wards Estate, is appointed to be an *ex-officio* member of the committee for the management of the charitable dispensary at Pawaldia in the district of Dacca, in place of Babu Pramatha Nath Chakraborty, transferred.

W. H. NELSON, *Commissioner.*

Faridpur, the 28th February 1935.

No. 2219J.—It is hereby notified for general information that—

(*a*) Under sub-section (*2*) of section 6 of the Bengal Village Self-Government Act, 1919 (Bengal Act V of 1919), the following gentlemen have been duly elected to be members of the Manikdaha union board in police-station Bhanga of the Sadar subdivision of the Faridpur district:—

Munshi Daliladdin Molla.
Babu Ram Lal Mukherjee.
Babu Tarakeswar Rai.
Babu Sarat Chandra Khan.
Mir Tuzzamal Ali.
Maulvi Gyasuddin.

(*b*) Under sub-section (*3*) of section 6 of the Act, the following gentlemen have been appointed by the District Magistrate of Faridpur to be members of the said union board:—

Munshi Muhammad Baser.
Abdul Majid Jamadar.
Babu Ananda Mohan Mandal.

Faridpur, the 1st March 1935.

No. 2220J.—It is hereby notified for general information that, under section 13 of the Bengal Village Self-Government Act (Act V of 1919), Munshi Abdur Rahman Sarcar has been duly elected to be a member of the Banderkhola union board in police-station Shibchar in the Madaripur subdivision of the Faridpur district, *vice* Munshi Kanai Sarcar, deceased.

A. E. PORTER, *District Magistrate.*

Barisal, the 2nd March 1935.

No. 1405J.—It is hereby notified for general information that Munshi Hashema Ali has been duly elected under section 13 of the Bengal Village Self-Government Act (Act V of 1919) to be a member of the Dumaritola-Sariktola union board within police-station Pirojpur in the Pirojpur subdivision of the Bakarganj district, *vice* Munshi Khueshed Ali Talukdar, deceased.

No. 1406J.—It is hereby notified for general information that Munshi Sultan Saodagar has been duly elected under section 13 of the Bengal Village Self-Government Act (Act V of 1919) to be a member of the Gouripur union board within police-station Bhandaria in the Pirojpur subdivision of the Bakarganj district, *vice* Munshi Montajuddin Sarip, deceased.

No. 1408J.—It is hereby notified for general information that—

(*a*) Under sub-section (*2*) of section 6 of the Bengal Village Self-Government Act, 1919 (Bengal Act V of 1919), the following gentlemen have been duly elected to be members of the undermentioned union boards in the police-stations noted below in the Pirojpur subdivision of the Bakarganj district:—

Pirojpur police-station.

Parerhat union board.

Babu Surja Prasanna Bajpai Chaudhury.
Babu Jajneswar Talukdar.
Babu Kartic Chandra Das.
Munshi Erphanuddin Sikdar.
Munshi Eusuf Molla.
Munshi Apseruddin Talukdar.

Kathalia police-station.

Aurabunia union board.

Munshi Md. Jan Sarip.
Munshi Mujafar Ali Jamadar.
Munshi Tujambar Ali Nakib.
Munshi Yasin Talukdar.
Munshi Sayaduddin Sikdar.
Munshi Meser Ali Sikdar.

Nazirpur police-station.

Malikhali Deulbari-Dobra union board.

Babu Sukhamay Haldar.
Babu Banamali Barai.
Babu Madhab Chandra Roy.
Babu Madhu Sudan Mandal.
Babu Aswini Kumar Gharami.
Babu Naba Kumar Mandal.

East Deulbari-Dobra (Kalardoania) union board.

Babu Girish Chandra Roy.
Babu Hari Charan Majhi.
Babu Tarak Chandra Barai.
Munshi Asanullah.
Munshi Golam Kadar.
Munshi Modassarali Howladar.

(*b*) Under sub-section (*3*) of section 6 of the Act, the following gentlemen have been appointed by the District Magistrate of Bakarganj to be members of the said union boards:—

Pirojpur police-station.

Parerhat union board.

Babu Barada Prasanna Das.
Munshi Naderali Talukdar.
Munshi Mafizar Rahaman.

Kathalia police-station.

Aurabunia union board.

Munshi Khadem Ali Mia.
Babu Nishi Kanta Biswas.
Babu Sita Nath Biswas.

Nazirpur police-station.

Malikhali Deulbari-Dobra union board.

Maulvi Mahammed Esahoque.
Munshi Abdul Karim.
Munshi Sabdu Sheikh.

Nazirpur police-station.

East Deulbari-Dobra (Kalardoania) union board.

Munshi Hassanali Howlader.
Munshi Cherak Ali.
Babu Mangal Krishna Malo.

H. TUFNELL-BARRETT, *District Magistrate.*

Mymensingh, the 6th March 1935.

No. 184C.—It is hereby notified for general information that, under section 6 (*4*) of the Village Self-Government Act, 1919 (Bengal Act V of 1919), the gentleman named below has been duly appointed by the District Magistrate, Mymensingh, to be a member of the following union board:—

Nagarpur police-station.

Louhati union board No. IV.

Basanta Kumar Sarker.

Corrigendum.—No. 185C.—It is hereby notified for general information—

In notification No. 92C., dated the 9th February 1935, published at page 408, Part I of the *Calcutta Gazette*, dated the 21st February 1935, *read* "Suresh Chandra Majumder *for* "Surendra Chandra Majumder" in X—Silimpur union board, police-station Tangail, appointed under sub-section (*2*) of section 6 of the Bengal Village Self-Government Act, 1919 (Bengal Act V of 1919).

Also delete the notification appearing at the top of the right hand column of page 413, Part I of the said notification, beginning with the words "The following voters....." and ending with the name "Basanta Kumar Sarker."

T. M. Dow, *District Magistrate.*

Dacca, the 8th March 1935.

No. 2851M.—It is hereby notified for general information that, under section 13 of the Bengal Village Self-Government Act, V of 1919, Babu Probhat Chandra Karmaker has been appointed to be a member of the Rajabari union board in Sreepur police-station in Sadar (North) subdivision of the district of Dacca, *vice* Dr. Sarada Charan Baishya, L.M.F., resigned.

No. 2852M.—It is hereby notified for general information that, under section 13 of the Bengal Village Self-Government Act, V of 1919, Munshi Amudali has been elected to be a member of the Sreepur union board in Sreepur police-station in Sadar (North) subdivision of the district of Dacca, *vice* Munshi Bandeali Sarker, deceased.

No. 2853M.—It is hereby notified for general information that, under section 13 of the Bengal Village Self-Government Act, V of 1919, Munshi Maniruddin Sarker has been elected to be a member of the Shombhag union board in Dhamrai police-station in Sadar (North) subdivision of the district of Dacca, *vice* Munshi Maniruddin Sarker, removed by district board, under sections 16 (*i*) and (*n*) and 12 (*i*) (*b*) of the Village Self-Government Act.

J. R. BLAIR, *District Magistrate.*

Presidency Division—Calcutta.

No. 537R.G.—2nd March 1935.—Babu Sarashi Mohan Das Gupta, Sub-Deputy Collector and Circle Officer, Sadar, Murshidabad, is transferred to Bongaon, Jessore, as Circle Officer.

No. 543R.G.—2nd March 1935.—Maulvi Enamul Kabir, Sub-Deputy Collector and Circle Officer, Narail, Jessore, is transferred as Circle Officer to the headquarters station of the district of Murshidabad.

No. 549R.G.—2nd March 1935.—Babu Hemanta Kumar Kar, Sub-Deputy Collector and Circle Officer, Bongaon, Jessore, is transferred to Narail in the same district as Circle Officer.

No. 559R.G.—2nd March 1935.—Babu Rajendra Narayan Rakshit, Sub-Deputy Collector, Sadar, Nadia, is transferred to Meherpur in the same district as Second Officer.

No. 565R.G.—2nd March 1935.—Maulvi Muhammad Abdus Sattar, Sub-Deputy Collector, Meherpur, Nadia, is transferred to Diamond Harbour subdivision of the district of 24-Parganas as Circle Officer.

No. 452L.S.-G.—6th March 1935.—The undermentioned gentlemen have been appointed to be members of the managing committee of the Harinavi Charitable Dispensary in the district of the 24-Parganas:—

The Civil Surgeon, 24-Parganas (*ex-officio*).

The Subdivisional Officer, Sadar, 24-Parganas (*ex-officio*).

Babu Nilmani Chakravarti, M.A.

Babu Rajani Kanta Chatterjee.

Babu Tulsi Charan Lahiri, M.A.

Babu Amulya Kumar Nandi.

Babu Surendranath Rai Choudhury.

Babu Kalidhan Bhattacharjee, B.A.

Babu Nirendranath Bhattacharjee, B.A.

Rai Jogesh Chandra Sen Bahadur.

No. 143J.G.—9th March 1935.—It is hereby notified for general information that in exercise of the powers conferred on me by rule 63 (*2*) of the Bengal Jail Code, 1919, Volume I, as revised, I appoint Miss B. E. Guerin of the C. E. Z. Medical Mission to be a non-official lady visitor of the Krishnagar Jail in the district of Nadia for a period of two years with effect from the date of this notification.

No. 147J.G.—9th March 1935.—It is hereby notified for general information that in exercise of the powers conferred on me by rule 691A of the Bengal Jail Code, Volume I, 6th edition, I appoint Pandit Kripa Nath Ghosal to be an honorary teacher for imparting moral instruction to the Hindu prisoners in the Khulna District Jail for a period of two years with effect from the date of this notification.

A. J. DASH, *Commissioner (offg.)*.

Alipore, the 5th March 1935.

No. 24/35-6-V.S.-G.—It is hereby notified for general information that, under section 6 (*2*) of the Bengal Village Self-Government Act, 1919 (Bengal Act V of 1919), the following persons have been duly elected to be members of the Nanghi union board in police-station Budge Budge of Sadar subdivision of the 24-Parganas district:—

Babu Panchanon Bera.

Babu Sailendra Nath Sarkar.

Babu Lalit Mohon Chatarji.

Babu Atul Krishna Pal.

Babu Nagendra Nath Pal.

Munshi Shaikh Khater Ali.

No. 24/35-7-V.S.-G.—It is hereby notified for general information that, under section 6 (*3*) of the Bengal Village Self-Government Act, 1919 (Bengal Act V of 1919), the following persons have been appointed as members of the Nanghi union board in police-station Budge Budge of Sadar subdivision of the 24-Parganas district:—

Babu Krishna Chandra Sarkar.
Babu Paban Chandra Samanta.
Munshi Shaikh Safizuddin.

No. 24/35-8-V.S.-G.—It is hereby notified for general information that, under section 6 (*2*) of the Bengal Village Self-Government Act, 1919 (Bengal Act V of 1919), the following persons have been duly elected to be members of the Mahestola and Ganipur union boards in police-station Mahestola of Sadar subdivision of the 24-Parganas district:—

Mahestola union board.

Ward No. I.

Munshi Abul Hossain Haldar.
Munshi Joynal Abedin Mufti.
Babu Narain Chandra Banarji.

Ward No. II.

Babu Phani Bhusan Chatarji.
Babu Jatindra Nath Banarji.
Babu Anumati Naskar.

Ganipur union board.

Ward No. I.

Babu Hari Charan Mandal.
Babu Jyotindra Nath Haldar.
Babu Beni Madhab Mandal.

Ward No. II.

Khan Sahib Maulvi Wachel Mollah.
Munshi Mozaffer Hossain.
Munshi Soleman Thandar.

No. 24/35-9-V.S.-G.—It is hereby notified for general information that, under section 6 (*3*) of the Bengal Village Self-Government Act, 1919 (Bengal Act V of 1919), the following persons have been appointed as members of the Mahestola and Ganipur union boards in police-station Mahestola of Sadar subdivision of the 24-Parganas district:—

Mahestola union board.

Munshi Kader Bux Mollah.
Babu Behari Lall Ghosh.
Babu Purno Chandra Sardar.

Ganipur union board.

Munshi Badur Raschid.
Haji Ainal Bux.
Babu Purno Chandra Mandal.

S. N. RAY, *Addl. District Magistrate.*

Krishnagar, the 8th March 1935.

No. 1033L.S.-G.—It is hereby notified for general information that, under sub-section (3) of section 6 of the Bengal Village Self-Government Act, 1919 (Bengal Act V of 1919), the following gentlemen have been appointed to be members of the Debagram union board in police-station Kaliganj in the Sadar sub-division of the Nadia district:—

Babu Fakir Chandra Patra.

Babu Jitendriya Chandra Mukerjee.

Babu Sarat Chandra Mukherjee.

No. 1034L.S.-G.—It is hereby notified for general information that, under sub-section (2) of section 6 of the Bengal Village Self-Government Act, 1919 (Bengal Act V of 1919), the following gentlemen have been duly elected to be members of the Debagram union board in police-station Kaliganj in the Sadar subdivision of the Nadia district:—

Babu Balaram Gorai.

Munshi Noor Muhammad Biswas.

Munshi Akbari Molla.

Munshi Jendar Mondal.

Munshi Jaber Ali Molla.

Babu Anath Nath Mukerjee.

No. 1037L.S.-G.—It is hereby notified for general information that, under section 13 of the Bengal Village Self-Government Act, 1919 (Bengal Act V of 1919), read with rule 36 of the rules, for the election and appointment of members, etc., of union boards under the said Act, Babu Kali Kinkar Mukherjee has been appointed to be a member of the Billogram-Kasiadanga union board within the Nakasipara police-station in the Sadar subdivision of the Nadia district, in place of Babu Sailesh Chandra Chatterjee, deceased.

S. DUTT, *District Magistrate.*

Orders by the Deputy Inspector-General of Police, Presidency Range.

Calcutta.—No. 1337-38.—2nd March 1935.—Babu Phani Bhushan Gupta, officiating Inspector, E. B. Railway Police, Sealdah, is transferred to Nadia, *vice* Babu Haridas Sarkar officiating Inspector, reverted to his substantive rank.

The transfer is effected in the interests of public service.

Babu Gyanendra Nath Datta, Inspector, E. B. Railway Police, Sealdah, is granted 4 months' leave on average pay, under rule 81 (*b*) (*ii*) of the Fundamental Rules, with effect from the 1st March 1935.

Sub-Inspector Shaikh Imad Husain of the E. B. Railway Police, Sealdah, is appointed to act as Inspector in the vacancy.

L. H. BURTON,

Deputy Inspector-General of Police.

Rajshahi Division—Jalpaiguri.

No. 800J.—8th March 1935.—Under the provisions of rule 63 (2) of Chapter IV of the Bengal Jail Code, I hereby appoint Miss Sulata Bose to be a non-official lady visitor of the Rajshahi Central Jail for a period of two years.

No. 804J.—8th March 1935.—Under the provisions of rule 691A, Chapter XVII of the Bengal Jail Code, I appoint Maulvi Md. Abdul Hamid to be honorary teacher of the Pabna Jail for a period of two years.

F. W. ROBERTSON, *Commissioner.*

Malda, the 5th March 1935.

No. 2L.S.-G.—It is hereby notified for general information that, under section 13 of the Bengal Village Self-Government Act, 1919 (Bengal Act V of 1919), Babu Jatindra Mohan Choudhury has been appointed to be a member of the Jalalpur union board in police-station Kaliachak in the district of Malda, *vice* Debendranath Choudhury, deceased.

No. 3L.S.-G.—It is hereby notified for general information that, under section 13 of the Bengal Village Self-Government Act, 1919 (Bengal Act V of 1919), Munshi Nuruddin Mia has been appointed to be a member of the Mothabari union board in police-station Kaliachak in the district of Malda, *vice* Mohini Kanta Mandal, deceased.

K. C. BASAK, *District Magistrate.*

Rajshahi, the 7th March 1935.

No. 3132J.—It is hereby notified for general information that, under section 13 of the Bengal Village Self-Government Act, 1919 (Bengal Act V of 1919), read with rule 35 of the rules for the election and appointment of members of union boards, etc., Munshi Umed Ali Shaik has been duly elected to be a member for ward No. 2 of the Paba union board in Paba police-station in the Sadar subdivision of the district of Rajshahi, *vice* Munshi Atahar Ali Mondal, deceased.

W. H. S. SMITH, for *District Magistrate.*

Registered No. C207

The Calcutta Gazette

THURSDAY, MARCH 14, 1935.

PART IA

Orders and Notifications by the Government of India republished for general information.

FINANCE DEPARTMENT.

NOTIFICATIONS.

New Delhi, the 18th February 1935.

No. D/2241-F.—In exercise of the powers conferred by section 24 of the Indian Securities Act, 1920 (X of 1920), and in supersession of the Indian Securities Rules, 1920, the Governor General in Council is pleased to make the following rules, the same having been previously published as required by sub-section (1) of the said section, namely:—

1. *Short title and application.*—(1) These rules may be called the Indian Securities Rules, 1935. They shall come into force on the 1st April 1935.

(2) They shall apply only in the case of securities issued by the Governor General in Council.

2. *Definitions.*—In these rules, unless there is anything repugnant in the subject or context,—

(*a*) "the Act" means the Indian Securities Act, 1920; X of 1920.

(*b*) "Controller of the Currency" includes any officer who may be appointed from time to time by the Governor General in Council to perform the duties of the Controller of the Currency;

(*c*) "District Magistrate" has the same meaning as in the explanation to sub-section (*2*) of section 13 of the Act;

(*d*) "Form" means a Form as set out in the Schedule to these rules;

(*e*) "proper demand" means a demand made in writing to the Public Debt Office in accordance with the provisions of these rules; and

(*f*) "Public Debt Office" means the office of the Reserve Bank of India on the books of which a Government security is registered.

Rules relating to Stock.

3. *Payment of interest.*—Interest on stock shall be paid on warrants issued by the Public Debt Office and payable at the local office of the Reserve Bank of India. Such warrants may, at the request of the holder

of the stock certificate, to be preferred in writing to the Public Debt Office, be made payable at any other Indian office of the Reserve Bank of India or any agency thereof conducting Government treasury business or at any treasury or sub-treasury in British India, or, in a State in India, at the Head Post Office, if there is no British Indian treasury, or, if there is no Head Post Office, at any Post Office designated by the Governor General in Council by order in writing in this behalf. The presentation of the stock certificate shall not be required at the time of payment of interest, but the payee shall acknowledge receipt on the back of the warrant.

4. *Issue of duplicate certificate in case of loss, theft or destruction of original.*—A duplicate stock certificate may be issued by the Public Debt Office on its being satisfied that the original certificate has been actually lost, stolen or destroyed.

5. *Procedure for conversion, etc.*—Subject to any general or special instructions of the Controller of the Currency, the Public Debt Office, may, on the application of the holder of the relevant stock certificate or stock certificates, and on his receipting the same in Form I, II or III, as the case may be, issue converted, consolidated or sub-divided securities in place thereof.

6. *Recognition of trusts, etc.*—(1) On a proper demand made by a person in whose name any stock is registered, or by a person into whose name any stock is to be transferred, or by a person who desires to be entered as the proprietor of stock in exchange for promissory notes or bearer bonds held by him, that he may be described in the books of the Public Debt Office with respect to that stock as a trustee, whether as a trustee of the trust specified in the demand or as a trustee without any such qualification, the Public Debt Office may make such entries in its books and in any stock certificate issued in connection therewith as it considers reasonably necessary for the purpose of complying with the demand.

(2) If the demand is made by a person in whose name stock is registered or by a person into whose name stock is to be transferred, the stock certificate must be transmitted to the Public Debt Office with the demand.

(3) Where any transfer-deed, power-of-attorney or other document purporting to be executed by a stock-holder described in the books of the Public Debt Office as a trustee is produced to the Public Debt Office, the Public Debt Office shall not be concerned to inquire whether the stock-holder is entitled under the terms of the trust to give any such power or to execute such deed or other document, and may act on the transfer-deed, power-of-attorney or document in the same manner as though the stock-holder had not been so described, and whether the stock-holder is or is not described in the transfer-deed, power-of-attorney or document as a trustee, and whether he does or does not purport to execute the transfer-deed, power-of-attorney or document in his capacity as a trustee.

7. *Recognition of office-holders.*—(1) On a proper demand made by a person who is the holder of an office other than a public office, the Public Debt Office may, in the case of any account of Government stock to be opened and kept with such person, either alone or jointly with other persons, enter the description of such person in its books by the name of his office.

(2) Where any person holding any Government stock, whether alone or jointly with other persons, is the holder of any office other than a public office, the Public Debt Office may, on a proper demand made by that person, or in the case of a joint account, by all the stock-holders, close the existing account and open an account with respect to that stock, or alter the existing account, so that it shall become an account under the official description of that person, either alone or jointly with the other stock-holders, according to the terms of the demand, and make such entries in its books as it considers reasonably necessary for the purpose of complying with the demand.

(3) Where accounts have been opened and entries made in accordance with sub-rule (1) or sub-rule (2), the personal name of the office-holder need not be stated in the accounts, and any document relating to the stock concerned may be executed by the person for the time being holding the office described in the account as if his personal name were so stated.

(4) Before acting on any demand purporting to be made, or on any document purporting to be executed, in pursuance of this rule by a person as being the holder of any office, the Public Debt Office may require the production of evidence that such person is the holder for the time being of that office.

8. *Receipt required on discharge of a stock certificate.*—When a stock certificate is presented for discharge, a receipt shall be taken on the certificate itself or a separate receipt shall be given by the party presenting it.

Rules relating to Promissory Notes.

(*a*) *Rules relating to Promissory Notes other than Treasury Bills.*

9. *Payment of interest.*—Interest on a Government promissory note shall be paid at any treasury or sub-treasury for payment of interest at which the note has been enfaced, but only on presentation of the note itself and on signature by the payee of a receipt in Form IV. Where, however, interest on a Government promissory note is payable at a place where a Public Debt Office is located, the note shall be presented at that Public Debt Office which shall issue interest warrants in favour of the holder payable at the local office of the Reserve Bank of India.

10. *When receipt for renewal may be required.*—The holder of any such note may be required to receipt the same for renewal in any of the following cases, and, where such requisition has been made, payment of any further interest on such note may be refused until the note is receipted for renewal and actually renewed, namely:—

(*a*) if only sufficient room remains on the back of the note for one further indorsement or if any word is written upon the note across any existing indorsement or indorsements;

(*b*) if the note is torn or in any way damaged or crowded with writing or unfit, in the opinion of the officer before whom it is produced for payment of interest or for receiving indorsement;

(*c*) if any indorsement is not clear and distinct or does not indicate the payee or payees, as the case may be, by name or in the case of office-holders, by office, or is made otherwise than in one of the indorsement cages on the back of the note;

(*d*) if the interest on the note has remained undrawn for ten years or more;

(*e*) if the interest cages on the reverse of the note have been completely filled or if the vacant printed cages on the reverse of the note do not correspond with the half-years for which interest has become due on the date when the note is presented for drawal of interest;

(*f*) if the note having been enfaced three times for payment of interest is presented for re-enfacement; and

(*g*) if, in the opinion of the Public Debt Office, the title of the person presenting the note for payment of interest is irregular or not fully proved.

11. *Report to the Public Debt Office of loss, theft or destruction of promissory note.*—(1) Every application for the issue of a duplicate note in place of a Government promissory note which is alleged to have been lost, stolen or destroyed, either wholly or in part, shall be addressed to the Public Debt Office, and shall be accompanied by a statement of the following particulars, namely:—

(*a*) particulars of the note according to the following form:—

promissory note for Rs. , No.
of the per cent. loan of

(*b*) the last half-year for which interest has been paid;

(*c*) the person to whom such interest was paid;

(*d*) the person in whose name the note was issued (if known);

(*e*) particulars of coupons attached (if any);

(*f*) the place for payment of interest at which the note was for the time being enfaced;

(*g*) the circumstances attending the loss, theft or destruction; and

(*h*) whether the loss or theft was reported to the police.

(2) Such letter shall be accompanied by—

(*a*) the Post Office registration receipt for the letter containing the note, if the same was lost in transmission by registered post;

(*b*) a copy of the police report, if the loss or theft was reported to the police;

(*c*) where the last payment of interest was not made by a warrant issued by the Public Debt Office, a letter signed by the officer of the treasury where interest was last paid, certifying the last payment of interest on the note and stating the name of the party to whom such payment was made;

(*d*) if the applicant is not the registered holder, an affidavit sworn before a Magistrate testifying that the applicant was the last legal holder of the promissory note, and all documentary evidence necessary to trace back the title to the registered holder; and

(*e*) any portions or fragments which may remain of the lost, stolen or destroyed note.

(3) A duplicate of the letter to the Public Debt Office, but not of its enclosures, shall also be sent to the treasury where interest is payable.

12. *Notification in* Gazette.—The loss, theft or destruction of a Government promissory note or portion of a Government promissory note shall be further notified by the applicant in three successive issues of the *Gazette of India* and of the local official *Gazette*, if any, of the place where the loss, theft or destruction occurred. Such notification shall be in the form following, or as nearly in such form as circumstances permit:—

"Lost" ("stolen" or "destroyed" as the case may be)

"The Government promissory note No. of the per cent. loan of for Rs. , originally standing in the name of , and last indorsed to , the proprietor, by whom it was never indorsed to any other person, having been lost/stolen/destroyed, notice is hereby given that payment of the above note and the interest thereupon has been stopped at the Public Debt Office, and that application is about to be made for the issue of a duplicate in favour of the proprietor. The public are cautioned against purchasing or otherwise dealing with the above-mentioned security.

Name of person notifying.

Residence."

13. *Issue of duplicate note and taking of indemnity.*—After the publication of the last notification prescribed in Rule 12, the Controller of the Currency shall, if he is satisfied of the loss, theft or destruction of the note and of the justice of the claim of the applicant, cause the particulars of the note to be included in a list such as is referred to in sub-section (3) of section 10 of the Act, and shall order the Public Debt Office—

(1) if only a portion of the note has been lost, stolen or destroyed, and if a portion of the note sufficient for its identification has been produced, to issue to the applicant, on the execution of an indemnity bond such as is hereinafter mentioned, a duplicate note in place of that of which a portion has been so lost, stolen or destroyed, six months after the date of the publication of the said list, and

(2) if no portion or no sufficient portion of the note so lost, stolen or destroyed has been produced—

(*a*) to pay to the applicant, two years after the publication of the said list, and on the execution of an indemnity bond in the manner hereinafter prescribed, the interest in respect of the note so lost, stolen or destroyed pending the issue of a duplicate note, and

(*b*) to issue to the applicant a duplicate note in place of the note so lost, stolen or destroyed six years after the date of publication of the said list; provided that—

(i) if the date on which the note is due for repayment falls earlier than the date on which the said period of six years expires, the Controller of the Currency shall, within six weeks of the former date, invest the principal amount due on the note in the Post Office Savings Bank unless, before the expiry of such period, the applicant has made a specific request for the investment of the amount in securities of any of the current rupee loans of the Government of India maturing not earlier than the date on which the duplicate is due for issue, and in that case, shall invest the amount in such securities, and deposit the balance, if any, left after such investment in the Post Office Savings Bank. He shall repay the amount invested in the Post Office Savings Bank, together with any interest which may have accrued thereon and, if any investment has been made in Government securities, shall deliver such securities, together with the interest accrued thereon, to the applicant at the time when a duplicate note would otherwise have been issued, and

(ii) if at any time before the issue of the duplicate note the original note is discovered or it appears to the Public Debt Office for other reasons that the order should be rescinded, the matter shall be referred to the Controller of the Currency for further consideration and in the meantime all action on the order shall be suspended.

14. *Alteration of order, etc.*—A provisional order passed under sub-rule (2) of Rule 13 shall, on the expiry of the six years referred to therein become final; provided that the Controller of the Currency may, at any time prior to the issue of a duplicate note, if he finds sufficient reason, alter or cancel any such order, and may also direct that the interval before the issue of a duplicate note shall be extended by such period not exceeding six years, as he may think fit.

15. *Indemnity bonds.*—(1) Indemnity bonds—

(*a*) when executed under sub-rule (2) (*a*) of Rule 13 shall be for twice the amount of the interest involved, that is to say, twice the amount of all back interest accrued due on the note *plus* twice the amount of all interest to accrue due thereon during the period which will have to elapse before the issue of a duplicate note can be made, and

(*b*) in all other cases shall be for twice the face value of the note *plus* twice the amount of interest calculated in accordance with clause (*a*).

(2) The Controller of the Currency may direct that such indemnity bond shall be executed by the applicant alone or by the applicant and one or two sureties as he may think fit, or that in lieu of furnishing personal sureties the applicant shall furnish collateral security in the shape of Government securities to be deposited with him for such amount and period as he may think fit.

(*b*) *Rules relating to Treasury Bills.*

16. *Report of the loss, theft or destruction of treasury bill.*—(1) Every application regarding a treasury bill alleged to have been lost, stolen or destroyed, either wholly or in part, shall be addressed to the office or agency of the Reserve Bank of India which issued it, and shall be accompanied by a registration fee of Re. 1 per treasury bill and a statement of the following particulars, namely:—

(i) particulars of the number and value of the treasury bill;

(ii) the circumstances attending the loss, theft or destruction; and

(iii) whether the loss or theft was reported to the police.

(2) The application shall be accompanied by—

(*a*) the Post Office registration receipt for the letter containing the treasury bill, if lost in transmission by post;

(*b*) a copy of the police report, if the loss or theft was reported to the police;

(*c*) an affidavit sworn before a magistrate testifying that the claimant was the last legal holder of the treasury bill; and

(*d*) any portions or fragments which may remain of the lost, stolen or destroyed treasury bill.

17. *Notification in* Gazette.—The loss, theft or destruction of a treasury bill shall be further notified by the applicant in one issue each of the *Gazette of India* and of the local official *Gazette*, if any, of the place where the loss, theft or destruction occurred. Such notification should be in the form following, or as nearly in such form as circumstances permit:—

"Lost" ("stolen" or "destroyed" as the case may be)

"The Treasury Bill No. for Rs. , issued on and maturing after a period of months, having been lost/stolen/destroyed, notice is hereby given that application is about to be made for payment of the value of the said Treasury Bill in favour of the undersigned.

Name of person notifying.

Residence."

18. *Payment of amount due.*—(1) After the publication of the notifications prescribed in Rule 17, the Controller of the Currency shall, if he is satisfied of the loss, theft or destruction of the treasury bill, and of the justice of the claim of the applicant, cause the particulars of the treasury bill to be included in a list such as is referred to in sub-section (3) of section 10 of the Act, and may authorise the office of issue to pay immediately, or, if the bill has not matured in the meanwhile, on the date of its maturity, the value of the bill to the applicant on the execution of an indemnity bond such as is hereinafter mentioned, provided that, if for any reason the Controller of the Currency holds that payment of the value of the treasury bill as above would involve risk of loss to Government, he may withhold payment thereof, and in that case shall, within six weeks of the date of his decision to withhold payment or of the date of maturity of the treasury bill alleged to have been lost, stolen or destroyed, whichever date is later, invest the amount of the treasury bill in the Post Office Savings Bank unless, before the expiry of such period, the applicant has made a specific request for the investment of the amount in securities of any of the current rupee loans of the Government of India maturing not earlier than the date on which the amount is due for payment, and in that case the Controller of the Currency shall invest the amount in such securities and deposit the balance, if any, left after such investment in the Post Office Savings Bank. He shall repay the amount invested in the Post Office Savings Bank, together with any interest which may have accrued thereon and, if any investment has been made in Government securities, shall deliver such securities, together with the interest accrued thereon, to the applicant on the expiry of six years from the date of publication in the list mentioned above.

(2) The indemnity bond referred to in sub-rule (1) above shall be for twice the value of the treasury bill. The Controller of the Currency may direct that such indemnity bond shall be executed by the applicant alone or by the applicant and one or two sureties or that in lieu of furnishing sureties the applicant shall deposit with him collateral security in the shape of Government securities for such amount and period as he may think fit.

(*c*) *General.*

19. *Publication of list.*—(1) The list referred to in rules 13 and 18 (1) shall be published half-yearly in the *Gazette of India* in the months of January and July, or as soon afterwards as may be convenient.

(2) All Government promissory notes and treasury bills in respect of which an order has been passed under Rule 13 or Rule 18 (1), as the case may be, shall be included in the first list published next after the passing of such order and thereafter such notes and treasury bills shall continue to be included in every succeeding list until the expiration of six years from the date of first publication.

(3) The list shall contain the following particulars regarding each note (other than a treasury bill) included therein, namely, the name of the loan, the number of the note, its value, the name of the person to whom it was issued, the date from which it bears interest, the name of the applicant for a duplicate, the number and date of the order passed by the Controller of the Currency for payment of interest or issue of a duplicate, and the date of publication of the list in which the note was first included and similar particulars shall, as far as possible, be given regarding each treasury bill included in the list.

20. *Form of receipt for renewal, consolidation, etc.*—(1) Subject to any general or special instructions of the Controller of the Currency, the Public Debt Office may, on the application of the holder,

(*a*) renew, sub-divide or consolidate a Government promissory note or notes (not being a treasury bill or treasury bills), provided that the note or notes has or have been receipted in Form V, VII or VIII, as the case may be, or

(*b*) convert the note or notes into a stock certificate, provided that the note or notes has or have been indorsed, "Pay to the Governor General of India in Council," or

(*c*) convert the note or notes into bearer bonds provided that the note or notes has or have been indorsed in Form IX.

(2) Subject to any general or special instructions of the Controller of the Currency, the office or agency of the Reserve Bank of India which issued a treasury bill may, on the application of the holder thereof renew it provided that the treasury bill has been receipted in Form VI.

21. *Proviso for renewal of promissory notes held by managing member of Hindu joint family subject to* Mitakshara *Law.*—The certificate required under the proviso to section 12 of the Act shall be a certificate signed by the Distict Magistrate after such inquiry (if any) as may in his opinion be necessary to determine the matters in question referred to therein.

22. *Prescribed officer in case of dispute as to title.*—(1) The Controller of the Currency shall exercise the powers and perform the duties referred to in section 13 of the Act.

(2) Any declaration made under clause (*c*) of sub-section (1) of that section shall be published in three successive issues of the *Gazette of India* and the local official *Gazette*, as soon as possible after the date on which the declaration is made.

23. *Receipt required on discharge of a promissory note.*—When a promissory note is presented for discharge, a receipt shall be taken on the note itself.

Rules relating to Bearer Bonds.

24. *Payment of interest.*—Interest on a bearer bond shall be paid to any person who presents the coupon entitling him to such interest at the Public Debt Office or the treasury at which the bond is registered for payment of interest.

25. *Report to the Public Debt Office of loss, theft or destruction of bearer bond.*—(1) Every application for the issue of a duplicate bond in place of a bearer bond which is, or the coupons of which are, alleged to have been lost, stolen or destroyed or which is alleged to have been lost, stolen or destroyed together with its coupons, shall be addressed to the Public Debt Office, and shall be accompanied by a registration fee of Re. 1 per bond and a statement of the following particulars, namely:—

(1) particulars of the number and value of the bearer bond and the loan to which it belongs;
(2) particulars of coupons alleged to have been lost or in the possession of the claimant, as the case may be;
(3) the name of the Public Debt Office or treasury at which the bond has been registered for payment of interest;
(4) the circumstances attending the loss, theft or destruction; and
(5) whether the loss or theft was reported to the police.

(2) Such letter shall be accompanied by—

(*a*) the Post Office registration receipt for the letter containing the bearer bond or coupons, or both, if lost in transmission by registered post;

(*b*) a copy of the police report, if the loss or theft was reported to the police;

(*c*) where the last payment of a coupon with regard to the bond was not made by the Public Debt Office, a letter signed by the officer of the treasury at which interest was last paid, certifying the last payment of such coupon;

(*d*) an affidavit sworn before a Magistrate testifying that the applicant was the last legal holder of the bearer bond; and

(*e*) any portions or fragments which may remain of the lost, stolen or destroyed bearer bond or coupons, or both.

(3) A duplicate of the letter to the Public Debt Office, but not of its enclosures, shall also be sent to the treasury at which the bond is registered for payment of coupons.

26. *Notification in* Gazette.—The loss, theft or destruction of a bearer bond or coupons, or both, shall be further notified by the applicant in three successive issues of the *Gazette of India* and of the local official *Gazette*, if any, of the place where the loss, theft or destruction occurred.

Such notification shall be in the form following or as nearly in such form as circumstances permit:—

"Lost" ("stolen" or "destroyed" as the case may be).

"The $\frac{\text{bearer bond No.}}{\text{coupons relating to bearer bond No.}}$ of the per cent. loan $\frac{\text{(together with coupons or without coupons (for Rs.}}{\text{for Rs.}}$ having been lost/stolen/destroyed, notice is hereby given that application is about to be made to the Public Debt Office for the issue of a duplicate in favour of the undersigned.

Name of person notifying.

Residence."

27. *Issue of duplicate on indemnity when bond only lost, stolen or destroyed.*—Where a bearer bond is reported to be lost, stolen or destroyed, and the coupons are in the possession of the person claiming to be the owner of the bond and coupons, the Controller of the Currency shall, on the expiry of six months from the date of the last notification prescribed in rule 26, if satisfied that the bond has been lost, stolen or destroyed, cause the particulars of the bond so lost, stolen or destroyed to be included in a list such as is referred to in sub-section (3) of section 10 of the Act, and shall order the Public Debt Office to issue to the applicant a duplicate bond with coupons and to pay the amount of any coupons which may be due on the execution of an indemnity bond taken for twice the value of the bond lost, stolen or destroyed and on the surrender of the unpaid coupons of the original bond.

28. *Issue of duplicate on indemnity when both bond and coupons lost, stolen or destroyed.*—Where both a bearer bond and its coupons are reported to be lost, stolen or destroyed, the Controller of the Currency, shall on the expiry of two years from the date of the last notification prescribed in rule 26 if *primâ facie* grounds exist for believing that the bond and coupons have been lost, stolen or destroyed, and that the claim of the applicant is just, cause the particulars of the bond and coupons so lost, stolen or destroyed to be included in a list such as is referred to in sub-section (3) of section 10 of the Act, and shall pass a provisional order requiring the Public Debt Office, on the expiry of six years from the date of publication, as hereinafter provided, of the list in which the lost, stolen or destroyed bond and coupons are first included and on the execution of an indemnity bond taken for twice the value of the bond and twice the value of the coupons due for payment,

and unless reasons to the contrary appear (in which case the matter shall be referred back to the Controller of the Currency)—

(*a*) to issue to the applicant a duplicate bond with coupons, and

(*b*) to pay the amount of any coupon which may be due:

Provided that, if the date on which the bearer bond is due for repayment falls earlier than the date on which the period of six years prescribed in this rule expires, the Controller of the Currency shall, within six weeks of the former date, invest the amount of the bond in the Post Office Savings Bank, and shall repay this amount, together with any interest which may have accrued thereon in such Bank, to the applicant at the time when a duplicate bond would otherwise have been issued.

29. *Issue of duplicate on indemnity when coupons only lost, stolen or destroyed.*—Where the coupons only of a bearer bond are reported to be lost, stolen or destroyed, the Controller of the Currency shall, on the expiry of two years from the date of the last notification prescribed in rule 26, if *primâ facie* grounds exist for believing that the coupons have been lost, stolen or destroyed, and that the claim of the applicant is just, cause the particulars of the coupons so lost, stolen or destroyed to be included in a list such as is referred to in sub-section (3) of section 10 of the Act, and shall pass a provisional order requiring the Public Debt Office, on the expiry of six years from the date of publication, as hereinafter provided, of the list in which the lost, stolen or destroyed coupons are first included and on the execution of an indemnity bond taken for twice the value of the coupons due for payment and unless reasons to the contrary appear (in which case the matter shall be referred back to the Controller of the Currency)—

(*a*) to issue to the applicant a duplicate bond with coupons, and

(*b*) to pay the amount of any coupons which may be due.

30. A provisional order passed under rule 28 or rule 29 shall, on the expiry of the six years referred to in these rules, become final:

Alteration of order, etc.—Provided that the Controller of the Currency may at any time prior to the issue of a duplicate bond, if he finds sufficient reasons, alter or cancel any such order and may also direct that the interval before the issue of a duplicate bond shall be extended by such period, not exceeding six years, as he thinks fit.

31. *Indemnity bonds.*—In making any order under rule 27, 28 or 29 the Controller of the Currency may direct that the indemnity bond be executed by the applicant alone or by the applicant and two sureties as the Controller of the Currency may think fit.

32. *Publication of list.*—(1) The list referred to in rules 27, 28 and 29 shall be published half-yearly in the *Gazette of India* in the months of January and July, or as soon afterwards as may be convenient.

(2) All bearer bonds and coupons in respect of which an order has been passed under any of those rules shall be included in the first list published next after the passing of such order and in every succeeding list until the expiry of six years from the date of first publication or from the date of the last payment of a coupon, whichever is the later date.

(3) The list shall contain the following particulars in the case of each bond included therein, namely, the name of the loan, the number of the lost bearer bond, its value, the dividend numbers and dates of the lost coupons, if any, the name of the applicant for a duplicate, and the date of publication of the list in which the bond was first included.

33. *Prescribed officer for renewal, conversion, etc.*—Subject to any general or special instructions of the Controller of the Currency, the Public Debt Office may, on the application of the holder, renew, convert, sub-divide or consolidate a bearer bond or bearer bonds.

34. *Receipt not required on discharge, etc., of a bearer bond.*—When a bearer bond is presented for discharge, renewal, conversion, sub-division or consolidation, no receipt shall be required.

General.

35. *Fees.*—The following fees shall be paid in respect of applications under sections 10, 12 and 15 of the Act, namely:—

For each renewed, converted, consolidated, sub-divided or duplicate security, 4 annas per cent. if the new security does not exceed in amount Rs. 400, and Re. 1 if the new security exceeds that sum:

Provided that no fee shall be payable—

(*a*) in respect of the conversion of a Government promissory note or a bearer bond into stock certificate, and,

(*b*) in respect of the renewal of a note which bears no indorsement other than an indorsement by the Reserve Bank of India, the Imperial Bank of India (or one of the banks constituted by the Presidency Banks Act, 1876), the Controller of the Currency, his Deputy or Assistant, or an Accountant General, his Deputy or Assistant, or an Assistant Accounts Officer, Posts and Telegraphs, and the renewal indorsement, when such renewal is required only on account of there being no further space on the note in which to record payment or enfacement for payment of interest.

36. *Indemnity bonds.*—An indemnity bond taken on the issue of a renewed, converted, consolidated or sub-divided security shall be, as nearly as may be, in Form X. It shall be for twice the amount of the security or securities, as the case may be, and shall be executed by the applicant alone or by the applicant and one or two sureties, as may be directed. The applicant may also be allowed to deposit, for such amount and period as may be considered fit, collateral security in the shape of Government securities instead of furnishing personal sureties.

Special procedure in certain cases.

37. *Government securities held by minor or lunatic.*—(1) When a Government security stands in the name of or is held by a minor or a lunatic who is incapable of managing his affairs, interest or the capital sum payable on the maturity of the loan may, where, in the case of interest payable, the nominal value of the security, or in other cases the sum payable, does not exceed five thousand rupees, be paid to the father or, if he be dead, to the mother of such person on the officer making the payment being satisfied as to the identity of the father, or mother, as the case may be.

(2) If such payment be made at a place other than that at which such minor or lunatic and his father or mother ordinarily reside, payment may be made on production of a certificate of identity signed by any Magistrate.

(3) When an applicant for payment is neither the father nor the mother of the minor or lunatic, and when the value of the securities standing in the name of such person does not exceed five thousand rupees, payment may be made on production of a certificate by the District Magistrate, to the effect that the applicant is the actual guardian of such person.

(4) If the value of the securities standing in the name of a minor or lunatic exceeds five thousand rupees, payment shall not be made unless and until the applicant for payment shall have produced evidence to the satisfaction of the officer making payment that he is the legal guardian of such person.

38. *Small holdings of deceased persons.*—(1) The Controller of the Currency shall exercise the powers and perform the duties referred to in section 19 of the Act.

(2) In the case of securities held on account of a deceased depositor in the Post Office Savings Bank and kept in the safe custody of the Accountant General, Posts and Telegraphs, the powers and duties referred to in section 19 of the Act shall be exercised by any Postmaster-General, Deputy Postmaster-General or Director of Posts and Telegraphs.

39. *When maker of a document is unable to write.*—(1) If any person by whom any document relating to a Government security is to be executed, or by whom an indorsement is to be made on a promissory note, satisfies a Magistrate that he is for any reason unable to write, and that the effect of the document or indorsement is fully understood by him, and that he is the person whom he represents himself to be, such Magistrate may, at the request of that person and subject to the provisions of this rule, execute the document or sign the indorsement on his behalf.

(2) Where any such document is to be executed or indorsement signed by a Magistrate under this rule on behalf of any person, the Magistrate shall execute the document or sign the indorsement in the

presence of that person, and shall enter below his own signature a certificate to the effect that the document was executed, or the indorsement signed, as the case may be, at the requset of that person after having been previously read over to the latter, and that he is satisfied that the effect of the document or indorsement is fully understood by such person.

40. *Special securities issued to Ruling Princes.*—(1) Government securities may be issued to the ruler of a State in India, at his request in Form XI, provided that—

(*a*) the ruler has been admitted to this privilege by order of the Governor General in Council, and

(*b*) the total amount for which the ruler applies is not less than Rs. 50,000.

(2) Notes issued in accordance with sub-rule (1) shall be in the name of the ruler and his successors and property in them, save as otherwise provided, shall devolve by succession.

(3) Any such note may be negotiated by indorsement by the ruler of the State for the time being.

(4) The transferee of any such note shall not be capable of negotiating or drawing interest on the same when so transferred, but shall be entitled on surrender to the Public Debt Office of the note or notes so transferred to obtain therefrom Government securities of a like denomination and amount.

41. *Application for information.*—(1) Any person requiring information regarding a Government security in the custody of the Public Debt Office may apply to that office in writing, stating the form in which the information is required.

(2) Every such application shall state with precision the particulars (namely, the number, rate of interest, loan to which it belongs and the face value) of the security and shall contain a statement of the purpose for which the information is required and of the interest of the applicant in the security. If any of the above particulars are not known to the applicant, the Controller of the Currency may, on application being made to him, direct the Public Debt Office, at his discretion, to supply the required particular or particulars, if available, to the applicant, subject to such conditions and on payment of such fees, if any, as he may prescribe.

42. *Disposal of application.*—The following provisions shall be observed in dealing with applications under rule 41:—

(1) If the application relates to a security which has been renewed, converted, consolidated or sub-divided or asks for inspection from any register or book kept or maintained in the Public Debt Office, the application shall be refused.

(2) If the application asks for inspection of a security which has been cancelled on payment of the amount due in respect thereof, it shall be referred to, and disposed of under the orders of, the Controller of the Currency.

(3) In any other case the Public Debt Office may, subject to the provisions hereinafter contained, grant a certified copy of any indorsement on a security or of any entry in any register or book maintained by that office relating to any security, on being satisfied that the security in question has stood in the name of the applicant or of a person in whom the applicant has a representative interest, and further that the applicant has a *bonâ fide* interest in the security in respect of which the application is made:

Provided that if the security has been cancelled on payment of the amount due in respect thereof, no copy of any indorsement thereon shall be granted which purports to give a title subsequent to the termination of the applicant's interest in the security.

(4) The Public Debt Office may, under a special order of the Controller of the Currency, supply any information regarding a security referred to in clause (3) which is directed to be supplied by such an order.

43. *Fees.*—(1) Every applicant shall before any information is supplied to him under rule 41 or rule 42 pay a fee of Re. 1 for each security in respect of which any information is supplied and shall execute a bond of indemnity as nearly as may be in Form XII for twice the value of the security or securities involved and the interest paid thereon since the date of issue.

(2) A fee of Re. 1 shall be paid for each certified copy granted under rule 42.

THE SCHEDULE.

[*See rule 2 (d).*

FORM I.

(*See rule 5.*)

Form of Indorsement for Conversion of Stock Certificates into Bearer Bonds/Promissory Notes.

Received in lieu of this stock certificate, bearer bonds/promissory notes of Rs. each (*together with a new stock certificate for the balance amounting to Rs.*) with interest payable at Treasury.

registered holder.

Signature of the

his duly authorised representative.

FORM II.

(*See rule 5.*)

Form of Indorsement for Consolidation of Stock Certificates.

Received in lieu of stock certificates Nos. for Rs. respectively of the per cent. loan of a stock certificate for Rs. of the per cent. loan of with interest payable at Treasury.

registered holder.

Signature of the

his duly authorised representative.

FORM III.

(*See rule 5.*)

Form of Indorsement for Sub-Division of a Stock Certificate.

Received in lieu of this stock certificate stock certificates for Rs. respectively of the per cent. loan of with interest payable at Treasury.

registered holder.

Signature of the

his duly authorised representative,

FORM IV.

(See rule 9.)

Receipt for interest on Government Promissory Notes.

*Per cent. loan of*_____

Received from the Government Treasury at_____interest due on Promissory Notes as follows:—

No. of Note. *N.B.*—If the number is in a fractional form, the upper No. only need be quoted.	Amount of each Note.	Amount of half-yearly interest.			For how many half-years interest is due.	Total amount due.			Date up to which interest is due.	Name of holder of notes.
	Rs.	Rs.	A.	P.		Rs.	A.	P.		
					TOTAL ..					
					Deduct—Income-tax at pies ..					
					Net amount payable ..					

Total received (in word)_____ *Signature*_____

(State whether holder or holder's attorney or administrator)_____

FORM V

[*See rule 20 (1) (a).*]

Form of Indorsement for renewal of a Promissory Note.

Received in lieu hereof a renewed note payable to (*name of holder*), with interest payable at Treasury.

holder.

Signature of the _____

duly authorised representative of (*name of holder*).

FORM VI.

[*See rule 20 (2).*]

Form of Indorsement of the renewal of a Treasury Bill.

Received in lieu hereof a renewed Treasury Bill payable to

holder.

Signature of the _____

duly authorised representative of (*name of holder*).

FORM VII.

[*See rule 20 (1) (a).*]

Form of Indorsement for sub-division of a Promissory Note.

Received in lieu hereof notes for Rs. respectively, payable to (*name of holder*), with interest payable at Treasury.

holder.

Signature of the _____

duly authorised representative of (*name of holder*).

FORM VIII.

[*See rule 20 (1) (a).*]

Form of Indorsement for consolidation of Promissory Notes.

Received in lieu hereof a new note payable to (*name of holder*) for Rs. by consolidation with promissory note or notes Nos. (*mentioning the numbers and amounts of the other notes desired to be consolidated with it and specifying the loan*) with interest payable at Treasury.

holder.

Signature of the _____

duly authorised representative of (*name of holder*).

FORM IX.

[*See rule 20 (1) (c).*]

Form of Indorsement for conversion of Promissory Notes into Bearer Bonds.

Received in lieu hereof and of notes numbers in the loan of of the value of Rs. a bearer bond (or bonds) of Rs. each amounting to Rs. with interest payable at Treasury.

holder.

Signature of the _____

duly authorised representative of (*name of holder*).

FORM X.

(*See rule 36.*)

Know all men by these presents that we

Tho obligor and his sureties are the parties.

are held and firmly bound to THE RESERVE BANK OF INDIA, PUBLIC DEBT OFFICE, CALCUTTA, in the sum of Rupees of lawful money of British India to be paid to the said RESERVE BANK OF INDIA, PUBLIC DEBT OFFICE, CALCUTTA, or to the said Bank's certain attorneys successors or assigns for which payment to be well and truly made we bind ourselves and each of us our and each of our heirs executors administrators and representatives and every of them jointly and severally by these presents sealed with our respective seals. Dated this day of 19 .

Whereas a certain promissory note or securit of the Government of India, No. of the per cent. Loan of for Rs. , dated the day of 19 , were drawn for and on behalf of the then Secretary of State for India in Council by the order and under the authority of the then Governor General of India in Council in favour of one

Here recite facts and defects in indorsements.

And whereas the said has applied to the said RESERVE BANK OF INDIA, PUBLIC DEBT OFFICE, CALCUTTA, to renew the said promissory note or securit in favour and in proper name which the said RESERVE BANK OF INDIA, PUBLIC DEBT OFFICE, CALCUTTA, have consented and agreed to do on the said with two good and sufficient sureties entering into and executing the above written bond or obligation subject nevertheless to the condition hereunder written and whereas the above bounden at the request of the said have agreed to become sureties for and to join with in executing the above written bond or obligaion. Now the condition of the above written bond or obligation is such that if the above bounden and each of them their and each of their heirs executors administrators or representatives or any or either of them shall from time to time and at all times hereafter well and effectually save defend keep harmless and indemnified the Secretary of State for India in Council and the said RESERVE BANK OF INDIA, PUBLIC DEBT OFFICE, CALCUTTA, and their lands tenements goods chattels and effects of from and against

the issue of the renewad note or securit in lieu and in place of the said promissory note or securit of the Government of India, No. of the per cent. loan of for Rupees dated the day of 19 , and standing in the name of and also from the payment of all interest which has accrued due thereon and shall from time to time hereafter accrue due thereon and also of from and against all and all manner of actions suits claims and demands whatsoever which may be instituted commenced or prosecuted or made upon or against the Secretary of State for India in Council and the said RESERVE BANK OF INDIA, PUBLIC DEBT OFFICE, CALCUTTA, by any person or persons whomsoever being or claiming to be entitled thereto or for or on account or under colour of the said promissory note or securit or of such renewed note or securit as aforesaid or the interest now due and from time to time hereafter accruing due thereon respectively and of from and against all loss costs charges and expenses whatsoever which the Secretary of State for India in Council and the said RESERVE BANK OF INDIA, PUBLIC DEBT OFFICE, CALCUTTA, shall sustain, incur, or be put to by reason or for or on account or under colour of the renewal of such promissory note or securit or for or on account or under colour of the non-payment of such promissory note or securit or of the interest now due or hereafter to accrue due thereon to any person or persons being or claiming to be entitled thereto or for or on account or by reason of these presents then the above written bond or obligation shall be void and of no effect but otherwise the same shall remain in full force and virtue.

Signed, sealed and delivered.

FORM XI.

(See rule 40.)

Form of Special Notes issued to Rulers of States in India.

Government per cent. loan of
Rs. . At *per cent.*
Of (*name of loan*) Public Debt Office,

The Governor General of India in Council hereby promises on behalf of the Secretary of State for India in Council to pay

To His Highness the Raja of , or his successor the Raja of , for the time being, at the General Treasury at Fort William on (*here state the date of discharge of the loan*) Rupees and to pay to the said Raja and His Successors Rajas of for the time being, at the General Treasury above mentioned interest on such sum from the to the date on which the same shall become payable as aforesaid at the rate of per cent. per annum such interest to be paid by equal half-yearly payments on the and on the in every year. Provided always that the said principal sum of Rupees or any part thereof and the right to receive the same and the interest thereon as aforesaid may at any time be transferred absolutely by the Raja for the time being entitled to receive the interest thereon and the Governor General of India in Council hereby agrees on surrender of this special note to issue to the said Raja or any of His Successors Raja of , for the time being and holder of this note, promissory notes of the per cent. Loan of in the usual form for the whole or part of the said principal sum according to the request of the Raja making the surrender and to any transferee or transferees under the power aforesaid, promissory notes of the same Loan in the usual form for the amount transferred and to the said Raja a special note in this form for any balance thereof not represented by the notes so issued.

Rs. dated the day of
No. 19 .

Superintendent,
(Public Debt Office),
Controller of the Currency,
for
Secretary to the Government of India.

Superintendent.

FORM XII.

(See rule 43.)

Form of Indemnity Bond.

Know all men by these presents that I/we am/are held and firmly bound unto the Secretary of State for India in Council in the sum of* Rupees of lawful money of British India to be paid to the said Secretary of State in Council his certain attorney successors or assigns for which payment well and truly to be made I/we bind myself/ourselves my/our heirs executors administrators and representatives [jointly and every two of us bind ourselves our heirs executors administrators and representatives jointly and each of us binds himself herself his and her heirs executors administrators and representatives severally] firmly by these presents sealed with my/our respective seal(s). Dated this day of in the Christian year one thousand nine hundred and and I/each of us the said

*Double the amount of the notes and Interest paid thereon since the respective dates of issue. [To be omitted if bond taken from one person only.]

do/doth hereby for myself/himself/herself and my/his and her heirs executors administrators and representatives covenant with the said Secretary of State in Council his successors and assigns that if any suit shall be brought touching the subject matter of this obligation or the condition hereunder written in any Court subject to the superintendence of the High Court of Judicature at Fort William in Bengal other than the said High Court in its Ordinary Original Civil Jurisdiction the same may at the instance of the said Secretary of State in Council be removed into tried and determined by the said High Court in its Extraordinary Original Civil Jurisdiction.

Whereas the above bounden claims to be entitled

Here state in what capacity claim to the notes is made.

to the several Government promissory notes specified and set forth in the schedule hereunder written and has caused to be represented to the said Secretary of State in Council that the said Government promissory notes have been

Set out representation made concerning the notes.

And whereas the said has/have applied to the said Secretary of State in Council for an inspection of the said notes and also for all other information and particulars respecting the said notes and whereas the Controller of the Currency (acting in the premises for and on behalf of the said Secretary of State in Council) has agreed to give inspection of the said notes and to afford to the said all information and particulars affecting the said notes on condition of the said entering into and executing such bond as above written with such condition as hereunder is written.

Now the condition of the above written bond or obligation is such that if the said heirs executors administrators and representatives shall not and will not at any time hereafter sue the said Secretary of State in Council his successors in office or assigns or any agent employed by or officer or servant of the Government for or in respect of the said Notes or the renewal or sub-division thereof or for the recovery of the value thereto or of any interest thereon or of anything done by the said Secretary of State in Council or his agents or servants in relation thereto and also shall and will save harmless and keep indemnified the said Secretary of State in Council his successors in office or assigns or any agents employed by or officer or servant of the Government against all claims demands or proceedings that may be made or instituted upon or against them or any of them by any person or persons whomsoever in consequence of the Controller of the Currency giving inspection of the said notes or affording to the said information and particulars affecting the said notes then the above written bond shall be void and of no effect otherwise the same shall be and remain in full force and virtue.

Signed, sealed and delivered by

In presence of

Witness.

Occupation and address—

THE SCHEDULE REFERRED TO IN THE FOREGOING BOND.

New Delhi, the 28th February 1935.

No. D.-2621-(A)-F.—In pursuance of clause (iv) of sub-section (1) of section 28 of the Imperial Bank of India Act, 1920 (XLVII of 1920), as amended by section 12 of the Imperial Bank of India (Amendment) Act, 1934 (III of 1934), read with section 22 of the General Clauses Act, 1897 (X of 1897), the Governor-General in Council is pleased to nominate the following gentlemen, not being officers of the Government, to be Directors of the Imperial Bank of India with effect from the 1st of April 1935, namely:—

1. Sir Dinshaw Wacha, Kt.

2. Sir Rajendranath Mookerjee, K.C.I.E., K.C.V.O.

No. D./2621-(B)-F.—In pursuance of sub-section (*3*) of section 28 of the Imperial Bank of India Act, 1920 (XLVII of 1920), as amended by section 12 of the Imperial Bank of India (Amendment) Act, 1934 (III of 1934), read with section 22 of the General Clauses Act, 1897 (X of 1897), the Governor-General in Council is pleased to nominate the Controller of the Currency to attend the meetings of the Central Board of the Imperial Bank of India.

No. D./2621-(C)-F.—In pursuance of sub-section (2) of section 1 of the Imperial Bank of India (Amendment) Act, 1934 (III of 1934), the Governor-General in Council is pleased to appoint the 1st April 1935, as the date on which the said Act shall come into force.

No. D./825-F.—In pursuance of section 47 of the Reserve Bank of India Act, 1934 (II of 1934), the Governor-General in Council is pleased to fix the rate of the cumulative dividend to be paid on the share capital of the Reserve Bank of India at 3½ per cent. per annum.

No. D./2622-F.—In pursuance of sub-section (*3*) of section 1 of the Reserve Bank of India Act, 1934 (II of 1934), the Governor-General in Council is pleased to direct that the provisions of sections 20 to 46, 49, 53, 54, 59 and 60 of the said Act shall come into force on the 1st April 1935.

P. C. TALLENTS,

Secy. to the Govt. of India.

HOME DEPARTMENT.

NOTIFICATIONS.

POLICE.

New Delhi, the 28th February 1935.

No. F. 40/IX/35.—Mr. M. F. Cleary, I.P., Superintendent of Police, under the Director, Intelligence Bureau, Home Department, is granted leave on average pay for 3 months and 12 days and on half average pay for 4 months and 5 days, with effect from the afternoon of the 11th March 1935, or such subsequent date as he may avail himself of it.

M. G. HALLETT,

Secy. to the Govt. of India.

POLITICAL.

The 28th February 1935.

No. F. 43/56/34.—The services of Mr. H. W. Lewis, I.P., are replaced at the disposal of the Government of Bengal with effect from the 13th February 1935.

T. SLOAN,

Joint Secy. to the Govt. of India.

DEPARTMENT OF COMMERCE.

NOTIFICATIONS.

MERCHANT SHIPPING.

New Delhi, the 2nd March 1935.

No. 5-M. I. (19)/34.—The services of Engineer Lieutenant Commander J. H. Mackay, R.I.N., 4th Engineer and Ship Surveyor, Mercantile Marine Department, Calcutta District, Calcutta, are replaced at the disposal of the Government of India, Army (Navy) Department, with effect from the 1st March 1935.

No. 5-M. I. (19)/34.—Engineer Lieutenant Commander H. J. Creswell, R.I.N., is appointed as officiating 4th Engineer and Ship Surveyor, Mercantile Marine Department, Calcutta District, Calcutta, with effect from the 9th December 1934, and as 4th Engineer and Ship Surveyor, Calcutta District, Calcutta, with effect from the 1st March 1935, *vice* Engineer Lieutenant Commander J. H. Mackay, R.I.N.

ECCLESIASTICAL.

The 2nd March 1935.

No. 6 (16)-Eccl.—The Reverend A. J. Pearson is appointed to be a Chaplain on probation on the Indian Ecclesiastical Establishment to fill a vacancy in the Calcutta Diocese.

H. Dow,

Joint Secy. to the Govt. of India.

Registered No. C207

The Calcutta Gazette

THURSDAY, MARCH 14, 1935.

PART IB

Educational Notices.

City and Guilds of London Institute.

Technological Examinations.

(Under the auspices of City and Guilds Examination Committee, Bengal.)

Centres, Dates and Times of Examinations, 1935.

[N.B.—Standard Time to be observed in all cases.]

Calcutta Centre (at the Calcutta Technical School, 110, Sir Surendra Banerjee Road).

Friday, May 3rd, 8-30 to 11-30 a.m.

14. Metallurgy (Iron and Steel)—Final, 1st Paper.
37A. Telephony—Preliminary.
39. Electrical Engineering Practice, Grades I and II. (D.C.) and Final, 1st Paper (Sections B. C. D.).
44. Typography—Section A. Compositors' Work—Intermediate, 1st Paper.
49B. Foundry Practice and Science—1st Paper.
49C. Machinists', Turners' and Fitters' Work—Intermediate, 1st Paper.
66. Plumbers' Work—Preliminary.

Saturday, May 4th, 8-30 to 11-30 a.m.

44. Typography—Section A. Compositors' Work—Intermediate, Practical.

Tuesday, May 7th, 8-30 to 11-30 a.m.

14. Metallurgy (Iron and Steel)—Final, 2nd Paper.
22. Dyeing of Cotton and Associated Fibres—Intermediate.
27 and 28. Cotton Spinning and Cotton Weaving, Section C. Engineering as applied to the Cotton Industry.
44. Typography—Section A. Compositors' Work—Intermediate, 2nd Paper.
48. Machine Design—Grade I.
49B. Foundry Practice and Science—2nd Paper.
49C. Machinists', Turners' and Fitters' Work—Intermediate, 2nd Paper.

Wednesday, May 8th, 8-30 to 11-30 a.m.

20. Dyeing of Silk and Rayon and Associated Fibres—Intermediate.
39. Electrical Engineering Practice—Grades I and II (A.C.) and Final Sections B. C. D., 2nd Paper.
50. Mechanical Engineers' Estimates and Specifications—Final.
54. Motor Car Engineering—Grade I and Final (written).

Thursday, May 9th, 8-30 to 11-30 a.m.

27. Cotton Spinning—(Section A). Final, 1st Paper.
37C. Radio-communication—Preliminary.
48. Machine Design—Grade II (written) and Final.
53. Railway Carriage and Wagon Building—Intermediate and Final (written).

Friday, May 10th, 8-30 to 11-30 a.m.

21. Dyeing of Wool and Associated Fibres—Intermediate.
27. Cotton Spinning—Final (Section A), 2nd Paper.
37A. Telephony—Intermediate.

37C. Radio-communication—Intermediate.
51. Boilermakers' Work—Final.
54. Motor Car Engineering—Final (Drawing).
59. Structural Engineering—Intermediate and Final.

Saturday, May 11th, 8-30 a.m. to 12-30 p.m.

24. Paper Manufacture—Intermediate and Final.
48. Machine Design—Grade II (Drawing).
53. Railway Carriage and Wagon Building (Drawing). —Intermediate and Final.

Monday, May 13th, 8-30 to 11-30 a.m.

37C. Radio-communication—Final.

Saturday, May 18th.

28. (I) Cotton Weaving (Plain Weaving)—Grade I (8-30 to 11-30 a.m.) and Final (8-30 a.m. to 12-30 p.m.).

Berhampore Centre (at the Government Silk Weaving and Dyeing Institute, Berhampore).

Friday, May 3rd, 8-30 to 11-30 a.m.

22. Dyeing of Cotton and Associated Fibres—(*a*) Technology of Fibres and Dyers' Materials—Intermediate.
31 and 32. Silk and Rayon Manufacture—Course A—Silk and Rayon Throwing and Spinning—1st and 2nd year.
31. Course A.—Silk and Rayon Throwing and Spinning —3rd and 4th year.
32. Course B.—Silk and Rayon (including Ribbon and Smallware) Weaving—Fourth year (written).

Saturday, May 4th.

28. Cotton Weaving (II Plain and Fancy Weaving)—Section B. Manufacture of Woven Textile—Final (8-30 a.m. to 12-30 p.m.)
32. Course B.—Silk and Rayon (including Ribbon and Smallware) Weaving—Fourth year (Analysis) (8-30 to 11-30 a.m.).

Tuesday, May 7th, 8-30 to 11-30 a.m.

22(*b*). Dyeing of Cotton and Associated Fibres—Intermediate.

Wednesday, May 8th, 8-30 to 11-30 a.m.

26. Woollen and Worsted (and mixed fabrics) Weaving and Designing (Division I—Cloth and Fabrics for men's wear)—Grade I.

Thursday, May 9th, 8-30 to 11-30 a.m.

28. Cotton Weaving, Section E. Chemistry as applied to the Cotton Industry.

Tuesday, May 14th, 8-30 to 11-30 a.m.

23. Textile Printing—Intermediate.

Saturday, May 18th, 8-30 to 11-30 a.m.

28. (I) Cotton Weaving (Plain Weaving)—Grade I and Final.

Dacca Centre (at Jagannath Intermediate College, Dacca).

Friday, May 3rd, 8-30 to 11-30 a.m.

22. Dyeing of Cotton and Associated Fibres—(*a*) Technology of Fibres and Dyer's Materials—Intermediate.
39. Electrical Engineering Practice—Grade II (D.C.).

Saturday, May 4th, 8-30 a.m. to 12-30 p.m.

28. Cotton Weaving (II Plain and Fancy Weaving)—Grade II.

Tuesday, May 7th, 8-30 to 11-30 a.m.

8. Sugar Manufacture—Grade I.
22. (*b*) Dyeing of Cotton and Associated Fibres—Intermediate.

Thursday, May 9th, 8-30 to 11-30 a.m.

48. Machine Design (written)—Grade II.

Friday, May 10th, 8-30 to 11-30 a.m.

59. Structural Engineering—Intermediate and Final.

Saturday, May 11th, 8-30 a.m. to 12-30 p.m.

48. Machine Design (Drawing)—Grade II.

Saturday, May 18th, 8-30 to 11-30 a.m.

28. (I) Cotton Weaving (Plain Weaving)—Grade I.

Serampore Centre (at the Government Weaving Institute, Serampore).

Friday, May 3rd, 8-30 to 11-30 a.m.

22. Dyeing of Cotton and Associated Fibres—(*a*) Technology of Fibres and Dyers' Materials—Intermediate.
33. Jute Spinning—Final.

Saturday, May 4th, 8-30 a.m. to 12-30 p.m.

28. Cotton Weaving (II Plain and Fancy Weaving)—Grade II.

Tuesday, May 7th, 8-30 to 11-30 a.m.

22. Dyeing of Cotton and Associated Fibres—(*b*) Dyeing of Cotton and Associated Fibres—Intermediate.

Thursday May 9th, 8-30 to 11-30 a.m.

27. Cotton Spinning—Final, Section A, 1st Paper.

Friday, May 10th, 8-30 to 11-30 a.m.

27. Cotton Spinning—Grade II and Final, Section A 2nd Paper.

Saturday, May 11th, 8-30 a.m. to 12-30 p.m.

34. Jute Weaving—Grade II.

Saturday, May 18th, 8-30 to 11-30 a.m.

28. (I) Cotton Weaving (Plain Weaving)—Grade I and Final (8-30 a.m. to 12-30 p.m.).

ADINATH SEN, *Secretary,*
City and Guilds Examination Committee, Bengal,
40-1A, Free School Street, Calcutta,
the 21st February 1935.

Presidency Division.

Calcutta, the 7th March 1935.

Erratum to the results of the Primary (Maktab) Final Examination, 1934, published in the Calcutta Gazette *of the 3rd January 1935.*

24-Parganas District.

Kulpi Centre.

Under Kulpi Practising U. P. please *read*—

113 Kari Bhusan Haldar (E) I

for

113 Kasi Bhusan Haldar (E) I.

Addendum to the results of the Primary (Maktab) Final Examination, 1934, Nadia district, published in the Calcutta Gazette *of the 3rd January 1935.*

The following candidate is declared to have passed the Primary (Maktab) Final Examination, 1934:—

(E indicates that the candidate has passed in English.)

Roll	Name.	Division.

Nadia District.

Chuadanga Centre.

Kamalapur Practising U. P.

26 Kamala Kanta Saha (E) I

Erratum to the list of scholarships awarded on the results of the Primary (Maktab) Final Examination, 1934, published in the Calcutta Gazette *of the 24th January 1935, page 246.*

Under the heading "Scholarships reserved for educationally backward classes" please *read*—

Kari Bhusan Haldar

for

Kasi Bhusan Haldar.

J. G. SEN, for *Inspector of Schools.*

University of Dacca.

NOTIFICATION No. 5388/Ex.

Ramna, Dacca, the 4th March 1935.

The next (*1*) Preliminary M.A. Examination in Mathematics only and Preliminary M.Sc. Examinations will commence on the 8th July 1935, (*2*) the Final M.A. and M.Sc. Examinations will commence on the 13th July 1935, and (*3*) the B.L. Examinations will commence on the 25th July 1935.

(*2*) Applications for admission to the examinations must be made on the printed forms, which will be obtainable at the office of the Provost of Hall to which the student belongs.

(*i*) The examination entry forms of the M.A. and M.Sc. candidates, after they have been duly filled in and signed by the candidates themselves and countersigned by the respective heads of the departments, must be presented by the candidates to the Provosts of their Halls not later than Tuesday, the 16th April 1935.

(*ii*) The B.L. Examination entry forms, after they have been duly filled in and signed by the candidates themselves and countersigned by the Dean of the Faculty of Law, must be presented by the candidates to the Provosts of their Halls not later than Tuesday, the 16th April 1935.

(*3*) Candidates must submit their University diplomas or certificates, as the case may be, as noted below, along with their entry forms to the Provosts for verification of the correctness of their names in the entry forms. Entry forms shall not be accepted without the requisite diplomas or certificates:—

(*i*) Candidates for the Preliminary B.L. Examination are required to produce their diplomas for Provosts' inspection.

(*ii*) Candidates for the Final B.L. Examination are required to produce their Preliminary Law certificates for Provosts' inspection.

(*iii*) Ordinary graduates of this or any other approved University and also Honours graduates of any approved University, who are candidates for the Final M.A. or M.Sc. Examinations of this University, are required to produce their B.A. or Preliminary M.A. or M.Sc. certificates, as the case may be, for Provosts' inspection. But such candidates must produce their University diplomas, if required by the Provosts.

(*iv*) Honours graduates of this University, who are candidates for the Final M.A. or M.Sc. Examinations of this University, must produce their B.A. Honours or B.Sc. Honours diplomas, as the case may be, for Provosts' inspection.

(*v*) Candidates for the Preliminary M.A. Examination in Mathematics and Preliminary M.Sc. Examinations must produce their diplomas for Provosts' inspection.

(*4*) Candidates must take back their certificates or diplomas, as the case may be, attached to their examination entry forms from the Provosts of the Halls concerned, within a fortnight after the examinations are over, failing which the Provosts will not be responsible for their safe-keeping.

(*5*) The examination entry forms will be checked by the Provosts in respect of all the entries made by the candidates in the entry forms. In the case of candidates who have been granted special permission to appear at the examination, the authority granting them such permission should be quoted in the entry forms of the candidates and duly attested by the Provosts.

(*6*) The examination entry forms, after they have been checked by the Provosts, will be forwarded by them to the Accounts office of the University not later than Wednesday, the 1st May 1935. The checking of entry forms by the Provosts will be regarded as final.

(*7*) Candidates must deposit their proper examination fees and all other outstanding University dues up to the month of June 1935 to the University cashier on the dates noted below for certification that all University dues including the seat rent, tuition fee, etc., have been paid in full.

(*8*) Candidates who are required to pay half the usual examination fees, under section 32 of Chapter XXXVII of the Ordinances and Regulations, must obtain in the entry form a certificate from the examination section at the time of depositing fees to the effect that they paid their examination fees, but did not appear at the examination.

Dates for payment of fees.

Time—11-30 a.m. to 2 p.m.

	Examination.	Hall.	Date. 1935,
1.	Preliminary M.A. in Mathematics only and Preliminary M.Sc. Examinations.	Dacca Hall Jagannath Hall. S. Muslim Hall.	14th and 15th May.
2.	Final M.A. and M.Sc. Examinations.	Dacca Hall Jagannath Hall S. Muslim Hall	16th and 17th May.
3.	Preliminary B.L. Examination.	Dacca Hall Jagannath Hall. S. Muslim Hall.	18th and 20th May.
4.	Final B.L. Examination.	Dacca Hall Jagannath Hall. S. Muslim Hall.	21st and 22nd May.

(*9*) The fee for the different examinations are noted below :—

(*i*) Preliminary M.A. Examination in Mathematics—Rs. 20.

(*ii*) Preliminary M.Sc. Examinations—Rs. 20.

(*iii*) Final M.A. Examination, Course A (eight papers)—Rs. 80.

(*iv*) Final M.A. Examination, Course A (four or five papers)—Rs. 60.

(*v*) Final M.Sc. Examination—Rs. 60.

(*vi*) Preliminary B.L. Examination—Rs. 45.

(*vii*) Final B.L. Examination—Rs. 45.

(*viii*) Final B.L. Examination for candidates appearing in eleven papers—Rs. 90.

(*ix*) Supplementary B.L. Examination—Rs. 22-8.

(*10*) The Accounts office will send all the examination entry forms of the candidates who have paid their examination fees and other dues, if any, to the examination section by Saturday, the 1st June 1935, at the latest.

(*11*) Examination fees and other dues must be paid on the due dates and no extension of time will be allowed. Candidates are required to pay the examination fees and other dues into the Accounts office of the University. If the fees are sent by postal or telegraphic money order, full details of the candidates must be given and the correct amount due must be sent, otherwise, the money will be refused. Fees sent in any other way, *e.g.*, by registered or insured post, will not be accepted.

N. AHMAD, *Registrar.*

Orders by the Vice-Chancellor and Syndicate of the Calcutta University.

NOTICE.

Senate House, the 9th March 1935.

The undermentioned candidate is declared to have passed the First M.B. Examination held in November 1934 :—

Das, Subodhkumar .. Carmichael Medical College, Belgachia.

B. B. DUTT,
Controller of Examinations (offg.).

Calcutta University.

NOTICE.

Senate House, the 23rd February 1935.

Applications are invited for three Ghose Travelling Fellowships, each of the value of Rs. 4,400, to be awarded by the University during the current year. The Fellowships are tenable abroad (*i.e.*, outside India) and are to be held according to the terms and conditions laid down in Schedule "Ka" of the will of the late Sir Rashbehary Ghose (*vide* page 210 of the Calcutta University Calendar for 1934). Each candidate shall be required to submit a general scheme of the work he proposes to undertake during the tenure of his Fellowship.

The Fellowships, which are tenable for one year, are open only to persons who have been at any time admitted to a degree in the Calcutta University.

Applications for the Fellowships should reach the undersigned not later than the 29th March 1935.

The application must be accompanied by a statement form (which may be obtained from the undersigned), duly filled in.

J. CHAKRAVORTI, *Registrar.*

Burdwan Division.

Chinsura, the 5th March 1935.

The undermentioned candidates are declared to have passed the Examination on the Art and Practice of Teaching, held on the 18th February 1935:—

1. Kedar Nath Bhattacharjee, 2nd Master, Majigram M. E. School (Burdwan).
2. Chintaharan Bose, 2nd Master, Gopalbera M. E. School (Burdwan).
3. Bibhuti Bhusan Bose, 2nd Master, Barabalaram M. E. School (Burdwan).
4. Duksha Haran Mukherjee, 3rd Master, Kshirgram M. E. School (Burdwan).
5. Bilwa Nath Deyasin, 2nd Master Billeswar M. E. School (Burdwan).
6. Kushadhaj Pal, 3rd Pandit, Billeswar M. E. School (Burdwan).
7. Sadananda Mallick, 2nd Master, Debpur M. E. School (Burdwan).
8. Manindra Chandra Ghosal, 2nd Master, Kaigram M. E. School (Burdwan).
9. Nalin Chandra Bhandari, Head Master, Baital M. E. School (Bankura).
10. Sankar Chandra Singha, 2nd Master, Banki Sundar M. E. School (Bankura).
11. Sudhakar Banerjee, Head Master, Moyureswar M. E. School (Birbhum).
12. Rampada Chatterjee, Head Master, Kanachi M. E. School (Birbhum).
13. Gopeswar Saha, 2nd Master, Laha Nisparoon M. E. School (Birbhum).
14. Nirod Baran Goswami, Head Master, Gossain-Malipara M. E. School (Hooghly).
15. Ramkrishna Rakshit, English Teacher, Bhadrakali M. E. School (Hooghly).
16. Gokul Chandra Banerjee, Head Master, Monohar M. E. School (Howrah).
17. Nikhil Nath Mukherjee, 2nd Teacher, Bally-Barrackpur M. E. School (Howrah).
18. Phatic Chandra Khanra, 2nd Master, Jhorehat M. E. School (Howrah).
19. Kartick Chandra Kundu Chowdhury, 3rd Teacher, Horehat M. E. School (Howrah).
20. Biseswar Acharjee, 3rd Pandit, Jorehat M. E. School (Howrah).
21. Shamsul Hoque, Head Master, Changail Junior Madrassah (Howrah).
22. Shaikh Dabiruddin Ahmed, Head Master, Banharishpur Junior Madrassah (Howrah).
23. Joy Krishna Prosad, Teacher, Victoria Ward Free Primary School, Telinipara (Hooghly).
24. Dhoop Narain Rai Sharma, Vernacular Teacher, Vedic Vidyalay (Howrah).
25. Joy Narayan Roy Sharma, Assistant Teacher, Vedic Vidyalaya (Howrah).
26. Thakur Chandrika Prosad Singh, Assistant Teacher, Fakirbagan M. F. P. School (Howrah).
27. Shree Datta Singha, Head Master, Tendalbagan Free Primary School (Howrah).
28. Banshraj Singha, Teacher, Belilios Road U. P. School (Howrah).
29. Jamuna Prosad Singha, Teacher, Belilios Road U. P. School (Howrah).
30. Ram Khelan Sharma, Teacher, Murwari Vidyalaya (Howrah).

K. C. RAY,

Inspector of Schools, Burdwan Division.

Board of Intermediate and Secondary Education, Dacca.

Ramna, Dacca, the 26th February 1935.

Text Books for High School Examination, 1937.

In modification of this office notification regarding text books for the High School Examination, 1937, as published in the *Calcutta Gazette*, dated the 27th December 1934, so far as it relates to the text books in Arabic and Persian, it is hereby notified for general information that the whole book of Matriculation Arabic Selections (latest edition published by the Calcutta University) is to be read with the omission of pages 13-29 (beginning from Al-Babus Sthalith fil-Hikayat-wol-Lataif); and for the following Persian pieces only are to be read from the Calcutta University selections in Persian for the Matriculation Examination (revised edition of 1933):—

Prose.

Pages 1-18 (Selections from Gulistan).

Pages 70-83 (Selections from Columbus).

Poetry.

Pages 89-100 (Selections from Bustan).

Pages 103-112 (Selections from Attar).

Pages 165-167, 176-179, 201-204 (Selections from Ubaid).

A. KHALIQ, *Secretary.*

Board of Intermediate and Secondary Education, Dacca.

Ramna, Dacca, the 26th February 1935.

Text Books for High School Examination, 1936.

In modification of this office notification regarding text books for the High School Examination, 1936, as published in the *Calcutta Gazette*, dated the 1st March 1934, so far as it relates to the text books in Arabic, it is hereby notified for general information that the whole book of Matriculation Arabic Selections (latest edition published by the Calcutta University) is to be read with the omission of pages 13-29 (beginning from Al-Babus Sthalith-fil-Hekayat-wol-Lataif).

A. KHALIQ, *Secretary.*

Board of Intermediate and Secondary Education, Dacca.

Erratum.—No. 1785.—2nd March 1935.—In the list of successful candidates at the examinations of the Board of Intermediate and Secondary Education, Dacca, held in March 1929, as published in the *Calcutta Gazette*, dated the 16th May 1929:—

High School Examination.

Second Division.

For

Das, Nirmalkumar ... 15-11 Pogose School

please read

Das, Nirmalkumar ... 17-5 Pogose School.

A. KHALIQ, *Secretary.*

Board of Intermediate and Secondary Education, Dacca.

Erratum.—No. 1786.—2nd March 1935.—In the list of successful candidates at the examinations of the Board of Intermediate and Secondary Education, Dacca, held in March 1930, as published in the *Calcutta Gazette*, dated the 8th May 1930:—

High School Examination.

First Division.

For

Das, Krishnakanta (M) 18-5 Pogose School

please read

Das, Krishnakanta (M) 16-11 Pogose School.

A. KHALIQ, *Secretary.*

Result of the Government Commercial Course Special Examinations, 1934.

Calcutta, the 8th March 1935.

SUPPLEMENTARY.

The following candidates were unsuccessful at the Final Examination, but, having passed in the subject mentioned against their names and having deposited an additional fee of Rs. 5 each, are eligible to receive under the rules a special certificate in the subject:—

(1) S. Habibur Rahman—Junior Book-keeping.
(2) Subodh Ranjan Sarkar—Junior Book-keeping.
(3) Satya Sadhan Mukherjee—Junior Book-keeping.
(4) Saroj Kumar Banerji—Junior Book-keeping.

D. L. DUTT, *Secretary,*
Govt. Commercial Institute Board, Calcutta.

State Medical Faculty of Bengal.

REVISED NOTICE.

Grosvenor House, Calcutta, the 9th March 1935.

No. 556F. — The ensuing Dressership Examination of this Faculty of all candidates will be held in the Surgical Wards of the Campbell Medical School and Hospital, Sealdah, Calcutta, on Thursday, the 28th March 1935, at 9 a.m.

This cancels this office notice No. 310F., dated the 25th February 1935.

R. M. DAS, *Secretary.*

Registered No. C207

The Calcutta Gazette

THURSDAY, MARCH 14, 1935.

PART II

Advertisements.

Notices.

Advertisements, Notices, etc., intended for insertion in this part of the Gazette cannot be received after noon on Saturday. All manuscripts and postal remittances must be addressed to Superintendent, Government Printing, Bengal Government Press, Alipore. For the convenience, however, of parties or firms located in Calcutta cash payments of Advertisement charges may be made at Publication Sales Office, Room No. 2, Ground Floor, Writers' Buildings, Calcutta.

Land Sale Notices.

Notification A.

NOTICE is hereby given, under sections 6 and 13, Act XI of 1859, that the undermentioned estates and shares of estates in the district of Rangpur will be put up for sale at the office of the Collector of that district on 25th March 1935, at 11 a.m., for arrears of revenue and other demands which by law are realisable as arrears of land revenue.

When in columns 5, 7 and 9 of the following statement it is stated that only a share is to be sold, it is to be understood that a separate account is kept for that share :—

Tauzi No.	Name of mahal and pargana.	Sadar jama of whole estate.	Whether the whole estate is to be sold.	If only a share is to be sold, specification of such share or shares.	Names of proprietors of property to be sold.	If only a share is to be sold, the sadar jama of such share.	If the whole estate is to be sold, the arrears due from it.	If only a share is to be sold, the arrears due from it.
1	2	3	4	5	6	7	8	9
		Rs. a. p				Rs. a. p.	Rs. a. p.	Rs. a. p.
42 Rcs.	Kazirhat, hisya 4 annas, pargana Chakle Kazirhat.	10,435 6 4	No ..	8 annas share of the estate.	Annada Prasad Sen for self and sebayet of Lakshmi Jonardan Thakur.	5,217 11 2	..	1,[illegible] 1 0
42/4	Ditto ..	10,435 6 4	No ..	2 annas share of the estate. All other shares besides that specified will be excluded from sale.	Majibor Rahman Choudhury and Jahar Ulla Shah Choudhury.	1,304 6 10	..	176 2 0
77	Magura O'goyraha, pargana Chakle Kazirhat Fatepur.	9,056 11 2	Whole	....	Puran Chand Nahata, Jnan Chand Nahata.	..	2,454 7 9	..
82	Musapoalighat O'goyraha, pargana Chakle Kazirhat.	6,408 5 4	Do. ..	....	Raja Gopal Lal Roy Bahadur.	..	1,735 7 6	..
185	Kunja Sakpala, hisya 8 annas, parganas Kunja Sakpala, Bairighoraghat and Pogoil.	5,181 10 2	Do. ..	....	Ditto ..	..	1,743 7 6	..
248	Radha Krishnapur O'goyraha, pargana Andua.	9,839 5 1	Do. ..	....	Ditto ..	..	3,264 0 0	..
506	Kunja Sakpala, hisya 8 annas, parganas Allhat, Kunja Sakpala, Bairighoraghat, and Pogoil.	5,181 10 1	Do. ..	....	Brindaban Chandra Roy Choudhury.	..	1,743 7 6	..

The abovementioned estates are being advertised for sale for instalments of revenue which were due on or before the 30th Agrahayan, 1341 B.S., of which the latest date of payment was 12th January 1935 A.D.

Rangpur, the 1st March 1935.

N. M. AYYAR, Collector.

Notification A.

NOTICE is hereby given, under sections 6 and 13 of Act XI of 1859, that the undermentioned estates and shares of estates in the district of Hooghly will be put up for sale at the office of the Collector of that district on the 25th March 1935, at 12 noon, for arrears of revenue and other demands which by law are realisable as arrears of land revenue.

When in columns 5, 7 and 9 of the following statement it is stated that only a share is to be sold, it is to be understood that a separate account is kept for that share :—

Tauzi No.	Name of mahal and pargana.	Sadar jama of the whole estate.	Whether the whole estate is to be sold.	If only a share is to be sold, specification of such share or shares.	Names of proprietors of property to be sold.	If only a share is to be sold, the sadar jama of such share.	If the whole estate is to be sold, the arrears due from it.	If only a share is to be sold, the arrears due from it.
1	2	3	4	5	6	7	8	9
		Rs. a. p.				Rs. a. p.	Rs. a. p.	Rs. a. p.
7/Res.	Sliampur, pargana Sliampur.	8,067 3 0	..	2 as. 13 gds. 1 k. 1 kt. share of the whole estate except mauza Garzi and 17 gds. 3 k. 1 dt. share of mauza Garzi.	Golak Behari Nandy and others.	1,145 6 4	..	788 11 7
16/1	Bighati, pargana Boro.	3,043 6 6	..	6 as. 7 gds. 2 k. share of mauza Rajyadharpur and 4 as. 7 gds. 2 k. share of mauzas Simla and Bighati.	Manindra Nath De and others.	896 4 10	..	210 13 0
26/ Res.	Malikapur, pargana Baligori.	10,552 14 0	..	2 as. 8 gds. 3 k. share of mauza Haspur, 16 annas share of mauzas Balarampur, Mohonbati, Senpur and Malikapur, 8 annas share of Jotebanshi Samsherpur and Parbatipur, and 7 annas share of Neyamatpur, Tullan Pirijpur, Bhora Mollapur, Jote Krishna Das and Kalikapur.	Samarendra Nath Singh Roy and and others.	4,498 8 9	..	3,748 8 7
28/ Res.	Nasipur, pargana Baligori.	3,402 0 3	..	8 annas ..	Ditto ..	1,746 0 3	..	673 5 3
33/ Res.	Bahadurpur, pargana Baligori.	15,975 10 0	..	2 as. 3 gds. 1 k. 7 dt. 1 kag 15 til.	Chandi Prosad Singh Roy.	2,173 0 1	..	819 3 3
37/7	Hridoyrampur, pargana Chowmaha.	44,806 7 0	..	12 as. 16 gds. share of mauzas Baikunthapur, Hridoyrampur, Alaipur, Palsa, Katundi, Katundibahir, Jagannathpur, Kasijote, Narayanpur, Dulfa, Panchra, Paramanandapur, Maheshpurpotegopalpur, Maheshwarpur *alias* Dowarpur, Bhabanipur, Bansdarun, Bangalpur, Metaharchak, Sagrai, Bangalpurpote Ballavpur, Ballavipur, Jibanjote Natuspur, Baneswarpur, Ramkrishnapur, Belgachia, Kastagora, Amulia, Khanpur Gangarampur, Kanaipur Kismat, Chaitannabati Kismat Sangramjote, Dhontikri, Purandarpur Kismat, Chowhatta, Parameswaripur, Ruprajpur, Malikundi Kadipara, Ganeshpur, Chamanchak, Bashudebpat, Kristapur, Malikpur, Dadhibrahminpur and Raghunathpur.	Monohar Mukherji.	10,566 8 2	..	3,962 6 6
37/8	Ditto ..	44,806 7 0	..	12 as. 16 gds. share of mauzas Nachindanga, Laskhanpur, Prosadpur, Digribadey, Khagragachi, Panishehala, Bhagabotipur, Madhabjote, Jejur, Kasbapara, Nandanpur, Raktapara, Ankapara, Naiti, Jinpur, Som Sanda, Baro Sanda Samil Patahar, Hetampur, Pallagachi, Kanaipukuria, Istia, Raghunathpur, Radhaballavpur, Serampur Khordh *alias* Satghora and Sada Sivbati.	Mahendra Nath Mukherji.	10,036 7 0	..	3,607 12 0

Tauzi No.	Name of mahal and pargana.	Sadar jama of the whole estate.	Whether the whole estate is to be sold.	If only a share is to be sold, specification of such share or shares.	Names of proprietors of property to be sold.	If only a share is to be sold, the sadar jama of such share.	If the whole estate is to be sold, the arrears due from it.	If only a share is to be sold the arrears, due from it.
1	2	3	4	5	6	7	8	9
		Rs. a. p.				Rs. a. p.	Rs. a. p.	Rs. a. p.
37/9	Hridoyrampur, pargana Chowmaha.	44,806 7 0	..	12 as. 16 gds. share of mauzas Dhannyagacha, Palkpara, Bhagirathpur, Monoharpur, Sangram Chak, Anathpur, Amdhara *alias* Ghosa, Anantapur *alias* Chainpur, Anandapurbirija *alias* Palghatta, Barija *alias* Palghata, Bonwari, Bankajalkar, Barijajungalbar, Barijabakshitolia *alias* Jhankra Sarsa, Barijajalkar *alias* Kadamtala, Bhatpara, Chinney Chak, Bhairabpur, Sowta, Chingrigoria, Changgoria, Daulatchak *alias* Sudamchak, Govindapur, Gopalpur, Harinarayanpur, Hizli, Jayantipur, Jayantipur Jagannathpur Jalkar *alias* Kharija mauza, Kadamtolia, Kanalchak, Keyagoria, Keyagoriabundh, Khajemchak *alias* Ranga Metia Khejurdanga, Murokata, Mathura, Mirkuli *alias* Baittentulia, Palasi, Palangapur paikmajitta, Protappur, Ramdespur, Salua *alias* Basanbar, Suksitolia, Chainpur, Chainpur kismat, Tentulia and Daya.	Bhupendra Nath Mukherji.	10,667 4 0	..	4,000 0 0
37/10	Ditto ..	44,806 7 0	..	12 as. 16 gds. share of mauzas Ghatra, Kamdebpur, Kankra jole, Basubati and Narayanpur.	Monohar Mukherji as trustee to the estate.	4,100 0 0	..	1,538 0 0
44/1	Pandra, pargana Balia.	11,150 15 0	..	4 annas ..	Prodyat Kumar Mukherji.	2,787 12 11	..	936 3 3
44/2	Ditto ..	11,150 15 0	..	4 annas ..	Kalidas Mukherji and others.	2,788 2 0	..	1,180 0 0
47/ Res.	Sanchitara, pargana Pandua.	47,385 11 11	..	8 annas share of mauzas Dumurdaha and Charmadhusudanpur and 16 annas share of mauzas Saleswarpur, Haripur, Benodepur, Ekloki, Kismat Ekloki, Jaminbarijhaty, Patul, Kharija Khanpur, Daulatpur, Ramchandrapur Chakran, Kundhara Mathurpur, Kirtinagore, Payen, Akutipota, Jotekusal, Rampur, Manpara, Acharjyapur, Dakhinpara of Mahanad, Kagchipara, Rahimpurpara, Radha Krishto Neogy's Kharijaproja, Salukgorey, Kantalpara, Ghosepur, Ramanathpur, Ramnathpur, Sunia, Dattapote, Kherojabad Duttabati, Sarkarpote, Ballabati, Baluhatihat Chandul, Bhaskur Gokulpur, Hat Chandul, Krishnajote, Chaitpara, Panchdewli, Depaldighi, Balaidighi, Ramakantapur, Nealy, Fateypur, Krishna Chandrapur, Lakmikantapur, Madanpur, Panchlol, Srimantapur, Reshena, Rampur *alias* Sahasarampur, Dehati *alias* Srimukbati, Paranchapur, Paikpara, Lalitagore, Ramchandrapur, Brindhaberechak, Chongdarbundh, Naricha and Kusaljote.	Rajendra Nath Roy as receiver to the estate of Abani Nath Mukherji.	23,764 14 7	..	28,348 6 0
51	Paigachi, pargana Raipur.	562 7 6	Entire	....	Bhujendra Nath Biswas.	..	176 0 0	

Touzi No.	Name of mahal and pargana.	Sadar jama of the whole estate.	Whether the whole estate is to be sold.	If only a share is to be sold, specification of such share or shares.	Names of proprietors of property to be sold.	If only a share is to be sold, the sadar jama of such share.	If the whole estate is to be sold, the arrears due from it.	If only a share is to be sold, the arrears due from it.
1	2	3	4	5	6	7	8	9
		Rs. a. p.				Rs. a. p.	Rs. a. p.	Rs. a. p.
54/ Res.	Thalpara, pargana Pandua.	1,066 1 0	..	8 as. 2 k. 3 kag 11 til 9 tilkag 10 tilganda share of mauzas Srirambati, Kanur, Nakurthan, Charalhati, Gossainpur *alias* Monoharpur, Matukpur, Golagori, Idrakpur, Bhajanpur, Brahmapur, Isuragori, Ilampur, Purusattampur, Kabirhati, Magura and Balarampur Nijthalpara. 7 as. 8 gds. 2 k. 3 kag 16 til share of mauzas Sripala, Bagmaidan, Sainbona, Pachgora, Daihat, Achgori and Kailsanda.	Sourendra Nath Mittra and Anath nath Roy as receiver to the estate of Surendra Nath Mittra and others.	522 12 0	..	105 14 11
65/1	Nandigram, pargana Pandua.	1,975 0 0	..	4 as. 16 gds. ..	Shaikh Khoda Bux Mistry.	592 10 0	..	208 1 6
65/2	Ditto ..	1,975 9 0	..	4 as. 16 gds. ..	Ditto ..	592 10 0	..	220 4 0
68	Nokabati, pargana Chowmaha.	1,041 8 6	Entire	....	Provash Chandra Majumdor and others.	..	408 8 6	..
72/ Res.	Gopalnagore, pargana Jahanabad.	2,917 11 2	..	8 as. 0 gds. 2 k. 2 kt. ..	Aditya Prosad Roy and others (auction-purchaser Sukumar Bose).	1,519 10 5	..	2,715 9 8
72/B	Ditto ..	2,917 11 2	..	4 as. 3 gds. 1 k. 1 kt. ..	Sukumar Bose, auction-purchaser.	759 13 0	..	1,212 3 3
77/1	Bandipur, pargana Bandipur.	14,781 4 0	..	2 as. 13 gds. 1 k. 1 kt.	Minor Amarjit Lal Chowdhury and three others. Guardian mother Padmabala Debi.	2,463 10 4	..	2,274 15 1
77/3	Ditto ..	14,781 4 0	..	2 as. 13 gds. 1 k. 1 kt.	Birendra Lal Chowdhury.	2,463 10 4	..	1,845 5 3
77/6	Ditto ..	14,781 4 0	..	17 gds. 3 k. 1 dt. ..	Ditto ..	821 4 0	..	730 0 1
82/1	Rampara, pargana Balia.	10,514 6 0	..	11 as. 8 gds. 2 k. ..	Kumud Prokash Ganguly and two others as trustees to the estate of late Maharaja Sir Jatindra Mohan Tagore, K.C.S.I.	7,517 15 3	..	2,812 13 3
86/ Res.	Ghaneshyampur, pargana Balligori.	4,275 12 0	..	8 annas	Samarendra Nath Singha Roy and others.	2,137 14 0	..	744 3 4
94/ Res.	Ramnarayanpur, pargana Balligori.	10,258 15 0	..	5 annas	Panna Lal Paramanik and another.	3,206 5 2	..	960 14 8
107/1	Hudabasudebpur, pargana Arsha.	9,099 11 0	..	3 as. 11 gds. 1 kt. 1 dt.	Murali Mohan Sen and others.	2,026 7 3	..	755 10 10
119	Hatikanda, pargana Hatikanda.	1,279 5 2	Entire	....	Birendra Lal Chowdhury and others.	..	1,049 2 9	..
122	Silampur, pargana Silampur.	701 0 0	Do. ..	....	Sashi Bhusan Sil and others.	..	186 4 3	..
126/ Res.	Ditto ..	2,107 11 0	..	17 gds. 3 k. 1 dt. share of mauza Gopalpur. 8 as. 6 gds. 2 k. 2 kt. share of mauza Kamalpur. 7 as. 4 gds. 1 k. 2 kt. 7 til share of mauza Dumurdaha. 12 as. 1 k. 1 kt. 1 dt. 1 job share of mauza Joypur. 7 as. 9 gds. 2 k. 1 kt. 1 dt. 2 job share of mauza Panchrokhi. 12 as. 6 gds. 2 k. 2 kt. share of mauza Sivarampur. 12 as. 13 gds. 2 kt. 2 dt. 2 job share of mauza Saraswatipur. 16 annas share of mauza Sadhubangali. 10 as. 13 gds. 1 k. 1 kt. share of mauza Dhokchora. 8 as. 17 gds. 3 k. 1 dt. share of mauza Boga.	Sourendra Nath Chatterji and others. Akhoy Kumar Sett. Suresh Chandra Roy.	987 10	..	82 12 5
127/ Res.	Ditto ..	776 15 6	..	10 as. 10 gds. 3 k. 1 kt. 19 til.	Subodh Kumar Mukherjee and others.	512 1 3	..	132 9 3

Tauzi No.	Name of mahal and pargana.	Sadar jama of the whole estate.	Whether the whole estate is to be sold.	If only a share is to be sold, specification of such share or shares.	Names of proprietors of property to be sold.	If only a share is to be sold, the sadar jama of such share.	If the whole estate is to be sold, the arrears due from it.	If only a share is to be sold, the arrears due from it.
1	2	3	4	5	6	7	8	9
		Rs. a. p.				Rs. a. p.	Rs. a. p.	Rs. a. p.
128	Dadpur, pargana Pownan.	512 9 4	Entire ..	...	Lala Nani Gopal Raboo and another.	..	191 2 1	..
140	Radhanagore, pargana Khosalpur.	3,101 14 0	Do. ..	....	Hemendra Nath Singh and ohers, sebaits of Brindabanjew Thakur.	..	1,708 14 5	..
150	Haripur, pargana Balia.	6,818 1 4	Do. ..	....	Kumud Prokash Ganguly and two others as trustees to the estate of late Maharaja Sir Jatindra Mohan Thakur, K.C.S.I.	..	2,545 0 7	..
2034	Sultanpur Char, pargana Pat Mahal.	938 7 9	Do. ..	....	Sm. Sukeshi Dasi	..	417 15 9	..
3497	Panchgachia, pargana Baligori.	1,163 13 6	Do. ..	....	Jnanendra Nath Singh Roy.	..	375 0 0	..
3498	Ditto ..	1,163 14 6	Do. ..	....	Promode Nath Singh Roy and others.	..	375 0 0	..
3499/ Res.	Jogomohanpur in Ghaneshyampur, pargana Baligori.	3,264 13 11	..	8 annas ..	Samarendra Nath Singha Roy and others.	1,032 5 11	..	600 0 0
3541/ Res.	Khorsarai, pargana Boro.	1,311 10 6	..	8 annas ..	Sm. Jogmaya Dasi and others.	655 13 0	..	108 5 4
3632/ Res.	Chutipur, pargana Chutipur.	1,383 2 4	..	13 as. 11 gds. 1 k. 2 kt. 14 til.	Sm. Charusila Debi and others.	1,173 4 4	..	55 4 11
3876/ 1.	Bakerbadarpur, pargana Kalkan.	5,715 10 7	..	8 annas ..	Amarendra Nath De as Administrator to the estate of Surendra Nath De and others.	2,858 0 4	..	1,848 0 2
3989/ A.	Muhammad Aminpur, pargana Muhammad Aminpur.	79,523 0 10	..	8 annas .. Separate account covers the 8 annas share of the whole estate minus 16 annas share of mauzas Nizampur, Goneshpur, Sahana and Sankhya.	Kumar Sarat Kumar Roy Bahadur.	39,397 4 0	..	12,300 2 11
4082/ Res	Kalupukuria, pargana Jahanabad.	13,518 0 0	..	2 as. 13 gds. 1 k. 1 kt. share of mauzas Ghesua and Basantapur. 1 a. 11 gds. share of Joykristopur.	Ratan Krishna Roy.	863 13 2	..	650 2 4
				15 gds. 3 k. 2 dt. share of Ghosepur.	Gobardhan Chatterjee.			
4082/ B.	Ditto ..	13,518 0 0	..	2 as. 13 gds. 1 k. 1 kt. share of mauzas Kalupukuria, Ghesua, Ghosepur, Debkhanda, Basantapur, Mohammadpur and Joykristopur.	Nakur Chandra Roy and others.	2,253 2 6	..	2,317 9 0
4082/ 1.	Ditto ..	13,518 0 0	..	2 as. 13 gds. 1 k. 1 kt. share of mauzas Kalupukuria, Debkhanda and Muhammadpur.	Sunil Kumar Hazra.	544 0 0	..	356 3 3
4086	Govindapur, pargana Jahanabad.	10,407 4 7	Entire	....	Monohar Lal Sil	..	3,896 8 7	..
	Temporarily-settled estates.							
	(Settled for 15 years with effect from 1st April 1922.)							
2025	Rampur Char, pargana Patmahal.	854 8 0	Entire	....	Khagendra Nanda Asram, Sebait of Brindaban Chandra Thakur.	..	491 12 0	..
2027	Krishnabati New Char, pargana Raipur.	2,050 7 0	Do. ..	....	Ditto ..	..	1,401 8 0	..
2035	Krishnabati Char, pargana Raipur.	1,639 0 0	Do. ..	....	Ditto ..	..	912 9 6	..
2092	Krishnabati Cherra Char, pargana Raipur.	1,996 8 0	Do. ..	....	Ditto ..	..	1,237 6 9	..

All shares other than that specified will be excluded from the sale.

These estates are being advertised for instalments of revenue which were due on or before the 30th Agrahayan, 1341 B. S., of which the latest date of payment was 12th January 1935.

Hooghly, the 25th February 1935.

[ILLEGIBLE], *for* Collector

Notification A.

NOTICE is hereby given, under sections 6 and 13, Act XI of 1859, that the undermentioned estates and shares of estates in the district of Rajshahi will be put up for sale at the office of the Collector of that district on the 25th March 1935, at 12 noon, for arrears of revenue and other demands which by law are realizable as arrears of land revenue.

When in columns 5, 7 and 9 of the following statement it is stated that only a share is to be sold, it is to be understood that a separate account is kept for that share—

Tauzi No.	Name of mahal and pargana.	Sadar jama of whole estate.	Whether the whole estate is to be sold.	If only a share is to be sold, specification of such share or shares.	Names of proprietors of property to be sold.	If only a share is to be sold, the sadar jama of such share.	If the whole estate is to be sold, the arrears due from it.	If only a share is to be sold, the arrears due from it.
1	2	3	4	5	6	7	8	9
		Rs. a. p.				Rs. a. p.	Rs. a. p.	Rs. a. p.
222	Shibdebpara, pargana Tegachi.	2,515 9 0 Police— 25 10 0	No ..	Residuary—Seven annas and ten gandas share.	Maulvi Choudhury Md. Mazaharal Haque and others.	1,179 3 0 Police— 12 0 0	..	L. R.— 302 3 6
				S. A. No. 1—Two annas, ten gandas, one cora, 1½ danti and 10 6/31 jobs share.	Choudhury Fazlar Rahim Abu Ahmed and others.	396 3 6 Police— 3 14 6	..	L. R.— 98 2 6
				S. A. No. 2—Four annas share. (All other shares besides those specified will be excluded from the sale.)	Bibi Hafezatan Nessa Unmatan Fatema Chowdhurani.	628 14 0 Police— 6 7 0	..	L. R.— 213 13 0
230	Dehi Dhankora, pargana Tegachi.	4,556 15 0 Police— 10 11 0	No ..	S. A. No. 3—Two annas, one ganda, one cora, three kags and 17 41/180 til share.	Bibi Taheratan Nessa Unmata Rafia Chowdhurani and others.	588 4 0 Police— 1 4 3	..	L. R.— 113 2 3
				S. A. No. 6—Two annas, nine gandas, one cora and two kags share.	Bibi Jamilatan Nessa and others.	703 6 0 Police— 1 9 0	..	L. R.— 230 15 0
				S. A. No. 7—Two annas, nine gandas, one cora, and two kags share.	Bibi Hafezatan Nessa Unnatan Fatema Chowdhurani.	703 8 0 Police— 1 10 0	..	L. R.— 241 15 0
				S. A. No. 8—One anna, one ganda, two coras, one kag and ten tils share.	Hazi Khandakar Maulvi Mahamed Mahasen Khan Bahadur and others.	307 13 0 Police— 0 11 0	..	L. R.— 105 12 0
				S. A. No. 9—One anna, one ganda, two coras, one kag and ten tils share. (All other shares besides those specified will be excluded from the sale).	Syed Mahamed Masud and others.	307 13 0 Police— 0 11 0	..	L. R.— 84 12 0
254	Dehi Banalla, pargana Gobindapur.	8,918 2 0 Police— 39 8 0	No ..	Residuary—Four annas share.	Nirod Bala Debi, sebait of (a) Sree Sree Iswar Salagram Sila Bigraha Deb Thakur.	979 8 0 Police— 9 14 0	..	L. R.— 425 1 0
				S. A. No. 3—Two annas and ten gandas share. (All other shares besides those specified will be excluded from the sale.)	Srish Chandra Sanyal.	612 3 0 Police— 6 3 0	..	L. R.— 265 10 0 Police— 1 8 0
274	Sujanagar, pargana Sujanagar.	5,056 15 0 Police— 33 1 0	No ..	Residuary—Four annas share. (All other shares besides that specified will be excluded from the sale.)	Maharaj Bahadur Singha.	1,264 3 6 Police— 8 5 0	.. —	L. R.— 429 12 0 Police— 2 11 0
303	Dhamin, pargana Dhamin.	2,195 0 1	No ..	Residuary—Six annas and sixteen gandas share.	Syed Mahamed Masud and others.	933 4 2	..	L. R.— 185 13 6
				S. A. No. 1—Two annas twelve gandas, two krantis and 5 37/93 dantis share.	Khandakar Khaja Bahauddin Hossain and others.	355 11 9	..	L. R.— 32 11 0
				S. A. No. 6—Four annas and fourteen gandas share. (All other shares besides those specified will be excluded from the sale.)	Bibi Wasiatan Nessa Unmatan Ayesha Chowdhurani.	644 12 6	..	L. R.— 158 8 0
304	Jahanabadh, pargana Dhamin.	792 0 0	Yes ..	....	Nalinakhi Chowdhurani.	..	L. R.— 391 0 0	..
342	Dehi Naradingi, pargana Kaligaon Kalisofa.	5,945 6 0	No ..	Residuary—Seven annas and seven gandas share. (All other shares than that specified will be excluded from the sale.)	Babu Brindaban Chandra Dey, Manager, Kasimbazar Raj Wards estate on behalf of (a) Maharaja Srish Chandra Nandi Bahadur and others.	2,731 3 3	..	L. R.— 551 6 9
363	T. Mahishkundi, pargana Chandial.	7,192 14 0	Yes	....	Upendra Nath Maitra	..	L. R.— 1,671 7 0	..

Tauzi No.	Name of mahal and pargana.	Sadar jama of whole estate.	Whether the whole estate is to be sold.	If only a share is to be sold, specification of such share or shares.	Names of proprietors of property to be sold.	If only a share is to be sold, the sadar jama of such share.	If the whole estate is to be sold, the arrears due from it.	If only a share is to be sold, the arrears due from it.
1	2	3	4	5	6	7	8	9
		Rs. a. p.				Rs. a. p.	Rs. a. p.	Rs. a. p.
430	Dehi Brichapila, pargana Tappe Chapila.	3,274 11 0	No ..	Residuary—Three annas and ten gandas share.	Syed Mahamed Masud and others.	716 5 6	..	L. R.— 235 2 3
				S. A. No. 1—Two annas, twelve gandas, one cora, two dantis and $1\frac{6}{31}$ jobs share.	Khandakar Khaja Bahauddin Hossain and others.	535 5 0	..	L. R.— 65 13 6
				S. A. No. 4—Ten gandas share.	Bibi Fatema Khatun Chowdhurani.	102 5 6	..	L. R.— 34 12 0
				S. A. No. 5—Four annas share.	Maulvi Chowdhury Md. Mozaharal Haque and others.	818 10 9	..	L. R.— 275 10 0
				S. A. No. 6—Four annas share.	Bibi Hafezatan Nessa Unmatan Fatema Chowdhurani.	818 10 9	..	L. R.— 278 8 0
				(All other shares besides those specified will be excluded from the sale.)				
456	Dalil and others, pargana Byash.	4,669 8 0 Police— 46 15 0	No ..	S. A. No. 1—Two annas thirteen gandas, one cora and one kranti share.	Mirja Mahamed Yakub.	778 4 0 Police— 7 13 0	..	L. R.— 266 11 0 Police— 2 3 0
				(All other shares than that specified will be excluded from the sale.)				
483	Ispenjarpur *alias* Darusa, pargana Mahamedpur.	4,710 14 0	Yes ..	....	Dharani Kumar Ghosh and another.	..	L. R.— 897 0 0	..
1845	Jiasindhu, pargana Jiasindhu.	6,411 5 0 Police— 64 11 0	No ..	Residuary—Fourteen annas, eleven gandas, two coras and two krantis share.	Nabin Chandra Saha Chowdhury and others.	5,843 10 0 Police— 58 9 0	..	L. R.— 404 8 0
				(All other shares besides that specified will be excluded from the sale.)				
1850	Jiasindhu (Sree Sree Sarat Kali), pargana Jiasindhu.	801 6 9 Police— 8 0 6	Yes ..	....	Kuladyini Choudhurani, guardian of (*a*) Kalipada Roy, (*b*) Debipada Roy, minors, sabaits of Sree Sree Sarat Kali Thakurani.	..	L. R.— 247 8 0 Police— 2 4 0	..
2239	Bongaon Jaigir, pargana Bongaon Jaigir.	1,323 10 0 Police— 13 5 0	Yes ..	....	Hazratulla Shah and others.	..	L. R.— 535 7 0 Police— 3 6 0	..
2278	Dihi Puthia, pargana Mahamedpur.	1,636 1 0	Yes ..	....	Maulvi Choudhury Mahamed Mazaharal Haque and others.	..	L. R.— 556 7 0	..
2279	Ditto ..	1,636 1 0	Yes ..	....	Chowdhury Mahamed Jille Kadir and others.	..	L. R.— 417 5 3	..
2280	Ditto ..	715 13 0	Yes ..	....	Bibi Jamilatan Nessa and others.	..	L. R.— 243 7 0	..
2281	Ditto ..	715 13 0	Yes ..	....	Syed Mahamed Masud and others.	..	L. R.— 191 11 6	..
2360	Dehi Bonabari, pargana Mahamedpur.	1,506 14 7 Police— 11 0 0	No ..	Residuary—Seven annas and ten gandas share.	Ditto ..	706 5 7 Police— 5 2 0	..	L. R.— 43 7 9
				S. A. No. 1—Three annas, six gandas, three coras, two krantis and one danti share.	Bibi Taheratan Nessa Unmatan Rafia Chowdhurani and others.	315 4 0 Police— 2 4 6	..	L. R.— 89 15 7
				S. A. No. 2—Four annas share.	Bibi Unmatan Rokya Chowdhurani.	376 12 0 Police— 2 12 0	..	L.R.— 127 7 0
				(All other shares besides those specified will be excluded from the sale.)				
2361	Dehi Bonabari including Parishon, pargana Mahamedpur.	1,507 1 7 Police— 11 0 0	No ..	Residuary—Fourteen annas share.	Chowdhury Mahamed Jille Kadir and others.	1,318 11 7 Police— 9 10 0	..	L. R.— 254 0 3 Police— 1 4 0
				(All other shares than that specified will be excluded from the sale).				
2367	Hatra and others, pargana Tegachi.	796 8 0	Yes ..	....	Radharaman Chowdhury and others.	..	L. R.— 110 15 9	..
2368	Ditto ..	558 9 0	Yes ..	....	Ditto ..	..	L. R.— 207 10 0	..
2669	Md. Abdulla, pargana Jahangirpur.	992 14 0	Yes ..	....	Mahamed Abdulla Shah and others.	..	L. R.— 337 10 0	..

This notice is issued in respect of instalments of revenue due on or before the 30th Agrahayan, 1341 B.S., of which the latest date of payment was 12th January 1935 A.D.

Rajshahi, the 1st March 1935. A. S. LARKIN, Collector.

Notification A.

NOTICE is hereby given, under sections 6 and 13, Act XI of 1859, and under section 11, Act VII of 1868, that the under-mentioned tenures and shares of tenures in the district of Tippera will be put up for sale at the office of the Collector of that district on the 25th March 1935, at 12 noon, for arrears of revenue and other demands which by law are realizable as arrears of land revenue.

When in columns 5, 7 and 9 of the following statement it is stated that only a share is to be sold, it is to be understood that a separate account is kept for that share :—

Tauzi number.	Name of taluk and pargana.	Sadar jama of whole tenure.	Whether the whole tenure is to be sold.	If only a share is to be sold, specification of such share or shares.	Names of proprietors of property to be be sold.	If only a share is to be sold, the sadar jama of such share.	If the whole tenure is to be sold, the arrears due from it.	If only a share is to be sold, the arrears due from it.
1	2	3	4	5	6	7	8	9
		Rs. a. p.				Rs. a. p.	Rs. a. p.	Rs. a. p.
1933	Joar Krishnanagar, pargana Bardakhat.	9,229 11 0	..	Tauzi No. 1933, khatian No. 2, hissa 5 as. 6 gds. 2 c. 2 kt. All other shares than that specified will be excluded from the sale.	Srimati Jyotirmayee Roy Choudhurany and others.	3,164 12 0	..	1,545 12 0 Cess— 43 7 6 1,589 3 6
2686	Taluk Mir Ramjan Ali, pargana Bardakhat.	1,991 13 0	Whole	....	Safiquer Rahman and others.	..	497 15 0 Cess— 25 15 0 523 14 0	..
2687	Bangora Dakhin Taluq Durlav Ram Deb, pargana Bardakhat.	1,445 3 0	Do. ..	....	Upendra Lochan Majumder and others.	..	361 5 0 Cess— 21 15 0 383 4 0	..
2691	Joar Darora, pargana Bardakhat.	2,871 3 0	..	Tauzi No. 2691, khatian No. 5, Myadi Patni taluk Ajodhya Ram Das.	Amrita Sekhar Das Gupta and others.	201 12 0	..	16 13 0 Cess— 0 14 9 17 11 9
				Tauzi No. 2691, khatian No. 24, Myadi Patni taluk Chand Tulla Das.	Ditto ..	308 4 0	..	69 4 9 Cess— 4 0 3 73 5 0
				Tauzi No. 2691, khatian No. 102, Myadi Patni taluk Gobinda Ram Das.	Ditto ..	207 6 0	..	17 4 6 Cess— 1 0 3 18 4 9
				Tauzi No. 2691, khatian Nos. 141 and 142, Myadi Patni taluk Hari Krishna Das.	Ditto ..	263 8 0	..	17 7 3 Cess— 1 0 9 18 8 0
				Tauzi No. 2691, khatian No. 184, Myadi Patni taluk Jagannath Das.	Kalipada Das Gupta and others.	249 1 0	..	33 11 3 Cess— 1 15 3 35 10 6
				Tauzi No. 2691, khatian No. 275, Myadi Patni taluk Nayan Ballav Das.	Amrita Sekhar Das Gupta and others.	277 5 0	..	46 3 9 Cess— 2 11 0 48 14 9
				Tauzi No. 2691, khatian No. 854, Myadi Patni taluk Hriday Ram Das Gupta. All other shares than that specified will be excluded from the sale.	Ditto ..	855 4 0	..	213 13 0 Cess— 12 6 6 226 3 6
2704	Joar Dhanapatikhola, pargana Bardakhat.	3,689 4 0	..	Tauzi No. 2704, khatian No. 6, hissa 4 annas.	Prokash Chandra Roy Sarkar and others.	890 0 0	..	388 0 0 Cess— 19 15 3 407 15 3
				Tauzi No. 2704, khatian No. 7, hissa 2 as. 17 gds. 3 c. 2 kt.	Radha Charan Nath Bhoumic.	644 15 0	..	313 14 9 Cess— 14 7 6 328 6 3
				Tauzi No. 2704, khatian No. 8, hissa 2 as. 2 kt.	Profulla Kumar Roy and others.	455 11 0	..	113 15 0 Cess— 10 3 6 124 2 6
				Tauzi No. 2704, khatian No. 9, hissa 1 a. 10 gds.	Abdul Sobhan Miah and others.	340 0 0	..	152 12 0 Cess— 7 10 0 160 6 0
				Tauzi No. 2704, khatian No. 10, hissa 15 gds. 1 c. 1 kt. 7 til.	Balkantha Chandra Sarkar.	181 4 0	..	45 0 0 Cess— 4 1 0 49 1 0
				Tauzi No. 2704, khatian No. 11, hissa 10 gandas.	Abinash Chandra Bhoumic.	124 2 0	..	31 0 0 Cess— 2 12 6 33 12 6

Tauzi number.	Name of taluk and pargana	Sadar jama of whole tenure.	Whether the whole tenure is to be sold.	If only a share is to be sold, specification of such share or shares.	Names of proprietors of property to be sold.	If only a share is to be sold, the sadar jama of such share.	If the whole tenure is to be sold, the arrears due from it.	If only a share is to be sold, the arrears due from it.
1	2	3	4	5	6	7	8	9
		Rs. a. p.				Rs. a. p.	Rs. a. p.	Rs. a. p.
				Tauzi No. 2704, khatian No. 13, jote No. 8.	Hari Charan Das ..	82 5 0	..	27 7 0 Cess— 1 13 6 29 4 6
				Tauzi No. 2704, khatian No. 14, jote No. 9.	Chandi Charan Roy	74 0 0	..	24 11 0 Cess— 2 1 0 26 12 0
				Tauzi No. 2704, khatian No. 15, jote No. 10.	Dina Nath Dhar	61 1 0	..	20 6 0 Cess— 1 5 9 21 11 9
				Tauzi No. 2704, khatian No. 16, jote No. 11.	Nabin Chandra Sarma	61 10 0	..	19 9 6 Cess— 1 6 0 20 15 6
				Tauzi No. 2704, khatian No. 17, jote No. 12.	Jagat Chandra Datta	54 1 0	..	27 1 0 Cess— 1 3 3 28 4 3
				Tauzi No. 2704, khatian No. 22, jote No. 17.	Chandra Basini Dhar	30 1 0	..	15 1 0 Cess— 0 10 0 15 11 0
				Tauzi No. 2704, khatian No. 23, jote No. 18.	Nabin Chandra De	27 10 0	..	13 13 0 Cess— 0 10 3 14 7 3
				Tauzi No. 2704, khatian No. 25, jote No. 20.	Radha Charan Bhoumic	30 4 0	.	15 2 0 Cess— 0 10 9 15 12 9
				Tauzi No. 2704, khatian No. 31, jote No. 26.	Tirth Basi Debya	27 15 0	..	13 15 0 Cess— 0 11 0 14 10 0
				Tauzi No. 2704, khatian No. 36, jote No. 31.	Radha Charan Bhoumic	14 3 0	..	7 1 0 Cess— 0 5 0 7 6 0
				Tauzi No 2704, khatian No. 43, jote No. 38. All other shares than that specified will be excluded from the sale	Hari Charan Sil	9 1 0	..	4 8 0 Cess— 0 3 0 4 11 0
2706	Mauza Gangerkut, pargana Bardakhat.	1,355 12 0	Whole	....	Raj Kumar Roy Choudhury, common manager on behalf of Trailokya Nath Roy Choudhury and others.	..	535 13 9 Cess— 25 12 0 561 9 9	..
2712	Joar Kadair Patni taluq Krisna Ch. Roy, pargana Bardakhat.	2,603 0 0	Do. ..	....	Srimati Kanak Lata Naha.	..	651 0 0 Cess— 33 0 0 684 0 0	..
2713	Mauza Char Lalpur, pargana Bardakhat.	1,518 6 0	Do. ..	....	Bharat Chandra Roy Choudhury and others.	..	725 0 9 Cess— 23 0 0 748 0 9	..
2714	Joar Maheshpur, pargana Bardakhat.	1,265 4 0	Do. ..	....	Jamini Mohan Choudhury and others.	..	316 5 0 Cess— 17 10 0 333 15 0	..
2719	Taluq Akbar Hossain, pargana Bardakhat	607 0 0	Do. ..	....	Mahendra Chandra Saha and others.	..	152 0 0 Cess— 8 0 0 160 0 0	..
2723	Taluq Mahajan Sarif, pargana Bardakhat.	591 15 0	Do. ..	....	Nowab Serajul Islam Khan Bahadur and others.	..	148 0 0 Cess— 7 11 0 155 11 0	..
2730	Joar Dighirpar, pargana Bardakhat.	6,608 13 0	Do. ..	....	Raj Kumar Roy Choudhury, common manager, on behalf of Sarada Sundari Choudhurany and others.	..	2,984 14 0 Cess— 80 0 0 3,064 14	..

This notice is issued in respect of instalments of revenue due on or before the 30th Agrahayan, 1341 B.S., of which the latest date of payment was 12th January 1935 A. D.

Comilla, the 22nd February 1935.

A. HYE, Addl. Collector.

Notification A

NOTICE is hereby given, under sections 8 and 13, Act XI of 1859, that the under-mentioned estates and shares of estates in the district of Nadia will be put up to sale at the office of the Collector of that district on the 25th day of March 1935, at 12 noon, for arrears of revenue and other demands which by law are realizable as arrears of land revenue.

When in columns 5, 7 and 9 of the following statement it is stated that only a share is to be sold, it is to be understood that a separate account is kept for that share :—

Tauzi No.	Name of mahal and pargana.	Sadar jama of whole estate.	Whether the whole estate is to be sold.	If only a share is to be sold, specification of such share or shares.	Names of proprietors of property to be sold.	If only a share is to be sold, the sadar jama of such share.	If the whole estate is to be sold, the arrears due from it.	If only a share is to be sold, the arrears due from it
1	2	3	4	5	6	7	8	9
		Rs. a. p.				Rs. a. p.	Rs. a. p.	Rs. a. p
17	Alfa, pargana Bagwan.	.	No ..	S. A. No. 1—2 as. 13 gds. 1 c. 2 kr.	Sachindra Nath Singha Roy.	1,445 0 11	..	357 0 0
				S. A. No. 2—19 gds. 2c.1kr.12tils.	Sm. Prafulla Bala Dasi	531 15 11	..	132 3 11
				S. A. No. 6—9 gds. 3 c. 13 tils.	Sachindra Nath Singha Roy.	267 14 10	..	66 2 11
				S. A. No. 22—15 gds. 2 c. 1 kr. 2 tils.	Jatindra Nath Khan	422 6 9	..	279 0 0
				S. A. No. 23—15 gds. 2 c. 1 kr. 2 tils	Satyendra Nath Khan	422 8 0	..	279 0 0
				All other shares besides that specified above shall be excluded from the sale.				
22	Belgaon, pargana Belgaon.	..	No ..	S. A. No. 1—1 a. 2 c. 2 kr. 3 tils.	Girindra Nath Saha and others.	391 0 8	.	279 2 10
				S. A. No. 2 - 3 as. 5 gds. 3 c. 2 kr.	Kanai Lal Singha Roy and another.	1,247 3 4	..	901 1 0
				S. A. No. 6—13 gds 2 c. 1 kr. 16 tils.	Kshetra Nath Paul Chowdhury and others.	260 11 7	..	45 9 11
				S. A. No. 9—1 a. 18 gds. 1 kr. 10 tils	Nrisingha Prasad Paul Chowdhury and others.	721 10 4	.	180 6 6
				S A. No. 13—19 gds 3 c. 2 kr. 4 tils.	Phani Bhushan Paul and another.	377 4 0		269 5 0
				S. A. No. 15—17 gds. 1 kr. 3 tils.	Pravash Chandra Gangull.	323 6 0	.	230 13 6
				All other shares besides that specified above shall be excluded from the sale.				
32	Baleswarpur, pargana Sahauzlal.	638 2 0	Whole ..	....	Ashumani Debi ..	..	183 0 0	.
40	Betai, pargana Betai.		No ..	S. A. No. 3—1 a 6 gds. 2 c. 2 kr.	Panchanan Banerjee and others	733 12 6	..	262 7 10
				S A. No. 9—1 a. 3 gds. 1 c. 1 kr	Lalit Mohan Mazumdar and another.	642 1 0	.	307 0 0
				All other shares besides that specified above shall be excluded from the sale.				
59	Baruipara, pargana Rajpur.	..	No ..	S. A. No. 1—2 as. 1 gd. 1 c. 2 kr. 16 tils.	Gour Krishna Sen and others	976 2 0	..	250 15 6
				S. A. No. 2—3 as. 11 gds. 1 kr. 5 tils.	Anuttam Sen and others.	1,673 5 8	..	430 6 9
				All other shares besides that specified above shall be excluded from the sale.				
61	Bali, pargana Plassey.		No ..	S A No. 2—3 as. 4 gds.	Triguna Prasad Paul Chowdhuri and others.	1,126 3 11	..	290 10 11
				All other shares besides that specified above shall be excluded from the sale.				
150	Dogachhi, pargana Betai.		No ..	S. A No. 0—11 annas	Anath Bandhu Sarkar and others.	2,764 9 0	..	128 13 2
				All other shares besides that specified above shall be excluded from the sale.				
152	Darlapur, pargana Bagwan.		No ..	S. A No. 0—3 as. 4 gds.	Kshetra Nath Paul Chowdhury and others.	540 2 3	.	142 5 9
				S. A. No. 2—2 as. 16 gds. 3 c. 1 kr. 14 tils.	Ditto ..	488 2 3	..	126 9 9
				All other shares besides that specified above shall be excluded from the sale.				

Tauzi No.	Name of mahal and pargana.	Sadar jama of whole estate.	Whether the whole estate is to be sold.	If only a share is to be sold, specification of such share or shares.	Names of proprietors of property to be sold.	If only a share is to be sold, the sadar jama of such share.	If the whole estate is to be sold, the arrears due from it.	If only a share is to be sold, the arrears due from it.
1	2	3	4	5	6	7	8	9
		Rs. a. p.				Rs. a. p.	Rs. a. p.	Rs. a. p.
157	Dhoradah, pargana Taragunia.		No ..	S. A. No. 0—1 a. 6 gds. 2 c. 2 kr.	Bibhuti Bhushan Ganguli and others.	78 8 5	..	12 6 0
				S. A. No. 1—4 as. 13 gds. 1 c. 1 kr.	Kali Kumar Saha ..	274 14 4	..	35 8 3
				S. A. No. 3—5 as. 6 gds. 2 c. 2 kr.	Gopal Chandra Ganguli	314 2 7	..	98 4 4
				S. A. No. 4—6 gds. 2 c. 2 kr.	Kali Kumar Saha and others.	19 10 2	..	5 15 6
				S. A. No. 7—1 a. 5 gds.	Kali Kumar Saha ..	73 9 11	..	22 4 2
				S. A. No. 9—2 gds. 2 kr. 13 tils.	Ditto ..	6 8 9	..	3 15 0
				S. A. No. 10—11 gds. 1 kr. 7 tils.	Ditto ..	32 11 8	..	10 12 0
				S. A. No. 11—15 gandas.	Ditto ..	44 3 0	..	13 5 9
				All other shares besides that specified above shall be excluded from the sale.				
161	Debagram, pargana Khosalpur.	..	No ..	S. A. No. 0—8 annas	Girindra Nath Saha and others.	428 7 4	..	175 0 0
				S. A. No. 1—8 annas	Ditto ..	434 11 5	..	175 0 0
				All other shares besides that specified above shall be excluded from the sale.				
235	Hossainpur, pargana Goash.	..	No ..	S. A. No. 2—8 annas	Gobinda Mohini Chowdhurani.	501 2 10	..	282 8 0
				All other shares besides that specified above shall be excluded from the sale.				
238	Ditto ..	1,002 5 9	Whole ..	....	Durgesh Nandini Biswas and another.	..	464 0 0	..
239	Ditto ..	..	No ..	S. A. No. 0—6 annas	Fatik Chandra Sihi and another.	187 15 1	..	77 0 0
				S. A. No. 1—10 annas	Panchanan Roy ..	313 3 9	..	155 0 0
				All other shares besides that specified above shall be excluded from the sale.				
243	Hatisala, pargana Bagwan.	..	No ..	S. A. No. 0—3 as. 2 gds. 3 c. 7 tils.	Sarba Ranjan Paul Chowdhury and others.	1,860 5 3	..	847 11 6
				S. A. No. 1—2 as. 13 gds. 1 c. 1 kr.	Sachindra Nath Singha Roy.	1,580 6 5	..	1,107 0 0
				S. A. No. 2—1 anna ..	Prafulla Bala Dasi	592 10 4	..	159 0 0
				S. A. No. 4—5 as. 6 gds. 2 c. 2 kr.	Nafar Chandra Paul Chowdhury. ..	3,160 12 9	..	837 5 4
				S. A. No. 7—10 gds. 2 c. 2 kr.	Sachindra Nath Singha Roy.	316 1 3	..	221 0 0
				All other shares besides that specified above shall be excluded from the sale.				
327	Mrigi Bahadurpur, pargana Rajpur.	698 11 2	Whole ..	....	Prio Krishna Mazumdar and others.	..	159 0 0	..
336	Munshibpur, pargana Munshibpur.	..	No ..	S. A. No. 5—1 a. 1 gd. 1 c. 1 kr.	Sarba Ranjan Paul Chowdhury and others.	410 14 6	..	86 14 0
				S. A. No. 8—1 a. 1 gd. 1 c 1 kr.	Satyendra Nath Khan	410 14 6	..	86 14 0
				All other shares besides that specified above shall be excluded from the sale.				
369	Nischintapur, pargana Zahangirabad.	..	No ..	S. A. No. 0—5 as. 12 gds. 2 c. 2 kr. 7 tils.	Pramatha Bhushan Paul Chowdhury and others.	498 4 9	..	87 8 9
				S. A. No. 4—2 as. 7 gds. 1 c. 12 tils.	Sarba Ranjan Paul Chowdhury and others.	209 1 10	..	77 14 3
				All other shares besides that specified above shall be excluded from the sale.				

Tauzi No.	Name of mahal and pargana.	Sadar jama of whole estate.	Whether the whole estate is to be sold.	If only a share is to be sold, specification of such share or shares.	Names of proprietors of property to be sold.	If only a share is to be sold, the sadar jama of such share.	If the whole estate is to be sold, the arrears due from it.	If only a share is to be sold, the arrears due from it.
1	2	3	4	5	6	7	8	9
		Rs. a. p.				Rs. a. p.	Rs. a. p.	Rs. a. p.
370	Nagarbanka, pargana Nagarbanka.	..	No	S. A. No. 2—2 as. 1 gd 3 c.	Surendra Nath Ghosh	918 6 0	..	200 9 0
				S. A. No. 4—2 as. 1 gd. 3 c.	Prafulla Kumar Bose and others.	918 6 0	..	672 5 10
				All other shares besides that specified above shall be excluded from the sale.				
371	Nakashipara, pargana Bagwan.	..	No	S. A. No. 1—2 as. 13 gds. 1 c. 1 kr.	Shibendra Nath Singha Roy.	1,007 4 6	..	584 12 11
				S. A. No. 2—1 anna	Nrisingha Chandra Paul Chowdhury and others.	377 11 8	..	75 15 8
				S. A. No. 3—1 a. 13 gds. 1 c. 1 kr.	Shibendra Nath Singha Roy.	629 9 0	..	366 14 0
				S. A. No. 4—10 gds. 2 c. 2 kr.	Sarba Ranjan Paul Chowdhury and others.	201 3 0	..	43 11 4
				S. A. No. 5—8 as. 11 gds. 2 kr. 8 tils.	Shibendra Nath Singha Roy.	3,233 10 0	..	1,877 11 8
				All other shares besides that specified above shall be excluded from the sale.				
399	Ukhra, pargana Ukhra.	..	No	S. A. No. 1—8 gds. 3 c. 1 kr. 16 tils.	Gourgunananda Thakur and others.	1,709 14 8	..	10 1 0
				S. A. No. 2—8 gds. 3 c. 1 kr. 15 tils.	Hrishikesh Banerjee and others.	1,709 1 6	..	18 1 0
				S. A. No. 15—5 gds. 2 c. 2 kr. 18 tils.	Ashutosh Halder and others.	1,104 13 11	..	139 9 11
				S. A. No. 24—1 c. 2 kr. 19 tils.	Dilwar Hossain Biswas and others.	127 6 11	..	13 0 4
				All other shares besides that specified above shall be excluded from the sale.				
400	Uthali, pargana Sahauzial.	..	No ..	S. A. No. 0—12 annas.	Jatindra Nath Basu	533 4 7	..	280 12 8
				All other shares besides that specified above shall be excluded from the sale.				
423	Pirpur, pargana Munshibpur.	..	No ..	S. A. No. 4—3 as. 1 gd. 2 c. 2 kr. 13 tils.	Kanai Lal Singha Roy and another.	861 1 9	..	180 0 0
				S. A. No. 5—3 as. 14 gds. 1 c. 1 kr. 1 til.	Sarba Ranjan Paul Chowdhury and others.	1,035 11 1	..	62 7 0
				All other shares besides that specified above shall be excluded from the sale.				
467	Sumirdiar, pargana Sahauzial.	..	No ..	S. A. No. 0—11 as. 4 gds. 2 c. 1 kr.	Mozaharali Joadder and others.	614 11 5	..	149 5 3
				All other shares besides that specified above shall be excluded from the sale.				
468	Shyamnagar, pargana Arsha.	..	No ..	S. A. No. 1—5 as. 12 gds. 2 c.	Mohan Krishna Sen and others.	1,034 12 9	..	432 1 6
				All other shares besides that specified above shall be excluded from the sale.				
470	Senpur, pargana Belgaon.	1,262 10 4	Whole	....	Kanai Lal Singha Roy and another.	..	320 15 11	..
472	Sonapur, pargana Bagwan.	..	No ..	S. A. No. 2—1 a. 1 gd. 1 c. 1 kr.	Manindra Nath Chatterjee and others.	211 4 1	..	49 9 7
				S. A. No. 3—1 a. 11 gds. 3 c. 2 kr. 10 tils.	Bidhu Bhushan Samaddar and others.	422 8 2	..	99 3 2
				S. A. No. 4—4 gandas.	Nani Mohan Brahma	79 3 6	..	9 4 9
				S. A. No. 11—1 a. 7 gds. 1 c. 2 kr. 14 tils.	Bidhu Bhushan Samaddar and others.	126 12 1	..	14 13 11
				S. A. No. 15—1 a. 1 gd. 1 c. 1 kr.	Karuna Nidan Brahma and others.	211 4 1	..	9 3 11
				All other shares besides that specified above shall be excluded from the sale.				
480	Sundalpur, pargana Gosh.	1,578 5 11	Whole	....	Girindra Nath Roy and others.	..	756 0 0	..
488	Sankar Chandra, pargana Sahauzial.	..	No ..	S. A. No. 1/1—3 gds. 10 tils.	Radhika Nath Biswas and another.	103 7 6	..	44 0 0
				S. A. No. 10—1 a. 6 gds. 2 c. 1 kr. 2 tils.	Nagendra Nath Banerjee and others.	903 11 1	..	349 1 0
				All other shares besides that specified above shall be excluded from the sale.				

Tauzi No.	Name of mahal and pargana.	Sadar jama of whole estate.	Whether the whole estate is to be sold.	If only a share is to be sold, specification of such share or shares.	Names of proprietors of property to be sold.	If only a share is to be sold, the sadar jama of such share.	If the whole estate is to be sold, the arrears due from it.	If only a share is to be sold, the arrears due from it.
1	2	3	4	5	6	7	8	9
		Rs. a. p.				Rs. a. p.	Rs. a. p.	Rs. a. p.
491	Sadipur, pargana Rajpur,	..	No ..	S. A. No. 2—2 annas..	Bhujendra Nath Biswas and others.	2,282 15 10	..	557 4 5
				S. A. No. 3—2 annas	Ditto ..	2,282 15 10	..	555 11 7
				S. A. No. 5—1 anna	Mahendra Nath Kundu and another.	1,141 7 11	..	278 4 0
				All other shares besides that specified above shall be excluded from the sale.				
535	Thakurpur (Munshibpur), pargana Munshibpur.	..	No ..	S. A. No. 0—8 annas.	Nafar Chandra Paul Chowdhury.	550 7 4	..	134 0 0
				All other shares besides that specified above shall be excluded from the sale.				
834	Meadi Mahal Char Durlavpur, pargana Goash.	597 0 0	Whole ..	....	Girindra Nath Roy and others.	..	149 0 0	..
840	Char Kaipal, pargana Sahauzial.	..	No ..	S. A. No. 0—8 as. 10 gds.	Jogendra Kumar Bhowmick and others.	922 12 6	..	85 15 3
				All other shares besides that specified above shall be excluded from the sale.				
867	Char Manikdihi, pargana Rajpur.	560 0 0	Whole ..	....	Santosh Kumari Dasi and others.	..	140 0 0	..
870	Char Udai Chandrapur, pargana Bagwan.	5,147 0 0	Do. ..	....	Saroj Ranjan Paul Chowdhury and others.	..	1,286 12 0	..
892	Char Srirampur, pargana Bhanderdah.	590 0 0	Do. ..	....	Ditto ..	..	147 0 0	..
910	Char Gadkhali, pargana Ukhra.	1,342 0 0	Do. ..	....	Hari Pada Mukherjee and another.	..	336 0 0	..
925	Char Muktiarpur, pargana Rajpur.	..	No ..	S. A. No. 0—13 as. 15 gds. 2 c. 13 tils.	Midnapore Zemindary & Co., Ltd., and others.	610 9 5	..	145 8 6
				All other shares besides that specified above shall be excluded from the sale.				
1786	Dighalgram, pargana Ukhra.	3,024 1 7	Whole	....	Amulya Kumar Ganguli and another.	..	632 0 0	..
2414	Hatisala, pargana Char Krishnagar.	2,055 1 10	Do. ..	....	Amala Prasad Mukherjee and others.	..	105 10 8	..
2552	Char Kalidaspur, pargana Sahauzial.	834 0 0	Do ..	....	Debendra Nath Chowdhury and others.	..	209 0 0	..
2767	Char Ramnagar, pargana Dogachi.	2,125 0 0	Do. ..	....	Bhujan Nath Mustafi and others.	..	195 8 0	..
2861	Brithihuda, pargana Bagwan.	564 14 10	Do. ..	....	Chandi Prasad Ganguli and others.	..	140 0 0	..
3541	Ashutosh, pargana Char Krishnagar.	815 1 6	Do. ..	....	Ashutosh Khan ..	..	136 5 4	..
3708	Deara Mahal Char Mahatpur and others, pargana Mahatpur.	610 0 0	Do. ..	....	Hon'ble Maharaja Kshounish Chandra Roy Bahadur.	..	6,252 0 0	..
3709	Char Ruipukur and others, pargana Ukhra.	1,263 0 0	Do. ..	....	Shiba Kumari Debi, executrix to the estate of late Ram Gopal Chetlangia with others.	..	13,578 0 0	..
3713	Deara Mahal Char Krishnachandrapur, pargana Ukhra.	725 0 0	Do. ..	....	Hon'ble Maharaja Kshounish Chandra Roy Bahadur.	..	7,431 0 0	..

This notice is issued in respect of instalments of revenue which were due on or before the 30th Agrahayan, 1341 B.S., of which the latest date of payment was on the 12th day of January 1935.

Nadia, Krishnagar, the 21st February 1935. [ILLEGIBLE], *for* Collector.

Notification A.

NOTICE is hereby given, under sections 6 and 13, Act XI of 1859, that the undermentioned estates and shares of estates in the district of Bogra will be put up for sale at the office of the Collector of that district on the 25th March 1935, at 12 noon, for arrears of revenue and other demands which by law are realizable as arrears of land revenue.

When in columns 5, 7 and 9 of the following statement it is stated that only a share is to be sold, it is to be understood that a separate account is kept for that share :—

Tauzi No.	Name of mahal and pargana.	Sadar jama of whole estate.	Whether the whole estate is to be sold.	If only a share is to be sold, specification of such share or shares.	Names of proprietors of property to be sold.	If only a share is to be sold, the sadar jama of such share.	If the whole estate is to be sold, the arrears due from it.	If only a share is to be sold, the arrears due from it.
1	2	3	4	5	6	7	8	9
		Rs. a. p.				Rs. a. p.	Rs. a. p.	Rs. a. p.
1, S. A. 2.	K. P. Shelbarsha, pargana Shelbarsha.	14,066 8 0	No ..	1 anna share of Hukmapur and others, police-station Bogra, Barabelgharia and others, police-station Shibganj, Talkhur, police-station Khetlal, Kalai and others, police-station Kahaloo, Porapara and others, police-station Dupchanchia, Binahali and others, police-station Adamdighi, Madangari, Lakshmikole and others, police-station Sherpur, Harisona and others, police-station Taras (Pabna), Andhasura and others, police-station Singra (Rajshahi), Balabari, police-station Panchupur (Rajshahi). All other shares than that specified will be excluded from sale.	Khaja Najmual Hoque.	880 15 1	..	323 8 5
2, Residuary.	Ditto ..	12,840 15 0	No ..	6 as. 6g. 2k. 2kt. of Joydebpur and others, police-station Adamdighi, Ashokola and others, police-station Bogra, Harisona and others, police-station Taras (Pabna), Paranpur and others, police-station Dupchanchia, Alokchhatra and others, police-station Kahaloo, Tunipara and others, police-station Sherpur, Chhatua and another, police-station Shibganj, Talkhur, police-station Khetlal Balabari, police-station Panchupur (Rajshahi), Andhasura, police-station Singra (Rajshahi). 2as. 12g. 1k. 10til of Sarabdipur, police-station Dupchanchia. 8as. 13g. 1k. 1kt. of Bhadaikandi and others, police-station Bogra. 5as. 18g. 3k. of Garohali, police-station Adamdighi, Kelunja and others, police-station Shibganj, Durgapur and others, police-station Bogra, Porapara, police-station Dupchanchia, Isabpur and another, police-station Kahaloo. 3as. 14g. 1kt. 8til of Palimoheshpur and others, police-station Dupchanchia. 11 annas share of Matihas and others, police-station Kahaloo, Kaigari, police-station Bogra. 3as. 3g. 1k. 1kt. of Damai and others, police-station Kahaloo. 5 annas of Bagulahar and others, police-station Bogra, Mallgachha and others, police-station Kahaloo. 12as. 3k. 1kt. of Silimpur and another, police-station Bogra. 7as. 15g. of Sakpala, police-station Bogra, Mahishmara, police-station Kahaloo, Chandmua Haripur and another, police-station Bogra.	Shah Md. Khalil Uddin Haider Abu Jober.	4,450 9 2	..	1,748 12 1

Tauzi No.	Name of mahal and pargana.	Sadar Jama of whole estate.	Whether the whole estate is to be sold.	If only a share is to be sold, specification of such share or shares.	Names of proprietors of property to be sold.	If only a share is to be sold, the sadar jama of such share.	If the whole estate is to be sold, the arrears due from it.	If only a share is to be sold, the arrears due from it.
1	2	3	4	5	6	7	8	9
		Rs. a. p.		5as. 3g. 1k. 1kt. of Phulbari and others, police-station Bogra 6as 18g. 3til of Sutrapur, police-station Bogra. 2as. 12g. 1k. 10til of Maharajal, police-station Kahaloo, Khandakhetra, police-station Bogra. 6as. 6g. 2k. 2kt. of Sabrul, police-station Bogra. 7as. 3g. 3k. of Sujabad and others, police-station Bogra. 7as. 13g. 3k. of Nishindara, police-station Bogra. 5as. 9g. 2k. 2kt. 6til of Chakbrindaban and others, police-station Bogra. All other shares than that specified will be excluded from sale.		Rs. a. p.	Rs. a. p.	Rs. a. p.
2, S. A. 9.	K. P. Shelbarsha, pargana Shelbarsha	12,849 15 0	No ..	16 annas of Katnahar, police-station Kahaloo. 8 annas of Damal and others, police-station Kahaloo. All other shares than that specified will be excluded from sale.	Syed Abdur Rub Choudhury.	138 13 9	..	52 4 3
2, S. A. 38.	Ditto ..	12,849 15 0	No ..	16 annas of Sikar, police-station Kahaloo. All other shares than that specified will be excluded from sale.	Kumud Nath Choudhury.	43 12 4	..	16 6 9
2, S. A. 103.	Ditto ..	12,849 15 0	No ..	1a. 8g. 1k. 1kt. of Khanpur and others, police-station Dupchanchia, Joydebpur, police-station Adamdighi, Parishesh and others, police-station Kahaloo. 8as. 8g. 1k. 1kt. of Dastika and others, police-station Bogra. All other shares than that specified will be excluded from sale.	Radharani Dashya Choudhurani.	593 5 3	..	222 14 9
					Total ..	5,316 8 6	..	2,040 5 10
13, Residuary.	Taraf Behar, pargana Shelbarsha.	6,519 8 0	No ..	17g. 1k. 2kt. 11til of Chingashpur and others, police-station Bogra, Borta and others, police-station Kahaloo, Bishgharia, police-station Panchupur (Rajshahi), Panaratika and another, police-station Shibganj. 8g. 2k. 2kt. 16til of Sabia, police-station Dupchanchia, Protappur and others, police-station Kahaloo, Tengra and others, police-station Bogra, Sehali and others, police-station Shibganj. 1a. 7g. 3k. of Lohajal, police-station Kahaloo. 17g. 1k. 2kt. 9til of Kazipara, police-station Kahaloo. 17g. 1k. 2kt. 8til of Khajjal, police-station Kahaloo. All other shares than that specified will be excluded from sale.	Radhika Mohan Munshi and others.	148 4 10	..	52 13 9
13, S. A. 10.	Ditto ..	6,519 8 0	No ..	16 g. 1 kt. 14 til of Chingashpur and others, police-station Bogra, Borta, police-station Kahaloo, Panaratika and another, police-station Shibganj, Bishgharia, police-station Panchupur (Rajshahi). 16 g. 2 kt. 19 til of Abilamba and others police-station Kahaloo.	Janela Khatun Bibi and others.	137 6 7	..	51 0 1

Tauzi No.	Name of mahal and pargana.	Sadar jama of whole estate.	Whether the whole estate is to be sold.	If only a share is to be sold, specification of such share or shares.	Names of proprietors of property to be sold.	If only a share is to be sold, the sadar jama of such share.	If the whole estate is to be sold, the arrears due from it.	If only a share is to be sold, the arrears due from it.
1	2	3	4	5	6	7	8	9
		Rs. a. p.				Rs. a. p.	Rs. a. p.	Rs. a. p.
				8 g. 17 til of Sabla, police-station Dupchanchia, Protappur and others, police-station Kahaloo, Tengra and others, police-station Bogra, Sehali and others, police-station Shibganj. 3 g. 2 k. of Pilkhunja, police-station Kahaloo. All other shares than that specified will be excluded from sale.				
13, S. A. 11.	Taraf Behar, pargana Shelbarsha	6,519 8 0	No ..	1 a. 14 g. 3k. 2 kt. 17 til of Chingashpur and others, police-station Bogra, Borta, police-station Kahaloo, Panaratika and another, police-station Shibganj, Bishgharia, police-station Panchupur (Rajshahi). 1 a. 14 g. 3 k. 1 kt. 16 til of Abilamba and others, police-station Kahaloo. 17 g. 1 k. 2 kt. 18 til of Sabla, police-station Dupchanchia, Protappur and others, police-station Kahaloo, Tengra and others, police-station Bogra, Sehali and others, police-station Shibganj. 7 g. 2 k. of Pilkhunja, police-station Kahaloo. All other shares than that specified will be excluded from sale.	Jamela Khatun Bibi and others.	297 13 0	..	110 9 5
					Total ..	583 8 5	..	214 7 3
14, Residuary.	Taraf Paogachha, pargana Shelbarsha.	4,194 7 6	No ..	5 g. 2 k. 1 kt. 10 til of Pirob, police-station Shibganj, Kalyanpur and others, police-station Kahaloo, Titparali, police-station Mahadebpur (Rajshahi), Khehali and others, police-station Dupchanchia, Bantair, police-station Adamdighi.	Jaiban Nessa Bibi	179 5 3	..	4 7 10
				2 g. 3 k. 15 til of Beltabandighi and others, police-station Khetlal.				
				5 g. 2 k. 1 kt. 10 til of Mirpur and another, police-station Shibganj, Alhali and others, police-station Kahaloo, Dhap and others, police-station Dupchanchia.	Shah Md. Khalil Uddin Haider Abu Jober.			
				7 g. 7 til of Bandalkhara and others, police-station Kahaloo.				
				7 g. 7 til of Khagra and another, police-station Dupchanchia, Birkedar, police-station Kahaloo, Chandimandap, police-station Dupchanchia.	Radharani Dashya			
				2 g. 3 k. 15 til of Atgaon and another, police-station Dupchanchia, Antagari, police-station Adamdighi.				
				18 g. 3 k. of Amira and another, police-station Khetlal.	Gopendra Ballav Priya and others.			
				7 as 18 g. 3 k. of Allmahamudpur, police-station Adamdighi.				
				2 g. 3 k. 15 til of Hosainnagar, police-station Adamdighi.				
				1 a. 14 g. 7 til of Amira and another, police-station Khetlal.	Asrab Ali and another.			
				7 annas. of Jiapur and another, police-station Khetlal, Nawapara, police-station Mahadevpur (Rajshahi).				
				2 g. 3 k. 15 til of Jiapur and another, police-station Khetlal, Nawapara, police-station Mahadevpur (Rajshahi), Atahar and others, police-station Shibganj.	Faratulla Talukdar and another.			
				All other shares than that specified will be excluded from sale.				

Tauzi No.	Name of mahal and pargana.	Sadar jama of whole estate.	Whether the whole estate is to be sold.	If only a share is to be sold, specification of such share or shares.	Names of proprietors of property to be sold.	If only a share is to be sold, the sadar jama of such share.	If the whole estate is to be sold, the arrears due from it.	If only a share is to be sold, the arrears due from it.
1	2	3	4	5	6	7	8	9
		Rs. a. p.				Rs. a. p.	Rs. a. p.	Rs. a. p.
14, S. A. 29.	Taraf Kahaloo, pargana Shelbarsha.	4,194 7 6	No ..	1 a. 11 g. 3 k. 1 kt. 10 til. of Khehali and others, police-station Dupchanchia, Mahiram, police-station Khetlal. 1 a. 19 g. 3 k. 1 kt. 3 til. of Khagra and others, police-station Dupchanchia, Bandaikhara, police-station Kahaloo, Birkedar, police-station Kahaloo. 15 g. 3 k. 2 kt. 5 til. of Jiapur and another, police-station Khetlal, Nawapara, police-station Mahadevpur (Rajshahi), Atgaon, police-station Dupchanchia, Atahar and others, police-station Shibganj, Chandoni and another, police-station Adamdighi. All other shares than that specified will be excluded from sale.	Md. Mahafujal Hoque Abu Taib *alias* Raja Miah.	294 6 2	..	109 15 5
14, S. A. 35.	Ditto ..	4,194 7 8	No ..	5 as. 2 k. 1 kt. 10 til. of Khehali and another, police-station Dupchanchia. All other shares than that specified will be excluded from sale.	Radharani Dashya Choudhurani.	212 15 9	..	83 8 0
					Total ..	686 11 2	..	197 15 3
43	Taraf Khadash, pargana Shelbarsha.	2,484 1 8	Yes ..	The whole estate will be sold.	Makhan Lal Dutta and others.	.. ..	775 15 1	..
90, Residuary.	Dihi Srikunda, pargana Mehamansahi.	5,777 5 7	No ..	Group A 7 g. 2 k. 2 kt. of Bandighi, police-station Bogra, Panishara and others, police-station Sherpur, Chakaingra and others, police-station Singra (Rajshahi). Group B. 3 as. 3 g. 1 k. 15 til of Kalsimati, police-station Bogra. Group C. 9 as. 5 g. 1 k. of Baraicharabhengri, police-station Taras (Pabna), Ballabhenkur and another, police-station Raiganj (Pabna), Beorapara and others, police-station Sherpur. Group D. Hulhalia, police-station Singra (Rajshahi). All other shares than that specified will be excluded from sale.	Kali Gopal Majumder and others.	1,065 6 3	..	390 3 0
90 S. A. 1.	Ditto ..	5,777 5 7	No ..	2 g. 1 k. of mauzas of Residuary Account of Group A. 1 a. 2 g. 2 k. of mauza of Residuary Account of Group C. 1 g. 1 kt. 10 til of mauzas of Residuary Account of Group D. All other shares than that specified will be excluded from sale.	Pran Kishore Tarafder and another.	101 9 1	..	37 4 8
90 S. A. 3.	Ditto ..	5,777 5 7	No ..	2 g. 1 k. of mauzas as in Residuary Account of Group A. 1 a. 2 g. 2 k. of mauzas as in Residuary Account of Group C. 1 g. 1 kt. 10 til of mauzas as in Residuary Account of Group D. All other shares than that specified will be excluded from sale.	Debendra Kishore Tarafder and others.	101 9 1	..	37 4 9

Tauzi No.	Name of mahal and pargana.	Sadar jama of whole estate.	Whether the whole estate is to be sold.	If only a share is to be sold, specification of such share or shares.	Names of proprietors of property to be sold.	If only a share is to be sold, the sadar jama of such share.	If the whole estate is to be sold, the arrears due from it.	If only a share is to be sold, the arrears due from it.
1	2	3	4	5	6	7	8	9
		Rs. a. p.				Rs. a. p.	Rs. a. p.	Rs. a. p.
90, S. A. 18.	Dihi Srikunda, pargana Mehamansahi.	5,777 5 7	No ..	6 gandas of mauzas as in Residuary Account of Group A. 13 gandas of mauzas as in Residuary Account of Group B. 2 annas of mauzas as in Residuary Account of Group C. 3 gandas of mauzas as in Residuary Account of Group D. All other shares than that specified will be excluded from sale.	Syama Kishore Munshi and others.	54 2 7	..	19 14 5
					Total ..	1,322 11 0	..	484 10 10
91, S. A. 1.	Dihi Ulipur, pargana Mehamansahi.	4,385 5 0	No ..	1 a. 2 g. 2 k. of Aman and others, police-station Sherpur. Kundais and others, police-station Bogra, Sariabad, police-station Singra (Rajshahi), Rangra, police-station Sherpur. All other shares than that specified will be excluded from sale.	Debendra Kishore Tarafder and others.	238 9 2	..	94 2 10
91, S.A. 2.	Ditto ..	4,385 5 0	No ..	1 a. 2 g. 2 k. of mauzas as in S. A. 1. All other shares than that specified will be excluded from sale.	Pran Kishore Tarafder and another.	238 9 2	..	94 2 6
91, S.A. 3.	Ditto ..	4,385 5 0	No ..	13 g. 1 k. 1 kt. of mauzas as in S. A. 1. All other shares than that specified will be excluded from sale.	Mohendra Narayan Majumder.	141 6 1	..	55 13 10
91, S.A. 4.	Ditto ..	4,385 5 0	No ..	1 a. 6 g. 2 k. 2 kt. of mauzas as in S. A. 1. All other shares than that specified will be excluded from sale.	Rajendra Lal Majumder.	282 12 3	..	111 12 0
91, S.A. 6.	Ditto ..	4,385 5 0	No ..	13 g. 1 k. 1 kt. of mauzas as in S. A. 1. All other shares than that specified will be excluded from sale.	Mohendra Narayan Majumder.	141 6 1	..	55 13 11
91, S.A. 8.	Ditto ..	4,385 5 0	No ..	1 a. 15 g. of mauzas as in S. A. 1. All other shares than that specified will be excluded from sale.	Profulla Chandra Tarafder and another.	371 1 11	..	146 10 8
91, S.A. 9.	Ditto ..	4,385 5 0	No ..	1 a. 6 g. 2 k. 2 kt. of mauzas as in S. A. 1. All other shares than that specified will be excluded from sale.	Kali Gopal Majumder and others.	282 12 2	..	111 11 11
91, S.A. 15.	Ditto ..	4,385 5 0	No	1 a. 15 g. of Srirampur and others, police-station Sherpur. All other shares than that specified will be excluded from sale.	Srish Chandra Sanyal.	108 7 9	..	43 1 3
					Total ..	1,805 0 7	..	713 5 3
97, Residuary.	Dihi Syedpur, pargana Mehamansahi.	5,327 6 2 Police— 53 5 4	No ..	16 annas of Jamur and others, police-station Sherpur. All other shares than that specified will be excluded from sale.	Kumud Nath Choudhury.	5,304 8 8 Police— 53 1 9	..	1,988 6 10 Police— 14 13 11
100, Residuary.	Dihi Subhagachha, pargana Mehamansahi.	3,590 6 0	No ..	8 annas of Khanpur, police-station Sherpur, Chandipur, police-station Singra (Rajshahi). 2 annas of Subhagachha, police-station Sherpur. 16 annas of Chhanka, police-station Sherpur. All other shares than that specified will be excluded from sale.	Nagendra Nath Sanyal and others.	112 11 3	..	38 14 8

Tauzi No.	Name of mahal and pargana.	Sadar jama of whole estate.	Whether the whole estate is to be sold.	If only a share is to be sold, specification of such share or shares.	Names of proprietors of property to be sold.	If only a share is to be sold, the sadar jama of such share.	If the whole estate is to sold, the arrears due from it.	If only a share is to be sold, the arrears due from it.
1	2	3	4	5	6	7	8	9
		Rs. a. p.				Rs. a. p.	Rs. a. p.	Rs. a. p.
100, S.A. 1.	Dihi Subhagachha, pargana Mahamansahi.	3,590 6 0	No ..	9 annas of Helanchapara, police-station Bogra, Baora and others, police-station Sherpur, Khodadpur and another, police-station Raiganj (Pabna). 4 annas of Subhagachha, police-station Sherpur. 6 annas of Phukpal, police-station Singra (Rajshahi). All other shares than that specified will be excluded from sale.	Kumud Nath Choudhury.	710 5 0	..	276 6 10
100, S.A. 2.	Ditto ..	3,590 6 0	No ..	1 anna of Helanchapara, police-station Bogra, Baora and another, police-station Sherpur, Banail and another, police-station Sherpur, Khodadpur and another, police-station Raiganj (Pabna). 10 gandas of Subhagachha police-station Sherpur, Khariapukur and others, police-station Singra (Rajshahi). 10 annas of Chhota Banshbaria, police-station Singra (Rajshahi). 13 g. 1 k. 1 kt. of Phukpal, police-station Singra (Rajshahi). All other shares than that specified will be excluded from sale.	Ditto ..	78 14 9	..	30 11 5
100, S.A. 3.	Ditto ..	3,590 6 0	No ..	3 annas of Khariapukur and others, police-station Singra (Rajshahi), Helanchapara, police-station Bogra, Baora and others, police-station Sherpur, Khodadpur and another, police-station Raiganj (Pabna). 1a. 10 g. of Subhagachha, police-station Sherpur. 2 annas of Phukpal, police-station Singra (Rajshahi). All other shares than that specified will be excluded from sale.	Gour Gopal Choudhury and others.	236 12 3	..	92 2 3
100, S.A. 5.	Ditto ..	3,590 6 0	No ..	10 annas of Mamursahi, police-station Sherpur, Gandhali, police-station Singra (Rajshahi). All other shares than that specified will be excluded from sale.	Nripendra Chandra Roy and others.	93 7 3	..	36 12 9
100, S.A. 8.	Dihi Subhagachha, pargana Shelbarsha.	3,590 6 0	No ..	6 as. 5 g. of Katham, police-station Singra (Rajshahi), Helanchapara, police-station Bogra. 1 a. 2 g. 2 k. of Khariapukur and others, police-station Singra (Rajshahi), Baora and others, police-station Sherpur, Khodadpur and another, police-station Raiganj (Pabna). 11 g. 1k. of Subhagachha, police-station Sherpur. 15 gandas of Phukpal, police-station Singra (Rajshahi). All other shares than that specified will be excluded from sale.	Upendra Chandra Choudhury.	206 0 8	..	84 9 6

Tauzi No.	Name of mahal and pargana.	Sadar jama of whole estate.	Whether the whole estate is to be sold?	If only a share is to be sold, specification of such share or shares	Names of proprietors of property to be sold.	If only a share is to be sold, the sadar jama of such share.	If the whole estate is to be sold, the arrears due from it.	If only a share is to be sold, the arrears due from it.
1	2	3	4	5	6	7	8	9
		Rs. a. p.				Rs. a. p.	Rs. a. p.	Rs. a. p.
100, S.A. 10.	Dihi Subhagachha, pargana Shelbarsha.	3,590 6 0	No ..	11 g. 1 k. of Khariapukur and others, police-station Singra (Rasjahhi), Helanchapara, police-station Bogra, Baora and others, police-station Sherpur, Khodadpur and another, police-station Raiganj (Pabna). 5 g. 2 k. 1 kt. 10 til of Subhagachha, police-station Sherpur. 7 g. 2 k. of Phukpal, police-station Singra (Rajshahi). All other shares than that specified will be excluded from sale.	Mohendra Nath Kundu.	88 12 8	..	33 14 11
100, S.A. 16.	Ditto ..	3,590 6 0	No ..	4 annas of Harini, police-station Singra (Rajshahi). All other shares than that specified will be excluded from sale.	Nirode Bala Debi	29 6 1	..	11 4 3
100, S.A. 19.	Dihi Subhagachha, pargana Mehamansahi.	3,590 6 0	No. ..	3 as. 10 g. of Katham, police-station Singra (Rajshahi), Kaphura, police-station Sherpur, Sadulbari and another, police-station Sherpur, Senganti and another, police-station Raiganj (Pabna). 1 a. 15 g. of Krishnapur, police-station Taras (Pabna), Gilabari and another, police-station Sherpur. 17 g. 2 k. of Darikhaga, police-station Sherpur, Badlason, police-station Singra (Rashahi), Burail, police-station Singra (Rajshahi). 4 annas of Harini, police-station Singra (Rajshahi). 8 g. 3 k. of Subhagachha, police-station Sherpur. All other shares than that specified will be excluded from sale.	Srish Chandra Sanyal.	247 14 1	..	96 9 4
100, S.A. 26.	Ditto ..	3,590 6 0	No. ..	4 annas of Darikhaga, police-station Sherpur, Badlason and another, police-station Singra (Rajshahi). 2 annas of Lakshmikolattar, police-station Raiganj (Pabna). 2 as. 13 g. 1 k. 1 kt. of Phukpal, police-station Singra (Rajshahi). All other shares than that specified will be excluded from sale.	Kumud Nath Sarker.	146 9 1	..	56 9 5
					Total	1,950 13 1	..	707 15 4
103	Dihi Damdighi, pargana Mehamansahi.	512 14 7 Police— 5 5 4	Yes ..	The whole estate will be sold.	Dhirendra Chandra Neogi and others.	..	189 13 11 Police— 1 0 10	..
104, S.A. 1.	Dihi Eksingha, pargana Mehamansahi.	4,026 9 10 Police— 37 5 4	No ..	15 gandas of Birkulla and others, police-station Bogra, Bhadra, police-station Sherpur, Indrason, police-station Singra (Rajshahi), Sakdaha, police-station Dhunot. 1 a. 14 g. 1 k. 8 til of Daikandi, police-station Bogra, Joanpur and others, police-station Sherpur, Salimpur and others, police-station Singra (Rajshahi). 1 a. 3 g. 2 k. 17 til of Barapathar, police-station Bogra. 8 g. 2 k. 16 til of Posi, police-station Sherpur. All other shares than that specified will be excluded from sale.	Profulla Chandra Saha Choudhury.	188 12 1 Police— 1 12 0	..	70 7 8 Police— 4 6 7

[Tauzi No.	Name of mahal and pargana.	Sadar jama of whole estate.	Whether the whole estate is to be sold.	If only a share is to be sold, specification of such share or shares.	Names of proprietors of property to be sold.	If only a share is to be sold, the sadar jama of such share.	If the whole estate is to be sold, the arrears due from it.	If only a share is to be sold, the arrears due from it.
1	2	3	4	5	6	7	8	9
		Rs. a. p.				Rs. a. p.	Rs. a. p.	Rs. a. p.
100, S.A. 3.	Dihi Eksingha, pargana Mehamansahi.	4,026 9 10 Police— 37 5 4	No ..	2 as. 10 g. of Birkulia, police-station Bogra, Bhadra and others, police-station Sherpur, Indrason, police-station Singra (Rajshahi), Sakdaha, police-station Dhunot. 5 as. 14 g. 1 k. 8 til of Joanpur and others, police-station Sherpur, Salimpur and others, police-station Singra (Rajshahi). 3 as. 18 g. 2 k. 17 til of Barapathar, police-station Bogra. 1 a. 8 g. 2 k. 17 til of Posi, police-station Sherpur. 2 annas of Sherpur, police-station Sherpur. All other shares than that specified will be exclude l from sale.	Annapurna Choudhurani.	629 2 6 Police— 5 13 4	..	234 13 3 Police— 11 10 8
104, S. A. 8.	Ditto ..	4,026 9 10 Police— 37 5 4	No ..	1 a. 15 g. of Birkulia, police-station Bogra, Bhadra and others, police-station Sherpur, Indrason, police-station Singra (Rajshahi), Sakdaha, police-station Dhunot. 4 annas of Dalkandi, police-station Bogra, Jaonpur and others, police-station Sherpur, Salimpur and others, police-station Singra (Rajshahi). 2 as. 15 g. of Barapathar, police-station Bogra. 1 anna of Posi, police-station Sherpur. All other shares than that specified will be excluded from sale.	Syama Kishore Munshi and others.	440 5 10 Police— 4 1 4	..	164 5 9 Police— 7 0 0
104, S. A. 13.	Ditto ..	4,026 9 10 Police— 37 5 4	No ..	1 a. 10 g. of Raroa and another, police-station Sherpur, Eksingha, police-station Singra (Rajshahi). All other shares than that specified will be excluded from sale.	Nirode Bala Debya.	26 4 7 Police— 0 3 11	..	9 12 10 Police— 0 2 9
104, S. A. 15.	Ditto ..	4,026 9 10 Police— 37 5 4	No ..	3 as. 10 g. of Bihigram and another, police-station Bogra, Kamarghat and another, police-station Sherpur, Narateghari, police-station Taras (Pabna). 1 a. 15 g. of Narila, police-station Bogra, Chakrajib and others, police-station Sherpur. 17 g. 2 k. of Birkulia, police-station Bogra, Bhadra, police-station Sherpur, Indrason, police-station Singra (Rajshahi), Sakdaha, police-station Dhunot. 1 a. 5 g. of Raroa and another, police-station Sherpur. 3 as. 15 g. of Eksingha, police-station Singra (Rajshahi). All other shares than that specified will be excluded from sale.	Srish Chandra Sanyal.	250 12 3 Police— 2 5 2	..	93 9 5 Police— 1 3 5
104, S. A. 17.	Ditto ..	4,026 9 10 Police— 37 5 4	No ..	1 g. 3 k. 2 kt. 5 til of Sakdaha, police-station Dhunot. All other shares than that specified will be excluded from sale.	Brojalal Talukder and another.	3 14 3 Police— 0 0 7	..	1 9 10 Police— 0 0 8
					Total ..	1,539 3 6	..	574 10 4
148, Residuary.	Chaudhurai Chhatingram, pargana Khatta.	603 8 0	No ..	9 as. 4 g. 2 k. of Panchsa and others, police-station Supchanchia, Sonai and others, police-station Adamdighi, Pirojpur and another, police-station Naogaon (Rajshahi). All other shares than that specified will be excluded from sale.	Radhika Mohan Munshi and others.	346 7 6	..	106 10 6

Tauzi No.	Name of mahal and pargana.	Sadar jama of whole estate	Whether the whole estate is to be sold.	If only a share is to be sold, specification of such share or shares	Names of proprietors of property to be sold.	If only a share is to be sold, the sadar jama of such share.	If the whole estate is to be sold, the arrears due from it.	If only a share is to be sold, the arrears due from it.
1	2	3	4	5	6	7	8	9
		Rs. a. p.				Rs. a. p.	Rs. a. p.	Rs. a. p.
148, S. A. 1.	Chaudhurai Chhatingram, pargana Khatta.	603 8 0	No ..	6 as. 15 g. 2 k. of mauzas as in Residuary Account. All other shares than that specified will be excluded from sale.	Kishori Mohan Sanyal and others.	257 0 6	..	52 6 10
					Total ..	603 8 0	..	159 1 4
176, S. A. 1.	Mauza Baonpur, pargana Apoll.	1,615 4 5	No ..	8 annas of Agra and others, police-station Panchbibi, Pechulia and others, police-station Joypurhat. All other shares than that specified will be excluded from sale.	Surabala Choudhurani.	810 7 2	..	295 15 9
187, Residuary.	Kosba Uchai, pargana Khangoir.	1,018 1 0	No ..	7 as. 9 g. 3 k. 1 kt. 10 til of Ramchandrapur and others, police-station Panchbibi. All other shares than that specified will be excluded from sale.	Provash Chandra Bashak and another.	471 1 0	..	196 6 7
187, S. A. 1.	Ditto ..	1,018 1 0	No ..	4 annas of mauzas as in Residuary Account. All other shares than that specified will be excluded from sale.	Ditto ..	252 13 10	..	101 9 1
					Total ..	723 14 10	..	297 15 8
192, Residuary.	Chhandata, pargana Doyanogor.	1,373 11 8	No ..	4 annas of Taral and another, police-station Bogra, Uttardebakhanda and others, police-station Kahaloo. All other shares than that specified will be excluded from sale.	Janaki Nath Majumder.	343 6 11	..	148 8 0
192, S. A. 2.	Ditto ..	1,373 11 1	No ..	4 annas share of mauzas as in Residuary Account. All other shares than that specified will be excluded from sale.	Atul Krishna Baral.	515 2 4	..	222 12 0
					Total ..	858 9 3	..	371 4 0
209, Residuary.	Dihi Magura, pargana Shibpur.	4,566 14 0	No ..	1 a. 15 g. 2 k. 13 til of Kundadeshma and others, police-station Bogra, Abilamba and others, police-station Kahaloo. All other shares than that specified will be excluded from sale.	Bhabani Chandra Talukder and others.	507 6 11	..	167 2 7
209, S. A. 2.	Ditto ..	4,566 14 0	No ..	5 as. 6 g. 2 k. 2 kt. of mauzas as in Residury Account. All other shares than that specified will be excluded from sale.	Upendra Chandra Choudhury.	1,522 4 10	..	167 2 7
209, S. A. 4.	Ditto ..	4,566 14 0	No ..	5 as. 6 g. 2 k. 2 kt. of mauzas as in Residuary Account. All other shares than that specified will be excluded from sale.	Digendra Nath Sarker and others.	1,522 4 9	..	166 13 5
					Total ..	3,552 0 6	..	501 2 7
684, Residuary.	Shekta and others, pargana Khangoir.	648 11 10	No ..	11 as. 10 g. of Shekta and others, police-station Panchbibi. All other shares than that specified will be excluded from sale.	Baram Uddin Choudhury.	466 9 5	..	157 6 6
684, 1. A. 8.	Ditto ..	648 11 10	No ..	2 as. 10 g. of mauza as in Residuary Account. All other sahres than that specified will be excluded from sale.	Baram Uddin Choudhury and another.	101 0 1	..	26 10 6

Tauzi No.	Name of mahal and pargana.	Sadar jama of whole estate.	Whether the whole estate is to be sold.	If only a share is to be sold, specification of such share or shares.	Names of proprietors of property to be sold.	If only a share is to be sold, the sadar jama of such share.	If the whole estate is to be sold, the arrears due from it.	If only a share is to be sold, the arrears due from it.
1	2	3	4	5	6	7	8	9
		Rs. a. p.				Rs. a. p.	Rs. a. p.	Rs. a. p.
684, S. A. 4	Shekta and others, pargana Khangoir.	648 11 10	No ..	2 annas of mauza as in Residuary Account. All other shares than that specified will be excluded from sale.	Baram Uddin Choudhury.	81 2 4	..	26 9 6
					Total ..	648 11 10	..	210 10 6
686, S. A. 1.	Thupsara and others, pargana Apoli.	4,890 4 0	No. ..	16 annas of Nadura and others, police-station Shibganj, Kauspur and others, police-station Panchbibi, Kuzisahar and others, police-station Joypurhat, Kanchakul and others, police-station Khetlal, Kanchanpur, police-station Panchbibi. 10 as. 13 g. 1 k. 1 kt. of Harunja, police-station Khetlal. All other shares than that specified will be excluded from sale.	Shyamadas Roy Choudhury.	3,011 8 0	..	823 1 7
692, Residuary.	Krishnapur and others, pargana Bindhara.	1,254 6 9	No ..	5 as. 14 g. 2 k. 1 kt. 5 til of Dibakarpur and others, police-station Panchbibi, Kokotara Kismat and others, police-station Nawabganj (Dinajpur). All other shares than that specified will be excluded from sale.	Bireswar Chattopadhya, common manager.	449 4 0	..	127 12 3
692, S. A. 1.	Ditto ..	1,254 6 9	No ..	1 a. 12 g. 2 k. of mauzas as in Residuary Account. All other shares than that specified will be excluded from sale.	Bireswar Chattopadhya.	127 6 6	..	35 15 6
692, S. A. 2.	Ditto ..	1,254 6 9	No ..	4 as. 18 g. of mauzas as in Residuary Account. All other shares than that specified wil be excluded from sale.	Ditto ..	384 2 8	..	106 11 3
692, S. A. 3.	Ditto ..	1,254 6 9	No ..	2 as. 2 g. 2 k. 1 kt. 5 til of mauzas as in Residuary Account. All other shares than that specified will be excluded from sale.	Ditto ..	167 0 1	..	46 9 0
692, S. A. 4.	Ditto ..	1,254 6 9	No ..	16 g. 1 kt. 15 til of mauzas as in Residuary Account. All other shares than that specified will be excluded from sale.	Ditto ..	63 4 9	..	16 0 0
692, S. A. 5.	Ditto ..	1,254 6 9	No ..	16 g. 1 kt. 15 til of mauzas as in Residuary Account. All other shares than that specified will be excluded from sale.	Ditto ..	63 4 9	..	16 0 0
					Total ..	1,254 6 9	..	249 0 0
911	Provash Chandra Bashak and others, pargana Barbakpur.	502 15 0	Yes ..	The whole estate will be sold.	Provash Chandra Bashak and another.	..	168 15 7	..

This notice is issued in respect of instalments of revenue which were due on or before the 30th Agrahayan, 1341 B.S., of which the latest date of payment was 12th January 1935.

[ILLEGIBLE], *for* Collector.

Bogra, the 25th February 1935.

Notification A.

NOTICE is hereby given, under sections 6 and 13, Act XI of 1859, that the undermentioned estates and shares of estates in the district of 24-Parganas will be put up for sale at the office of the Collector of that district on the 25th March 1935, at 12 noon, for arrears of revenue and other demands which by law are realizable as arrears of land revenue.

When in columns 5, 7 and 9 of the following statement it is stated that only a share is to be sold, it is to be understood that a separate account is kept for that share and all other shares besides that specified will be excluded from the sale :—

Tauzi No.	Name of mahal and pargana.	Sadar jama of the whole estate.	Whether the whole estate is to be sold.	If only a share is to be sold, specification of such share or shares.	Names of proprietors of properties to be sold.	If only a share is to be sold, the sadar jama of such share.	If the whole estate is to be sold, the arrears due from it.	If only a share is to be sold, the arrears due from it.
1	2	3	4	5	6	7	8	9
		Rs. a. p.				Rs a. p.	Rs. a. p.	Rs. a. p.
3-2	Mahal Laskarpur, pargana Magura.	..	..	4 annas share of the entire estate.	Lalkumar Roy Choudhury and others.	2,069 7 4	..	724 4 10
6 R.S.	Mahal Roynagore, pargana Magura.	..	..	16 annas share in all mauzas except Palpara and Jaffarpur.	Akshay Chandra Bose	6,806 12 2	..	1,879 14 9½
8-2	Mahal Jalfia, pargana Magura.	..	..	4 annas share ..	Lal Kumar Roy Chowdhury and others.	867 7 6	..	327 3 1
47-1	Mahal Roypur, pargana Magura.	..	..	16 annas share in each of the mauzas Gangadhar Chak, Brajamari Chak, Chak Gansing, Nij Andharmanik, Ramjibanpur, jote Sonagachhi, Joynagar, Hata, Sarsuna, Krishnarampur, Champasi Chak, Jagaddal, Bagdandi, Bade Gobindapur, Chetta Gobindapur, Boidyanathpur, Dakhineswar, Andharia, Koyradanga and Rajarampur.	Khagendra Nath Chakrabarty and others.	1,642 9 2	..	315 1 0
56 R.S.	Ditto ..	..	..	5 as. 6 gds. 2 k. 2 kt. share.	Jugol Charan Mondal and others.	1,041 8 2	..	146 2 3½
58	Mahal Bagi, pargana Magura.	1,756 0 6	Whole	....	Kumud Krishna Mondal and others.	..	186 3 4	..
63	Mahal Banshdroni, pargana Magura.	9,058 4 2	Do. ..	....	Satyendra Kumar Sarkar and others.	..	1,285 0 5½	..
67	Mahal Fatehpur, pargana Magura.	1,098 6 0	Do. ..	....	Naba Kishore Mondal and others.	..	178 7 4½	..
97	Mahal Bagi, pargana Magura.	990 10 4	Do. ..	....	Satya Ranjan Mazadar and others.	..	167 13 2½	..
106	Mahal Bagdaha, pargana Magura.	998 1 10½	Do. ..	....	Manindra Nath Banerjee and others.	..	35 7 11½	..
120 R.S.	Mahal Kodalia, pargana Baridhati	..	..	8 annas share ..	Jnanendra Nath Chatterjee and another.	2,543 14 9	..	734 2 4½
120-1	Ditto ..	..	..	8 annas share ..	Nirmal Chandra Banerjee.	2,543 15 9	..	734 2 9
145	Mahal Madarsa Bonhughly, pargana Calcutta.	5,193 14 0	Whole	....	Sm. Nanibala Dasi and others.	..	1,289 15 6½	..
146 R.S.	Mahal Jojra, pargana Anwarpur.	..	..	16 annas share in 185 mauzas.	Dharani Mohan Roy	26,207 1 9	..	16,323 8 9
147 R.S.	Mahal Benota, pargana Calcutta.	..	..	16 annas share in 53 mauzas.	Bhupati Roy Chowdhury and others.	1,828 11 10	..	638 12 0½
172-4	Mahal Gouripur, pargana Calcutta.	..	..	2 as. 2 gds. 2 k. 2 kt. share.	Manik Chandra Banerjee.	1,282 12 11	..	462 12 10
173-3	Mahal Uriapara, pargana Calcutta.	..	..	2 as. 2 gds. 2 k. 2 kt. share.	Ditto ..	1,973 7 8	..	575 9 0½
311	Mahal Ektara, pargana Muragachha.	2,670 0 9	Whole	....	Manujendra Krishna Mitra and another.	..	598 0 0	..
312	Mahal Besingha, pargana Muragachha.	8,701 8 10	Do. ..	....	Abani Nath Mukherjee	..	3,194 6 5½	..
322-1	Mahal Alampur, pargana Muragachha.	..	..	12 annas share in each of the mauzas Keshani, Joypur, Jalghara, Nowapara, Maldanga, Sarishapara, Ramnathpur, Ramnagore, Sanpukuria and Hashri and 6 annas share in each of the mauzas Gopinathpur, Parul, Balarampur, Rajballavpur, Gandabere, Gaja Chandipur, Palli and Baru.	Bejoy Kishore Mondal and others.	1,488 4 5	..	397 6 2

Tauzi No.	Name of mahal and pargana.	Sadar jama of whole estate.	Whether the whole estate is to be sold.	If only a share is to be sold, specification of such share or shares.	Names of proprietors of properties to be sold.	If only a share is to be sold, the sadar jama of such share.	If the whole estate is to be sold, the arrears due from it.	If only a share is to be sold, the arrears due from it.
1	2	3	4	5	6	7	8	9
		Rs. a. p.				Rs. a. p.	Rs. a. p.	Rs. a. p.
322-6	Mahal Alampur, parganna Muragachha.	..	..	16 annas share in each of the mauzas Amira, Idia, Kolagachchia, Kamarkuri Jok-tabla, Nahanus Nabashan, Pattpuri, Bado Amires Bendal, Sukdebpur, Sarisha, Bhushna Bungal Kodalia and Mallik-nagar.	Gopal Lal Banerjee and others.	1,310 0 0	..	349 0 0
335	Mahal Iswaripur, pargana Sahanagore.	6,444 15 0	Whole	....	Atul Chandra Mukherjee and another.	..	1,971 15 3½	..
341	Mahal Raipur, pargana Ghar.	6,677 14 0	Do.	....	Atindra Nath Das and others.	..	1,147 8 9	..
351	Mahal Porul, pargana Balia.	8,626 8 6	Do.	....	Surendra Nath Rai	..	1,787 15 0	..
352 R. S.	Mahal Naya Hazari, pargana Balia.	..	..	3 as. 11 gds. 1 kt. 1 dt. share.	Sailendra Nath Das and another.	1,189 6 0	..	414 13 8
353 R. S.	Mahal Nandanpur, pargana Balia.	..	..	8 annas share ..	Jugol Charan Mondal and others.	1,602 0 7	..	546 7 10
355	Mahal Raipur, pargana Balia.	2,745 6 0	Whole	....	Bhola Nath Mondal ..	..	1,427 1 5½	..
381 R. S.	Mahal Alipur, pargana Hatlaghar.	..	..	4 annas share ..	Durga Das Bose ..	2,921 3 7	..	299 4 4
385	Mahal Hudarashkhali, pargana Azimabad.	19,395 7 0	Whole	....	Amarendra Nath Chatterjee and others.	..	6,467 14 4	..
388	Mahal Mayapur, pargana Balia.	8,326 9 0	Do.	....	Kumud Krishna Mandal and others.	..	3,129 2 1	..
389	Mahal Santoshpur, pargana Balia.	9,389 15 0	Do.	....	Naba Krishna Mandal and others.	..	3,829 13 5	..
391	Mahal Gomukhia, pargana Muragacha.	5,538 8 6	Do.	....	Kumud Krishna Mandal and others.	..	1,940 9 7	..
392 R. S.	Mahal Hudajoychandipur, pargana Azimabad.	..	..	1 a. 6 gds. 2 k. 2 kt. share.	Naba Krishna Mandal	692 10 1	..	275 10 0½
392-1	Ditto ..	..	..	4 annas share ..	Ditto ..	2,077 14 0	..	1,081 12 6½
392-3	Ditto ..	..	..	2 as. 13 gds. 1 k. 1 kt. share.	Ditto ..	1,385 4 4	..	719 3 8
392-4	Ditto ..	..	..	1 a. 6 gds. 2 k. 2 kt. share.	Ditto ..	692 10 3	..	275 10 11
392-7	Ditto ..	..	..	2 as. 13 gds. 1 k. 1 kt. share.	Ditto ..	1,385 4 2	..	716 3 1
394	Mahal Kishorepur, pargana Azimabad.	7,108 12 11	Whole	....	Bhola Nath Mandal ..	..	3,191 12 11	..
395 R.S.	Mahal Mahammadpur, pargana Azimabad.	..	..	3 annas share ..	Hemendra Krishna Singha and others.	2,730 9 11	..	600 7 0
395-3.	Ditto ..	..	..	2 annas share ..	Jotindra Krishna Mandal and others.	1,816 15 8	..	527 3 4
395-5.	Ditto ..	..	..	1 anna share ..	Sm. Gouribala Dasi ..	910 3 6	..	200 1 2
403-R.S.	Mahal Patharberia, pargana Azimabad.	..	..	4as. 12gds. 1k. 2kt. 1dt. share	Kumud Krishna Mandal and others.	1,485 12 8½	..	738 8 0
403-2.	Ditto ..	..	..	6as. 13gds. 1k. kt. share.	Ashutosh Santra and another.	2,142 15 11	..	1,065 8 5
613	Mahal Kathuriya, pargana Balia.	855 13 0	Whole	....	Surendra Nath Banerjee and others.	..	164 10 3	..
643	Mahal Paikan, pargana Amirabad.	560 8 0	Do.	....	Narendra Chandra Bose.	..	138 2 4	..

Tauzi No.	Name of mahal and pargana.	Sadar jama of whole estate.	Whether the whole estate is to be sold.	If only a share is to be sold, specification of such share or shares.	Names of proprietors of properties to be sold.	If only a share is to be sold, the sadar jama of such share.	If the whole estate is to be sold, the arrears due from it.	If only a share is to be sold, the arrears due from it.
1	2	3	4	5	6	7	8	9
		Rs. a. p.				Rs. a. p.	Rs. a. p.	Rs. a. p.
1193 R.S.	Mahal Hallsahar, pargana Hallsahar.	..	..	16 annas share in each of the mauzas Ahhirampur, Biswanathpur, Gustia, Joy Krishnapur, Jadavpur Tapanpur, Tentulia, Debibati, Nandanbati, Panpur, Kutabpur Mahisbati, Patimani Kandhar, Bijpur, Balibhara, Bargachia Bhabanipur, Mahadevbati, Madrail, Ranabati, Malaypur, Sankarpur, Raghu Devipur, Balarampur, Ratneswarbati, Alampur, Uttarbera Kanpur, Gopalpur, Ghalghalia, Batia or Baria, Birpara, Mathurabati and Krishnanagar.	Balai Chandra Goswami.	7,031 5 6	..	2,138 15 2½
2049-1.	Mahal Katiara, pargana Ukhra.	..	..	8 annas share ..	Kali Das Nandi and others.	2,143 8 2½	..	454 8 0
2068-1.	Mahal Goal Dob, pargana Ukhra.	..	..	7as. 3gds. 3k. share ..	Siba Das Maitra and others.	1,105 4 10	..	228 8 3
2071	Mahal Hatighata, pargana Ukhra.	620 4 8	Whole	....	Sm. Saralabala Devi	..	126 15 11	..
2149/1	Mahal Kulingram, pargana Ukhra.	..	..	8 annas share ..	Anindra Mohan Banerjee and others.	575 8 7	..	122 15 11
2455 R. S.	Mahal Hallsahar, pargana Hallsahar.	..	..	10 as. 16 gds. 1 k. 1 kt. 2 263/600 dt. share.	Charu Chandra Bhattacharjee and others.	687 4 10	..	202 14 8½
2456	Mahal Krishnapur, pargana Hallsahar.	769 9 8	Whole	....	Sailaja Charan Bhattacharjee and others.	..	309 7 7	..
3040	Mahal Amirpur, pargana Amirpur.	2,907 2 9	Do. ..	....	Sm. Saralabala Devi	..	1,140 3 10	..
1370	Mahal Lot No. 101 Mahmudpur Abad, pargana Sundarbans.	5,516 0 0	Do. ..	....	Ahidhar Ghosh and others.	..	6,254 4 6	..
1441 R. S.	Mahal Lot Nos. 30, 32 and 33 Sundarbans, pargana Sundarbans.	..	..	11 as. 14 gds. 2 k. 2 kt. 3 tils shares.	Girindra Krishna Bose and others.	10,212 13 0	..	161 3 9½
1442 R. S.	Mahal Lot No. 22, pargana Sundarbans.	..	..	3 as. 8 gds. 2 k. 16 tils share.	Harendra Krishna Bose and others.	1,406 12 4	..	171 3 0
1486	Mahal Lot No. 64, pargana Sundarbans.	935 0 0	Whole	....	Bhudeb Nath Agasti and others.	..	234 0 0	..
1487 R. S.	Ditto ..	..	..	12 as. 10 gds. share ..	Bhuban Mohan Roy Chaudhury and others.	796 14 0	..	398 7 0
1491	Mahal Lot No. 61, pargana Sundarbans.	3,734 0 0	Whole	....	Charu Chandra Ghosh and another.	..	934 0 0	..
2711	Mahal western part of Lot No. 36, pargana Sundarbans.	2,557 0 0	Do. ..	....	Khirode Chandra Mandal and others.	..	153 8 0	..
2721 R. S.	Mahal north-western part of Lot No. 16, pargana Sundarbans.	..	..	8 annas share ..	Bijoy Krishna Chakravarty and others.	1,838 8 0	..	229 0 0
2721/1.	Ditto ..	..	..	8 annas share ..	Annada Prosad Mitra	1,838 8 0	..	229 0 0
2733	Mahal middle part of Lot No. 138, pargana Sundarbans.	5,925 0 0	Whole	....	Sushil Kumar Roy Choudhury.	..	1,388 0 0	..
2843	Mahal Lot No. 16, 3rd portion, pargana Sundarbans.	1,492 0 0	Do. ..	....	Sadhan Kumar Bose and others.	..	298 0 0	..
2901	Mahal E Plot, 5th portion, pargana Sundarbans.	669 0 0	Do. ..	....	Sudhir Chandra Jana and others.	..	134 0 0	..
2902	Mahal E Plot, 7th portion, pargana Sundarbans.	986 0 0	Do. ..	....	Sm. Baroda Kumari Dasi.	..	197 0 0	..

Tauzi No.	Name of mahal and pargana.	Sadar jama of whole estate.	Whether the whole estate is to be sold.	If only a share is to be sold, specification of such share or shares.	Names of proprietors of properties to be sold.	If only a share is to be sold, the sadar jama of such share.	If the whole estate is to be sold, the arrears due from it.	If only a share is to be sold, the arrears due from it.
1	2	3	4	5	6	7	8	9
		Rs. a. p.				Rs. a. p.	Rs. a. p	Rs. a. p.
2906	Mahal Lot No. 122, 2nd portion, pargana Sundarbans.	783 0 0	Whole	....	Chandi Charan Laha	..	157 0 0	..
2925	Mahal E Plot, 1st portion, pargana Sundarbans.	1,094 0 0	Do. ..	....	Bhupendra Nath Jana and another.	..	219 0 0	..
2946	Mahal Lot No. 140, 2nd portion, pargana Sundarbans.	1,103 0 0	Do. ..	....	Sm. Mrinalini Palit and another.	..	221 0 0	..
2954	Mahal C Plot, 2nd portion, pargana Sundarbans.	1,035 0 0	Do. ..	....	Sudhir Chandra Jana and others.	..	207 0 0	..
2973	Mahal G Plot, 4th portion, pargana Sundarbans.	898 0 0	Do. ..	....	Satish Chandra Banerjee.	..	180 0 0	..
2977	Mahal Lot No. 117, 2nd portion, pargana Sundarbans.	943 0 0	Do. ..	....	Chandi Charan Laha	..	188 0 0	..
3014	Mahal Lot No. 150	1,040 0 0	Do. ..	....	Sm. Sushila Sundari Bose.	..	208 0 0	..
3026	Mahal 3rd portion of Chak Manasadip, pargana Sundarbans.	2,046 8 0	Do. ..	....	Radha Gobinda Jana	..	409 3 0	..

These estates are being advertised for sale for instalments of revenue which were due on or before the 30th of Agrahayan, 1341 B. S., and of which the latest date of payment was 12th January 1935.

Alipore, the 26th February 1935. [ILLEGIBLE], *for* Collector.

Notification A.

NOTICE is hereby given, under sections 6 and 13, Act XI of 1859, that the undermentioned estates and shares of estates in the district of Pabna will be put up for sale at the office of the Collector of that district on 25th of March 1935, at 12 noon, for arrears of revenue and other demands which by law are realisable as arrears of land revenue.

When in columns, 5, 7 and 9 of the following statement it is stated that only a share is to be sold, it is to be understood that a separate account is kept for that share :—

Tauzi No.	Name of mahal and pargana.	Sadar jama of whole estate.	Whether the whole estate is to be sold.	If only a share is to be sold, specification of such share or shares.	Names of proprietors of property to be sold.	If only a share is to be sold, the sadar jama of such share.	If the whole estate is to be sold, the arrears due from it.	If only a share is to be sold, the arrears due from it.
1	2	3	4	5	6	7	8	9
		Rs. a. p				Rs. a. p.	Rs. a. p.	Rs. a. p.
7	Dehi Haripur, pargana Isafsahi.	1,301 7 0	..	Residuary share—2 as. 13 gds. 1 c. 1 kt. share of Bayrahat, 10 as. 13 gds. 1 c. 1 kt. share of Barangail, China Dhukuria, Dhitpur Kashinagar, Gope Rekhi, Katalia, Paikamakhal *alias* Safaranal, 2 as. 13 gds. 1 c. 1 kt. share of Blandaha *alias* Shahazadpur, Raghunathpur. All other shares than that specified will be excluded from the sale.	Tarakeswar Talukdar and others.	660 12 0	..	270 0 0 Police— 4 0 0
169	K. Durgapur, pargana Isafnagar.	5,575 12 0	..	S. A. No. 16—3 annas share of Durgapur, Daramgaon, Madhupur, Gandharbapur, Chakpirpur, Gangarampur, Jalkar Ghoradaha, Tajurpara, Bilkula, Simalchara, Sorapur, Chak Raghunathpur, Char Durgapur, Padmabilla, Sharupai *alias* Jola Bil Sharupai, 6 annas of Chak Golakpur, Chak Hapania, Sharuppur Laksmikol, Hapani and Faradpur, 8 gd. 2 kg. of Atalkula, 16 annas of Gobindapur and Mahmudpur, 3 c. 3 kg. 2 $\frac{802}{54249}$ tils share of Tailkupi Jote Daria Khan, 16 annas of Baniabaha, 1 a. 19 gds. 1 kg. 11 $\frac{8033}{18477}$ tils of Mahibaria, 10 gds. 12 $\frac{17692}{116659}$ tils of Madhupur with Jote Daria Khan, 1 kg. 3 tils of Raghunathpur with Majpara and Putigachha, 8 gds. 2 kg. of Chandi Satak and Jote Jagir. All other shares than that specified will be excluded from the sale.	Radharani Debi, mother and guardian of Pranab Gobinda Chaudhury, sebait of Iswar Gobinda Roy Bigraha.	784 0 0	..	516 7 0
67	K. Pindarhati and others, pargana Sinduri.	654 1 0	..	Residuary share—16 annas share of Raninagar, 2 annas share of Saithupi, 16 annas share of Arkandi and Dalkandi Pukhariapar Chak Jote Mudafat Pukhariapar, Jalkar Potazia, Pindarhati, Sachania, Kismat, Paiksha, Gopalpur and Sarisha. All other shares than that specified will be excluded from the sale.	Gopeswar Saha and others.	551 8 0	..	37 1 9 Police— 2 7 6
205	Chak Gobindapur, pargana Katar Mahal.	1,560 0 0	Whole	....	Mir Jaynal Abdin and others.	..	281 3 0 Police— 5 2 3	..
248	K. Bayera, pargana Katar Mahal.	3,059 10 0	..	S. A. No. 2—4 annas share of the entire estate. All other shares than that specified will be excluded from the sale.	Kamala Prasad Sukul.	764 15 0	..	312 13 0
2182	Dehi Kashipur, pargana Mehamansahi.	3,659 12 0	..	S. A. No. 1—4 annas share of the estate. All other shares than that specified will be excluded from the sale.	Radhica Mohan Munshi and others.	914 15 0	..	438 14 9 Police— 2 2 0

Tauzi No.	Name of mahal and pargana.	Sadar jama of whole estate.	Whether the whole estate is to be sold.	If only a share is to be sold, specification of such share or shares.	Names of proprietors of property to be sold.	If only a share is to be sold, the sadar jama of such share.	If the whole estate is to be sold, the arrears due from it.	If only a share is to be sold, the arrears due from it.
1	2	3	4	5	6	7	8	9
		Rs. a. p.				Rs. a. p.	Rs. a. p.	Rs. a. p.
2182	Dehi Kashipur, pargana Mehamansahi.	3,659 12 0	..	S. A. No. 3.—14gds. 2c. 2kt. share of the estate. All other shares than that specified will be excluded from the sale.	Shyama Kishore Munshi and others.	167 12 1	..	109 14 6 Police— 0 14 1
2182	Ditto ..	3,659 12 0	..	S. A. No. 4—4gds. 2c. 2kt. share of the estate.	Jnanoda Sankar Sanyal and others.	53 14 0	..	35 5 7
2182	Ditto ..	3,659 12 0	..	S. A. No. 5—3 annas share of the estate. All other shares than that specified will be excluded from the sale.	Gobinda Bandhu Datta and others.	686 3 5	..	253 15 1 Police— 0 1 8
2182	Ditto ..	3,659 12 0	..	S. A. No. 6—10 gandas share of the estate. All other shares than that specified will be excluded from the sale.	Krisna Chandra Bhaumik.	114 6 0 1,937 2 6	..	42 7 0 Police— 1 1 0
175	T. Shyampur, pargana Amirabad.	3,156 9 0	Whole	....	Surendra Krisna Datta and others.	..	1,583 3 0	..
148	K. Birahimpur, pargana Birahimpur.	6,759 11 0	..	Residuary share—13as. 15gds. share of Ambaria, Bhati Raghunathpur, Golabari and Gopalbari, Gobinda-Kartic *alias* Bhulapara, Magurali, Mukundabari Palksha, Ramnagar, Dharai, Guchhagaon, Natibpur, 10 annas share of Parachala, 4 annas share of Raninagar and Takigara, 4as. 10gds of Ruppur with jote Nabakanta Sanyasi. All other shares than that specified will be excluded from the sale.	Gopikrisna Saha ..	3,284 0 0	..	1,853 2 0 Police— 19 5 0
121	Dehi Fulbari, pargana Bajurash Mahabbatpur.	778 0 10	Whole	....	Asia Khatun, wife of A. M. Abdul Hamid.	..	8 9 0	..

These estates are being advertised for sale for instalments of revenue which were due on or before the 30th Agrahayan, 1341 B.S., of which the latest date of payment was 12th January 1935.

J. L. NANDI, *for* Collector.

Pabna, the 25th February 1935.

Notification A.

NOTICE is hereby given, under sections 6 and 13, Act XI of 1859, that the undermentioned estates and shares of estates in the district of Bakarganj will be put up for sale at the office of the Collector of that district on the 25th March 1935, at 12 noon, for arrears of revenue and other demands which by law are realizable as arrears of land revenue :—

Tauzi No.	Name of mahal and pargana.	Sadar jama of whole estate.	Whether the whole estate is to be sold.	If only a share is to be sold, specification of such share or shares.	Names of proprietors of property to be sold.	If only a share is to be sold, the sadar jama of such share.	If the whole estate is to be sold, the arrears due from it.	If only a share is to be sold, the arrears due from it.
1	2	3	4	5	6	7	8	9
		Rs. a. p.					Rs. a. p.	
4538	Taluk No. 2/1-2 in Abad Taktabunia, pargana Sunderban.	11,134 0 0	Whole	....	Harendra Kumar Roy Choudhury and others.	..	34,052 8 0	..
4569	Osat Taluk No. 2 in Chak Hazikhali, pargana Sunderban.	574 9 0	Do. ..	....	Mr. C. F. D'Silva ..	..	474 9 0	..
4609	Taluk No. 1-1 in Abad Lalua, pargana Sunderban.	17,538 0 0	Do. ..	....	Barada Charan Datta and others.	..	24,614 0 0	..
4643	Taluk No. 2 in Bazarghona, pargana Sunderban.	7,611 0 0	Do. ..	....	Hem Kanta Sen Roy Choudhury and others.	..	2,784 9 11	..
4657	Abadkari Jote No. 35 in Char Badna, pargana Jazira.	805 10 0	Do. ..	....	Shamsul Hossain Choudhury and others.	..	380 10 0	..
4791	Abadkari Jote No. 101 in Char Nipattasi, pargana Jazira.	876 0 0	Do. ..	....	Abdul Gafur and others.	..	1,513 0 0	..
4791	Abadkari Jote No. 268 in Char Nipattasi, pargana Jazira.	777 14 0	Do. ..	....	Mathuranath Bagal and others.	..	1,415 0 8	..
4828	Taluk No. 1(A) in Abad Chhota Baishdia, pargana Sunderban.	16,638 0 0	Do. ..	....	Lakhshmi Charan De Sarkar and others.	..	7,021 6 0	..
5007	Howla No. 134 in Chak Dhalua, pargana Sunderban.	1,691 12 0	Do. ..	....	Abdur Rohman and others.	..	891 12 0	..
5007	Howla No. 312 in Chak Dhalua, pargana Sunderban.	753 2 0	Do. ..	....	Afseruddin Howladar.	..	398 2 0	..
5007	Howla No. 372 in Chak Dhalua, pargana Sunderban.	999 11 0	Do. ..	....	Soleman ..	..	464 11 0	..
5007	Howla No. 418 in Chak Dhalua, pargana Sunderban.	1,785 7 0	Do. ..	....	Jabbaruddi and others.	..	485 7 0	..
5007	Howla No. 565 in Chak Dhalua, pargana Sunderban.	870 14 0	Do. ..	....	Faizuddin and others.	..	188 4 0	..
5007	Howla No. 626 in Chak Dhalua, pargana Sunderban.	1,139 2 0	Do. ..	....	Sekandar Ali ..	..	1,146 11 0	..
5007	Howla No. 741 in Chak Dhalua, pargana Sunderban.	829 10 0	Do. ..	....	Sarada Charan De Sarkar.	..	329 10 0	..
5007	Howla No. 84 in Chak Dhalua, pargana Sunderban.	1,906 13 0	Do. ..	....	Munga Khan and others.	..	1,056 13 0	..
5007	Howla No. 188 in Chak Dhalua, pargana Sunderban.	831 2 0	Do. ..	....	Dakhshmina Ranjan Gope.	..	481 2 0	..
5007	Howla No. 26 in Chak Dhalua, pargana Sunderban.	503 6 0	Do. ..	....	Abdul Quddus and others.	..	253 6 0	..
5007	Howla No. 60 in Chak Dhalua, pargana Sunderban.	560 13 0	Do. ..	....	Jabbaruddin and others.	..	330 13 0	..
5007	Howla No. 85 in Chak Dhalua, pargana Sunderban.	828 3 0	Do. ..	....	Ditto ..	..	403 3 0	..

Tauzi No.	Name of mahal and pargana.	Sadar jama of whole estate.	Whether the whole estate is to be sold.	If only a share is to be sold, specification of such share or shares.	Names of proprietors of property to be sold.	If only a share is to be sold, the sadar jama of such share.	If the whole estate is to be sold, the arrears due from it.	If only a share is to be sold, the arrears due from it.
1	2	3	4	5	6	7	8	9
		Rs. a. p.					Rs. a. p.	
5007	Howla No. 247 in Chak Dhalua, pargana Sunderban.	655 12 0	Whole ..	....	Buzruk Ali and others.	..	255 12 0	..
5007	Howla No. 54 in Chak Dhalua, pargana Sunderban.	645 1 0	Do. ..	....	Ketaruddi and others.	..	311 1 0	..
5007	Howla No. 117 in Chak Dhalua, pargana Sunderban.	692 12 0	Do. ..	....	Osimuddi and others	..	337 12 0	..
5007	Howla No. 253 in Chak Dhalua, pargana Sunderban.	673 14 0	Do. ..	....	Abdul Quddus and others.	..	411 11 0	..
5007	Howla No. 357 in Chak Dhalua, pargana Sunderban.	619 6 0	Do. ..	....	Abi Abdulla Khan and others.	..	279 6 0	..
5007	Howla No. 748 in Chak Dhalua, pargana Sunderban.	508 14 0	Do. ..	....	Dakhshmina Ranjan Gope.	..	208 14 0	..
5007	Howla No. 835 in Chak Dhalua, pargana Sunderban.	516 13 0	Do. ..	....	Sonomuddin and others.	..	232 13 0	..
5008	Howla No. 2 in Chak Barguna, pargana Sunderban.	1,197 2 0	Do. ..	....	Abdul Karim and others.	..	892 2 0	..
5008	Howla No. 46 in Chak Barguna, pargana Sunderban.	1,266 4 0	Do. ..	....	Afoluddi and others	..	510 4 0	..
5008	Howla No. 119 in Chak Barguna, pargana Sunderban.	1,797 14 0	Do. ..	....	Indubhusan Kapali and others.	..	842 14 0	..
5008	Howla No. 310 in Chak Barguna, pargana Sunderban.	610 11 0	Do. ..	....	Osman Ali and others.	..	301 11 0	..
5008	Howla No. 344 in Chak Barguna, pargana Sunderban.	1,088 10 0	Do. ..	....	Gagan Howladar and others.	..	346 10 0	..
5008	Howla No. 378 in Chak Barguna, pargana Sunderban.	1,089 8 0	Do. ..	....	Hashem Howladar and others.	..	439 8 0	..
5008	Howla No. 407 in Chak Barguna, pargana Sunderban.	573 12 0	Do. ..	....	Tazu Khan and others.	..	513 12 0	..
5008	Nim Howla No. 445 in Chak Barguna, pargana Sunderban.	1,135 12 0	Do. ..	....	Dinobandhu apali and others.	..	485 12 0	..
5008	Howla No. 647 in in Chak Barguna, pargana Sunderban.	1,405 4 0	Do. ..	....	Sarada Charan De Sarkar.	..	750 4 0	..
5008	Howla No. 771 in Chak Barguna, pargana Sunderban.	1,294 6 0	Do. ..	....	Mohammad Yusuf Sikder.	..	1,430 6 0	..
5008	Howla No. 224 in Chak Barguna, pargana Sunderban.	1,773 11 0	Do. ..	....	Meheruddi and others.	..	619 11 0	..
5008	Howla No. 352 in Chak Barguna, with Howla No. 993 in mauza Hellbunda, pargana Sunderban.	1,420 7 0	Do. ..	....	Sarada Charan De Sarkar.	..	160 7 0	..
5008	Nim Howla No. 396 in Chak Barguna, pargana Sunderban.	542 4 0	Do. ..	....	Sonamuddi ..	..	280 4 0	..
5008	Howla No. 12 in Chak Barguna, pargana Sunderban.	876 11 0	Do. ..	....	Abani Mohan Choudhury and others.	..	177 11 0	..
5008	Howla No. 65 in Chak Barguna, pargana Sunderban.	597 2 0	Do. ..	....	Adam Ali and others.	..	285 2 0	..

Tauzi No.	Name of mahal and pargana.	Sadar jama of whole estate.	Whether the whole estate is to be sold.	If only a share is to be sold, specification of such share or shares.	Names of proprietors of property to be sold.	If only a share is to be sold, the sadar jama of such share.	If the whole estate is to be sold, the arrears due from it.	If only a share is to be sold, the arrears due from it.
1	2	3	4	5	6	7	8	9
		Rs. a. p.					Rs. a. p.	
5008	Howla No. 99 in Chak Barguna, pargana Sunderban.	600 8 0	Whole ..	....	Adam Ali and others	..	117 8 0	..
5008	Howla No. 236 in Chak Barguna, pargana Sunderban.	691 5 0	Do. ..	....	(গয়াজদ্দি) Goyazuddi and others.	..	161 5 0	..
5008	Howla No. 296 in Chak Barguna, pargana Sunderban.	674 2 0	Do. ..	....	Gagan and others	..	172 5 0	..
5008	Howla No. 333 in Chak Barguna, pargana Sunderban.	500 15 0	Do. ..	....	Ditto ..	..	251 15 0	..
5008	Howla No. 365 in Chak Barguna, pargana Sunderban.	595 0 0	Do. ..	....	Ditto ..	..	240 0 0	..
5008	Howla No. 404 in Chak Barguna, pargana Sunderban.	793 7 0	Do. ..	....	Azharuddin Ahmad	..	276 7 0	..
5008	Howla No. 517 in Chak Barguna, pargana Sunderban.	552 15 0	Do. ..	....	Dwarika Nath Sen and others.	..	106 1 3	..
5008	Howla No. 565 in Chak Bargura, pargana Sunderban.	582 6 0	Do. ..	....	Prosanna Kumar Das and others.	..	253 6 0	..
5008	Howla No. 691 in Chak Barguna, pargana Sunderban.	753 3 0	Do. ..	....	Maga Khan and others.	..	328 3 0	..
5008	Howla No. 920 in Chak Barguna, pargana Sunderban.	837 15 0	Do. ..	....	Raimohan De ..	..	122 15 0	..
5008	Howla No. 1002 in Chak Barguna, pargana Sunderban.	1,879 1 0	Do. ..	....	Saroda Charan De Sarkar.	..	788 1 0	..
5008	Howla No. 1048 in Chak Barguna, pargana Sunderban.	1,107 14 0	Do. ..	....	Hamizuddi and others.	..	553 14 0	..
5008	Howla No. 4 in Chak Barguna, pargana Sunderban.	1,029 6 0	Do. ..	....	Abanimohan Choudhury and others.	..	336 6 0	..
5008	Howla No. 55 in Chak Barguna, pargana Sunderban.	2,815 15 0	Do. ..	....	Akhoy Kumar Saha and others.	..	1,585 15 0	..
5008	Howla No. 135 in Chak Barguna, pargana Sunderban.	511 11 0	Do. ..	....	Abdul Latif and others.	..	70 7 0	..
5008	Howla No. 173 in Chak Barguna, pargana Sunderban.	580 14 0	Do. ..	....	Mohammad Kalu and others.	..	155 14 0	..
5008	Howla No. 227 in Chak Barguna, pargana Sunderban.	1,040 10 0	Do. ..	....	Dakhshmina Ranjan Gope.	..	478 10—0	..
5008	Howla No. 534 in Chak Barguna, pargana Sunderban.	1,040 10 0	Do. ..	....	Tuzamber Ali and others.	..	540 7 6	..
5008	Howla No. 633 in Chak Barguna, pargana Sunderban.	1,700 12 0	Do, ..	....	Fatik Howlader and others.	..	626 12 0	..
5008	Howla No. 667 in Chak Barguna, pargana Sunderban.	503 3 0	Do. ..	....	Raimohan De and others.	..	151 3 0	..
5008	Howla No. 491 in Chak Barguna, pargana Sunderban.	628 13 0	Do. ..	....	Hachanaddi and others.	..	197 5 6	..
5008	Howla No. 545 in Chak Barguna, pargana Sunderban.	697 14 0	Do. ..	....	Sasi Kumar and others.	..	295 14 0	..

Tauzi No.	Name of mahal and pargana.	Sadar jama of whole estate.	Whether the whole estate is to be sold.	If only a share is to be sold, specification of such share or shares.	Names of proprietors of property to be sold.	If only a share is to be sold, the sadar jama of such share.	If the whole estate is to be sold, the arrears due from it.	If only a share is to be sold, the arrears due from it.
1	2	3	4	5	6	7	8	9
		Rs. a. p.					Rs. a. p.	
5008	Howla No. 41 in Chak Barguna with Howla No. 38 in mauza Puler Baliatali, pargana Sunderban.	597 10 0	Whole ..	....	Afseruddin and others.	..	307 10 0	..
5008	Howla No. 80 in Chak Barguna, pargana Sunderban.	649 13 0	Do. ..	....	Dhalai and others ..	..	251 15 0	..
5008	Howla No. 153 in Chak Barguna, pargana Sunderban.	740 10 0	Do. ..	....	Hachan Ali and others.	..	66 0 0	..
5215	Howla No. 349 in Char Madhupura, pargana Jazira.	1,086 0 0	Do. ..	....	Chand Bibi and others.	..	311 12 4	..
5215	Howla No. 745 in Char Madhupura, pargana Jazira.	2,571 2 0	Do. ..	....	Sushamabala Debi	..	2,371 2 0	..
5216	Howla No. 1460 in Char Bairagia, pargana Jazira.	2,702 10 0	Do. ..	....	Probhash Chandra Dutta.	..	2,430 6 4	..
5235	Howla No. 19 in Char Tabgi, pargana Jazira.	4,931 3 0	Do. ..	....	Mohesh Chandra Podder.	..	1,933 11 6	..
5230	Howla No. 16 in Dhaligaurnagar, pargana Jazira.	586 10 0	Do. ..	....	Sachindra Kumer Mitra.	..	236 10 0	..
5245	Howla No. 175 in Chak Lalmohan, pargana Jazira.	1,012 4 0	Do. ..	....	Ukiluddin Patowari and others.	..	891 2 8	..
5246	Howla No. 202 in Dhaligaurnagar, pargana Dakhshmin Sahabajpur.	976 14 0	Do. ..	....	Harinarayan Saha	..	278 7 0	..
5246	Howla No. 254 in Dhaligaurnagar with Howla No. 912 in mauza Chatla, pargana Dakhshmin Sahabajpur.	1,375 13 0	Do. ..	....	Badsha Mia and others.	..	1,375 13 0	..
5257	Howla No. 2 in Char Krishtaprosad, pargana Jazira.	7,840 15 0	Do. ..	....	Murari Mohan Mukherjee.	..	6,590 15 0	..
6497	Taluk No. 2 in Chak Nattona part II, pargana Sunderban.	4,281 0 0	Do. ..	....	Harsha Mohan Niogi.	..	1,181 0 0	..
6569	Osat Howla No. 12 in Char Fasson, pargana Jazira.	769 0 0	Do. ..	....	Jalal Ahmad and others.	..	194 0 0	..

The above tenures are being advertised for sale for the instalments of revenue which were due on or before 30th Falgoon, 1340 B.S. of which the latest date of payment was 28th March 1934.

Barisal, the 26th February 1935.

Md. MAHMUD, Addl. Collector.

Notification A.

NOTICE is hereby given, under sections 6 and 13, Act XI of 1859, that the undermentioned estates and shares of estates in the district of Midnapore, will be put up to sale at the office of the Collector of that district on the 25th March 1935, at 12 noon, for arrears of revenue and other demands which by law are realizable as arrears of land revenue.

When in columns 5, 7 and 9 of the following statement it is stated that only a share is to be sold, it is to be understood that a separate account is kept for that share :—

Tauzi number.	Name of mahal and pargana.	Sadar jama of whole estate.	Whether the whole estate is to be sold.	If only a share is to be sold, specification of such share or shares.	Names of proprietors of property to be sold.	If only a share is to be sold, the sadar jama of such share.	If the whole estate is to be sold, the arrears due from it.	If only a share is to be sold, the arrears due from it.
1	2	3	4	5	6	7	8	9
		Rs. a. p.				Rs. a. p.	Rs. a. p.	Rs. a. p.
301	Pargana Batitaki, mahal Gumai.	653 0 1	Entire	....	Santosh Jamini Dassi and others, auction purchaser Surendra Nath Setua.	..	275 0 2	..
312	Pargana Batitaki, mahal Palgoria.	630 1 7	Do. ..	....	Sree Kisan Darghar and Kedar Nath Pal and another, sebaits of Lakshmi Janardanjew Thakur.	..	217 10 0	..
389	Pargana Bhuianmutha, mahal Paschim Masaria *alias* Betalghatial.	3,620 11 8	..	Residuary Account— 4as. 8gds. 3c. 1kt. 2dt. share of mauza Bakibarh. 5as. 6gds. 2c. 2kt. share of mauzas Betal and Khatian. 2as. 13gds. 1c. 1kt. share of mauzas Chinadari, Dwarikapur, Katgechia, Kotebarh, Masaria Paschim, Mirachak and Simulya Madhya. 4as. 8gds. 3c. 1kt. 1dt. share of mauzas Kishorepur, Khatian and Masariapurba. All other shares than that specified will be excluded from sale.	Nagendra Kumar Hazra and others.	1,307 9 0	..	154 7 5
440	Pargana Chandrakona, mahal Baraberia.	10,925 8 5	..	S. A. No. 2—16 annas share of mauzas Kamargeria and Kamargeria Kismat. All other shares than that specified will be excluded from sale.	Khudiram Mukhapadhya and others.	1,813 6 6	..	679 5 0
478	Pargana Chandrakona, mahal Kuldaha.	10,784 7 2	..	S. A. No. 2—2as. 2gds. 2c. 2kt. share of the mahal. All other shares than that specified will be excluded from the sale.	Khirode Prosad Chakravarty and others.	1,457 14 10	..	104 11 5
510	Pargana Chandrakona, mahal Rameswarpur.	11,594 11 8	Entire	....	Manahar Lal Seal	..	4,326 11 8	..
548	Pargana Chetua, mahal Gangpur.	8,143 13 10	Do. ..	....	Janakilal Khandelwala.	..	3,058 12 0	..
558	Pargana Chetua, mahal Gaura.	4,449 9 11	..	Residuary Account— 5as. 11gds. 2c. 1kg. 13til share of mauzas Gaura Kuchmari and Jagatchak. 5as. 9gds. 2c. 3kg. 4til share of mauza Nandanpur. 5as. 11gds. 2c. 1kg. 16til share of mauza Jalalpur. 4as. 11gds. 2c. 1kg. $17\frac{1}{24}$til. 1c. 1kg. 1 til share of mauza Singhachak. 4as. 11gds. 2c. 1kg. $17\frac{1}{24}$ til; 2c. 1til share of mauza Jotegobordhan. 5 as. 9 gds. 2 c. 3 kgs. $8\frac{1}{2}$ tils. 1 c. 7 tils. 1 c. of mauza Kismat Saila. 5 as. 9 gds. 2 c. 3 kgs. $7\frac{1}{2}$ til. 3 c. 7 til. 1 c. share of mauza Chakdinu. 8 as. 4 gds. 2 c. 2 kg. $14\frac{1}{2}$ til 1 c. 2 kg. 9 til 1 c. 3 kg. share of mauza Barbharatpur. All other shares than that specified will be excluded from sale.	Debendranath Ghose, auction purchaser Probodh Chandra Chaudury, R. A. No. 2.	1,541 1 10	..	575 4 0

Tauzi number.	Name of mahal and pargana.	Sadar jama of whole estate.	Whether the whole estate is to be sold.	If only a share is to be sold, specification of such share or shares.	Names of proprietors of property to be sold.	If only a share is to be sold, the sadar jama of such share.	If the whole estate is to be sold, the arrears due from it.	If only a share is to be sold, the arrears due from it.
1	2	3	4	5	6	7	8	9
		Rs. a. p.				Rs. a. p.	Rs. a. p.	Rs. a. p.
745	Pargana Egrachore, mahal Kasba.	854 9 0	..	Residuary Account—10 annas share of mauzas Alnan, Dabetya, Damodartiram, Giridharpur, Jamgan, Kasba, Kashapatna, Kamardiha, Kaurda, Laskarpur, Latifabad, Muhammedpur, Neyaribara, Parusattampur, Raghutiran and Salfalchak. 13 as. 2 gds. 1 c. 1 kt. share of mauza Bajarpur. 16 annas share of mauza Satarang. All other shares than that specified will be excluded from sale.	Lalit Mohan Pal and others.	768 7 9	..	75 3 7
937	Pargana Kasijora, mahal Garhpurusattampur *alias* Chaitanyapur.	738 10 8	..	Residuary Account—12 as. 16 gds. share of the estate. All other shares than that specified will be excluded from sale.	Trailakhya Nath Maiti.	590 14 8	..	187 15 5
969	Pargana Kasijora, mahal Kisore Chak.	579 4 5	Entire	....	Lakshmi Janardan Jew, sebait Bishnupada Kole and another.	..	197 5 0	..
1007	Pargana Kasijora, mahal Purba Itara.	13,136 8 8 (including Police).	..	Residuary Account—4 annas share of the mahal. All other shares than that specified will be excluded from sale.	Manahar Lal Seal ..	10,783 11 10 (including Police).	..	3,707 3 8 (including Police).
1039	Pargana Kismat Kasijora, mahal Gopalnagar.	1,511 0 9	..	Residuary Account—5 as. 6 gds. 2 c. 2 kt. share of the estate. All other shares than that specified will be excluded from sale.	Haripada Maiti and another.	503 10 11	..	172 2 10
1039	Ditto ..	1,511 0 9	..	S. A. No. 1.—5 as. 6 gds. 2 c. 2 kt. share of the estate. All other shares than that specified will be excluded from sale.	Bhupati Charan Jana and another.	503 10 11	..	173 0 11
1039	Ditto ..	1,511 0 9	..	S. A. No. 2—5 as. 6 gds. 2 c. 2 kt. share of the estate. All other shares than that specified will be excluded from sale.	Bhubanmohan Jana and others.	503 10 11	..	172 15 10
1048	Pargana Kasijora, mahal Kanakpur, *alias* Narendra Kanakpur.	2,388 13 6 including Police.	..	S. A. No. 12—3 as. 13 gds. 1 c. 1 kt. share of the estate. All other shares than that specified will be excluded from sale.	Fakir Chandra Das and others.	546 4 9 including Police.	..	187 12 7 including Police.
1196	Pargana Kedarkundu, mahal Gogram.	724 12 0	..	Residuary Account—16 annas share of mauzas Dayalpur, Gopinathpur, Hridayramchak, Keutburhi Patgerhe, Rajaramchak, Sagarchak and Sutchhuhachak. All other shares than that specified will be excluded from sale.	Narendra Kumar Nag.	573 13 4	..	0 9 0
1485	Pargana Khandar, mahal Belki *alias* Bar Raghunath.	875 9 3	Entire	....	Rashmoni Atta and others.	..	302 13 3	..
1660	Pargana Khandar, mahal Panchpara.	4,053 11 5	..	S. A. No. 10—2 as. 1 gd. 3 c. 2 kt. share of mauzas Abdulya, Arun, Arunchak, Fatechak, Jamna, Kamalchak and Ranihati. 5 as. 6 gds. 2 c. 2 kt. share of mauzas Baragoria, Barampur, Basudebchak, Bhabanichak, Bhisandapur, Dehati, Gourangachak, Jatalia, Jotejan, Kanuchak, Kanua, Khelna, Madhyajetha, Maguria Sana, Norattamchak, Nakpura, Narayan, Bhulanchak, Palashchak, Panchpara, Paniaiulya, Ramdebchak, Sarupchak, Sankarbarh, Satrangiharibarh, Simlagera, Shyamchakbar, Shyamsundarpur and Trilochanpur.	Dhirendra Nath Ghose and another.	982 11 0	..	337 12 7

Tauzi No.	Name of mahal and pargana.	Annual land revenue of whole estate.	Whether the whole estate is to be sold.	If only a share is to be sold, specification of such share or shares.	Names of proprietors of property to be sold.	If only a share is to be sold, the sadar jama of such share.	If the whole estate is to be sold, the arrears due from it.	If only a share is to be sold, the arrears due from it.
1	2	3	4	5	6	7	8	9
		Rs. a. p.				Rs. a. p.	Rs. a. p.	Rs. a. p.
				2 as. 13 gds. 1 c. 1 kt. share of mauzas Basantapur, Binodechak, Gokulpur, Lakshmia, Madhusudanchak, Monoharchak, Palgokul, Pithalchak, Rasikchak, Raichak and Salamdi. 4 as. 15 gds. 1 c. share of mauzas Jorura and Mahadichak. All other shares than that specified will be excluded from sale.			
1995	Pargana Narayangarh Kismat, mahal Khelari *alias* Banpatna.	3,415 1 7	..	Residuary Account—16 annas share of mauzas Balaramchak, Banpatna, Bagberya, Ballgerya, Benapuradihi, Bhagabanpur, Chaita, Kuchiabhaluk, Khalaridihi, Nischindipur, Parijatnagar, Purusuttomchak, Prempara, Raghunathpur, Ralpur, Sikharpari. 5 as. 6 gds. 2 c. 2 kt. share of mauzas Alichak, Deulabarh, Harachak, Kaltpur, Kalikachak, Madhuchak, Mondalagerha, Madhabchak, Nekragera, Panguchota, Satrughnabarh, Santalchak and Uchhabanadabarh. 10 as. 13 gds. 1 c. 1 kt. share of mauzas Bagrabej, Brahmanibera, Hirapari, Hiraparikist, Kaimkhan, Kaimchak, Kalidasbhera, Khatrageryachak, Lohabaranchak, and Tatara. All other shares than that specified will be excluded from sale.	Chowdhury Biswambar Das Prahraj Mohapatra and others.	2,441 1 2	..	0 0 11
2243	Pargana Sabang, mahal Murarichak.	666 3 5	Entire	....	Tarak Nath Maiti and others.	..	230 0 0	..
2327	Pargana Sabang, mahal Sabang *alias* Khelna, Kasba, Balarampur.	1,128 10 0	Do. ..	....	Binode Behari Kundu Chaudhuri and another.	..	354 12 1	..
2338	Pargana Sabang, mahal Seulipur.	861 13 4	..	Residuary Account— 16 annas share of mauzas Binandachak, Bhatbarh, Gotegerya, Ghasichak, Kakdapara, Kerurbarh, Kajichak, Negalkata, Monoharpur, Monoharpur Khalpar, Salmarabara, Salmarachhoto, Seulipur, Birbhanpur Paschim, Chalukhuri, Durgaprosadchak, Gopalchak, Narayanbarh, Pakuriachak, Raghunathchak, Sallabheri, Bhanjapur, Markandachak, Gopalbarh and Sadhuiyapur. 4 as. 10 gds. share of mauzas Kalyanpur and Roypur. All other shares than that specified will be excluded from sale.	Debiprosad Bhakat and others. Auction purchasers Jogendra Nath Das and others.	726 12 9	..	250 5 3
3070	Pargana Mandalghat, mahal Ramjungle.	19,255 3 6	..	S. A. No. 9—2 as. 5 gds. share of the mahal. All other shares than that specified will be excluded from sale.	Monohar Lal Seal ..	2,708 9 0	..	1,016 11 2
3070	Ditto ..	19,255 3 6	..	S. A. No. 10—2 as. 5 gds. share of the mahal. All other shares than that specified will be excluded from sale.	Tarak Lal Seal and another.	2,708 8 9	..	1,016 10 10
				Part II.				
2816	Pargana Naruamutha, mahal Naruamutha, Jalpal, Khaspatit, etc.	12,753 8 0	..	Residuary Account—10 as. 2 gds. 2 c. 2 kt. share of the mahal. All other shares than that specified will be excluded from sale.	Biraja Charan Nanda and others.	8,077 5 0	..	584 9 6

Midnapore, the 26th February 1935.

J. C. BANERJI, *for* Collector.

Notification B.

NOTICE is hereby given, under sections 5 and 13, Act XI of 1859, that unless the arrears which were due on or before the 31st Bhadra, 1340 B.S., 29th Agrahayan, 1340 B.S., 30th Falgun, 1340 B.S. and 32nd Jaistha, 1341 B.S. and of which the latest date of payment was on the 5th October 1933, 12th January 1934, 28th March 1934, 28th June 1934, and which will be due on or before the 30th Falgun, 1341 B.S., and of which the latest date of payment will be on the 28th March 1935, mentioned below are paid on or before the next latest date of payment, viz., the 28th March 1935, the undermentioned estates or shares of estates in the district of Midnapore will be put up for sale at the office of the Collector of that district on the 25th June, 1935 at 12 noon for the said arrears.

When in columns 5, 7 and 9 of the following statement it is stated that only a share is to be sold, it is to be understood that a separate account is kept for that share :—

Tauzi No.	Name of mahal and pargana.	Sadar jama of whole estate.	Whether the whole estate is to be sold.	If only a share is to be sold, specification of such share or shares.	Names of proprietors of property to be sold.	If only a share is to be sold, the sadar jama of such share.	If the whole estate is to be sold, the arrears due from it.	If only a share is to be sold, the arrears due from it.	Nature and amount of demand for which to be sold.
1	2	3	4	5	6	7	8	9	10
		Rs. a. p.				Rs. a. p.		Rs. a. p.	Rs. a. p.
2039	Pargana Purusattompur, mahal Purusottompur.	6,679 8 11	..	S. A. No. 5— 1a. 4 pies share of the mahal. All other shares than that specified will be excluded from the sale.	Taranath Lahiri and another.	556 10 1	..	555 9 8 from September 1933 to June 1934.	Land Rev. for Sept. 1933— 42 7 4 Jan. 1934 — 191 5 4 March 1934— 260 15 3 June 1934— 60 13 9 555 9 8 Land Rev. for March 1935— 260 15 3 Cess— 24 14 6 841 7 5

Midnapore, the 26th February 1935.

J. C. BANERJI, *for* Collector.

Notification A.

NOTICE is hereby given, under sections 6 and 13, Act XI of 1859, that the undermentioned estates and shares of estates in the district of Dinajpur, will be put up for sale at the office of the Collector of that district on the 26th March 1935, at 12 noon, for arrears of revenue and other demands which by law are realizable as arrears of land revenue.

When in columns 5, 7 and 9 of the following statement it is stated that only a share is to be sold, it is to be understood that a separate account is kept for that share :—

Tauzi No.	Name of mahal and pargana.	Sadar jama of whole estate.	Whether the whole estate is to be sold.	If only a share is to be sold, specification of such share or shares.	Names of proprietors of property to be sold.	If only a share is to be sold, the sadar jama of such share.	If the whole estate is to be sold, the arrears due from it.	If only a share is to be sold, the arrears due, from it.
1	2	3	4	5	6	7	8	9
		Rs. a. p.				Rs. a. p.	Rs. a. p.	Rs. a. p.
67	Mahal Nagendra Behari Roy Chaudhury, pargana Jhapartail.	5,054 4 0	Yes ..	..	Nagendra Behari Roy Chaudhury.	..	1,389 0 0	..
68	Mahal Ghanashyampur, pargana Salbari.	6,374 11 8	Shares mentioned in column 5 will be put up to sale together.	6 as. 10 g. residuary share.	Girija Bollav Chaudhury.	2,589 11 8	..	706 11 7
				9 as. 10 g., separate account No. 2.	Nagendra Behari Roy Chaudhury.	3,785 0 0	..	1,032 0 0
105	Mahal Ghoraband, pargana Deora.	5,737 4 6	Yes ..	..	Murali Mohan Sen and others.	..	2,218 0 0	..
114	Mahal Brajaballavpur, pargana Dhanjore.	8,348 3 2	Shares mentioned in column 5 will be put up to sale together.	8 annas residuary share.	Debesh Chandra Mukhapadhyaya.	4,174 1 7	..	155 7 10
				8 annas, separate account No. 1.	Binoy Krishna Banerjee.	4,174 1 7	..	155 7 10
169	Mahal Gachhatta, pargana Bajitpur.	7,155 8 0	No ..	2 as. 13 g. 1 c. 1 kt., separate account No. 1.	Umesh Chandra Khasnavis.	1,192 9 4	..	322 2 8
				2 as. 13 g. 1 c. 1 kt., separate account No. 2.	Gopendra Narayan Roy.	1,192 9 4	..	322 2 8
				5 as. 6 g. 2 c. 2 kt., separate account No. 3.	Surendra Narain Chaudhury.	2,385 2 8	..	644 5 4
				1a. 6 g. 2 c. 2 kt., separate account No. 5.	Umesh Chandra Khasnavis.	596 4 8	..	160 15 8
				1 a. 6 g. 2 c. 2 kt., separate account No. 6.	Gopendra Narain Rai	596 4 8	..	161 0 0
				13 as. 6 g. 2 c. 2 kt. All other shares, 2 as. 13 g. 1 c. 1kt., will be excluded from sale.				
184	Mahal and pargana Rajnagar.	5,191 10 11	Yes ..	..	Maharaj Bahadur Singh.	..	1,492 15 11	..
462	Mahal Safanagar, pargana Kardaha.	7,637 8 6	Yes ..	..	Sayed Badrudja and others.	..	2,072 15 6	..
463	Mahal Amrah, pargana Gilahabari.	5,016 2 5	Yes ..	..	Brojo Bhusan Roy Chaudhury and others.	..	1,356 15 6	..

This notice is issued in respect of instalment of revenue due on or before the 30th Agrahayan, 1341 B.S., of which the latest date of payment was 12th January 1935 A.D.

Dinajpur, the 23rd February 1935. [ILLEGIBLE], *for* Collector.

Notification A.

NOTICE is hereby given, under sections 6 and 13, Act XI of 1859, that the undermentioned estates and shares of estates in the district of Bakarganj will be put up for sale at the office of the Collector of that district on the 25th March 1935, at 12 noon, for arrears of revenue and other demands which by law are realizable as arrears of land revenue.

When in columns 5, 7 and 9 of the following statement it is stated that only a share is to be sold, it is to be understood that a separate account is kept for that share :—

Tauzi No.	Name of mahal and pargana.	Sadar jama of whole estate.	Whether the whole estate is to be sold.	If only a share is to be sold, specification of such share or shares.	Names of proprietors of property to be sold.	If only a share is to be sold, the sadar jama of such share.	If the whole estate is to be sold, the arrears due from it.	If only a share is to be sold, the arrears due from it.
1	2	3	4	5	6	7	8	9
		Rs. a. p.				Rs. a. p.	Rs. a. p.	Rs. a. p.
1	Zemindari Azimpur, tappa Azimpur.	2,430 1 4	..	5 as. 9 g. 3 c. 1 kt. 10 til 10 chhatak share covered by separate account No. 1 will be sold. All other shares than that specified will be excluded from sale.	Dilip Kumar Ray Chaudhury and others.	834 6 3	..	116 6 6
813	Taluk Mahammad Idrak, pargana Bangorora.	2,631 14 0	Whole	....	Golam Mostafa Choudhury and others.	..	1,431 7 11	..
1408	Taluk Abu Mahammad, pargana Bazorgomedpur.	2,065 4 1	Do. ..	....	Radha Charan Das and others.	..	1,266 11 10	..
1433	Taluk Barhan Khan, pargana Bazorgomedpur.	1,735 0 2	Do. ..	8 annas residuary and 8 annas share covered by separate account No. No. 1 will be sold.	Ashutosh Ganguly and another.	..	1,348 13 6	..
1436	Taluk Baidya Nath Singh, pargana Bazorgomedpur.	3,003 0 0	Do. ..	....	Narsindas Chatterjee	..	1,650 5 4	..
1441	Taluk Chandra Shekhar Chakraborty, pargana Bazorgomedpur.	2,651 11 1	..	2 as. 6 g. 2 c. 2 kt. share covered by separate account No. 2 and 3 annas share covered by separate account No. 4 will be sold. All other shares than that specified will be excluded from sale.	Kiran Chandra Chakraborty and others.	883 13 0	..	457 13 4
1448	Mahal Darihat Rajbarigunj, pargana Bazorgomedpur.	708 15 0	Whole	....	Durga Prosanna Ray Chaudhury and others.	..	583 10 0	..
1459	Taluk Fate Chand, pargana Bazorgomedpur.	3,150 8 7	..	7 as. 10 g. residuary and 5 as. 13 g. 1 c. 1 kt. share covered by separate account No. 2 will be sold. All other shares than that specified will be excluded from sale.	Bipin Behari Bose and others.	2,592 10 2	..	2,006 6 9
1462	Taluk Golam Ali, pargana Bazorgomedpur.	1,100 14 0	Whole	....	Abdul Hashem Sikdar.	..	442 0 4	..
1479	Taluk Ganga Gobinda Nag, pargana Bazorgomedpur.	808 9 8	Do. ..	....	Upendra Mohan Pal Chaudhury.	..	125 13 10	..
1482	Taluk Harnath Ghoshal, pargana Bazorgomedpur.	4,035 14 6	Do. ..	....	Bomkesh Chatterjee and others.	..	2,592 7 8	..
1509	Mahal Kalidas Ghatak, pargana Bazorgomedpur.	2,082 15 1	..	5 as. 11 g. 1 c. 1 kt. 10 til residuary and 1 a. 6 g. 2 c. 2 kt. share covered by separate account No. 2 and 1 anna share covered by separate account No. 4 will be sold. All other shares than that specified will be excluded from sale.	Akhoy Kumar Shaha and others.	1,028 12 1	..	342 6 0
1510	Ditto ..	694 5 0	Whole	....	Mathura Mohan Das and others.	..	378 12 4	..
1533	Taluk Krishna-Prosad Guha, pargana Bazorgomedpur.	3,060 15 8	..	4 annas share covered by separate account No. 1 will be sold. All other shares than that specified will be excluded from sale.	Harendra Lal Ray Chaudhury.	990 4 0	..	68 0 0
1555	Taluk Mahammad Jamir, pargana Bazorgomedpur.	559 11 11	Whole	....	Bisseswar Chakraborty and others.	..	265 9 6	..

Tauzi No.	Name of mahal and pargana.	Sadar jama of whole estate.	Whether the whole estate is to be sold.	If only a share is to be sold, specification of such share or shares.	Names of proprietors of property to be sold.	If only a share is to be sold, the sadar jama of such share.	If the whole estate is to be sold, the arrears due from it.	If only a share is to be sold, the arrears due from it.
1	2	3	4	5	6	7	8	9
		Rs. a. p.				Rs. a. p.	Rs. a. p.	Rs. a. p.
1567	Taluk Nazimuddin, pargana Bazorgomedpur.	972 13 5	Whole	8 annas residuary and 8 annas share covered by separate account No. 1 will be sold.	Abinash Chandra Banerjee and others.	..	585 3 1	..
1599	Taluk Raj Kishore Rakhit, pargana Bazorgomedpur.	2,138 13 5	Do. ..	11 annas residuary and 5 annas share covered by separate account No. 1 will be sold.	Karuna Kanta Ghose and others.	..	332 12 10	..
1634	Taluk Ram Raja Gan, pargana Bazorgomedpur.	542 11 7	Do. ..	....	Kumar Satya Mohan Ghoshal Bahadur and others.	..	369 1 6	..
1641	Taluk Ram Ratna Das, pargana Bazorgomedpur.	1,831 0 10	..	10as. 6g. 2c. 2kt. residuary share will be sold. All other shares than that specified will be excluded from sale.	Jatindra Kumar Ray Chaudhury and others.	1,182 7 10	..	374 3 10
1653	Taluk Raman Krishna Nag, pargana Bazorgomedpur.	541 14 1	Whole	....	Abinash Chandra Banerjee, trustee.	..	155 10 5	..
1671	Taluk Surja Narain Sen, pargana Bazorgomedpur.	1,158 8 2	Do.	....	Kumar Satya Mohan Ghoshal Bahadur and others.	..	906 2 1	..
1720	Zemindari Chandradvip, pargana Chandradvip.	44,488 2 0	..	4 annas share covered by separate account No. 1 will be sold. All other shares than that specified will be excluded from sale.	The Jessore Loan Co., Ltd.	11,121 1 0	..	9,346 3 8
1723	Zemindari share 1a. 17g. 1c. 2kt., pargana Chandradvip.	9,617 1 0	Whole	....	Nanak Delhi Barmani, guardian for her minor son Monoranjan Prosad Barman.	..	4,793 0 8	..
1729	Taluk Chandra Shekhar Chakrabarty, pargana Chandradvip.	2,531 6 6	Do.	....	Nibaran Chandra Banerji, commor manager.	..	1,735 7 9	..
1740	Taluk Khaje Nur, pargana Chandradvip.	1,544 0 0	Do.	13as. 2g. 1c. residuary and 2as. 17g. 3c. share covered by separate account No. 1 will be sold.	Sadaruddin Ahmed and others.	..	1,244 0 0	..
1748	Taluk Mohammad Hayat, pargana Chandradvip.	7,062 5 8	..	5as. 2g. residuary and 2as. 2g. 1c. 15th share covered by separate account No. 4 will be sold. All other shares than that specified will be excluded from sale.	Ramani Mohan Ray Chaudhury and others.	3,185 2 4	..	2,076 15 4
1752	Taluk Ram Ballav Chakraborty, pargana Chandradvip.	3,298 9 0	Whole	....	Sarat Chandra Ghose, common manager to the estates of Nalini Kanta Chakraborty and others.	..	6,655 3 9	..
1762	Taluk Shib Chandra Das and others, pargana Chandradvip.	6,013 1 10	..	5as. 3g. 1c. 1kt. residuary share will be sold. All other shares than that specified will be excluded from sale.	Surendra Kumar Ray Chaudhury and others.	1,941 11 10	..	343 6 0
1929	Zemindari share 2 annas, pargana Idrakpur.	591 10 6	Whole	....	Purna Chandra Chakraborty and others.	..	56 12 9	..
1930	Zemindari share 2 annas, pargana Idrakpur.	536 8 8	Do.	....	Ditto ..	..	67 14 9	..
1932	Zemindari share 3 annas, pargana Idrakpur.	986 6 6	Do.	....	Ditto ..	..	127 13 2	..
2702	Zemindari share 2as. 15g., pargana Uttar Shahabazpur.	1,255 1 8	Do.	....	Hari Mohan Ray Chaudhury and others.	..	308 14 6	..
2749	Taluk Durga Gangeswar, pargana Uttar Shahabazpur.	1,037 11 2	..	8 annas share covered by separate account No. 1 and 2as. 13g. 1c. 1kt. share covered by separate account No. 2 will be sold. All other shares than that specified will be excluded from sale.	Probhat Chandra Ray and others.	691 12 10	..	433 13 4
2754	Taluk Durgaram, pargana Uttar Shahabazpur.	881 10 0	Whole	8 annas residuary and 8 annas share covered by separate account No. 1 will be sold.	Brindaban Chandra Nath and others.	..	438 11 4	..

Tauzi No.	Name of mahal and pargana.	Sadar jama of whole estate.	Whether the whole estate is to be sold.	If only a share is to be sold, specification of such share or shares.	Names of proprietors of property to be sold.	If only a share is to be sold, the sadar jama of such share.	If the whole estate is to be sold, the arrears due from it.	If only a share is to be sold, the arrears due from it.
1	2	3	4	5	6	7	8	9
		Rs. a. p.				Rs. a. p.	Rs. a. p.	Rs. a. p.
3029	Taluk Sriram Sen, pargana Uttar Shahabazpur.	784 12 11	Whole	....	Dwaraka Nath Sarkar.	..	294 4 9	..
3256	Zemindari share 2 annas, pargana Ratandi Kalikapur.	3,154 6 9	Do.	13as. 6g. 2c. 2kt. residuary and 2as. 18g. 1c. 1kt. share covered by separate account No. 1 will be sold.	Abdul Kader Chaudhury and others.	..	2,198 13 2	..
3257	Zemindari share 4 annas, pargana Ratandi Kalikapur.	6,308 12 0	..	2as. 15g. share covered by separate account No. 5 will be sold. All other shares than that specified will be excluded from sale.	Hiran Kumar Sen Ray Chaudhury and others.	1,084 5 4	..	336 8 1
3258	Zemindari share 4 annas, pargana Ratandi Kalikapur.	6,308 12 0	..	1a. 16g 2c. 2kt. share covered by separate account No. 5 and 3as. 3g. 3c. share covered by separate account No. 6 will be sold. All other shares than that specified will be excluded from sale.	Tara Prosanna Guha and others.	1,979 10 7	..	1,101 0 5
3266	Zemindari share 3 annas, pargana Shahajadpur.	857 13 4	Whole	....	Kali Kumar Ganguly, common manager.	..	834 12 3	..
3322	Taluk Bahauddin Heshamoddin, pargana Saistanagar.	1,008 0 0	Do. ..	....	Sri Charan Chatterji and others.	..	70 13 6	..
3558	Zemindari, tappa Sultanabad.	23,128 4 3	..	1a. 5g. 1c. 1kt. 19til 2c. 3kag residuary and 13g. 3c. 1kt. 3 til 2c. 2kag share covered by separate account No. 18 will be sold. All other shares than that specified will be excluded from sale.	Mahammad Faizuddin Chaudhury and others.	2,807 7 10	..	580 5 10
3834	Zemindari share 6¼ gandas, pargana Selimabad.	1,830 12 0	..	10 annas residuary share will be sold. All other shares than that specified will be excluded from sale.	Rajendra Nath Chakraborty and others.	1,144 4 0	..	330 7 7
3836	Zemindari share 7 gandas, pargana Selimabad.	2,004 11 0	..	10as. 13g. 1c. 1kt. residuary share will be sold. All other shares than that specified will be excluded from sale.	Mahendra Nath Mitra and others.	1,376 7 0	..	268 6 0
3841	Zemindari share 2as 17½g., pargana Selimabad.	17,070 2 6	..	5as. 6g. 2c. 2kt. residuary share will be sold. All other shares than that specified will be excluded from sale.	Kumar Satya Mohan Ghoshal Bahadur and others.	5,992 0 11	..	2,853 2 11
3843	Zemindari share 18 gandas, pargana Selimabad.	8,593 6 8	..	8 annas share covered by separate account No. 1 will be sold. All other shares than that specified will be excluded from sale.	Haran Chandra Sen, receiver.	1,796 11 4	..	1,187 4 5
3849	Zemindari share 9¼ gandas, pargana Selimabad.	2,924 3 11	Whole	....	Kaseswari Chaudhurani.	..	3,201 4 0	..
3865	Zemindari share 10as. 18¼g., tappa Abdullapur.	2,360 10 0	..	7as. 9g. 2c. 1kt. 12til residuary share will be sold. All other shares than that specified will be excluded from sale.	Nibaran Chandra Banik and others.	1,100 7 11	..	247 5 7
4534	Char Sharikel, pargana Jaxira.	3,441 11 3	Whole	....	A. M. Paruk and others.	..	1,274 11 3	..
4539	Rangaball Abad, pargana Chandradvip.	19,008 0 0	Do. ..	....	Bimala Charan Guha, receiver.	..	1,500 0 0	..
4575	Char Barai Karan, pargana Selimabad.	541 0 0	Do. ..	....	Kumar Satya Mohan Ghoshal Bahadur and others.	..	480 2 0	..
4605	Char Samasdi Baligao, pargana Saistanagar.	2,197 0 0	Do. ..	....	Satish Chandra Das and others.	..	742 0 2	..
4622	Char Kusangal, pargana Azimpur.	647 6 6	Do. ..	....	Syama Charan Sarkar.	..	300 0 0	..

Tauzi No.	Name of mahal and pargana.	Sadar jama of whole estate.	Whether the whole estate is to be sold.	If only a share is to be sold, specification of such share or shares.	Names of proprietors of property to be sold.	If only a share is to be sold, the sadar jama of such share.	If the whole estate is to be sold, the arrears due from it.	If only a share is to be sold, the arrears due from it.
1	2	3	4	5	6	7	8	9
		Rs. a. p.				Rs. a. p.	Rs. a. p.	Rs. a. p.
4025	Dari Char Gazipur, pargana Selimabad.	2,357 0 0	Whole ..	....	Kumar Satya Mohan Ghoshal Bahadur and others.	..	2,221 8 11	..
4029	Char Tengra Khali, pargana Selimabad.	685 0 0	Do. ..	....	Rajani Nath Ukil ..	..	575 0 0	..
4646	Purba Char Titla, pargana Ratandi Kalikapur.	10,122 0 0	Do. ..	....	Bhupendra Nath Sen Ray Chaudhury and others.	..	20,999 0 0	..
4651	Char Madhabroy 1st Takta, pargana Azimpur.	871 0 0	Do. ..	....	Tarak Chandra Datta Chaudhury and others.	..	171 7 0	..
4688	Char Jahapur, pargana Jahapur.	4,999 9 0	Do. ..	....	Alfatannessa Khatun and others.	..	3,078 12 0	..
4734	Char Shachilapur Kistakati, pargana Selimabad.	996 0 0	Do. ..	....	Kamar Satya Mohan Ghoshal Bahadur and others.	..	906 0 0	..
4751	Char Lakhami Bardhan, pargana Chandradvip.	627 0 0	Do. ..	....	Profulla Kumar Ray Chaudhury and others.	..	250 0 0	..
4757	Char Madanpura, pargana Ratandi Kalikapur.	2,020 0 0	Do ..	....	Abinash Chandra Guha Chaudhury others.	..	34 6 1	.
4793	Char Nepattashil, pargana Jazira.	640 6 0	Do. ..	....	Bomkesh Chatterjee and others.	..	395 4 0	.
4873	Taluk Ram Jagannath Ray and others, pargana Bazorgomedpur.	2,842 8 2	Do. ..	12 annas residuary, 2 annas share covered by separate account No. 1 and 2 annas share covered by separate account No. 2 will be sold.	Radha Charan Bose and others.	..	378 11 2	.
5202	Char Udaypur, pargana Jazira.	1,410 0 0	..	8 annas residuary share will be sold. All other shares than that specified will be excluded from sale.	Tara Prosanna Guha	708 0 0	..	602 0 0
5209	Taluk Ramdeb Datta, mauza Shibpur, pargana Gopalpur Mirjanagar.	1,751 0 0	Whole	....	Ditto ..	..	1,236 0 0	..
5210	Taluk Ramdeb Datta, mauza Mahadebpur, pargana Gopalpur Mirjanagar.	760 0 0	Do. ..	....	Ditto ..	..	464 0 0	..
5220	Hazipur *alias* Majlipur, tappa Abdullapur.	806 0 0	..	9 as. 12 g. 2 c. 1 kt. 1 dt. residuary and 17 g. 3 c. 1 dt. share covered by separate account No. 3 will be sold. All other shares than that specified will be excluded from sale.	Gyasuddin Ahmed Chaudhury and others.	520 13 4	..	478 2 0
6054	Char Kachapia, pargana Ratandi Kalikapur.	1,680 0 0	Whole	....	Abdul Kader Chaudhury and others.	..	815 3 6	..
6080	Taluk Howla Anantaram Nag, pargana Bazorgomedpur.	729 15 9	Do. ..	....	Abinash Chandra Banerjee, trustee.	..	422 13 6	..
6102	Taluk Madhabram Datta, kismat Ramnagar, pargana Bazorgomedpur.	761 14 3	Do. ..	....	Rajendra Nath Das and others.	..	300 0 0	..
6117	Osat Taluk Kebal Raj Pran, pargana Bazorgomedpur.	1,115 6 0	....	8 as. 15 g. residuary share will be sold. All other shares than that specified will be excluded from sale.	Sanad Kumar Banerjee and others.	609 14 8	..	32 0 7
6345	Surplus accretion to Jahapur, pargana Jazira.	1,567 0 0	Whole	....	Syed Bahauddin Ahmed and others.	..	594 0 0	..
6358	Surplus accretion to Azimpur and Andharmanik, pargana Azimpur.	521 0 0	Do. ..	....	Kaliprosanna Datta Chaudhury and others.	..	234 4 4	..
6410	Surplus accretion to Shakuchia, pargana Abdullapur.	1,042 0 0	Do. ..	....	Shajeda Khatun Chaudhurani and others.	..	200 0 0	..

Tauzi No.	Name of mahal and pargana.	Sadar jama of whole estate.	Whether the whole estate is to be sold.	If only a share is to be sold, specification of such share or shares.	Names of proprietors of property to be sold.	If only a share is to be sold, the sadar jama of such share.	If the whole estate is to be sold, the arrears due from it.	If only a share is to be sold, the arrears due from it.
1	2	3	4	5	6	7	8	9
		Rs. a. p.				Rs. a. p.	Rs. a. p.	Rs. a. p.
6460	Zemindari Gaurinath Ray, share 1 anna, pargana Aurangpur.	897 6 5	Whole	....	Durga Ratan Ray Chaudhury and others.	..	422 10 4	..
6571	Surplus accretion to Bagura-Alekanda, pargana Chandradvip.	857 0 0	Do. ..	....	Ramani Mohan Ray Chaudhury and others.	..	326 9 8	..
6672	Surplus accretion to mauza Baniari, pargana Selimabad.	1,156 0 0	Do. ..	....	Saroj Kumar Bose, common manager.	..	633 0 0	..
6674	Surplus accretion to Raghunathpur, pargana Selimabad.	1,688 0 0	Do. ..	....	Ditto ..	..	933 0 0	..
6751	Taluk Nara Narain Ghose, pargana Balarampur-Sujabad.	1,529 0 3	Do. ..	4 annas residuary and 12 annas share covered by separate account No. 1 will be sold.	Shananda Chandra Shaha Chaudhury.	..	1,286 13 0	..
7063	Taluk Mahammad Yusuf, pargana Bazorgomedpur.	563 12 0	Do. ..	....	Mahammad Yusuf..	..	220 13 0	..
7176	Taluk Rajendra Nath Chakraborty, pargana Chandradvip.	1,687 9 8	..	8 annas residuary share will be sold. All other shares than that specified will be excluded from sale.	Kiran Chandra Charakborty and others.	843 12 8	..	470 10 6
7177	Taluk Jogendra Nath Chakraborty, pargana Chandradvip.	843 12 10	Whole	....	Jogendra Nath Chakraborty.	..	570 10 3	..
7178	Taluk Sukumari Debi Chaudhurani, pargana Chandradvip.	843 12 10	Do. ..	....	Sukumari Devi Chaudhurani.	..	313 12 2	..
7212	Taluk Satish Chandra Bose, pargana Bazorgomedpur.	1,133 7 3	Do. ..	....	Satish Chandra Bose, executor.	..	158 9 4	..
7213	Taluk Probha Moyee Guha, pargana Bazorgomedpur.	509 12 9	Do. ..	....	Probha Moyee Guha	..	33 4 2	..
7214	Taluk Monoranjan Ghose, pargana Bazorgomedpur.	509 12 9	Do. ..	....	Monoranjan Ghose Chaudhury and others.	..	122 5 11	..

The above estates are being advertised for sale for the instalments of revenue which were due on or before the 30th Agrahayan, 1341 B.S., of which the latest date of payment was 12th January 1935.

Barisal, the 26th February 1935. MD. MAHMUD, Addl. Collector.

Notification A.

NOTICE is hereby given, under sections 6 and 13, Act XI of 1859, that the undermentioned estates and shares of estates in the district of Dinajpur will be put up for sale at the office of the Collector of that district on the 26th March 1935, at 12 noon, for arrears of revenue and other demands which by law are realisable as arrears of land revenue.

When in columns, 5, 7 and 9 of the followibg statement it is stated that only a share is to be sold, it is to be understood that a separate account is kept for that share :—

Tauzi No.	Name of mahal and pargana.	Sadar jama of whole estate.	Whether the whole estate is to be sold.	If only a share is to be sold, specification of such share or shares.	Names of proprietors of property to be sold.	If only a share is to be sold, the sadar jama of such shares.	If the whole estate is to be sold, the arrears due from it.	If only a share is to be sold, the arrears due from it.
1	2	3	4	5	6	7	8	9
		Rs. a. p.				Rs. a. p.	Rs. a. p.	Rs. a. p.
47	Mahal Loka, pargana Khalsi.	4,466 3 0	No ..	1 a. 8 g. 1 c. 2 kt. 1 dt., separate account No. 4.	Shibani Debi, guardian for minor sons Karuna Kanta Rai and another.	391 10 7	..	97 2 6
				1 a. 9 g. 2 c. 1 kt. 1 dt. 2 job, separate account No. 12.	Indumati Debi and others.	407 15 8	..	101 0 0
				2 as. 18 g. 2 dt. 2 job. All other shares 13 as. 1 g. 3 c. 2 kt. 1 job, will be excluded from sale.				
49	Mahal Saidpur, pargana Gilahabari.	2,176 10 1	Yes ..	....	Bibi Isamon Nesa Chaudhurani.	..	590 0 0	..
50	Mahal Kamarpara, pargana Sarhatta.	2,147 11 8	No ..	1 a. 15 g. 2 c. 2 dt., separate account No. 2.	Shibani Debi, guardian of minor sons Karuna Kanta Rai and another.	238 11 0	..	76 15 0
				2 as. 1 g. 1 c. 2 kt. 2 dt. 1 job, separate account No. 7.	Indumati Debi and others.	278 6 7	..	90 0 0
				3 as. 17 g. 1 dt. 1 job. All other shares, 12 as. 2 g. 3 c. 2 kt. 1 dt. 2 job, will be excluded from sale.				
51	Mahal Bishnupur, pargana Gilahabari.	2,159 7 9	No ..	2 as. 13 g. 1 c. 1 kt., separate account No. 4.	Ditto ..	359 14 7	..	97 0 0
				2 as. 13 g. 1 c. 1 kt., separate account No. 5.	Bhobatosh Bandopadhyaya and another.	359 14 7	..	99 0 0
				5 as. 6 g. 2 c. 2 kt. All other shares, 10 as. 13 g. 1 c. 1 kt., will be excluded from sale.				
52	Mahal Durgapur, pargana Kardaha.	6,472 5 7	No ..	2 as. 13 g. 1 c. 1 kt., separate account No. 5. All other shares, 13 as. 6 g. 2 c. 2 kt., will be excluded from sale.	Indumati Debi and others.	1,078 11 7	..	202 0 0
58	Mahal Faijullapur, pargana Rajnagar.	974 14 10	No ..	5 as. 5g. residuary share	Khalliuddin Ahmed Chaudhury and others.	319 14 5	..	87 0 0
				8 as. 2 c. 2½ dt., separate account No. 1.	Mahidur Rahaman Chaudhuri.	480 3 2	..	131 15 11
				13 as. 5 g. 2 c. 2½ dt. All other shares, 2 as. 14 g. 1 c. 6½ dt. will be excluded from sale.				
69	Mahal Narayanpur, pargana Saibari.	5,578 6 6	No ..	6 as. 10 g. residuary share. All other shares, 9 as. 10 g. , will be excluded from sale.	Girija Ballav Rai Chaudhuri.	2,206 2 6	..	612 10 0
96	Mahal Gobindapur, pargana Santosh.	3,698 10 8	Shares mentioned in column 5 will be put up to sale together.	8 annas residuary share	Khatema Saifuddin Chaudhury, matwali proprietor.	1,849 5 4	..	482 15 10
				8 annas, separate account No. 1.	Mahammed Esartulla Chaudhury, guardian of minor matwali proprietor Sadekuddin Ahmed Chaudhuri.	1,849 5 4	..	519 15 10

Tauzi No.	Name of mahal and pargana.	Sadar Jama of whole estate.	Whether the whole estate is to be sold.	If only a share is to be sold, specification of such share or shares.	Names of proprietors of property to be sold.	If only a share is to be sold, the sadar jama of such shares.	If the whole estate is to be sold, the arrears due from it.	If only a share is to be sold, the arrears due from it.
1	2	3	4	5	6	7	8	9
		Rs. a. p.				Rs. a. p.	Rs. a. p.	Rs. a. p
133	Mahal Palashi, pargana Gilahabari.	1,696 12 7	No ..	8 annas residuary share	Mukunda Chandra Datta Chaudhuri and others.	848 6 3	..	138 0 0
				2 annas, separate account No. 2.	Munshi Amir Hossain Talukdar and others.	212 1 7	..	33 15 10
				10 annas.				
				All other shares, 6 annas, will be excluded from sale.				
137	Mahal Bahala, pargana Bijanagar.	4,832 0 0	No ..	2 as. 13 g. 1 c. 1 kt., separate account No. 5.	Indumati Debi and others.	805 11 6	..	217 0 0
				All other shares, 13 as. 6 g. 2 c. 2 kt., will be excluded from sale.				
143	Mahal Panchanon, pargana Deblkote.	1,947 10 0	Yes ..	....	Panchanon Nandi Chaudhuri.	..	535 0 0	..
145	Mahal Binnakuri, pargana Deora.	4,761 0 10	No ..	12 annas residuary share	Kumar Krishna Nandi Chaudhury and others.	3,570 12 8	..	896 11 8
				All other shares, 4 annas, will be excluded from sale.				
162	Mahal Gakul, pargana Gilahabari.	2,893 2 6	No ..	6 as. 6 g. 2 c. 2 kt. residuary share.	Biman Chandra Datta Munshi and another.	1,145 3 3	..	201 10 1
				All other shares, 9 as. 18 g. 1 c. 1 kt., will be excluded from sale.				
170	Mahal Mahattore, pargana Bajitpur.	1,879 12 0	No ..	6 as. 6 g. 2 c. residuary share.	Surendra Narayan Chaudhury.	743 1 5	..	200 15 11
				All other shares, 9 as. 18 g. 2 c., will be excluded from sale.				
172	Mahal Bhandardaha, pargana Dehatta.	2,392 5 5	Yes ..	....	Kshirode Kanta Sen, Pleader Receiver on behalf of matwalli Md. Yusuf Chaudhury.	..	479 0 0	
181	Mahal Galahar, pargana Deora.	1,612 13 0	No	5 as. 4 p., separate account No. 2.	Chandra Sekhar Das Deb Barma and another.	537 9 8	..	158 0 0
				All other shares, 10 as. 8 p., will be excluded from sale.				
189	Mahal Panchsala, pargana Bihinagar.	4,519 11 0	No	8 annas residuary share	Brojo Dulal Dhar and others.	2,259 13 6	..	586 15 10
				All other shares, 8 annas, will be excluded from sale.				
197	Mahal Malancha, pargana Gilahabari.	3,349 7 3	Yes	....	Mohini Mohan Bandopadhyaya and others.	..	370 9 0	..
198	Mahal Inatpur, pargana Gilahabari.	1,745 3 6	No	3 annas residuary share	Mahammed Raisuddin Chaudhury and others.	327 3 8	..	79 1 9
				5 as. 6 g. 2 c. 2 kt., separate account No. 2.	Daimuddin Chaudhury and others.	581 11 10	..	157 0 0
				7 as. 6 g. 2 c. 2 kt., separate account No. 3.	Barada Kanta Gangopadhyaya and another.	799 14 3	..	217 0 0
				15 as. 13 g. 1 c. 1 kt.				
				All other shares, 6 g. 2 c. 2 kt., will be excluded from sale.				
200	Mahal Kulahari, pargana Sasbir.	4,590 0 8	No	4 as. 5 g. 1 c. 1 kt., separate account No. 2.	Bishnupada Chaudhury and another.	1,224 2 7	..	331 15 0
				All other shares, 11 as. 14 g. 2 c. 2 kt., will be excluded from sale.				
216	Mahal Gobindapur, pargana Panjra.	4,083 12 3	No	8 annas, separate account No. 1.	Khirode Behari Saha and others.	2,041 14 2	..	533 0 0
				All other shares, 8 annas, will be excluded from sale.				
227	Mahal Jotebari, pargana Sultanpur.	7,189 11 4	No	8 annas residuary share	Chandra Nath Chatterjee.	3,594 13 8	..	473 15 8
				All other shares, 8 annas, will be excluded from sale.				
234	Mahal Farakkabad, pargana Bijanagar.	2,616 10 0	Yes	....	Shoradindu Nath Palit and others.	..	774 0 0	..
237	Mahal Daulatpur, pargana Rajnagar.	4 666 8 1	Yes	....	Niyamatulla Chaudhury, matwalli.	..	1,333 0 0	* ..

Tauzi No.	Name of mahal and pargana.	Sadar jama of whole estate.	Whether the whole estate is to be sold.	If only a share is to be sold, specification of such share or shares.	Names of proprietors of property to be sold.	If only a share is to be sold, the sadar jama of such shares.	If the whole estate is to be sold, the arrears due from it.	If only a share is to be sold, the arrears due from it.
1	2	3	4	5	6	7	8	9
		Rs. a. p				Rs. a. p.	Rs. a. p.	Rs. a. p.
249	Mahal Haribangshapur, pargana Deora.	1,015 11 5	Yes	....	Jadav Lal Jhan Chakravarty.	.	436 11 4	..
257	Mahal Moaleyuddin, pargana Gilahabari.	921 7 5	Yes	....	Moaleyuddin Chaudhury.	..	258 0 0	..
266	Mahal Hajipur, pargana Lalbari Khalisa.	1,559 13 5	No	12 as. 7 g. 2 c. residuary share. All other shares, 3 as. 12 g. 2 c., will be excluded from sale.	Kali Kinkar Nag and others.	1,206 7 0	..	311 2 6
271	Mahal Raysali, pargana Kharali.	4,649 11 8	No ..	6 annas, separate account No. 1. 2as. 10g., separate account No. 3. 8as. 10g. All other shares, 7as. 10g., will be excluded from sale.	Chandra Nath Chatterjee and another. Bibhuti Bhushan Bhattacherjee and others.	1,743 10 5 726 8 4	.. ..	473 0 0 196 10 11
278	Mahal Debnathpur, pargana Deora.	3,275 10 0	No ..	7as. 13g. 2c. residuary share. 1a. 3g. 2kt. 3job, separate account No. 2. 8as. 16g. 2c. 2kt. 1dt. All other shares, 7as. 3g. 1c. 2dt., will be excluded from sale.	Prafulla Mayee Debi and others. Protap Chandra Khasnavis.	1,570 7 1 237 6 9	.. ..	400 0 0 61 7 9
310	Mahal Chakmohesh, pargana Santosh.	1,448 10 2	Shares mentioned in column 5 will be put up to sale together.	8 annas residuary share 8 annas, separate account No. 1.	Saifuddin Chaudhury Motwalli Mahammed Esartulla Chaudhury guardian for minor proprietor and motwalli Sadekuddin Ahmed Chaudhury.	724 5 1 724 5 1	.. ..	199 15 10 198 15 1
316	Mahal Rajibpur, pargana Panjra.	884 11 8	Yes ..	....	Kiron Bala Sinha and another, guardians on behalf of Amrita Gopal Sinha and another.	..	167 15 8	..
320	Mahal Mollapara, pargana Bihinagar.	4,212 12 0	Yes ..	....	Emajuddin Ahmed Chaudhury and others.	..	916 0 1	..
*336	Mahal Gunahi, pargana Sultanpur	7,746 10 8	No ..	5as. 6g. 2c. 2kt residuary share. All other shares, 10as. 13g. 1c. 1kt., will be excluded from sale.	Narain Kumar Chaudhury, proprietor and guardian of minor Srish Kumar Chaudhury.	2,582 3 6	..	690 1 5
345	Mahal Raghabendrapur, pargana Fulbari.	3,079 15 0	No ..	12 annas residuary share All other shares, 4as., will be excluded from sale.	Monindra Chandra Bakshi and others.	2,310 0 7	..	627 8 10
350	Mahal Baabhanga, pargana Saibari.	1,410 1 0	Yes ..	....	Dinabandhu Das and others.	..	441 0 0	..
358	Mahal Ranipur, pargana Rajnagar.	581 4 0	Yes ..	....	Joynul Haq Chaudhury and another	..	00 0 0	..
377	Mahal Punatti, pargana Nurpur.	908 15 9	Shares mentioned in column 5 will be put up to sale together.	8 annas residuary share 8 annas, separate account No. 1.	Ashutosh Guha and others. Harish Chandra Das Deb Barman, sebait of idols Durga Thakurani, etc.	454 7 10 454 7 11	.. ..	122 15 10 123 0 0
382	Mahal Dilkarpur, pargana Gilahabari.	1,072 11 8	No ..	8 annas residuary share All other shares, 8 annas, will be excluded from sale.	Purnendu Kumar Banerjee and others.	536 5 10	..	145 15 10

Tauzi No.	Name of mahal and pargana.	Sadar jama of whole estate.	Whether the whole estate is to be sold.	If only a share is to be sold, specification of such share or shares.	Names of proprietors of property to be sold.	If only a share is to be sold, the sadar jama of such shares.	If the whole estate is to be sold, the arrears due from it.	If only a share is to be sold, the arrears due from it.
1	2	3	4	5	6	7	8	9
		Rs. a. p.				Rs. a. p.	Rs. a. p.	Rs. a. p.
399	Mahal Subarnakhuli, pargana Panjra.	2,614 0 6	No ..	4 annas share of Subarnakhuli group of mauza, separate account No. 1.	Chhakumani Dasya	205 11 4	..	55 11 8
				8 annas share of Subarnakhuli group of mauza, separate account No. 2.	Haris Chandra Das Deb Barma.	411 6 10	..	111 7 6
				4 annas share of Subarnakhuli group of mauza, separate account No. 4.	Chin Moyee Chaudhurani and another.	205 11 5	..	55 11 9
				16 annas. All other shares, 16 annas share of Hosainpur group of mauza and 8 annas 16 gds. 1 $\frac{247}{329}$ dt., i.e., 16 annas share of Bishnuganj-Khamar group of mauzas will be excluded from sale.				
404	Mahal Haragobindapur, pargana Gilahabari.	3,349 7 4	No ..	6 as. 10 gds. 1 kt. 2½ dt. residuary share. All other shares, 9 as. 9 gds. 3 c. 1 kt. ½ dt., will be excluded from sale.	Nasaruddin Chaudhury and others.	1,362 3 11	..	172 7 8
451	Mahal Bhabki, pargana Panjra.	1,524 0 6	No ..	8 annas residuary share All other shares, 8 annas, will be excluded from sale.	Jotindra Narayan Ghose and others.	762 0 3	..	100 0 0
468	Mahal Chandipur, pargana Gilahabari.	1,745 3 6	Yes ..	....	Dhruba Nath Pal and others.	..	471 15 8	..
469	Mahal Shyampur, pargana Gilahabari.	1,745 3 6	No ..	5 annas residuary share	Mahammed Raisuddin Chaudhury and others.	545 6 1	..	88 12 7
				5 as. 6 gds. 2 c. 2 kt., separate account No. 2.	Daimuddin Chaudhury and others.	581 11 10	..	157 0 0
				5 as. 6 gds. 2 c. 2 kt., separate account No. 3.	Barada Kanta Gangopadhyaya and another.	581 11 10	..	156 15 10
				15 as. 13 gds. 1 c. 1 kt. All other shares, 6 gds. 2 c. 2 kt., will be excluded from sale.				
484	Mahal Jalali, pargana Salbari.	806 9 3	Shares mentioned in column 5 will be put up to sale together.	16 annas share of Boalia Araji group of mauzas residuary share.	Brojendra Lal Jhan Chakravorty and others.	275 8 5	..	53 3 10
				16 annas share of Kakdubi group of mauzas, sepatare account No. 1.	Kisori Lal Jhan Chakraverty and others.	531 0 10	..	140 2 11
497	Mahal Amjam Khore, pargana Dohatta.	1,075 7 0	Yes ..	....	Promotho Nath Majumder and others.	..	258 15 0	..
506	Mahal Sultanpur, pargana Lalbari Khalisa.	991 2 5	No ..	12as. 7g. 2c. residuary share. All other shares, 3as. 12g. 2c., will be excluded from sale.	Kalikinkar Nag and others.	766 9 5	..	182 9 5
507	Mahal Dalaikota, pargana Lalbari Khalisa.	536 3 1	Yes ..	....	Akhoy Lal Saha and others.	..	150 15 10	..
508	Mahal Chandmukh, pargana Debikote.	673 0 0	Yes ..	....	Sarashi Mohan Ghosh and others.	..	65 7 9	..
785	Mahal Khadimpur, pargana Mohoshow.	1,261 10 10	No ..	4as. 19g. 3c. $\frac{4}{13}$ kt. residuary share.	Alefuddin Hussen Chaudhury and others.	210 4 9	..	57 2 6
				2annas, separate account No. 2.	Jagadish Chandra Rai and others.	157 11 4	..	42 13 11
				3as. 6g. 2c. 2kt., separate account No. 3.	Sarifuddin Hossain Chaudhury and others.	262 13 7	..	71 7 4
				1 anna 10g., separate account No. 4.	Ditto ..	118 4 3	..	32 2 2
				1a. 10g. 2 $\frac{9}{13}$ kt., separate account No. 5.	Alefuddin Hussen and others.	302 4 5	..	82 2 5
				18as. 6g. 2c. 2kt. All other shares, 2as. 13g. 1c. 1kt., will be excluded from sale.				

Tauzi No.	Name of mahal and pargana.	Sadar jama of whole estate.	Whether the whole estate is to be sold.	If only a share is to be sold, specification of such share or shares.	Names of proprietors of property to be sold.	If only a share is to be sold, the sadar jama of such shares.	If the whole estate is to be sold, the arrears due from it.	If only a share is to be sold, the arrears due from it.
1	2	3	4	5	6	7	8	9
		Rs. a. p.				Rs. a. p.	Rs. a. p.	Rs. a. p.
809	Mahal Akhira, pargana Santosh.	604 11 3	Yes ..	....	Kiran Bala Sinha and another, guardians on behalf of Amrita Gopal Sinha and another.	..	154 15 10	..
877	Mahal Gopalpara, pargana Fulhari.	3,184 13 0	No ..	6as. 6g. 2c. 2kt. residuary share. All other shares, 9as. 13g. 1c. 1kt, will be excluded from sale.	Biman Chandra Datta Munshi.	1,260 12 2	..	287 14 4
889	Mahal Hashimpur, pargana Panjra.	852 13 2	No ..	8as. 2g. 3c. 1dt. residuary share.	Zahural Hoque Chaudhury and another.	433 13 1	..	26 5 3
				3as. 6g. 2c. 2kt., separate account No. 1.	Talsin Ali Chaudhury and others.	177 10 9	..	34 0 0
				2as. 5g. 1c. 1dt., separate account No. 4.	Abdur Rasid Chaudhury and others.	120 10 8	..	22 0 0
				13as. 14g. 2c. 2kt. 2dt. All other shares, 2as. 5g. 1c. 1dt., will be excluded from sale.				
893	Mahal Hazratpur, pargana Kardaha.	2,356 10 8	No ..	8 annas, separate account No. 1. All other shares, 8 annas, will be excluded from sale.	Padmini Mohan Datta Gupta and others.	1,178 5 4	..	318 0 0
900	Mahal Naosara, pargana Mahoshow.	573 8 7	Share mentioned in column 5 will be put up to sale together.	12 annas residuary share.	Romesh Chandra Jhan Chakravarty and others.	430 2 5	..	85 15 5
				4 annas, separate account No. 1.	Promila Sundari Debi and another.	143 0 2	..	29 0 0
910	Mahal Madhabpara, pargana Rajnagar.	1,817 0 11	Yes ..	....	Hazi Munshi Mahtabuddin Chaudhury and others.	..	105 6 6	..
917	Mahal Durgapur, pargana Deora.	2,250 11 1	Yes ..	....	Jadavlal Chakravorty and others.	..	605 3 10	..
923	Mahal Kawarpur, pargana Nurpur.	1,323 11 10	No ..	10 as. 13 g. 1 c. 1 kt. residuary share. All other shares, 5 as. 6 g. c. 2 kt., will be excluded from sale.	Hemanta Bala Debi, guardian for minors Kamalacharan Sen and others.	882 7 11	..	267 15 11
933	Mahal Balupara, pargana Kardaha.	1,211 0 5	Yes ..	....	Murari Mohan Chaudhury and others.	..	329 8 2	..

This notice is issued in respect of instalment of revenue due on or before the 30th Agrahyan, 1341 B.S., of which the latest date of payment was 12th January 1935 A. D.

[ILLEGIBLE], *for* Collector.

Dinajpur, the 23rd February 1935.

Notification.

NOTICE is hereby given, under sections 6 and 13, Act XI of 1859, read with Act VII (B.C.) of 1868, that the undermentioned estates and shares of estates and khas mahal tenures in the district of Noakhali will be put up for sale at the office of the Collector of that district on the 22nd March 1935, at 12 noon, for arrears of revenue (and other demands which by law are realisable as arrears of land revenue).

When in columns 5, 7 and 9 of the following statement it is stated that only a share is to be sold, it is to be understood that a separate account is kept for that share :—

Tauzi No.	Name of mahal and pargana.	Sadar jama of whole estate.	Whether the whole estate is to be sold.	If only a share is to be sold, specification of such share or shares.	Names of proprietors of property to be sold.	If only a share is to be sold, the sadar jama of such share.	If the whole estate is to be sold, the arrears due from it.	In only a share is to be sold, the arrears due from it.
1	2	3	4	5	6	7	8	9
		Rs. a. p.		**Estates.**		Rs. a. p.	Rs. a. p.	Rs. a. p.
Lot No. 1, tauzi No. 7.	Babupur, hishya 3 as. 10 gds., pargana Babupur.	3,211 0 6 ..	Whole	..	Rai Raj Kumar Dutta Bahadur.	..	L. R.— 931 2 10 Cess— 1,619 3 6	..
Lot No. 2, tauzi No. 18.	Char Afzal Fakira and Char Lakshmi, pargana Sandip.	2,847 12 8	Share ..	*Separate account No. 1, hishya 7 as. 17 gds. 3 cr. 2 kg. 8 dhul.	Uma Charan Shaha and others.	1,405 2 9	..	L. R.— 3,151 9 11 Cess— 2,373 1 4
Ditto	Ditto ..	2,847 12 8	Do. ..	*Separate account No. 2, hishya 3 as. 1 gd. 2 cr. 2 kg.	Asadulla Bhuya and others.	547 13 11	..	L. R.— 1,195 12 1 Cess— 896 0 9
Lot No. 26, tauzi No. 199.	Char Algi, pargana Sandip.	1,230 0 0	Do. ..	*Separate account No. 2, hishya 6 as. 15 gds.	Munshi Afazuddin Ahmed and others.	518 14 6	..	L. R.— 305 7 0 Cess— 54 14 0
Lot No. 27, tauzi No. 203.	Dandrah, hishya 1 a. 18 gds. 2 cr. 1 kt., pargana Dandrah.	3,298 11 3	Do. ..	*Residuary share, hishya 12 as. 10 gds.	Rai Radha Kanta Aich Bahadur and others.	2,577 1 9	..	L. R.— 345 5 1 Cess— 1,332 11 10
Lot No. 28, tauzi No. 208.	Sukchar, pargana Zazira.	2,094 0 0	Do. ..	..	Maulvi Moazzam Hossain Chaudhury and others.	..	L. R.— 687 0 0 Cess— 457 13 9	..
Lot No. 62, tauzi No. 1574.	Thak Hudrakhali, pargana Sandip.	3,250 0 0	Do. ..	..	Seikh Md. Bazle Sobhan Chaudhury and others.	..	L. R.— 1,820 0 0 Cess— 132 12 0	..
Lot No. 63, tauzi No. 1577.	Thak Char Sekandar, pargana Zazira.	954 7 0	Do. ..	..	Babu Madhab Chandra Bhowmik, receiver, and others.	..	L. R.— 1,029 15 0 Cess— 62 13 6	..
Lot No. 66, tauzi No. 1956.	Diara Thak Char Amanullah, pargana Zazira.	3,881 0 0	Do. ..	..	Aminulla and others	..	L. R.— 3,794 4 3	..
Lot No. 70, tauzi No. 1963.	Thak Hudrakhali, pargana Sandip.	2,174 0 0	Do. ..	..	Keramat Ali and others.	..	L. R.— 883 0 0 Cess— 37 8 5	..
Lot No. 73, tauzi No. 1967.	Diara Mahal Hudrakhali, pargana Sandip.	586 0 0	Do. ..	..	Mr. Paul Delauney and others.	..	L. R.— 375 0 0 Cess— 36 6 0	..
				Khas Mahal Tenures.				
Lot No. 113, tauzi No. 1560.	Char Khondakar, police-station Shonagazi, tenure No. 286.	2,449 3 0	Whole	..	Ananda Kumar Sen and others.	..	Rent— 1,530 12 0 Cess— 124 13 0	..
Lot No. 143, tauzi No. 1587.	Chakla Banchhanagar, police-station Lakshmipur, tenure No. 81.	919 14 0	Do. ..	..	Nrisingha Gopal Singha Chaudhury and others.	..	Rent— 294 11 0 Cess— 69 3 6	..
Lot No. 199, tauzi No. 1627.	Char Meher, police-station Ramgati, abad No. 2.	880 7 0	Do. ..	..	Jadab Chandra Bhattacharyya and another.	..	Rent— 853 11 0 Cess— 100 13 10	..
Lot No. 200, tauzi No. 1627.	Char Meher, police-station Ramgati, abad No. 3.	760 6 0	Do. ..	..	Ditto ..	..	Rent— 747 8 0 Cess— 101 13 0	..
Lot No. 201, tauzi No. 1627.	Char Meher, police-station Ramgati, abad No. 4.	1,814 11 0	Do. ..	..	Ditto ..	..	Rent— 3,432 10 0 Cess— 695 15 9	..
Lot No. 202, tauzi No. 1627.	Char Meher, police-station Ramgati, abad No. 6.	2,887 8 0	Do. ..	..	Ditto ..	..	Rent— 5,383 3 0 Cess— 1,183 3 6	..
Lot No. 213, tauzi No. 1636.	Char Iswar Roy, Part I, police-station Hatiya, howla No. 18.	578 0 0	Do. ..	..	Krishna Mohan Shaha.	..	Rent— 144 12 0 Cess— 9 3 0	..

*Other shares than that specified shall be exempted from sale.

Tauzi No.	Name of mahal and pargana.	Sadar jama of whole estate.	Whether the whole estate is to be sold.	If only a share is to be sold, specification of such share or shares.	Name of proprietors of property to be sold.	If only a share is to be sold, the sadar jama of such share.	If the whole estate is to be sold, the arrears due from it.	In only a share is to be sold, the arrears due from it.
1	2	3	4	5	6	7	8	9
		Rs. a. p.				Rs. a. p.	Rs. a. p.	Rs. a. p.
Lot No. 219, tauzi No. 1636.	Char Iswar Roy, Part I, police-station Hatiya, howla No. 43.	578 0 0	Whole ..	**Khas Mahal Tenures.**	Bharat Chandra Sil and others.	..	Rent— 289 0 0 Cess— 56 0 0	..
Lot No. 275, tauzi No. 1662.	Magdhara, police-station Sandip, tenure No. 943.	516 5 0	Do. ..		Darbesh Ali and others.	..	Rent— 616 6 6 Cess— 41 13 6	..
Lot No. 289, tauzi No. 1662.	Magdhara, police-station Sandip, tenure No. 962/3.	611 15 0	Do. ..	..	Ditto ..	..	Rent— 914 8 0 Cess— 29 13 6	..
Lot No. 301, tauzi No. 1665.	Char Rahim, police-station Sandip, tenure No. 268.	1,249 14 0	Do. ..	.	Jamini Kumar Rakshit and others.	..	Rent— 1,076 5 0 Cess— 176 0 0	..
Lot No. 565, tauzi No. 1672.	Nalchira Chaudhurir Katta, police-station Hatiya, tenure No. 65.	556 0 0	Do. ..	..	Syed Ahmed and others.	..	Rent— 278 0 0 Cess— 25 2 6	..
Lot No. 637, tauzi No. 1686.	Char Alexender, police-station Ramgati, tenure No. 1 (old)/416 (new).	1,508 4 0	Do. ..	..	Serajul Haque ..	..	Rent— 1,971 8 0 Cess— 640 13 0	..
Lot No. 638, tauzi No. 1686.	Char Alexender, police-station Ramgati, tenure No. 2 (old)/417 (new).	968 9 0	Do. ..	..	Raja Mia Chaudhury and others.	..	Rent— 619 12 0 Cess— 54 0 0	..
Lot No. 639, tauzi No. 1686.	Char Alexender, police-station Ramgati, tenure No. 3 (old)/418 (new).	3,000 4 0	Do. ..	..	Krishna Sundar Majumdar.	..	Rent— 1,328 2 0 Cess— 43 0 0	..
Lot No. 649, tauzi No. 1686.	Char Sekandar, police-station Ramgati, tenure No. 2	714 5 0	Do. ..	..	Sachindra Lal Das	..	Rent— 245 3 0 Cess— 8 14 0	..
Lot No. 671, tauzi No. 1942.	Char Falcon, police-station Ramgati, jote No. 4 (old)/180(new).	504 6 0	Do. ..	..	Shamsal Haque and others.	..	Rent— 438 4 0 Cess— 72 13 9	..
Lot No. 679, tauzi No. 1942.	Char Falcon, police-station Ramgati, jote No. 16 (old)/368 (new).	1,081 1 0	Do. ..	..	Nowab Ali ..	..	Rent— 1,405 10 3 Cess— 198 11 3	..
Lot No. 691, tauzi No 1942.	Char Falcon, police-station Ramgati, jote No. 32(old)/208 (new).	611 9 0	Do. ..	..	Fazler Rahaman and others.	..	Rent — 882 4 0 Cess— 46 0 0	..

These estates and shares of estates and khas mahal tenures are being advertised for sale for the instalments of revenue which were due on or before the 30th Agrahayan, 1341 B.S., of which the latest date of payment was the 12th January 1935.

Noakhali, the 2nd March 1935.

A. WHITTAKER, Collector.

Notification A.

NOTICE is hereby given, under sections 6 and 13, Act XI of 1859 that the undermentioned estates and shares of estates in the district of Rangpur will be put up for sale at the office of the Collector of that district on 25th March 1935, at 11a.m., for arrears of revenue and other demands which by law are realizable as arrears of land revenue.

When in columns 5, 7 and 9 of the following statement it is stated that only a share is to be sold, it is to be understood that a separate account is kept for that share :—

Tauzi No.	Name of mahal and pargana.	Sadar jama of whole estate.	Whether the whole estate is to be sold.	If only a share is to be sold, specification of such share or shares.	Names of proprietors of property to be sold.	If only a share is to be sold, the sadar jama of such share.	If the whole estate is to be sold, the arrears due from it.	If only a share is to be sold, the arrears due from it.
1	2	3	4	5	6	7	8	9
		Rs. as. p.				Rs. as. p.	Rs. as. p.	Rs. as. p.
1/2	Bamandanga, pargana Bamandanga.	33,477 11 0	No ..	8 annas share of mauza Joydebpur taluk, group B. All other shares besides that specified will be excluded from the sale.	Bhabani Prasanna Lahiri and Krishna Prasanna Lahiri.	1,573 7 8	..	426 2 0
2	Ramdhan O'goyraha, pargana Fatepur.	4,517 2 11	Whole	....	Raja Gopal Lal Roy Bahadur.	..	1,221 13 5	..
18/1	Fatepur, hisya 3 annas, pargana Chakle Fatepur.	13,196 4 0	No ..	16 annas share of mauza Habu taluk, group C.	Protap Chandra Choudhury and others.	377 0 0	..	57 2 10
18/13	Ditto ..	13,196 4 0	No ..	16 annas share of mauza Kamalkachna taluk, group G. All other shares besides that specified will be excluded from the sale.	Bhabani Prasanna Lahiri and Krishna Prasanna Lahiri.	692 0 0	..	187 5 10
39 Res.	Shalhati O'goyraha, pargana Chakle Kazirhat.	2,522 13 0	No ..	14 annas share of the estate. All other shares besides that specified will be excluded from the sale.	Maulvi Syed Fazle Rahim and others.	2,207 7 4	..	597 5 2
47/4	Gorgram, pargana Chakle Kazirhat.	4,622 11 5	No ..	1 a. 18 g. 3 c. 1 k. 3 til 6⅔ bahar share of the estate. All other shares besides that specified will be excluded from the sale.	Bireswar Chatterjee, guardian of Annada Mohan Das and Sachindra Mohan Das.	560 13 4	..	151 14 11
48	Joychandi, O'goyraha, pargana Chakle Kazirhat.	1,544 10 5	Whole	....	Ramani Mohan Chowdhury.	..	418 2 1	..
50/1	Ketkibari O'goyraha, pargana Chakle Kazirhat.	1,544 5 8	No ..	6 as. 2 g. 3 c. share of the estate.	Munshi Amiruddin Sarker and others.	596 0 4	..	155 7 5
50/2	Ditto ..	1,544 5 8	No ..	4 annas share of the estate. All other shares besides that specified will be excluded from the sale.	Abdur Rahman Choudhury, motwalli of Alam Biditar Jumma Masjid.	386 1 5	..	107 5 3
51	Suradhan O'goyraha, pargana Chakle Kazirhat.	2,581 5 7	Whole	....	Raja Gopal Lal Roy Bahadur.	..	699 11 9	..
59 Res.	Matukpur O'goyraha, pargana Chakle Kazirhat.	778 11 0	No ..	16 annas share of mauza Charalkhola, group A. 6 as. 11 g. 2 c. share of mauza Matukpur, group B. All other shares besides that specified will be excluded from the sale.	Bidyat Lata Debi, guardian of Harendra Chandra Goswami and Indu Bhusan Goswami and others. Bhujanga Bhusan Haldar and others.	557 10 3	..	151 2 0
64	Jamirbari O'goyraha, pargana Chakle Kazirhat.	1,647 2 8	Whole	....	Brindaban Chandra Roy Choudhury.	..	446 14 11	..
73/5	Haroa O'goyraha, hisya 7 annas, parganas Chakle Kazirhat, Fatepur and pargana Kundi.	3,922 13 3	No ..	16 annas share of mauza Harirampur goyraha, group A. All other shares besides that specified will be excluded from the sale.	Ramani Mohan Choudhury.	1,580 3 3	..	698 7 3
93	Bisandal O'goyraha, pargana Chakle Kazirhat.	1,442 15 10	Whole	....	Jatindra Mohan Roy Choudhury and others.	..	98 2 1	..
95	Daud, pargana Chakle Kazirhat.	603 4 1	Do. ..	....	Nripendra Narayan Rudra.	..	163 3 2	..

Tauzi No.	Name of mahal and pargana.	Sadar jama of whole estate.	Whether the whole estate is to be sold.	If only a share is to be sold, specification of such share or shares.	Names of proprietors of property to be sold.	If only a share is to be sold the sadar jama of such share.	If the whole estate is to sold, the arrears due from it.	If only a share is to be sold, the arrears due from it.
1	2	3	4	5	6	7	8	9
		Rs. as. p.				Rs. as. p.	Rs. a. p.	Rs. as. p.
97	Charcharabari O'goyraha, pargana Chakle Kazirhat.	680 7 5	Whole	....	Akshoy Lal Saha and others.	..	183 7 6	..
99	Bahalipara, hisya 10 annas, pargana Kazirhat.	570 0 0	Do.	....	Mihir Kumar Lahiri and others.	..	154 10 9	..
100	Shimulbari, pargana Chakle Kazirhat.	526 8 1	Do.	....	Nityaradha Dasya and others.	..	142 14 11	..
101	Latifchapra, pargana Chakle Kazirhat.	971 6 2	Do.	....	Raja Gopal Lal Roy Bahadur.	..	263 7 5	..
103	Ambari, pargana Chakle Kazirhat.	2,618 7 3	Do.	....	Shah Md. Khalil Uddin Hyder Abu Jober and others.	..	708 4 4	..
104	Bengmari, pargana Chakle Kazirhat.	1,322 9 7	Do.	....	Nityaradha Dasya and others.	..	358 6 5	..
106 Res.	Tupamari, pargana Chakle Kazirhat.	2,078 2 7	No ..	14 as. 16 g. 2 c. 2 kt. share of the estate.	Feshru Mohammad Shah Choudhury and others.	1,926 10 1	..	522 10 0
106/1	Ditto ..	2,078 2 7	No ..	1 a. 3 g. 1 c. 1 kt. share of the estate. All other shares besides that specified will be excluded from the sale.	Ditto ..	151 8 6	..	41 10 3
109	Kadikol O'goyraha, Motalak lat Cheranga, hisya 6 as. 4 g. 1 c. 7dt., pargana Chakle Kazirhat.	607 1 11	Whole	....	Rakhal Chandra Choudhury.	..	159 7 11	..
113	Cheranga, pargana Chakle Kazirhat.	831 4 4	Do.	....	Nityaradha Dasya and others.	..	225 0 0	..
120 Res.	Kuchiamor, pargana Chakle Kazirhat.	1,003 12 3	No	16 annas share of mauza Bahalipara, group A. 9 as. 5 g. 1 c. 1 kt. 12 til share of mauza Kuchiamore, group B. All other shares besides that specified will be excluded from the sale.	Kumud Kumar Lahiri and others.	656 12 2	..	179 5 8
124	Panga, pargana Chakle Kazirhat.	1,687 1 0	Whole	....	Shibendra Narayan Saha Choudhury and others.	..	457 9 6	..
125	Harinchara, 8 annas, pargana Chakle Kazirhat.	852 5 0	Do. ..	....	Raja Gopal Lal Roy Bahadur.	..	230 14 11	..
130 Res.	Putimari, hisya 14 as. 5 g. 3 c. 3 dt., pargana Chakle Kazirhat.	1,690 2 7	No ..	13 as. 15 g. 1 c. 1 kt. 2 dt. 1 job share of the estate. All other shares besides that specified will be excluded from the sale.	Maulvi Syed Fazlur Rahman and others.	1,457 12 7	..	137 13 0
133	Baragachha O'goyraha, pargana Chakle Kazirhat.	933 15 4	Whole	....	Raja Gopal Lal Roy Bahadur.	..	252 12 10	..
137	Ramnagar, pargana Chakle Kazirhat.	1,341 15 1	Do. ..	....	Ditto ..	..	363 11 8	..
145 Res.	Ramkala, pargana Chakle Kazirhat.	1,659 11 9	No ..	10 as. 2 p. share of the estate.	Khodeja Khatun Bibi and others.	1,050 9 11	..	140 0 6
145/1	Ditto ..	1,659 11 9	No ..	5 as. 10 p. share of the estate. All other shares besides that specified will be excluded from the sale.	Feshru Mohammad Shaha Choudhury and others.	605 1 10	..	169 0 1
147 Res.	Shakhati O'goyraha, pargana Tepa.	2,163 0 1	No ..	10 as. 8 p. share of the estate. All other shares besides that specified will be excluded from sale.	Jatindra Mohan Roy Choudhury and others.	1,442 0 1	..	146 9 6
156	Udashi, hisya 8 annas, pargana Udashi.	2,475 10 5	Whole	....	Raja Gopal Lal Roy Bahadur. ..	..	670 0 6	..
164	Kundi, hisya 1 a. 5 g., pargana Kundi.	3,196 14 0	Do. ..	....	Kshitish Chandra Acharyya Chowdhury.	..	865 3 7	..

Tauzi No.	Name of mahal and pargana	Sadar jama of whole estate.	Whether the whole estate is to be sold.	If only a share is to be sold, specification of such share or shares.	Names of proprietors of property to be sold.	If only a share is to be sold, the sadar jama of such share.	If the whole estate is to be sold the arrears due from it.	If only a share is to be sold, the arrears due from it.
1	2	3	4	5	6	7	8	9
		Rs. as. p.				Rs. as. p.	Rs. as. p.	Rs. as. p.
160	Chandanpat O'goyraha, pargana Kundi.	2,869 8 7	Whole ..	....	Brindaban Chandra Ray Chowdhury.	..	778 10 8	..
170	Panbari O'goyraha, pargana Kundi.	623 9 2	Do. ..	....	Mrityunjoy Ray Chowdhury and others, sebait of Shyama Sundari Thakurani.	..	169 3 4	..
176	Maymantapur, hisya 8 annas, pargana Maymantapur.	1,048 8 10	Do. ..	....	Raja Gopal Lal Roy Bahadur.	..	350 14 11	..
206	Lakshmanpur, hisya 8 annas, pargana Swaruppur.	1,013 13 10	Do. ..	....	Bejoy Nath Ray Chowdhury.	..	211 0 3	..
211	Durgapur O'gayraha, pargana Fatezangpur.	1,223 7 5	Do. ..	....	Maulvi Syed Fazle Rahim and others.	..	367 15 11	..
223	Kurshakhamar O'goyraha, hisya 5as. 11p. 5kt., pargana Payraband.	943 1 4	Do. ..	....	Abezannessa Khatun Chowdhurani and others.	..	326 6 4	..
229	Ambari O'goyraha, pargana Perl.	806 14 6	Do. ..	....	Raja Gopal Lal Roy Bahadur.	..	288 0 0	..
232 Res.	Chak Gopal O'goyraha, pargana Sarhatta.	1,402 4 11	No ..	5as. 6g. 2c. 2kt. share of mauza Ekdala, group B. 11gds. 3c. 1kt. 2job share of mauza Ekdala, group C. 3as. 11g. 1kt. 1dt. share of mauza Ekdala, group D. 1a. 9g. 2c. 1kt. 1dt. 2 job share of mauza Ekdala, group E.	Indumati Debi and others.	155 11 7	..	39 12 0
232/1	Ditto ..	1,402 4 11	No ..	16 annas share of mauza Nurpur, group A. 10as. 1g. 1c. 2kt. 1½dt. share of mauza Nurpur, group C. 10as. 13g. 1c. 1kt. share of mauza Nurpur, group E.	Suresh Chandra Sen Gupta and others.	934 14 0	..	245 5 5
232/4	Ditto ..	1,402 4 11	No ..	5 as. 6 g. 2 c. 2 kt. share of mauza Ekdala, group B.	Ananta Kumar Roy, guardian of Amal Kumar Roy.	16 8 9	..	8 1 7
232/7	Ditto ..	1,402 4 11	No ..	5 as. 6 g. 2 c. 2 kt. share of mauza Ekdala, group B. 1 a. 15 g. 2 c. 2 dt. share of mauza Ekdala, group C. 5 as. 6 g. 2 c. 2 kt. share of mauza Ekdala, group D. 1 a. 15 g. 3 c. 2 dt. share of mauza Ekdala, group E. All other shares besides that specified will be excluded from the sale.	Karuna Kanta Roy and others.	155 13 0	..	40 14 4
243	Mithipur O'goyraha, pargana Barabila.	4,407 0 0	Whole	....	Jatindra Mohan Roy Choudhury.	..	366 10 6	..
245/2	Badalkhan O'goyraha, hisya 9 as. 6 g., pargana Amdahar.	3,264 3 6	No ..	4 as. 6 p. share of the estate. All other shares besides that specified will be excluded from the sale.	Protap Chandra Choudhury and others.	918 1 0	..	289 7 7
247	Putimari O'goyraha, pargana Andua.	3,279 12 4	Whole	....	Raja Gopal Lal Roy Bahadur.	..	1,088 0 0	..
249/2	Durgapur Chak O'goyraha, hisya 7 as. 10 g., pargana Sarhatta.	1,892 15 8	No ..	1 a. 8 g. 1 c. 2 kt. ½ kag share of mauza Durgapur Chak, groups A, B, C.	Md. Nural Islam and others.	168 3 7	..	56 4 6
249/3	Ditto ..	1,892 15 8	No ..	5 as. 4 g. 1 c. ½ kt. share of mauza Durgapur Chak, groups A, B, C.	Abul Fazal Choudhury.	617 1 3	..	205 10 8
249/4	Ditto ..	1,892 15 8	No ..	1a. 5g. 2c. share of mauza Durgapur Chak, groups A, B, C.	Ditto ..	71 7 9	..	23 11 4
249/5	Ditto ..	1,892 15 8	No ..	1a. 5g. 2c. share of mauza Durgapur Chak, groups A, B, C.	Ditto ..	50 4 9	..	16 11 8

Tauzi No.	Name of mahal and pargana.	Sadar jama of whole estate.	Whether the whole estate is to be sold.	If only a share is to be sold, specification of such share or shares.	Name of proprietors of property to be sold.	If only a share is to be sold, the sadar jama of such share.	If the whole estate is to be sold, the arrears due from it.	If only a share is to be sold, the arrears due from it.
1	2	3	4	5	6	7	8	9
		Rs. a. p.				Rs. as. p.	Rs. as. p.	Rs. as. p.
249/6	Durgapur, Chak O'goyraha, hisya 7 as. 10 g., pargana Sarhatta,	1,892 15 8	No ..	7as. 7g. 2c. share of mauza Durgapur Chak, groups A, B, C.	Muzaffar Hossain Khan Choudhury.	296 4 3	..	98 15 3
249/8	Ditto ..	1,892 15 8	No ..	1a. 6g. 1c. share of mauza Durgapur Chak, groups A, C. All other shares besides that specified will be excluded from the sale.	Hafizuddin Mia Talukdar.	89 0 0	..	29 10 7
261	Fulchowki O'goyraha, pargana Sarhatta.	1,379 7 9	Whole	....	Kali Kumar Saha	..	86 2 4	..
265 Res.	Chapra O'goyraha, parganas Chakle Kazirhat, Fatepur, Bodapurbabhag, parganas Basatti, Chakle Kakina, pargana Udashi.	8,936 8 10	No ..	12 annas share of mauza Mahabat, group A.	Manir Uddin Ahmad and others.	444 0 0	..	144 11 11
265/11	Ditto ..	8,936 8 10	No ..	16 annas share of mauza Ramdakua, group F.	Raja Gopal Lal Roy Bahadur.	634 2 0	..	168 14 7
265/14	Ditto ..	8,936 8 10	No ..	8 annas share of mauza Chhinai, group H.	Khan Sahib Md. Khaimuddin Choudhury.	335 8 1	..	88 9 8
265/15	Ditto ..	8,936 8 10	No ..	4 annas share of mauza Chhinai, group H.	Ditto ..	167 12 1	..	44 12 1
265/16	Ditto ..	8,936 8 10	No ..	4 annas share of mauza Chhinai, group H. All other shares besides that specified will be excluded from the sale.	Ditto ..	167 12 2	..	17 7 11
318 Res.	Sangalsi, pargana Chakle Kazirhat.	1,027 3 0	No ..	8 annas share of the estate	Brindaban Chandra Ray, Niranjan Ray and others.	513 9 6	..	114 11 2
318/1	Ditto ..	1,027 3 0	No	8 annas share of the estate. All other shares besides that specified will be excluded from the sale.	Subasini Majumdar and others.	513 9 6	..	114 8 2
526	Muradpur Kharda O'gayraha, hisya 8 annas, pargana Payraband.	2,532 15 6	Whole	....	Raja Gopal Lal Roy Bahadur.	..	686 6 5	..
527	Hamidpur O'gayraha, Motalak Jot Gokul, hisya 8 annas, pargana Payraband.	1,532 4 6	Do.	....	Ditto ..	..	415 7 5	..
648	Osmanpur O'gayraha, hisya 3 as. 8p., pargana Barabila.	2,934 5 6	Do. ..	....	Kalipada Chakravarty.	..	977 12 5	..
654 Res.	Ramchandrapur, pargana Bairisakhpala.	2,371 12 11	No ..	2 as. 13 g. 2⅔ kg. share of the estate.	Bireswar Chatterjee, common manager.	394 6 9	..	142 3 3
654/2	Ditto ..	2,371 12 11	No ..	1 a. 12 g. 2 c. share of the estate.	Ditto ..	240 14 3	..	86 14 9
654/3	Ditto ..	2,371 12 11	No ..	4 as. 18 g. share of the estate.	Ditto ..	726 5 11	..	262 0 4
654/4	Ditto ..	2,371 12 11	No ..	4 as. 14 g. 1⅓ c. share of the estate.	Ditto ..	698 13 3	..	251 15 6
654/5	Ditto ..	2,371 12 11	No ..	2 as. 2 g. share of the estate. All other shares besides that specified will be excluded from the sale.	Ditto ..	311 4 9	..	112 3 5
668/1	Siksahar, pargana Siksahar.	3,099 10 0	No	8 as. 10 g. share of mauza Amlagachhi, groups A to L.	Gaibandha Loan Office.	1,647 4 5	..	477 11 7
668/5	Ditto ..	3,099 10 0	No ..	1 a. 15 g. 1 kg. 5 til share of mauza Amlagachhi, group A. 1 a. 10 g. 2 kg. share of mauza Amlagachhi, group B. 1 a. 10 g. share of mauza Amlagachhi, groups C, D, F, G, H. 3 as. 9 g. share of mauza Amlagachhi, group E, I to L. All other shares besides that specified will be excluded from the sale.	Charu Chandra Ray and others.	559 6 9	..	162 4 0

Tauzi No.	Name of mahal and pargana.	Sadar jama of whole estate.	Whether the whole estate is to be sold.	If only a share is to be sold, specification of such share or shares.	Names of proprietors of property to be sold.	If only a share is to be sold, the sadar jama of such share.	If the whole estate is to be sold, the arrears due from it.	If only a share is to be sold, the arrears due from it.
1	2	3	4	5	6	7	8	9
		Rs. as. p.				Rs. as. p.	Rs. as. p.	Rs. as. p.
720	Lalbari kismat pargana, hisya 4 as. 10 g., pargana Lalbari.	1,135 14 6	Whole	....	Mozahar Uddin and others.	..	198 11 6	..
721	Lalbari kismat pargana, hisya 4 annas, pargana Lalbari.	1,009 11 3	Do. ..	....	Muhammad Esarat Ulla Chowdhury and others.	..	282 4 0	..
793	Nagendra Nath Mukherjee, pargana Kazirhat.	1,120 1 11	Do. ..	....	Nagendra Nath Mukherjee.	..	303 0 9	..
794	Debendra Nath Mukherjee, pargana Kazirhat.	1,120 1 11	Do. ..	....	Debendra Nath Mukherjee.	..	303 0 9	..
795	Amala Prosad Mukherjee O'goyraha, pargana Kazirhat.	1,120 1 11	Do. ..	....	Amala Prosad Mukherjee and others.	..	303 0 9	..
796	Kali Sadhan Mukherjee, O'goyraha, pargana Kazirhat.	1,120 1 11	Do. ..	....	Kali Sadhan Mukherjee and others.	..	303 0 9	..
800	Joga Maya Dasi O'goyraha, pargana Kazirhat.	770 2 4	Do. ..	....	Bhujendra Nath Biswas and others.	..	208 5 10	..
801	Jagannath Khan, pargana Kazirhat.	1,588 6 4	Do. ..	....	Sourendra Nath Khan and others.	..	429 11 11	..

The abovementioned estates are being advertised for sale for instalments of revenue which were due on or before the 30th Agrahayan, 1341 B.S., of which the latest date of payment was 12th January 1935 A.D.

Rangpur, the 5th March 1935. N. M. AYYAR, Collector.

Notification.

NOTICE is hereby given, under sections 6 and 13, Act XI of 1859, that the undermentioned estates and shares of estates in the district of Birbhum will be put up for sale at the office of the Collector of that district on the 26th March 1935, at 12 noon, for arrears of revenue and other demands which by law are realisable as arrears of land revenue.

When in columns 5, 7 and 9 of the following statement it is stated that only a share is to be sold, it is to be understood that a separate account is kept for that share :—

Tauzi No.	Name of mahal and pargana	Sadar jama of whole estate.	Whether the whole estate is to be sold.	If only a share is to be sold, specification of such share or shares.	Names of proprietors of property to be sold.	If only a share is to be sold, the sadar jama of such share.	If the whole estate is to be sold the arrears due from it.	If only a share is to be sold, the arrears due from it.
1	2	3	4	5	6	7	8	9
		Rs a p				Rs. a p.	Rs a p	Rs. a. p.
2	Sahalampur, pargana Sahalampur.	52,008 5 0		Group I—8gds. 3karas 1 kranti 13tils share of mauzas Agowa and others Group II—12 as. 6 gds. 2 karas 2 krantis share of mauzas Kapastari and others. Group—III 8gds. 3 karas 1 kranti 13 tils share of mauzas Pirpur, etc. Group IV—8gds. 3 karas 1 kranti 13 tils share of mauzas Patlapur, etc. Group V—8gds 3 karas 1 kranti 13tils share of mauzas Belsara, etc. Group VI—8gds. 3 karas 1 kranti 13 tils share of mauzas Bonbandhura, etc. Group VII—8 gds. 3 karas 1 kranti 13 tils share of mauza Gaura. Group VIII—8 gds 3 karas 1 kranti 13 tils share of mauzas Kanaipur, etc., 12 annas share of mauza Loba in residuary excepting separate accounts Nos 4 to 11. All other shares than that specified will be excluded from the sale.	Shyamapada Basu and others.	7,645 10 8	..	2,089 10 9
4	Senbhum, pargana Senbhum.	41,132 10 0	..	16 annas share of mauzas Binuria and others, 8 annas share of mauzas Chowmondalpur, etc., in separate account No. 1.	Sudhakar Mazumdar	849 0 8	..	122 11 8
4	Ditto ..	41,132 10 0	..	Group I—5as. 6gds. 2 karas 2 krantis share of mauzas Kankhutia, etc. Groups II and III—5as. 6gds 2 karas 2 krantis share of mauza Choupahari Jungle. Group IV—5 as. 6 gds. 2 karas 2 krantis share of mauzas Radhanagar, etc. Group XIV—16 annas share of mauzas Jahanabad, etc. Group XV—16 annas share of mauzas Radhanagar, etc., in separate account No. 3.	Subhasini Dasi ..	15,577 2 6	..	1,685 11 8
4	Ditto ..	41,132 10 0	..	Group I—4gds. 1 kara 2 krantis 6 tils share of mauzas Kankhutia, etc. Group II—4 gds. 1 kara 2 krantis 5 tils share of mauzas Choupahari Jungle. Group III—4 gds. 1 kara 2 krantis 7 tils share of mauzas Choupahari Jungle. Group IV—4gds. 1 kara 2 krantis 7 tils share of mauzas Radhanagar, etc. Group V—13gds. 1 kara 1 kranti share of mauzas Adityapur, etc. Group VI—8 annas share of mauzas Nachansaha, etc. Group VII—9 as. 6gds. 2 karas 2 krantis share of mauza Gitgram. Group XIII—4 annas share of mauzas Nurpur, etc. Group XVI—4 annas share of mauzas Chandipur, etc. Group XVII—1gd. 3 karas 2 krantis 8 tils share of mauzas Muluk, etc., in separate account No. 11.	Salla Bala Debi	1,737 5 6	..	760 0 9

Tauzi No.	Name of mahal and pargana.	Sadar jama of whole estate.	Whether the whole estate is to be sold.	If only a share is to be sold, specification of such share or shares.	Names of proprietors of property to be sold.	If only a share is to be sold, the sadar jama of such share.	If the whole estate is to be sold, the arrears due from it.	If only a share is to be sold, the arrears due from it.
1	2	3	4	5	6	7	8	9
		Rs. a. p.				Rs. a. p.	Rs. a. p.	Rs. a. p.
4	Senbhum, pargana Senbhum.	41,132 10 0	..	Group I—1 a. 15 gds. 2 karas 14 tils share of mauzas Kankhutia, etc. Group II—1 a. 15gds. 2 karas 13 tils share of mauzas Choupahari Jungle. Group IV—1a. 15gds. 2 karas 14 tils share of mauzas Radhanagar, etc. Group XXI—4 as. 16gds. share of mauza Hariharpur *alias* Mukunda. Group XXII—16 annas share of mauzas Narayanpur, etc. Group XXIII (*a*)—12 annas share of mauza Ruppur in separate account No. 12.	Sarala Bala Sinha	4,950 14 3	..	2,1[illegible] 6 6
4	Ditto ..	41,132 10 0	..	Group XXIV—16 annas share of mauzas Murandihi, etc., in separate account No. 18.	Rajani Kanta Biswas.	2,689 13 6	..	1,165 9 9
4	Ditto ..	41,132 10 0	..	Group I—1a. 15gds. 2 karas 16 tils share of mauzas Kankhutia, etc. Group II—1a. 15gds. 2 karas 14 tils share of mauza Choupahari Jungle. Group IV—1a. 15gds. 2 karas 14 tils share of mauzas Radhanagar, etc. Group XXII—8 annas share of mauzas Choumondalpur, etc. Group XXI—5 as. 2gds. 2 karas share of mauza Hariharpur *alias* Mukunda. Group XXV—16 annas share of mauza Goltikuri, etc., in separate account No. 20.	Kedar Nath Ghose and others.	1,882 4 4	..	820 0 0
4	Ditto ..	41,132 10 0	..	Group I—5 gds. 3 karas 2 krantis 1 til share of mauzas Kankhutia, etc., 11 gds. 3 karas 1 kranti 4 tils share of mauza Choupahari Jungle. Group III—11 gds. 3 karas 1 kranti 5 tils share of mauza Choupahari Jungle. Group IV—5 gds. 3 karas 2 krantis 1 til share of mauzas Radhanagar, etc. Group V—1 a. 15 gds. 2 karas 13 tils share of mauzas Adityapur, etc. Group X—16 annas share of mauzas Mahisadal, etc., in separate account No. 25. All other shares than that specified will be excluded from the sale.	Sourindra Narayan Sinha.	1,309 2 6	..	467 4 9
10	Dheka, pargana Swarupsing.	16,707 4 0	Whole estate, 16 annas share.	....	Mahanta Srimat Banwari Mukunda Das Nandi Dalal.	..	3,200 0 0	..
14	Bhurkunda, pargana Bhurkunda.	15,142 9 0	..	2 as. 13 gds. 1 kara 1 kranti share in separate account No. 1. All other shares than that specified will be excluded from the sale.	Birendra Nath Mustafi and others.	2,523 11 6	..	546 9 4
16	Maheswarpur, pargana Senbhum.	12,897 8 7	..	Group XII—4 annas share of mauzas Baharampur, Paisa, etc., in separate account No. 8. All other shares than that specified will be excluded from the sale.	Charu Chandra Sinha and others.	758 7 0	..	331 13 0
18	Kalika Krishnanagar, pargana Joynujjal.	6,234 6 0	Whole estate, 16 annas share.	....	Kumar Promotha Nath Malia Bahadur and others.	..	584 10 5	..
19	Kuniara, pargana Ichhapukhuria.	5,695 14 0	..	2 as. 6 gds. 2 karas 2 krantis share of mauzas Bujuruk Baro, etc., 2 as. 8 gds. 1 kranti 10 tils share of mauza Daurka, 18 gds. 3 karas 2 krantis 10 tils share of mauza Barowan, etc., in separate account No. 2. All other shares than that specified will be excluded from the sale.	Basanta Kumari Debi (trustee).	789 14 8	..	350 6 6

Tauzi No.	Name of mahal and pargana.	Sadar jama of whole estate.	Whether the whole estate is to be sold.	If only a share is to be sold, specification of such share or shares.	Names of proprietors of property to be sold.	If only a share is to be sold, the sadar jama of such share.	If the whole estate is to be sold, the arrears due from it.	In only a share is to be sold, the arrears due from it.
1	2	3	4	5	6	7	8	9
		Rs. a. p.				Rs. a. p.	Rs. a. p.	Rs. a. p.
20	Panchpara, pargana Ichhapukhuria.	4,062 5 0	..	9 as. 4 gds. 6 tils share of mauzas Purba Durgapur, etc., in residuary excepting separate account Nos. 1 to 5.	Maha Bharat Dutta.	2,336 2 6	..	316 12 3
20	Ditto ..	4,062 5 0	..	2 as. 19 gds. 2 karas share in separate account No. 3. All other shares than that specified will be excluded from the sale.	Suresh Chandra Dutta.	755 5 6	..	221 15 6
	Balta, pargana Joynuddial.	10,850 7 0	..	2 as. 10 gds. share of mauzas Karchadihi, etc., 1 a. 13 gds. 1 kara 1 kranti share of mauzas Khandagram, etc., in separate account No. 8. All other shares that that specified will be excluded from the sale.	Harihar Nath Das (sebait).	891 2 1	..	384 14 4
22	Sainthia, pargana Moureswarsabek.	15,151 5 0	..	2 annas share in residuary excepting separate account Nos. 1 to 14.	Hari Charan Ghose and others.	1,893 0 8	..	274 6 10
22	Ditto ..	15,151 5 0	..	2 annas share in separate account No. 4.	Panchanan Ghose	1,894 12 8	..	828 12 6
22	Ditto ..	15,151 5 0	..	13 gds. 1 kara 1 kranti share in separate account No. 6.	Sarat Kumar Ghose.	631 5 0	..	276 4 0
22	Ditto ..	15,151 5 0	..	13 gds. 1 kara 1 kranti share in separate account No. 12.	Tarapada Ghose	631 5 0	..	276 4 0
22	Ditto ..	15,151 5 0	..	13 gds. 1 kara 1 kranti share in separate account No. 14. All other shares than that specified will be excluded from the sale.	Prosad Chandra Ghose.	631 5 0	..	276 4 0
25	Indus, pargana Kutubpur.	5,687 2 8	..	8 annas share in separate account No. 1. All other shares than that specified will be excluded from the sale.	Kali Das Das ..	2,843 9 5	..	629 2 1
26	Krishnanagar, pargana Barbaksingh.	5,894 9 6	..	14 as. 10 gds. 1 kara 10 tils share in residuary excepting separate account Nos. 1 and 2. All other shares than that specified will be excluded from the sale.	Bipin Behari Sarkar and others.	4,894 5 0	..	39 1 4
28	Dabuk, pargana Swarupsing.	1,395 10 0	..	7 as. 10 gds. share in residuary excepting separate account No. 1.	Nalini Ranjan Sinha and others.	654 3 0	..	211 8 6
28	Ditto ..	1,395 10 0	..	8 as. 10 gds. share in separate account No. 1.	Kala Chand Das and others.	741 7 0	..	136 2 6
31	Purandarpur, pargana Purandarpur.	6,299 6 0	..	2 as. 10 gds. share in separate account No. 1.	Kumar Brahma Nr. Chakrabarty.	984 4 5	..	425 9 0
31	Ditto ..	6,299 6 0	..	2 annas share in separate account No. 3.	Ram Ranjan Hati and others.	787 7 10	..	340 4 4
31	Ditto ..	6,299 6 0	..	2 as. 10 gds. share in separate account No. 6. All other shares than that specified will be excluded from the sale.	Ram Ranjan Mukherjee.	984 4 5	..	325 5 5
66	Murundi, pargana Kutabpur.	1,531 15 0	..	5 as. 6 gds. 2 karas 2 krantis share in residuary excepting separate account Nos. 1 and 2.	Suprobhat Chandra and others.	510 10 4	..	138 10 4
66	Ditto ..	1,531 15 0	..	5 as. 6 gds. 2 karas 2 krantis share in separate account No. 1.	Dharma Das Chandra and others.	510 10 4	..	138 10 4
66	Ditto ..	1,531 15 0	..	5 as. 6 gds. 2 karas 2 krantis share in separate account No. 2.	Dhanapati Chandra and others.	510 10 4	..	138 10 4
75	Turigram, pargana Sahajadpur.	1,508 0 0	..	14 as. 9 gds. 1 kara 1 kranti share in residuary excepting separate account No. 1. All other shares than that specified will be excluded from the sale.	Abedan Nessa Bibi and others.	1,363 7 6	..	96 15 11

Tauzi No.	Name of mahal and pargana.	Sadar jama of whole estate.	Whether the whole estate is to be sold.	If only a share is to be sold, specification of such share or shares.	Names of proprietors of property to be sold.	If only a share is to be sold, the sadar jama of such share.	If the whole estate is to be sold, the arrears due from it.	If only a share is to be sold, the arrears due from it.
1	2	3	4	5	6	7	8	9
		Rs. a. p.				Rs. a. p.	Rs. a. p.	Rs. a. p.
84	Mandari, pargana Khargram.	719 5 0	Whole estate, 16 annas share.	....	Maulvi Golam Gous and others.	..	301 0 0	..
89	Indus, pargana Kutubpur.	3,876 4 0	..	9 as. 10 gds. share of mauzas Indus and Amnahar, 10as. 13 gds. 1 kara. 1 kranti share of mauza Saripa, 16 annas share of mauzas, Tentulbandh and Sripatipur, 1 a. 12 gds. 2 karas share of mauzas Maheshpur, Purba Nowapara Purbakadipur and Lohadda in residuary share excepting separate account Nos. 6 and 8 to 13. All other shares than that specified will be excluded from the sale.	Sukumar Mukherjee and others.	913 1 11	..	28 13 6
90	Bousanka, pargana Joynujital.	3,772 3 5	Whole estate, 16 annas share.	....	Ram Ranjan Hajra and others.	..	1,626 4 8	..
94	Gokulata, pargana Gokulata.	3,250 14 0	..	8 annas share in separate account No. 1.	Chinmoyee Debi and others.	1,625 7 0	..	624 15 2
94	Ditto ..	3,250 14 0	..	3 as. 15 gds. 2 karas 13 tils share in separate account No. 4. All other shares than that specified will be excluded from the sale.	Minor Dwijendra Kumar Roy and others.	767 9 1	..	295 1 9
103	Kharua, pargana Khatanga.	1,383 3 0	..	5 as. 17 gds. 2 krantis share in residuary excepting separate account Nos. 1 to 7 and 10 to 11 and 12.	Bepin Behari Chatterjee and others.	504 6 9	..	5 0 9
107	Punur, pargana Akbarsahi.	1,176 13 0	..	7 as. 18 gds. 3 karas share in residuary excepting separate account Nos. 5 and 6. All other shares than that specified will be excluded from the sale.	Panchanan Bhattacharjee and others.	583 12 10	..	158 11 8
109	Daurka, pargana Ichhapukhuria.	1,803 1 0	..	5 annas share of mauzas Sonachitura and Monachitura, 16 annas share of mauza Sitapur, 5 as. 4 gds. 1 kara 2 krantis 15 tils share of mauza Daurka in residuary excepting separate account Nos. 1 and 2. All other shares than that specified will be excluded from the sale.	Sailendra Kumar Roy and others.	582 11 0	..	232 14
111	Rasowan, pargana Barra.	4,173 14 1	..	5 as. 19 gds. 3 karas 1 kranti 5 tils share in residuary excepting separate account Nos. 1 to 6 and 8 to 11.	Sasthi Kinkar Banerjee and others.	1,562 14 2	..	194 15 5
111	Ditto ..	4,173 14 1	..	2 as. 5 gds. share in separate account No. 1.	Tara Sankar Banerjee and others.	588 1 1	..	86 1 0
111	Ditto ..	4,173 14 1	..	2 annas share in separate account No. 3. All other shares than that specified will be excluded from the sale.	Tara Prasanna Mukherji and others.	521 12 7	..	76 15 0
114	Bongram, pargana Barbaksing.	2,526 4 0	..	3 as. 4 gds share in residuary excepting separate account Nos. 1 to 10.	Provash Ch. Mitra	505 3 11	..	218 3 1
114	Ditto ..	2,526 4 0	..	3 as. 4 gds. share in separate account No. 2. All other shares than that specified will be excluded from the sale.	Khitish Ch. Mitra and others.	505 4 0	..	48 3 0
125	Kanutia, pargana Swarupsing.	1,640 6 0	Whole estate, 16 annas share.	....	Gobinda Chandra Mazumdar and others.	..	712 0 0	..
143	Shyamsundarpur, pargana Barbaksing.	2,113 13 0	..	4 as. 6 gds. 1 kara share in residuary excepting separate account Nos. 1 and 2. All other shares than that specified will be excluded from the sale.	Benoy Krishna Chaudhuri.	569 11 9	..	140 3 0

Tauzi No.	Name of mahal and pargana.	Sadar jama of whole estate.	Whether the whole estate is to be sold.	If only a share is to be sold, specification of such share or shares.	Names of proprietors of property to be sold.	If only a share is to be sold, the sadar jama of such share.	If the whole estate is to be sold, the arrears due from it.	If only a share is to be sold, the arrears due from it.
1	2	3	4	5	6	7	8	9
		Rs. a. p.				Rs. a. p.	Rs. a. p.	Rs. a. p.
153	Bahiri, pargana Barbaising.	2,014 8 0	..	13 as. 3 gds. 1 kara 1 kranti share in residuary excepting separate account Nos. 1 and 2. All other shares than that specified will be excluded from the sale.	Tulasi Ram Choudhuri and others.	1,657 12 2	..	0 6 8
158	Kadipur, pargana Kutubpur.	851 4 0	Whole estate, 16 annas share.	....	Srish Chandra Chaudhuri and others.	..	368 0 0	..
159	Mistuli, pargana Kutubpur.	886 7 0	..	11 as. 10 gds. share in residuary excepting separate account No. 1. All other shares than that specified will be excluded from the sale.	Hari Ranjan Saha and others.	637 2 0	..	83 8 9
167	Januri, pargana Khatanga.	978 11 0	Whole estate, 16 annas share.	....	Roy Kalika Nanda Mukherjee Bahadur and others.	..	422 11 0	..
172	Majhigram, pargana Khatanga.	3,422 4 0	..	12 annas share in residuary excepting separate account No. 1.	Munshi Golam Gous and others.	2,566 11 0	..	564 0 0
172	Ditto ..	3,422 4 0	..	4 annas share in separate account No. 1.	Shyama Pada Roy and others.	855 9 0	..	70 8 0
173	Rangtara, pargana Swarupsing.	896 8 0	..	13 as. 16 gds. 2 karas 2 krantis share in residuary excepting separate account No. 2. All other shares than that specified will be excluded from the sale.	Ashutosh Ghosal and others.	775 1 7	..	336 5 2
212	Shyambati Sashghar, pargana Swarupsing.	1,176 13 0	..	11 as. 7 gds. 2 karas 13 tils share in residuary excepting separate account No. 1. All other shares than that specified will be excluded from the sale.	Panchanan Choudhuri and others.	836 13 6	..	178 1 9
230	Nimtikuri, pargana Haripur.	602 10 0	Whole estate, 16 annas share.	....	Mahesh Ch. Dutta and others.	..	61 7 7	..
240	Damdama, pargana Alinagar.	1,482 11 0	..	6 as. 5 gds. share of mauzas Abadanga, Damdama, Nijuri, Maligram, Kenduajulai, Hatora, Sangra, Purpaldihi, Tentuldihi, Patharghata, Layekpur and Tripuraripur in separate account No. 1. All other shares than that specified will be excluded from the sale.	Shyama Pada Roy and others.	579 2 10	..	251 2 9
451	Bakhul, pargana Kutubpur.	2,806 5 0	..	6 annas share in residuary excepting separate account Nos. 1 to 7.	Dharani Dhar Banerjee and others.	1,052 4 5	.. —	300 6 7
451	Ditto ..	2,806 5 0	..	4 as. 1 kara share in separate account No. 7. All other shares than that specified will be excluded from the sale.	Dharani Dhar Banerjee.	703 12 4	..	241 9 1
551	Jotemusa, pargana Joynujial.	1,013 10 0	..	16 annas share of mauzas Chhatarbandi, Simulia, Bheramari, Salan, Sunutia and Chhatarbandi, 3 as. 13 gds. 3 karas share of mauzas Donaipur, Ekdala, Ulandi, Araji Brahmandihi, Chhatarbandi and Bheramari in residuary excepting separate account Nos. 5 to 11. All other shares than that specified will be excluded from the sale.	Syed Saha Mahammad Abdul Hafiz and others.	600 11 0	..	221 4 10
580	Sahapur, pargana Swarupsing.	1,967 11 0	Whole estate, 16 annas share.	....	Rajendra Nath Pal and others.	..	878 0 0	..

Tauzi No.	Name of mahal and pargana.	Sadar jama of whole estate.	Whether the whole estate is to be sold.	If only a share is to be sold, specification of such share or shares.	Names of proprietors of property to be sold.	If only a share is to be sold, the sadar jama of such share.	If the whole estate is to be sold, the arrears due from it.	If only a share is to be sold, the arrears due from it.
1	2	3	4	5	6	7	8	9
		Rs. a. p.				Rs. a. p.	Rs. a. p.	Rs. a. p.
619	Kalikapur, pargana Nowanagar.	2,329 15 0	..	8 as. 19 gds. 1 kara 2 krantis 7 tils share in residuary excepting separate account Nos. 1 to 3. All other shares than that specified will be excluded from the sale.	Mahammad Hajarat Ali Biswas and others.	1,306 8 9	..	252 13 7
623	Gopalpur Daribhadrapur, pargana Dhawa.	535 4 6	Whole estate, 16 annas share.	....	Jatindra Nath Mukherjee.	..	230 5 10	
657	Basowan, pargana Kumarprotap.	3,572 8 8	..	3 as. 15 gds. share in separate account No. 4. All other shares than that specified will be excluded from the sale.	Ajibatan Nessa Bibi and others.	837 5 6	..	256 0 0
666	Sanskar Bhadrapur, pargana Dhawa.	7,477 3 11	..	11 annas share of mauzas Karamji, Pachhim Gopalpur, Radhagobindapur, Kantor, Bhabanipur, Kalitha, Math Kalitha Boria, Atgran., Makrampur, Radipur Bhadrapur, Purba Gopalpur, Akalipur, Purba Lakhinarayanpur, Goswainpur, Jestha Bhabanipur, Bara, Rouha, Sarbasidanga, Simlandi, Hajarpur, Bandhkhala, Sitalgram, Raypur, Kalipur, Araji Madhupur, Protappur, Chandpara, Sanskar, Sungai and Gopinathpur in residuary excepting separate account Nos. 1 and 2. All other shares than that specified will be excluded from the sale.	Kumar Debendra Nath Roy.	5,140 8 8	..	2,239 13 8
928	Singram, pargana Nowanagar.	524 14 0	Whole estate, 16 annas share.	....	Mirja Lutfa Ali and others.	..	129 0 0	..
992	Taraf Jagadwispur, pargana Kumarprotap.	1,062 10 4	Do.	....	Mohini Mohan Ghosal.	..	187 9 11	..
999	Birori, pargana Nowanagar.	632 8 11	Do.	....	Nitya Kali Dasya.	..	396 12 10	..
1003	Raghunathpur, pargana Sahajadpur.	717 4 2	Do.	....	Sabaran Nessa Bibi and others.	..	237 13 11	..
1005	Ramrampur, pargana Kumarprotap.	1,099 0 0	Do.	....	Maulvi Muhammad Badarodoza and others.	..	221 1 6	..
1219	Pakurhana, pargana Barbaksing.	1,898 7 5	..	4 as. 16 gds. 2 karas 2 krantis share in separate account No. 1. All other shares than that specified will be excluded from the sale.	Shyam Sundar Mustafi and others.	573 7 11	..	18 6
1221	Taraf Belhatti, pargana Barbaksing.	2,218 0 7	Whole estate, 16 annas share.	....	Dwaraka Nath Telang, and others, general secretary.	..	583 7 11	..

These estates are being advertised for sale for instalments of revenue due on or before the 30th Agrahayan, 1341 B.S., of which the latest date of payment was 12th January 1935.

Suri, the 5th March 1935.

[ILLEGIBLE], *for* Collector.

In the Court of the District Judge, Rangpur.

WAKF CASE No. 1 OF 1934.

Maniruddin Ahmed, son of late Hazi Samiruddin, of Satgara, police-station Kotwali, district Rangpur, Matwalli.

WHEREAS the statement of particulars under section 3 of the Musalman Wakf Act of 1923 has been filed in the above case, it is hereby notified under section 4 of the said Act for information that any person may apply to the Court by a petition in writing, accompanied by the prescribed fee for the issue of an order requiring the Matwalli to furnish further particulars or documents.

Given under my hand and seal of this Court, this 2nd day of March 1935.

P. C. DE, District Judge.

(645—1)

In the High Court of Judicature at Fort William in Bengal, in Insolvency.

NOTICE OF ADJUDICATION ORDER.

No. 26 of 1935.

Re Kenneth Orson Blewitt, also known as Kenneth Blewitt, residing in suite No. 3B of premises No. 3, Hartford Lane, in the town of Calcutta, employed in the firm of Messrs. D. Gestetner (India), Ltd., at No. 17, Park Street, in Calcutta aforesaid, as a "salesman", *ex parte* the debtor in person.

ON the 1st day of March 1935 an order was made by the High Court of Judicature at Fort William in Bengal in its insolvency jurisdiction adjudging the abovenamed as an insolvent.

Note.—All debts due to the estate should be paid to me.

Dated this 4th day of March 1935.

G. M. FALKNER, Official Assignee.

In the Court of the Sub-Judge at Asansol.

Section 19(2) of the Provincial Insolvency Act.

INSOLVENCY CASE No. 56 OF 1934.

NOTICE is hereby given to his creditors that the insolvency petition filed by Mohan Lal Lala has been admitted, and the 22nd March 1935 has been fixed for hearing thereof.

K. BANERJI, Sub-Judge.

Asansol, the 14th February 1935. (531—1)

ORDER OF ADJUDICATION.

Section 27 of the Provincial Insolvency Act, V of 1920.

In the Court of the District Judge at Dacca.

INSOLVENCY APPLICATION No. 18 OF 1934.

Shamlal Kundu, debtor, insolvent.

PURSUANT to a petition, dated the 14th May 1934, filed by Shamlal Kundu, son of late Dina Bandhu Kundu, resident of Abirpara, police-station Serajdikhan, district Dacca, debtor, and on the application of the debtor himself and on reading the aforesaid petition and hearing the debtor and the pleader for the debtor, it is ordered that the debtor be and the said debtor is hereby adjudged insolvent.

It is further ordered that the debtor do apply for his discharge within one year from this date.

Dated this 12th day of February 1935.

E. B. H. BAKER, District Judge.

(521—1)

ORDER OF ADJUDICATION.

Section 27 of the Provincial Insolvency Act, V of 1920.

In the Court of the District Judge at Dacca.

INSOLVENCY APPLICATION No. 19 OF 1934.

Rash Mohan Kundu, debtor, insolvent.

PURSUANT to a petition, dated the 14th May 1934, filed by Rash Mohan Kundu, son of Basinath Kundu, resident of Abirpara, police-station Serajdikhan, district Dacca, debtor, and on the application of the debtor himself and on reading the aforesaid petition and hearing the debtor and the pleader for the debtor, it is ordered that the debtor be and the said debtor is hereby adjudged insolvent.

It is further ordered that the debtor do apply for his discharge within one year from this date.

Dated this 12th day of February 1935.

E. B. H. BAKER, District Judge.

(522—1)

In the Court of the District Judge of Darjeeling.

INSOLVENCY CASE No. 6 OF 1935.

Sonwangdi, petitioner.

SONWANGDI, resident of Kalimpong, Darjeeling police-station, district Darjeeling, has applied to this Court to be adjudged insolvent.

The Court has fixed the 29th day of March 1935 for hearing of the application at Darjeeling.

S. BANERJI, *for* District Judge.

Dinajpur, the 15th February 1935. (514—1)

In the Court of the District Judge of Faridpur.

INSOLVENCY CASE No. 178 OF 1934.

Taju Fakir, son of late Nabu Fakir, of Char Tepakhola, police-station Kotwali, district Faridpur, debtor, petitioner.

NOTICE is hereby given that the abovenamed petitioner has been adjudged insolvent by an order of this Court, dated the 13th February 1935, and directed to apply for final discharge within six months.

K. B. ROY, District Judge.

Faridpur, the 21st February 1935. (580—1)

In the Court of the District Judge of Faridpur.

INSOLVENCY CASES Nos. 43 AND 44 OF 1932.

Naimaddi Haoladar and Kaimaddi Haoladar, sons of late Kalimaddi Haoladar, of Kumarkhali, police-station Bhanga, district Faridpur, insolvents.

NOTICE is hereby given that the order of adjudication of the abovenamed insolvents dated 25th July 1933 has been annulled by this Court dated 15th February 1935.

K. B. ROY, District Judge.

Faridpur, the 5th March 1935.

In the Court of the District Judge of Faridpur.

INSOLVENCY CASES Nos. 47 AND 48 OF 1933.

Fulmamud Mallik and Dinu Mallik, sons of late Natu Mallik, of Majbari, police-station Pangsa, district Faridpur, insolvents.

NOTICE is hereby given that the orders of adjudication of the abovenamed insolvents dated 24th October 1933 has been annulled by this Court dated 23rd February 1935.

K. B. ROY, District Judge.

Faridpur, the 5th March 1935.

In the Court of the District Judge of Faridpur.

INSOLVENCY CASE No. 94 OF 1933.

Easin Khalifa, son of late Kamaraddin Khalifa, of Char Kamalapur, police-station Kotwali, district Faridpur, insolvent.

NOTICE is hereby given that the order of adjudication of the abovenamed insolvent dated 6th December 1933 has been annulled by this Court dated 31st January 1935.

K. B. ROY, District Judge.

Faridpur, the 5th March 1935.

In the Court of the District Judge of Hooghly.

INSOLVENCY PETITION No. 76 OF 1933.

NOTICE is hereby given that (1) Abdul Zabbar, (2) Abdul Latif, (3) Abdul Rahaman, (4) Abdul Karim, sons of late Maniruddin, of Tajpore, thana Chanditala, district Hooghly, were on the 5th January 1935 adjudged insolvents. The 5th April 1935 has been fixed for framing a schedule and creditors are required to prove their claims on that day.

T. BANERJI, *for* District Judge.

Chinsura, the 12th February 1935. (461—1)

In the Court of the District Judge of Hooghly.

INSOLVENCY PETITION No. 57 OF 1934.

NOTICE is hereby given that Jayahir Lal Bhakat, son of late Gajadhar *alias* Manuki Bhakat, of Sheoraphuli, thana Serampore, district Hooghly, was on the 9th January 1935 adjudged an insolvent. The 9th April 1935 has been fixed for framing a schedule and creditors are required to prove their claims on that day.

T. BANERJI, *for* District Judge.

Chinsura, the 11th February 1935. (462—1)

In the Court of the District Judge of Hooghly.

NOTICE is hereby given, under clause (2) of section 12 of the Provincial Insolvency Act, V of 1920, to his creditors that the insolvency petition of Sarat Chandra Bhuia, son of late Raj Chandra Bhuia, of Guarirdanga, Sheorafully, thana Serampore, district Hooghly, has been admitted by this Court as No. 9 of 1935 and that the 30th March 1935 has been fixed for the hearing thereof.

S. SEN, District Judge.

Chinsura, the 2nd March 1935. (650—1)

In the Court of the District Judge of Hooghly.

INSOLVENCY PETITION No. 74 OF 1933.

NOTICE is hereby given that Amar Nath Chatterjee, son of Panchanan Chatterjee, of Bhandarhati, thana Dhaniakhali, district Hooghly, was on the 21st February 1934 adjudged an insolvent. The 30th March 1935 has been fixed for hearing of the application for final discharge.

S. SEN, District Judge.

Chinsura, the 2nd March 1935. (651—1)

In the Court of the Addl. Sub-Judge, Malda.

INSOLVENCY CASE No. 2 OF 1935.

NOTICE is hereby given under the Provincial Insolvency Act, V of 1920, to his creditors that Chandra Mohan Mandal, son of late Bechan Mandal, of Luxmipur, police-station Kaliachak, district Malda, has been admitted by this Court and that 23rd March 1935 has been fixed for hearing thereof.

R. L. CHAKRAVARTY, Addl. Sub-Judge.

Malda, the 19th February 1935. (576—1)

ORDER ANNULLING ADJUDICATION.

Section 35 of the Provincial Insolvency Act, V of 1920.

In the Court of the District Judge at Midnapore.

INSOLVENCY APPLICATION No. 71 OF 1933.

Kalooram Chetandas, a mercantile firm, carrying on business at No. 62, Clive Street, Calcutta, creditor, applicant.

ON the application of Girish Chandra Das, son of late Fakirchand Das, of Kalicharanpur, thana Nandigram, district Midnapore, debtor, and on reading his application and hearing his pleader, it is ordered that the order of adjudication, dated 14th February 1934, against Girish Chandra Das, son of late Fakirchand Das, of Kalicharanpur, thana Nandigram, district Midnapore, be and the same is hereby annulled.

Dated this 16th day of February 1935.

S. K. HALDAR, District Judge

(608—1)

In the Court of the District Judge of Murshidabad.

INSOLVENCY CASE No. 8 OF 1935.

In the matter of Nirmal Chandra Das and Jadunath Das, sons of late Akrur Chandra Das, of Kayadanga, police-station Suti, district Murshidabad, debtors-petitioners.

NOTICE is hereby given to all concerned that the abovenamed debtors have applied to this Court for being adjudicated insolvents and that the 23rd day of March 1935 has been fixed for hearing their application.

G. B. SYNGE, District Judge.

Berhampore, the 26th February 1935. (637—1)

In the Court of the District Judge of Rangpur.

INSOLVENCY CASE No. 1 OF 1935.

ON the application of the debtor Jatindra Nath Karmakar, son of late Baikunta Lal Karmakar, of Nilphamari, police-station Nilphamari, in Rangpur, for being adjudged an insolvent, the 23rd day of March 1935 has been fixed for hearing the aforesaid petition and the examination of the debtor.

P. C. DE, District Judge.

Rangpur, the 22nd February 1935. (624—1)

In the Court of the District Judge of Rangpur.

INSOLVENCY CASE No. 19 OF 1933.

ON the application of the debtor Nesabuddin, son of late Nazi Mamud, of Mandrail, police-station Gangachora, in Rangpur, for being finally discharged, the 23rd day of March 1935 has been fixed for hearing the aforesaid petition and the examination of the debtor.

P. C. DE, District Judge.

Rangpur, the 26th February 1935. (625—1)

ORDER OF ADJUDICATION.

Section 27 of the Provincial Insolvency Act, V of 1920.

In the 4th Court of the Sub-Judge at Alipore.

INSOLVENCY APPLICATION No. 284 OF 1934.

PURSUANT to a petition, dated 6th July 1934, filed by Jagdeo Ganderia of Pathakpara, police-station Behala, and on the application of the debtor himself and on reading his application and hearing his pleader, it is ordered that the debtor be and the said debtor is hereby adjudged insolvent.

It is further ordered that the debtor do apply for his discharge within six months from this date.

Dated this 29th day of January 1935.

J. N. SEN, Sub-Judge.

(356—1)

ORDER OF ADJUDICATION.

Section 27 of the Provincial Insolvency Act, V of 1920.

In the 4th Court of the Sub-Judge at Alipore.

INSOLVENCY APPLICATION No. 343 OF 1934.

PURSUANT to a petition, dated 9th August 1934, filed by Misri Malla *alias* Misri Choudhury of Uranpara, police-station Titagarh, and on the application of the debtor himself and on reading his application and hearing his pleader, it is ordered that the debtor be and the said debtor is hereby adjudged insolvent.

It is further ordered that the debtor do apply for his discharge within six months from this date.

Dated this 29th day of January 1935.

J. N. SEN, Sub-Judge.

(358—1)

ORDER OF ADJUDICATION.

Section 27 of the Provincial Insolvency Act, V of 1920.

In the 4th Court of the Sub-Judge at Alipore.

INSOLVENCY APPLICATION No. 364 OF 1934.

PURSUANT to a petition, dated 24th August 1934, filed by Sarat Chandra Kundu of Rajhat, police-station Bankura, district Bankura, and on the application of the debtor himself and on reading his application and hearing his pleader, it is ordered that the debtor be and the said debtor is hereby adjudged insolvent.

It is further ordered that the debtor do apply for his discharge within six months from this date.

Dated this 29th day of January 1935.

J. N. SEN, Sub-Judge.

(359—1)

ORDER OF ADJUDICATION.

Section 27 of the Provincial Insolvency Act, V of 1920.

In the 4th Court of the Sub-Judge at Alipore.

INSOLVENCY APPLICATION No. 387 OF 1934.

PURSUANT to a petition, dated 5th September 1934, filed by Shaikh Ghashi of Kashaipara, Metiaburz, 24-Parganas, and on the application of the debtor himself and on reading his application and hearing his pleader, it is ordered that the debtor be and the said debtor is hereby adjudged insolvent.

It is further ordered that the debtor do apply for his discharge within six months from this date.

Dated this 24th day of January 1935.

J. N. SEN, Sub-Judge.

(361—1)

ORDER OF ADJUDICATION.

Section 27 of the Provincial Insolvency Act, V of 1920.

In the 4th Court of the Sub-Judge at Alipore.

INSOLVENCY APPLICATION No. 396 OF 1934.

PURSUANT to a petition, dated 8th September 1934, filed by Subodh Chandra Dutta of 12, Hindusthan Road, 24-Parganas, and on the application of the debtor himself and on reading his application and hearing his pleader, it is ordered that the debtor be and the said debtor is hereby adjudged insolvent.

It is further ordered that the debtor do apply for his discharge within six months from this date.

Dated this 29th day of January 1935.

J. N. SEN, Sub-Judge.

(362—1)

ORDER OF ADJUDICATION.

Section 27 of the Provincial Insolvency Act, V of 1920.

In the 4th Court of the Sub-Judge at Alipore.

INSOLVENCY APPLICATION No. 404 OF 1934.

PURSUANT to a petition, dated 11th September 1934, filed by Mohammad Sariff of 3, Gas Street, police-station Belliaghata, and on the application of the debtor himself and on reading his application and hearing his pleader, it is ordered that the debtor be and the said debtor is hereby adjudged insolvent.

It is further ordered that the debtor do apply for his discharge within six months from this date.

Dated this 29th day of January 1935.

J. N. SEN, Sub-Judge.

(363—1)

ORDER OF ADJUDICATION.

Section 27 of the Provincial Insolvency Act, V of 1920.

In the 4th Court of the Sub-Judge at Alipore.

INSOLVENCY APPLICATION No. 407 OF 1934.

PURSUANT to a petition, dated 12th September 1934, filed by Kali Charan Sen of Nawabjang, police-station Nawpara, and on the application of the debtor himself and on reading his application and hearing his pleader, it is ordered that the debtor be and the said debtor is hereby adjudged insolvent.

It is further ordered that the debtor do apply for his discharge within six months from this date.

Dated this 29th day of January 1935.

J. N. SEN, Sub-Judge.

(364—1)

ORDER OF ADJUDICATION.

Section 27 of the Provincial Insolvency Act, V of 1920.

In the 4th Court of the Sub-Judge at Alipore.

INSOLVENCY APPLICATION No. 416 OF 1934.

PURSUANT to a petition, dated 17th September 1934, filed by Golab Kahar of Gouripore, police-station Naihati, and on the application of the debtor himself and on reading his application and hearing his pleader, it is ordered that the debtor be and the said debtor is hereby adjudged insolvent.

It is further ordered that the debtor do apply for his discharge within six months from this date.

Dated this 29th day of January 1935.

J. N. SEN, Sub-Judge.

(365—1)

In the 4th Court of the Sub-Judge of 24-Parganas.

INSOLVENCY CASE No. 521 OF 1934.

Jhagra Ram Mahar of Paharpore Road, police-station Muchikhola, applicant.

To Tarak Nath Agarwalla of 13, Paikpara, Raja Manindra Nath Road, and others, creditors.

ON the 28th day of January 1935 it was ordered that the matter of the petition of the applicant be heard on the 25th day of March 1935, and that the said applicant do attend to be examined by this Court on that date.

J. N. SEN, Sub-Judge.

Alipore, the 29th January 1935. (368—1)

In the 4th Court of the Sub-Judge of 24-Parganas.

INSOLVENCY CASE No. 526 OF 1934.

Sm. Binapani Dassi of 132-3, Russa Road, Kalighat, police-station Tallygunge, applicant.

To Sm. Susila Bala Dassi of 45-14, Harish Chatterjee Street, Kalighat, police-station Bhowanipore, and others, creditors.

ON the 29th day of January 1935 it was ordered that the matter of the petition of the applicant be heard on the 25th day of March 1935, and that the said applicant do attend to be examined by this Court on that date.

J. N. SEN, Sub-Judge.

Alipore, the 30th January 1935. (369—1)

In the 4th Court of the Sub-Judge of 24-Parganas.

INSOLVENCY CASE No. 20 OF 1935.

Annada Prosad Banerjee of 25, Kali Kumar Banerjee Lane, police-station Tala, applicant.

To Ananda Lal Mukherjee of Nilkumari, police-station Tant, Rangpore, and another, creditors.

ON the 29th day of January 1935 it was ordered that the matter of the petition of the applicant be heard on the 25th day of March 1935, and that the said applicant do attend to be examined by this Court on that date.

J. N. SEN, Sub-Judge.

Alipore, the 30th January 1935. (374—1)

In the 4th Court of the Sub-Judge of 24-Parganas.

INSOLVENCY CASE No. 23 OF 1935.

Dwijabar Ruidas of Jhaupore, police-station Jagadal, applicant.

To Bibhuti Bhusan Mitra of Bhatpara, 24-Parganas, and others, creditors.

ON the 25th day of January 1935 it was ordered that the matter of the petition of the applicant be heard on the 25th day of March 1935 and that the said applicant do attend to be examined by this Court on that date.

J. N. SEN, Sub-Judge.

Alipore, the 29th January 1935. (377—1)

In the 4th Court of the Sub-Judge of 24-Parganas.

INSOLVENCY CASE No. 30 OF 1935.

J. H. Lewin of 1, Loco Quarters, Narikeldanga, 24-Parganas, applicant.

To Mahammad Sharif of 162, Belliaghata Road, Calcutta, and others, creditors.

ON the 24th day of January 1935 it was ordered that the matter of the petition of the applicant be heard on the 25th day of March 1935, and that the said applicant do attend to be examined by this Court on that date.

J. N. SEN, Sub-Judge.

Alipore, the 29th January 1935. (379—1)

In the 4th Court of the Sub-Judge of 24-Parganas.

INSOLVENCY CASE No. 34 OF 1935.

Tafiluddin Molla of Ramchandra Khali, police-station Matla, applicant.

To Bibhuti Bhusan Ray and Sudhangshu Bhusan Ray of 43, Lansdowne Road, Bhowanipore, and others, creditors.

ON the 26th day of January 1935 it was ordered that the matter of the petition of the applicant be heard on the 25th day of March 1935, and that the said applicant do attend to be examined by this Court on that date.

J. N. SEN, Sub-Judge.

Alipore, the 29th January 1935. (382—1)

In the 4th Court of the Sub-Judge of 24-Parganas.

INSOLVENCY CASE No. 35 OF 1935.

Abinash Chandra Mondal of Banjanhera, police-station Budge Budge, applicant.

To Achuttananda Samanta of Jaychandipore, police-station Budge Budge, and others, creditors.

ON the 29th day of January 1935 it was ordered that the matter of the petition of the applicant be heard on the 25th day of March 1935, and that the said applicant do attend to be examined by this Court on that date.

J. N. SEN, Sub-Judge.

Alipore, the 30th January 1935. (383—1)

In the 4th Court of the Sub-Judge of 24-Parganas.

INSOLVENCY CASE No. 36 OF 1935.

Kanai Lal Sircar of 21-1, Jugipara Lane, police-station Beliaghata, applicant.

To Dhirendra Nath Bose, Nirendra Kumar Bose, Gunendra Kumar Bose and Anil Kumar Bose of 73, Amherst Row, Calcutta, creditors.

ON the 29th day of January 1935 it was ordered that the matter of the petition of the applicant be heard on the 25th day of March 1935, and that the said applicant do attend to be examined by this Court on that date.

J. N. SEN, Sub-Judge.

Alipore, the 30th January 1935. (384—1)

NOTICE TO CREDITORS OF APPLICATION FOR DISCHARGE.

Section 41(*1*) of the Provincial Insolvency Act, V of 1920.

In the 4th Court of the Sub-Judge at Alipore.

INSOLVENCY CASE No. 314 OF 1933.

Shaik Dil Mohammad of Nichubagan, Metiaburuz, 24-Parganas, applicant.

TAKE notice that the abovenamed insolvent has applied at the Court for his discharge, and that the Court has fixed the 25th day of March 1935, at 11 o'clock, for hearing the application.

Dated this 1st day of February 1935.

J. N. SEN, Sub-Judge.

(488—1)

ORDER OF ADJUDICATION.

Section 27 of the Provincial Insolvency Act, V of 1920.

In the 4th Court of the Sub-Judge at Alipore.

INSOLVENCY APPLICATION No. 322 OF 1934.

PURSUANT to a petition, dated the 30th July 1934, filed by S. M. A. Windle of Circular Garden Reach Road, Kidderpore, 24-Parganas, debtor, and on the application of the debtor himself and on reading his application and hearing his pleader, it is ordered that the debtor be and the said debtor is hereby adjudged insolvent.

It is further ordered that the debtor do apply for his discharge within six months from this date.

Dated this 31st day of January 1935.

J. N. SEN, Sub-Judge.

(489—1)

In the 4th Court of the Sub-Judge of 24-Parganas.

INSOLVENCY CASE No. 516 OF 1934.

Ambica Charan Halder of Karamoneeraj, Magrahat, 24-Parganas, applicant.

To Mahadeo Chandra Nath of Baruipore, 24-Parganas, and others, creditors.

ON the 26th day of January 1935 it was ordered that the matter of the petition of the applicant be heard on the 25th day of March 1935 and that the said applicant do attend to be examined by this Court on that date.

J. N. SEN, Sub-Judge.

Alipore, the 31st January 1935. (490—1)

In the 4th Court of the Sub-Judge of 24-Parganas.

INSOLVENCY CASE No. 524 OF 1934.

Beloy Kumar Mukherjee, of Madhyam Gram, police-station Baraset, 24-Parganas, applicant.

To Chandi Ch. Nayak of 124-1, Bowbazar Street, Calcutta, and others, creditors.

ON the 26th day of January 1935 it was ordered that the matter of the petition of the applicant be heard on the 25th day of March 1935 and that the said applicant do attend to be examined by this Court on that date.

J. N. SEN, Sub-Judge.

Alipore, the 6th February 1935. (491—1)

In the 4th Court of the Sub-Judge of 24-Parganas.

INSOLVENCY CASE No. 530 OF 1934.

Shamlal Kahar of 79, Russa Road, Bhowanipore, 24-Parganas, applicant.

To Sudhanya Pande of 6, Rupnarayan Nandan Lane, Bhowanipore, Calcutta, and others, creditors.

ON the 30th day of January 1935 it was ordered that the matter of the petition of the applicant be heard on the 25th day of March 1935 and that the said applicant do attend to be examined by this Court on that date.

J. N. SEN, Sub-Judge.

Alipore, the 6th February 1935. (492—1)

In the 4th Court of the Sub-Judge of 24-Parganas.

INSOLVENCY CASE No. 532 OF 1934.

Khagendranath Dey of 68-2A, Garpar Road, Beliaghata, 24-Parganas, applicant.

To Tincowri Pathak of 29, Karbala Tank Lane, Calcutta, and others, creditors.

ON the 31st day of January 1935 it was ordered that the matter of the petition of the applicant be heard on the 2nd day of April 1935 and that the said applicant do attend to be examined by this Court on that date.

J. N. SEN, Sub-Judge.

Alipore, the 1st February 1935. (493—1)

In the 4th Court of the Sub-Judge of 24-Parganas.

INSOLVENCY CASE No. 3 OF 1935.

Haran Chandra Pal of Bundel Picknick Garden Road, 24-Parganas, applicant.

To Sarat Chandra Pal of Bundel Picknick Garden Road, 24-Parganas, and others, creditors.

ON the 26th day of January 1935 it was ordered that the matter of the petition of the applicant be heard on the 25th day of March 1935 and that the said applicant do attend to be examined by this Court on that date.

J. N. SEN, Sub-Judge.

Alipore, the 1st February 1935. (495—1)

In the 4th Court of the Sub-Judge of 24-Parganas.

INSOLVENCY CASE No. 8 OF 1935.

Mahesh Das Khetri of 22, Monoharpukur Road, police-station Tollygunge, 24-Parganas, applicant.

To Firm Roy & Khan of 4-1, Free School Street, Calcutta, and others, creditors.

ON the 30th day of January 1935 it was ordered that the matter of the petition of the applicant be heard on the 2nd day of April 1935 and that the said applicant do attend to be examined by this Court on that date.

J. N. SEN, Sub-Judge.

Alipore, the 6th February 1935. (496—1)

In the 4th Court of the Sub-Judge of 24-Parganas.

INSOLVENCY CASE No. 27 OF 1935.

W. C. Dowson of 134, Loco Quarters, Chitpore, 24-Parganas, applicant.

To Mahadeolal & Bros. of 1, Tekiapara Road, Howrah, and others, creditors.

ON the 24th day of January 1935 it was ordered that the matter of the petition of the applicant be heard on the 25th day of March 1935 and that the said applicant do attend to be examined by this Court on that date.

J. N. SEN, Sub-Judge.

Alipore, the 5th February 1935. (497—1)

In the 4th Court of the Sub-Judge of 24-Parganas.

INSOLVENCY CASE No. 28 OF 1935.

Basudeb Maity of 137-4, Narikeldanga Main Road, Belliaghata, 24-Parganas, applicant.

To Sarat Chandra Banerjee of 34, Ramanath Kabiraj Lane, Calcutta, and others, creditors.

ON the 31st day of January 1935 it was ordered that the matter of the petition of the applicant be heard on the 2nd day of April 1935 and that the said applicant do attend to be examined by this Court on that date.

J. N. SEN, Sub-Judge.

Alipore, the 1st February 1935. (498—1)

In the 4th Court of the Sub-Judge of 24-Parganas.

INSOLVENCY CASE No. 39 OF 1935.

Bhuban Chandra Biswas of Sri Khanda, police-station Sonarpur, 24-Parganas, applicant.

To Anukul Chandra Das Naskar of Tentulberia, 24-Parganas, and others, creditors.

ON the 5th day of February 1935 it was ordered that the matter of the petition of the applicant be heard on the 2nd day of April 1935 and that the said applicant do attend to be examined by this Court on that date.

J. N. SEN, Sub-Judge.

Alipore, the 12th February 1935. (499—1)

In the 4th Court of the Sub-Judge of 24-Parganas.

INSOLVENCY CASE No. 41 OF 1935.

Abdul Karim of 50-7, Narikeldanga North Road, Beliaghata, 24-Parganas, applicant.

To Rahatunessa Biby and Jebunessa Bibi of 14, Hati Bagan Road, Calcutta, and others, creditors.

ON the 2nd day of February 1935 it was ordered that the matter of the petition of the applicant be heard on the 2nd day of April 1935 and that the said applicant do attend to be examined by this Court on that date.

J. N. SEN, Sub-Judge.

Alipore, the 6th February 1935. (500—1)

In the 4th Court of the Sub-Judge of 24-Parganas.

INSOLVENCY CASE No. 42 OF 1935.

Muralidhar Marwari and Bansidhar Marwari of Jaggatdal, 24-Parganas, applicant.

To Gulzarilall of 17-2, Free Church Street, Calcutta, and others, creditors.

ON the 4th day of February 1935 it was ordered that the matter of the petition of the applicant be heard on the 2nd day of April 1935 and that the said applicant do attend to be examined by this Court on that date.

J. N. SEN, Sub-Judge.

Alipore, the 12th February 1935. (501—1)

In the 4th Court of the Sub-Judge of 24-Parganas.

INSOLVENCY CASE No. 43 OF 1935.

Sailendra Nath Roy Chaudhury of 23B, Sadananda Road, Kalighat, 24-Parganas, applicant.

To Bindu Madhab De of 11, Kripanath Lane, Calcutta, and others, creditors.

ON the 4th day of February 1935 it was ordered that the matter of the petition of the applicant be heard on the 2nd day of April 1935 and that the said applicant do attend to be examined by this Court on that date.

J. N. SEN, Sub-Judge.

Alipore, the 12th February 1935. (502—1)

In the 4th Court of the Sub-Judge of 24-Parganas.

INSOLVENCY CASE No. 44 OF 1935.

Jagannath Das of 6-1, Gopalnagar Road, Chetla, Alipore, 24-Parganas, applicant.

To Tara Chand Ghanashyam Das of Narkeldanga, Beliaghata, and others, creditors.

ON the 4th day of February 1935 it was ordered that the matter of the petition of the applicant be heard on the 2nd day of April 1935 and that the said applicant do attend to be examined by this Court on that date.

J. N. SEN, Sub-Judge.

Alipore, the 12th February 1935. (503—1)

In the 4th Court of the Sub-Judge of 24-Parganas.

INSOLVENCY CASE No. 45 OF 1935.

A. S. Harry of 11, Cantopher Lane, police-station Beniapukur, 24-Parganas, applicant.

To Barati Mistri of 8, Mistripara Lane, police-station Beniapukur, 24-Parganas, and others, creditors.

ON the 5th day of February 1935 it was ordered that the matter of the petition of the applicant be heard on the 2nd day of April 1935 and that the said applicant do attend to be examined by this Court on that date.

J. N. SEN, Sub-Judge.

Alipore, the 6th February 1935. (504—1)

In the 4th Court of the Sub-Judge of 24-Parganas.

INSOLVENCY CASE No. 46 OF 1935.

Atul Das of 1-25, Talpukur Road, Beliaghata, 24-Parganas, applicant.

To Fakir Chandra Das of 1-33, Talpukur Road, Beliaghata, Calcutta, and others, creditors.

ON the 5th day of February 1935 it was ordered that the matter of the petition of the applicant be heard on the 2nd day of April 1935 and that the said applicant do attend to be examined by this Court on that date.

J. N. SEN, Sub-Judge.

Alipore, the 12th February 1935. (505—1)

In the 4th Court of the Sub-Judge of 24-Parganas.

INSOLVENCY CASE No. 54 OF 1935.

Jotindra Mohan Daw of 10, Simlaipara Bye Lane, police-station Chitpore, 24-Parganas, applicant.

To Krishna Kamal Shome of 32B, Khelat Babu Lane, Calcutta, and others, creditors.

ON the 12th day of February 1935 it was ordered that the matter of the petition of the applicant be heard on the 2nd day of April 1935 and that the said applicant do attend to be examined by this Court on that date.

J. N. SEN, Sub-Judge.

Alipore, the 14th February 1935. (506—1)

NOTICE TO CREDITORS OF APPLICATION FOR DISCHARGE.

Section 41(1) of the Provincial Insolvency Act, V of 1920.

In the Court of the District Judge at Alipore.

INSOLVENCY CASE No. 24 OF 1934.

Bhushan Chandra Manna of 54-1, Cossipore Road, 24-Parganas, applicant.

TAKE notice that the abovenamed insolvent has applied at the Court for his discharge, and that the Court has fixed the 25th day of March 1935, at 11 o'clock, for hearing the application.

Dated this 25th day of February 1935.

T. H. ELLIS, District Judge.

(633—1)

In the Court of the District Judge of 24-Parganas.

INSOLVENCY CASE No. 8 OF 1935.

Rameswor Chaudhury of Bijpore, Kanchrapara, 24-Parganas, applicant.

To Salee Md. Allauddin, c-o. Mr. J. K. Sarkar, Solicitor, 4, Hastings Street, Calcutta, and others, creditors.

ON the 26th day of February 1935 it was ordered that the matter of the petition of the applicant be heard on the 25th day of March 1935, and that the said applicant do attend to be examined by this Court on that date.

T. H. ELLIS, District Judge.

Alipore, the 28th February 1935. (644—1)

MAULVI A. NURAL HAQUE intends to be admitted as an Advocate of the High Court.

(509—4)

KEDARMULL BRAHMIN intends to be admitted as an Advocate of the High Court.

(438—4)

TARACHAND SARAF intends to be admitted as an Advocate of the High Court.

(439—4)

MR. GIRIJA KUMAR DAWN intends to be enrolled as an Advocate of the Calcutta High Court. (405—4)

MR. MANORANJAN SEN, M.Sc., B.L., intends to be enrolled as an Advocate of the High Court, Calcutta.

(428—4)

MR. BHUPENDRA NATH DAS GUPTA intends to be enrolled as an Advocate.

(450—4)

MR. PRITIBHUSHAN BARMAN, B.L., desires to be enrolled as an Advocate of the Calcutta High Court.

(451—4)

MR. KALIDAS DE CHOUDHURI, M.A., B.L., intends to be enrolled as an Advocate, High Court.

(539—4)

MR. A. B. M. FAZLE RABBI intends to be enrolled as an Advocate, Calcutta High Court.

(540—4)

MR. ABHAYA PADA CHAKRAVARTI, M.A., B.L., intends to be enrolled as an Advocate, High Court.

(507—4)

MR. JITENDRA NATH CHATTERJEE, M.A., B.L., intends to be enrolled as an Advocate of the High Court, Calcutta.

(538—4)

MR. PRABODH CHANDRA MAITRA, LL. B., intends to be enrolled as an Advocate, Calcutta High Court

(562—4)

ASHRAFUDDIN CHAUDHURY, LL.B., intends to be enrolled as an Advocate of the High Court, Calcutta.

(571—4)

MR. DAYAMAY MUKHERJI, M.A., B.L., intends to be enrolled as an Advocate of the High Court, Calcutta.

(627—4)

RAI SOURINDRA NATH CHOWDHURY, B.L., intends to practise as an Advocate, Calcutta High Court.

(652—4)

MR. RADHAKANTA GUPTA, M.Sc., B.L., intends to be enrolled as an Advocate of Calcutta High Court.

(663—4)

MR. KRISHNA NATH BASU, B.L., intends to be enrolled as an Advocate of the Calcutta High Court.

(680—4)

MR. KULADHAR CHALIHA desires to be enrolled as an Advocate of the Calcutta High Court.

(654—4)

WANTED a Muhammadan Vernacular Teacher for the Chittagong Government Moslem High School, in the scale of Rs. 50—4-2—90—5-2—100.

Preference will be given to a Graduate with experience in teaching.

The application containing the following information should be submitted to this office on or before the 20th March 1935 :—

1. Name of father.
2. Native place—
   (*a*) Village.
   (*b*) Post Office.
   (*c*) Thana.
   (*d*) District.
3. Age on 1st March 1935 (calculated according to the Matriculation Certificate).
4. Teaching experience.

M. A. JAAFAR,

Inspector of Schools, Chittagong Division.

WANTED a Professor of English for the Bethune College, Calcutta, from July 1935. The post is in the Women's Branch of the Bengal Educational Service, the pay of which is Rs. 150—30/2—240—20/2—420. The person appointed will be on probation for two years.

2. Candidates for direct appointment must be British subjects and not more than 45 years of age.

They must have a first or second class Master's degree in English of an Indian University, or a good Honours degree in that subject of a European University, and must produce evidence of satisfactory teaching experience.

3. Women officers in the Subordinate Educational Service having the requisite qualifications are permitted to apply for the post.

4. Canvassing of any description will render a candidate liable to disqualification.

5. Applications, together with documentary evidence of the qualifications possessed, and of age, should be submitted, in duplicate, to the Principal, Bethune College, Calcutta, on or before 31st March 1935.

---

1. WANTED a Professor of Geology at Presidency College, Calcutta.

The post is in the Bengal Educational Service, Grade 1, the pay of which is Rs. 300—50/2—700—75/2—1,000, with efficiency bars after the 14th and 19th stages, and the initial pay of the person appointed will, if he holds no substantive appointment in Government service, vary from Rs. 300 to Rs. 550 per month, according to age.

2. Candidates for direct recruitment should be British subjects and between the ages of 25 and 35.

They must possess the highest academical qualifications and produce evidence of specialisation in some branch of Geology, of capacity for original research, and of satisfactory teaching experience, preferably in classes of University standing.

3. Officers in the Bengal Educational Service are permitted to apply for the post.

4. Canvassing of any description will render a candidate liable to disqualification.

5. Applications supported by documentary evidence of age and qualifications, and by testimonials as to character, should be submitted in triplicate, to the Principal, Presidency College, on or before 31st March 1935.

WANTED a lower division clerk in the scale of Rs. 35—35—40—4/2—68—3/2—80 for the Mymensingh Collectorate. The applicant should possess the following qualifications :—

(*a*) He must be a graduate of a recognised University.

(*b*) He must not be over 25 years of age on 1st March 1935.

(*c*) He must be a good steno-typist.

Applications, with University certificates and certificates about stenography and typing in original, will be received by the undersigned up to 18th March 1935.

The selected candidates will have to sit for a test in stenography and typing. None need apply who is not a good steno-typist.

Canvassing in any form will be considered a disqualification.

T. M. DOW, District Officer.

Mymensingh, the 2nd March 1935.

WANTED an Engine Driver for the Dacca Agricultural Farm on a fixed pay of Rs. 60 per month. The post is an inferior one.

He must have at least five years' training as a fitter in a recognised workshop and also five years' experience in the driving of and repairs to industrial types of internal combustion engines, Diesel, Semi-Diesel Kerosene and Petrol.

Applications will be received by the undersigned up to 1st April 1935.

J. K. BISWAS, Deputy Director of Agriculture, Eastern Circle.

NOTICE is hereby given that all exhibits filed in cases disposed of in this Court during the year 1932 will be destroyed if not taken back before 31st March 1935 by parties who filed them.

N. N. GUPTA, Municipal Magistrate, Calcutta.

Town Hall, Calcutta, the 9th January 1935.

NOTICE is hereby given that all exhibits filed in cases disposed of in this Court during the year 1932 will be destroyed if not taken back before 31st March 1935 by the parties who filed them.

A. MAJID, Municipal Magistrate, Calcutta.

Town Hall, Calcutta, the 9th January 1935.

THE Bengal and Madras Service Family Pension Fund which is provisionally managed and assisted by Government has for its object the provision of monthly pensions for the maintenance of the widows and children of subscribers and is open, with certain exceptions, to all active and pensioned members of the Uncovenanted service of Government (except those serving under the Government of Bombay), and to Local Fund servants earning pensions from Government. Some of the special features of the fund are (1) that widowed daughters incapable of re-marriage or children labouring under such mental or bodily infirmities as incapacitate them from earning their livelihood or preclude the possibility of marriage (in case of a daughter) are admitted to its benefits; and (2) that subscribers to the Widows and Daughters' branches are entitled to a refund of 30 per cent. of the premia paid, should the nominee predecease them after five years of admission. The second quinquennial valuation of the Fund has been completed by the Actuary to the Government of India, and his report discloses very favourable results. For forms of application and rules of the Fund apply to the Accountant-General, Bengal, Imperial Secretariat Buildings, Calcutta.

Road Cess Notification.

THE district board of Murshidabad at a special meeting held on the 16th February 1935 resolved to levy road cess for the year 1935-36 at the maximum rate of six pies in the rupee on the annual value of lands, etc.

S. N. SINHA, Chairman, District Board.

Berhampore, the 24th February 1935. (630—2)

Road Cess Notification.

THE district board of Noakhali at their special meeting held on the 19th January 1935 resolved to levy road cess in the Noakhali district during the year 1935-36 at the maximum rate of six pies in the rupee on the annual value of land, etc.

A. GOFRAN, Chairman, District Board.

Noakhali, the 28th February 1935. (638—2)

Road Cess Notification.

THE district board of Jessore at their special meeting held on the 28th February 1935, resolved, under section 46 of the Bengal Local Self-Government Act, to levy road cess during the next year 1935-36, at the maximum rate of six pies in the rupee on the annual value of all lands, etc., in the district of Jessore.

S. N. ALI, Chairman, District Board.

Jessore, the 28th February 1935. (642—2)

Road Cess Notification.

THE district board of Bankura, at their special meeting held on the 2nd March 1935, resolved, under section 46 of the Bengal Local Self-Government Act, to levy road cess during the year 1935-36 at the rate of five pies in the rupee on the annual value of all lands, etc., in the district of Bankura, subject to the sanction of Government.

T. C. ROY, Chairman, District Board.

Bankura, the 8th March 1935. (688—1)

Destroyed.

THE Government Promissory Note No. 105642 of 3 per cent. loan of 1896-97 for Rs. 1,000, originally standing in the name of Kedar Nath Mukerjee, the proprietor, by whom it was never endorsed to any other person having been destroyed, notice is hereby given that payment of the above note and the interest thereupon have been stopped at the Public Debt Office, Imperial Bank of India, Calcutta, and that application is about to be made for the issue of a duplicate in favour of the proprietor. The public are cautioned against purchasing or otherwise dealing with the above-mentioned security.

Name of the advertiser—Probodh Chandra Ganguli, Pleader, Alipore, for Kedar Nath Mukerji of Ghatakpara, Ranaghat.

(452—3)

Currency Note.

PORTION of the following Currency Note of the Calcutta Circle is stated to have been destroyed, and payment of its value has been claimed by the person whose name is placed against the number. Any other person claiming a right to it is warned to communicate at once with the undersigned :—

Register No.	Number of note.	Value.	Name of claimant.
		Rs.	
WD10—34/35	S/78, 030434	100	Fatik Karikar, village and post-office Kashimari, district Khulna.

K. K. CHETTUR, Currency Officer.

Currency Office, Calcutta, the 20th February 1935.

Currency Notes.

PORTIONS of the following Currency Notes of the Calcutta Circle are stated to have been destroyed, and payment of their value has been claimed by the person whose name is placed against the numbers. Any other person claiming a right to them is warned to communicate at once with the undersigned :—

Register No.	Number of notes.	Value.	Name of claimant.
		Rs.	
WD11—34/35	RD/71, 59511,	100	Gouri, son of Nekko Mahajan, village Uchapind, post-office Billawar, tahsil Basohli, district Kathua, Jammu State.
	RE/67, 37546.	100	

K. K. CHETTUR, Currency Officer.

Currency Office, Calcutta, the 20th February 1935.

Currency Note.

PORTION of the following Currency Note of the Calcutta Circle is stated to have been destroyed, and payment of its value has been claimed by the person whose name is placed against the number. Any other person claiming a right to it is warned to communicate at once with the undersigned :—

Register No.	Number of Note.	Value. Rs.	Name of claimant.
WD 12 of 34-35	RD/71, 53991	100	Bhola Nath Kasera, son of Suraj Prasad, Mohalla Harha, House No. C.K. 48/187, Benares City.

K. K. CHETTUR, Currency Officer.

Currency Office, Calcutta, the 4th March 1935.

Currency Note.

PORTION of the following Currency note of the Calcutta Circle is stated to have been destroyed, and payment of its value has been claimed by the person whose name is placed against the number. Any other person claiming a right to it is warned to communicate at once with the undersigned :—

Register No.	Number of Note.	Value. Rs.	Name of claimant.
WD 13 of 34-35	S/78, 670310	100	Ram Chandra Sao, Ramji chak, p.o. Digha, district Patna.

K. K. CHETTUR, Currency Officer.

Currency Office, Calcutta, the 4th March 1935.

Lost or Destroyed.

A RECEIPT numbered 3741, dated 5th February 1935, and granted by the Public Debt Office, Imperial Bank of India, on submission of the undermentioned Government Promissory Notes. Notice of loss has been given to the Public Debt Office, Imperial Bank of India, and the undersigned is about to apply for surrender of the securities :—

G. P. Note No.	Loan.	Amount. Rs.	Holder's name.
200928	3½ per cent., 1842-43.	600	Sudhamoyee Debi.
200957	3½ per cent., 1842-43.	1,000	Ditto.
198964	3½ per cent., 1842-43.	3,000	Ditto.
031770	3½ per cent., 1879.	500	Ditto.

Name of the proprietress—Sudhamoyee Debi.

Residence - 29, Fakir Chakravarty Lane, Calcutta.

(655—1)

Stolen.

THE Government Promissory Note No. 252585 of the 3½ per cent. loan of 1854-55 for Rs. 1,000, originally standing in the name of Baidyanath Ghosh and Bhupendra Nath Ghosh, minors, through their guardian Saraswati Bala Ghosh, the proprietors, by whom it was never endorsed to any other person, having been stolen, notice is hereby given that payment of the above note and the interest thereupon have been stopped at the Public Debt Office, Imperial Bank of India, Calcutta, and that application is about to be made for the issue of duplicate in favour of the proprietors. The public are cautioned against purchasing or otherwise dealing with the above-mentioned security.

SARASWATI BALA GHOSH, post office Basirhat, village Basirhat, district 24-Parganas.

(222—3)

Lost, Stolen or Destroyed.

(As the case may be.)

THE Government Promissory Notes Nos. 254712, 254713 and 251467 of the 3½ per cent. loan of 1865 for Rs. 1,000, Rs. 1,000 and Rs. 100, respectively, originally standing in the name of the Bank of Bengal and last endorsed to Rakhal Das Bannerjee (since deceased), the proprietor, by whom they were never endorsed to any other person, having been lost, stolen or destroyed, notice is hereby given that payment of the above notes and the interest thereupon have been stopped at the Public Debt Office, Imperial Bank of India, Calcutta, and that application is about to be made for the issue of duplicates in favour of Sibatara Bannerji. The public are cautioned against purchasing or otherwise dealing with the above-mentioned securities.

Signature of the advertiser—Sibatara Bannerji.

Residence—1-1C, Puddapukur Square, Kidderpur, Calcutta. (672—3)

Lost, Stolen or Destroyed.

THE Government Promissory Note No. G025969 of the 6 per cent. loan of 1933-36 for Rs. 1,000, originally standing in the name of the Imperial Bank of India and last endorsed to Biman Chandra Bose, the proprietor, by whom it was never endorsed to any other person, having been lost, stolen or destroyed, notice is hereby given that payment of the above note and the interest thereupon have been stopped at the Public Debt Office, Imperial Bank of India, Calcutta, and that application is about to be made for the issue of duplicate in favour of the proprietor. The public are cautioned against purchasing or otherwise dealing with the above-mentioned security.

Name of the advertiser—Biman Chandra Bose.

Residence—11B, Scott Lane, Calcutta.

(628 -3)

In the matter of the Indian Companies Acts, 1913-1920,

and

In the matter of H. L. Rochat & Co. (Calcutta), Limited (in voluntary liquidation).

NOTICE is hereby given that at an extraordinary general meeting of the members of the abovenamed Company duly convened and held at 54, Ezra Street, Calcutta, on Wednesday, the 20th February 1935, the following resolution was duly passed as an extraordinary resolution by reason of the fact that the Company is unable to continue its business by reason of its liabilities:—

"That the Company be wound up voluntarily and that Mr. Frederik Graham Roberts and Mr. John Grant of the firm of Graham Roberts & Co., Chartered Accountants, 5, Fairlie Place, Calcutta, be appointed liquidators with joint and several powers."

H. L. ROCHAT, Chairman.

Calcutta, the 23rd February 1935. (614—1)

In the matter of the Indian Companies Acts, 1913-1920,

and

In the matter of H. L. Rochat & Co. (Calcutta), Limited (in voluntary liquidation).

NOTICE is hereby given pursuant to section 209 of the Indian Companies Act, 1913, that a meeting of the creditors of the abovenamed Company will be held at 5, Fairlie Place, Calcutta, on the 18th day of March 1935, at 12 o'clock noon.

F. GRAHAM ROBERTS,
JOHN GRANT,

Liquidators.

5, Fairlie Place, Calcutta, 23rd February 1935. (615—1)

In the matter of the Indian Companies Act, 1913, and

In the matter of Calcutta Hotel, Limited (in liquidation).

NOTICE is hereby given that pursuant to section 209 of the Indian Companies Act, a meeting of the creditors of the abovenamed Company will be held on 22nd March 1935, at 2 p.m. in the afternoon, at 124/1, Bowbazar Street, Calcutta.

B. N. MUKHERJEE, B.Com., C.D.A., R.A.,
Liquidator.

64, Sitaram Ghosh Street, Calcutta, 28th February 1935.

(664—1)

In the matter of the Indian Companies Act, 1913, and

In the matter of Calcutta Hotel, Limited (in liquidation).

NOTICE is hereby given that at an extraordinary general meeting of the members of the abovenamed Company duly convened and held at 124/1, Bowbazar Street, Calcutta, on Monday, the 25th February 1935, the following resolution was duly passed as an extraordinary resolution : —

That it has been proved to the entire satisfaction of the meeting that the Company cannot, by reason of its liabilities, continue its business and that it is advisable to wind up voluntarily and that Mr. B. N. Mukherjee, Registered Accountant, be and he is hereby appointed liquidator for the purposes of such winding up.

N. N. BOSE, Chairman.

(665—1)

In the matter of the Indian Companies Act, 1913, and

In the matter of the Indian Kinema Arts, Limited (in liquidation).

NOTICE is hereby given that pursuant to the provisions of section 209 of the Indian Companies Act, 1913, a general meeting of the creditors of the abovenamed Company will be held at 30, Grosvenor House, 21, Old Court House Street, Calcutta, on Saturday, the 23rd March 1935, at 3-30 p.m.

B. GUHA.
A. K. CHATTERJEE,
Liquidators.

Calcutta, the 5th March 1935. (668—1)

In the matter of the Indian Companies Act, VII of 1913, and

In the matter of the Indian Kinema Arts, Limited (in liquidation).

AT an extraordinary general meeting of the members of the abovenamed Company duly convened and held at 17, Mangoe Lane, Calcutta, on the 28th day of February 1935, the following extraordinary resolution was duly passed :—

"That it has been proved to the entire satisfaction of this meeting that the Company cannot, by reason of its liabilities, continue its business and that it is advisable to wind it up voluntarily, and that it be so wound up,"

and at the same meeting Dr. A. K. Chatterjee, M. B., of 10-1, Bedford Lane, and Mr. B. Guha, G. D. A., R. A., of 30, Grosvenor House, Calcutta, were appointed joint liquidators for the purpose of such winding up.

Dated this 5th day of March 1935.

S. N. BANERJEE, Chairman.

(669—1)

In the matter of the Indian Companies Act, 1913, and

In the matter of the Comilla Insurance Company, Comilla (in voluntary liquidation).

NOTICE is hereby given, pursuant to section 209 (*i*) of the Indian Companies Act, 1913, that a meeting of the creditors of the Company will be held on the 31st of March 1935, at 4 p. m., at its registered office at Comilla.

S. N. DAS GUPTA, Liquidator.

Comilla, the 7th March 1935. (689—1)

In the matter of the Provident Insurance Societies Act, V of 1912, and

In the matter of the Dacca Mutual Insurance Society (in liquidation).

NOTICE is hereby given that a meeting of the creditors of the abovenamed Society will be held at 7, Rankin Street, Wari, Dacca, at 3 p.m., on Monday, the 18th March 1935, where the liquidator will explain to the creditors the financial condition of the Society and ascertain from each creditor how much is due to him from the Society. All creditors are requested to attend.

A. C. ROY, Liquidator,
appointed under section 19 of the above Act.

Dacca, the 6th March 1935. (699—1)

In the matter of the Indian Companies Act, 1913 (VI of 1913), and

In the matter of Amrit Insurance Company, Limited.

NOTICE is hereby given that the name of Amrit Insurance Company, Limited, has, this day in pursuance of section 247 of the Act, been struck off the register and that the Company is dissolved.

N. K. MAJUMDER, Registrar,
Joint Stock Companies.

Calcutta, the 5th March 1935.

In the matter of the Indian Companies Act, 1913 (VII of 1913), and

In the matter of Indian Minerals and Industries, Limited.

NOTICE is hereby given that the name of Indian Minerals and Industries, Limited, has, this day in pursuance of section 247 of the Act, been struck off the register and that the Company is dissolved.

N. K. MAJUMDER, Registrar,
Joint Stock Companies.

Calcutta, the 5th March 1935.

In the matter of the Indian Companies Act, 1913 (VII of 1913), and

In the matter of Eastern Bengal Ice Factories, Limited.

NOTICE is hereby given that the name of Eastern Bengal Ice Factories, Limited, has, this day in pursuance of section 247 of the Act, been struck off the register and that the Company is dissolved.

N. K. MAJUMDER, Registrar,
Joint Stock Companies.

Calcutta, the 5th March 1935.

In the matter of the Indian Companies Act, 1913 (VII of 1913), and

In the matter of Sen Brothers, Limited.

NOTICE is hereby given that, on the expiration of three months from date, the name of Sen Brothers, Limited, will, unless cause is shown to the contrary, be struck off the register, and the Company will be dissolved.

N. K. MAJUMDER, Registrar of Companies,
under Act VII of 1913.

Calcutta, the 5th March 1935.

In the matter of the Indian Companies Act, 1913 (VII of 1913), and
In the matter of W. C. Hunneman and Company, Limited.

NOTICE is hereby given that, on the expiration of three months from date, the name of W. C. Hunneman and Company, Limited, will, unless cause is shown to the contrary, be struck off the register, and the Company will be dissolved.

N. K. MAJUMDER, Registrar of Companies,
under Act VII of 1913.

Calcutta, the 5th March 1935.

In the matter of the Indian Companies Act, 1913 (VII of 1913), and
In the matter of Tori, Limited.

NOTICE is hereby given that the name of Tori, Limited, has, this day in pursuance of section 247 of the Act, been struck off the register and that the Company is dissolved.

N. K. MAJUMDER, Registrar,
Joint Stock Companies.

Calcutta, the 5th March 1935.

In the matter of the Indian Companies Act, 1913 (VII of 1913), and
In the matter of Indo Union, Limited.

NOTICE is hereby given that, on the expiration of three months from date, the name of Indo Union, Limited, will, unless cause is shown to the contrary, be struck off the register, and the Company will be dissolved.

N. K. MAJUMDER, Registrar of Companies,
under Act VII of 1913.

Calcutta, the 5th March 1935.

In the Court of the Third Officer, Deoghar, Santal Parganas.

RENT EXECUTION CASE No. 870 OF 1934.

To Khitish Chandra Banerjee.

TAKE notice that the receiver of Rohini Estate has obtained a decree against you in Rent Suit No. 104 of 1931 for Rs. 94-14-3 which you have not paid. Now the decree amounts to Rs. 100-15-3 with cost of execution. If the amount be not paid, you are directed to appear on 20th March 1935 before this Court and to show cause against execution.

RAFIQUAL ALAM, Sub-Deputy Collector.

Deoghar, the 6th/9th January 1935. (127—1)

In the Court of the Third Officer, Deoghar, Santal Parganas.

RENT EXECUTION CASE No. 876 OF 1934.

To Suprova Das.

TAKE notice that the receiver of Rohini Estate has obtained a decree against you in Rent Suit No. 180 of 1931 for Rs. 94-14-3 which you have not paid. Now the decree amounts to Rs. 100-3 with cost of execution. If the amount be not paid, you are directed to appear on 20th March 1935 before this Court and to show cause against execution.

RAFIQUAL ALAM, Sub-Deputy Collector.

Deoghar, the 6th/9th January 1935. (128—1)

In the Court of the Third Officer, Deoghar, Santal Parganas.

RENT EXECUTION CASE No. 871 OF 1934.

To Madhab Chandra Bhowmic.

TAKE notice that the receiver of Rohini Estate has obtained a decree against you in Rent Suit No. 151 of 1931 for Rs. 71-2-3 which you have not paid. Now the decree amounts to Rs. 82-15 with cost of execution. If the amount be not paid, you are ordered to appear on 20th March 1935 before this Court and to show cause against execution.

RAFIQUAL ALAM, Sub-Deputy Collector.

Deoghar, the 6th/9th January 1935. (129—1)

Imperial Library.

(Secretariat Buildings, 6, Esplanade East, Calcutta.)
Open on—

Week days and Saturdays from 10 a.m. to 7 p.m.
Sundays and Gazetted holidays from 2 p.m. to 5 p.m.

THE Imperial Library is also a Lending Library. It is free to all except children. There is no subscription to pay.

K. M. ASADULLAH, Librarian.

CINCHONA FACTORY PRODUCTS.

By order of the Government of Bengal Cinchona Factory Products as manufactured and packed at the Cinchona Factory, Mungpoo, Darjeeling district, will be sold and distributed by the Superintendent of the **Presidency Jail**, *in original packages* as received from the Mungpoo Factory, at the rates herein noted **from the 1st May 1926 :—**

Quinine Sulphate.

For 60 lbs. and upwards at a time .. Rs. 18 per lb.

For 6 lbs. and over but less than 60 lbs. at a time .. .. .. „ 19 „

For any quantity less than 6 lbs. .. „ 20 „

Totaquina.

Irrespective of quantity .. Rs. 13-8 per lb.

Quinine Hydrochloride.

For 60 lbs. and upwards at a time .. Rs. 23 per lb.

For 6 lbs. and over but less than 60 lbs. at a time .. .. .. „ 24 „

For any quantity less than 6 lbs. .. „ 25 „

Quinine Di-Hydrochloride.

For 60 lbs. and upwards at a time .. Rs. 25 per lb.

For 6 lbs. and over but less than 60 lbs. at a time .. .. .. „ 26 „

For any quantity less than 6 lbs. .. „ 27 „

Quinidine Sulphate.

For 60 lbs. and upwards at a time .. Rs. 20 per lb.

For 6 lbs. and over but less than 60 lbs. at a time .. .. .. „ 21 „

For any quantity less than 6 lbs. .. „ 22 „

Cinchonidine Sulphate.

For 60 lbs. and upwards at a time .. Rs. 25 per lb.

For 6 lbs. and over but less than 60 lbs. at a time .. .. .. „ 26 „

For any quantity less than 6 lbs. .. „ 27 „

Cinchonine Sulphate.

For 60 lbs. and upwards at a time .. Rs. 12 per lb.

For 6 lbs. and over but less than 60 lbs. at a time .. .. .. „ 13 „

For any quantity less than 6 lbs. .. „ 14 „

*Cinchona Febrifuge (Powder).

For 60 lbs. and upwards at a time .. Rs. 9 per lb.

For 6 lbs. and over but less than 60 lbs. at a time .. .. .. „ 9 „

For any quantity less than 6 lbs. .. „ 10 „

*Cinchona Febrifuge (Tablets).

For 60 lbs. and upwards at a time .. Rs. 10 per lb.

For 6 lbs. and over but less than 60 lbs. at a time .. .. .. „ 10 „

For any quantity less than 6 lbs. .. „ 11 „

Quinoidine (Tablets).

For 60 lbs. and upwards at a time .. Rs. 5 per lb.

For 6 lbs. and over but less than 60 lbs. at a time .. .. .. „ 5 „

For any quantity less than 6 lbs. .. „ 6 „

Quinoidine (in Mass).

For 60 lbs. and upwards at a time .. Rs. 4 per lb.

For 6 lbs. and over but less than 60 lbs. at a time .. .. .. „ 4 „

For any quantity less than 6 lbs. .. „ 5 „

Cinchona Bark (in 50 pound original bags).

Per bag .. .. .. Rs. 25.

Quinine Tablets per box of 200 tablets each.

Rs. 2-8 (Bengal), Rs. 3 (outside Bengal)

Rs. 15-8-0 per lb.

Transit charges extra in every case.

***Cinchona Febrifuge** is for sale to Government and Charitable Institutions, Local Bodies and Missionaries only. **It is not for sale to Private Firms or the General Public.**

Quinine Sulphate is now open for sale to the Public at the above rates. But it will be supplied to Hospitals and Dispensaries of this Presidency only at the wholesale rate of Rs. 18 per pound irrespective of quantities.

Five and ten boxes of Quinine Tablets are sold to the public at the concession rates which will be intimated on application.

Provinces other than Bengal, Bihar and Orissa and Assam will get their supplies of Sulph. Quinine from the Director, Botanical Survey of India, Sibpur, Howrah.

Local sale at the jail gate from 10 to 12 noon.

The system of payment is by—*Cash in advance*—by "*Treasury Challans*," which should accompany the order or indent.

In cases where this is not possible, payment should be made by "*Remittance Transfer Receipts*" or crossed "*Cheques.*"

Indents unaccompanied by cash in advance will be sent Value Payable Post. Credit sale is not allowed except under special circumstances.

In the case of *Government officers* payments will be recovered by *Book Transfer, i.e., Countersigned Invoices*, in the event of *Cash* not accompanying the indent by "*Treasury Challans*," *Remittance Transfer Receipt or Cheque.*

2. Price and postage must accompany the price of the drug (when the drug is required by post).

The name of the Railway and Steamer Station or Post Office must be written distinctly when the parcels are required by Rail, Steamer or by Post. Railway parcels are sent by passenger train only.

A scale of postage is given below.

	1 oz.	2 ozs.	4 ozs.	½ lb.	¾ lb.	1 lb.
	As.	As.	As.	As.	As.	Rs. A.
Quinine Sulph. ..	..	..	7	7	11	0 11
Cinchona Feb. ..	..	..	7	7	11	0 11
Cinchona Feb. Tablets	..	..	7	7	11	0 11
Quinoidine Tablets ..	..	..	..	..	..	1 13
Quinine Hydrochlor. ..	5	5	7	7	..	0 11
Quinine Di-hydrochlor.	5	5	7	7	..	0 11
Quinine Tablets ..	..	..	7	7	11	0 11

	1¼ lb.	2 lb.	3 lb.	4 lb.	5 lb.	6 lb.
	Rs. A.	Rs. A.	Rs. A.	Rs. A.	Rs. A.	Rs. A.
Quinine Sulph. ..	0 15	1 3	1 7	1 15	2 7	2 15
Cinchona Feb. ..	0 15	0 15	1 7	1 11	1 15	2 7
Cinchona Feb. Tablets	1 3	1 3	1 11	1 15	2 7	2 15
Quinoidine Tablets ..	..	2 3	3 3	..	..	..
Quinine Hydrochlor. ..	1 1	0 15	1 7	1 11	..	..
Quinine Di-hydrochlor.	1 1	0 15	1 13	2 5	..	..
Quinine Tablets ..	0 15	0 14	1 7	1 11	1 15	2 3

Two different drugs are not packed in the same parcel and postage must be paid separately for each kind.

N.B.—Postage stamps are not accepted as revenue.

Government reserve the right to alter the price without notice.

Registered No. C207

The Calcutta Gazette

THURSDAY, MARCH 14, 1935.

PART III

Acts of the Bengal Legislative Council.

GOVERNMENT OF BENGAL.

Legislative Department.

NOTIFICATION.

No. 224L.—6th March, 1935.—In pursuance of the provisions of sub-section (*3*) of section 81 of the Government of India Act, the following Act of the local legislature of Bengal, having been assented to by the Governor General on the 1st March, 1935, is hereby published for general information.

Bengal Act II of 1935.

THE CALCUTTA IMPROVEMENT (AMENDMENT) ACT, 1934.

[Published in the *Calcutta Gazette* of the 14th March, 1935.]

An Act further to amend the Calcutta Improvement Act, 1911.

Ben. Act V of 1911.

WHEREAS it is expedient further to amend the Calcutta Improvement Act, 1911, in the manner hereinafter appearing;

It is hereby enacted as follows :—

Short title and commencement.

1. (*1*) This Act may be called the Calcutta Improvement (Amendment) Act, 1934.

(*2*) It shall come into force on such date as the Local Government may, by notification, appoint.

Amendment of section 78 of Bengal Act V of 1911.

2. In section 78 of the Calcutta Improvement Act, 1911, (hereinafter referred to as the said Act)—

(*a*) in clause (*ii*) of sub-section (*4*), for the words "at the rate of six *per cent. per annum*" the words "at such rate not exceeding six *per cent. per annum* as the Local Government may fix by notification" shall be substituted;

(*b*) in sub-section (*8*), for the words "at the rate of six *per cent. per annum*" the words "at the rate fixed under the provisions of that clause" shall be substituted; and

(*c*) after sub-section (*10*) the following sub-section shall be added, namely :—

"(*11*) Notwithstanding anything contained in clause (*ii*) of sub-section (*4*) or in sub-section (*8*), the rate of interest payable under the provisions of that clause or that sub-section, as the case may be, shall be, or continue to be, six *per cent. per annum* in cases where the sum, in consideration of which the acquisition of the land has been abandoned, has been fixed under sub-section (*3*) on or after the date of the commencement of the Calcutta Improvement (Amendment) Act, 1923, but before the date of the commencement of the Calcutta Improvement (Amendment) Act, 1934, and the agreement in respect of the payment of the same is executed during the period commencing with the date of the commencement of the Calcutta Improvement (Amendment) Act, 1923, and ending two months after the date of the commencement of the Calcutta Improvement (Amendment) Act, 1934."

Amendment of section 79.

3. In section 79 of the said Act, for the words "up to the date of realization" the words "due, up to the date of realization, which shall, in the case of betterment fees under section 78B or section 78C, be" shall be substituted.

A. DEC. WILLIAMS,
Secy. to the Govt. of Bengal.

Registered No. C207

The Calcutta Gazette

THURSDAY, MARCH 14, 1935.

PART IV

Bills introduced in the Bengal Legislative Council, Reports of Select Committees presented or to be presented to that Council, and Bills published before introduction in that Council.

BENGAL LEGISLATIVE COUNCIL DEPARTMENT.

NOTIFICATION.

No. 1290L.C.—5th March, 1935. — It is hereby notified for general information that at the meeting of the Bengal Legislative Council held on the 28th February, 1935, a motion was carried that the Bengal Ferries (Amendment) Bill, 1934, by Maulvi Abdul Hakim, M.L.C., be circulated for the purpose of eliciting opinion thereon before the 1st June, 1935. Expressions of opinion by public bodies or by individuals interested in the said Bill, which is republished together with its Statement of Objects and Reasons in this Gazette, should be sent so as to reach the undersigned before that date.

J. W. McKAY,
Secy. to the Bengal Legis. Council.

THE BENGAL FERRIES (AMENDMENT) BILL, 1934.

A

BILL

to amend the Bengal Ferries Act, 1885.

WHEREAS it is expedient to amend the Bengal Ferries Act, 1885, in the manner hereinafter appearing;

It is hereby enacted as follows :—

Short title.

1. This Act may be called the Bengal Ferries (Amendment) Act, 1934.

Extent and commencement.

2. It extends to the whole of Bengal.

And it shall come into force at once.

Amendment of section 9 of Ben. Act I of 1885.

3. At the end of section 9 of the Bengal Ferries Act, 1885, the words " provided such term shall not exceed three years " shall be added.

STATEMENT OF OBJECTS AND REASONS.

The object of this short amendment is to fix the maximum limit to the period to which a ferry should be leased. In some places the ferries are leased to farmers for long periods, namely, 10 to 15 years. In the district of Mymensingh the first class ferries have been leased for 15 years and the second class ferries have been leased for 10 years to a very rich ferry farmer. A great deal of exaction and exploitation is committed by these long termed ferry farmers upon the ignorant and helpless passengers during this long period in respect of ferry charges to be realised on goods and conveyances such as *dulis*, carts and *palanquins*, etc. Monopoly of any trade is harmful to the best interest of people at large. It is also financially injurious to the best interest of District Boards themselves. This power of granting long lease has been instrumental to scaring away the small farmers making rooms for only big ones with big purses.

Another reason for this amendment is that a Board should not be allowed to tie the hands of its successor in respect of the management of the Board's finance. This practice of allowing one Board to forestall the actions of a succeeding Board is bound to interfere with the efficient management of a Board and is against the principle of electing a new Board every third year or fourth year. If one Board is allowed to tie down the financial hand of all future Boards, where is the necessity of having a new Board few years after ?

In the opinion of the mover a lease for a term not exceeding three years will be best suited to the legitimate interest of District Boards and ferry farmers alike.

ABDUL HAKIM,

Member-in-charge.

The 30th November, 1934.

BENGAL LEGISLATIVE COUNCIL DEPARTMENT.

NOTIFICATION.

No. 1322L.C.—6th March, 1935.—In pursuance of the provisions of rule 20 of the Bengal Legislative Council Rules, 1920, the following Bill which was introduced in the Bengal Legislative Council on the 28th February, 1935, is hereby published for general information together with the Statement of Objects and Reasons annexed thereto.

THE ESTATES PARTITION (AMENDMENT) BILL, 1934.

A

BILL

to amend the Estates Partition Act, 1897.

WHEREAS it is expedient to amend the Estates Partition Act, 1897, in the manner hereinafter appearing ; Ben Act V of 1897.

AND WHEREAS the previous sanction of the Governor General has been obtained under sub-section (*3*) of section 80A of the Government of India Act to the passing of this Act ; 5 & 6 Geo. V., C. 61 ; 6 & 7 Geo. V., C. 37 ; 9 & 10 Geo. V., C. 101.

It is hereby enacted as follows :—

Short title.

1. This Act may be called the Estates Partition (Amendment) Act, 1934.

Commencement of the Act.

2. This Act shall come into force at once ; and it shall apply not only to partition proceedings which may be instituted hereafter, but also to such proceedings commenced before the passing of this Act but not finally disposed of.

Amendment of section 5 of Bengal Act V of 1897.

3. In section 5 of the Estates Partition Act, 1 7, after sub-section (*5*), the following sub-section shall be inserted, namely :—

"(*6*) Notwithstanding anything contained in sub-section (*3*) of section 5, if the interest of such recorded proprietor consists of an undivided share held in common tenancy in specific mouzas or tracts forming part of the parent estate but not extending over the whole area of the parent estate, the Collector, may, if he thinks it equitable and convenient, assign to him as his separate estate lands, either from such specific mouzas or tracts, or from other mouzas or tracts or partly from such mouzas or tracts and partly from other mouzas or tracts of the parent estate, the assets of which shall bear the same proportion to the assets of such specific mouzas or tracts as his undivided share in such specific mouzas or tracts bears to the entire mouzas or tracts."

STATEMENT OF OBJECTS AND REASONS.

It has been found that the provisions of sub-section (*3*) of section 5 of the Estates Partition Act V, 1897, may be used by a designing proprietor to cause serious inconvenience and irreparable mischief to another co-sharer proprietor and to tie the hands of the partition authorities in making an equitable partition.

For instance, suppose A and B are the two proprietors owning, respectively, 15-annas and 1-anna share in an undivided estate held in common tenancy. A does not live within the estate, but B has his homestead in it. There is a block of common land just contiguous to B's house forming his compound which, on the grounds of equity, convenience and compactness should be allotted to B at the time of partition, in respect of his 1-anna share. With a view to cause serious inconvenience to B, A selects that very block and transfers his 15-annas share of it to his son C. C gets his name registered and then A or B or C applies for partition.

Under section 5, sub-section (*3*), as it now stands, the partition authorities are bound to form a separate estate for C with 15-annas of that block, and they have no power to allot the entire block to B and to compensate C by other lands of equal assets.

The Bill is intended to remove this defect and empower the partition authorities to make an equitable partition notwithstanding any device which may cause difficulty and inconvenience to a co-sharer.

K. C. BANERJI,

Member-in-charge.

The 12th January, 1935.

J. W. MCKAY,

Secy. to the Bengal Legis. Council.

Registered No. C 207

No. 11 of 1935

The Calcutta Gazette

THURSDAY, MARCH 14, 1935.

CONTENTS:

	PAGE.		PAGE.
Statement under the Cotton Ginning and Pressing Factories Act, 1925 ..	345	Prices-current (wholesale and retail) of food-grains, salt, etc., in the districts of Bengal for the second half of February 1935	373—376
Abstract statement showing the approximate volume of traffic and tollage on canals in Bengal classed as Major and Minor Works and Navigation for the month of January 1935	346	Weather and Crop Report for the week ending 6th March 1935	377—380
Area leased for irrigation up to end of January 1935	347	Monthly Weather and Crop Report of Bengal for February 1935	381
Vital Statistics of towns of Bengal for the week ending 2nd March 1935 ..	348	Statements of weekly gauge readings on certain rivers in Bengal	382—383
Report on the Working of the Licensed Warehouse and Fire Brigade Act for the year ending 31st March 1934 ..	349—372	Howrah Municipality Declaration ..	384

SUPPLEMENT.

Official Papers.

FORM C—BENGAL.

STATEMENT OF COTTON PRESSED IN THE BENGAL PRESIDENCY FOR THE WEEK ENDING THE 1st MARCH 1935.

[Section 5(2) of the Cotton Ginning and Pressing Factories Act, 1925.]

Name of Division or block.	Number of bales pressed.				Districts included in the block.
	During the week.	During the corresponding week last year.	Since 1st September 1934 (the date prescribed by the Local Government as the commencement of the season).	During the corresponding period last year.	
The Bengal Presidency	1,772 or 1760·02 bales of 400 lbs. each.	1,019	9,104	11,084	All districts in the Presidency.

J. B. McBRIDE,

Chief Inspector of Factories, Bengal.

IRRIGATION DEPARTMENT, BENGAL.

Abstract statement showing the approximate volume of traffic and the tollage on canals in Bengal classed as Major Works and Minor Works and Navigation for the month of January 1935 as compared with the corresponding month of the previous year.

Canals.	1934-35.					
	Weight of cargo.		Rafts.		Tollage.	
	During the month.	To end of the month.	During the month.	To end of the month.	During the month.	To end of the month.
Major Works.	Tons.	Tons.	No.	No.	Rs.	Rs.
Midnapore Canal	1,078	12,408	1,600	13,350	1,602	13,923
Hijili Tidal Canal	144	16,309	150	700	306	31,174
Total ..	1,222	28,717	1,750	14,050	1,908	45,097
Minor Works and Navigation.						
Calcutta and Eastern Canals ..	49,496	294,005	10,677	72,888	32,272	2,02,478
Tolly's Nala	17,754	170,720	24,128	324,008	5,536	55,330
Madaripur Bil Route	7,285	707,647	7,182	14,482	5,835	1,79,521
Total ..	74,535	1,172,372	41,987	411,378	43,643	4,37,329
Magrahat Channels	9,923	49,132	2,132	11,292	2,878	19,251
Orissa Coast Canal	1,590	26,506	625	4,650	1,323	17,069
Grand Total ..	86,048	1,248,010	44,744	427,320	47,844	4,71,649

Canals.	1933-34.					
	Weight of cargo.		Rafts.		Tollage.	
	During the month.	To end of the month.	During the month.	To end of the month.	During the month.	To end of the month.
Major Works.	Tons.	Tons.	No.	No.	Rs.	Rs.
Midnapore Canal	1,705	12,169	4,700	17,255	2,018	13,087
Hijili Tidal Canal	212	22,088	150	1,200	548	38,484
Total ..	1,917	34,257	4,850	18,425	2,566	55,171
Minor Works and Navigation.						
Calcutta and Eastern Canals ..	36,539	292,162	9,074	88,978	25,204	2,03,366
Tolly's Nala	19,975	194,045	25,078	316,120	6,288	62,023
Madaripur Bil Route	6,326	563,900	4,258	20,243	5,379	1,54,511
Total ..	62,840	641,007	38,410	425,341	36,871	4,19,900
Magrahat Channels	4,216	29,588	1,850	9,148	3,268	19,099
Orissa Coast Canal	1,254	22,646	1,775	8,175	1,107	21,923
Grand Total ..	68,310	693,241	42,035	442,664	41,246	4,60,922

Canal.	January 1935.			
	Tollage, 1934-35.		Tollage, 1933-34.	
	During the month.	To end of the month.	During the month.	To end of the month.
	Rs.	Rs.	Rs.	Rs.
Sundarbans Steamer Route	5,374	53,796	4,964	50,596

J. D. WATSON,
Personal Assistant to the Chief Engineer to the Government of Bengal.

Calcutta, the 7th March 1935.

IRRIGATION DEPARTMENT, BENGAL.

Irrigation operations for the official year 1934-35.

Area leased for irrigation up to end of January 1935.

Circle.	District.	Canal.	Estimated full discharge.	Average discharge in month.	Discharge utilised.	Approximate area of land irrigated during the year up to the end of the month.	Approximate area of land under irrigation up to the same date last year.	Details of areas leased.							Rainfall, 1934-35.		Rainfall, 1933-34.	
								Long term leases.	Season leases.					Grand Total.	During month.	Up to end of month.	During month.	Up to end of month.
									Kharif.	Rabi.	Sugarcane.	Single watering.	Total.					
			Cusecs	Cusecs	Cusecs	Acres.	Acres.	Acres.	Acres.	Acres.	Acres.	Acres.	Acres.	Acres.	Inches.	Inches.	Inches.	Inches.
South-Western.	Midnapore ..	Midnapore	1,411	63	..	10,224	19,206	9,683	541	..	..	..	541	10,224	0·67	40·44	0·04	67·51
		Panskura	522	1	..	531	240	425	106	..	..	..	106	531	0·25	53·46	0·00	70·59
	Howrah ..	Tidal Reaches, Ranges I and II	..	..	..	..	..	..	..	..	..	..	..	..	0·00	71·93	0.00	94·48
		Total Midnapore Canal ..	..	..	..	10,755	19,446	10,108	647	..	..	..	647	10,755	..	..	..	..
		Total of the corresponding period last year ..	..	..	..	..	..	19,480	..	..	..	..	..	19,480	..	..	..	..
	Burdwan and Hooghly.	Damodar Canal proper ..	2,000	277	..	84,980	3,778	18,169	72,081*	..	..	39	72,120	90,289	0·31	48·58	0·25	71·83
		Eden Canal proper ..	..	..	147	18,651	14,563	9,797	8,380†	547	3	..	8,930	18,727	0·61	52·59	0·30	73·74
		Total Damodar Canal ..	..	..	..	103,631	18,341	27,966	80,461	547	3	39	81,050	109,016	..	..	..	..
		Total of the corresponding period last year ..	..	..	..	..	..	..	..	..	..	..	..	..	..	..	..	..
	Birbhum ..	Bakreswar Canal ..	129	..	..	7,761	7,231	7,344	397‡	18	..	..	415	7,759	1·21	48·10	0·61	71·60
		Total of the corresponding period last year ..	..	..	..	..	..	6,152	1,072	7	..	..	1,079	7,231	..	..	..	..
		GRAND TOTAL ..	..	..	..	122,147	45,018	45,418	81,505	565	3	39	82,112	127,530	..	..	..	..
		GRAND TOTAL OF THE CORRESPONDING PERIOD LAST YEAR ..	..	..	..	..	..	..	..	..	..	..	..	..	..	..	..	..

* Including 1 for hot weather and 6 for unauthorised irrigation. † Including 64 for hot weather. ‡ Including 31 for unauthorised irrigation.

J. D. WATSON,

Personal Assistant to the Chief Engineer to the Government of Bengal.

Calcutta, the 5th March 1935.

Vital statistics of towns with a population of 50,000 and over of the Bengal Presidency for the week ending Saturday, the 2nd March 1935.

Districts.	Nos.	Towns.	Population under registration according to Census of 1931.			Births registered.		Deaths registered.																							
																										Total of all causes.			Total of corresponding week of the previous year.		
			Male.	Female.	Total.	Number registered (excluding still-births).	Still-births registered.	Cholera.	Small-pox.	Plague.	Cerebro spinal meningitis.	Malaria.	Enteric fever.	Measles.	Relapsing fever.	Kala-azar.	Influenza.	Other fevers.	Dysentery.	Diarrhœa.	Pneumonia.	Phthisis.	Other respiratory diseases.	Injuries including suicide.	Deaths from child-birth.	Other causes.	Male.	Female.	Total.	Male.	Female.	Total.
Calcutta ..	1	Calcutta ..	814,948	381,786	1,196,734	491	41	83	34	..	44	11	13	6	..	2	8	34	20	12	58	70	110	4	..	345	471	383	854	437	331	769
Burdwan ..	2	Asansol Mining Settlement.	209,544	173,136	382,680	177	4	4	..	..	..	4	..	..	..	..	..	69	8	3	7	..	11	..	..	57	90	73	163	88	67	155
Howrah ..	3	Howrah ..	145,120	79,753	224,873	97	9	15	6	..	..	8	2	..	..	..	..	3	16	14	20	5	20	2	..	43	84	70	154	89	50	139
Dacca ..	4	Dacca ..	79,365	59,153	138,518	97	..	1	2	..	..	..	..	..	..	2	..	1	3	2	8	..	16	3	1	16	32	23	55	29	16	45
24-Parganas ..	5	Bhatpara ..	60,134	24,841	84,975	29	..	..	1	..	..	..	..	..	..	..	..	7	1	2	3	..	..	..	..	..	8	6	14	11	9	20
Chittagong ..	6	Chittagong ..	35,049	18,107	53,156	26	..	2	..	..	..	..	..	..	..	1	..	5	..	..	..	..	..	1	..	2	6	5	11	6	5	11

Calcutta, the 9th March 1935.

R. B. KHAMBATA, M.R.C.S. (ENG.), L.R.C.P. (LOND.), D.P.H. (CAMB.), *Director of Public Health, Bengal.*

Report on the working of the Licensed Warehouse and Fire Brigade Act for the year ending 31st March 1934.

NOTIFICATION.

No. 1793M.—1st March 1935.—The following is published for general information under section 41 of the Licensed Warehouse and Fire Brigade Act, 1893 (Bengal Act I of 1893).

G. S. DUTT,
Secy. to the Govt. of Bengal,
Local Self-Govt. Dept.

No. 1675M., dated Chinsura, the 6th September 1934.

Memo.—By L. B. Burrows, Esq., C.B.E., Commissioner of the Burdwan Division.

Copy of memorandum No. 3584G., dated the 17th August 1934, from the District Magistrate of Howrah, with enclosures, forwarded to the Secretary to the Government of Bengal, Local Self-Government Department, for information.

2. In accordance with Government orders communicated in memorandum No. 544M. of the 7th February 1934, the question of the proposed reduction in the amount payable by the Howrah Municipality from 14 per cent. to 10 per cent. is to be considered after Garden Reach is separated from Calcutta.

No. 3584G., dated Howrah, the 17th August 1934.

Memo.—By the Magistrate of Howrah.

Copy of the following, forwarded to the Commissioner of the Burdwan Division, Chinsura.

No. 1535G., dated Howrah, the 11th August 1934.

From—B. C. Datta, Esq., M.A., LL.B., Bar.-at-Law, Chairman, Howrah Municipality,

To—The Magistrate of Howrah.

As requested in your letter No. 3112-G., dated the 17th July 1934, I have the honour to submit herewith two statements, one showing the warehouses licensed under the Fire Brigade Act and the other showing the receipts and disbursements on account of the same for the year 1933-34. The former statement has been prepared in accordance with the instructions contained in the Government of Bengal, Municipal Department, letter No. 470M., dated the 14th February 1917, to the Commissioner of Burdwan Division, a copy of which was forwarded under his memorandum No. 137/XXIII-8, dated the 16th February 1917.

The collection of fees worked out to be 69·3 per cent. of the arrear demand and 90·5 per cent. of the current demand as against 83·3 per cent. of the arrear demand and 89 per cent. of the current demand of the year 1932-33. The demand for the year under report amounted to Rs. 28,174 and the collection to Rs. 24,859 as against Rs. 26,191 for demand and Rs. 23,237 for collection respectively for the year 1932-33.

The contribution which the Commissioners were called upon to pay for the maintenance of the Fire Brigade amounted to Rs. 57,837.

The directions contained in the first proviso to section 10 of the Act have been followed.

May I take the liberty of pointing out on the one hand the differences between our collections and the payments we are compelled to make to the Fire Brigade and the percentage of charges to which we are assessed. Having regard, however, to the number of cars that are maintained in Howrah and in Calcutta, the percentage of 14 per cent. on Howrah is out of all proportion to that to which the Calcutta Corporation is assessed.

The percentage of 14 per cent. is therefore highly iniquitous and ought to be reconsidered.

Statement of Receipts and Disbursements for 1933-34.

Receipts.

	Demand.			Collection.			Remission.			Total balance.	Total.
	Arrear.	Current	Total.	Arrear.	Current.	Total.	Arrear.	Current.	Total.		
	Rs.	Rs.	Rs.	Rs.	Rs.	Rs.	Rs.	Rs.	Rs.	Rs.	Rs.
A.—To balance on the 1st April 1933 ..	..	..	..	..	..	..	..	..	..	..	..
B.—To license fees levied under sections 10 and 24.	2,843	25,331	28,174	1,939	22,920	24,859	..	130	..	3,185	3,185
C.—To mutation fees levied under section 17.	..	45	45	..	45	45	..	..	..	..	..
D.—To rates levied under section 25(1) A.	..	..	..	..	..	..	..	..	..	..	..
E.—To rates levied under section 25(1) B.	..	..	..	..	..	..	..	..	..	..	..
F.—To rates levied under section 25(1) C.	..	..	..	..	..	..	..	..	..	..	..
Fines and penalties under the Act ..	..	..	..	..	..	..	..	..	..	..	..
Contribution from General Fund ..	..	..	..	..	..	32,933	..	..	..	..	..

Disbursements.

	Rs.
Establishment—	
Contribution to Fire Brigade	57,837
Any other special items as specified	..
Closing balance on the 31st March	..

List of warehouses, 1933-34.

Street or holding number with the number of warehouses shown in brackets when they are more than one.

Banstala Ghat Road, one without number.

Bazalpara Lane, 13.

Benares Road, 45, 31.

Belilious Road, 174/4.

Belilious Lane, 36.

Bipradas Chatterji Lane, 31.

Circular Road, 126, 548, 684, 1, 793 and 794, 785.

College Road, 77.

Currie Road, 142/2.

Cowies Ghat Road, 102, one without number.

Dasani Bagan Lane, 38, 133.

Dharmatala Lane, Howrah, 3, 72.

Dharmatala Lane, Sulkia, 12/1, 94, 53, 110/1, 107-108/A, 5 and 6.

Foreshore Road, 23 and 24, 31 and 32, 27 and 28, 21 and 22, 62, 103/2, 19 and 20, 7 and 8 (33 and 34 and 5, 6), 1, 103/20, 122, 111, 129, 120, 37 and 39, 37 and 39/2, 94/4 and 94/42, 140, 45, 45/1, 45/2, 45/3, 45/4, 104/3.

Grand Trunk Road, 217, 312, 319, 369, 74 and 75, 474 and 475, 95 and 519, 123, 140, 506, 517, 529, 532, 139, 194.

Grand Trunk Road (Sulkia), one holding without number, 305, 116, 117, 117/1, 227, 318/1, 428, 351, 355, 355/1, 360.

Girish Ghose Lane, 46.

Golabari Road, 45.

Gurgola Ghat Road, 2, 3 and 6, 5.

Grierson Road, 4.

Grand Foreshore Road, 1, 1, 1, 16/1.

Haldarpara Lane, 26/1.

Howrah Road, 6, 13, 19, 105/1, 20, 71, 104, 106/107, 111, 24/25 (66, 66/1, 66/2, 66/3, 66/4, 66/5), 76, 14/1, 85, 12, 1 and 2, 42, 1/J, 1/L, 1/D, 1/E.

Hazarimul Saha Road, 3, 2, 4-6.

Harcourt Lane, 51.

Joynarain Babu and Ananda Dutta Lane, 62/1.

Jayabibi Lane, 36 and 39, 40.

Jeliapara 2nd Bye Lane, 17/1, 21.

Kasundia Road, 1.

Kala Chand Nundy Lane, one without number.

Kali Prosad Chakraverty Lane, 15.

Kaldanga Lane, 11.

Kalabagan Lane, one without number.

Kali Kundu Lane, 44/3 and 44.

Kali Banerji Lane, 23, 31/2.

Khetra Mitra Lane, 2, 3, 17, 89, 90/1, 90, 98, 100/1, 102, 99, 101, 66, 52, 22.

Krishna Kamal Bhattacherji Lane, 6.

Khurut Road, 61, 164, 183, 191, 217, 131/1, 110.

Kissen Lal Burman Road, 30, 26.

Makardah Road, 21/1, 33/3.

Mati Chand Road, 1/10, 1/11.

Morapara Ghat Road, one without number.

Mukram Kanuria Road, 1.

Naskarpara Lane, 109, one without number.

New Ghusury Road, 9/12, 12, 9 and 12.

Old Ghusury Road, 17, 13, 28, 47, 49, 51, 54, 53, 62/1, 63/1, 64, 122, 121, 140/144-45, 149/4, 149/10, 149/11, 174, 184, 194, 149/6, 56/2, 56/3, 160/3, 160/6, 159/2-4, 62, 25 and 25/1, 56/12, 56/10, 62, two without number, 62/10, 56/13/2.

Panjaripara Lane, 3.

Panchanantala Road, 254/2, 182, 94/7, 94/9, 96, 100, 163, 216/1.

Peshkar Lane, 54, 54.

Priya Manna Bustee 3rd Bye Lane, 153.

Raj Narayan Roy Choudhury Ghat Road, 46.

Ramkristopur Ghat Road, 72.

Sakher Bazar, 28.

Shalimar Road, 41, 20, one without number.

Shibpur Road, 45, 194/1, 196, 143, 55/2, 62.

Sreeram Dhang Road, 16, 117.

Sreebash Dutt Road, 14.

Telkul Ghat Road, 28 and 29, 27, 20.

Umacharan Bhattacherji Lane, 30.

Upen Mitra Lane, 29, 41, 38.

Uttam Ghose Lane, 1.

No. S. 5335, dated Calcutta, the 3rd January 1935.

From—J. C. Mukerjea, Esq., Chief Executive Officer of the Corporation of Calcutta,

To—The Secretary to the Government of Bengal, Local Self-Government Department.

I have the honour to submit the following, under section 41 of Act I (B.C.) of 1893, for the year 1933-34 in accordance with the instructions contained in Government order No. 387-T.M., dated the 27th May 1910.

2. During the year under report the fees under sections 10 and 24 of the said Act were levied at 10 per cent. on the annual valuation of warehouses as in the preceding year.

3. A statement showing the receipts and disbursements of the Licensed Warehouse Fund and a list of jute and other licensed warehouses for the year 1933-34, as desired in Government order No. 469M., dated the 14th February 1917, are appended.

Statement of Receipts and Disbursements of the Licensed Warehouse (Fire Brigade) Fund, during the year 1933-34.

RECEIPTS.

Heads of receipts.	Demand.			Collection.			Remission.			Balance.		
	Arrear.	Current.	Total.	Arrear.	Current.	Total.	Arrear.	Current.	Total.	Arrear.	Current.	Total.
	Rs.	Rs.	Rs.	Rs.	Rs. a.	Rs. a.	Rs.	Rs. a.	Rs. a.	Rs.	Rs.	Rs.
(a) License fees levied under sections 10 and 24.	144	1,32,837	1,32,981	144	1,30,482 8	1,30,626 8	Nil	2,354 8	2,354 8	Nil	Nil	..
(b) Supplementary demand for 1933-34 created after 31st March 1933.	..	..	..	..	..	..	..	..	..	..	..	..
(c) Mutation fees levied under section 11.	Nil	125	125	..	125 0	125 0	..	..	..	..	..	..
(d) Rates levied under section 25(1) (a).	..	..	..	..	..	..	..	..	..	..	..	..
(e) Rates levied under section 25(1) (b).	..	..	..	..	..	..	..	..	..	..	..	..
(f) Rates levied under section 25(1) (c).	..	..	..	..	..	..	..	..	..	..	..	..
(g) Fines and penalties under the Act.	..	..	..	..	..	698 0	..	..	..	..	..	..
(h) Contribution from Government towards the cost of establishment.	..	..	..	..	..	4,050 0	..	..	..	..	..	..
(i) Contribution from the Municipal Fund.	..	..	..	..	..	2,23,888 8	..	..	..	..	..	..

	Rs. a.
Total ..	3,59,388 0
Less adjustment of wrong demand ..	..
Net receipts	3,59,388 0
Add opening balance	Nil
Total ..	3,59,388 0

Disbursements.

	Rs. a.
(1) Establishment	4,100 0
(2) Contribution to Fire Brigade	3,55,288 0
(3) Any other special item as specified	Nil
Total ..	3,59,388 0
Closing balance on 31st March 1934 ..	Nil

List of Jute Warehouses, 1933-34.

Street or holding number of warehouses shown in brackets where more than one.

Ward 1.

Canal West Road, 39/2, 39/3.
Chitpore Road Upper, 178, 206.
Durga Charan Mukherji Road, 33, 32, 41, 42, and 1/1.
Guliff Street, 16 and 26.

Ward 2.

Ahiritolla Street, 4, 4/2, 4/3, 4/1, 5, 6, 193 (2).
Beniatolla Street, 16A, 115.
Bipradas Dey Lane, 1.
Chitpore Road Upper, 243, 244.
Chitpore Bridge Approach, 2.
Darmahatta Street, 75, 77, 77/1, 77/2 and 5, 85/1, 80, 82, 87, 88, 92, 93, 100, 101, 108, 121, 124, 125, 133, 135, 134, 136, 140, 138, 140/3, 1, 41, 142, 143 and 143/2-5.
Darmahatta 1st Lane, 3-C, 3-D, 3-F.
Dattapara Lane, 11, 12, 13.
Hara Ch. Mullick Street, 2, 4, 5, 6, 7, 9, 10, 12, 13, 14, 11, 13/6, 16, 19, 20, 23, 24, 24/1, 25, 27, 28.
Hara Ch. Mullick Lane, 16, 23.
Madan Mohan Dutt Lane, 3.
Manick Bose Ghat Street, 1, 1/1, 3, 17/1, 33, 40, 43, 44, 44/1, 46, 47, 48, 49, 39/9, 44/2, 44/4.
Natherbagan Street, 11A, 11B, 11/1 and 2, 8.
Nayan Sur Lane, 1/1A, 1/1B, 1/2, 1/A, 9.
Ramdhan Khan Lane, 4/1, 4/2, 5, 4/2C.
Sovabazar Street, 2, 6, 8 and 12, 10, 16, 32, 9, 36, 38, 48, 46A, 50A, 54, 64, 41, 29, 19, 7A, 11A, 11D, 5, 1 (2), 22, 15, 23.
Strand Road, 66, 67/7 (2), 67/18/P-18, 67/8/P-19.

Ward 3.

Badridas Temple Street, 3.
Canal West Road, 25/3.
Gourbere Lane, 55.

Ward 5.

Strand Road, P-56.

Ward 9.

Circular Road Upper, 308.

Ward 19.

Convent Lane, 12.

Ward 24.

Kantapukur Street, "Y" shed.

Ward 25.

Garden Reach Road, 9.
Kidderpore "D" shed.

Ward 26.

Badartolla Road, 72.
Brace Bridge Road, 1.
Garden Reach Road, 43.

Ward 29.

Canal Circular Road, 24.
Canal East Road, 5/12, 5/15, 5/16, 5/18.
Harish Neogi Road, 35.
Narkeldanga Main Road, 102.

Ward 30.

Banamali Chatterji Street, 36.
Barrackpore Trunk Road, 85, 86/1.
Belgachia Road, 4A, 5B, 6B, 11, 38/H/2, 38/H/1, 65/2, 65/4, 66, 66/2/C, 66/2/B, 83/9, 101B, 112.
Jogendranath Bose Lane, 1.
Krishna Mullick Lane, 1A.
New Canal Road, 2/3, 2/4/1, 6.
Nilmani Row, 12, 12/4, 12/6.
Pran Krishna Mukherji Road, 21 (6), 22/2, 22/1, 22, 24/1, 25 (3), 25/A, 26 (2), 26/6/1, 26/7, 26/9, 28, 31, 32, 33, 34, 34/2 (3), 34/3 (2), 34/4 (2), 36, 37, 37/1A, 34/5.
Srish Chandra Chaudhury Lane, 21, 23.

Ward 31.

Barrackpore Trunk Road, 58.
Belgachia Road, 40, 39 (2), 56, 57.
Dum Dum Road, 1/H/32.
Paikparah Raja Manindra Road, 19/H/28, 19/H/33.

Ward 32.

Barrackpore Trunk Road, 3/1 (2), 32/H/9.
Brajadoyal Saha Road, 6, 8.
Panchanan Mukherji Road, 2, 3, 4, 5, 7, 9, 10.
Chitpore Ghat Lane, 1, 3, P-4, P-6, P-7, P-11, P-12, 7, 8, 9, 14.
Cossipore Road, 3, 4, 11, 27, 32, 14A.
Dilwarjung Road, 2, 6, 6/1, 7, 3/3, 3/4.
Gopal Chandra Chatterji Road, 8/H/1.
Gopi Mandal Lane, 7.
Gun Foundry Road, 1/4, 25, 2/3, 3/1, 24A, 24B, 4, 24/1A, 24/1B.
Kali Prasanna Sinha Road, 1, 4, 5, 7, 8, 9, 15.
Nawabputty Road, 2, 2/2, 4, 5, 6, P-3, 1, 1/1, 2/1, 2/3, 2/4.
Jogendranath Mukherji Lane, 4, 10, 11, 13, 16.
Banga Sen Lane, 2.
Prankrishna Mukherji Road, 4, 4/A, 5, 6, 8, 9, 9/1, 10.
Preyanath Mukherji Road, 3, 4, 6.
Ram Gopal Ghose Road, 1A, 1/1 and 6.
Ratan Babu Lane, 15A.
Rustomjee Parsee Road, 5.
Setpukur Road, 4, 7.
Strand Road, 2.
Turner Road, 2.

List of Warehouses other than Jute, 1933-34.

Street or holding number of warehouses shown in brackets where more than one.

Ward 1.

Ballav Street, 2, 2/1.
Bhabanath Sen Street, 2.
Bosepara Lane, 49/1.
Canal West Road, 39, 39/1, 38, 36/1, 37/4.
Chitpore Road Upper, 176, 177, 199/1/1 (2), 199/7, 199/1/2.
Cornwallis Street, 115/8, 116, 136/1 (2), 138/1, 134.
Dhaniabagan Lane, 35.
Galiff Street, 21/H/1, 20 (20), 18.
Grey Street, 117.
Kaliprasanna Chakraburtty Street, 12/3.
Mohanlal Street, 20.
Nandakissore Street, 1 (2), 2 (5).
Pal Street, 1, 4 (2), 7/1, 11, 6, 4, 9, 18, 10.
Rasick Mitra Lane, 11.
R. G. Kar Road, 21, 28, 23 (2), 24, 28.

Ward 2.

Ahiritolla Street, 168 (2).
Beniatola Street, 1.
Chitpore Road Upper, P-1 (2), P-2, 214/1, 220 (4), 225.
Madan Mohan Dutt Lane, 6.
Manick Bose Ghat Street, 20/1.
Mohamed Romjan Lane, 4, 6 (2), 11 (14), 17.
Natherbagan Street, 13/1/1.
Nimtala Ghat Street, 68, 71/1, 80, 83, 83/1, 86/1.
Sovabazar Street, 98, 126, 122.
Strand Road, 67/10 (3), 67/R/18, let No. 15, 63, 64.

Ward 3.

Brindaban Bose Lane, 30.
Canal West Road, 23/1, 25, 30/H/4, 35.
Cornwallis Street, 76/1, 148.
Circular Road Upper, 245, 152, 243 (2), 244 (2), 244/2.
Grey Street, 1, 7 (3).
Hatibagan Road, 4.
Musjidbari Street, 167/H/d.
Ultadingi Road, 3, 14 (2), 22.
Raja Dinendra Street, 72.
Simla Road, 41.

Ward 4.

Bahir Mirzapore Street, 2.
Circular Road Upper, 120, 258/17, 258/16 and 15/2.
Canal West Road, 15/H/2 (4), 15/H/1 (2), 16/H/16, 16/H/17, 16/H, 17/H/8 (2), 17/H/9, 17/H, 17/H/36, 17/2, 17/H, 17/H/2, 17/H/30 (2), 17 (2), 17/H/32, 17/H/36, 19/H/8, 18/H/2, 18/H/3, 18/1 (2), 18/2, 18/H/3 (3), 19 (11).
Gas Street, 3/H/3, 5/3/H/1, 4/1.
Machuabazar Street, 68.
Ram Mohan Roy Road, 13.

Ward 5.

Baishnab Charan Sett Street, 2.
Banstolla Street, 2.
Burtolla Street, 82.
Doyahatta Street, 3.
Chitpore Road Upper, 402 (10).
Cotton Street, 116, 117, 117/1, 117 (2), 125, 133 (2), 135, 134.
Darmahatta Street, 20 (4), 23/1, 31, 36, 36/1, 49, 25, 58, 61, 63, 64 (8), 65 (7), 65/1 (22), 67, 68 (3), 69, 187 (27), 192, 192/1, 206/1.
Jagannath Ghat Road, P-48.
Jorabagan Street, 7, 10, 19, 20, 25, 28.
Kalakar Lane, 2 (2), 8.
Kalakar Street, 9.
Mandal Street, 18/4, 43.
Meerbahar Ghat Street, 1.
Nimtala Ghat Street, 4B, 5, 5/1 (2).
Nalin Sett Road, 78 (2), 82 (2).
Ramlal Sett Road, 3/1.
Raghunandan Lane, 3 (3).
Sovabazar Street, 14/3, 8.
Strand Road, 62 (3), 62/2, 62/1, 63, 67/16/P-29, 67/16/P-31, 67/16/P-32, 67/16, 67/16/P-34, 67/17, 67/16/P-34 and 35, 67/18/P-32, 67/18/P-37 (3), 67/18/P-38 (2), 67/18/P-29, 67/18/P-40, 67/18/P-41 (2), 67/18/P-42, (3), 67/21/P-43 (4), 67/21/P-41, 67/23/P-45-47, 67/24/P-48 and 49, 67/25/26.
Strand Bank Road, P-225.

Ward 6.

Balaram Dey Street, 70/1/1A, 52/1.
Baranoshi Ghose Street, 42.
Muktaram Babu Street, 99B, 105.
Munshi Sadaruddin Lane, 37.

Ward 7.

Canning Street, 10, 48, 60 (3), 63 and 64 (3), 65 (4), 66 (2), 66 and 67 (3), 68, 71, 55.
Clive Street, 42 (6), 42/1/1 (3), 42/2, 42/3 (4), 29/1, 49A, 70/7, 71-E, 72/1 (2), 73 (2), 79 (2), 61, 29, 82, 41.
Cotton Street, 68, 73.
David Joseph Lane, 6.
Old Court House Lane, 2 and 3 (2), 4 (3), 5 (3), 15, 8.
Jackson Lane, 4, 4/5, 10, 6, 12 (2), 18 (2), 20.
Radhabazar Lane, 11.
Sukeas Lane, 13.
Synagogue Street, 15.
Pollock Street, 2 (4).
Old China Bazar Street, 146/2, 205, 219.
Strand Road, 67/4, Jetty No. 1, Gate.

Ward 8.

Bowbazar Street, 242.
Chitpore Road Lower, 11/8 (2), 22, 28, 31.
Chittaranjan Avenue, 28 (4), 28A (7), 42, 57 (2).
Debendra Mullick Street, 27/2 (2), 27/1, 27/4, 27/3.
Balai Dutt Street, 9 (3), 7.
Giri Babu Lane, 28.
Harinbari Lane, 36.
Machuabazar Street, 1/1 (2).
Kalutolla Street, 34/1.

Ward 9.

Amherst Street, 4, 128/1/1, 133H, 176, 137, 151.
Baitakhana Road, 1 and 2, 5H/1, 168, 169.
Bowbazar Street, 167A, 167B (10), 171, 172 (3), 198.
Belliaghatta Road, 132.
Canal West Road, 1/2.
Circular Road Upper, 4, 7, 8, 64.
Maharani Swarnamoyee Road, 7/1.
Joynarain Lane, 1/1A, 4.
Mirzapore Street, 27/6, 28/1A (2), 33, 63/1.
Netai Babu Lane, 1 (2).
Noor Mohammed Sircar Lane, 7.
Prem Chand Boral Street, 49.
Ramkanta Mistry Lane, 1, 2.
Scott Lane, 34/1.

Ward 10.

Bentinck Street, 77 and 77/1.
Bowbazar Street, 46, 52/9 to 52/14, 13, 10.
Dharmatala Street, 167 (7), 157B (6), 167/3, 167/5.
Khairoo Lane, 14.
Metcalfe Street, 85.
Prinsep Street, 80.
Chittaranjan Avenue South, P-98.
Roberts Street, 16, 12.
Weston Street, 8, 11.

Ward 11.

Bowbazar Street, 119, 124/1/1, 126, 127, 128/1 (2), 128/1/1, 132, 128/1/3, 128/1/H.
Circular Road Lower, 124, 132.
Dharmatala Street, 125.
Huzurimall Lane, 5.
Refuse Lane, 2.
Sankaritolla Lane, 44.
Sosi Bhusan Dey Street, 11, 11/A, 5/2.
St. James Lane, 20, P-7.

Ward 12.

Bentinck Street, P-10.
British Indian Street, 1.
Esplanade Row East, 8.
Hare Street, 16.
Lall Bazar Street, 4.
Mangoe Lane, 3 (5), 2/1, 25, 3/1.
Mission Row, 1, 1/1A, 4, 7, 8, 9.
Waterloo Street, 4, 24A.

Ward 13.

Chowringhee Road, 10 (2), 19.
Corporation Place, 1.
Corporation Street, 121/2, 129.
Free School Street, 59 (2), 66/1.
Marquis Street, 7/2, 12A.
Market Street, 15.
Wellesley Street, 2, 15, 25-A, 28.

Ward 14.

Alimuddin Street, 37.
Circular Road Lower, 76, 79/28, 90, 93, 88 (3).
Corporation Street, 370, 49/50, 106.
Ripon Street, 99.
Taltala Bazar Street, 1.
Wellesley Street, 80, 83.
Wellesley Square, 4.
Ram Chandra Das Row, 2.

Ward 15.

Wood Street, 15.

Ward 16.

Russel Street, 13A.
Chowringhee Road, 30, 31.

Ward 18.

Canal South Road, 15 and 16, 16 , 17, 18 (2), 19, 20 (2), 32 (9).
Tangra Road, 41.

Ward 19.

Anandagopal Palit Road, 41, 52/5.
Belliaghatta Road, 12, 18.
Circular Road Lower, 154 (3).
Convent Road, 3, 7, 21, 23.
Canal Street, 13.
Canal South Road, 1, 2 (6), 3 (2), 4 (2), 5 (3), 6 (2), 7, 10 (2), 11, 12/1.
Kamardanga Road, 7.
Lime Street, 1, 3.
Middle Road, Entally, 26, 36, 37 (2), 23.
Police Hospital Road, 10.
Sambhu Babu Lane, 54.
South Road, Entally, 5, 18, 67/1, 90.
South Sealdah Road, 1/1, 2/1.
Tangra Road, 14, 16, 18.

Ward 20.

Bijli Road, 1/1.
Gorachand Road, 21.
Hatibagan Road North, 5, 7, 10, 12.
Jannagore Road, 3.

Ward 21.

Puddapoker Lane, 2.
Hazra Road, 43.
Shamsul Huda Road, 43.
Ahiripukur 2nd Lane, 22/1.

Ward 22.

Chaulputty Road, 50/1, 53.
Circular Road Lower, 230, 248.
Debendra Ghose Road, 30.
Romesh Mitra Road, 37.
Harish Mukherji Road, 158.
Harish Chatterji Road, 16D, 27/3, 30 (2), 36, 38 (2), 44/1, 45, 46, 44, 74.
Hazra Road, 14, 114/3, 127D.
Kalighat Road, 37, 71, 89, 106, 108.
Mahim Halder Road, 32/1/1.
Madan Pal Lane, 16, 36/3, 37.
Nepal Bhattacharji Street, 10/1.
Russa Road, 6/2, 11/1, 11/1/1 (3), 11/3, P-162, 143, 54/1, 160 (2), 11/3/4.
Shamananda Road, 16.

Ward 23.

Bridge Road, 3/8, 6, 7, 3/4, 17, 11, 8, 3, 19 (2), 20 (2).
Chetla Hat Road, 20/14.
Chetla Central Road, 27, 29/H/1 (2).
Chetla Road, 2, 84/1, 84/2, 83, 40.
Moyerpore Road, 73/4, 13, 12/1/4.

Ward 24.

Bhukoylash Road, 1.
Koylasharak Road, 11/2.
Kantapukur Road (off Dock East Boundary), W. shed, C. shed.
R. I. M. Dockyard.
Hide Road, 3 (2), 5 (2), Block F, D-1, B-2.
Mominpore Road, 8/1.

Ward 25.

Circular Garden Reach Road, 120.
Garden Reach Road, 98 (3), 77.
Gopal Doctor Road, 5/1, 33.
Hide Road, "A" shed, 5 (2), H/2 Block.
Hem Chandra Street, 1/4, 2/1, 3.
Munshigunge Road, 3 (2), 4/2 (2), 9/2/1, 9/17, 19, 19A, 9A, 28, 33/2 (4), 33/3 (2), 10.
King George's Dock, 4, 8.
Mohan Chand Road, 14.
Nrittya Ghose Street, 3 (7), 4.
Ramanath Pal Road, 12 (2).
Ramkamal Street, 28/1, 3/1.
Watgunge Street, 37/1.

Ward 26.

Akra Road, Q-324 (3), T (2), 140, Q-323, Q-191.
Badartolla Road, Z-3, Z-3-73, Z.
Bichalighat Road, B-138, B-131, B-133, B-124, B-145, B-134, B-150, B-101, B-134, B (2).
Garden Reach Road, Z-1-44, C-4-42, C-1-43, E-7-63, F-47, G-1 (2), I-43 (2), B-12, B-10 (3), R-39, S-122, C and S. B., A-28.
Jelliapara Road, Z-3 (2), 189/3.
Middle Road, 145 (3).
New Ghat Road, R-7.
Nichoobagan, S (3), S-158, S-141.
Paharpore Road, J (3), N.
Prince Dilwarjah Road, B-7, B-1.
Rameswarpore Road, I-65, Block I.
Fatehpur, J-277.

Ward 27.

Dihi Serampore Road, 8/1.
Hazra Road, 113 (3), 72, 112 (2).
Jamir Lane, 13/1/3A.
Protapaditya Road, 63.
Russa Road, 139/2.
Andul Raj Road, 7, 10, 12.
Tollygunge Circular Road, 13 and 15.
Tollygunge Road, 74, 75, 114/4, 113, 73, 76 (4).

Ward 28.

Belliaghatta Main Road, 168/26, 135, 134, 133, 150A, 126/2, 147.
Canal East Road, 43/H/1, 43/H/2, 43/H/3, 43/H/4 (2), 43/H/5, 43/H/6, 43/H/6.
Chaulpati Road, 3, 8, 18, 20, 39, 40, 41 (3), 42 (2), 43 (2), 46, 47, 48, 49 (2), 50 (2), 52, 53, 54.

Ward 29.

Canal East Road, 2 (2), 8/1, 9/1/2, 9/1/3, 10/H/3 (2), 11/1, 12/H/1, 14/H/10, 14/H/8, 14/H/3, 14/H/2 (2), 14/H/1 (2), 15, 16/H/1 (2), 16/H/4, 16/2/H/1 (2), 17/1/H/3 (2), 20 (2), 21/H/2, 21/H/1 (2), 25/H/2, 26/H/1, 23/H/5, 26/H/6, 26/H/9, 27/1/H/2, 30/H/1, 30/H/2, 39/H/1, 41/H/1, 41/H/2.
Bagmari Road, 300, 38/H/3.
Harish Neogi Road, 20/H/2, 20/H/10, 19/H/12/1, 19/H/19.
Manicktolla Main Road, 64, 100 (2), 233.
Mati Mitra Lane, 1.
Muraripukur Road, 15/1/H/18, 38, 46, 47.
Pearabagan Lane, 15.
Ultadanga Main Road, 2/1/H/11, 149/H/1, 82 and 104, 55/1.

Ward 30.

Bengachia Road, 33A.

Ward 31.

Umakanta Sen Lane, 1/1, 7.
Paikparah Raja Manindra Road, 12/1.

Ward 32.

Barrackpore Trunk Road, 25/1, 13/1.
Cossipore Road, 90, 100/4.
Kali Kumar Banerji Lane, 19.
Lock Gate Road, 24, 12, 13.
Pran Krishna Mukherji Road, 1/H/4, 11/1/H/3.
Ram Gopal Ghose Lane, 7.
Sugar Works Lane, 1.

No. F. B. 545, dated Calcutta, the 13th September 1934.

From—L. H. Colson, Esq., C.I.E., J.P., I.P., Commissioner of Police, Calcutta,

To—The Secretary to the Government of Bengal, Local Self-Government Department,

I have the honour to submit the report on the working of the Calcutta Fire Brigade for the year ending the 31st March 1934, as drawn by A. Frederick, Esq., officiating Chief Officer, Calcutta Fire Brigade.

No. F. B. 543, dated Calcutta, the 13th September 1934.

From—A. Frederick, Esq., officiating Chief Officer, Calcutta Fire Brigade,

To—The Secretary to the Government of Bengal, Local Self-Government Department.

(Through L. H. Colson, Esq., C.I.E., J.P. I.P., Commissioner of Police, Calcutta.)

I have the honour to submit the following report on the working of the Calcutta Fire Brigade for the year ending the 31st March 1934.

The work of the department during the year under review has been normal.

Financial statement.—The statement of receipts and expenditure and payments made by municipalities within the jurisdiction of the Fire Brigade and Licensed Warehouse Act (I of 1893) is given in Appendix I.

The cost of maintenance of the Fire Brigade is derived from contributions by (*a*) the Calcutta Municipality and (*b*) the Howrah Municipality, the former contributing 86 per cent. and the latter 14 per cent.

Fees for licensed warehouse are charged under section 10 of the Licensed Warehouse and Fire Brigade Act, I of 1893, and are levied at 10 per cent. of the annual valuation of warehouses, subject to a maximum of Rs. 1,500 per warehouse per annum, and the income thus derived is credited to the Fire Brigade Fund and deducted from the amount required from the municipalities concerned.

During the year 1932-33, 40 per cent. of the contribution required from the Calcutta Municipality was derived from this source, leaving 60 per cent. only to be contributed from the rates. The contribution from the Calcutta Municipality to the Fire Brigade Fund in 1932-33 was Rs. 3,31,617. A similar percentage approximately applies to the Howrah Municipality, which contributed Rs. 45,000 in 1932-33. Rs. 2,016 were received in fees for attending fires outside the jurisdiction of the Calcutta Fire Brigade.

I am glad to be able to report that increased income has been derived from taxation under the above Act.

Fires, etc.—The total number of calls for fires or supposed fires was 534, being a decrease of 43 as compared with the previous year and a decrease of 106 as compared with the average of the past ten years. The actual number of calls for fires was 437, which shows a decrease of 3 as compared with the previous year, and the number of fires classed as serious (*i.e.*, over Rs. 20,000 damage per fire—see Appendix III) was 18 against 16 in the previous year.

The following statement shows the hours when the calls were received:—

Midnight	to 1 a.m.	19
1	to 2 a.m.	17
2	to 3 a.m.	13
3	to 4 a.m.	25
4	to 5 a.m.	16
5	to 6 a.m.	8
6	to 7 a.m.	15
7	to 8 a.m.	12
8	to 9 a.m.	19
9	to 10 a.m.	18
10	to 11 a.m.	22
11	to noon	22
Noon	to 1 p.m.	27
1	to 2 p.m.	26
2	to 3 p.m.	22
3	to 4 p.m.	18
4	to 5 p.m.	28
5	to 6 p.m.	24
6	to 7 p.m.	35
7	to 8 p.m.	45
8	to 9 p.m.	31
9	to 10 p.m.	24
10	to 11 p.m.	20
11	to midnight	18
	Total	534

I am pleased to record that the number of wilful false alarms made by the public from street fire alarms have immensely decreased. This year 48 alarms of this nature were received, which shows a decrease as compared with 72 in 1932-33 and an average of 88 during the past ten years.

Regarding false alarms of fire by private telephones I am glad to report that very little trouble occurs in this connection and the number is negligible. This is due to the much appreciated action of the Bengal Telephone Company in disconnecting subscribers who permit their instrument to be used for such purposes, either knowingly or unknowingly; otherwise there is no doubt the number of false alarms from this source would have been much greater. Five false alarms of this nature were received during the year under review against three in the previous year.

Seventeen false alarms were due to electrical defects in the street fire alarm system as compared with 34 during the previous year. The number of false alarms either accidental or given with good intent is 6 (19 in 1932-33).

The calls were classified as follows:—

Fires	437	(440)
False alarms, wilful from street fire alarms	48	(72)
False alarms, due to electrical defects ..	17	(34)
False alarms, given with good intent or accidental	6	(19)
False alarms, given from private telephone	5	(3)
False alarms, due to lightning ..	3	(2)
Special service (buildings collapsed, etc.)	18	(7)
	534	(577)

(The figures in brackets refer to the previous year.)

On 121 days	1 fire or supposed fire occurred ..		121
On 78 „	2 fires or supposed fire occurred ..		156
On 46 „	3	ditto ..	138
On 19 „	4	ditto ..	76
On 4 „	5	ditto ..	20
On 1 day	7	ditto ..	7
On 2 days	8	ditto ..	16
			534

The actual number of calls received during the year was 774 as compared with 839 during the previous year. These figures include instances where more than one call was received for the same fire, and are given for the purpose of classifying and comparing the means by which calls for fires, etc., are given.

These calls were transmitted to the Fire Brigade as follows:—

By private telephones, 471 (473 in 1932-33); by street fire alarms, 264 (326 in 1932-33); by messengers giving information at fire stations, 35 (28 in 1932-33); by direct fire telephones from theatres, cinemas, public buildings, etc., 3 (9 in 1932-33); by firemen on "Lookout" duty, 1 (3 in 1932-33).

Regarding the calls for actual fires in 145 cases the first information was transmitted to the Fire Brigade by means of street fire alarms, in 262 cases by private telephones, in 30 cases by messengers.

Means by which fires were extinguished.—In 255 cases fires were extinguished by first-aid machines, chemical fire extinguishers, buckets of water by firemen, or by occupiers before the arrival of the Fire Brigade; in 69 cases by 1 motor fire engine; in 29 cases by cutting or disconnecting electric fuses; in 18 cases by 2 motor fire engines; in 30 cases by the application of sand; in 6 cases by hydrants; in 8 cases by 3 motor fire engines; in 1 case by 1 motor fire engine and fire float; in 2 cases by 4 motor fire engines; in 1 case by 5 motor fire engines; in 2 cases by 3 motor fire engines and fire float; in 1 case by 4 motor fire engines and trailer pump; in 1 case by 4 motor fire engines and trailer pump and fire float; in 1 case by 5 motor fire engines, trailer pump and hydrants; in 2 cases by 5 motor fire engines, trailer pump and fire float; in 1 case by 6 motor fire engines and fire float; in 1 case by 6 motor fire engines and hydrants; in 1 case by 7 motor fire engines and trailer pump; in 1 case by 7 motor fire engines, hydrants and fire float; in 2 cases by 7 motor fire engines; in 1 case by 8 motor fire engines; in 1 case by 8 motor fire engines, trailer pump and fire float; in 1 case by 8 motor fire engines, hydrants and trailer pump; in 1 case by 8 motor fire engines, hydrants; in 1 case by 8 motor fire engines and trailer pump.

Fires in licensed premises.—Thirty-one fires occurred in premises licensed under the Licensed Warehouse and Fire Brigade Act, I of 1893, as compared with 38 during the previous year.

Fire loss.—The total damage caused by fire and water during the year has been estimated at Rs. 21,25,610 as against Rs. 19,51,570 of the previous year. The average total damage per annum for the past ten years is Rs. 10,73,990. The increase is due to a series of serious jute fires and ship fires, the causes of which could not be ascertained. The average damage per fire is Rs. 3,980 as compared with Rs. 3,382 for the previous year, and an average of Rs. 1,675 per fire for the past ten years.

The loss per fire is classified as follows:—

289	fires under	Rs. 100 ..	(287)
91	,, from	Rs. 100 to Rs. 1,000 ..	(87)
25	,, ,,	Rs. 1,000 to Rs. 5,000 ..	(35)
14	,, ,,	Rs. 5,000 to Rs. 20,000 ..	(14)
11	,, ,,	Rs. 20,000 to Rs. 1,00,000 ..	(12)
7	,, above	Rs. 1,00,000 ..	(5)
Total 437			(440)

(*Note.*—The figures in brackets refer to the previous year.)

The following summaries are given:—

Statement showing the number of fires or supposed fires occurring in each district protected by the Calcutta Fire Brigade and damage resulting therefrom—Appendix II.

Short report of fires of Rs. 20,000 and over—Appendix III.

Number of "Turns-out" from each fire station—Appendix IV.

Cause of fires and classes of buildings affected—Appendix V.

Short reports of fires involving loss of life or serious accidents—Appendix VI

Appliances.—The following is a list of the principal appliances now in commission by the Calcutta Fire Brigade:—

Twenty motor fire engines as follows:—

One motor pump, 600-800 gallons per minute capacity, fitted with scaling ladders, etc. (motor pump No. 2).

Five motor pumps, 500-700 gallons per minute capacity, fitted with telescopic fire escapes (55 feet), etc. (motor pumps Nos. 1, 15, 18, 19 and 20).

Two motor pumps, 450-550 gallons per minute capacity, fitted with telescopic ladders, first-aid cylinders and reels, scaling ladders, etc. (motor pumps Nos. 9 and 10).

Three motor pumps, 450 gallons per minute capacity, fitted with first-aid cylinder and trussed telescopic ladders (motor pumps Nos. 14, 11 and 8).

Three motor pumps, 400-500 gallons per minute capacity, fitted with first-aid cylinders, telescopic ladders and reels, etc. (motor pumps Nos. 5, 6 and 7).

Three motor pumps, 300 gallons per minute capacity, fitted with telescopic ladders, first-aid cylinders and reels, etc. (specially designed for use in narrow streets and congested area) (motor pumps Nos. 3, 12 and 16).

Two "G" type low-load line motor pumps, 250-300 gallons per minute capacity, fitted with 35 gallons "first-aid" cylinders and 30 feet trussed telescopic ladders (motor pumps Nos. 4 and 17).

One motor trailer pump, 250 gallons per minute capacity (specially designed for use in positions that cannot be reached by the ordinary type of motor fire engines).

One mechanically-operated 85 feet motor turntable ladder, 3 lorries, 1 motor car, 24 hook ladders, 56 scaling ladders, 13 smoke helmets and breathing apparatus, 63,900 feet of 2¾-inch unlined canvas hose, etc.

The appliances are distributed as follows:—

Headquarters.—Five motor fire engines (Nos. 2, 14, 17, 19 and 20), 1 motor trailer pump, 2 motor lorries, 1 motor car, 7 hook ladders, 22 scaling ladders, 6 smoke helmets, 4 telescopic ladders and 25,350 feet of 2¾-inch canvas hose.

Central Avenue.—Five motor fire engines (Nos. 1, 4, 12, 15 and 18), 1 motor turntable ladder, 8 scaling ladders, 5 smoke helmets, 1 telescopic ladder, 1 motor lorry, 13,050 feet of 2¾-inch canvas hose and 11 hook ladders.

Howrah.—Two motor fire engines (Nos. 5 and 11), 3 hook ladders, 7 scaling ladders, 2 telescopic ladders and 6,375 feet of 2¾-inch canvas hose.

Cossipore.—Two motor fire engines (Nos. 7 and 10), 3 telescopic ladders, 3 hook ladders, 10 scaling ladders and 7,350 feet of 2¾-inch canvas hose.

Garden Reach.—One motor fire engine (No. 8), 1 telescopic ladder, 4 scaling ladders, and 3,150 feet of 2¾-inch canvas hose.

Nimtolla.—One motor fire engine (No. 3), 1 telescopic ladder, 2 scaling ladders, 1 hose cart, 1 smoke helmet and 2,325 feet of 2¾-inch canvas hose.

Sibpore.—One motor fire engine (No. 9), 1 telescopic ladder, 4 scaling ladders and 2,400 feet of 2¾-inch canvas hose.

Kalighat.—Two motor fire engines (Nos. 6 and 16), 2 telescopic ladders, 1 smoke helmet and 3,900 feet of 2¾-inch canvas hose.

It is estimated that the motor fire appliances travelled 14,858 miles during the year to and from calls as compared with 15,916 miles in the previous year.

The following statement gives the number of times each motor fire engine has been turned out in response to calls:—

Motor Fire Engine No.	1	..	115
Ditto	2	..	26
Ditto	3	..	139
Ditto	4	..	279
Ditto	5	..	3
Ditto	6	..	Nil
Ditto	7	..	20
Ditto	8	..	84
Ditto	9	..	81
Ditto	10	..	64
Ditto	11	..	112
Ditto	12	..	52
Ditto	14	..	67
Ditto	15	..	107
Ditto	16	..	96
Ditto	17	..	343
Ditto	18	..	146
Ditto	19	..	148
Ditto	20	..	134
Fire float		..	14
Trailer motor pump		..	9

The total number of pumping hours at fires during the year was 1,574 hours 15 minutes as compared with 1,732 hours 30 minutes in the previous year.

Fire stations.—Appendix IV gives the number of times each fire station has been turned out in response to fire calls, together with monthly statements.

Staff.—The strength of the Brigade during the year was 271 as detailed below:—

One Chief Officer, 1 Second Officer, 1 Chief Engineer, 5 Station Officers, 8 Engineers, 7 European firemen, 1 Warehouse Inspector, 3 clerks, 1 store-keeper, 3 telephone operators, 2 carpenters, 2 lathe-mechanics, 1 fitter, 1 blacksmith, 1 tinsmith, 10 Indian drivers, 1 head-tindal, 21 tindals, 178 khallasis and 13 menial employees.

The conduct and discipline of the staff throughout the year have been exemplary.

Fatalities and accidents.—Appendix VI gives short reports of fires and special occurrences involving loss of life or serious accidents.

The number of lives lost during the year under review is 8 as compared with 11 in the previous year.

Four persons were injured at fires as compared with 13 in the previous year.

I am again glad to report that no serious accidents occurred during training recruits, or at drill.

In all cases, where necessary, first-aid was rendered by the Fire Brigade and the injured persons conveyed to hospital by motor ambulances.

Water mains.—I am glad to mention that action is being taken to provide sluice valves, etc., on the mains used for fire fighting. Under the existing circumstances when it is necessary to repair mains or add fresh connection practically the whole of the water-supply system has to be closed down and improvised arrangements made to enable the Fire Brigade to deal with the situation. Although no serious fire occurred when the water-supply was not available the danger of fires taking a serious turn is ever present, and I would urge that more attention should be given for putting up additional sluice valves so that the water-supply need not be closed down for repairs, etc.

The Cossipore-Chitpore area bounds with extremely serious fire risks, mostly consisting of jute warehouses and presses. Water has to be obtained from tanks or ponds (many of which are replenished by rainfall only) so at every fire motor pumps have to be utilised, as otherwise no water under pressure is available. This necessarily means some delay in getting to work, which would be obviated if water mains were installed. The nature of the risk involved is such as to render any delay whatever very dangerous, and there is no doubt that the installation of an efficient supply of water under pressure would enable the Fire Brigade to cope with many fires in their early stages and thus prevent them developing into serious fires.

For many years this has been pointed out in the Annual Report and also the fact that many of the tanks and ponds, which were formerly accessible, have now been filled up for sanitary reasons or to provide building sites.

A scheme for providing the necessary water-supply was discussed by the Corporation several years ago, but so far no action has been taken.

I would again stress that special attention be paid to the provision of a water-supply system for Cossipore-Chitpore area and immediate action taken.

Conditions in Howrah district are similar to those in the Cossipore-Chitpore areas. The Brigade has to rely on the river and tanks for an adequate supply of water. In Howrah also most of the available tanks are being filled in for sanitary reasons or to provide sites for building.

Although under a scheme approved of for the provision of hydrants in suitable positions in the mains supplying water to the overhead reservoirs some hydrants have been put up, I have to report that the risk of a great fire developing in the Howrah district is ever present, and it is hoped that the municipal authorities will considerably increase the number of these hydrants.

The fact that the fire float cannot approach certain portions of the Howrah river bank at low tide further complicates matters, and often the greatest difficulty has been experienced in obtaining sufficient water even to stop fires from spreading.

Fire float.—The fire float (5,000 gallons per minute capacity) is stationed on the river opposite the Prinsep's Ghat. During the year under review it has responded to 14 calls as compared with 12 calls in the previous year.

Street fire alarms, telephone and electrical communication.—I am pleased to record appreciation of the work done by the Bengal Telephone Company, and the thanks of the Brigade are due to every member of that Company. The telephone operators have been very efficient in their duties and all necessary repairs to fire alarms, telephones, etc., have been carried out without delay.

The street fire alarm system, comprising some 150 points, is maintained by the Bengal Telephone Company in a highly creditable manner.

The number of false alarms due to electrical defects in this system is 17 for the year under review as compared with 34 in the previous year.

Inspection department.—The majority of theatres, cinemas and other places of public amusement with few exceptions have no serious fire risks. The work of inspecting these premises is carried out by a Corporation official, but before licenses are granted by the Corporation they are inspected by a Fire Brigade Officer in regard to fire precautions and other matters relating to public safety.

There were no serious fires during the year in theatres, cinemas or places of public amusement.

In connection with the Licensed Warehouse and Fire Brigade Act, I of 1893, 6,564 inspections of warehouses have been made during the year. Six hundred and twenty-three applications and complaints have been attended to and disposed of. Two hundred and thirty-six

prosecutions were made under section 14 of Act I of 1893, which resulted in 197 persons being fined, the fines aggregating in all Rs. 997. Eleven persons were warned and discharged, 2 persons acquitted, 17 cases were withdrawn and 9 cases were filed owing to their being no trace of the parties concerned.

General.—The Calcutta Fire Brigade protects the city of Calcutta and the Municipality of Howrah, and may attend fires outside the boundaries of the above, but not exceeding a radius of 6 miles from Fire Brigade headquarters, provided appliances can be spared, and on payment of a prescribed fee. The total area protected is approximately 120 square miles comprising a population of over 2,000,000 persons.

The Fire Brigade headquarters is stationed in a portion of the Samavaya Mansions, rented for the purpose. The place is extremely congested and unsuitable for the purpose of the Fire Brigade. There is no drill yard, drill tower, or drying tower and the workshop accommodation is extremely limited.

A proposal for construction of an up-to-date Fire Brigade headquarters on the "Free School" site at an estimated amount of Rs. 6,60,000 has been submitted to the municipalities concerned and Government, and it is hoped that the matter will receive due consideration so that the Fire Brigade may have headquarters of their own. It may be noted that the total rent paid up to date amounts to Rs. 5,98,000.

On 2nd January 1934, a Fire Brigade Exhibition and Tournament was held at the Central Avenue Fire Station. Their Excellencies the Viceroy and the Countess of Willingdon honoured the Fire Brigade by their presence and presented Long Service Medals to Station Officers Tucker and Fraser.

APPENDIX

Statement showing Receipts and Expenditure

The year opened with a balance of Rs. 15,083-1-2 and the receipts amounted balance of Rs. 40,118-0-5 at

Abstract of Receipts and Disbursements of the Fire Brigade

Receipts.	Budget estimate for 1933-34.	Actual receipts for 1933-34.	Increase.	Decrease.
	Rs.	Rs. A. P.	Rs. A. P.	Rs. A. P.
Balance at the beginning of the year.	..	15,083 1 2	..	..
Proportionate cost payable by—				
Corporation of Calcutta	3,55,288	3,55,288 0 0	..	..
Howrah Municipality	57,837	66,821 0 0	8,984 0 0	..
Total ..	4,13,125	4,22,109 0 0	8,984 0 0	..
Fees under fireworks ..	60	70 0 0	10 0 0	..
Fees under Petroleum Act	6,000	6,848 0 0	848 0 0	..
Total ..	6,060	6,918 0 0	858 0 0	..
Sale-proceeds of unserviceable stores.	500	217 0 0	..	283 0 0
Miscellaneous ..	1,000	2,070 3 0	1,070 3 0	..
Total ..	1,500	2,287 3 0	1,070 3 0	283 0 0
Grand Total ..	4,20,685	4,46,397 4 2	10,912 3 0	283 0 0

Payment by

Corporation of Calcutta ..

Howrah Municipality ..

Total ..

of the Fire Brigade for 1933-34.

to Rs. 4,31,314-3. The total expenditure was Rs. 4,06,279-3-9 leaving a the close of the year.

Fund for the year ending 31st March 1934.

Payments.	Budget estimate for 1933-34.	Actual charges for 1933-34.	Increase.	Decrease.
	Rs.	Rs. A. P.	Rs. A. P.	Rs. A. P.
Establishment ..	2,06,056	1,94,149 3 0	..	11,906 13 0
Contingencies ..	2,06,030	2,00,190 0 9	..	5,839 15 3
Other charges ..	15,682	11,940 0 0	..	3,742 0 0
	4,27,768	4,06,279 3 9	..	21,488 12 3
Opening balance ..	..	40,118 0 5	..	..
Grand Total ..	..	4,46,397 4 2	..	..

Municipalities.

Per cent.	Rs.
86	3,55,288
14	57,837
	4,13,125

APPENDIX II.

Statement showing the number of fires, or supposed fires, occurring in each district protected by the Calcutta Fire Brigade and the damage resulting therefrom.

Months.	Calcutta.		Howrah.		Docks, river and canals.		Not included in the foregoing but within a radius of six miles from Fire Brigade Head-quarters.		Total.	
	Fires.	Damage.	Fires.	Damage.	Fires.	Damage.	Fires.	Damage.	Fires.	Damage.
1933.		Rs.		Rs.		Rs.		Rs.		Rs.
April ..	37	47,595	6	82,740	1	..	..	..	43	1,30,335
May ..	36	96,660	5	46,005	..	..	1	2,000	42	97,070
June ..	34	34,110	3	10	2	1,25,100	..	..	39	1,59,220
July ..	29	9,145	5	215	..	..	..	..	34	9,360
August ..	28	46,345	5	60	..	..	..	..	33	46,405
September	38	1,525	1	20	..	..	..	..	39	1,545
October	52	8,150	6	485	1	1,000	..	..	59	9,635
November	39	2,19,260	4	250	1	2,50,000	..	..	44	4,69,510
December	27	5,29,935	7	7,975	2	10,005	1	20,000	37	5,67,915
1934.										
January	37	1,22,515	5	605	..	..	..	..	42	1,23,120
February	43	78,585	4	330	..	..	..	..	47	78,915
March ..	62	2,81,570	13	1,51,010	..	..	..	..	75	4,32,580
Total	462	14,27,800	64	2,80,705	6	3,86,105	2	22,000	534	21,25,610

APPENDIX III.

Short report of fires of Rs, 20,000 damage and upwards during 1933-34.

Date.	Time of call.	Address.	Nature of premises.	Extinguished by—	Remarks.
1933.					
10th April	10-33 a.m.	Ghoosury Road, Sree Hanuman Jute Mill.	Jute Press	8 motor fire engines and hydrants (in all 25 jets).	A single-storied brick-built warehouse with corrugated iron roof, 100′ × 60′, containing about 14,000 maunds of loose jute. Contents damaged by fire and building slightly damaged.
30th April	3-22 p.m.	62, Monoharpukur Road.	Celluloid Factory.	2 motor fire engines and hydrants (in all 3 jets).	Celluloid factory and warehouse in a corrugated iron building. Machines and contents badly damaged and corrugated iron building damaged.
9th May	4-22 p.m.	Ghoosury Road, Sree Hanuman Jute Mill.	Jute Press	7 motor fire engines and hydrants (in all 29 jets).	A single-storied brick-built warehouse with corrugated iron roof, 45′ × 20′ × 15′, containing about 7,000 maunds of kutcha jute. Contents damaged and building slightly damaged.
11th June	5 p.m.	22 Berth—Kidderpore Docks, ss. "Maimyo."	Ship	6 motor fire engines, fire float and hydrants (in all 30 jets).	Ship laden with jute and other cargo. About 2,700 bales of jute in the twin deck below the bridge space badly damaged and ship slightly damaged.
20th June	3-52 a.m.	Hooghly Press, Chitpur Ghat Lane.	Jute Press	8 motor fire engines and hydrants.	A large brick-built single-storied warehouse containing about 8,000 maunds of jute. Building slightly damaged and contents severely damaged.
14th Aug.	1-5 a.m.	5, Chaulputty Road.	Shop	4 motor fire engines (in all 19 jets).	Four corrugated iron sheds with wooden beams containing various spices. Building and contents badly damaged.
25th Nov.	1-48 p.m.	4, Gun Foundry Road.	Jute Press	6 motor fire engines and fire float (in all 26 jets).	A large two-storied brick-built warehouse containing about 25,000 maunds of jute. Contents and building slightly damaged.
27th Nov.	5-11 p.m.	Suraj Press, 1-4, Gun Foundry Road.	Ditto ..	9 motor fire engines (in all 30 jets).	A large two-storied brick-built warehouse containing about 16,000 maunds of loose baled jute. Contents damaged by fire.
30th Nov.	6-24 a.m.	Ditto ..	Ditto ..	8 motor fire engines (in all 23 jets).	A single-storied brick-built warehouse containing about 7,000 maunds of loose jute. Building and contents damaged.
30th Nov.	11-10 p.m.	SS. "Dara"	Ship ..	5 motor fire engines and fire float (in all 10 jets).	A 5,000-ton steamer laden with 3,663 bales of jute and 4,673 bags of linseed. Cargo and ship badly damaged.
11th Dec.	4-48 p.m.	New India Jute Press, Gun Foundry Road.	Jute Press	7 motor fire engines (in all 25 jets).	A large two-storied brick-built warehouse containing about 6,000 pucca bales and 2,000 maunds loose jute. Roof of building and jute badly damaged.

APPENDIX III—*concluded.*

Date.	Time of call.	Address.	Nature of premises.	Extinguished by—	Remarks.
1933.					
18th Dec.	9-35 a.m.	Sun Jute Press	Jute Press	6 motor fire engines and hydrants (in all 30 jets).	A large two-storied brick-built warehouse with wooden floor, measuring about 120′ × 30′, containing about 25,000 maunds of loose jute and 80 pucca bales of jute. Contents and building badly damaged.
22nd Dec.	1-52 a.m.	Tollygunge Circular Road.	Rice Mill	3 motor fire engines (in all 5 jets).	Corrugated iron sheds containing 1,700 maunds rice and 400 maunds paddy. Fifty maunds of rice damaged.
29th Dec.	12-3 p.m.	Union Jute Press, Nawab Dilarjung Road.	Jute Press	9 motor fire engines and fire float (in all 40 jets).	A large two-storied brick-built warehouse, measuring about 150′ × 50′, containing 739 bales of cotton, 33 bales of hemp and large quantity of pucca bales and loose jute. Contents and building badly damaged.
1934.					
10th Jan.	1-40 p.m.	Camperdown Jute Press, Rustomjee Parsee Road.	Ditto ..	7 motor fire engines and fire float (in all 40 jets).	A large two-storied brick-built warehouse. Contents and building severely damaged.
4th Feb.	3-38 p.m.	Union Jute Press, Nawab Dilarjung Road.	Ditto ..	6 motor fire engines and fire float (in all 32 jets).	A large two-storied brick-built warehouse, 200′ × 30′ with wooden floor, containing 2,000 maunds loose jute, and 25,000 maunds in kutcha baled jute. Contents and building badly damaged.
17th March	8-55 p.m.	Howrah Oil Mill, 109, Foreshore Road.	Oil Mill	7 motor fire engines (in all 10 jets).	A single-storied brick-built building, 30′ × 60′, containing machinery and 4,000 gallons linseed oil, 318 maunds cocoanut oil and 1,400 gunny bags. Building and contents badly damaged.
29th March	12-0 p.m.	Suraj Jute Press, Gun Foundry Road.	Jute Press	9 motor fire engines and hydrants (in all 42 jets).	A large two-storied brick-built building containing 12,000 maunds of jute in pucca bale and 3,000 maunds loose jute. Building badly damaged and jute partly damaged.

APPENDIX IV.

Statement showing the number of times each fire station has turned out in response to fire calls.

Month.	Stations.									
	Headquarters.	Central Avenue.	Nimtolla.	Kalighat.	Garden Reach.	Howrah.	Cossipore.	Sibpur.	Fire float.	Total.
1933.										
April ..	36	29	8	12	7	7	1	7	3	110
May ..	37	31	14	8	4	7	4	7	1	113
June ..	31	26	7	9	9	3	5	2	2	94
July ..	18	29	8	3	3	5	3	4	..	73
August ..	24	28	10	4	3	5	1	5	..	80
September ..	32	32	12	7	5	1	3	1	..	93
October ..	47	46	21	8	8	6	5	6	1	148
November	34	31	12	9	9	4	5	4	4	112
December	30	30	12	7	2	8	8	8	2	107
1934.										
January ..	28	37	20	4	3	5	13	5	1	116
February ..	37	33	13	12	9	4	7	4	1	120
March ..	53	61	25	12	9	12	14	10	..	196
Total ..	407	413	162	95	71	67	69	63	15	1,362

APPENDIX

Statement of supposed causes of fires and

	Naked lights in contact and sparks from fires, chulas, furnaces, etc.	Electric short circuits.	Not ascertained.	Smoking.	Tar, pitch, ghee, oil, etc., overboiling.	Fireworks.	Lamps exploding, left unattended and overturning.	Machinery overheating.	Back fires in carburettors.	Spontaneous combustion.	Gas escaping.	Petrol fumes in contact with naked lights.	Suicide by burning.
Dwellings	65	36	13	19	4	9	4	..	..	..	..	..	3
Shops	8	28	16	2	6	4	..	..	..	..	..	..	..
Motor cars, tramcars, etc.	1	9	3	..	..	1	..	..	16	..	..	1	..
Warehouses, presses, jute, etc.	..	..	20	1	..	..	..	2	..	..	..	..	..
Warehouse, general ..	6	5	10	1	..	1	..	..	..	1	..	..	..
Outhouses, stables, etc. ..	6	5	2	2	2	1	..	..	..	..	1	..	..
Garages	1	1	..	..	..	..	..	..	..	..	..	2	..
Hotels	..	..	1	..	1	..	..	..	..	..	..	..	..
Jute, straw, hay, etc., in transit	4	..	3	4	..	..	..	..	..	..	..	..	..
Offices, etc. ..	..	4	2	1	1	..	1	..	..	..	..	..	..
Electrical mains, junction boxes, etc. ..	1	6	..	..	..	..	..	..	..	..	..	..	..
Factories, Matches, Shellac, etc, ..	..	..	1	..	..	..	..	..	..	1	..	..	..
Ships, country boats, etc...	2	..	6	..	..	..	..	..	..	..	..	..	..
Gas mains ..	1	..	..	..	..	..	..	..	..	..	3	..	..
Workshops ..	1	1	3	..	1	1	..	1	..	..	..	..	..
Timber yards ..	..	1	..	..	..	..	..	..	..	..	..	..	..
Theatres, cinemas, circuses, exhibition, etc. ..	..	4	3	1	..	1	..	1	..	..	..	..	..
Printing presses ..	..	..	..	..	..	..	..	1	..	..	..	..	..
Rubbish ..	..	..	1	2	..	..	..	..	..	..	..	..	..
Petrol pumps ..	..	..	..	..	..	..	..	..	..	..	..	1	..
College, schools, etc. ..	..	1	..	..	..	..	..	..	..	..	..	..	..
Film stores, studios, etc. ..	..	..	1	..	..	..	..	..	..	..	..	..	..
Churches, mosques, temples, etc. ..	1	1	..	..	..	..	..	..	..	..	..	..	..
Street lamps ..	..	1	..	..	..	..	..	..	..	..	3	..	..
Electric Sign Board ..	..	1	..	..	..	..	..	..	..	..	..	..	..
Hospitals ..	..	1	..	..	..	..	..	..	..	..	..	..	..
Tar boiler ..	..	..	..	..	5	..	..	..	..	..	..	..	..
Laundry ..	1	..	..	1	..	..	..	..	..	..	..	..	..
Saw mills ..	1	..	..	..	..	..	..	..	..	..	..	..	..
Trees ..	..	..	1	..	..	..	..	..	..	..	..	..	..
Mills—oil, cotton, rice, etc.	..	..	3	..	..	..	..	1	..	..	..	..	..
Straw depot ..	1	..	2	1	..	..	..	..	..	..	..	..	..
Market ..	1	1	..	..	..	..	..	..	..	..	..	..	..
Flour mill ..	..	4	..	..	..	..	..	..	..	..	..	..	..
False alarm—wilful ..	..	..	..	..	..	..	..	..	..	..	..	..	..
False alarms with good intent and accidental ..	..	..	..	..	..	..	..	..	..	..	..	..	..
False alarms due to electrical defects ..	..	..	..	..	..	..	..	..	..	..	..	..	..
False alarms due to lightning	..	..	..	..	..	..	..	..	..	..	..	..	..
False alarms from private telephones ..	..	..	..	..	..	..	..	..	..	..	..	..	..
Special services ..	..	..	..	..	..	..	..	..	..	..	..	..	..
Total ..	101	113	91	35	20	18	5	6	16	2	7	4	3

V.

class of premises involved.

Supposed arson.	Playing with matches.	Sparks from locomotives.	Lightning.	Explosives.	Rubbish burning.	False alarms—wilful.	False alarms with good intent and accidental.	False alarms due to electrical defects.	False alarms due to lightning.	False alarms from private telephones.	Special services.	Total.
2	1											156
	1											65
1				1								31
												23
												26
												19
												4
		2										2
												13
												9
												7
												2
												3
												4
												8
												1
1												11
												1
	1				1							5
												1
												1
												1
												2
												4
												1
												1
												5
												2
												1
												12
1		3	1									5
												2
												4
						48						48
							6					6
								17				17
									3			3
										5		5
											18	18
5	3		1	1	1	48	6	17	3	5	18	534

APPENDIX VI.

Short report of fires, etc., involving loss of life or serious accidents during 1933-34.

Date.	Time of call.	Address.	Lives lost.	Persons injured.	Nature of premises.	Remarks.
1933.						
18th July ..	1-13 p.m.	Chowdhury-para Lane, Howrah.	1	1	Dwelling	House collapse. An Indian named K. C. Bhadhury extricated from the debris and sent to hospital. An old Bengali woman killed.
22nd Aug.	6-5 a.m.	82, Ahiritolla Street.	1	..	Ditto ..	House collapse. One Indian was buried under the debris and extricated. He was rendered first-aid and was sent to hospital by ambulance, where he died shortly after admission.
24th Sept.	12-23 a.m.	Wellington Square.	1	..	Exhibition	An Indian severely injured in trying to save some furniture from fire. First-aid rendered by St. John Ambulance Brigade and sent to hospital, where he died.
25th Sept.	6-3 p.m.	57-6, Raja Dinendra Street.	..	1	Dwelling	An Indian woman named Mrs. Mookerjie was burnt all over the body. First-aid was rendered by Fire Brigade and removed to hospital by motor ambulance.
12th Oct. ..	7-56 a.m.	3-1, Jhautollah Road.	1	..	Ditto ..	An Indian named Sk. Idoo badly burnt by the explosion. First-aid rendered by Fire Brigade and sent to hospital, where he died 24 hours after admission.
17th Oct. ..	7-40 a.m.	16, South Lane.	2	2	Ditto ..	A wall collapsed and buried two Indian children and two men. They were extricated. The children were found dead and the men injured. They were given first-aid by Fire Brigade and sent to hospital by motor ambulance.
1934.						
4th March	7-16 a.m.	4, Madan Chatterji Lane.	1	..	Ditto ..	An Indian woman named Roma, aged about 40 years, saturated her clothing with kerosine oil and ignited. First-aid was rendered by the Fire Brigade and the injured woman died the following day.
13th March	4-15 a.m.	19-1, Bonomali Chatterji Street.	1	..	Ditto ..	An Indian woman named Monorama Debi, aged about 30 years, saturated her clothing with kerosine oil and ignited. Badly burnt all over the body. Sent to hospital by motor ambulance, where she died shortly after admission.

Wholesale prices-current of food grains, gur, etc., in the undermentioned marts of Bengal for the second half of February 1935.

Marts.	Paddy local (best quality).			Paddy local (common quality).			Rice local (best quality).		
	Present return.	Next preceding return.	Corresponding return of last year.	Present return.	Next preceding return.	Corresponding return of last year.	Present return.	Next preceding return.	Corresponding return of last year.
1	2	3	4	5	6	7	8	9	10
	Rs. a. p.	Rs. a. p.	Rs. a. p.	Rs. a. p.	Rs. a. p.	Rs. a. p.	Rs. a. p.	Rs. a. p.	Rs. a. p.
Calcutta	2 8 0	2 8 0	2 4 0	2 4 0	2 4 0	2 0 0	5 12 0	5 12 0	5 8 0
Burdwan	2 0 0	2 0 0	1 9 0	1 14 0	1 14 0	1 6 0	4 8 0	4 8 0	3 8 0
Midnapore	2 4 0	2 5 0	1 10 0	1 12 0	1 15 0	1 8 0	4 4 0	4 4 0	3 6 0
Chittagong	1 12 0	1 12 0	1 8 0	1 8 0	1 8 0	1 5 0	4 10 0	4 10 0	4 8 0
Dacca	2 0 0	2 1 0	2 4 0	1 12 0	1 13 0	2 0 0	3 8 0	3 14 0	3 14 0
Pabna	2 0 0	2 0 0	2 0 0	1 14 0	1 14 0	1 13 0	4 8 0	4 8 0	3 12 0
Rangpur	1 12 0	1 12 0	2 4 0	1 8 0	1 8 0	1 14 0	4 2 0	4 2 0	5 0 0
Serajganj (Pabna)	..	..	..	..	..	..	..	..	..
Sarisabari (Mymensingh)	..	..	..	..	..	..	..	..	..
Narayanganj (Dacca)	..	..	..	..	..	..	..	..	..

Marts.	Rice local (common quality).			Wheat.			Raw cotton.		
	Present return.	Next preceding return.	Corresponding return of last year.	Present return.	Next preceding return.	Corresponding return of last year.	Present return.	Next preceding return.	Corresponding return of last year.
	11	12	13	14	15	16	17	18	19
	Rs. a. p.	Rs. a. p.	Rs. a. p.	Rs. a. p.	Rs. a. p.	Rs. a. p.	Rs. a. p.	Rs. a. p.	Rs. a. p.
Calcutta	4 8 0	4 8 0	4 0 0	3 4 0	3 7 0	3 2 0 to 3 4 0	17 4 0	16 12 0	15 8 0
Burdwan	3 8 0	3 8 0	2 0 0	..	..	..	..	..	..
Midnapore	3 0 0	3 8 6	2 8 0	..	..	..	..	..	..
Chittagong	3 8 0	3 8 0	3 8 0	..	..	..	..	..	..
Dacca	3 4 0	3 2 0	3 7 0	..	..	..	..	..	..
Pabna	3 2 0	3 2 0	3 4 0	..	..	..	..	..	..
Rangpur	3 6 0	3 4 0	3 8 0	..	..	..	..	..	..
Serajganj (Pabna)	..	..	..	..	..	..	..	..	..
Sarisabari (Mymensingh)	..	..	..	..	..	..	..	..	..
Narayanganj (Dacca)	..	..	..	..	..	..	..	..	..

Marts.	Coal.			Raw jute (weighted average).			*Gur* (sugarcane).		
	Present return.	Next preceding return.	Corresponding return of last year.	Present return.	Next preceding return.	Corresponding return of last year.	Present return.	Next preceding return.	Corresponding return of last year.
	20	21	22	23	24	25	26	27	28
	Rs. a. p.	Rs. a. p.	Rs. a. p.	Rs. a. p.	Rs. a. p.	Rs. a. p.	Rs. a. p.	Rs. p. a.	Rs. a. p.
Calcutta	0 6 6	0 6 6	0 6 6	4 14 0	5 1 0	4 7 3	4 8 0	4 8 0	3 12 0
Burdwan	..	..	..	..	..	..	5 0 0	5 0 0	4 4 0
Midnapore	..	..	..	..	..	..	4 8 0	4 8 0	3 8 0
Chittagong	..	..	..	..	..	..	6 4 0	7 12 0	5 0 0
Dacca	..	..	..	..	..	..	4 8 0	4 12 0	4 12 0
Pabna	..	..	..	..	..	..	4 0 0	4 0 0	3 8 0
Rangpur	..	..	..	..	..	..	4 2 0 to 5 0 0	4 2 0 to 5 0 0	3 4 0 to 3 8 0
Serajganj (Pabna)	..	..	..	4 2 0	4 2 0	3 11 0	..	..	..
Sarisabari (Mymensingh)	..	..	..	3 4 0 to 5 12 0	3 12 0 to 5 12 0	3 8 0 to 4 14 0	..	..	..
Narayanganj (Dacca)	..	..	..	3 8 3 to 5 12 3	4 0 0 to 4 12 0	3 14 0 to 4 8 0	..	..	..

Dacca, the 9th March 1935.

S. ABDULLAH, for *Director of Agriculture, Bengal.*

Prices-current (retail) of common rice and salt in the districts of Bengal for the second half of February 1935.

Districts and Marts.	Quantity per rupee in seers of eighty tolas.								
	Common rice.						Salt.		
	Average.			Cheapest.					
	Present return.	Next preceding return.	Corresponding return of last year.	Present return.	Next preceding return.	Corresponding return of last year.	Present return.	Next preceding return.	Corresponding return of last year.
	S. Ch.	S. Ch.	S. Ch.	S. Ch.	S. Ch.	S. Ch.	S. Ch.	S. Ch.	S. Ch.
Presidency Division.									
24-Parganas—									
1 Chetla Hat ..	10 15	10 15	12 8	12 13	12 13	13 5	17 13	17 13	16 0
2 Mogra Hat ..	11 14	12 5	13 14	12 13	13 5	14 8	16 0	16 0	15 4
3 Calcutta-Beliaghata	8 12	8 12	9 10	11 8	11 8	11 7	16 0	16 0	13 0
Nadia—									
4 Goari	10 0	10 0	(*n*)	13 0	13 0	13 8	14 0†	14 0†	13 0†
5 Ranaghat ..	9 4	9 4	13 0	12 8	12 8	(*n*)	14 0†	14 0†	13 0†
Murshidabad—									
6 Berhampore ..	10 0	10 0	15 0	11 0	11 0	16 0	14 0*	14 0*	14 0*
7 Kandi	11 8	12 0	16 8	12 0	12 8	18 0	14 0	14 0	14 8
8 Jangipur ..	10 8	11 0	14 8	11 8	11 8	16 0	15 0	15 0	15 0
Jessore—									
9 Sadar	12 0	12 0	13 0	14 0	14 0	13 8	15 0†	15 0†	14 0* 15 0
10 Bongaon ..	10 0	10 0	11 0	12 8	12 8	13 0	14 8 13 0*	14 8 13 0*	13 8 12 8*
Khulna—									
11 Sadar	12 4	12 4	11 0	13 0	13 0	14 0	16 0 15 0*	13 0†	13 0†
12 Bagerhat ..	12 0	12 0	12 0	12 8	12 8	13 0	14 0	14 0	13 8
Burdwan Division.									
Burdwan—									
13 Sadar	10 0	10 0	11 8	11 0	11 0	14 0	14 0†	14 0†	13 8 16 0*
14 Kalna	10 0	10 0	11 4	11 0	11 0	13 2	16 0	16 0†	16 0
Birbhum—									
15 Suri	11 8	10 0	16 0	12 0	11 4	18 0	14 0	14 0	13 0
16 Rampurhat ..	11 0	11 0	16 0	12 0	12 0	16 8	16 0	16 0	16 0
Bankura—									
17 Sadar	12 0	12 0	15 0	13 0	13 0	16 0	14 0	14 0	13 8†
18 Vishnupur ..	10 0	10 8	16 8	11 0	11 8	17 8	15 0	13 0	13 0

* Karkach. (*n*) Not reported.

N.B.—The prices of Karkach and Liverpool salt tally with each other in marts marked †.

Prices-current (retail) of common rice and salt in the districts of Bengal for the Second half of February 1935.

Districts and Marts.	Quantity per rupee in seers of eighty tolas.								
	Common rice.						Salt.		
	Average.			Cheapest.					
	Present return.	Next preceding return.	Corresponding return of last year.	Present return.	Next preceding return.	Corresponding return of last year.	Present return.	Next preceding return.	Corresponding return of last year.
	S. Ch.	S. Ch.	S. Ch.	S. Ch.	S. Ch.	S. Ch.	S. Ch.	S. Ch.	S. Ch.
BURDWAN DIVISION—*concld.*									
Midnapore—									
19 Sadar	9 8	9 10	14 0	11 0	11 11	15 0	14 0	14 0	14 8
20 Contai	14 0	13 0	16 0	16 0	15 0	17 0	11 0	10 8	32 0
Hooghly—									
21 Sadar	10 0	10 0	12 8	11 8	11 8	14 0	15 0	15 0	13 8
22 Arambagh ..	11 8	11 8	16 0	12 0	12 4	17 0	14 0 13 8*	14 0 13 8*	15 0 14 8*
Howrah—									
23 Sadar	10 0	11 0	13 0	12 8	12 0	14 8	16 0	16 0	15 0
24 Uluberia ..	11 8	11 8	12 0	13 8	13 8	14 8	16 0	16 0	14 8
RAJSHAHI DIVISION.									
Rajshahi—									
25 Rampur-Boalia ..	11 4	12 0	12 0	12 0	12 8	14 8	13 4†	13 4†	12 8†
26 Nator	11 4	11 4	(*n*)	13 8	12 0	11 4	12 0†	12 0†	9 12†
27 Dinajpur—Railbazar Hat.	13 2	12 8	13 3	13 12	13 12	14 6	13 0†	13 0†	13 5†
28 Jalpaiguri—Sadar ..	11 0	12 0	10 8	13 0	14 0	13 0	13 0	13 0	13 0
Darjeeling—									
29 Sadar	9 8	9 8	9 0	10 0	10 0	11 0	10 8 10 0*	10 8 10 0*	10 0 8 0*
30 Siliguri ..	12 0	12 0	12 0	13 8	13 8	13 6	12 0†	12 0†	12 0†
Rangpur—									
31 Sadar	12 15	12 15	14 10	12 15	12 15	14 10	13 0	13 0	12 8
32 Nilphamari ..	10 0	10 0	(*n*)	10 8 (*a*) 12 0	10 8 (*a*) 12 0	13 0	12 8	12 8	12 8*
33 Bogra—Sadar ..	13 14	13 6	12 9	14 4	13 14	13 0	14 2	14 2	13 5
Pabna—									
34 Sadar	10 0	10 0	12 0	11 8	11 8	13 0	13 0†	13 0†	12 8†
35 Serajganj ..	11 0	11 0	11 8	11 8	11 8	12 12	16 0 15 0*	16 0 15 0*	16 0 15 0*
Malda—									
36 Sadar	12 8	12 0	13 0	13 0	13 0	14 0	14 8 14 0*	14 8 14 0*	12 8 12 0*
37 Balia—Nawabganj	13 14	12 8	15 0	14 4	13 0	17 8	15 0 14 8*	14 12 14 0*	13 8 13 0*

*Karkach. (*n*) Not reported.

N. B.—The prices of Karkach and Liverpool salt tally with each other in marts marked †.

(*a*) (New).

Prices-current (retail) of common rice and salt in the districts of Bengal for the second half of February 1935.

Districts and Marts.	Quantity per rupee in seers of eighty tolas.								
	Common rice.						Salt.		
	Average.			Cheapest.					
	Present return.	Next preceding return.	Corresponding return of last year.	Present return.	Next preceding return.	Corresponding return of last year.	Present return.	Next preceding return.	Corresponding return of last year.
	S. Ch.	S. Ch.	S. Ch.	S. Ch.	S. Ch.	S. Ch.	S. Ch.	S. Ch.	S. Ch.
Dacca Division.									
Dacca—									
38 Sadar	12 0	12 0	11 8	13 0	13 0	13 4	13 12†	13 8†	13 5 14 0*
39 Mirkadim ..	11 8	11 8	13 8	12 0	12 8	(n)	15 0*	15 0*	13 4*
Mymensingh—									
40 Nasirabad ..	11 0	12 0	10 8	13 0	13 0	12 0	13 0*	12 0*	12 0*
41 Netrakona ..	11 12	12 8	(n)	12 8	13 4	11 0	13 4 12 8*	13 4 12 8*	14 8 12 8*
Faridpur—									
42 Sadar ..	12 8	12 8	11 5	14 0	15 0	12 0	12 0	12 0	12 8
43 Rajbari ..	10 0	10 0	11 0	12 0	12 0	13 0	12 0	12 0	12 0
Bakarganj—									
44 Barisal ..	12 0	12 0	12 8	13 0	13 0	13 8	16 0 15 0*	16 0 15 0*	14 0 13 8*
45 Pirojpur ..	11 8	11 8	12 0	11 10	11 10	12 4	11 0†	11 0†	11 0†
Chittagong Division.									
Tippera—									
46 Comilla ..	12 5	12 5	11 7	13 5	13 5	12 5	12 13 10 10*	12 13 10 10*	10 10†
47 Chandpur ..	12 8	12 8	11 4	13 5	13 5	12 8	13 5	13 5	13 5
Noakhali—									
48 Kalitara Hat ..	12 0	9 8	11 0	14 0	13 0	12 0	13 0 10 0*	13 0 10 0*	13 8 12 0*
49 Feni Hat ..	12 12	12 12	13 0	14 0	14 0	14 0	13 0 10 0*	13 0 10 0*	14 0 10 0*
Chittagong—									
50 Sadar	11 0	11 0	10 0	12 0	12 0	13 8	11 0	11 0	14 0
51 Cox's Bazar ..	11 0	11 0	13 0	12 0	12 0	14 0	11 0	11 0	13 0
52 Chittagong Hill Tracts —Rangamati ..	14 0	14 0	15 0	17 0	17 0	16 0	13 0 8 0*	13 0 8 0*	6 8* 13 0

* Karkach. (n) Not reported.

N. B.—The prices of Karkach and Liverpool salt tally with each other in marts marked †.

Dacca, the 9th March 1935. S. ABDULLAH, for *Director of Agriculture, Bengal.*

DISTRICT REPORTS ON WEATHER AND CROPS.

For the week ending on the 6th March 1935.

Summary.—During the week light to moderate rain fell over the greater part of the Presidency. Preparatory tillage for autumn crops and harvesting of spring crops are progressing. The standing crops are generally reported to be satisfactory. During the week ending Saturday, the 2nd March 1935, 3,975 persons attended different relief centres and 764 persons received gratuitous relief in the distressed areas of Murshidabad. In Birbhum and Bankura, 6,099 and 771 persons, respectively, were employed on test relief works on Saturday, the 2nd March 1935. The average price of common rice for the province has fallen by about 1·20 per cent. as compared with that of the previous week.

Serial No.	District and subdivision.	Rainfall.	Price of common rice, in seers, per rupee.		Character of the weather, condition of crops, etc.
			This week.	Previous week.	
1	2	3	4	5	6
		Inches.			
1	24-Parganas ..	0·48	10 11/16	10 11/16	Weather seasonable. No damage to crops is reported. Fodder and water are sufficient. Export and import normal.
	Diamond Harbour	3·83	14	14	
	Barrackpore ..	Nil	10	10	
	Baraset ..	0·50	10	10	
	Basirhat ..	Nil	12 1/16	12 1/16	
2	Nadia ..	0·21	10	10	Weather seasonable. Import and export of rice normal. Harvesting of *rabi* crops and planting of sugarcane continue. Prospects of standing crops are fair. Fodder and water are sufficient.
	Kushtia ..	(*a*)	(*a*)	11½	
	Meherpur ..	0·53	10½	10½	
	Chuadanga ..	0·08	12	11	
	Ranaghat ..	1·58	9½	9½	
3	Murshidabad ..	Nil	10	10	Weather seasonable. Prospects of standing crops are not favourable in Kandi subdivision owing to deficient rainfall. Stock of rice, fodder and water are sufficient. No large export or import. Cattle-disease is reported from Kandi subdivision. Test relief works continue. 3,652 men, 215 women, 108 children attended relief centres during the week ending Saturday, the 2nd March 1935. Number of persons receiving gratuitous relief in the distressed areas was 188, 385 and 191 in Lalbagh, Kandi and Jangipur subdivisions, respectively.
	Lalbagh ..	Nil	12	11	
	Jangipur ..	0·08	11½	11½	
	Kandi ..	Nil	11½	11½	
4	Jessore ..	1·76	11	11	Weather seasonable. Prospects of standing crops are fair. No large export or import. Fodder and water are sufficient.
	Jhenidah ..	0·98	13	13	
	Magura ..	0·54	12	12	
	Narail ..	1·14	13	13	
	Bongaon ..	1·70	10	10	
5	Khulna ..	0·90	11	11	Weather seasonable. Its effects on crops are fair. Fodder and water are sufficient.
	Satkhira ..	0·04	12½	(*a*)	
	Bagerhat ..	0·22	12½	12	

(*a*) Not reported.

Serial No.	District and sub-division.	Rainfall.	Price of common rice, in seers, per rupee.		Character of the weather, condition of crops, etc.
			This week.	Previous week.	
1	2	3	4	5	6
		Inches.			
6	Burdwan ..	1·19	11	11	Weather seasonable. Condition of crops is not satisfactory. Fodder and water are sufficient.
	Asansol ..	0·20	10	10½	
	Katwa ..	Nil	11½	11½	
	Kalna ..	0·27	10	10	
7	Birbhum ..	0·20	12	12	Weather seasonable. Prospects of standing crops are fair. Fodder and water are sufficient. 6,099 men were employed on test relief works on Saturday, the 2nd March 1935.
	Rampurhat ..	Nil	11	11	
8	Bankura ..	1·48	11	11	Weather seasonable. Stock of rice, fodder and water are sufficient. Pressing of sugarcane is in full swing. No large export or import. Prospects of standing crops are fair. Cattle disease is reported from Vishnupur police-station. 771 persons were employed on test relief works opened by the district board, at Dhao bundh and Chamtiabad bundh on Saturday, the 2nd March 1935.
	Vishnupur ..	0·41	11	11½	
9	Midnapore ..	1·09	13	13	Weather little cloudy. Its effects on agricultural operations are fair. Stock of rice and fodder and water are sufficient.
	Contai ..	0·99	14	14	
	Tamluk ..	(n)	11½	11½	
	Ghatal ..	0·14	12½	12½	
	Jhargram ..	Nil	12½	12	
10	Hooghly ..	1·13	10	10	Weather seasonable. Fodder and water are sufficient.
	Serampore ..	0·06	10	10	
	Arambagh ..	0·70	11½	11½	
11	Howrah ..	0·35	10	10	Weather seasonable; its effects are favourable. Fodder and water are sufficient.
	Uluberia ..	Nil	11½	11½	
12	Rajshahi (Rampur Boalia).	0·00	11½	11½	Weather seasonable and favourable to standing crops. Harvesting of *rabi* crops continues; outturn is fair. Lands are being prepared for *bhadoi* paddy, jute and sugarcane. Fodder and water are sufficient.
	Naogaon ..	(n)	(n)	12½	
	Nator ..	Nil	11½	11½	
13	Dinajpur ..	Nil	12½	12½	Weather seasonable. Fodder and water are sufficient.
	Thakurgaon ..	Nil	13	13	
	Balurghat ..	Nil	13 1/16	13	
14	Jalpaiguri ..	Nil	13	13	Weather seasonable. No import or export. Fodder and water are sufficient.
	Alipur ..	Nil	13	13	

(n) Not reported.

Serial No.	District and subdivision.	Rainfall.	Price of common rice, in seers, per rupee.		Character of the weather, condition of crops, etc.
			This week.	Previous week.	
1	2	3	4	5	6
		Inches.			
15	Darjeeling ..	Nil	8	8	Weather fair. Fodder and water are sufficient. Cattle-disease exists in Kalimpong subdivision.
	Kurseong ..	0·03	10	8	
	Siliguri ..	Nil	13½	13½	
	Kalimpong ..	0·14	8	7½	
16	Rangpur ..	Nil	12	11	Weather seasonable. Prospects of standing crops are fair. Lands are under cultivation for *aus* crops. No large export or import. Fodder and water are sufficient. Cattle-disease is reported from Chilmari and Phulbari police-stations.
	Nilphamari ..	Nil	13	(*n*)	
	Kurigram ..	Nil	13	13	
	Gaibandha ..	Nil	12	12	
17	Bogra ..	Nil	14	14	Weather seasonable. Ploughing for the sowing of jute continues. Fodder and water are sufficient.
18	Pabna ..	0·40	11	11	Weather cloudy. Condition of standing crops is fair except that of *khesari* and *masur* pulses which have been slightly affected by the recent rain. Fodder and water are sufficient.
	Serajganj ..	Nil	11	11	
19	Malda ..	Nil	13½	13½	Weather seasonable. Prospects of standing crops are fair. Fodder and water are available.
20	Cooch-Behar ..	Nil	13 4/16	14 4/16	Weather seasonable. Preparation of lands for jute and autumn paddy and gathering of mustard seeds continue. Cutting of tobacco leaves is in progress. Prospects and condition of standing crops are fair. Fodder and water are sufficient. Cattle-disease is reported from Dinhata subdivision.
21	Dacca ..	0·95	12	11	Rainfall at North Sadar (Kapasia) nil. Weather seasonable and its effects on the crops are good. No large export or import. Prospects of crops are on the whole favourable. Fodder and water are available. Cattle-disease has subsided in Manikganj subdivision.
	Manikganj ..	0·90	11	11	
	Narayanganj ..	0·20	11½	11½	
	Munshiganj ..	0·20	11½	11½	

(*n*) Not reported.

Serial No.	District and sub-division.	Rainfall.	Price of common rice, in seers, per rupee.		Character of the weather, condition of crops, etc.
			This week.	Previous week.	
1	2	3	4	5	6
		Inches.			
22	Mymensingh ..	Nil	10½	10½	Weather seasonable. Condition of crops is fair. No damage is reported. Lands are being prepared for sowing of paddy and jute. Fodder and water are available.
	Jamalpur ..	Nil	12½	12½	
	Tangail ..	0·01	11	11	
	Netrakona ..	Nil	12	12	
	Kishorganj ..	0·05	11½	11½	
23	Faridpur ..	0·42	12½	12½	Weather seasonable. Condition of standing crops is fair. Fodder and water are sufficient. Cattle-disease in Gopalganj police-station has been reported to have subsided.
	Goalundo (Rajbari).	0·01	10	10	
	Madaripur ..	0·14	13	13	
	Gopalganj (*a*) ..	0·43	13	13	
24	Bakarganj (Barisal).	0·85	13	13	Weather seasonable. Prospects of standing crops are good. Fodder and water are sufficient.
	Pirojpur ..	2·11	11½	11½	
	Patuakhali ..	0·02	11	11	
	Dakshin Shabazpur (Bhola).	0·30	12	12	
25	Chittagong ..	Nil	12 13*	10 12*	Weather seasonable. Condition of standing *rabi* crop is fair. Fodder and water are sufficient. Panga salt sells at 13 seers per rupee at Sadar and 12 seers per rupee at Cox's Bazar.
	Cox's Bazar ..	Nil	13	13	
26	Tippera (Comilla)	0·74	13	13	Prospects of crops are fair.
	Brahmanbaria ..	0·08	11	11	
	Chandpur ..	0·97	13 1/16	13 1/16	
27	Noakhali ..	0·10	13	13	Weather seasonable and its effects on agricultural operations are good. Fodder and water are sufficient.
	Feni ..	0·11	13½	13½	
28	Chittagong Hill Tracts.	Nil	15	15	Weather seasonable. Its effects on agricultural operations are favourable. Fodder and water are sufficient.
29	Tripura State ..	1·09	12½	10½	Weather rainy. Condition of cattle is good. Fodder and water are sufficient. Cotton sells at Rs. 8 to Rs. 15 and jute at Rs. 2-8 to Rs. 4-4 per maund.

(*a*) The rainfall at Haridaspur, which is very near to Gopalganj, is shown here.

* Burma rice.

S. ABDULLAH, for *Director of Agriculture, Bengal.*

Dacca, the 11th March 1935.

DEPARTMENT OF AGRICULTURE, BENGAL.

Dacca, the 9th March 1935.

Monthly Weather and Crop Report of Bengal for February 1935.

I. *Character of the season.*—During the month under review, the rainfall was in excess of the normal in nineteen districts while in the rest of the Presidency it was below the average. The usual rainfall statement is appended.

II. *Progress of agricultural operations.*—Harvesting of spring crops was progressing under favourable conditions. Preparatory tillage for autumn crops continued.

III. *State of standing crops.*—The condition of standing crops was satisfactory on the whole.

IV. *Prospects and probable outturn.*—The prospects of standing crops and vegetables were reported to be generally fair. The outturn of wheat and spring oilseed crops was estimated at 88 and 83 per cent., respectively.

V. *Damage to standing crops.*—No appreciable damage to standing crops was reported from any part of the province.

VI. *Condition of agricultural stock.*—Condition of live-stock was generally fair. Stray cases of cattle-disease were, however, reported from eleven districts of the Presidency and from the State of Cooch-Behar.

VII. *Failure of pasturage and fodder.*—Insufficiency of fodder was reported from parts of Murshidabad.

VIII. *Prices of food-grains.*—During the second fortnight of the month, the retail prices of common rice of the cheapest quality rose in four districts, fell in four and remained stationary in the rest of the Presidency. The prices ranged from 10 seers per rupee at Darjeeling to 17 seers per rupee at the Chittagong Hill Tracts.

IX. *Condition of agricultural population.*—The condition of agricultural population was, on the whole, fair, except in parts of Murshidabad, Birbhum and Bankura, where distress continued.

S. ABDULLAH,
for *Director of Agriculture, Bengal.*

Statement showing the normal and actual rainfall in each district during February 1935.

Division.	District.	Normal district rainfall for the month of February.	Actual district rainfall for the month of February 1935.	Variation from the normal.
		Inches.	Inches.	Inches.
Presidency	24-Parganas	1·16	1·19	+0·03
	Nadia	0·98	1·29	+0·31
	Murshidabad	0·76	0·72	−0·04
	Jessore	1·21	1·29	+0·08
	Khulna	1·23	0·71	−0·52
Burdwan	Burdwan	1·09	1·13	+0·04
	Birbhum	0·73	1·05	+0·32
	Bankura	1·02	1·04	+0·02
	Midnapore	1·10	1·48	+0·38
	Hooghly	1·16	1·32	+0·16
	Howrah	1·29	1·97	+0·68
Rajshahi	Rajshahi	0·65	0·84	+0·19
	Dinajpur	0·68	1·08	+0·40
	Jalpaiguri	0·89	1·82	+0·93
	Darjeeling	1·00	1·61	+0·61
Rajshahi—*concld.*	Rangpur	0·64	0·49	−0·15
	Bogra	0·72	0·82	+0·10
	Pabna	0·79	1·22	+0·43
	Malda	0·79	0·59	−0·20
Dacca	Dacca	1·09	0·87	−0·22
	Mymensingh	0·81	0·55	−0·26
	Faridpur	1·12	0·74	−0·38
	Bakarganj	1·12	0·75	−0·37
Chittagong	Chittagong	0·68	0·73	+0·05
	Tippera	1·08	0·76	−0·32
	Noakhali	0·99	1·45	+0·46
	Chittagong Hill Tracts.	0·75	0·54	−0·21
Cooch Behar	..	0·71	1·19	+0·48
Tripura State	..	1·24	1·41	+0·17

Statement of weekly gauge readings on the river Ganges at Rampur Boalia for the week ending the 2nd March 1935.

Date.	Hour.	Height of surface above P. W. D. datum.	Height of surface above P. W. D. datum on the same date last year.	Remarks.
1935.				
24th February	7 a.m.	38·00	37·33	Zero of gauge referred to B. M. on Rajshahi College step ; value 64·73.
25th „	7 „	37·95	37·33	
26th „	7 „	37·95	37·23	
27th „	7 „	37·95	37·18	Value of 0 of the gauge= 34·55 P. W. D.
28th „	7 „	37·90	37·13	
1st March	7 „	37·90	37·03	
2nd „	7 „	37·85	36·93	

Highest recorded level on 26-8-1879=64·24.
Lowest recorded level on 24-4-1931=32·05.

J. MACKIE, *Subdivisional Officer*,
Irrigation Department, Rajshahi.

Rampur Boalia, the 2nd March 1935.

Statement showing the gauge readings at Dacca Waterworks Station on the river Buriganga for the week ending 2nd March 1935.

Date.	At highest water.		At lowest water.		Commencement of—		Remarks.	
	Time.	Reading.	Time.	Reading.	Ebb tide.	Flow tide.	7 a.m.	5 p.m.
1935.								
24th February ..	16-10	5·3	10-20	3·7	16-17	10-27	4·3	5·0
25th „ ..	17-0	5·1	11-5	3·5	17-8	11-13	4·2	5·1
26th „ ..	17-45	4·9	11·50	3-3	17-50	12-0	4·0	4·65
27th „ ..	.	..	12-35	3·0	..	12-45	3·85	3·9
28th „ ..	7-10	4·1	13-15	2·5	7-16	13-22	4·05	3·4
1st March ..	7-55	4·2	14-0	2·6	8-5	14-10	4·0	3·2
2nd „ ..	8-45	4·5	14-45	2·9	8-55	14-55	4·2	3·45

B. M. on settling tank 39·49 O. M. S. L. Zero is at O. M. S. L.

Notable high and low water levels of previous years.

		Taken at high tide.			Taken at low tide.
27th August	1906 ..	70·5	23rd February	1907 ..	51·06
5th September	1909 ..	66·86	13th „	1908 ..	51·06
10th August	1910 ..	69·86	12th March	1912 ..	51·06
1st „	1911 ..	68·46	6th „	1914 ..	50·60
13th „	1912 ..	67·16	22nd February	1915 ..	50·30
31st „	1915 ..	69·7	15th „	1916 ..	50·60
8th „	1916 ..	68·1	3rd March	1917 ..	51·0
12th „	1917 ..	67·1	21st February	1918 ..	51·40
13th „	1918 ..	69·12	26th „	1919 ..	56·4
2nd „	1919 ..	66·8	18th „	1920 ..	50·9
8th September	1920 ..	66·9	19th „	1921 ..	50·9
28th July	1921 ..	68·4	8th March	1922 ..	51·05
10th August	1922 ..	68·00	14th „	1923 ..	50·8
31st July	1923 ..	66·15	16th February	1924 ..	50·50
29th August	1924 ..	68·82	5th March	1925 ..	50·9
8th September	1925 ..	68·52	9th February	1926 ..	2·2
15th August	1926 ..	19·6	27th „	1927 ..	2·10
17th September	1927 ..	18·70	16th „	1928 ..	2·2
22nd August	1928 ..	20·0	21st „	1929 ..	2·0
13th July	1929 ..	17·8	24th „	1930 ..	2·3
12th September	1930 ..	18·65	28th „	1931 ..	2·2
16th August	1931 ..	21·7	18th „	1932 ..	1·8
6th September	1932 ..	18·5	6th „	1933 ..	2·10
7th „	1933 ..	17·80	2[illegible]th March	1934 ..	2·40
23rd August	1934 ..	19·35			

N.B.—Zero of the gauge at Dacca Waterworks prior to 11 a.m. on the 8th January 1926= −48·51 with reference to P. W. D. datum.

Zero of the gauge at Dacca Waterworks since 11 a.m. of the 8th January 1926=0·00 with reference to P. W. D. datum.

M. K. BHATTACHARJEE, *Executive Engineer,*
Khulna Division.

Khulna, the 9th March 1935.

HOWRAH MUNICIPALITY.

The 1st March 1935.

DECLARATION

Under rule 3 (3) of Schedule XVII of the Calcutta Municipal Act, 1923.

The Commissioners of the Howrah Municipality, in accordance with a resolution (128 (2)) passed at their ordinary general meeting held on the 20th January 1911, declare that two-storied buildings not exceeding 28 feet in height will be permitted without complying with the requirements of the other sub-rules of rule 3 of the said Schedule XVII in all streets in existence on the 14th August 1920 which are not less than 12 feet in width.

[ILLEGIBLE], *Secretary.*

Printed and published by the Superintendent, Government Printing, Bengal Government Press, Alipore, Bengal, on the 14th March 1935.

Registered No. C207.

No. 12 of 1935.

The Calcutta Gazette

Published by Authority

THURSDAY, MARCH 21, 1935.

CONTENTS:

	Page.
PART I.—Orders and Notifications by the Governor of Bengal, the Government of Bengal, the High Court, Government Treasury, etc.	569—582
PART IA.—Orders and Notifications by the Government of India republished for general information	53—56
PART IB.—Educational Notices ..	365—367
PART II.—Advertisements	363—386
PART III.—Acts of the Bengal Legislative Council—	
The Bengal Workmen's Protection Act, 1934	9—10
PART IV.—Bills introduced in the Bengal Legislative Council, Reports of Select Committees presented or to be presented to that Council, and Bills published before introduction in that Council—	
Report of the Select Committee on the Indian Stamp (Bengal Amendment) Bill, 1935, with the Bill embodying amendments recommended by the Committee	89—95
Report of the Select Committee on the Bengal Electricity Duty Bill, 1935, with the Bill embodying amendments recommended by the Committee	96—104
Report of the Select Committee on the Court-fees (Bengal Second Amendment) Bill, 1935, with the Bill embodying amendments recommended by the Committee	105—109
Report of the Select Committee on the Bengal Tobacco (Sales Licensing) Bill, 1935, with the Bill embodying amendments recommended by the Committee	110—124
Report of the Select Committee on the Bengal Amusements Tax (Amendment) Bill, 1935, with the Bill embodying amendments recommended by the Committee	125—128
PART V.—Acts of the Indian Legislature assented to by the Governor-General and Ordinances promulgated under section 72 of the Government of India Act ..	*Nil*
PART VI.—Bills introduced in the Council of State and Legislative Assembly, Reports of Select Committees presented to the Council and Assembly and Bills published under rule 18 of the Indian Legislative Rules—	
The Cinematograph (Amendment) Bill, 1935, with Statement of Objects and Reasons	25—27
SUPPLEMENT No. 12 :—	
Cotton Ginning and Pressing—Weekly gauge reading—Weekly Weather and Crop Report—Price-list (retail) of Staple Food-Crops of Bengal ..	385—394

PART I

Orders and Notifications by the Governor of Bengal, the Government of Bengal, the High Court, Government Treasury, etc.

Orders by the Government of Bengal.

No. 2946A.

Appointments and Transfers.

GENERAL.

Tippera.—No. 2686A.—11th March 1935.—Babu Gopendra Kumar Ghosh Chaudhuri, Deputy Magistrate and Deputy Collector, on leave, is posted to the headquarters station of the Tippera district.

POLICE.

Calcutta.—No. 2679A.—11th March 1935.—Mr. J. C. Farmer, I.P., Deputy Inspector-General of Police, on leave, is appointed to act as Inspector-General of Police, Bengal, during the absence, on leave, of Mr. T. J. A. Craig, C.I.E., I.P., or until further orders.

Bakarganj-Birbhum.—No. 2715A. — 12th March 1935.—Khan Bahadur Abdur Rashid Khan, Deputy Superintendent of Police, Bakarganj, is appointed to act, until further orders, as Superintendent of Police, Birbhum.

Birbhum-Rajshahi. — No. 2718A. — 12th March 1935.—Rai Satish Chandra Banarji Bahadur, O.B.E., officiating Superintendent of Police, Birbhum, is appointed temporarily to act as Superintendent of Police, Eastern Bengal and Assam Bengal Railways, Saidpur.

Bakarganj.—No. 2734A.—13th March 1935. —Khan Bahadur Abdur Rashid Khan, Deputy Superintendent of Police, on leave, is posted temporarily to the headquarters station of the Bakarganj district.

Calcutta.—No. 2735A.—13th March 1935. —Babu Bhujendra Nath Sarkar, Inspector of Police, Intelligence Branch, is appointed to act, until further orders, as Deputy Superintendent of Police and is posted to that Branch.

ECCLESIASTICAL.

Calcutta.—No. 2844A.—13th March 1935. —The Reverend F. Elliott, a Chaplain of the Additional Clergy Society, is appointed to be Chaplain of St. Peter's Church, Fort William, Calcutta, with effect from the 1st March 1935, or any subsequent date on which he may take over charge of his duties.

Leave.

GENERAL.

Midnapore.—No. 2694A.—11th March 1935. —Rai Sahib Abhay Charan Chatarji, Deputy Magistrate and Deputy Collector, Midnapore, is allowed leave on average pay up to the 12th June 1935, under rule 81(*b*) (*ii*) of the Fundamental Rules, with effect from the 15th March 1935, or any subsequent date on which he may avail himself of it.

No. 2765A. — 13th March 1935. — Babu Dhirendra Nath Khan, Sub-Deputy Collector, is allowed leave on average pay for fourteen days, under rule 81 (*b*) (*ii*) of the Fundamental Rules, in extension of the leave granted to him under the orders of the 25th January 1935.

POLICE.

Calcutta.—No. 2676A.—11th March 1935. —Mr. T. J. A. Craig, C.I.E., I.P., Inspector-General of Police, Bengal, is allowed leave for one year, seven months and nine days, viz., leave on average pay for five months and eight days, under rule 81(*b*) (*i*) of the Fundamental Rules, with effect from the 24th April 1935, and leave on half average pay for the remaining period, under rule 81(*d*) of those Rules.

Rajshahi.—No. 2703A.—12th March 1935. —Mr. J. E. Adams, I.P., Probationary Assistant Superintendent of Police, Police Training College, Sardah, Rajshahi, was allowed leave not due on half average pay for one day, viz., the 19th December 1934, under rule 81 (*c*) (*ii*) of the Fundamental Rules.

Rajshahi.—No. 2706A.—12th March 1935. —Mr. P. V. Wright, I.P., Probationary Assistant Superintendent of Police, Police Training College, Sardah, Rajshahi, was allowed leave not due on half average pay for one day, viz., the 19th December 1934, under rule 81 (*c*) (*ii*) of the Fundamental Rules.

Calcutta.—No. 2710A.—12th March 1935.— Mr. W. E. Duckfield, I.P., Deputy Commissioner of Police, Calcutta, is allowed leave on average pay for eight months, under rule 81(*b*) (*i*) of the Fundamental Rules, with effect from the 11th April 1935, or any subsequent date on which he may be relieved.

E. N. BLANDY,

Chief Secy. to the Govt. of Bengal (offg.).

NOTIFICATION.

No. 2823A.—13th March 1935.—Under rule IV (*1*), (*2*) and (*3*) of the Bengal Selection Board (Constitution and Functions) Rules, 1928, published in notification No. 3099A., dated the 22nd March 1928, the Government of Bengal are pleased to appoint the officers mentioned below as members of the said Board for a period of one year from the 1st April 1935:—

President.

The Member, Board of Revenue.

Members.

The Commissioner of the Presidency Division.

The President, Central Examination Committee.

The Director of Public Instruction, Bengal.

E. N. BLANDY,

Chief Secy. to the Govt. of Bengal (offg.).

POLITICAL DEPARTMENT.

Political.

NOTIFICATION.

No. 2941P.—15th March 1935.—Whereas it appeared to the District Magistrate of Chittagong that the letting off of bombs or fireworks in Chittagong was likely to cause obstruction to the authorities responsible for the preservation of the public tranquillity and whereas he issued an order, dated the 28th September 1932, under section 144 of the Code of Criminal Procedure, 1898, directing all persons to abstain from letting off any bombs or fireworks within the police-stations of Kotwali, Double Moorings and Panchalaish:

And whereas it appears to the Local Government that the conditions in Chittagong which led to the issue by the District Magistrate of the aforesaid order still continue and that the letting off of bombs or fireworks is likely to cause a danger to human life or safety:

Now, therefore, in exercise of the power conferred by section 144 (*6*) of the Code of Criminal Procedure, it is hereby directed that the said order shall remain in force for a further period of two months with effect from the 27th March 1935.

Jails.

NOTIFICATION.

Dacca.—No. 938P.J.—11th March 1935. — Mr. A. H. W. Leonard, Superintendent, Dacca Central Jail, is allowed leave for eight months, under the proviso to rule 81 (*b*) (*ii*) of the Fundamental Rules, with effect from the 1st April 1935, or any subsequent date on which he may be relieved.

E. N. BLANDY,

Chief Secy. to the Govt. of Bengal (offg.).

POLICE DEPARTMENT.

NOTIFICATION.

Burdwan.—No. 1499Pl.—13th March 1935. —In exercise of the power conferred by section 2 of the Bengal Public Gambling Act, 1867 (Bengal Act II of 1867), and in supersession of notification No. 5227Pl., dated the 3rd December 1926, published at page 1838 of Part I of the *Calcutta Gazette*, dated the 9th December 1926, the Governor in Council is pleased to extend all the sections of the said Act (except section 13 which already applies) to the whole of the police-stations Asansol, Kulti, Salanpur, Barabani, Jamuria, Ondal and Raniganj within the Asansol subdivision of the Burdwan district.

E. N. BLANDY,

Chief Secy. to the Govt. of Bengal (offg.).

JUDICIAL DEPARTMENT.

No. 2947A.

Powers.

Darjeeling.—No. 2771A.—13th March 1935. —In exercise of the power conferred by subsection (*1*) of section 5 of the Bengal Borstal Schools Act, 1928 (Bengal Act I of 1928), the Governor in Council is pleased to invest Mr. Basanta Kumar Mukharji, Deputy Magistrate, Darjeeling, with the powers necessary for carrying out the purpose of the said section.

E. N. BLANDY,

Chief Secy. to the Govt. of Bengal (offg.).

Appointments and Transfers.

Mymensingh. — No. 2403J.—12th March 1935.—Maulvi Amiruddin Sircar, officiating munsif, now employed as Stamp Inspector, Mymensingh, is appointed temporarily to act as a munsif in the same district, to be ordinarily stationed at Sadar, during the absence, on leave, of Babu Kali Narayan Bhattacharji.

Leave.

Murshidabad.—No. 2465J.—7th February 1935.—Babu Malati Nath Basu, munsif of Berhampore, in the district of Murshidabad, is allowed leave for the period from the 2nd April to the 30th December 1935, viz., leave on average pay for twenty-nine days, under rules 81(*b*) (*ii*) and 82(*b*) of the Fundamental Rules, and leave on half average pay for the remaining period, under rule 81(*d*) of those Rules.

Hooghly. — No. 2466J. — 19th February 1935.—Babu Surendra Nath Sen, No. II, munsif of Amta, in the district of Hooghly, is allowed leave on average pay for the period from the 19th February to the 12th April 1935, under rules 81(*b*) (*ii*) and 82(*b*) of the Fundamental Rules.

24-Parganas.—No. 2467J.—22nd February 1935.—Babu Jyotish Chandra Gupta, munsif of Baruipur, in the district of 24-Parganas, is allowed leave on average pay for two months, under rules 81(*b*) (*ii*) and 82(*b*) of the Fundamental Rules, with effect from the 11th March 1935.

NOTIFICATIONS.

Murshidabad.—No. 2362J. — 12th March 1935.—In exercise of the power conferred by section 65 of the Bengal Village Self-Government Act, 1919 (Bengal Act V of 1919), the Governor in Council is pleased to appoint the following members of the union boards mentioned below, to be, during their term of office as such members, union benches within the jurisdiction of the union boards of which they are, respectively, members for the purposes of that section :—

Kandi subdivision, Murshidabad district.

Bharatpur police-station.

Kagram-Talibpur union board.

Maulvi Mohammad Golam Mahboob.
Maulvi Mohammad Jiller Rahim.
Babu Mani Bhusan Chatarji.

Simulia-Banwaribad union board.

Babu Bhupendra Nath Mukharji.
Babu Gauri Prosad Mukharji.
Munshi Mohammad Abdul Mokid.

Kandi police-station.

Mahalandi union board.

Babu Indra Chandra Banarji.
Munshi Mohammad Furroque Hossain.
Babu Sundar Gopal Chandra.

Purundarpur union board.

Babu Sarat Chandra Trivedi.
Haji Munshi Shaikh Rahamatulla.
Munshi Shaikh Garibulla Mandal.

Khargram police-station.

Parulia union board.

Maulvi Mohammad Abul Kasem.
Babu Girindra Mohan Sinha.
Maulvi Ainal Haque.

Eroali union board.

Babu Kartick Chandra Ray Chaudhuri.
Babu Kali Pada Ray Chaudhuri.
Munshi Abdul Aziz.

2. This notification will take effect from the date of the first meeting of the reconstituted union boards at which a quorum is present.

Murshidabad.—No. 2363J. — 12th March 1935.—In exercise of the power conferred by section 73 of the Bengal Village Self-Government Act, 1919 (Bengal Act V of 1919), the Governor in Council is pleased to appoint the following members of the union boards mentioned below, to be, during their term of office as such members, union courts within the jurisdiction of the union boards of which they are, respectively, members for the purposes of that section :—

Bharatpur police-station.

Kagram-Talibpur union board.

Maulvi Mohammad Golam Mahboob.
Maulvi Mohammad Jiller Rahim.
Babu Mani Bhusan Chatarji.

Simulia-Banwaribad union board.

Babu Bhupendra Nath Mukharji.
Babu Gauri Prosad Mukharji.
Munshi Mohammad Abdul Mokid.

Kandi police-station.

Mahalandi union board.

Babu Indra Chandra Banarji.
Munshi Mohammad Furroque Hossain.
Babu Sundar Gopal Chandra.

Purundarpur union board.

Babu Sarat Chandra Trivedi.
Haji Munshi Shaikh Rahamatulla.
Munshi Shaikh Garibulla Mandal.

Khargram police-station.

Parulia union board.

Maulvi Mohammad Abul Kasem.
Babu Girindra Mohan Sinha.
Maulvi Ainal Haque.

Eroali union board.

Babu Kartick Chandra Ray Chaudhuri.
Babu Kali Pada Ray Chaudhuri.
Munshi Abdul Aziz.

2. This notification will take effect from the date of the first meeting of the reconstituted union boards at which a quorum is present.

Burdwan.—No. 2516J.—14th March 1935.—In exercise of the power conferred by section 65 of the Bengal Village Self-Government Act, 1919 (Bengal Act V of 1919), the Governor in Council is pleased to appoint Maulvi Obedar Rahaman, a member of the Eruar union board within the Bhatar police-station in the Sadar subdivision of the Burdwan district, to be, during his term of office as such member, a member of the union bench within the jurisdiction of the said union board for the purposes of that section, *vice* Maulvi Samsul Bari, deceased.

Burdwan.—No. 2517J.—14th March 1935.—In exercise of the power conferred by section 73 of the Bengal Village Self-Government Act, 1919 (Bengal Act V of 1919), the Governor in Council is pleased to appoint Maulvi Obedar Rahaman, a member of the Eruar union board within the Bhatar police-station in the Sadar subdivision of the Burdwan district, to be, during his term of office as such member, a member of the union court within the jurisdiction of the said union board for the purposes of that section, *vice* Maulvi Samsul Bari, deceased.

Bakarganj.—No. 2519J.—14th March 1935.—In exercise of the power conferred by section 73 of the Bengal Village Self-Government Act, 1919 (Bengal Act V of 1919), the Governor in Council is pleased to appoint Munshi Saijaddin Howladar, a member of Nailtala union board within the Nazirpur police-station in the Pirojpur subdivision of the Bakarganj district, to be, during his term of office as such member, a member of the union court within the jurisdiction of the said union board for the purposes of that section, *vice* Munshi Daliluddin Kazi, removed under section 12 (*1*) (*d*) of the Act.

Bakarganj.—No. 2520J —14th March 1935.—In exercise of the power conferred by section 65 of the Bengal Village Self-Government Act, 1919 (Bengal Act V of 1919), the Governor in Council is pleased to appoint Munshi Saijaddin Howladar, a member of Nailtala union board within the Nazirpur police-station in the Pirojpur subdivision of the Bakarganj district, to be, during his term of office as such member, a member of the union bench within the jurisdiction of the said union board for the purposes of that section, *vice* Munshi Daliluddin Kazi, removed under section 12 (*1*) (*d*) of the Act.

T. ROXBURGH,
Secy. to the Govt. of Bengal (offg.).

LOCAL SELF-GOVERNMENT DEPARTMENT.

NOTIFICATION.

Minister-in-charge: The Hon'ble Sir Bijoy Prasad Singh Roy, Kt.

No. 1982L. S.-G.—13th March 1935.—In exercise of the power conferred by section 16 of the Bengal Motor Vehicles Tax Act, 1932 (Bengal Act I of 1932), the Government of Bengal (Ministry of Local Self-Government) are pleased to exempt the Ford motor lorry fitted with closed van body used for Government publicity work from the payment of the tax under the said Act for the period during which it is so used.

Medical.

Minister-in-charge: The Hon'ble Sir Bijoy Prasad Singh Roy, Kt.

Calcutta.—No. 1096Medl. — 12th March 1935.—Dr. Satipati Goswami, House Physician, attached to the Out-door Medical Section, Medical College Hospitals, Calcutta, was granted "earned leave" for thirteen days, under rule 10 of the Bengal Services Revision of Leave Rules, 1934, with effect from the 10th January 1935.

G. S. DUTT,
Secy. to the Govt. of Bengal.

EDUCATION DEPARTMENT.

NOTIFICATION.

Calcutta. — No. 1047Edn. — 14th March 1935.—In accordance with section 2 of the St. Thomas' School Act, 1923 (Bengal Act XII of 1923), Mr. W. Hunter has been appointed to be a Governor of St. Thomas' School, Calcutta, *vice* Mr. H. F. Bateman, resigned.

H. R. WILKINSON,
Secy. to the Govt. of Bengal.

Orders by the Inspector-General of Registration, Bengal.

Dacca.—No. 103.—12th March 1935.—Babu Ratish Chandra Ray, Sub-Registrar of Barangail, in the district of Dacca, is allowed leave on average pay for one month, under rule 81 (*b*) (*ii*) of the Fundamental Rules, with effect from the 26th January 1935.

Dacca. — No. 104.—12th March 1935.—Maulvi Md. Jalaluddin, Sub-Registrar attached to Dacca, is appointed to act as Sub-Registrar of Barangail in the same district, with effect from the 28th January 1935, during the absence, on leave, of Babu Ratish Chandra Ray, Sub-Registrar, or until further orders.

S. AHMED,
Inspector-General of Regn., Bengal.

FINANCE DEPARTMENT.

Separate Revenue.

NOTIFICATIONS.

No. 169S.R.—5th March 1935.—In exercise of the powers conferred by the notification of the Government of India, Department of Finance and Commerce, No. 2112S.R., dated the 20th April 1903, and with reference to item No. 25(*2*) of the First Schedule to the Indian Tariff Act, 1934 (XXXII of 1934), the following rules are prescribed with the previous sanction of the Governor-General in Council to govern the remission of duty on salt issued for use in any process of manufacture in Bengal:—

Rules.

1. Every manufacturer wishing to be admitted to the concession shall make an application through the Collector of Customs to the Government of Bengal stating the process of manufacture in which he intends to use the salt. If he wishes the concession to extend to more than one factory or works, a separate application is required for each such factory or works.

2. If the application is sanctioned, the manufacturer shall forthwith execute and lodge with the Collector of Customs a memorandum in the form appended to these rules. He shall also pay to the Collector of Customs a fee of Rs. 100 a year to cover the cost of requisite inspections and other departmental expenses involved:

Provided that if a manufacturer is admitted to a concession both in regard to imported salt and also in regard to manufactured salt, not more than a single fee shall be charged for each factory or works.

3. (*1*) The manufacturer shall in the first instance provide himself with salt, for use in the process mentioned in his application to Government under rule 1, by purchase in the market, and shall at the close of each quarter submit to the Collector of Customs an application for a refund of duty on the salt used in the said process during the quarter.

(*2*) The application shall contain the following particulars:—

(*i*) the balance of salt in store at the beginning of the quarter,
(*ii*) the quantity of salt purchased during the quarter,
(*iii*) the quantity of salt used during the quarter and on which a refund of duty is applied for,
(*iv*) the balance of salt in store at the close of the quarter, and
(*v*) the quantity, weight and such other details as may be required of products manufactured during the quarter.

(*3*) The application shall also contain a declaration that the salt on which a refund of duty is applied for has been used *bona fide* in the process of manufacture and has not been used for any other purpose.

4. (*1*) The manufacturer shall provide and set apart for the storage of salt, purchased for use in the process of manufacture, a store-room securely constructed and with a strong door capable of being locked to the satisfaction of the Collector of Customs.

(*2*) Separate storage must be provided for salt manufactured in British India and for imported salt.

5. (*1*) The store-room shall not be opened except during daylight and by or in the presence of the store-keeper at the factory, and then only—

(*a*) for the receipt of salt into store;
(*b*) for the preparation by grinding and for the issue of salt required for purposes connected with the said process of manufacture; and
(*c*) for check by weighment or otherwise of the stock of salt by the officer deputed on behalf of Government for the purpose.

(*2*) The store-keeper, who shall be approved by the Collector of Customs, shall retain the key of the store-room in his own possession.

6. All spent lye or other useless refuse containing salt shall be effectually destroyed on or near the factory or works in such manner as the Collector of Customs may direct.

7. The factory or works may be entered upon and examined at any time by any officer authorised by the Collector of Customs, and due facilities for the same and for the inspection of the manufacturer's salt register, as well as for checking the stock of salt received, expended and in hand, shall be afforded by the manufacturer and all other persons employed by him.

8. (*1*) The register referred to in rule 7 shall be written up daily and signed by the manufacturer or his manager, and shall be in the form hereto annexed.

(*2*) Separate registers shall be maintained for salt manufactured in British India and for imported salt.

9. The manufacturer shall furnish the Collector of Customs with a monthly statement to be posted by the 10th of each following month, showing the opening balance of salt at the beginning of the month, the quantity purchased during the month, the quantity expended during the month, the balance at the close of the month and the quantity of products manufactured duing the month. The manufacturer's books showing the products manufactured shall be open for inspection at any time to the Collector of Customs or to any officer deputed by him.

10. On any breach of these rules by the manufacturer, or if it shall appear to the Collector of Customs that the concession is being in any manner abused, the Government may forthwith cancel the concession, and the manufacturer shall on demand refund all duty, the remission of which shall have been wrongfully claimed and sanctioned.

11. The Government of Bengal, Finance Department, notification No. 276S.R., dated the 29th January 1918, is hereby cancelled.

Form of Memorandum.

(*See* rule 2.)

I (We) in consideration of sanction being given to my (our) application for the remission of duty on salt used in the manufactures specified in my (our) application dated————————agree to be bound by and observe the rules framed under Government of India notification No. 2112S.R., dated the 20th April 1903, and item No. 25(*2*) of the First Schedule to be Indian Tariff Act, 1934.

Dated—

Signed—

Register of Salt.

(*See* rule 7.)

Date.	Opening balance of salt.	Quantity of salt received in to store.	Total quantity of salt in hand.	Quantity of salt issued and expended.	Closing balance of salt.	Quantity of products manufactured.	Manufacturer's or Manager's signature.	Remarks.
1	2	3	4	5	6	7	8	9

N.B.—In entering the quantity of products manufactured in column 7, *Soap* is to be entered in maunds, *Hydrochloric acid* by weight or volume (the specific gravity being recorded), *Alkali*, caustic or bicarbonate, by the amount (percentage of real alkali and state of hydration being recorded), *Paper* by the amount, *Hides and skin* by the number and weight salted, cured or preserved, *Guts* by the quantity salted, cured or preserved and *Other products* to be entered as prescribed by the Collector of Customs.

No. 170S.R.—5th March 1935.—With reference to item No. 25(2) of the First Schedule to the Indian Tariff Act, 1934 (XXXII of 1934), and in exercise of the powers conferred by the notification of the Government of India, Department of Finance and Commerce No. 2112-S.R., dated the 20th April 1903, the following rules are prescribed with the previous sanction of the Governor-General in Council to govern the remission of duty on salt issued in Bengal for use in any process of manufacture after having been rendered unfit for human consumption by admixture with tar, Naphthalene and Sodium Thiosulphate or such other denaturants as may hereafter be approved by the Government of Bengal. These rules supersede the rules for the clearance of duty-free tarred salt from the Sulkea golas which constitute section VI of the rules prescribed under the notification of the Board of Revenue, No. 3884B., dated the 9th July 1907, at pages 1179 to 1205 of the *Calcutta Gazette* of the 10th idem:—

Rules.

1. Every manufacturerer wishing to be admitted to the concession shall make an application through the Collector of Customs to the Government of Bengal, which shall have discretion to refuse any such application.

2. The concession may be claimed in respect either of imported salt purchased in bond or of salt of Indian manufacture purchased in the market; the duty will be remitted, in the former case, and refunded, in the latter case, provided the requirements of these rules have been complied with.

3. Salt shall be rendered unfit for human consumption by mixing tar and salt in the proportion of one seer of tar to one maund of salt or by maxing two pounds of Naphthalene powder and one pound of Sodium Thiosulphate with each maund of salt, or by mixing the salt with such other denaturant and in such proportions as the Government of Bengal shall hereafter determine. In every case this operation shall be carried out at the Sulkea Salt Golas.

4. When a manufacturer, whose application under rule 1 has been granted, intends to render any salt unfit for human consumption under these rules, not less than 24 hours' notice of such intention shall be given to the Inspector or other officer in charge of the Sulkea Salt Golas.

5. The operation of mixing the denaturant and salt shall be supervised by a special officer, who shall be deputed by the Inspector or other officer in charge of the golas at the expense, not exceeding Rs. 8 per diem, of the person applying for his services.

6. The Inspector or other officer in charge shall be responsible that not less than the prescribed quantity of denaturant is used.

7. Before permitting the removal of the denatured salt from the golas, the Inspector or other officer in charge shall satisfy himself by a personal inspection that the process of denaturation has been thoroughly performed, and shall also require the owner of the denatured salt to furnish a written guarantee that it is intended solely for use in a process of manufacture, which such owner shall specify, and that every possible precaution will be taken to prevent the article from being stolen or restored to a condition fit for human consumption.

8. Any proved case of duty-free denatured salt having been restored, or attempted to be restored, to a condition fit for human consumption shall disqualify the owner of the manufactory whence the impure article was obtained from being a custodian or consumer of such salt in future, and render the remainder of his stock of duty-free denatured salt liable to confiscation.

II. The Government of Bengal, Finance Department, notification No. 1578S.R., dated the 7th June 1918, is hereby cancelled.

D. GLADDING,

Secy. to the Govt. of Bengal.

COMMERCE DEPARTMENT.

NOTIFICATION.

No. 3157Com.—13th March 1935.—The following draft of a rule, which the Governor in Council proposes to make in exercise of the power conferred by clause (*d*) of section 32 of the Factories Act, 1934 (XXV of 1934), is published as required by section 79 of the Act for the information of all persons likely to be affected thereby, and notice is hereby given that the draft will be taken into consideration on or after the 22nd June 1935. Any objection or suggestion which may be received by the undersigned in respect of the draft rule before that date will be considered by the Governor in Council:—

Draft rule.

Any notice, order or document required or authorised to be served or sent under the Factories Act, 1934 (XXV of 1934), or any rules made thereunder—

(*a*) may be served or sent by post or by delivering the same to the person on or to whom it is to be served or sent or (where he is the occupier or manager of a factory) by delivering the same or a true copy thereof to his agent or if for any reason the officer delivering such notice, order or document is unable to find the person on or to whom it is to be served or sent or his agent, he may serve the same by displaying a copy of such notice, order or document in accordance with the provisions of section 76 of the Act, and such service shall be as effectual as if it had been made personally; and

(*b*) where it is required to be served on or sent to the occupier or manager of a factory, shall be deemed to be properly addressed, if addressed to the occupier or manager of the factory at the factory, with the addition of the proper postal address, but without naming the person who is the occupier or manager of a factory.

D. GLADDING,

Secy. to the Govt. of Bengal.

PUBLIC WORKS DEPARTMENT.

Establishment.

NOTIFICATION.

Minister-in-charge: The Hon'ble Nawab K. G. M. Faroqui, Khan Bahadur.

No. 137.—11th March 1935.—Babu Jogendra Kumar Guha, Assistant Engineer, is, on return from leave, posted to the Bakarganj Division in the Eastern Circle and appointed to officiate as Executive Engineer of that division until further orders.

J. D. V. HODGE,

Secy. to the Govt. of Bengal.

REVENUE DEPARTMENT.

Land Revenue.

NOTIFICATIONS.

Mymensingh-Dacca-Pabna.—No. 4106L.R.—14th March 1935.—Babu Sarada Ranjan Datta Gupta, Sub-Deputy Collector, employed as Assistant Settlement Officer in the district of Mymensingh, is, in the interest of public service, also appointed to be an Assistant Settlement Officer in the districts of Dacca and Pabna, with effect from the date on which he joins his settlement duties in those districts.

Dacca-Pabna.—No. 4107L.R.—14th March 1935.—Under the provisions of section 3(*14*) of the Bengal Tenancy Act, 1885 (Act VIII of 1885), Babu Sarada Ranjan Datta Gupta,

Sub-Deputy Collector, is authorised to discharge, in the districts of Dacca and Pabna, the functions of a Revenue Officer under Chapter X of the Act, so far as they relate to surveys and the preparation of record-of-rights.

He is also vested with the powers of an Assistant Settlement Officer, under Chapter VII, Part I, of the rules under the Bengal Tenancy Act, in respect of the aforesaid areas.

24-Parganas.—No. 4110L.R.—14th March 1935.—In exercise of the powers conferred by sub-section (*3*) of section 158A of the Bengal Tenancy Act, 1885 (Act VIII of 1885), the Governor in Council is pleased to appoint the Certificate Officer, Alipore Sadar, to perform the functions of a Certificate Officer under the Bengal Public Demands Recovery Act, 1913, for the purposes of the said section and in respect of any arrear rent (including cess) in the subdivision of Sadar and in that of Diamond Harbour, in the district of 24-Parganas, due to the estate of Babu Bhola Nath Mondal of Bowali, police-station Budge Budge.

Land Acquisition.

NOTIFICATION.

Bankura.—No. 4104L.A.—14th March 1935.—Babu Sachindra Nath Chatarji, Subdivisional Officer, Bishnupur, in the district of Bankura, is vested with the powers of a Collector under the Land Acquisition Act, I of 1894, in that subdivision.

DECLARATION.

Khulna.—No. 4101L.A.—14th March 1935.—Whereas it appears to the Governor in Council that land is required to be taken by Government at the expense of Daulatpur Pabla union board for a public purpose, viz., for a Muhammadan burial ground, in the village of Maheswarpasa, jurisdiction list No. 4, thana Daulatpur, pargana Maheswarpasa, zilla Khulna, it is hereby declared that for the above purpose a piece of land comprising cadastral plot No. 5604 and measuring, more or less, 0·37 of an acre, is required within the aforesaid village of Maheswarpasa.

This declaration is made, under the provisions of section 6, Act 1 of 1894, to all whom it may concern.

A plan of the land may be inspected in the office of the Collector of Khulna.

Excise.

NOTIFICATIONS.

Minister-in-charge: The Hon'ble Sir Bijoy Prasad Singh Roy, Kt.

Pabna-Bogra.—No. 241Ex. — 9th March 1935.—Maulvi Muhammad Abdullah, Inspector of Excise and Salt, is, on the expiry of his leave, posted to Pabna and placed in charge of the districts of Pabna and Bogra.

Rangpur.—No. 242Ex.—9th March 1935.—Maulvi Mouzzam Husain, Inspector of Excise and Salt, is transferred to Rangpur and placed in charge of the district.

O. M. MARTIN,
Secy. to the Govt. of Bengal.

IRRIGATION DEPARTMENT.

Irrigation.

NOTIFICATION.

No. 2-I. — 22nd February 1935. — The following draft of amendments, which in exercise of the powers conferred by section 11 of the Canals Act, 1864 (Bengal Act V of 1864), the Governor in Council intends to make in the revised rules for the Calcutta and Eastern Canals, Tolly's Nala and Sundarbans Steamer Route (published in Bengal Government notification No. 16-I., dated the 14th April 1924, at pages 829-34, Part I of the *Calcutta Gazette* of the 16th idem), is hereby published for the information of persons likely to be affected thereby.

The draft will be taken into consideration on or after the 18th April 1935, and any objections or suggestion received by the undersigned before that date will be considered:—

Draft amendments.

Insert the following new rules as rules 31 and 32 of the said rules:—

Rule 31.—No vessel or raft or float, except Government vessels plying in the interests of Government service, shall pass the Kristopur Toll Station in either direction, between 7 p.m. and 6 a.m. Service motor launches, carrying passengers, plying on monthly toll tickets, may, however, pass the Toll Office up to 9 p.m.

Rule 32.—In case a service motor launch carrying passengers wishes to pass the Kristopur Toll Station between 9 p.m. and 7 a.m. a single trip toll will be realised from the same, in addition to any previous toll paid by the launch on a single or monthly ticket.

J. D. V. HODGE,
Secy. to the Govt. of Bengal.

BOARD OF REVENUE, BENGAL.

NOTIFICATION.

No. 4421C.P.—12th March 1935.—The following draft of a notification, which the Board proposes to issue in exercise of the power conferred by section 39 of the Bengal Public Demands Recovery Act (III of 1913), is published for the information of persons likely to be affected thereby.

2. The draft will be taken into consideration on the 15th May 1935, and any objection or suggestion with respect thereto, which may be received by the undersigned before that date, will be duly considered:—

Draft notification.

In exercise of the power conferred by section 39 of the Bengal Public Demands Recovery Act (III of 1913), the Board of Revenue, Bengal, with the previous sanction of Government, is pleased to make the following amendments in Schedule II of the Bengal Certificate Manual, 1933:—

Rule 38A, page 34 of the Manual.—All refund cases of custody fees will be entered in Register 8 and the Certificate Officer will be asked to report whether the claim is admissible. If his report shows that the refund may be granted, the Collector will authorise him to issue a payment order on the back of the paper to which the Court-fee stamps are affixed. The refund will be adjustable under the head "VII—Stamps—Deduct Refunds".

M. O. CARTER,

Secy., Board of Revenue, Bengal.

TREASURY NOTICES.

Birbhum, the 12th March 1935.

Uncovenanted Deputy Collector Babu Khirod Behari Mallik is placed in charge of the Birbhum Treasury with effect from 9th March 1935 and is authorised to draw bills on other treasuries.

K. MOOKERJEE, *Collector.*

Rangpur, the 12th March 1935.

Uncovenanted Deputy Collector Babu Sarat Chandra Roy is placed in charge of the Rangpur Treasury with effect from the forenoon of the 13th March 1935, and is authorised to draw bills on other treasuries.

N. M. AYYAR, *Collector.*

Orders by the Assistant Accountant-General, Bengal.

The Treasury, the 13th March 1935.

It is notified that the refund order No. 4931 containing 50 orders "White" is in use by the Income-tax Office, Military Circle, Meerut, with effect from the 4th March 1935.

P. K. BASU,

Asstt. Accountant-General, Bengal.

SHERIFF'S OFFICE.

The 21st March 1935.

Notice is hereby given that the Second Criminal Sessions of the year 1935 of the High Court of Judicature at Fort William in Bengal for the town of Calcutta and factory of Fort William and the places subordinate thereto will be held at the Court House, in the town of Calcutta, on Wednesday, the 8th day of May next, at 11 o'clock in the forenoon, and thenceforward from day to day until the said sessions be over. And it is hereby proclaimed that all persons who are to prosecute any of the prisoners to be brought up for trial at the said sessions be present then and there to prosecute.

A. H. GHUZNAVI, *Sheriff.*

শরিফ আফিস, সন ১৯৩৫ সালের ২১শে মার্চ্চ।

সকলকে সমাচার দেওয়া যাইতেছে যে, সুবে বাঙ্গালার ফোর্ট উইলিয়ম দুর্গের অধীনে সহর কলিকাতার ও অন্যান্য স্থানের ফৌজদারী বিচার নিষ্পত্তি জন্য আগামী সন ১৯৩৫ সালের ৮ই মে বুধবার বেলা ১১ ঘটিকার সময় এবং যে পর্য্যন্ত সেসিয়নের কার্য্য সমাধা না হয়, প্রতিদিন উক্ত সময়ে কলিকাতার হাইকোর্টের আপন আদালত ঘরে সন ১৯৩৫ সালের দ্বিতীয় ক্রিমিন্যাল সেসিয়ন বসিবেক, এবং এতদ্বারা প্রচার করা যাইতেছে যে, যে সকল ব্যক্তি কোন কয়েদীর বিরুদ্ধে কোন ফৌজদারী মিছিল করিবেক, তাহারা উক্ত স্থানে উক্ত সময়ে হাজির থাকিয়া মোকদ্দমা করে। ইতি।

এ, এইচ, গজনাভি,

শরিফ।

HIGH COURT NOTICE.

English Department.

The 14th March 1935.

No. 5504G.—The services of Mr. E. S. Simpson, I.C.S., having been placed at the disposal of the Chief Justice, I do hereby appoint him, with effect from the 21st March 1935, to be Registrar of the High Court of Judicature at Fort William in Bengal on the Appellate Side, *vice* Mr. N. L. Hindley, I.C.S., whose services have been replaced at the disposal of the Government of Bengal.

HAROLD DERBYSHIRE, *Chief Justice.*

ORDERS BY COMMISSIONERS OF DIVISIONS.

Chittagong Division—Chittagong.

No. 1209G.—9th March 1935.—Maulvi Muhammad Majiruddin, Sub-Deputy Collector, Chittagong Hill Tracts, is allowed leave on average pay for eleven days, under rule 81 (*b*) (*ii*) of the Fundamental Rules, with effect from the 31st January 1935.

No. 1242G.—11th March 1935.—Under rule 20 (*b*) of the rules for the management of hospitals and dispensaries in Bengal, it is hereby notified for general information that the gentlemen named below have been appointed to be members of the managing committees of the following district board dispensaries in the district of Tippera:—

Chandina dispensary.

Babu Benode Behari Chakraborty, in place of Babu Bidhubhusan Das, Naib, Sreemantapur Kazi Ward's Estate Kutchery, deemed to have vacated his seat.

Babu Dhirendra Narayan Sen Gupta, in place of Babu Haladhar Poddar of Nabiabad and Barkamta Bazar, deemed to have vacated his seat.

Shilmuri dispensary.

Babu Barada Kumar Chakraborty, in place of Babu Nabadwip Chandra Sarkar, deemed to have vacated his seat.

Babu Sarat Chandra Mazumdar, in place of Munshi Rahimuddin Ahmed, deemed to have vacated his seat.

No. 1247G.—11th March 1935.—It is hereby notified for general information that at the by-election held on the 21st February 1935, U. Phathaw Sawdagar has been duly elected to be a Commissioner in Ward "C" of the Cox's Bazar Municipality in the district of Chittagong, *vice* Maung Mrathatun Sawdagar, deceased.

H. J. TWYNAM, *Commissioner.*

Orders by the Deputy Inspector-General of Police, Bakarganj Range.

Barisal.—No. 1119. — 7th March 1935.—Maulvi Abdul Hamid, officiating Inspector, Tippera, will continue to act as such, *vice* Rai Sahib Prabodh Chandra Mazumdar, Inspector, Tippera (officiating Deputy Superintendent of Police, Intelligence Branch), granted leave for 1½ months from the 1st March 1935.

G. H. MANNOOCH,

Deputy Inspector-General of Police (offg.).

Dacca Division—Dacca.

No. 1192J.—9th March 1935.—Babu Satish Chandra Misra, Sub-Deputy Collector and Circle Officer, Bhanga Circle, in the district of Faridpur, is appointed to be Circle Officer, Netrakona Circle, in the district of Mymensingh.

No. 1198J.—9th March 1935. — Babu Nabin Gopal Roy, Sub-Deputy Collector, Bakarganj, is allowed leave on average pay for seven days, under rule 81 (*b*) (*ii*) of the Fundamental Rules, with effect from the 29th March 1935.

No. 1203J. — 9th March 1935. — Babu Bankim Chandra Adhya, Sub-Deputy Collector and Circle Officer, Netrakona, in the district of Mymensingh, is appointed to be Circle Officer of Bhanga Circle, in the district of Faridpur.

W. H. NELSON, *Commissioner.*

Faridpur, the 1st March 1935.

No. 2226J.—It is hereby notified for general information that, under section 13 of the Bengal Village Self-Government Act (Act V of 1919), Munshi Rustamali Howladar has been appointed to be a member of the Radhaganj union board in police-station Kotwalipara in the Gopalganj subdivision of the Faridpur district, *vice* Haji Jasimaddin Howladar, deceased.

A. E. PORTER, *District Magistrate.*

Barisal, the 14th March 1935.

No. 1576J.—It is hereby notified for general information that, under section 13 of the Bengal Village Self-Government Act, 1919 (Bengal Act V of 1919), read with rule 36 of the rules for election and appointment of members of union boards, Munshi Saijaddi Howladar has been appointed by me to be a member of the Nailtala union board in police-station Nazirpur within Pirojpur subdivision of the district of Bakarganj, *vice* Munshi Daliluddin Kazi, removed under section 12 (*1*) (*d*) of the Act.

H. TUFNELL-BARRETT, *District Magistrate.*

Presidency Division—Calcutta.

No. 479L.S.-G.—8th March 1935.—It is hereby notified for general information that, under rule 23 of the dispensary manual, the undermentioned three gentlemen have been appointed to be members of the managing committee of the Kutubpur Charitable Dispensary in the district of Nadia, in place of Munshi Nimai Biswas, Shaikh Ahmed Ali and Munshi Kachharaddin Biswas, removed:—

Babu Krishna Bandhu Pal.

Babu Dhirendra Nath Mukherjee.

Md. Hari Mandal.

No. 489L.S.-G.—9th March 1935. — The gentlemen named below have been appointed to be members of the managing committee of the Baraset Charitable Dispensary and Hospital in the district of the 24-Parganas:—

The Subdivisional Officer, Baraset (*ex-officio*).

The Medical Officer, Baraset Dispensary (*ex-officio*).

Dr. Haripada Chakravarty.

Babu Gobordhone Banerjee.

Maulvi Abdul Khaleque.

Babu Harisadhon Chatarji.

Babu Nalin Krishna Chatarji.

Babu Sashi Bhusan Mukherjee.

Maulvi Anwarul Haque.

No. 438M.—11th March 1935.—In exercise of the powers conferred by sub-section (*3*) of section 145 of the Bengal Municipal Act, 1932 (Bengal Act XV of 1932), delegated to all Commissioners of Divisions by the local Government in their notification No. 6697M., dated 7th December 1933, I hereby authorise the Commissioners of the Kamarhati Municipality in the district of the 24-Parganas at a meeting to appoint Babu S. N. Bose, C.E., being a person approved by me, with salary, to prepare the valuation and assessment list of the municipality.

No. 509L.S.-G.—11th March 1935.—It is hereby notified for general information that, under rule 23 of the dispensary manual, Babu Nishi Bhusan Mazumder has been appointed to be a member of the managing committee of the Islamkati Charitable Dispensary in the district of Khulna, in place of Babu Chandidas Bose, resigned.

A. J. DASH, *Commissioner (offg.)*.

Bengal Chamber of Commerce constituency of the Bengal Legislative Council.

Calcutta, the 21st March 1935.

Notice is hereby given, under the provisions of No. 19 (*5*) of the Bengal Electoral Rules, that the return of election expenses and declaration made in respect thereto with regard to his candidature for election as a representative of the Bengal Chamber of Commerce constituency of the Bengal Legislative Council was duly lodged with me by Mr. T. Lamb. The return and declaration may, on payment of a fee of one rupee, be inspected on application to me at my office between the hours of 11 a.m. and 4 p.m. for one week from date.

A. C. DANIEL, *Returning Officer*.

Indian Tea Association Constituency of the Bengal Legislative Council.

Calcutta, the 21st March 1935.

Notice is hereby given, under the provisions of No. 19(*5*) of the Bengal Electoral Rules, that the return of election expenses and the declaration made in respect thereof in regard to his candidature for election as a representative of the Indian Tea Association constituency of the Bengal Legislative Council, were duly lodged by Mr. Charles Gordon Arthur with me on the 12th March 1935. Such return and declaration may, on payment of a fee of one rupee, be inspected on application to me in my office between the hours of 11 a.m. and 4 p.m. for one week from this date.

D. C. FAIRBAIRN, *Returning Officer*.

Orders by the Deputy Inspector-General of Police, Presidency Range.

Calcutta.—No. 1694-95.—19th March 1935. —Sub-Inspector Sushil Kumar Basu of Nadia, is appointed to act as Inspector, 24-Parganas, *vice* Babu Udayshashi Mukharji, officiating Inspector, reverted to his substantive rank.

Babu Lalit Bihari Sinha, Inspector, E. B. Railway Police, Sealdah, is transferred to Murshidabad in exchange with Babu Surendra Nath Lahiri, Inspector of that district.

Maulvi Shaikh Imad Husain, officiating Inspector, E. B. Railway Police, Sealdah, will continue to act as such, *vice* Babu Surendra Nath Lahiri, Inspector, officiating as Deputy Superintendent of Police, Sirajganj, Pabna.

Babu Hira Lal Das, officiating Inspector, Murshidabad, will, on relief, revert to his substantive rank.

Sub-Inspector Tahsanuddin Sardar of Khulna, is appointed to act as Inspector, E. B. Railway Police, Sealdah, *vice* Babu Gyanendra Nath Datta, Inspector, on leave.

The transfers involved in the above orders are effected in the interests of public service.

This cancels the orders already published.

L. H. BURTON,

Deputy Inspector-General of Police.

Rajshahi Division—Jalpaiguri.

Bogra, the 11th March 1935.

No. 921J.—It is hereby notified for general information that, under sub-section (*2*) of section 6 of the Bengal Village Self-Government Act, 1919 (Bengal Act V of 1919), the following gentlemen have been duly elected to be members of the under-mentioned union board in the district of Bogra:—

Bogra police-station.

Nishindara union board.

Ward No. I.

Munshi Miajan Ali Pramanik.
Munshi Miajan Uddin Mondal.

Ward No. II.

Munshi Abdul Latif Jiladar.
Munshi Abul Kasem Pramanik.

Ward No. III.

Munshi Alim Uddin Khondker.
Munshi Majir Uddin Ahmed.

Under sub-section (*3*) of section 6 of the aforesaid Act, the following gentlemen have been appointed to be members of the said union board:—

Munshi Md. Habibar Rahaman.
Babu Rajani Kanta Poddar.
Maulvi Azizal Huq Khondker.

No. 933J.—It is hereby notified for general information that, under sub-section (*2*) of section 6 of the Bengal Village Self-Government Act, 1919 (Bengal Act V of 1919), the following gentlemen have been duly elected to be members of the under-mentioned union boards in the district of Bogra:—

Khetlal police-station.

Jinderpur union board.

Ward No. I.

Munshi Sheikh Mobarak Ali.
Munshi Sha Jahir Uddin Choudhury.

Ward No. II.

Munshi Afir Uddin Choudhury.
Munshi Shah Maez Uddin Choudhury.

Ward No. III.

Munshi Amanu Mondal.
Munshi Abdul Jobbar Khondkar.

Jaipurhat police-station.

Dogachi union board.

Ward No. I.

Babu Rajani Kanta Ghosh.

Ward No. II.

Munshi M. Farahtulla Mondal.
Munshi Sujan Mia Mondal.

Ward No. III.

Munshi Md. Khalilor Rahman Mia.
Munshi Kuranu Mondal.
Babu Jnanada Nanda Sircar.

Bambu union board.

Ward No. I.

Maulvi Ezzat Ulla Ahmed.
Maulvi Md. Ishaq.

Ward No. II.

Maulvi Md. Idris.
Maulvi Md. Waqqas.

Ward No. III.

Maulvi Safer Uddin Mondal.
Maulvi Md. Hyder Ali.

Panchbibi police-station.

Aymarasulpur union board.

Ward No. I.

Munshi Kasitulla Mondal.
Munshi Meser Uddin Mondal.

Ward No. II.

Babu Sibnath Borma.
Munshi Maser Ali Mondal.

Ward No. III.

Munshi Monir Uddin Mondal.
Munshi Monser Ali Mondal.

Under sub-section (*3*) of section 6 of the said Act, the following gentlemen have been appointed to be members of the above-mentioned union boards:—

Khetlal police-station.

Jinderpur union board.

Babu Rajeswar Das.
Babu Saheb Ram Pal.
Munshi Rajab Ali Fakir.

Jaipurhat police-station.

Dogachi union board.

Babu Banamali Sarkar.
Munshi Gobra Sardar.
Munshi Suktuddin Mondal.

Bambu union board.

Babu Giridhar Singh.
Munshi Abdul Mondal.
Munshi Mir Sakhwat Ali.

Panchbibi police-station.

Aymarasulpur union board.

Babu Jadab Chandra Sarkar.
Munshi Kifat Ulla Mondal.
Munshi Malek Uddin Mondal.

T. I. M. NURANNABI CHAUDHURI,
District Magistrate.

Registered No. C207

The Calcutta Gazette

THURSDAY, MARCH 21, 1935.

PART IA

Orders and Notifications by the Government of India republished for general information.

ARMY DEPARTMENT.

New Delhi, the 2nd March 1935.

Part B.

No. 122.—The following draft of a further amendment to the Indian Territorial Force Rules, 1921, which it is proposed to make in exercise of the powers conferred by section 13 of the Indian Territorial Force Act, 1920 (XLVIII of 1920), is published as required by sub-section (*1*) of the said section, for the information of all persons likely to be affected thereby, and notice is hereby given that the said draft will be taken into consideration on or after the 2nd April 1935. Any objection or suggestion which may be received from any person with respect to the draft before the said date will be considered by the Governor-General in Council.

Draft Amendment.

In Schedule III to the said Rules, in Part III, to sub-item (*i*) of item (*a*) and to sub-item (*i*) of item (*b*) the following shall be added, namely:—

"Subadar Majors will also draw the personal allowance of Rupees 50 per month as for the corresponding ranks of the regular Indian Army."

No. 123.—In exercise of the powers conferred by section 13 of the Indian Territorial Force Act, 1920 (XLVIII of 1920), the Governor-General in Council is pleased to direct that the following further amendment shall be made in the Indian Territorial Force Rules, 1921, the same having been previously published as required by sub-section (*1*) of the said section, namely:—

In Part I of Schedule III to the said Rules, to clause (*a*) of item (*ii*) the following shall be added, namely:—

"and provided the officers concerned live, mess and sleep in camp".

ORGANIZATION.

No. 124.—In exercise of the powers conferred by section 13 of the Indian Territorial Force Act, 1920 (XLVIII of 1920), the Governor-General in Council is pleased to direct that the following further amendment shall be made in the Indian Territorial Force Rules, 1921, the same having been previously published as required by sub-section (*1*) of the said section, namely:—

In Schedule III to the said Rules, for item (*ii*) of Part II, the following item shall be substituted, namely:—

"(*ii*) Camp or voluntary training allowance as in I (*ii*) above."

G. R. F. TOTTENHAM,
Secy. to the Govt. of India.

DEPARTMENT OF EDUCATION, HEALTH AND LANDS.

NOTIFICATION.

New Delhi, the 3rd January 1935.

No. F.-256/33-L. & O.—In exercise of the powers conferred by section 24 of the Indian Emigration Act, 1922 (VII of 1922), the Governor-General in Council is pleased to direct that the following further amendments shall be made in the Indian Emigration Rules, 1923, the same having been previously published as required by section (1) of the said section, namely:—

1. For sub-rule (1) of rule 30 of the said Rules the following sub-rule shall be substituted, namely:—

"30. *Non-recruited emigrants.*—(*1*) Any person who desires to obtain assisted passages, but does not desire the assistance of Emigration Agents, may apply direct to the Emigration Commissioner of the country to which he wishes to proceed or to any person empowered by the Emigration Commissioner in this behalf with the approval of the local Government. The application shall be accompanied by a certificate in Form No. 3 from the headman of the village in which the intending emigrant resides.

Provided that if the members of the intending emigrant's family object to his emigration, such emigrant shall not be permitted to emigrate unless he obtains an endorsement on the certificate from a magistrate having jurisdiction in the area in which he resides.

Provided further that the Protector of Emigrants may, in his discretion, dispense with the certificate in the case of an emigrant who claims to have worked in the country to which he desires to emigrate or who claims to emigrate for the purpose of rejoining relatives on whom he is dependent, and produces documentary evidence in support of his claim."

2. In the Schedule to the said Rules for Form No. 3 the following Form shall be substituted, namely:—

"FORM No. 3.

[See rule 30 (1).]

Form of certificate for persons applying for assisted passages without the intervention of an Emigration Agent.

Persons applying for assisted passages.		Dependents and persons accompanying the applicant under rule 22.			Sex.	Age.	Caste.	Occupation.	Residence.			
Name.	Father's name.	Name.	Father's name.	Relationship to emigrant.					District.	Taluk.	Post Office.	Village or Town and Mohalla.

Certified that the persons named and described above are desirous of proceeding to the country of.....if granted assisted passages. They do not appear to have been induced to emigrate by any Emigration Agent or any other person and their emigration is not prohibited by the Emigration Act.

I have questioned the members of their families, who $\frac{\text{have no objection}}{\text{object}}$ to the emigration.

Dated

Village Headman."

G. S. BAJPAI,
Secy. to the Govt. of India.

HOME DEPARTMENT.

NOTIFICATIONS.

ESTABLISHMENTS.

New Delhi, the 7th March 1935.

No. F.-10/16/34.—The following resolution by the Secretary of State for India in Council is published for general information:—

In exercise of the powers conferred by sub-section (2) of section 96B of the Government of India Act, the Secretary of State, with the concurrence of the majority of votes at a meeting of the Council of India held this 29th day of January 1935, hereby makes the following amendment to the Superior Civil Services Rules, namely:—

In rule 17 of the said Rules, for the first proviso, the following proviso shall be substituted, namely:—

"Provided that whenever the exigencies of the public service so require—

(i) the Governor-General in Council may appoint—

(*a*) a member of General Central Services, Classes I or II, employed in the Forest Research Institute and College, Dehra Dun, or a member of a Provincial Forest Service to a post at the said Institute and College borne on the cadre of the Indian Forest Service,

(*b*) a member of General Central Service, Class II, employed in the Andamans Forest Department or a member of a Provincial Forest Service to a post in the said Department borne on the cadre of the Indian Forest Service,

(ii) a local Government may appoint a member of a provincial police service to a post borne on the cadre of the Indian Police other than a post of Inspector-General, Deputy Inspector-General or Commissioner of Police, and a member of a Provincial Forest Service to a post borne on the cadre of the Indian Forest Service other than a post of Chief Conservator or Conservator of Forests,

for a period not exceeding twelve months."

M. G. HALLETT,
Secy. to the Govt. of India.

JAILS.

The 5th March 1935.

No. F. 29/1/35.—The services of Major B. P. Baliga, I.M.S., are placed at the disposal of the Government of Bengal for employment in the Jail Department, with effect from the date on which he assumes charge of his duties.

T. SLOAN,
Joint Secy. to the Govt. of India.

DEPARTMENT OF INDUSTRIES AND LABOUR.

NOTIFICATION.

New Delhi, the 4th March 1935.

No. L.-3002.—Whereas by the notification of the Government of India in the Department of Industries and Labour No. L3002, dated the 30th January 1934, notice was given of the intention of the Governor-General in Council to cancel the notifications of the Government of India in the Department of Industries and Labour, No. L1183, dated the 1st August 1924, No. L1446, dated the 13th December 1926, No. L1476, dated the 15th July 1927, and No. L1440, dated the 12th July 1928:

Now therefore in pursuance of sub-section (3) of section 2 of the Workmen's Compensation Act, 1923 (VIII of 1923) the Governor-General in Council is pleased to cancel the said notifications.

A. G. CLOW,
Joint Secy. to the Govt. of India.

FOREIGN AND POLITICAL DEPARTMENT.

NOTIFICATION.

New Delhi, the 28th February 1935.

No. 140-I. B.—Colonel A. M. Mills, C.B., D.S.O., A.D.C., I.A., is appointed Military Adviser-in-Chief, Indian States Forces, with effect from the forenoon of the 16th February 1935.

B. J. GLANCY,
Political Secy. to the Govt. of India.

FINANCE DEPARTMENT.

NOTIFICATION.

New Delhi, the 7th March 1935.

No. F. 8-VIII-R. II/34.—The following Resolution by the Secretary of State in Council is published for general information:—

In exercise of the powers conferred by sub-section (2) of Section 96B of the Government of India Act, the Secretary of State, with the concurrence of the majority of votes at a meeting of the Council of India held this fifth day of February, 1935, hereby makes the following amendment in the Civil Service Regulations, namely:—

1. In Article 939 of the said Regulations after the figures "28" the following shall be inserted, namely:—

"or (in the case of Presidency payments) Form 27-I or 28-A."

2. The note to Article 939 of the said Regulations shall be numbered "Note 1" and the following shall be inserted as "Note 2", namely:—

"Each Pension Payment Order will be accompanied by Form 27-A intended to be delivered by the disbursing officer to the pensioner concerned for use as a wallet for the pensioner's half of the Pension Payment Order."

3. In Part XIII of the Appendices to the said Regulations:—

(i) in the list of Pension Procedure Forms—

(*a*) against the existing Forms Nos. 22, 25, 26, 27, 28, and 29, an asterisk shall be placed.

(*b*) in their appropriate place, the following new Forms shall be inserted, namely:—

"*x27, Pension Payment Order (Bilingual)—see Article 939.

*27-A, Wallet for the Pension Payment Order—see Article 939, note 2.

*27-I, Pension Payment Order (Presidency payments)—see Article 939.

*28-A, Pension Payment Order of certain classes of pensioners (Presidency payments)—see Article 939."

(ii) To the list of Pension Procedure Forms the following foot-note shall be added, namely:—

"*These forms are for the use of officers under the administrative control of the Central Government and minor Local Governments standardised in the Civil Service Regulations series and their supplies are, subject to the observance of the procedure prescribed by the Controller of Printing Stationery, obtainable from the Manager of Forms Press, 166, Dhurumtollah Street, Calcutta.

xThis form is authorised to be printed as a special form."

(iii) After Form No. 27 the following shall be inserted, namely:—

"Form No. 27-A (Pension)—referred to in Article 939, note 2.

Form No. 27-I (Pension)—referred to in Article 939, Pension Payment Orders (for Presidency payments)".

(iv) After Form No. 28 the following shall be inserted, namely:—

"Form No. 28-A (Pension)—referred to in Article 939, Pension Payment Order of certain classes of pensioners (Presidency payments)."

P. C. TALLENTS,

Secy. to the Govt. of India.

Registered No. C207

The Calcutta Gazette

THURSDAY, MARCH 21, 1935.

PART IB

Educational Notices.

Board of Apprenticeship Training.

Calcutta, the 13th February 1935.

Technical Schools Examination—December 1934.

RESULTS.

(In order of merit.)

Heat Engines (Advanced).

Pass.

Kanchrapara Technical School.

1 Kalipada Ghosh.

Calcutta Technical School.

2 L. M. Kundu.

Kanchrapara Technical School.

3 Pradyot K. Chatterjee.
4 Sudhir Ch. Das Gupta.

Khargpur Technical School.

5 R. I. Shutie.
6 G. D. Choudhuri.
8 Philip Sourendra K. Biswas (Kanchrapara).
R. A. Wilkins (Khargpur).

Mechanics Applied to Machinery (Elementary).

Pass.

Khargpur Technical School.

1 S. Santhanaranam.
2 L. Hiscox.
3 S. K. Bishnu (A. B. Railway, Pahartali).
4 V. A. Magry (Khargpur).

Khargpur Technical School.

5 C. Waldeck.
7 Karunamaya Datta (Kanchrapara).
K. Paul (Calcutta Technical School).

Electrical Engineering (Advanced).

Pass with Distinction.

Kanchrapara Technical School.

1 Satyasashi Chowdhury.

Pass.

Kanchrapara Technical School.

2 K. W. B. Perrett.
3 Terence Leslie Scott.
4 Santosh Chatterjee.

Plane and Solid Geometry (Elementary).

Pass with Distinction.

Calcutta Technical School.

1 S. A. Sadique.

Pass.

Kanchrapara Technical School.

2 Andrew Luck Bonnet.
3 Pratul Kumar Roy.
4 Birendra Mohan Ganguly.
6 Karunamaya Dutta
Sankar Das (Calcutta Technical School).

Steam (Elementary).

Pass.

Khargpur Technical School.

1 L. Hiscox.
C. Waldeck.

Kanchrapara Technical School.

3 Pratul Kumar Roy.
4 Benoy Bhusan Mukherjee.
6 Mazumdar, Ramdas.
V. A. Magry (Khargpur Technical School).

Khargpur Technical School.

7 T. L. Gaudoin.

Kanchrapara Technical School.

8 Ronald George Rosario.
10 Oscar Douglas Beeby.
H. G. Nilsen (Khargpur).

Kanchrapara Technical School.

11 Sankar Kumar Kanjilal.
12 Philip Sourendra K. Biswas.
14 Abani Mohan Mittra.
Biswa Nath Bose.

Magnetism and Electricity (Advanced).

Pass with Distinction.

Kanchrapara Technical School.

1 Umapada Kanjilal.
3 Benoy Bhusan Mukherjee.
Abani Mohan Mittra.

Calcutta Technical School.

4 S. A. Sadique.

Kanchrapara Technical School.

5 Pratul Kumar Roy.

Pass.

Kanchrapara Technical School.

6 Chitta Ranjan Bose.
7 Kishori Mohan Kundu.
8 K. W. B. Perrett.
11 Nirmal Kumar Shah.
Sankar Kumar Kanjilal.
Ramdas Mazumdar.

Machine Design (Advanced).

Pass.

Kanchrapara Technical School.

1 Kantimohan Chatterjee.
2 Satyasashi Chowdhury.
3 Bhola Nath Chatterjee.
4 Santosh Chatterjee.
5 Anil Chandra De.

Practical Mathematics (Elementary).

Pass with Distinction.

Calcutta Technical School.

1 S. A. Sadique.
K. Paul.
3 Shankar Das.
Andrew Luck Bennet (Kanchrapara).

Pass.

Kanchrapara Technical School.

5 Birendra Mohan Ganguly.

Khargpur Technical School.

6 J. D. Franklin.
7 E. A. Gwynne.
8 G. Green.
9 Mongal Singh.
10 A. H. Watkins.

Kanchrapara Technical School.

12 Karunamaya Dutta.
Nikhilendu Sinha Chowdhury.

Practical Mathematics (Advanced).

Pass.

Calcutta Technical School.

1 L. M. Kundu.
Santosh Chatterji (Kanchrapara Technical School).

Kanchrapara Technical School.

3 Kantimohan Chatterjee.
4 Anil Chandra De.
Narendra Nath Bose.
6 Kali Krishna Mittra.

Strength of Materials (Advanced).

Pass.

Khargpur Technical School.

1 G. D. Choudhuri.
2 S. N. Ghosh.

Kanchrapara Technical School.

3 Gouri Prosad Barat.

Khargpur Technical School.

4 T. Sudarsana Rao.
5 N. C. Clarke.

Kanchrapara Technical School.

6 Dibakar Burman.
7 Narendra Nath Bose.

Khargpur Technical School.

8 N. V. Millar.

Machine Construction and Drawing (Elementary).

Pass with Distinction.

Kanchrapara Technical School.

1 Leonard Maxwell Brown.

Pass.

Kanchrapara Technical School.

2 Oscar Douglas Beeby.

Khargpur Technical School.

3 H. G. Nilsen.

Kanchrapara Technical School.

4 Kalipada Ghosh.
6 Nirmal Kumar Shah.
Henry Charles Ross.
7 Chuni Lal Mukherjee.
8 Wilfred Edwin Brown.
10 Santosh Kumar Ghosh.
Ramdas Mazumdar.
12 Neville James Lowis.
Kishori Mohan Kundu.
15 Larence Stanford Keelan.
Reginald Alexander Christians.
M. L. Mitra (Pahartali Technical School, A. B. Railway).

E. J. HOGBEN, *Secretary,*
Board of Apprenticeship Training.

Presidency Division.

Calcutta, the 7th March 1935.

Erratum to the results of the Primary (Maktab) Final Examination, 1934, published in the Calcutta Gazette *of the 3rd January 1935.*

24-Parganas District.

Kulpi Centre.

Under Kulpi Practising U. P. please *read*—

113 Kari Bhusan Haldar (E) I

for

113 Kasi Bhusan Haldar (E) I.

Addendum to the results of the Primary (Maktab) Final Examination, 1934, Nadia district, published in the Calcutta Gazette *of the 3rd January 1935.*

The following candidate is declared to have passed the Primary (Maktab) Final Examination, 1934:—

(E indicates that the candidate has passed in English.)

Roll.	Name.	Division.

Nadia District.

Chuadanga Centre.

Kamalapur Practising U. P.

26 Kamala Kanta Saha (E) I

Erratum to the list of scholarships awarded on the results of the Primary (Maktab) Final Examination, 1934, published in the Calcutta Gazette *of the 24th January 1935, page 246.*

Under the heading "Scholarships reserved for educationally backward classes" please *read*—

Kari Bhusan Haldar

for

Kasi Bhusan Haldar.

J. G. SEN, for *Inspector of Schools.*

Government Commercial Institute, Calcutta.

NOTIFICATION.

Calcutta, the 14th March 1935.

7th of May 1935 having been declared to be a public holiday in celebration of the Silver Jubilee of His Majesty the King-Emperor, the Government Commercial Course Special Examinations in Junior and Advanced Book-keeping will be held on the 8th May 1935 instead of on the 7th May 1935 as previously notified at the hours noted below:—

Final and Special Examinations in Junior Book-keeping—11 a.m.

Special Examination in Advanced Book-keeping—2 p.m.

The Final Examination announced to be held on the 8th May 1935 will be held on the 13th May 1935.

This cancels the corresponding portion of the gazette notification, dated the 15th February 1935.

D. L. DUTT, *Secy.*,

Govt. Commercial Institute Board (offg.).

Board of Apprenticeship Training.

Calcutta, the 4th February 1935.

Apprenticeship Admission Examination - January 1935.

The results of the Admission Examination of the Board of Apprenticeship Training held in January 1935, are as follows:—

In order of merit.	Roll No.	Name.	Age on the 1st January 1935. Y.	M.
		First Class.		
1	11	Arnold Jajima Smith ..	17	7
2	38	Earnest William Solleso ..	18	6
3	34	Arthur Ernest Abbott ..	17	11
4	27	Nirmal Kumar Chatterjee ..	18	4
5	37	George Osmond Barker ..	17	4
		Second Class.		
6	47	Debabrata Sen Gupta ..	19	0
7	29	Gopal Krishna Saha ..	18	10
8	10	Henry John Denzil Gale ..	16	9
9	45	Gopal Chandra Bhar ..	17	11
10	137	Reginald Rhoderick ..	18	2
11	33	Peter Atkinson ..	16	4
12	75	Dinendra Nath Banerjee ..	17	1
13	52	Samarendra Nath Choudhury ..	19	0
14	60	A. M. Ashfaque Ali ..	17	10
15	65	Francis Anthony LaPorte ..	16	4
16	88	Dinnis Oscor Finnerty ..	17	2
17	9	Douglas Arnold Laird Adshead	16	6
18	103	Charles John Gaudincio ..	18	2
19	46	John Mervyn Anania ..	17	4
20	19	Notu Behari Chatterjee ..	18	4
21	50	Bhagat Singh	18	1
22	36	Cyril John Raye	17	8
23	49	Shibdas Banerjee	18	5
24	72	Bibhuti Bhusan Ghose ..	19	0

Note.—In accordance with the Board's Rules the names of overage candidates, who have passed the examination, are not published nor included in the above lists. In the case of such overage candidates the result of the examination will be communicated to the firms sending them for the examination.

E. J. HOGBEN, *Secretary,*

Board of Apprenticeship Training.

Office of the Inspectress of Schools, Dacca Circle.

ERRATUM.

Dacca, the 6th March 1935.

In this office notification, dated the 10th December 1934, published in pages 1429 and 1430 of the *Calcutta Gazette*, dated the 20th December 1934—

For

Musammat Tamirunnessa—Domar Girls' Primary School, Bogra,

please *read*

Musammat Tamirunnessa — Domargram Girls' Primary School, Bogra.

N. BHATTACHARJI,

Inspectress of Schools, Dacca Circle (offg.).

Registered No. C207

The Calcutta Gazette

THURSDAY, MARCH 21, 1935.

PART II

Advertisements.

Notices.

Advertisements, Notices, etc., intended for insertion in this part of the Gazette cannot be received after noon on Saturday. All manuscripts and postal remittances must be addressed to Superintendent, Government Printing, Bengal Government Press, Alipore. For the convenience, however, of parties or firms located in Calcutta cash payments of Advertisement charges may be made at Publication Sales Office, Room No. 2, Ground Floor, Writers' Buildings, Calcutta.

Land Sale Notices.

Notification A.

NOTICE is hereby given, under sections 6 and 13, Act XI of 1859, that the undermentioned estates and shares of estates in the district of Rangpur will be put up for sale at the office of the Collector of that district on 25th March 1935, at 11 a.m., for arrears of revenue and other demands which by law are realisable as arrears of land revenue.

When in columns 5, 7 and 9 of the following statement it is stated that only a share is to be sold, it is to be understood that a separate account is kept for that share :—

Tauzi No.	Name of mahal and pargana.	Sadar jama of whole estate.	Whether the whole estate is to be sold.	If only a share is to be sold, specification of such share or shares.	Names of proprietors of property to be sold.	If only a share is to be sold, the sadar jama of such share.	If the whole estate is to be sold, the arrears due from it.	If only a share is to be sold, the arrears due from it.
1	2	3	4	5	6	7	8	9
		Rs. a. p				Rs. a. p.	Rs. a. p.	Rs. a. p.
42 Res.	Kazirhat, hisya 4 annas, pargana Chakle Kazirhat.	10,435 6 4	No ..	8 annas share of the estate.	Annada Prasad Sen for self and sebayet of Lakshmi Jonardan Thakur.	5,217 11 2	..	1,409 1 0
42/4	Ditto ..	10,435 6 4	No ..	2 annas share of the estate. All other shares besides that specified will be excluded from sale.	Majibor Rahman Choudhury and Jahar Ulla Shah Choudhury.	1,304 6 10	..	176 2 0
77	Magura O'goyraha, pargana Chakle Kazirhat Fatepur.	9,056 11 2	Whole	....	Puran Chand Nahata, Juan Chand Nahata.	..	2,454 7 9	..
82	Musaponlighat O'goyraha, pargana Chakle Kazirhat.	6,408 5 4	Do. ..	....	Raja Gopal Lal Roy Bahadur.	..	1,735 7 6	..
185	Kunja Sakpala, hisya 8 annas, parganas Kunja Sakpala, Bairighoraghat and Pogoil.	5,181 10 2	Do. ..	....	Ditto ..	..	1,743 7 6	..
248	Radha Krishnapur O'goyraha, pargana Andua.	9,839 5 1	Do. ..	....	Ditto ..	..	3,264 0 0	..
506	Kunja Sakpala, hisya 8 annas, parganas Alihat, Kunja Sakpala, Bairighoraghat, and Pogoil.	5,181 10 1	Do. ..	....	Brindaban Chandra Roy Choudhury.	..	1,743 7 6	..

The abovementioned estates are being advertised for sale for instalments of revenue which were due on or before the 30th Agrahayan, 1341 B.S., of which the latest date of payment was 12th January 1935 A.D.

Rangpur, the 1st March 1935.

N. M. AYYAR, Collector

Notification A.

NOTICE is hereby given, under sections 6 and 13, Act XI of 1859 that the undermentioned estates and shares of estates in the district of Rangpur will be put up for sale at the office of the Collector of that district on 25th March 1935, at 11a.m., for arrears of revenue and other demands which by law are realizable as arrears of land revenue.

When in columns 5, 7 and 9 of the following statement it is stated that only a share is to be sold, it is to be understood that a separate account is kept for that share :—

Tauzi No.	Name of mahal and pargana.	Sadar jama of whole estate.	Whether the whole estate is to be sold.	If only a share is to be sold, specification of such share or shares.	Names of proprietors of property to be sold.	If only a share is to be sold, the sadar jama of such share.	If the whole estate is to be sold, the arrears due from it.	If only a share is to be sold, the arrears due from it.
1	2	3	4	5	6	7	8	9
		Rs. as. p.				Rs. as. p.	Rs. as. p.	Rs. as. p.
1/2	Bamandanga, pargana Bamandanga.	33,477 11 0	No ..	8 annas share of mauza Joydebpur taluk, group B. All other shares besides that specified will be excluded from the sale.	Bhabani Prasanna Lahiri and Krishna Prasanna Lahiri.	1,573 7 8	..	426 2 0
2	Ramdhan O'goyraha, pargana Fatepur.	4,517 2 11	Whole	....	Raja Gopal Lal Roy Bahadur.	..	1,221 13 5	..
18/1	Fatepur, hisya 3 annas, pargana Chakle Fatepur.	13,196 4 0	No ..	16 annas share of mauza Habu taluk, group C.	Protap Chandra Choudhury and others.	377 0 0	..	57 2 10
18/13	Ditto ..	13,196 4 0	No ..	16 annas share of mauza Kamalkachna taluk, group G. All other shares besides that specified will be excluded from the sale.	Bhabani Prasanna Lahiri and Krishna Prasanna Lahiri.	692 0 0	..	187 5 10
39 Res.	Shalhati O'goyraha, pargana Chakle Kazirhat.	2,522 13 0	No ..	14 annas share of the estate. All other shares besides that specified will be excluded from the sale.	Maulvi Syed Fazle Rahim and others.	2,207 7 4	..	597 5 2
47/4	Gorgram, pargana Chakle Kazirhat.	4,622 11 5	No ..	1 a. 18 g. 3 c. 1 k. 3 til 6¾ bahar share of the estate. All other shares besides that specified will be excluded from the sale.	Bireswar Chatterjee, guardian of Annada Mohan Das and Sachindra Mohan Das.	560 13 4	..	151 14 11
48	Joychandi, O'goyraha, pargana Chakle Kazirhat.	1,544 10 5	Whole	....	Ramani Mohan Chowdhury.	..	416 2 1	..
50/1	Ketkibari O'goyraha, pargana Chakle Kazirhat.	1,544 5 8	No ..	6 as. 2 g. 3 c. share of the estate.	Munshi Amiruddin Sarker and others.	590 0 4	..	155 7 5
50/2	Ditto ..	1,544 5 8	No ..	4 annas share of the estate. All other shares besides that specified will be excluded from the sale.	Abdur Rahman Choudhury, motwalli of Alam Biditar Jumma Masjid.	386 1 5	..	107 5 3
51	Suradhan O'goyraha, pargana Chakle Kazirhat.	2,581 5 7	Whole	....	Raja Gopal Lal Roy Bahadur.	..	699 11 9	..
59 Res.	Matukpur O'goyraha, pargana Chakle Kazirhat.	778 11 0	No ..	16 annas share of mauza Charaikhola, group A. 6 as. 11 g. 2 c. share of mauza Matukpur, group B. All other shares besides that specified will be excluded from the sale.	Bidyat Lata Debi, guardian of Harendra Chandra Goswami and Indu Bhusan Goswami and others. Bhujanga Bhusan Haldar and others.	557 10 3	..	151 2 0
64	Jamirbari O'goyraha, pargana Chakle Kazirhat.	1,647 2 8	Whole	....	Brindaban Chandra Roy Choudhury.	..	446 14 11	..
78/5	Haroa O'goyraha, hisya 7 annas, parganas Chakle Kazirhat, Fatepur and pargana Kundi.	3,922 13 3	No ..	16 annas share of mauza Harirampur goyraha, group A. All other shares besides that specified will be excluded from the sale.	Ramani Mohan Choudhury.	1,580 3 3	..	698 7 3
93	Bisandai O'goyraha, pargana Chakle Kazirhat.	1,442 15 10	Whole	....	Jatindra Mohan Roy Choudhury and others.	..	98 2 1	..
95	Daud, pargana Chakle Kazirhat.	603 4 1	Do. ..	....	Nripendra Narayan Rudra.	..	163 3 2	..

Tauzi No.	Name of mahal and pargana.	Sadar jama of whole estate.	Whether the whole estate is to be sold.	If only a share is to be sold, specification of such share or shares.	Names of proprietors of property to be sold.	If only a share is to be sold the sadar jama of such share.	If the whole estate is to sold, the arrears due from it.	If only a share is to be sold, the arrears due from it.
1	2	3	4	5	6	7	8	9
		Rs. as. p.				Rs. as. p.	Rs. a. p.	Rs. as. p.
97	Charcharabari O'goyraha, pargana Chakle Kazirhat.	680 7 5	Whole	....	Akshoy Lal Saha and others.	..	188 7 6	..
99	Bahalipara, hisya 10 annas, pargana Kazirhat.	570 0 0	Do.	....	Mihir Kumar Lahiri and others.	..	154 10 9	..
100	Shimulbari, pargana Chakle Kazirhat.	526 8 1	Do.	....	Nityaradha Dasya and others.	..	142 14 11	..
101	Latifchapra, pargana Chakle Kazirhat.	971 6 2	Do.	....	Raja Gopal Lal Roy Bahadur.	..	263 7 5	..
103	Ambari, pargana Chakle Kazirhat.	2,618 7 3	Do.	....	Shah Md. Khalil Uddin Hyder Abu Jober and others.	..	708 4 4	..
104	Bengmari, pargana Chakle Kazirhat.	1,322 9 7	Do.	....	Nityaradha Dasya and others.	..	358 6 5	..
106 Res.	Tupamari, pargana Chakle Kazirhat.	2,078 2 7	No ..	14 as. 16 g. 2 c. 2 kt. share of the estate.	Feshru Mohammad Shah Choudhury and others.	1,926 10 1	..	522 10 0
106/1	Ditto ..	2,078 2 7	No ..	1 a. 3 g. 1 c. 1 kt. share of the estate. All other shares besides that specified will be excluded from the sale.	Ditto ..	151 8 6	..	41 10 3
109	Kadikol O'goyraha, Motalak lat Cheranga, hisya 6 as. 4 g. 1 c. 7dt., pargana Chakle Kazirhat.	607 1 11	Whole	....	Rakhal Chandra Choudhury.	..	159 7 11	..
113	Cheranga, pargana Chakle Kazirhat.	831 4 4	Do.	....	Nityaradha Dasya and others.	..	225 0 0	..
120 Res.	Kuchiamor, pargana Chakle Kazirhat.	1,003 12 3	No	16 annas share of mauza Bahalipara, group A. 9 as. 5 g. 1 c. 1 kt. 12 til share of mauza Kuchiamore, group B. All other shares besides that specified will be excluded from the sale.	Kumud Kumar Lahiri and others.	656 12 2	..	179 5 8
124	Panga, pargana Chakle Kazirhat.	1,687 1 0	Whole	....	Shibendra Narayan Saha Choudhury and others.	..	457 9 6	..
125	Harinchara, 8 annas, pargana Chakle Kazirhat.	852 5 0	Do. ..	....	Raja Gopal Lal Roy Bahadur.	..	230 14 11	..
130 Res.	Putimari, hisya 14 as. 5 g. 3 c. 3 dt., pargana Chakle Kazirhat.	1,690 2 7	No ..	13 as. 15 g. 1 c. 1 kt. 2 dt. 1 job share of the estate. All other shares besides that specified will be excluded from the sale.	Maulvi Syed Fazlur Rahman and others.	1,457 12 7	..	137 13 0
133	Baragachha O'goyraha, pargana Chakle Kazirhat.	933 15 4	Whole	....	Raja Gopal Lal Roy Bahadur.	..	252 12 10	..
137	Ramnagar, pargana Chakle Kazirhat.	1,341 15 1	Do. ..	....	Ditto ..	..	363 11 8	..
145 Res.	Ramkala, pargana Chakle Kazirhat.	1,659 11 9	No ..	10 as. 2 p. share of the estate.	Khodeja Khatun Bibi and others.	1,059 9 11	..	140 0 6
145/1	Ditto ..	1,659 11 9	No ..	5 as. 10 p. share of the estate. All other shares besides that specified will be excluded from the sale	Feshru Mohammad Shaha Choudhury and others.	605 1 10	..	169 0 1
147 Res.	Shakhati O'goyraha, pargana Tepa.	2,163 0 1	No ..	10 as. 8 p. share of the estate. All other shares besides that specified will be excluded from sale.	Jatindra Mohan Roy Choudhury and others.	1,442 0 1	..	146 9 6
156	Udashi, hisya 8 annas, pargana Udashi.	2,475 10 5	Whole	....	Raja Gopal Lal Roy Bahadur. ..	..	670 0 6	..
164	Kundi, hisya 1 a. 5 g., pargana Kundi	3,196 14 0	Do. ..	....	Kshitish Chandra Acharyya Chowdhury	..	865 3 7	..

Tauzi No.	Name of mahal and pargana.	Sadar jama of whole estate.	Whether the whole estate is to be sold.	If only a share is to be sold, specification of such share or shares.	Names of proprietors of property to be sold.	If only a share is to be sold, the sadar jama of such share	If the whole estate is to be sold the arrears due from it.	If only a share is to be sold, the arrears due from it.
1	2	3	4		6	7	8	9
		Rs. as. p.				Rs. as. p.	Rs. as. p.	Rs. as. p.
166	Chandanpat O'goyraha, pargana Kundi.	2,869 8 7	Whole ..	....	Brindaban Chandra Ray Chowdhury.		778 10 8	..
170	Panbari O'goyraha, pargana Kundi.	623 9 2	Do. ..	....	Mrityunjoy Ray Chowdhury and others, sebait of Shyama Sundari Thakurani.	..	169 3 4	..
176	Maymantapur, hisya 8 annas, pargana Maymantapur.	1,048 8 10	Do. ..	....	Raja Gopal Lal Roy Bahadur.	..	350 14 11	..
206	Lakshmanpur, hisya 8 annas, pargana Swaruppur.	1,013 13 10	Do. ..	....	Bejoy Nath Ray Chowdhury.	..	211 0 3	..
211	Durgapur O'gayraha, pargana Fatezangpur.	1,223 7 5	Do. ..	....	Maulvi Syed Fazle Rahim and others.	..	367 15 11	..
223	Kurshikhamar O'goyraha, hisya 5as. 11p. 5kt., pargana Payrabund.	943 1 4	Do. ..	....	Abezannessa Khatun Chowdhurani and others.	..	326 6 4	
229	Ambari O'goyraha, pargana Peri.	806 14 6	Do. ..	....	Raja Gopal Lal Roy Bahadur.	..	288 0 0	..
232 Res.	Chak Gopal O'goyraha, pargana Sarhatta.	1,402 4 11	No ..	5as. 6g. 2c. 2kt. share of mauza Ekdala, group B. 11gds. 3c. 1kt. 2job share of mauza Ekdala, group C. 3as. 11g. 1kt. 1dt. share of mauza Ekdala, group D. 1a. 9g. 2c. 1kt. 1dt. 2 job share of mauza Ekdala, group E.	Indumati Debi and others.	155 11 7	..	39 12 0
232/1	Ditto ..	1,402 4 11	No ..	16 annas share of mauza Nurpur, group A. 10as. 1g. 1c. 2kt. 1½dt. share of mauza Nurpur, group C. 10as. 13g. 1c. 1kt. share of mauza Nurpur, group E.	Suresh Chandra Sen Gupta and others.	934 14 0	..	245 5 5
232/4	Ditto ..	1,402 4 11	No ..	5 as. 6 g. 2 c. 2 kt. share of mauza Ekdala, group B.	Ananta Kumar Roy, guardian of Amal Kumar Roy.	16 8 9	..	8 1 7
232/7	Ditto ..	1,402 4 11	No ..	5 as. 6 g. 2 c. 2 kt. share of mauza Ekdala, group B. 1 a. 15 g. 2 c. 2 dt. share of mauza Ekdala, group C. 5 as. 6 g. 2 c. 2 kt. share of mauza Ekdala, group D. 1 a. 15 g. 3 c. 2 dt. share of mauza Ekdala, group E. All other shares besides that specified will be excluded from the sale.	Karuna Kanta Roy and others.	155 13 0	..	40 14 4
243	Mithipur O'goyraha, pargana Barabila.	4,407 0 0	Whole	....	Jatindra Mohan Roy Choudhury.	..	366 10 6	..
245/2	Badalkhan O'goyraha, hisya 9 as. 6 g., pargana Amdahar.	3,264 3 6	No ..	4 as. 6 p. share of the estate. All other shares besides that specified will be excluded from the sale.	Protap Chandra Choudhury and others.	918 1 0	..	289 7 7
247	Putimari O'goyraha, pargana Andua.	3,279 12 4	Whole	....	Raja Gopal Lal Roy Bahadur.	..	1,088 0 0	..
249/2	Durgapur Chak O'goyraha, hisya 7 as. 10 g., pargana Sarhatta.	1,892 15 8	No ..	1 a. 8 g. 1 c. 2 kt. ½ kag share of mauza Durgapur Chak, groups A, B, C.	Md. Nural Islam and others.	168 3 7	..	56 4 6
249/3	Ditto ..	1,892 15 8	No ..	5 as. 4 g. 1 c. ½ kt. share of mauza Durgapur Chak, groups A, B, C.	Abul Fazal Choudhury.	617 1 3	..	205 10 8
249/4	Ditto ..	1,892 15 8	No ..	1a. 5g. 2c. share of mauza Durgapur Chak, groups A, B, C.	Ditto ..	71 7 9	..	23 11 4
249/5	Ditto ..	1,892 15 8	No ..	1a. 5g. 2c. share of mauza Durgapur Chak, groups A, B, C.	Ditto ..	50 4 9	..	16 11 8

Tauzi No.	Name of mahal and pargana.	Sadar jama of whole estate.	Whether the whole estate is to be sold.	If only a share is to be sold, specification of such share or shares.	Name of proprietors of property to be sold.	If only a share is to be sold, the sadar jama of such share.	If the whole estate is to be sold, the arrears due from it.	If only a share is to be sold, the arrears due from it.
1	2	3	4	5	6	7	8	9
		Rs. a. p.				Rs. as. p.	Rs. as. p.	Rs. as. p.
249/6	Durgapur, Chak O'goyraha, hisya 7 as. 10 g., pargana Sarhatta.	1,892 15 8	No ..	7as. 7g. 2c. share of mauza Durgapur Chak, groups A, B, C.	Muzaffar Hossain Khan Choudhury.	296 4 3	..	98 15 3
249/8	Ditto ..	1,892 15 8	No ..	1a. 6g. 1c. share of mauza Durgapur Chak, groups A, C. All other shares besides that specified will be excluded from the sale.	Hafisuddin Mia Talukdar.	89 0 0	..	29 10 7
261	Fulchowki O'goyraha, pargana Sarhatta.	1,379 7 9	Whole	.. .	Kali Kumar Saha	..	86 2 4	
265 Res.	Chapra O'goyraha, parganas Chakle Kazirhat, Fatepur, Bodapurbabhag, parganas Basatti, Chakle Kakina, pargana Udashi.	8,936 8 10	No ..	12 annas share of mauza Mahabat, group A.	Manir Uddin Ahmad and others.	444 0 0	..	11 11
265/11	Ditto ..	8,936 8 10	No ..	16 annas share of mauza Ramdakua, group F.	Raja Gopal Lal Roy Bahadur.	634 2 0	..	168 14 7
265/14	Ditto ..	8,936 8 10	No ..	8 annas share of mauza Chhinai, group H.	Khan Sahib Md. Khaimuddin Choudhury.	335 8 1	..	88 9 8
265/15	Ditto ..	8,936 8 10	No ..	4 annas share of mauza Chhinai, group H.	Ditto ..	167 12 1	..	44 12 1
265/16	Ditto ..	8,936 8 10	No ..	4 annas share of mauza Chhinai, group H. All other shares besides that specified will be excluded from the sale.	Ditto ..	167 12 2	..	17 7 11
318 Res.	Sangalsi, pargana Chakle Kazirhat.	1,027 3 0	No ..	8 annas share of the estate	Brindaban Chandra Ray, Niranjan Ray and others.	513 9 6	..	114 11 2
318/1	Ditto ..	1,027 3 0	No ..	8 annas share of the estate. All other shares besides that specified will be excluded from the sale.	Subasini Majumdar and others.	513 9 6	..	114 8 2
526	Muradpur Kharda O'gayraha, hisya 8 annas, pargana Payraband.	2,532 15 6	Whole	....	Raja Gopal Lal Roy Bahadur.	..	686 6 5	..
527	Hamidpur O'gayraha, Motalak Jot Gokul, hisya 8 annas, pargana Payraband.	1,532 4 6	Do. ..	....	Ditto ..	..	415 7 5	..
648	Osmanpur O'gayraha, hisya 3 as. 8p., pargana Barabila.	2,934 5 6	Do. ..	....	Kalipada Chakravarty.	..	977 12 5	..
654 Res.	Ramchandrapur, pargana Bairisakhipela.	2,371 12 11	No ..	2 as. 13 g. 2½ kg. share of the estate.	Bireswar Chatterjee, common manager.	394 6 9	..	142 3 3
654/2	Ditto ..	2,371 12 11	No ..	1 a. 12 g. 2 c. share of the estate.	Ditto ..	240 14 3	..	86 14 9
654/3	Ditto ..	2,371 12 11	No ..	4 as. 18 g. share of the estate.	Ditto ..	726 5 11	..	262 0 4
654/4	Ditto ..	2,371 12 11	No ..	4 as. 14 g. 1½ c. share of the estate.	Ditto ..	698 13 3	..	251 15 6
654/5	Ditto ..	2,371 12 11	No ..	2 as. 2 g. share of the estate. All other shares besides that specified will be excluded from the sale.	Ditto ..	311 4 9	..	11 3 5
668/1	Siksahar, pargana Siksahar.	3,099 10 0	No ..	8 as. 10 g. share of mauza Amlagachhi, groups A to L.	Gaibandha Loan Office.	1,647 4 5	..	477 11 7
668/5	Ditto ..	3,099 10 0	No ..	1 a. 15 g. 1 kg. 5 til share of mauza Amlagachhi, group A. 1 a. 10 g. 2 kg. share of mauza Amlagachhi, group B. 1 a. 10 g. share of mauza Amlagachhi, groups C, D, F, G, H. 3 as. 9 g. share of mauza Amlagachhi, group E, I to L. All other shares besides that specified will be excluded from the sale.	Charu Chandra Ray and others.	559 6 9	..	162 4 0

Tauzi No.	Name of mahal and pargana.	Sadar jama of whole estate.	Whether the whole estate is to be sold.	If only a share is to be sold, specification of such share or shares.	Names of proprietors of property to be sold.	If only a share is to be sold, the sadar jama of such share.	If the whole estate is to be sold, the arrears due from it.	If only a share is to be sold, the arrears due from it.
1	2	3	4		6	7	8	9
		Rs. as. p.				Rs. as. p.	Rs. as. p.	Rs. as. p.
720	Lalbari kismat pargana, hisya 4 as. 10 g., pargana Lalbari.	1,135 14 6	Whole	....	Mozahar Uddin and others.	..	198 11 6	..
721	Lalbari kismat pargana, hisya 4 annas, pargana Lalbari.	1,009 11 3	Do. ..	....	Muhammad Esarat Ulla Chowdhury and others.	..	282 4 0	..
793	Nagendra Nath Mukherjee, pargana Kazirhat.	1,120 1 11	Do. ..	....	Nagendra Nath Mukherjee.	..	303 0 9	..
794	Debendra Nath Mukherjee, pargana Kazirhat.	1,120 1 11	Do. ..	....	Debendra Nath Mukherjee.	..	303 0 9	..
795	Amala Prosad Mukherjee O'goyraha, pargana Kazirhat.	1,120 1 11	Do. ..	....	Amala Prosad Mukherjee and others.	..	303 0 9	..
796	Kali Sadhan Mukherjee, O'goyraha, pargana Kazirhat.	1,120 1 11	Do. ..	....	Kali Sadhan Mukherjee and others.	..	303 0 9	..
800	Joga Maya Dasi O'goyraha, pargana Kazirhat.	770 2 4	Do. ..	....	Bhujendra Nath Biswas and others.	..	208 5 10	..
801	Jagannath Khan, pargana Kazirhat.	1,588 6 4	Do. ..	....	Sourendra Nath Khan and others.	..	429 11 11	..

The abovementioned estates are being advertised for sale for instalments of revenue which were due on or before the 30th Agrahayan, 1341 B.S., of which the latest date of payment was 12th January 1935 A.D.

Rangpur, the 5th March 1935.

N. M. AYYAR, Collector.

Notification.

NOTICE is hereby given, under sections 6 and 13, Act XI of 1859, that the undermentioned estates and shares of estates in the district of Birbhum will be put up for sale at the office of the Collector of that district on the 26th March 1935, at 12 noon, for arrears of revenue and other demands which by law are realisable as arrears of land revenue.

When in columns 5, 7 and 9 of the following statement it is stated that only a share is to be sold, it is to be understood that a separate account is kept for that share :—

Tauzi No.	Name of mahal and pargana.	Sadar jama of whole estate.	Whether the whole estate is to be sold.	If only a share is to be sold, specification of such share or shares.	Names of proprietors of property to be sold.	If only a share is to be sold, the sadar jama of such share.	If the whole estate is to be sold the arrears due from it.	If only a share is to be sold, the arrears due from it.
1	2	3	4	5	6	7	8	9
		Rs. a. p.				Rs. a. p.	Rs. a. p.	Rs. a. p.
2	Sahalampur, pargana Sahalampur.	52,008 5 0	..	Group I—8gds. 3karas 1 kranti 13tils share of mauzas Agowa and others. Group II—12 as. 6 gds. 2 karas 2 krantis share of mauzas Kapastari and others. Group—III 8gds. 3 karas 1 kranti 13 tils share of mauzas Pirpur, etc. Group IV—8gds. 3 karas 1 kranti 13 tils share of mauzas Patlapur, etc. Group V—8gds 3 karas 1 kranti 13tils share of mauzas Belsara, etc. Group VI—8gds. 3 karas 1 kranti 13 tils share of mauzas Bonbandhura, etc. Group VII—8 gds. 3 karas 1 kranti 13 tils share of mauza Gaura. Group VIII—8 gds. 3 karas 1 kranti 13 tils share of mauzas Kanalpur, etc., 12 annas share of mauza Loba in residuary excepting separate accounts Nos. 4 to 11. All other shares than that specified will be excluded from the sale.	Shyamapada Basu and others.	7,645 10 8	..	2,089 10 9
4	Senbhum, pargana Senbhum.	41,132 10 0	..	16 annas share of manzas Binuria and others, 8 annas share of mauzas Chowmondalpur, etc., in separate account No. 1.	Sudhakar Mazumdar.	849 0 8	..	122 11 8
4	Ditto ..	41,132 10 0	..	Group I—5as. 6gds. 2 karas 2 krantis share of mauzas Kankhutia, etc. Groups II and III—5as. 6gds. 2 karas 2 krantis share of mauza Choupahari Jungle. Group IV—5 as. 6 gds. 2 karas 2 krantis share of mauzas Radhanagar, etc. Group XIV—16 annas share of mauzas Jahanabad, etc. Group XV—16 annas share of mauzas Radhanagar, etc., in separate account No. 3.	Subhasini Dasi ..	15,577 2 6	..	1,685 11 8
4	Ditto ..	41,132 10 0	..	Group I—4gds. 1 kara 2 krantis 6 tils share of mauzas Kankhutia, etc. Group II—4 gds. 1 kara 2 krantis 5 tils share of mauzas Choupahari Jungle. Group III—4 gds. 1 kara 2 krantis 7 tils share of mauzas Choupahari Jungle. Group IV—4gds. 1 kara 2 krantis 7 tils share of mauzas Radhanagar, etc. Group V—18gds. 1 kara 1 kranti share of mauzas Adityapur, etc. Group VI—8 annas share of mauzas Nachansaha, etc. Group VII—0 as. 6gds. 2 karas 2 krantis share of mauza Gitgram. Group XIII—4 annas share of mauzas Nurpur, etc. Group XVI—4 annas share of mauzas Chandipur, etc. Group XVII—1gd. 3 karas 2 krantis 8 tils share of mauzas Muluk, etc., in separate account No. 11.	Salla Bala Debi]	1,737 5 6	..	760 0 9

Tauzi No.	Name of mahal and pargana.	Sadar jama of whole estate.	Whether the whole estate is to be sold.	If only a share is to be sold, specification of such share or shares.	Names of proprietors of property to be sold.	If only a share is to be sold, the sadar jama of such share.	If the whole estate is to be sold, the arrears due from it.	If only a share is to be sold, the arrears due from it.
1	2	3	4	5	6	7	8	9
		Rs. a. p.				Rs. a. p.	Rs. a. p.	Rs. a. p.
4	Senbhum, pargana Senbhum.	41,132 10 0	..	Group I—1 a. 15 gds. 2 karas 14tils share of mauzas Kankhutia, etc. Group II—1 a. 15gds. 2 karas 13 tils share of mauzas Choupahari Jungle. Group IV—1a. 15gds. 2 karas 14 tils share of mauzas Radhanagar, etc. Group XXI—4 as. 16gds. share of mauza Hariharpur *alias* Mukunda. Group XXII—16 annas share of mauzas Narayanpur, etc. Group XXIII (*a*)—12 annas share of mauza Rupur in separate account No. 12.	Sarala Bala Sinha	4,950 14 3	..	2,146 6 6
4	Ditto ..	41,132 10 0	..	Group XXIV—16 annas share of mauzas Murandihi, etc., in separate account No. 18.	Rajani Kanta Biswas.	2,689 13 6	..	1,165 9 9
4	Ditto ..	41,132 10 0	..	Group I—1a. 15gds. 2 karas 16 tils share of mauzas Kankhutia, etc. Group II—1a. 15gds. 2 karas 14 tils share of mauza Choupahari Jungle. Group IV—1a. 15gds. 2 karas 14 tils share of mauzas Radhanagar, etc. Group XXII—8 annas share of mauzas Choumondalpur, etc. Group XXI—5 as. 2gds. 2 karas share of mauza Hariharpur *alias* Mukunda. Group XXV—16 annas share of mauza Goltikuri, etc., in separate account No. 20.	Kedar Nath Ghose and others.	1,882 4 4	..	820 0 0
4	Ditto ..	41,132 10 0	..	Group I—5 gds. 3 karas 2 krantis 1 til share of mauzas Kankhutia, etc., 11 gds. 3 karas 1 kranti 4 tils share of mauza Choupahari Jungle. Group III—11 gds. 3 karas 1 kranti 5 tils share of mauza Choupahari Jungle. Group IV— 5 gds. 3 karas 2 krantis 1 til share of mauzas Radhanagar, etc. Group V—1 a. 15 gds. 2 karas 13 tils share of mauzas Adityapur, etc. Group X—16 annas share of mauzas Mahisadal, etc., in separate account No. 25. All other shares than that specified will be excluded from the sale.	Sourindra Narayan Sinha.	1,309 2 6	..	467 4 9
10	Dheka, pargana Swarupsing.	16,707 4 0	Whole estate, 16 annas share.	....	Mahanta Srimat Banwari Mukunda Das Nandi Dalal.	..	3,200 0 0	..
14	Bhurkunda, pargana Bhurkunda.	15,142 9 0	..	2 as. 13 gds. 1 kara 1 kranti share in separate account No. 1. All other shares than that specified will be excluded from the sale.	Birendra Nath Mustafi and others.	2,523 11 6	..	546 9 4
16	Maheswarpur, pargana Senbhum.	12,897 8 7	..	Group XII—4 annas share of mauzas Baharampur, Palsa, etc., in separate account No. 8. All other shares than that specified will be excluded from the sale.	Charu Chandra Sinha and others.	758 7 0	..	331 13 0
18	Kalika Krishnanagar, pargana Joynajlal.	6,234 6 0	Whole estate, 16 annas share.	....	Kumar Promotha Nath Malia Bahadur and others.	..	584 10 5	..
19	Kuniara, pargana Ichhapukhuria.	5,695 14 0	..	2 as. 6 gds. 2 karas 2 krantis share of mauzas Bujuruk Baro, etc., 2 as. 8 gds. 1 kranti 10 tils share of mauza Daurka, 18 gds. 3 karas 2 krantis 10 tils share of mauza Barowan, etc., in separate account No. 2. All other shares than that specified will be excluded from the sale.	Basanta Kumari Debi (trustee).	789 14 8	..	350 6 6

Tauzi No.	Name of mahal and pargana.	Sadar jama of whole estate.	Whether the whole estate is to be sold.	If only a share is to be sold, specification of such share or shares.	Names of proprietors of property to be sold.	If only a share is to be sold, the sadar jama of such share.	If the whole estate is to be sold, the arrears due from it.	In only a share is to be sold, the arrears due from it.
1	2	3	4	5	6	7	8	9
		Rs. a. p.				Rs. a. p.	Rs. a. p.	Rs. a. p.
20	Panchpara, pargana Ichhapukhuria.	4,062 5 0	..	9 as. 4 gds. 6 tils share of mauzas Purba Durgapur, etc., in residuary excepting separate account Nos. 1 to 5.	Maha Bharat Dutta.	2,336 2 6	..	316 12 3
20	Ditto ..	4,062 5 0	..	2 as. 19 gds. 2 karas share in separate account No. 3. All other shares than that specified will be excluded from the sale.	Suresh Chandra Dutta.	755 5 6	..	221 15 6
21	Balta, pargana Joynujial.	10,850 7 0	..	2 as. 10 gds. share of mauzas Karchadihi, etc., 1 a. 13 gds. 1 kara 1 kranti share of mauzas Khandagram, etc., in separate account No. 8. All other shares that that specified will be excluded from the sale.	Harihar Nath Das (sebait).	891 2 1	..	384 14 4
22	Sainthia, pargana Moureswarsabek.	15,151 5 0	..	2 annas share in residuary excepting separate account Nos. 1 to 14.	Hari Charan Ghose and others.	1,893 0 8	..	274 6 10
22	Ditto ..	15,151 5 0	..	2 annas share in separate account No. 4.	Panchanan Ghose	1,894 12 3	..	828 12 6
22	Ditto ..	15,151 5 0	..	13 gds. 1 kara 1 kranti share in separate account No. 6.	Sarat Kumar Ghose.	631 5 0	..	276 4 0
22	Ditto ..	15,151 5 0	..	13 gds. 1 kara 1 kranti share in separate account No. 12.	Tarapada Ghose	631 5 0	..	276 4 0
22	Ditto ..	15,151 5 0	..	13 gds. 1 kara 1 kranti share in separate account No. 14. All other shares than that specified will be excluded from the sale.	Prosad Chandra Ghose.	631 5 0	..	276 4 0
25	Indus, pargana Kutubpur.	5,687 2 8	..	8 annas share in separate account No. 1. All other shares than that specified will be excluded from the sale.	Kali Das Das ..	2,843 9 5	..	629 2 1
26	Krishnanagar, pargana Barbaksingh.	5,894 9 6	..	14 as. 10 gds. 1kara 10 tils share in residuary excepting separate account Nos. 1 and 2. All other shares than that specified will be excluded from the sale.	Bipin Behari Sarkar and others.	4,894 5 0	..	39 1 4
28	Dabuk, pargana Swarupsing.	1,395 10 0	..	7 as. 10 gds. share in residuary excepting separate account No. 1.	Nalini Ranjan Sinha and others.	654 3 0	..	211 8 6
28	Ditto ..	1,395 10 0	..	8 as. 10 gds. share in separate account No. 1.	Kala Chand Das and others.	741 7 0	..	136 2 6
31	Purandarpur, pargana Purandarpur.	6,299 6 0	..	2 as. 10 gds. share in separate account No. 1.	Kumar Brahma Nr. Chakrabarty.	984 4 5	..	425 9 0
31	Ditto ..	6,299 6 0	..	2 annas share in separate account No. 3.	Ram Ranjan Hati and others.	787 7 10	..	340 4 4
31	Ditto ..	6,299 6 0	..	2 as. 10 gds. share in separate account No. 6. All other shares than that specified will be excluded from the sale.	Ram Ranjan Mukherjee.	984 4 5	..	325 5 5
66	Murundi, pargana Kutabpur.	1,531 15 0	..	5 as. 6 gds. 2 karas 2 krantis share in residuary excepting separate account Nos. 1 and 2.	Suprobhat Chandra and others.	510 10 4	..	138 10 4
66	Ditto ..	1,531 15 0	..	5 as. 6 gds. 2 karas 2 krantis share in separate account No. 1.	Dharma Das Chandra and others.	510 10 4	..	138 10 4
66	Ditto ..	1,531 15 0	..	5 as. 6 gds. 2 karas 2 krantis share in separate account No. 2.	Dhanapati Chandra and others.	510 10 4	..	138 10 4
75	Turigram, pargana Sahajadpur.	1,508 0 0	..	14 as. 9 gds. 1 kara 1 kranti share in residuary excepting separate account No. 1. All other shares than that specified will be excluded from the sale.	Abedan Nessa Bibi and others.	1,363 7 6	..	96 15 11

Tauzi No.	Name of mahal and pargana.	Sadar jama of whole estate.	Whether the whole estate is to be sold.	If only a share is to be sold, specification of such share or shares.	Names of proprietors of property to be sold.	If only a share is to be sold, the sadar jama of such share.	If the whole estate is to be sold, the arrears due from it.	If only a share is to be sold, the arrears due from it.
1	2	3	4	5	6	7	8	9
		Rs. a. p.				Rs. a. p.	Rs. a. p.	Rs. a. p.
84	Mandari, pargana Khargram.	719 5 0	Whole estate, 16 annas share.	....	Maulvi Golam Gous and others.	..	301 0 0	..
89	Indus, pargana Kutubpur.	3,876 4 0	..	9 as. 10 gds. share of mauzas Indus and Annahar, 10as. 13 gds. 1 kara. 1 kranti share of mauza Saripa, 16 annas share of mauzas, Tentulbandh and Sripatipur, 1 a. 12 gds. 2 karas share of mauzas Maheshpur, Purba Nowapara, Purbakadipur and Lohadda in residuary share excepting separate account Nos. 6 and 8 to 13. All other shares than that specified will be excluded from the sale.	Sukumar Mukherjee and others.	913 1 11	..	28 13 6
90	Bousanka, pargana Joynujial.	3,772 3 5	Whole estate, 16 annas share.	....	Ram Ranjan Hajra and others.	..	1,626 4 8	..
94	Gokulata, pargana Gokulata.	3,250 14 0	..	8 annas share in separate account No. 1.	Chinmoyee Debi and others.	1,625 7 0	..	624 15 [illegible]
94	Ditto ..	3,250 14 0	..	3 as. 15 gds. 2 karas 13 tils share in separate account No. 4. All other shares than that specified will be excluded from the sale.	Minor Dwijendra Kumar Roy and others.	767 9 1	..	295 1 9
103	Kharua, pargana Khatanga.	1,383 3 0	..	5 as. 17 gds. 2 krantis share in residuary excepting separate account Nos. 1 to 7 and 10 to 11 and 12.	Bepin Behari Chatterjee and others.	504 6 9	..	5 0 9
107	Punur, pargana Akbarsahi.	1,176 13 0	..	7 as. 18 gds. 3 karas share in residuary excepting separate account Nos. 5 and 6. All other shares than that specified will be excluded from the sale.	Panchanan Bhattacharjee and others.	583 12 10	..	158 11 8
109	Daurka, pargana Ichhapukhuria.	1,803 1 0	..	5 annas share of mauzas Sonachitura and Monachitura, 16 annas share of mauza Sitapur, 5 as. 4 gds. 1 kara 2 krantis 15 tils share of mauza Daurka in residuary excepting separate account Nos. 1 and 2. All other shares than that specified will be excluded from the sale.	Sailendra Kumar Roy and others.	582 11 0	..	232 14 6
111	Rasowan, pargana Barra.	4,173 14 1	..	5 as. 19 gds. 3 karas 1 kranti 5 tils share in residuary excepting separate account Nos. 1 to 6 and 8 to 11.	Sasthi Kinkar Banerjee and others.	1,562 14 2	..	194 15 5
111	Ditto ..	4,173 14 1	..	2 as. 5 gds. share in separate account No. 1.	Tara Sankar Banerjee and others.	588 1 1	..	86 1 0
111	Ditto ..	4,173 14 1	..	2 annas share in separate account No. 6. All other shares than that specified will be excluded from the sale.	Tara Prasanna Mukherji and others.	521 12 7	..	76 15 0
114	Bongram, pargana Barbaksing.	2,526 4 0	..	3 as. 4 gds. share in residuary excepting separate account Nos. 1 to 10.	Provash Ch. Mitra	505 3 11	..	218 3 1
114	Ditto ..	2,526 4 0	..	3 as. 4 gds. share in separate account No. 2. All other shares than that specified will be excluded from the sale.	Khitish Ch. Mitra and others.	505 4 0	..	48 3 0
125	Kanutia, pargana Swarupsing.	1,640 6 0	Whole estate, 16 annas share.	....	Gobinda Chandra Mazumdar and others.	..	712 0 0	..
143	Shyamsundarpur, pargana Barbaksing.	2,113 13 0	..	4 as. 6 gds. 1 kara share in residuary excepting separate account Nos. 1 and 2. All other shares than that specified will be excluded from the sale.	Benoy Krishna Chaudhuri.	569 11 9	..	140 3 0

Tauzi No.	Name of mahal and pargana.	Sadar jama of whole estate.	Whether the whole estate is to be sold.	If only a share is to be sold, specification of such share or shares.	Names of proprietors of property to be sold.	If only a share is to be sold, the sadar jama of such share.	If the whole estate is to be sold, the arrears due from it.	If only a share is to be sold, the arrears due from it.
1	2	3	4	5	6	7	8	9
		Rs. a. p.				Rs. a. p.	Rs. a. p.	Rs. a. p.
153	Bahiri, pargana Barbakshing.	2,014 8 0	..	18 as. 3 gds 1 kara 1 kranti share in residuary excepting separate account Nos. 1 and 2. All other shares than that specified will be excluded from the sale.	Tulusi Ram Choudhuri and others.	1,657 12 2	..	0 8 8
158	Kadipur, pargana Kutubpur.	851 4 0	Whole estate, 16 annas share.	....	Srish Chandra Chaudhuri and others.	..	368 0 0	..
159	Mostuli, pargana Kutubpur.	886 7 0	...	11 as. 10 gds. share in residuary excepting separate account No. 1. All other shares than that specified will be excluded from the sale.	Hari Ranjan Saha and others.	637 2 0	..	83 6 9
167	Januri, pargana Khatanga.	978 11 0	Whole estate, 16 annas share.	....	Roy Kalika Nanda Mukherjee Bahadur and others.	..	422 11 0	..
172	Majhigram, pargana Khatanga.	3,422 4 0	..	12 annas share in residuary excepting separate account No. 1.	Munshi Golam Gous and others.	2,566 11 0	..	564 0 0
172	Ditto ..	3,422 4 0	..	4 annas share in separate account No. 1.	Shyama Pada Roy and others.	855 9 0	..	70 8 0
173	Rangtara, pargana Swarupsing.	896 8 0	..	13 as. 16 gds. 2 karas 2 krantis share in residuary excepting separate account No. 2. All other shares than that specified will be excluded from the sale.	Ashutosh Ghosal and others.	775 1 7	..	336 5 2
212	Shyambati Sashpur, pargana Swarupsing.	1,176 13 0	..	11 as. 7 gds. 2 karas 13 tils share in residuary excepting separate account No. 1. All other shares than that specified will be excluded from the sale.	Panchanan Choudhuri and others.	836 13 6	..	178 1 9
230	Nimtikuri, pargana Haripur.	602 10 0	Whole estate, 16 annas share.	....	Mahesh Ch. Dutta and others.	..	61 7 7	..
240	Damdama, pargana Alinagar.	1,482 11 0	..	6 as. 5 gds. share of mauzas Abadanga, Damdama, Nijuri, Maligram, Kendua-julai, Hatora, Sangra, Purpaldihi, Tentuldihi, Patharghata, Layekpur and Trilouraripur in separate account No. 1. All other shares than that specified will be excluded from the sale.	Shyama Pada Roy and others.	579 2 10	..	251 2 9
451	Bakhul, pargana Kutubpur.	2,806 5 0	..	6 annas share in residuary excepting separate account Nos. 1 to 7.	Dharani Dhar Banerjee and others.	1,062 4 5	..	300 8 7
451	Ditto ..	2,806 5 0	..	4 as. 1 kara share in separate account No. 7. All other shares than that specified will be excluded from the sale.	Dharani Dhar Banerjee.	708 12 4	..	241 9 1
551	Jotemusa, pargana Joynujial.	1,013 10 0	..	16 annas share of mauzas Chhatarbandi, Simulia, Bheramari, Salan, Sunutia and Chhatarbandi, 3 as. 13 gds. 3 karas share of mauzas Donaipur, Ekdala, Ulandi, Arajl Brahmandihi, Chhatarbandi and Bheramari in residuary excepting separate account Nos. 5 to 11. All other shares than that specified will be excluded from the sale.	Syed Saha Mahammad Abdul Hafiz and others.	600 11 0	..	221 4 10
580	Sahapur, pargana Swarupsing.	1,967 11 0	Whole estate, 16 annas share.	....	Rajendra Nath Pal and others.	..	878 0 0	..

Tauzi No.	Name of mahal and pargana.	Sadar jama of whole estate.	Whether the whole estate is to be sold.	If only a share is to be sold, specification of such share or shares.	Names of proprietors of property to be sold.	If only a share is to be sold, the sadar jama of such share.	If the whole estate is to be sold, the arrears due from it.	If only a share is to be sold, the arrears due from it.
1	2	3	4	5	6	7	8	9
		Rs. a. p.				Rs. a. p.	Rs. a. p.	Rs. a. p.
619	Kalikapur, pargana Nowanagar.	2,329 15 0	..	8 as. 19 gds. 1 kara 2 krantis 7 tils share in residuary excepting separate account Nos. 1 to 3. All other shares than that specified will be excluded from the sale.	Mahammad Hajarat Ali Biswas and others.	1,306 8 9	..	252 13 7
623	Gopalpur Daribhadrapur, pargana Dhawa.	535 4 6	Whole estate, 16 annas share.	....	Jatindra Nath Mukherjee.	..	230 5 10	..
657	Basowan, pargana Kumarprotap.	3,572 8 8	..	3 as. 15 gds. share in separate account No. 4. All other shares than that specified will be excluded from the sale.	Ajibatan Nessa Bibi and others.	837 5 6	..	256 6 0
666	Sanskar Bhadrapur, pargana Dhawa.	7,477 8 11	..	11 annas share of mauzas Karamji, Pachhim Gopalpur, Radhagobindapur, Kanior, Bhabanipur, Kalitha, Math Kalitha Boria, Atgran., Makrampur, Radipur Bhadrapur, Purba Gopalpur, Akalipur, Purba Lakhinarayanpur, Goswainpur, Jostha Bhabanipur, Bara, Rouha, Sarbasidanga, Simlandi, Hajarpur, Bandhkhala, Sitalgram, Raypur, Kalipur, Araji Madhupur, Protappur, Chandpara, Sanskar, Sungai and Gopinathpur in residuary excepting separate account Nos. 1 and 2. All other shares than that specified will be excluded from the sale.	Kumar Debendra Nath Roy.	5,140 8 8	..	2,239 13 3
928	Simgram, pargana Nowanagar.	524 14 0	Whole estate, 16 annas share.	....	Mirja Lutfa Ali and others.	..	129 0 0	..
992	Taraf Jagadwispur, pargana Kumarprotap.	1,062 10 4	Do.	....	Mohini Mohan Ghosal.	..	187 9 11	..
999	Birori, pargana Nowanagar.	632 8 11	Do.	....	Nitya Kali Dasya.	..	396 12 10	..
1003	Raghunathpur, pargana Sahajadpur.	717 4 2	Do.	....	Sabaran Nessa Bibi and others.	..	237 13 11	..
1005	Ramrampur, pargana Kumarprotap.	1,099 0 0	Do.	....	Maulvi Muhammad Badarroddoza and others.	..	221 1 6	..
1219	Pakurhana, pargana Barbaksing.	1,898 7 5	..	4 as. 16 gds. 2 karas 2 krantis share in separate account No. 1. All other shares than that specified will be excluded from the sale.	Shyam Sundar Mustafi and others.	573 7 11	..	16 6 4
1221	Taraf Belhatti, pargana Barbaksing.	2,218 0 7	Whole estate, 16 annas share.	....	Dwaraka Nath Telang, and others, general secretary.	..	583 7 11	..

These estates are being advertised for sale for instalments of revenue due on or before the 30th Agrahayan, 1341 B.S., of which the latest date of payment was 12th January 1935.

Suri, the 5th March 1935.

[ILLEGIBLE], *for* Collector.

Notification A.

NOTICE is hereby given, under sections 6 and 13 of Act XI of 1859 that the undermentioned estates or shares of estates in the district of Midnapore will be put up to sale at the office of the Collector of that district on the 25th March 1935, at 12 noon, for arrears of revenue which was due on or before the 30th Agrahayan 1341 B.S. and of which the latest date of payment was on the 12th January 1935 and other demands which by law are realizable as arrears of land revenue.

When in columns 5, 7 and 9 of the following statement it is stated that only a share is to be sold, it is to be understood that a separate account is kept for that share :—

Tauzi number.	Name of mahal and pargana.	Sadar jama of whole estate.	Whether the whole estate is to be sold.	If only a share is to be sold, specification of such share or shares.	Names of proprietors of property to be sold.	If only a share is to be sold, the sadar jama of such share.	If the whole estate is to be sold, the arrears due from it.	If only a share is to be sold, the arrears due from it.
1	2	3	4	5	6	7	8	9
		Rs. a. p.				Rs. a. p.	Rs. a. p.	Rs. a. p.
301	Pargana Batitaki, mahal Gumai.	653 0 1	Entire	....	Santosh Jamini Dassi and others, auction purchaser Surendra Nath Setua.	..	275 0 2	..
312	Pargana Batitaki, mahal Palgeria.	630 1 7	Do. ..	....	Sree Kisan Darghar and Kedar Nath Pal and another, sebaits of Lakshmi Janardanjew Thakur.	..	217 10 0	..
389	Pargana Bhuianmutha, mahal Paschim Masaria *alias* Betalghatial.	3,620 11 8	..	Residuary Account— 4as. 8gds. 3c. 1kt. 2dt. share of mauza Bakibarh. 5as. 0gds. 2c. 2kt. share of mauzas Betal and Khatian. 2as. 13gds. 1c. 1kt. share of mauzas Chinadari, Dwarikapur, Katgechia, Kotebarh, Masaria Paschim, Mirachak and Simulya Madhya. 4as. 8gds. 3c. 1kt. 1dt. share of mauzas Kishorepur, Khatian and Masariapurba. All other shares than that specified will be excluded from sale.	Nagendra Kumar Hazra and others.	1,307 9 0	..	154 7 5
440	Pargana Chandrakona, mahal Baraboria.	10,025 8 5	..	S. A. No. 2—16 annas share of mauzas Kamargeria and Kamargeria Kismat. All other shares than that specified will be excluded from sale.	Khudiram Mukhapadhya and others.	1,813 0 6	..	679 5 0
478	Pargana Chandrakona, mahal Kuldaha.	10,784 7 2	..	S. A. No. 2—2as. 2gds. 2c. 2kt. share of the mahal. All other shares than that specified will be excluded from the sale.	Khirode Prosad Chakravarty and others.	1,457 14 10	..	104 11 5
510	Pargana Chandrakona, mahal Rameswarpur.	11,594 11 8	Entire	....	Manahar Lal Seal	..	4,326 11 8	..
548	Pargana Chetua, mahal Gangpur.	8,143 13 10	Do. ..	....	Janakilal Khandelwala.	..	3,058 12 0	..
558	Pargana Chetua, mahal Gaura.	4,449 9 11	..	Residuary Account— 5as. 11gds. 2c. 1kg. 13til share of mauzas Gaura Kuchmari and Jagatchak. 5as. 9gds. 2c. 3kg. 4til share of mauza Nandanpur. 5as. 11gds. 2c. 1kg. 16til share of mauza Jalalpur. 4as. 11gds. 2c. 1kg. 17 $\frac{1}{24}$ til. 1c. 1kg. 1 til share of mauza Singhachak. 4as. 11gds. 2c. 1kg. 17 $\frac{1}{24}$ til ; 2c. 1til share of mauza Jotegobordhan. 5 as. 9 gds. 2 c. 3 kgs. 8 $\frac{1}{2}$ tils. 1 c. 7 tils. 1 c. of mauza Kismat Salia. 5 as. 9 gds. 2 c. 3 kgs. 7 $\frac{1}{2}$ til. 3 c. 7 til. 1 c. share of mauza Chakdinu. 3 as. 4 gds. 2 c. 2 kg. 14 $\frac{1}{2}$ til 1 c. 2 kg. 9 til 1 c. 3 kg. share of mauza Barbharatpur. All other shares than that specified will be excluded from sale.	Debendranath Ghose, auction purchaser Probodh Chandra Chaudury, R. A. No. 2.	1,541 1 10	..	575 4 0

Tauzi number.	Name of mahal and pargana.	Sadar jama of whole estate.	Whether the whole estate is to be sold.	If only a share is to be sold, specification of such share or shares.	Names of proprietors of property to be sold.	If only a share is to be sold, the sadar jama of such share.	If the whole estate is to be sold, the arrears due from it.	If only a share is to be sold, the arrears due from it.
1	2	3	4	5	6	7	8	9
		Rs. a. p.				Rs. a. p.	Rs. a. p.	Rs. a. p.
748	Pargana Egrachore, mahal Kasba.	854 9 0	..	Residuary Account—16 annas share of mauzas Alnan, Dabetya, Damodartiram, Giridharpur, Jamgan, Kasba, Kasbapatna, Kamardiha, Kaurda, Laskarpur, Latifabad, Muhammedpur, Neyaribara, Parusattampur, Raghutiran and Saifalchak. 13 as. 2 gds. 1 c. 1 kt. share of mauza Bajarpur. 16 annas share of mauza Satarang. All other shares than that specified will be excluded from sale.	Lalit Mohan Pal and others.	768 7 9	..	75 3 7
937	Pargana Kasijora, mahal Garhpurusattampur *alias* Chaitanyapur.	738 10 8	..	Residuary Account—12 as. 16 gds. share of the estate. All other shares than that specified will be excluded from sale.	Trailakhya Nath Maiti.	590 14 8	..	187 15 5
969	Pargana Kasijora, mahal Kisore Chak.	579 4 5	Entire	....	Lakshmi Janardan Jew, sebait Bishnupada Kole and another.	..	197 5 0	..
1007	Pargana Kasijora, mahal Purba Itara.	13,136 8 8 (including Police).	..	Residuary Account—4 annas share of the mahal. All other shares than that specified will be excluded from sale.	Manahar Lal Seal ..	10,783 11 10 (including Police).	..	3,707 3 8 (including Police).
1030	Pargana Kismat Kasijora, mahal Gopalnagar.	1,511 0 9	..	Residuary Account—5 as. 6 gds. 2 c. 2 kt. share of the estate. All other shares than that specified will be excluded from sale.	Haripada Maiti and another.	503 10 11	..	172 2 10
1039	Ditto ..	1,511 0 9	..	S. A. No. 1.—5 as. 6 gds. 2 c. 2 kt. share of the estate. All other shares than that specified will be excluded from sale.	Bhupati Charan Jana and another.	503 10 11	..	173 0 11
1039	Ditto ..	1,511 0 9	..	S. A. No. 2—5 as. 6 gds. 2 c. 2 kt. share of the estate. All other shares than that specified will be excluded from sale.	Bhubanmohan Jana and others.	503 10 11	..	172 15 10
1048	Pargana Kasijora, mahal Kanakpur, *alias* Narendra Kanakpur.	2,383 13 6 including Police.	..	S. A. No. 12—3 as. 13 gds. 1 c. 1 kt. share of the estate. All other shares than that specified will be excluded from sale.	Fakir Chandra Das and others.	546 4 9 including Police.	..	187 12 7 including Police.
1196	Pargana Kedarkundu, mahal Gogram.	724 12 0	..	Residuary Account—16 annas share of mauzas Dayalpur, Gopinathpur, Hridayramchak, Keutburhi Patgerhe, Rajaramchak, Sagarchak and Sutchhrhachak. All other shares than that specified will be excluded from sale.	Narendra Kumar Nag.	573 13 4	..	0 9 0
1485	Pargana Khandar, mahal Belki *alias* Bar Raghunath.	875 9 3	Entire	....	Rashmoni Atta and others.	..	303 13 3	..
1660	Pargana Khandar, mahal Panchpara.	4,053 11 5	..	S. A. No. 10—2 as. 1 gd. 3 c. 2 kt. share of mauzas Abdulya, Arun, Arunchak, Fatechak, Jamna, Kamalchak and Ranihati. 5 as. 6 gds. 2 c. 2 kt. share of mauzas Barageria, Barampur, Basudebchak, Bhabanichak, Bhisandapur, Dehati, Gourangachak, Jatalia, Jotejan, Kanuchak, Kanua, Khelna, Madhyajetha, Maguria Sana, Norattamchak, Nakpura, Narayan, Bhulanchak, Palaschak, Panchpara, Panisulya, Ramdebchak, Sarupchak, Sankarbarh, Satrangiharibarh, Simlagera, Shyamchakbar, Shyamsundarpur and Trilochanpur.	Dhirendra Nath Ghose and another.	982 11 0	..	337 12 7

Tauzi No.	Name of mahal and pargana.	Sadar jama of whole estate.	Whether the whole estate is to be sold.	If only a share is to be sold, specification of such share or shares.	Names of proprietors of property to be sold.	If only a share is to be sold, the sadar jama of such share.	If the whole estate is to be sold, the arrears due from it.	If only a share is to be sold, the arrears due from it.
1	2	3	4	5	6	7	8	9
		Rs. a. p.				Rs. a. p.	Rs. a. p.	Rs. a. p.
				2 as. 13 gds. 1 c. 1 kt. share of mauzas Basantapur, Binodechak, Gokulpur, Lakshmia, Madhusudanchak, Monoharchak, Palgokul, Pithaichak, Rasikchak, Raichak and Salamdi. 4 as. 15 gds. 1 c. share of mauzas Jorura and Mahadichak. All other shares than that specified will be excluded from sale.				
1995	Pargana Narayangarh Kismat, mahal Khelari *alias* Banpatna.	3,415 1 7	..	Residuary Account—16 annas share of mauzas Balaramchak, Banpatna, Bagberya, Baligerya, Benapuradihi, Bhagabanpur, Chaita, Kuchiabhaluk, Khalaridihi, Nischindipur, Parijatnagar, Purusuttomchak, Prempara, Raghunathpur, Raipur, Sikharpari. 5 as. 6 gds. 2 c. 2 kt. share of mauzas Alichak, Deulabarh, Harachak, Kaitpur, Kalikachak, Madhuchak, Mondalagerha, Madhabchak, Nekragera, Panguchota, Satrughnabarh, Santalchak and Uchhabanadabarh. 10 as. 13 gds. 1 c. 1 kt. share of mauzas Bagrabej, Brahmanibera, Hirapari, Hiraparikist, Kaimkhan, Kaimchak, Kalidasbhera, Khatrageryachak, Lohabaranchak, and Tatara. All other shares than that specified will be excluded from sale.	Chowdhury Biswambar Das Prahraj Mohapatra and others.	2,441 1 2	..	0 0 11
2243	Pargana Sabang, mahal Murarichak.	666 3 5	Entire	....	Tarak Nath Maiti and others.	..	230 0 0	..
2327	Pargana Sabang, mahal Sabang *alias* Khelna, Kasba, Balarampur.	1,128 10 0	Do. ..	....	Binode Behari Kundu Chaudhuri and another.	..	354 12 1	..
2338	Pargana Sabang, mahal Seulipur.	861 13 4	..	Residuary Account— 16 annas share of mauzas Binandachak, Bhatbarh, Gotegerya, Ghasichak, Kakdapara, Kerurbarh, Kajichak, Negalkata, Monoharpur, Monoharpur Khalpar, Salmara, bara, Salmarachhoto, Seulipur, Birbhanpur Paschim, Chalukhuri, Durgaprosadchak, Gopalchak, Narayanbarh, Pakuriachak, Raghunathchak, Sallabheri, Bhanjapur, Markandachak, Gopalbarh and Sadhulyapur. 4 as. 10 gds. share of mauzas Kalyanpur and Roypur. All other shares than that specified will be excluded from sale.	Debiprosad Bhakat and others. Auction purchasers Jogendra Nath Das and others.	726 12 9	..	250 5 3
3070	Pargana Mandalghat, mahal Ramjungle.	19,255 3 6	..	S. A. No. 9—2 as. 5 gds. share of the mahal. All other shares than that specified will be excluded from sale.	Monohar Lal Seal ..	2,708 9 0	..	1,016 11 2
3070	Ditto ..	19,255 3 6	..	S. A. No. 10—2 as. 5 gds. share of the mahal. All other shares than that specified will be excluded from sale.	Tarak Lal Seal and another.	2,708 8 9	..	1,016 10 10
				Part II.				
2816	Pargana Naruamutha, mahal Naruamutha, Jalpai, Khaspatit, etc.	12,753 8 0	..	Residuary Account—10 as. 2 gds. 2 c. 2 kt. share of the mahal. All other shares than that specified will be excluded from sale.	Biraja Charan Nanda and others.	8,077 5 0	..	584 9 6

Midnapore, the 26th February 1935.

J. C. BANERJI, *for* Collector.

In the Court of the Sub-Judge, Dinajpur.

O. C. EX. CASE No. 59/34.

Sripat Sing Gobecha, decree-holder,

versus

Raja Gopal Lal Rai and others, judgment-debtors.

Claim—Rs. 18,277-3.

NOTICE is hereby given that the right, title and interest of Raja Gopal Lal Rai and another, judgment-debtors in the above-mentioned Ex. case, in the revenue paying estate known as Lot Alihat, will be put to sale on 1st April 1935 at 12 noon, for the realisation of the decree-holder's claim. Lot Alihat is situated under police-stations Nawabganj and Ghora-ghat in the district of Dinajpur, under police-stations Gobindaganj and Palashbari within the district of Rangpur and under police-stations Khetlal and Panchbibi within the district of Bogra. The judgment-debtors have got 8 annas share in the estate and their separate share bears tauzi No. 445/1 of the Dinajpur Collectorate and for which an annual revenue of Rs. 596 has got to be paid. The total land revenue for the entire estate being Rs. 1,192 per year.

S. BANERJEE, Sub-Judge.

Dinajpur, the 30th January 1935. (339—1)

In the 1st Court of the Sub-Judge, Pabna.

RENT EXECUTION CASE No. 1 OF 1935.

Goganendra Nath Tagore

versus

Shuhasini Devi.

ALL that the entire pattani taluk held by the defendant under the plaintiff decree-holder at an annual jama of Rs. 1,113-9 as. for the land of khatian No. 2 of mauza No. 123, kishamat Jamirta and khatian No. 2 of mauza No. 124, Chak Jamirta and the lands subordinate to those two khatians in pargana Ishopshahi, thana Shahazadpur, district Pabna, will be sold in execution of the abovementioned case at 12 noon on the 16th day of April 1935 at Pabna by the 1st Sub-Judge of Pabna.

T. K. NAG, Sub-Judge.

Pabna, the 1st March 1935. (641—1)

In the Court of the Sub-Judge of Birbhum.

TITLE MORTGAGE EXECUTION CASE No. 126 OF 1934.

Probhabati Devi, decree-holder,

versus

Sudhakar Mazumdar and others, judgment-debtors.

Claim of the execution case—Rs. 3,870-12-6 pies.

Date of sale—1st April 1935.

NOTICE is hereby given that the following revenue-paying zamindari properties whose annual revenue is above Rs. 500 will be sold at 12 o'clock (noon) on the 1st April 1935 in the abovementioned execution case in the Court of the Sub-Judge of Birbhum.

Lot No. 1.—Eight annas zamindari interest of Huda Hansra appertaining to lot Senbhum, pargana Senbhum, tauzi No. 4 of the Birbhum Collectorate.

Lot No. 2.—Sixteen annas of mauza Jadabpur appertaining to lot Bistukhanda, pargana Bhurkunda, tauzi No. 61 of the Birbhum Collectorate.

Lot No. 7.—Eight annas of lot Parbatipur, pargana Alinagar, appertaining to tauzi No. 50 of the Birbhum Collectorate.

Lot No. 9.—Five annas of mauza Kantari, pargana Joynujal, appertaining to tauzi No. 237 of the Birbhum Collectorate.

D. C. SEN, Sub-Judge.

Suri, the 25th February 1935. (657—1)

In the 1st Court of the Sub-Judge, Pabna.

MONEY EXECUTION CASE No. 30 OF 1934.

Sasi Bhusan Bhaumik, decree-holder,

versus

Dhirendra Krishna Sinha and others, judgment-debtors

ALL that 4½ annas share of the defendants' zamindary right in the tauzi No. 104 Ej. of Pabna Collectorate, pargana Islampur, including the Jalkar Gangapath Padmanadi, the proportionate revenue payable being Rs. 6,841-14-6 *plus* Police Rs. 76-3-10, valued at Rs. 18,000 (as fixed by Court) will be sold at 12 noon on 16th April 1935.

T. K. NAG, Sub-Judge.

Pabna, the 23rd February 1935. (623—1)

In the 1st Court of the Sub-Judge of Pabna.

MONEY EXECUTION CASE No. 122 OF 1933.

Saroda Prosad Basu, decree-holder,

versus

Dhirendra Krishna Sinha and others, judgment-debtors.

ALL that four annas six pies of tauzi No. 104 estate of the Pabna Collectorate, pargana Islampur, including Gangapath Jalkar, the proportionate revenue payable in this four annas six pies share being Rs. 6,841-14-6, police Rs. 76-3-10p., the value of the property being Rs. 18,000 as settled by Court, will be sold in execution of the abovementioned case at 12 noon on 16th April 1935 at Pabna by the 1st Sub-Judge of Pabna.

T. K. NAG, Sub-Judge.

Pabna, the 5th March 1935. (678—1)

In the 1st Court of the Sub-Judge of Pabna.

MONEY EXECUTION CASE No. 124 OF 1933.

Promoda Sundari Dashya, decree-holder,

versus

Dhirendra Krishna Sinha and others, judgment-debtors.

ALL that four annas six pies of tauzi No. 104 estate of the Pabna Collectorate, pargana Islampur including Gangapath Jalkar, the proportionate revenue payable in this four annas six pies share being Rs. 6,841-14-6, police Rs. 76-3-10p., the value of the property being Rs. 18,000 as settled by Court, will be sold in execution of the abovementioned case at 12 noon on 16th April 1935 at Pabna by the 1st Sub-Judge of Pabna.

T. K. NAG, Sub-Judge.

Pabna, the 5th March 1935. (679—1)

In the High Court of Judicature at Fort William in Bengal, in insolvency.

NOTICE OF ADJUDICATION ORDER.

No. 27 of 1935.

Re Arnold Bruce Connolly, residing in suite No. 21 of premises No. 40, McLeod Street, in the town of Calcutta, and formerly carrying on business as a contractor, but at present employed as an assistant in the firm of Messrs. Ingersoll-Rand (India), Ltd., at No. 15, Clive Street, Calcutta, *ex parte* the debtor in person.

ON the 6th day of March 1935 an order was made by the High Court of Judicature at Fort William in Bengal in its insolvency jurisdiction adjudging the abovenamed as an insolvent.

Note.—All debts due to the estate should be paid to me

Dated this 12th day of March 1935.

G. M. FALKNER, Official Assignee.

In the High Court of Judicature at Fort William in Bengal, in insolvency.

NOTICE OF ADJUDICATION ORDER.

No. 28 of 1935.

Re Purna Chandra Dawn, residing at No. 138, Balaram Dey Street, in the town of Calcutta, and formerly carrying on business in co-partnership with Gyanendra Nath Dawn, Kartick Chandra Dawn and Upendra Nath Dawn, since deceased, under the name, style and firm of Madhab Chandra Dawn as spices merchants at No. 9, Khengraputty Street, in Calcutta aforesaid, and at present of no occupation, *ex parte* the debtor in person.

ON the 8th day of March 1935 an order was made by the High Court of Judicature at Fort William in Bengal in its insolvency jurisdiction adjudging the abovenamed as an insolvent.

Note.—All debts due to the estate should be paid to me.

Dated this 12th day of March 1935.

G. M. FALKNER, Official Assignee.

In the High Court of Judicature at Fort William in Bengal, in insolvency.

NOTICE OF ADJUDICATION ORDER.

No. 29 of 1935.

Re Ranga Lal Sen, residing at No. 59-B, Bagbazar Street, in the town of Calcutta, a medical practitioner, *ex parte* the debtor.

Victor E. Moses, debtor's solicitor.

ON the 9th day of March 1935 an order was made by the High Court of Judicature at Fort William in Bengal in its insolvency jurisdiction adjudging the abovenamed as an insolvent.

Note.—All debts due to the estate should be paid to me.

Dated this 12th day of March 1935.

G. M. FALKNER, Official Assignee.

ORDER ANNULLING ADJUDICATION.

Section 35 of the Provincial Insolvency Act, V of 1920.

In the Court of the District Judge at Chittagong.

INSOLVENCY APPLICATION No. 36 OF 1932.

Moniruzzaman, son of late Rahamat Ali, village North Silimpur, police-station Sitakunda, district Chittagong (insolvent).

ON the non-appearance of the said insolvent Moniruzzaman and non-compliance of Court's order, it is ordered that the order of adjudication, dated 8th July 1933, against the said insolvent Moniruzzaman be and the same is hereby annulled.

Dated this 1st day of October 1934.

E. S. SIMPSON, District Judge.

In the Court of the District Judge of Darjeeling.

INSOLVENCY CASE No. 11 OF 1935.

Ram Chandra Periwal, petitioner.

RAM CHANDRA PERIWAL, son of late Chhogmul Periwal, resident of Bikaneer, at present residing and carrying on business at Sukia Pookri, Darjeeling district, has applied to this Court to be adjudged insolvent.

The 21st day of March 1935 has been fixed for hearing his application at Darjeeling.

[ILLEGIBLE], *for* District Judge.

Dinajpur, the 6th March 1935. (673—1)

In the Court of the District Judge of Faridpur.

INSOLVENCY CASE No. 7 OF 1935.

Dagu Matubbar, son of late Kamiraddi Matubbar, of Khalishabad, police-station Nagarkanda, district Faridpur, debtor-petitioner.

NOTICE is hereby given that the abovenamed petitioner has applied to this Court for being adjudged insolvent and the 26th March 1935 has been fixed for the hearing of the application.

K. B. ROY, District Judge.

Faridpur, the 2nd March 1935.

(658—1)

In the Court of the District Judge of Faridpur.

INSOLVENCY CASE No. 16 OF 1935.

(1) Abinash Chandra Saha and (2) Rasik Lal Saha, sons of late Chandra Saha, of Talma, police-station Nagarkanda, district Faridpur, creditor-petitioners,

versus

Bijoy Kumar Ghosh of Laskardia, police-station Nagarkanda, district Faridpur, debtor-opposite party.

NOTICE is hereby given that the abovenamed creditor-petitioners have applied to this Court to have the debtor-opposite party adjudged insolvent and the 30th March 1935 has been fixed for the hearing of the application.

K. B. ROY, District Judge.

Faridpur, the 2nd March 1935. (659—1)

In the Court of the District Judge of Faridpur.

INSOLVENCY CASE No. 17 OF 1935.

(1) Beharilal Choudhuri, son of late Dina Nath Choudhuri, (2) Mohini Mohan Roy, son of late Banka Behari Roy, of Charbhadrasan and (3) Khagendra Nath Biswas, son of Adhar Chandra Biswas, of Char Jhaukandi, police-station Charbhadrasan, district Faridpur, creditor-petitioners,

versus

(1) Lal Chand Biswas, (2) Kali Charan Biswas and (3) Siddhi Charan Biswas, sons of late Tarini Charan Biswas, of Char Gopalpur called Diara Jhaukandi, police-station Charbhadrasan, district Faridpur, debtors-opposite party.

NOTICE is hereby given that the abovenamed creditor-petitioners have applied to this Court to have the debtors-opposite party adjudged insolvents and the 30th March 1935 has been fixed for the hearing of the application.

K. B. ROY, District Judge.

Faridpur, the 2nd March 1935. (660—1)

In the Court of the District Judge of Faridpur.

INSOLVENCY CASE No. 166 OF 1934.

(1) Sreecharan Mandal, (2) Ramjiban Mandal, (3) Gopal Mandal and (4) Benode Mandal, sons of late Rabidas Mandal, of Fatebahadur called Jhurgaon, police-station Kalkini, district Faridpur, petitioners.

NOTICE is hereby given that the abovenamed debtor-petitioners have been adjudged insolvents by an order of this Court dated 13th February 1935 and directed to apply for final discharge within six months.

K. B. ROY, District Judge.

Faridpur, the 2nd March 1935. (661—1)

In the Court of the District Judge of Faridpur.

INSOLVENCY CASES Nos. 139 AND 140 OF 1934.

Abdul Hamid Mia and Abdul Monnaf Mia, sons of late Chand Mia, of Samukkhola, police-station Baliakandi, district Faridpur, debtors, petitioners.

NOTICE is hereby given that the abovenamed debtors, petitioners, have applied to this Court for being adjudged insolvents and the 28th March 1935 has been fixed for the hearing of the applications.

K. B. ROY, District Judge.

Faridpur, the 2nd March 1935. (662—1)

In the Court of the District Judge of Faridpur.

INSOLVENCY CASES Nos. 133 AND 134 OF 1934.

Sita Nath Das and Girish Chandra Das, sons of late Ram Charan Das, of Bejkhola, police-station Goalundo, district Faridpur, debtors, petitioners.

NOTICE is hereby given that the abovenamed petitioners have applied to this Court for being adjudged insolvents and the 1st day of April 1935 has been fixed for the hearing of the applications.

S. K. GUPTA, District Judge.

Faridpur, the 6th March 1935. (667—1)

In the Court of the District Judge of Faridpur.

INSOLVENCY CASE No. 131 OF 1934.

Nil Madhab Das and Beni Madhab Das, sons of late Kailash Chandra Das, of Dharmasil, police-station Goalundo, district Faridpur, debtors, petitioners.

NOTICE is hereby given that the abovenamed petitioners have applied to this Court for being adjudged insolvents and the 30th March 1935 has been fixed for the hearing of the application.

S. K. GUPTA, District Judge.

Faridpur, the 8th March 1935. (691—1)

In the Court of the District Judge of Faridpur.

INSOLVENCY CASE No. 129 OF 1934.

Azimaddin Molla, son of late Tasimaddin Molla, of Dharmasil, police-station Goalundo, district Faridpur, debtor, petitioner.

NOTICE is hereby given that the abovenamed debtor, petitioner, has applied to this Court for being adjudged insolvent and the 30th March 1935 has been fixed for the hearing of the application.

S. K. GUPTA, District Judge.

Faridpur, the 8th March 1935. (692—1)

In the Court of the District Judge of Hooghly.

INSOLVENCY PETITION No. 27 OF 1934.

NOTICE is hereby given that Sitaram Sha, son of late Munnilal Sha, of Telinipara, thana Bhadreswar, district Hooghly, was on the 5th December 1934 adjudged an insolvent. The 18th April 1935 has been fixed for framing a schedule and creditors are required to prove their claims on that day.

T. BANERJI, *for* District Judge.

Chinsura, the 6th February 1935. (442—1)

In the Court of the District Judge of Hooghly.

INSOLVENCY PETITION No. 70 OF 1934.

NOTICE is hereby given that Baidyanath Shet, son of late Kali Charan Shet, of Bansberia, thana Magra, district Hooghly, was on the 19th January 1935 adjudged an insolvent. The 18th April 1935 has been fixed for framing a schedule and creditors are required to prove their claims on that day.

T. BANERJI, *for* District Judge.

Chinsura, the 6th February 1935. (443—1)

In the Court of the District Judge of Hooghly.

INSOLVENCY PETITION No. 12 OF 1934.

NOTICE is hereby given that Nalini Chandra Ghosh, son of Makhanlal Ghosh, of Mamudpore, thana Magra, district Hooghly, was on the 12th January 1935 adjudged an insolvent. The 13th April 1935 has been fixed for framing a schedule and creditors are required to prove their claims on that day.

T. BANERJI, *for* District Judge.

Chinsura, the 6th February 1935. (444—1)

In the Court of the District Judge of Hooghly.

INSOLVENCY PETITION No. 41 OF 1934.

NOTICE is hereby given that Charu Chandra Pakheria of Purut, thana Polba, district Hooghly, was on the 12th January 1935 adjudged an insolvent. The 13th April 1935 has been fixed for framing a schedule and creditors are required to prove their claims on that day.

T. BANERJI, *for* District Judge.

Chinsura, the 6th February 1935. (445—1)

In the Court of the District Judge of Hooghly.

INSOLVENCY PETITION No. 55 OF 1934.

NOTICE is hereby given that Beharilal Pal, son of Rapur Pal, of Thakurani Chak, thana Khanakul, district Hooghly, was on the 21st January 1935 adjudged an insolvent. The 21st April 1935 has been fixed for framing a schedule and creditors are required to prove their claims on that day.

T. BANERJI, *for* District Judge.

Chinsura, the 6th February 1935. (446—1)

In the Court of the District Judge of Hooghly.

INSOLVENCY PETITION No. 96 OF 1934.

NOTICE is hereby given that Aghore Chandra De, son of late Jadunath De, of Gangadharpur, thana Chanditala, district Hooghly, was on the 12th January 1935 adjudged an insolvent. The 12th April 1935 has been fixed for framing a schedule and creditors are required to prove their claims on that day.

T. BANERJI, *for* District Judge.

Chinsura, the 6th February 1935. (447—1)

In the Court of the District Judge of Hooghly.

INSOLVENCY PETITION No. 47 OF 1934.

NOTICE is hereby given that Ram Chandra Benia, son of late Dulai Ram Benia, of Telinipara, thana Bhadreswar, district Hooghly, was on the 16th January 1935 adjudged an insolvent. The 16th April 1935 has been fixed for framing a schedule and creditors are required to prove their claims on that day.

T. BANERJI, *for* District Judge.

Chinsura, the 12th February 1935. (460—1)

In the Court of the District Judge of Hooghly.

NOTICE is hereby given, under clause (2) of section 12 of the Provincial Insolvency Act, V of 1920, to his creditors that the insolvency petition of Hari Das Karmaker, son of late Gour Mohon Karmaker, of Pohai, thana Polba, district Hooghly, has been admitted by this Court as No. 10 of 1935 and that the 6th April 1935 has been fixed for the hearing thereof.

S. SEN, District Judge.

Chinsura, the 7th March 1935. (694

NOTICE OF ADJUDICATION ORDER.

In the Court of the District Judge of Jessore.

INSOLVENCY CASE No. 5 OF 1934.

Re Taraprasanna Roy, son of late Parbati Charan Roy, of Itina, police-station Lohagara, district Jessore.

ON the 27th day of February 1935 an order was made by this Court adjudging the abovenamed person as an insolvent and he was directed to apply for discharge within a year from that date.

K. C. DAS GUPTA, District Judge.

Jessore, the 7th March 1935. (677—1)

In the Court of the District Judge of Khulna.

INSOLVENCY CASE No. 3 OF 1935.

IT is hereby notified that Surendra Mohan Chakravarti, son of late Ram Kisore Chakravarti, of Gobindapur, police-station Rajore, district Faridpur, at present of Bagerhat town, has filed a petition for adjudication as insolvent on 1st March 1935 and 2nd April 1935 has been fixed for hearing of the same.

K. C. CHUNDER, District Judge.

Khulna, the 8th March 1935. (681—1)

In the Court of the District Judge of Khulna.

INSOLVENCY CASE No. 5 OF 1934.

IT is hereby notified that the order of adjudication of Ram Mandal, son of late Darpa Narayan Mandal, of Kanchrahati, police-station Syamnagore, district Khulna, as an insolvent, dated the 6th September 1934, has been annulled on the 6th March 1935.

K. C. CHUNDER, District Judge.

Khulna, the 8th March 1935. (682—1)

In the Court of the District Judge of Murshidabad.

INSOLVENCY CASE No. 42 OF 1934.

In the matter of Amulya Kumar Biswas, son of late Braja Nath Biswas, of Bhaturia, now residing at Syedabad, Mathurapara, police-station Berhampore town, district Murshidabad, debtor-petitioner.

NOTICE is hereby given to all concerned that the abovenamed debtor has applied to this Court for being adjudicated an insolvent and that the 23rd day of March 1935 has been fixed for hearing his application.

S. C. SEN, *for* District Judge.

Berhampore, the 7th March 1935. (683—1)

In the Court of the District Judge of Murshidabad.

INSOLVENCY CASE No. 9 OF 1935.

In the matter of Manindra Nath Das and Aswini Kumar Das, sons of late Behari Lal Das, of Kayadanga, police-station Suti, district Murshidabad, debtors-petitioners.

NOTICE is hereby given to all concerned that the abovenamed debtors have applied to this Court for being adjudicated insolvents and that the 6th day of April 1935 has been fixed for hearing of thier application.

S. C. SEN, *for* District Judge.

Berhampore, the 7th March 1935. (684—1)

In the Court of the District Judge of Mymensingh.

INSOLVENCY CASE No. 41 OF 1934.

PURSUANT to a petition, dated the 27th day of August 1934, filed by Kuran Sk., son of late Gaher Sk., of village Swaruppur, police-station Kalibati, district Mymensingh, and on the application of the debtor himself and on reading his application and hearing his pleader, it is ordered that the debtor be and the said debtor is hereby adjudged insolvent.

It is further ordered that the debtor do apply for his final discharge within one year from this date.

Dated this 5th day of March 1935.

H. G. S. BIVAR, District Judge.

(676—1)

In the Court of the District Judge of Pabna and Bogra.

INSOLVENCY CASE No. 25 OF 1934.

NOTICE is hereby given that insolvent Abir Mondal, son of late Nabai Mondal, of Charbangabari, police-station and district Pabna, has applied for his final discharge and the 8th April 1935 has been set down for hearing of the application.

B. K. BASU, District Judge.

Pabna, the 6th March 1935. (674—1)

In the Court of the District Judge of Pabna and Bogra.

INSOLVENCY CASE No. 36 OF 1934.

NOTICE is hereby given that insolvent Hyder Ali Talukdar, son of Madhu Talukdar, of Delua, police-station Belkuchi, district Pabna, has applied for his final discharge and the 3rd April 1935 has been set down for hearing of the application.

B. K. BASU, District Judge.

Pabna, the 6th March 1935. (675—1)

In the Court of the District Judge of Rangpur.

INSOLVENCY CASE No. 12 OF 1934.

ON the application of the debtor Biru Mamud Fakir, son of late Panaulla Paikar, of Saulmari, police-station Jaldhaka, in Rangpur, for being finally discharged, the 22nd day of March 1935 has been fixed for hearing the aforesaid petition and the examination of the debtor.

P. C. DE, District Judge.

Rangpur, the 7th March 1935. (685—1)

In the Court of the District Judge of Rangpur.

INSOLVENCY CASE No. 11 OF 1935.

ON the application of the debtor Sakoddi Mamud, son of late Fulmamud, of Golmunda, police-station Jaldhaka, in Rangpur, for being adjudged an insolvent, the 27th day of March 1935 has been fixed for hearing the aforesaid petition and the examination of the debtor.

P. C. DE, District Judge.

Rangpur, the 7th March 1935. (686—1)

In the Court of the District Judge of 24-Parganas.

INSOLVENCY CASE No. 9 OF 1935.

Brij Mohan Bagri of 42, Garden Reach Road, police-station Metiaburuz, 24-Parganas, applicant.

To Chotelal Lachmi Narayan of 15, Pageyaputty Street, Calcutta, and others, creditors.

ON the 2nd day of March 1935 it was ordered that the matter of the petition of the applicant be heard on the 8th day of April 1935, and that the said applicant do attend to be examined by this Court on that date.

T. H. ELLIS, District Judge.

Alipore, the 5th March 1935. (670—1)

In the Court of the District Judge of 24-Parganas.

INSOLVENCY CASE No. 10 OF 1935.

Haridas Chatterjee of 10, Paddapuker Lane, police-station Ballygunge, district 24-Parganas, applicant

To Anath Nath De, Trustee to the estate of late Dwaraka Nath De of 100, Raja Dinendra Street, Calcutta, creditor.

ON the 1st day of March 1935 it was ordered that the matter of the petition of the applicant be heard on the 8th day of April 1935, and that the said applicant do attend to be examined by this Court on that date.

T. H. ELLIS, District Judge.

Alipore, the 5th March 1935. (671—1)

In the 4th Court of the Sub-Judge of 24-Parganas.

INSOLVENCY CASE No. 17 OF 1935.

Deo Nandan Singh of Altabag, Garden Reach, police-station Muchikhola, 24-Parganas, applicant.

To Ram Sanahi Singh of Mudiali, Metiaburuz, and others, creditors.

ON the 6th day of February 1935 it was ordered that the matter of the petition of the applicant be heard on the 2nd day of April 1935, and that the said applicant do attend to be examined by this Court on that date.

J. N. SEN, Sub-Judge.

Alipore, the 18th February 1935. (581 1)

In the 4th Court of the Sub-Judge of 24-Parganas.

INSOLVENCY CASE No. 47 OF 1935.

Sk. Bhartu of 8, Bechulal Road, police-station Entally, 24-Parganas, applicant.

To Hiralal Agarwala of 20, Manicktola Street, Calcutta, and others, creditors.

ON the 13th day of February 1935 it was ordered that the matter of the petition of the applicant be heard on the 2nd day of April 1935, and that the said applicant do attend to be examined by this Court on that date.

J. N. SEN, Sub-Judge.

Alipore, the 20th February 1935. (583 -1)

In the 4th Court of the Sub-Judge of 24-Parganas.

INSOLVENCY CASE No. 48 OF 1935.

A. E. Mercado of Darga Mansions in New Circular Road, Park Circus, 24-Parganas, applicant.

To Mahadeolal and Sons of 14B, Royd Street, Calcutta, and others, creditors.

ON the 13th day of February 1935 it was ordered that the matter of the petition of the applicant be heard on the 2nd day of April 1935, and that the said applicant do attend to be examined by this Court on that date.

J. N. SEN, Sub-Judge.

Alipore, the 16th February 1935. (584—1)

In the 4th Court of the Sub-Judge of 24-Parganas.

INSOLVENCY CASE No. 50 OF 1935.

Mokbul Mondal of Bagberia, police-station Barasat, 24-Parganas, applicant.

To Gopal Chandra Banerjee of Madanpur, 24-Parganas, and others, creditors.

ON the 13th day of February 1935 it was ordered that the matter of the petition of the applicant be heard on the 2nd day of April 1935, and that the said applicant do attend to be examined by this Court on that date.

J. N. SEN, Sub-Judge.

Alipore, the 16th February 1935. (585—1)

NOTICE TO CREDITORS OF APPLICATION FOR DISCHARGE.

Section 41(*1*) of the Provincial Insolvency Act, V of 1920.

In the 4th Court of the Sub-Judge at Alipore.

INSOLVENCY CASE No. 450 OF 1933.

S. Jordan of 178, Lower Circular Road, Beniapukur, 24-Parganas, applicant.

TAKE notice that the abovenamed insolvent has applied at the Court for his discharge, and that the Court has fixed the 2nd day of April 1935, at 11 o'clock, for hearing the application.

Dated this 18th day of February 1935.

J. N. SEN, Sub-Judge.

(587—1)

NOTICE TO CREDITORS OF APPLICATION FOR DISCHARGE.

Section 41(*1*) of the Provincial Insolvency Act, V of 1920.

In the 4th Court of the Sub-Judge at Alipore.

INSOLVENCY CASE No. 125 OF 1934.

A. P. Saldanha of 40, Gora Chand Road, Entally, 24-Parganas, applicant.

TAKE notice that the abovenamed insolvent has applied at the Court for his discharge, and that the Court has fixed the 2nd day of April 1935, at 11 o'clock, for hearing the application.

Dated this 18th day of February 1935.

J. N. SEN, Sub-Judge.

(588—1)

ORDER OF ADJUDICATION.

Section 27 of the Provincial Insolvency Act, V of 1920.

In the 4th Court of the Sub-Judge at Alipore.

INSOLVENCY APPLICATION No. 255 OF 1934.

PURSUANT to a petition, dated 18th June 1934, filed by Charles Enos Savaille of 60, Pipe Road, Kidderpore, 24-Parganas, debtor, and on the application of the debtor himself and on reading his application and hearing his pleader, it is ordered that the debtor be and the said debtor is hereby adjudged insolvent.

It is further ordered that the debtor do apply for his discharge within six months from this date.

Dated this 5th day of February 1935.

J. N. SEN, Sub-Judge.

(593—1)

ORDER OF ADJUDICATION.

Section 27 of the Provincial Insolvency Act, V of 1920.

In the 4th Court of the Sub-Judge at Alipore.

INSOLVENCY APPLICATION No. 380 OF 1934.

PURSUANT to a petition, dated 30th August 1934, filed by Abdul Jabbar of 28, Ahiripukur Road, Ballygunge, 24-Parganas, debtor, and on the application of the debtor himself and on reading his application and hearing his pleader, it is ordered that the debtor be and the said debtor is hereby adjudged insolvent.

It is further ordered that the debtor do apply for his discharge within six months from this date.

Dated this 5th day of February 1935.

J. N. SEN, Sub-Judge.

(597—1)

ORDER OF ADJUDICATION.

Section 27 of the Provincial Insolvency Act, V of 1920.

In the 4th Court of the Sub-Judge at Alipore.

INSOLVENCY APPLICATION No. 392 OF 1934.

PURSUANT to a petition, dated 29th May 1934, filed by Charu Chandra Ghosh of Sudia, police-station Jagaddal, 24-Parganas, debtor, and on the application of the debtor himself and on reading his application and hearing his pleader, it is ordered that the debtor be and the said debtor is hereby adjudged insolvent.

It is further ordered that the debtor do apply for his discharge within six months from this date.

Dated this 5th day of February 1935.

J. N. SEN, Sub-Judge.

(598—1)

ORDER OF ADJUDICATION.

Section 27 of the Provincial Insolvency Act, V of 1920.

In the 4th Court of the Sub-Judge at Alipore.

INSOLVENCY APPLICATION No. 441 OF 1934.

PURSUANT to a petition, dated 29th September 1934, filed by Keheri Sing of 68, Paharpur Road, Fatehpur, 24-Parganas, debtor, and on the application of the debtor himself and on reading his application and hearing his pleader, it is ordered that the debtor be and the said debtor is hereby adjudged insolvent.

It is further ordered that the debtor do apply for his discharge within six months from this date.

Dated this 5th day of February 1935.

J. N. SEN, Sub-Judge.

(603—1)

MAULVI A. NURAL HAQUE intends to be admitted as an Advocate of the High Court.

(509—4)

KEDARMULL BRAHMIN intends to be admitted as an Advocate of the High Court.

(438—4)

TARACHAND SARAF intends to be admitted as an Advocate of the High Court.

(439—4)

MR. ABHAYA PADA CHAKRAVARTI, M.A., B.L., intends to be enrolled as an Advocate, High Court.

(507—4)

MR. JITENDRA NATH CHATTERJEE, M.A., B.L., intends to be enrolled as an Advocate of the High Court, Calcutta.

(538—4)

MR. PRABODH CHANDRA MAITRA, LL. B., intends to be enrolled as an Advocate, Calcutta High Court.

(562—4)

ASHRAFUDDIN CHAUDHURY, LL.B., intends to be enrolled as an Advocate of the High Court, Calcutta.

(571—4)

MR. DAYAMAY MUKHERJI, M.A., B.L., intends to be enrolled as an Advocate of the High Court, Calcutta.

(627—4)

RAI SOURINDRA NATH CHOWDHURY, B.L., intends to practise as an Advocate, Calcutta High Court.

(652—4)

MR. RADHAKANTA GUPTA, M.Sc., B.L., intends to be enrolled as an Advocate of Calcutta High Court.

(663—4)

MR. KRISHNA NATH BASU, B.L., intends to be enrolled as an Advocate of the Calcutta High Court.

(680—4)

MR. KULADHAR CHALIHA desires to be enrolled as an Advocate of the Calcutta High Court.

(654—4)

WANTED an Engine Driver for the Dacca Agricultural Farm on a fixed pay of Rs. 60 per month. The post is an inferior one.

He must have at least five years' training as a fitter in a recognised workshop and also five years' experience in the driving of and repairs to industrial types of internal combustion engines, Diesel, Semi-Diesel Kerosene and Petrol.

Applications will be received by the undersigned up to 1st April 1935.

J. K. BISWAS, Deputy Director of Agriculture, Eastern Circle.

WANTED a Head Master for a Government High School in Bengal with effect from 1st April 1935 or as soon after that date as possible. The post is in the Bengal Educational Service, the pay of which is Rs. 150—25—200—50/2—300—40/2—500—50/2—700 with efficiency bars after 12th and 20th year of service and the person appointed will be on probation for two years.

2. Candidates for direct appointment should be British subjects and must not be over 45 years of age. They must possess a first class degree of M.A. or M.Sc. of an Indian University, or Honours degree (or corresponding qualification) of a European or American University. They must also possess a degree or diploma in teaching.

3. Candidates must produce evidence of an outstanding capacity for developing the corporate life of a school and power of maintaining discipline, of capacity for control, and of a satisfactory record of teaching experience.

4. Canvassing will be considered a disqualification.

5. Officers in the Subordinate Educational Service possessing the requisite qualifications may apply.

6. Each candidate for direct appointment must furnish two certificates written not more than one year prior to the date of application, from two responsible persons unconnected with his college or University and not related to him testifying to his private character.

7. Applications supported by documentary evidence of the qualifications possessed and of age should reach the Assistant Director of Public Instruction, Bengal, Writers' Buildings, Calcutta, on or before the 1st May 1935.

NOTICE is hereby given that all exhibits filed in cases disposed of in this Court during the year 1932 will be destroyed if not taken back before 31st March 1935 by parties who filed them.

N. N. GUPTA, Municipal Magistrate, Calcutta.

Town Hall, Calcutta, the 9th January 1935.

NOTICE is hereby given that all exhibits filed in cases disposed of in this Court during the year 1932 will be destroyed if not taken back before 31st March 1935 by the parties who filed them.

A. MAJID, Municipal Magistrate, Calcutta.

Town Hall, Calcutta, the 9th January 1935.

Imperial Bank of India.

IN terms of the Central Board's notification, dated the 2nd May 1934, published in the Gazette of India, dated the 12th May 1934, the Local Board have approved of the following Branch where the signing powers referred to shall be exercised :—

Chittagong.

The following appointments on the Bank's staff are hereby notified :—

Mr. D. H. Stanger, to be Agent, Asansol Branch, as from the 26th February 1935, *vice* Mr. R. D. Worling, M.C.

Mr. R. D. Worling, M.C., to act as Agent, Park Street Branch, as from the 8th March 1935, *vice* Mr. W. J. Lutley.

B. A. C. NEVILLE, Secretary and Treasurer.

Calcutta, the 11th March 1935. (743—1)

THE Bengal and Madras Service Family Pension Fund which is provisionally managed and assisted by Government has for its object the provision of monthly pensions for the maintenance of the widows and children of subscribers and is open, with certain exceptions, to all active and pensioned members of the Uncovenanted service of Government (except those serving under the Government of Bombay), and to Local Fund servants earning pensions from Government. Some of the special features of the fund are (1) that widowed daughters incapable of re-marriage or children labouring under such mental or bodily infirmities as incapacitate them from earning their livelihood or preclude the possibility of marriage (in case of a daughter) are admitted to its benefits ; and (2) that subscribers to the Widows and Daughters' branches are entitled to a refund of 30 per cent. of the premia paid, should the nominee predecease them after five years of admission. The second quinquennial valuation of the Fund has been completed by the Actuary to the Government of India, and his report discloses very favourable results. For forms of application and rules of the Fund apply to the Accountant-General, Bengal, Imperial Secretariat Buildings, Calcutta.

Road Cess Notification.

The district board of Mymensingh at their special meeting held on the 26th January 1935 resolved to levy cess during the next financial year 1935-36, under section 46 of the Bengal Local Self-Government Act at the maximum rate of 6 pies in the rupee on the annual value of lands, etc.

S. AHMAD, Chairman, District Board.

Mymensingh, the 22nd February 1935. (617—3)

Destroyed.

THE Government Promissory Note No. 105642 of 3 per cent. loan of 1896-97 for Rs. 1,000, originally standing in the name of Kedar Nath Mukerjee, the proprietor, by whom it was never endorsed to any other person having been destroyed, notice is hereby given that payment of the above note and the interest thereupon have been stopped at the Public Debt Office, Imperial Bank of India, Calcutta, and that application is about to be made for the issue of a duplicate in favour of the proprietor. The public are cautioned against purchasing or otherwise dealing with the above-mentioned security.

Name of the advertiser—Probodh Chandra Ganguli, Pleader, Alipore, for Kedar Nath Mukerji of Ghatakpara, Ranaghat.

(452—3)

Currency Note.

PORTION of the following Currency Note of the Calcutta Circle is stated to have been destroyed, and payment of its value has been claimed by the person whose name is placed against the number. Any other person claiming a right to it is warned to communicate at once with the undersigned :—

Register No.	Number of Note.	Value. Rs.	Name of claimant.
WD 12 of 34-35	RD/71, 53991	100	Bhola Nath Kasera, son of Suraj Prasad, Mohalla Harha, House No. C.K. 48/187, Benares City.

K. K. CHETTUR, Currency Officer.

Currency Office, Calcutta, the 4th March 1935.

Currency Note.

PORTION of the following Currency note of the Calcutta Circle is stated to have been destroyed, and payment of its value has been claimed by the person whose name is placed against the number. Any other person claiming a right to it is warned to communicate at once with the undersigned :—

Register No.	Number of Note.	Value. Rs.	Name of claimant.
WD 13 of 34-35	S/78, 670310	100	Ram Chand Sao, Ramji chak, p.o. Digha, district Patna.

K. K. CHETTUR, Currency Officer.

Currency Office, Calcutta, the 4th March 1935.

Stolen.

THE Government Promissory Note No. 252585 of the 3½ per cent. loan of 1854-55 for Rs. 1,000, originally standing in the name of Baidyanath Ghosh and Bhupendra Nath Ghosh, minors, through their guardian Saraswati Bala Ghosh, the proprietors, by whom it was never endorsed to any other person, having been stolen, notice is hereby given that payment of the above note and the interest thereupon have been stopped at the Public Debt Office, Imperial Bank of India, Calcutta, and that application is about to be made for the issue of duplicate in favour of the proprietors. The public are cautioned against purchasing or otherwise dealing with the above-mentioned security.

SARASWATI BALA GHOSH, post office Basirhat, village Basirhat, district 24-Parganas.

— (222—3)

Lost, Stolen or Destroyed.

(As the case may be.)

THE Government Promissory Notes Nos. 254712, 254713 and 251467 of the 3½ per cent. loan of 1865 for Rs. 1,000, Rs. 1,000 and Rs. 100, respectively, originally standing in the name of the Bank of Bengal and last endorsed to Rakhal Das Bannerjee (since deceased), the proprietor, by whom they were never endorsed to any other person, having been lost, stolen or destroyed, notice is hereby given that payment of the above notes and the interest thereupon have been stopped at the Public Debt Office, Imperial Bank of India, Calcutta, and that application is about to be made for the issue of duplicates in favour of Sibatara Bannerji. The public are cautioned against purchasing or otherwise dealing with the above-mentioned securities.

Signature of the advertiser—Sibatara Bannerji.

Residence—1-1C, Puddapukur Square, Kidderpur, Calcutta. (672—3)

Lost, Stolen or Destroyed.

THE Government Promissory Note No. G025969 of the 6 per cent. loan of 1933-36 for Rs. 1,000, originally standing in the name of the Imperial Bank of India and last endorsed to Biman Chandra Bose, the proprietor, by whom it was never endorsed to any other person, having been lost, stolen or destroyed, notice is hereby given that payment of the above note and the interest thereupon have been stopped at the Public Debt Office, Imperial Bank of India, Calcutta, and that application is about to be made for the issue of duplicate in favour of the proprietor. The public are cautioned against purchasing or otherwise dealing with the above-mentioned security.

Name of the advertiser—Biman Chandra Bose.

Residence—11B, Scott Lane, Calcutta.

(628—3)

In the matter of the Indian Companies Act, 1913, and In the matter of the Bengal Banking and Insurance Company, Limited.

Proceedings of the meeting of the Board of Directors of the Bengal Banking and Insurance Company, Limited, held on 2nd February 1935, at 6 p.m., in the office of the Company at Comilla.

Present :

Babu Nagendra Nath Dhar.
Babu Bhupendralal Dhar.
Babu Bidhubhusan Guha.
Babu Jatindra Mohon Bramha.

BABU Nagendra Nath Dhar is voted to the Chair.

1. Read and confirmed the proceedings of the last meeting.

2. Considered the present financial position of the Company as is apparent from the statement of accounts placed before the meeting and it is resolved—

"that while it has been proved to the entire satisfaction of this meeting that the Company cannot by reason of its liabilities continue business, and that it is advisable to wind up the same, and that Babu Bidhubhusan Guha be appointed as liquidator for the purpose of such winding up."

3. It is further resolved that the remuneration of the liquidator be fixed at Rs. 50 only, a consolidated sum.

Meeting thus terminate with thanks to the chair.

N. N. DHAR, Chairman.

Comilla, the 25th February 1935. (719—1)

In the matter of the Indian Companies Act, VII of 1913, and In the matter of the Siddheswari Insurance Co., Ltd.

AT an extraordinary general meeting duly held at the office of the Siddheswari Insurance Co., Ltd., at Dighirpar, on the 8th of March 1935, the following resolution was duly passed :—

"That it has been proved to this meeting that the Company cannot by reason of its liabilities continue its business and it is advisable to wind up voluntarily, and that Babu Ashutosh Chatterjee is appointed liquidator with a remuneration of Rs. 25 in all to complete the liquidation."

SADANANDA KAR, Chairman.

Dighirpar, Dacca, the 8th March 1935. (734—1)

In the matter of the Indian Companies Act, VII of 1913, and In the matter of the Siddheswari Insurance Co., Ltd. (in liquidation).

NOTICE is given in pursuance of section 209(*1*) of the Indian Companies Act, 1913, that a meeting of the creditors of the above Company will be held at 3 p.m. on Sunday, the 31st March 1935, in the head office, Dighirpar (Dacca), to consult about the assets and the liabilities of this Company.

ASHUTOSH CHATTERJEE, Liquidator.

Dighirpar, Dacca, the 8th March 1935. (735—1)

Descriptive Catalogue of Sanskrit Manuscripts.

PARTS I, II and III of a Descriptive Catalogue of the Sanskrit Manuscripts in the Library of the Calcutta Sanskrit College, prepared by Pandit Hrishikesh Sastri and Babu Siva Chandra Gui, M.A., B.L., of that College, are offered to the public for sale. The Catalogue having to be completed in 23 parts the price of each part is 12 annas a copy exclusive of postage. Copies can be obtained from the Principal of the Sanskrit College, Calcutta.

Imperial Library.

(Secretariat Buildings, 6, Esplanade East, Calcutta.)
Open on—

Week days and Saturdays from 10 a.m. to 7 p.m.
Sundays and Gazetted holidays from 2 p.m. to 5 p.m.

THE Imperial Library is also a Lending Library. It is free to all except children. There is no subscription to pay.

K. M. ASADULLAH, Librarian.

CINCHONA FACTORY PRODUCTS.

By order of the Government of Bengal Cinchona Factory Products as manufactured and packed at the Cinchona Factory, Mungpoo, Darjeeling district, will be sold and distributed by the Superintendent of the **Presidency Jail**, *in original packages* as received from the Mungpoo Factory, at the rates herein noted **from the 1st May 1926 :—**

Quinine Sulphate.

For 60 lbs. and upwards at a time .. Rs. 18 per lb.

For 6 lbs. and over but less than 60 lbs. at a time .. .. .. „ 19 „

For any quantity less than 6 lbs. .. „ 20 „

Totaquina.

Irrespective of quantity .. Rs. 13-8 per lb.

Quinine Hydrochloride.

For 60 lbs. and upwards at a time .. Rs. 23 per lb.

For 6 lbs. and over but less than 60 lbs. at a time .. .. .. „ 24 „

For any quantity less than 6 lbs. .. „ 25 „

Quinine Di-Hydrochloride.

For 60 lbs. and upwards at a time .. Rs. 25 per lb.

For 6 lbs. and over but less than 60 lbs. at a time .. .. .. „ 26 „

For any quantity less than 6 lbs. .. „ 27 „

Quinidine Sulphate.

For 60 lbs. and upwards at a time .. Rs. 20 per lb.

For 6 lbs. and over but less than 60 lbs. at a time .. .. .. „ 21 „

For any quantity less than 6 lbs. .. „ 22 „

Cinchonidine Sulphate.

For 60 lbs. and upwards at a time .. Rs. 25 per lb.

For 6 lbs. and over but less than 60 lbs. at a time .. .. .. „ 26 „

For any quantity less than 6 lbs. .. „ 27 „

Cinchonine Sulphate.

For 60 lbs. and upwards at a time .. Rs. 12 per lb.

For 6 lbs. and over but less than 60 lbs. at a time .. .. .. „ 13 „

For any quantity less than 6 lbs. .. „ 14 „

*Cinchona Febrifuge (Powder).

For 60 lbs. and upwards at a time .. Rs. 9 per lb.

For 6 lbs. and over but less than 60 lbs. at a time .. .. .. „ 9 „

For any quantity less than 6 lbs. .. „ 10 „

*Cinchona Febrifuge (Tablets).

For 60 lbs. and upwards at a time .. Rs. 10 per lb.

For 6 lbs. and over but less than 60 lbs. at a time .. .. .. „ 10 „

For any quantity less than 6 lbs. .. „ 11 „

Quinoidine (Tablets).

For 60 lbs. and upwards at a time .. Rs. 5 per lb.

For 6 lbs. and over but less than 60 lbs. at a time .. .. .. „ 5 „

For any quantity less than 6 lbs. .. „ 6 „

Quinoidine (in Mass).

For 60 lbs. and upwards at a time .. Rs. 4 per lb.

For 6 lbs. and over but less than 60 lbs. at a time .. .. .. „ 4 „

For any quantity less than 6 lbs. .. „ 5 „

Cinchona Bark (in 50 pound original bags).

Per bag .. .. .. Rs. 25.

Quinine Tablets per box of 200 tablets each.

Rs. 2-8 (Bengal), Rs. 3 (outside Bengal)

Rs. 15-8-0 per lb.

Transit charges extra in every case.

***Cinchona Febrifuge** is for sale to Government and Charitable Institutions, Local Bodies and Missionaries only. **It is not for sale to Private Firms or the General Public.**

Quinine Sulphate is now open for sale to the Public at the above rates. But it will be supplied to Hospitals and Dispensaries of this Presidency only at the wholesale rate of Rs. 18 per pound irrespective of quantities.

Five and ten boxes of Quinine Tablets are sold to the public at the concession rates which will be intimated on application.

Provinces other than Bengal, Bihar and Orissa and Assam will get their supplies of Sulph. Quinine from the Director, Botanical Survey of India, Sibpur, Howrah.

Local sale at the jail gate from 10 to 12 noon.

The system of payment is by—*Cash in advance*—by "*Treasury Challans*," which should accompany the order or indent.

In cases where this is not possible, payment should be made by "*Remittance Transfer Receipts*" or crossed "*Cheques.*"

Indents unaccompanied by cash in advance will be sent Value Payable Post. Credit sale is not allowed except under special circumstances.

In the case of *Government officers* payments will be recovered by *Book Transfer, i.e., Countersigned Invoices,* in the event of *Cash* not accompanying the indent by "*Treasury Challans,*" *Remittance Transfer Receipt or Cheque.*

2. Price and postage must accompany the price of the drug (when the drug is required by post).

The name of the Railway and Steamer Station or Post Office must be written distinctly when the parcels are required by Rail, Steamer or by Post. Railway parcels are sent by passenger train only.

A scale of postage is given below.

	1 oz.	2 ozs.	4 ozs.	½ lb.	¾ lb.	1 lb.
	As.	As.	As.	As.	As.	Rs. A.
Quinine Sulph. ..	..	..	7	7	11	0 11
Cinchona Feb. ..	..	..	7	7	11	0 11
Cinchona Feb. Tablets	..	..	7	7	11	0 11
Quinoidine Tablets ..	..	..	..	..	..	1 13
Quinine Hydrochlor. ..	5	5	7	7	..	0 11
Quinine Di-hydrochlor.	5	5	7	7	..	0 11
Quinine Tablets ..	..	..	7	7	11	0 11

	1¼ lb.	2 lb.	3 lb.	4 lb.	5 lb.	6 lb.
	Rs. A.	Rs. A.	Rs. A.	Rs. A.	Rs. A.	Rs. A.
Quinine Sulph. ..	0 15	1 3	1 7	1 15	2 7	2 15
Cinchona Feb. ..	0 15	0 15	1 7	1 11	1 15	2 7
Cinchona Feb. Tablets	1 3	1 3	1 11	1 15	2 7	2 15
Quinoidine Tablets ..	..	2 3	3 3	..	..	..
Quinine Hydrochlor. ..	1 1	0 15	1 7	1 11	..	..
Quinine Di-hydrochlor.	1 1	0 15	1 13	2 5	..	..
Quinine Tablets ..	0 15	0 14	1 7	1 11	1 15	2 3

Two different drugs are not packed in the same parcel and postage must be paid separately for each kind.

N.B.—Postage stamps are not accepted as revenue.

Government reserve the right to alter the price without notice.

Registered No. C207

The Calcutta Gazette

THURSDAY, MARCH 21, 1935.

PART III

Acts of the Bengal Legislative Council.

GOVERNMENT OF BENGAL.

Legislative Department.

NOTIFICATION.

No. 267L.—14th March, 1935.—In pursuance of the provisions of sub-section (*3*) of section 81 of the Government of India Act, the following Act of the local legislature of Bengal, having been assented to by the Governor General on the 5th March, 1935, is hereby published for general information.

Bengal Act IV of 1935.

THE BENGAL WORKMEN'S PROTECTION ACT, 1934.

[Published in the *Calcutta Gazette* of the 21st March, 1935.]

An Act to prevent recovery of debts from certain classes of workmen by besetting their place of work.

WHEREAS it is expedient to prevent recovery of debts from certain classes of workmen by besetting their place of work ;

AND WHEREAS the previous sanction of the Governor General has been obtained under sub-section (*3*) of section 80A of the Government of India Act to the passing of this Act ; 5 & 6 Geo. V, c. 61; 6 & 7 Geo. V, c. 37; 9 & 10 Geo. V, c.101.

It is hereby enacted as follows :—

Short title and local extent.

1. (*1*) This Act may be called the Bengal Workmen's Protection Act, 1934.

(*2*) It shall apply in the first instance only to Calcutta and the districts of 24-Parganas, Hooghly and Howrah.

Explanation.—"Calcutta" means the town of Calcutta as defined in section 3 of the Calcutta Police Act, 1866, together with the suburbs of Calcutta as defined by notification under section 1 of the Calcutta Suburban Police Act, 1866, and the port of Calcutta as defined by notification under section 5 of the Indian Ports Act, 1908. Ben. Act IV of 1866. Ben. Act II of 1866. XV of 1908.

Further provision as to extent.

2. The Local Government may, by notification in the *Calcutta Gazette*, extend this Act to any area specified in the notification :

Provided that no notification under this section shall be published in respect of any area included in a military cantonment without the previous sanction of the Governor General in Council.

Besetting certain premises with a view to recover debt.

3. Whoever loiters at or near any—

(*a*) mine ;

(*b*) dock, wharf or jetty ;

(*c*) railway station or yard ; or

(*d*) premises whereon any manufacturing process is carried on,

in a manner, or in circumstances, indicating that he is so loitering with a view to recover any debt from any workman employed in such mine, dock, wharf, jetty, railway station or yard or premises shall be punished with imprisonment which may extend to six months or with fine or with both.

Explanation.—The expression "manufacturing process" shall have the meaning assigned to it in the Indian Factories Act, 1911. XII of 1911.

Offences under this Act to be cognizable and bailable.

4. Notwithstanding anything contained in the Code of Criminal Procedure, 1898, any offence punishable under this Act shall be cognizable and bailable. Act V of 1898.

Offences under this Act triable by Presidency Magistrate or Magistrate of first class.

5. No Magistrate other than a Presidency Magistrate or a Magistrate of the first class shall try any offence punishable under this Act.

A. DEC. WILLIAMS,
Secy. to the Govt. of Bengal.

Registered No. C207

The Calcutta Gazette

THURSDAY, MARCH 21, 1935.

PART IV

Bills introduced in the Bengal Legislative Council, Reports of Select Committees presented or to be presented to that Council, and Bills published before introduction in that Council.

BENGAL LEGISLATIVE COUNCIL DEPARTMENT.

NOTIFICATION.

No. 1381L.C.—13th March, 1935.—The following report of the Select Committee on the Indian Stamp (Bengal Amendment) Bill, 1935, with the Bill embodying amendments recommended by the Committee, is hereby published for general information.

Report of the Select Committee on the Indian Stamp (Bengal Amendment) Bill, 1935.

We, the members of the Select Committee of the Bengal Legislative Council to which the Indian Stamp (Bengal Amendment) Bill, 1935, was referred by a motion carried in the Bengal Legislative Council on the 14th February, 1935, have the honour to submit this our report with the Bill embodying amendments recommended by us annexed. All matter recommended to be omitted has been printed in *italics* and enclosed in square brackets, and all new matter inserted has been underlined.

2. The Bill was published in English in the *Calcutta Gazette, Extraordinary*, of the 28th January, 1935.

3. The Committee met for the first time on the 23rd February, 1935, and concluded its sittings on the 25th February, 1935.

4. We do not consider that the Bill has been so altered as to require republication.

5. The changes made in the Bill are as follows :—

Clause 1.—We have added a sub-clause to limit the duration of the enhanced stamp duties to three years.

Clause 5.—We have altered the year "1934" to "1935".

Clause 7.—In item (*17*) we have omitted sub-item (*i*) which sought to raise the stamp duty on the mortgage of a crop when the loan is repayable within three months from the date of the instrument.

In item (*23*) we have omitted those words which sought to raise the duties on a settlement to the level of those payable on a conveyance; and have added a provision to raise the minimum duty on an instrument of settlement from twelve annas to one rupee. The need for this addition arises from the amendment to clause (*c*) of Article No. 5 which is provided in item (*2*) of clause 7.

6. We recommend that the Bill as reported on by us, be passed.

J. A. WOODHEAD,
Member-in-charge.
D. GLADDING.
A. deC. WILLIAMS.
C. G COOPER.
N. K. BASU.
SATISH CHANDRA RAY CHOWDHURY.
A. RAHEEM.
J. N. BASU.
H. S. SUHRAWARDY.
ABUL QUASEM
KHETTER MOHAN RAY.
SUK LAL NAG.
NAGENDRA NARAYAN RAY.
*KESHAB CHANDRA BANERJI.

J. W. McKAY,
Secretary to the Bengal Legislative Council.

*Signed subject to his minute of dissent annexed.

NOTE.—The signature of Sir Hari Sanker Paul had not been received up to the time of printing the Report.

Minute of dissent by Rai Bahadur Keshab Chandra Banerji, M.L.C.

I sign the Report subject to the following minute of dissent.

I am opposed to any increase of taxation until there is a distinct improvement in the economic condition of the country. The proposed enactment will prejudicially affect the interest of the landed classes as well as of businessmen. While there has been a considerable depreciation in the value of landed properties owing to continued slump in the jute market, the margin of profit from business has also been greatly reduced. It is unfortunate that Government should think fit to enhance stamp duties at such a time—an additional imposition which will affect those who have been hard hit by the economic depression. I am not on principle opposed to taxation provided that the people have the capacity to bear the burden and there is necessity for it. On the contrary, those who have a fixed monthly income are the proper persons to be taxed, but we find that they are going to benefit at the expense of others. The restoration of the remaining 5 per cent. cut in the salaries of Government officers only confirms that view.

I am glad that the Select Committee have proposed the addition of a sub-clause to clause (*1*) limiting the duration of the enhanced stamp duties to three years, a change which I greatly welcome; but I think the amendment should take the following form, namely:—

"(*4*) Sections 3, 4, 6 and 7 shall remain in force for three years only or till the introduction of the Reforms if the latter is earlier and thereafter the Indian Stamp Act, 1899, shall have force as if it had not been amended by the said sections."

THE INDIAN STAMP (BENGAL AMENDMENT) BILL, 1935.

(Embodying amendments recommended by the Select Committee.)

[NOTE.—All matter omitted by the Select Committee has been printed in italics and enclosed in square brackets and all new matter inserted has been underlined.]

A

BILL

further to amend the Indian Stamp Act, 1899.

WHEREAS it is expedient to increase the revenues of Bengal and for that purpose further to amend the Indian Stamp Act, 1899, in its application to Bengal, in the manner hereinafter appearing ; II of 1899.

AND WHEREAS the previous sanction of the Governor General has been obtained under sub-section (*3*) of section 80A of the Government of India Act, to the passing of this Act ; 5 & 6 Geo. V, c. 61 ; 6 & 7 Geo. V, c. 37 ; 9 & 10 Geo. V, c. 101.

It is hereby enacted as follows :—

Short title, extent [*and*] commencement and duration.

1. (*1*) This Act may be called the Indian Stamp (Bengal Amendment) Act, 1935.

(*2*) It extends to the whole of Bengal.

(*3*) It shall come into force on such date as the Local Government may, by notification in the *Calcutta Gazette*, appoint.

(*4*) Sections 3, 4, 6 and 7 [except clause (1) thereof] shall remain in force for three years only and thereafter the Indian Stamp Act, 1899, shall have force as if it had not been amended by the said sections.

Application of Act.

2. The Indian Stamp Act, 1899, hereinafter referred to as the said Act, shall, in its application to Bengal, be amended in the manner hereinafter provided.

Amendment of section 4.

3. In sub-section (*1*) of section 4 of the said Act, for the words "one rupee eight annas" the words "two rupees" shall be substituted.

Amendment of section 6.

4. In the proviso to section 6 of the said Act, for the words "one rupee eight annas" the words "two rupees" shall be substituted.

Amendment of sections 6A, 29A, 48A and the heading of Schedule 1A.

5. In sections 6A, 29A, 48A and the heading of Schedule 1A of the said Act, after the figures "1922" wherever they occur, the words, brackets and figures "or the Indian Stamp (Bengal Amendment) Act, [*1934*] 1935" shall be inserted.

Amendment of section 28.

6. In the proviso to sub-section (*4*) of section 28 of the said Act, for the words "one rupee" the words "two rupees" shall be substituted.

Amendment of Schedule 1A.

7. In Schedule 1A of the said Act, the following amendments shall be made, namely :—

(*1*) in Article No. 2 for the words and figures "under section 256 of the Indian Succession Act, 1865, section 6 of the Government Savings Banks Act, 1873, section 78 of the Probate and Administration Act, 1881, or section 9 or section 10 of the Succession Certificate Act, 1889" in the first column, the words and figures "under section 6 of the Government Savings Banks Act, 1873, or section 291 or section 375 or section 376 of the Indian Succession Act, 1925" shall be substituted,

The Indian Stamp (Bengal Amendment) Bill, 1935.

(*Clause 7.*)

(2) in Article No. 5,—

(*a*) for the entry " Three annas " in the second column opposite clause (*a*), the entry " Four annas " shall be substituted,

(*b*) for clause (*b*) the following clause shall be substituted, namely :—

"(*b*)—

(*i*) if relating to the sale of a Government security ; ..	Subject to a maximum of twenty rupees, two annas for every Rs. 10,000 or part thereof, of the value of the security.
(*ii*) if relating to the sale of a share in an incorporated company or other body corporate ;	Two annas for every Rs. 5,000 or part thereof, of the value of the share", and

(*c*) for the entry " Twelve annas " in the second column opposite clause (*c*), the entry " One rupee " shall be substituted ;

(3) in Article No. 8, for the entry "Seven rupees eight annas" in the second column opposite clause (*b*) the entry "Ten rupees" shall be substituted ;

(4) in Article No. 9, for the entry "Seven rupees eight annas" in the second column the entry "Ten rupees" shall be substituted ;

(5) for Article No. 10 the following Article shall be substituted, namely :—

"10. ARTICLES OF ASSOCIATION OF A COMPANY—

(*a*) where the nominal share capital does not exceed one lakh of rupees	Fifty rupees.
(*b*) where the nominal share capital exceeds one lakh of rupees ..	One hundred rupees.

Exemption.

Articles of any association not formed for profit and registered under section 26 of the Indian Companies Act, 1913. *See also* Memorandum of Association of a Company (No. 39)" ; VII of 1913.

(6) in Article No. 12, for the entry "Seven rupees eight annas" in the second column opposite clause (*b*) the entry "Ten rupees" shall be substituted ;

(7) in Article No. 14, for the entry "Six annas" in the second column the entry "Eight annas" shall be substituted ;

(8) in Article No. 15, in the second column—

(*a*) for the entry "One rupee fourteen annas" the entry "Two rupees four annas",

(*b*) for the entry "Two rupees eight annas" the entry "Three rupees", and

(*c*) for the entry "Three rupees two annas" the entry "Three rupees twelve annas",

shall be substituted ;

The Indian Stamp (Bengal Amendment) Bill, 1935.

(*Clause* 4.)

(*9*) in Article No. 18,—

(*i*) for the entry "Three annas" in the second column opposite clause (*a*) the entry "Four annas", and

(*ii*) for the entry "Six annas" in the second column opposite clause (*b*) the entry "Eight annas",

shall be substituted ;

(*10*) in Article No. 22, for the entry "Twelve rupees eight annas" in the second column the entry "Twenty rupees" shall be substituted ;

(*11*) in Article No. 24,—

(*i*) for the entry "Twelve annas" in the second column opposite clause (*i*) the entry "One rupee", and

(*ii*) for the entry "One rupee eight annas" in the second column opposite clause (*ii*) the entry "Two rupees",

shall be substituted ;

(*12*) in Article No. 25,—

(*i*) in clause (*a*) for the words "one rupee eight annas" in the first column, the words "two rupees", and

(*ii*) for the entry "One rupee eight annas" in the second column opposite clause (*b*) the entry "Two rupees",

shall be substituted ;

(*13*) in Article No. 29, for the entry "Two rupees" in the second column the entry "Five rupees" shall be substituted ;

(*14*) in Article No. 38, for the entry "Twelve rupees eight annas" in the second column the entry "Fifteen rupees" shall be substituted ;

(*15*) in Article No. 39, for clause (*b*) the following clause shall be substituted, namely :—

"(*b*) if not so accompanied—

(*i*) where the nominal share capital does not exceed one lakh of rupees	..	Eighty rupees,
(*ii*) where the nominal share capital exceeds one lakh of rupees	..	One hundred and thirty rupees" ;

(*16*) in Article No. 40, for the entry "Twelve annas" in the second place where it occurs in the second column opposite clause (*c*) the entry "One rupee" shall be substituted ;

(*17*) in Article No. 41,—

(*i*) *for the entry "One and half annas" in both places where it occurs in the second column opposite clause* (*a*) *the entry "Two annas" and*]

[(*ii*)] for the entry "Three annas" in both places where it occurs in the second column opposite clause (*b*) the entry "Four annas", shall be substituted ;

The Indian Stamp (Bengal Amendment) Bill, 1935.

(*Clause 7.*)

(*18*) in Article No. 43,—

(*i*) for the entry "Three annas" in the second column opposite clause (*a*) the entry "Four annas" shall be substituted, and

(*ii*) for clause (*b*) the following clauses shall be substituted, namely :-

"(*b*) of any stock or marketable security exceeding in value twenty rupees but not being a Government security ;	Two annas for every Rs. 5,000 or part thereof of the value of the stock or security.
(*c*) of a Government security	Subject to a maximum of twenty rupees, two annas for every Rs. 10,000 or part thereof of the value of the security" ;

(*19*) in Article No. 45, in provisos (*a*) and (*c*) in the second column for the words "twelve annas" the words "one rupee" shall be substituted ;

(*20*) in Article No. 48,—

(*i*) for the entry "Twelve annas" in the second column opposite clause (*a*) the entry "One rupee",

(*ii*) for the entry "One rupee eight annas" in the second column opposite clause (*c*) the entry "Two rupees",

(*iii*) for the entry "Seven rupees eight annas" in the second column opposite clause (*d*) the entry "Ten rupees",

(*iv*) for the entry "Fifteen rupees" in the second column opposite clause (*e*) the entry "Twenty rupees", and

(*v*) for the words "One rupee eight annas" in the second column opposite clause (*g*) the words "Two rupees",

shall be substituted ;

(*21*) in Article No. 55, for the entry "Seven rupees eight annas" in the second column opposite clause (*b*) the entry "Ten rupees" shall be substituted ;

(*22*) in Article No. 57, for the entry "Seven rupees eight annas" in the second column opposite clause (*b*) the entry "Ten rupees" shall be substituted ;

(*23*) in Article No. 58, for the words, [*brackets and figures "Bottomry Bond (No. 16)" in both places where they occur*] "twelve annas" in the second column opposite clause[*s*] A [*and B,*] the words, [*brackets and figures "Conveyance (No 23)"*] "one rupee" shall be substituted ;

(*24*) in Article No. 62, for the entry "Seven rupees eight annas" in the second column opposite clause (*c*) (*ii*) the entry "Ten rupees" shall be substituted ; and

(*25*) in Article No. 65, for the entry "Six annas" in the second column the entry "Eight annas" shall be substituted.

J. W. McKAY,

Secy. to the Bengal Legis. Council.

BENGAL LEGISLATIVE COUNCIL DEPARTMENT.

NOTIFICATION.

No. 1382L.C.—13th March, 1935.—The following report of the Select Committee on the Bengal Electricity Duty Bill, 1935, with the Bill embodying amendments recommended by the Committee, is hereby published for general information.

Report of the Select Committee on the Bengal Electricity Duty Bill, 1935.

We, the members of the Select Committee of the Bengal Legislative Council to which the Bengal Electricity Duty Bill, 1935, was referred by a motion carried in the Bengal Legislative Council on the 12th February, 1935, have the honour to submit this our report with the Bill embodying amendments recommended by us annexed. All matter recommended to be omitted by the Select Committee has been printed in *italics* and enclosed in square brackets and all new matter recommended to be inserted has been underlined.

2. The Bill was published in English in the *Calcutta Gazette, Extraordinary*, of the 28th January, 1935.

3. We do not consider that the Bill has been so altered as to require republication.

4. The Committee met for the first time on the 19th February, 1935, and concluded its sittings on the 27th February, 1935.

5. The more important changes made in the Bill are as follow :—

Clause 1.—We have added to sub-clause (*3*) a provision to limit the duration of the Act to three years.

Clause 2.—The addition of the words "other than a distributing licensee" is necessary, as otherwise in certain cases duty would be leviable twice on the same energy.

Clause 3.—Duty is leviable only on energy consumed for the purpose of lights and fans and, as in practice the amount of energy so consumed is measured by meters after transmission and transformation, the words "excluding losses of energy in transmission and transformation" are unnecessary.

We have recast the proviso so that it provides for the exemption also of mines, places of public worship, burial-grounds, vessels and certain charitable institutions.

Clause 3A.—This new clause exempts newly-formed electrical undertakings during the first three years following the date on which they commence supply.

Clauses 4, 5 and 6.—The Bill as originally drafted made no express provision for the collection and payment of the duty leviable on energy generated by persons who are not licensees. We have added a new sub-clause to clause 4 to remove this defect, and have made consequential changes in sub-clause (*1*) of clause 4 and in clauses 5 and 6.

Clause 7.—This clause has been redrafted so as to include provision for the recovery also of duty leviable on energy other than energy supplied by a licensee.

Clauses 8 and 9.—We consider it unnecessary to provide a penalty for the breach, without distinction, of all the rules contemplated by clause 9, and have made amendments accordingly.

Clause 8A.—We have added this new clause, mainly on administrative grounds, to exempt small private generating plants.

The First Schedule.—*Item* (*2*).—The scale contained in this item is intended to apply only where the unmetered supply of energy is by a licensee. We have amended the item to make this clear.

The Second Schedule.—*Item* (*4a*).—This addition is consequential on our inclusion of mines in the proviso to clause 3.

Item (*8*).—This item replaces explanation 2(*a*) of the Schedule as originally drafted, makes its meaning clearer and provides in addition for the exemption of small shops.

Explanations 2 and 3.—The changes here are consequential on the addition of item (8).

6. We recommend that the Bill, as reported on by us, be passed.

J. A. WOODHEAD,
Member-in-charge.

D. GLADDING.

A. DEC. WILLIAMS.

A. R. E. LOCKHART.

F. T. HOMAN.

*J. N. BASU.

*SATYENDRA KUMAR DAS.

*N. K. BASU.

*A. F. M. ABDUR-RAHMAN.

EMADUDDIN AHMED.

ALIMUZZAMAN CHAUDHURI.

SARAT CHANDRA BAL.

S. W. REDCLIFT.

P. K. GUHA.

J. W. McKAY,
Secretary to the Bengal Legislative Council.

*Signed subject to his minute of dissent annexed.
NOTE.—The signature of Babu Jitendralal Bannerjee had not been received up to the time of publishing the Report.

Minute of dissent by Babu Jatindra Nath Basu, M.L.C.

The limitation of the period during which the Bill is to operate and the exclusion of new concerns for 3 years will remove some of the serious objections to the measure. But the price that consumers in many localities outside Calcutta have to pay for energy is not economical to the consumers. The measure should provide for exemption from payment of duty of those consumers who pay more than four annas per unit.

Minute of dissent by Rai Bahadur Satyendra Kumar Das, M.L.C.

I sign the report subject to the following minute of dissent :—

As 80 per cent. of the amount of the proposed taxation will be available from the city of Calcutta alone the operation of the Act should be limited to Calcutta only. The unit charge being the lowest in Calcutta the number of units under item (7) of the Second Schedule under the head " Exemptions " should be 12 units for Calcutta, and 24 units for mufassal towns, as chargeable unit rate in Calcutta is practically less than half the rate charged in mufassal towns. I reserve my other comments for the next opportunity during the consideration of the Bill in the Council.

Minute of dissent by Mr. Narendra Kumar Basu, M.L.C.

Clause 3.—In the proviso to clause 3, I would add " girls' schools ". It is well known that most girls' schools in the province are run at a loss and the exemption of these from the operation of the Act would be in accordance with the professed solicitude of the Government for female education in the province.

Minute of dissent by Khan Bahadur A. F. M. Abdur-Rahman, M.L.C.

I sign the report subject to my note of dissent that in the Second Schedule in item No. (7) in place of 12 units there should be at least a minimum of 18 units otherwise it will be practically no relief to the middle class people.

THE BENGAL ELECTRICITY DUTY BILL, 1935.

(Embodying amendments recommended by the Select Committee.)

[NOTE.—All matter omitted by the Select Committee has been printed in italics and enclosed in square brackets and all new matter inserted has been underlined.]

A

BILL

to levy a duty on electrical energy consumed for lights and fans in Bengal.

WHEREAS it is expedient to levy a duty on electrical energy consumed for lights and fans in Bengal ;

AND WHEREAS the previous sanction of the Governor General has been obtained under sub-section (*3*) of section 80A of the Government of India Act to the passing of this Act ; 5 & 6 Geo. V, c. 61 ; 6 & 7 Geo. V, c. 37 ; 9 & 10 Geo. V, c. 101.

It is hereby enacted as follows :—

Short title, extent, [*and*] commencement and duration.

1. (*1*) This Act may be called the Bengal Electricity Duty Act, 1935.

(*2*) It extends to the whole of Bengal.

(*3*) It shall come into force on such date as the Local Government may by notification in the *Calcutta Gazette* appoint and shall continue in force for three years only.

Definitions.

2. In this Act, unless there is anything repugnant in the subject or context, — [*Cf.* Bom. Act II of 1932, s. 4.]

(*1*) " consumer " means any person, other than a distributing licensee, who is supplied with energy by a licensee ;

(*2*) " energy " means electrical energy ; [*when generated, transmitted, supplied or used for any purpose except the transmission of a message* ;]

(*3*) " licensee " means any person licensed under Part II of the Indian Electricity Act, 1910, to supply energy and includes any person who has obtained the sanction of the Local Government under section 28 of that Act ; and IX of 1910.

(*4*) " prescribed " means prescribed by rules made under this Act.

Duty on units of energy consumed.

3. There shall be charged, levied and paid to the Government of Bengal, on the units of energy consumed for the purpose of lights or fans or both [*and fans excluding losses of energy in transmission and transformation*], a duty (hereinafter referred to as "electricity duty") at the rates specified in the First Schedule : [*Cf.* Bom. Act II of 1932, s. 5.]

[*Provided that electricity duty shall not be leviable on the units of energy consumed by Government or by or in respect of any local authority, railway administration, tramway company, industrial undertaking, institution or class of persons specified in the Second Schedule, except to the extent specified therein.*]

The Bengal Electricity Duty Bill, 1935.

(*Clauses 3A, 4.*)

Provided that electricity duty shall not be leviable on the units of energy consumed—

(*a*) by Government, except to the extent specified in the Second Schedule ;

(*b*) by, or in respect of, any—

(*i*) local authority ;

(*ii*) railway administration, as defined in the Indian Railways Act, 1890 ; IX of 1890.

(*iii*) tramway company ;

(*iiia*) mine, as defined in the Indian Mines Act, 1923 ; IV of 1923.

(*iv*) industrial undertaking ;

(*v*) institution or class of persons specified in the Second Schedule ;

except to the extent specified in the second schedule.

(*c*) in any—

(*i*) place of public worship, public burial or burning-ground or other place for the disposal of the dead ;

(*ii*) premises declared by the Local Government to be used exclusively for purposes of public charity ;

(*iii*) vessel, whether sea-going or inland.

Exemption of newly-formed undertakings.

3A. (*1*) Notwithstanding anything contained in section 3, electricity duty shall not be leviable on energy supplied by a licensee until the expiry of three years from the date on which energy was first supplied in the area of supply specified in his license :

Provided that, if a licensee ceases to supply energy in any area of supply or if his license is revoked, and thereafter another licensee supplies energy in such area, the Local Government may in its discretion, by order exempt the energy supplied by such other licensee from the levy of electricity duty for such period as may be specified in the order.

(*2*) No modification in any area of supply shall operate to extend the period of exemption mentioned in sub-section (*1*) in respect of the whole or any part of the area as modified.

Payment of electricity duty.

4. (*1*) [*Every*] In the case of energy supplied by a licensee, the licensee shall collect and pay to the Local Government, at the prescribed time and in the prescribed manner, the electricity duty payable under [*this Act*] section 3 on the units of energy supplied by him to consumers for the purpose of lights and fans. The duty so payable shall be a first charge on the amount recoverable by the licensee for the energy supplied by him and shall be a debt due by him to the Local Government : [*Cf.* Bom. Act II of 1932, s. 6.]

Provided that the licensee shall not be liable to pay the duty in respect of any energy supplied by him for which he has been unable to recover his dues.

(*2*) Where any person fails or neglects to pay, at the prescribed time and in the prescribed manner the amount of electricity duty due from him, the licensee may, without prejudice to the right of the Local Government to recover the amount under section 7, and after giving not less than

The Bengal Electricity Duty Bill, 1935.

(*Clauses 5—8.*)

seven clear days' notice in writing to such person, cut off the supply of energy to such person ; and he may, for that purpose, exercise the power conferred on a licensee by sub-section (*1*) of section 24 of the Indian Electricity Act, 1910, for recovery of any charge or sum due in respect of energy supplied by him. IX of 1910.

(*3*) The licensee shall be entitled, for his cost of collection of the duty, to a rebate of such percentage as may be determined by the Local Government on the amount of the duty collected and paid by him under sub-section (*1*).

(*4*) In the case of energy other than energy supplied by a licensee the person who generated such energy shall pay to the Local Government at the prescribed time and in the prescribed manner the electricity duty payable under section 3 on units of such energy.

[*Licensee*] obligation to keep books of account and submit returns.

5. Every licensee, and every person liable to pay such duty under sub-section (*4*) of section 4 shall, unless he is exempt from payment of electricity duty under the proviso to section 3, keep books of account in the prescribed form and submit to the Local Government or to the prescribed officer returns in the prescribed form at the prescribed times, showing the units of energy supplied, [*by him to each consumer or consumed*] generated or consumed by him, as the case may be, [*for the purpose of lights and fans*] and the amount of the duty payable thereon and recovered or paid by him under section 4. [*Cf.* Bom. Act II of 1932, s. 7.]

Inspecting Officers.

6. (*1*) The Local Government may, by notification in the *Calcutta Gazette*, appoint inspecting officers to inspect the books of account required by section 5 to be kept. [*by licensees.*] Such officers shall perform such duties and exercise such powers as may be prescribed for the purpose of carrying into effect the provisions of this Act and the rules made thereunder. [*Cf.* Bom. Act II of 1932, s. 8.]

(*2*) Every officer appointed under this section shall be deemed to be a public servant within the meaning of section 21 of the Indian Penal Code. [*Cf.* Ben. Act V of 1922, s. 11(3).] XLV of 1860.

[*Recoveries.*]

[**7.** *Any sum due on account of electricity duty, if not paid at the prescribed time and in the prescribed manner, shall be recoverable, at the discretion of the Local Government, either from the consumer, or, subject to the proviso to sub-section (1) of section 4, from the licensee, as a public demand.*] [*Cf. Bom. Act II of 1932, s. 9.*]

Recoveries.

7. Any sum due on account of electricity duty, if not paid at the prescribed time and in the prescribed manner shall be recoverable, as a public demand—

(*a*) in the case of energy supplied by a licensee, at the discretion of the Local Government, either from the consumer, or, subject to the proviso to sub-section (*1*) of section 4, from the licensee ; and

(*b*) in the case of other energy, from the person liable to pay such duty under sub-section (*4*) of section 4.

Penalties.

8. If any person required by section 5 to keep books of account or to submit returns fails to keep such books in the prescribed form, or to submit such returns in the prescribed form at the prescribed times or if any person intentionally obstructs an inspector appointed under section 6 in the exercise of his powers and duties under this Act and the [*Cf.* Bom. Act II of 1932, s. 10.]

The Bengal Electricity Duty Bill, 1935.

(Clauses 8A, 9, The First Schedule.)

rules made thereunder [*or contravenes any rule made under section 9*], he shall be liable, on conviction before a Magistrate, to a fine not exceeding fifty rupees.

Exemption of small generating plants.

8A. This Act shall not apply to energy generated by a plant having a capacity not exceeding two and a half kilowatts.

Power to make rules.

9. (*1*) The Local Government may make rules to carry out the purposes of this Act. [*Cf.* Bom. Act II of 1932, s. 11.]

(*2*) In particular, and without prejudice to the generality of the foregoing power, such rules may provide for all or any of the following matters, namely :—

(*a*) the time and manner of payment of the electricity duty under section 4 ;

(*b*) the form of the books of account to be kept [*and*], the times at which, the form in which and the officer to whom, the returns required by section 5 shall be submitted ;

(*c*) the duties and powers of inspecting officers ; and

(*d*) any other matter for which there is no provision or insufficient provision in this Act and for which provision is, in the opinion of the Local Government, necessary for giving effect to the provisions of this Act.

(*3*) in making a rule under sub-section (*1*) or sub-section (*2*) the Local Government may provide that a breach of it shall be punishable with a fine not exceeding fifty rupees.

THE FIRST SCHEDULE.

(See section 3.)

[*Cf.* Bom. Act II of 1932, First Schedule.]

RATES OF DUTY.

(*1*) In respect of all premises not falling under article (*2*).	Six pies for each unit of energy consumed.
(*2*) In respect of all premises where the supply of [*electricity*] energy by a licensee is unmetered, for—	
	Annas per mensem.
every lamp of less than 30 watts ..	2
every lamp of 30 watts or more but less than 40	3
every lamp of 40 watts or more but less than 60	4
every lamp of 60 watts or more but not exceeding 100	6
and for every additional 15 watts or fraction thereof in excess of 100 in any lamp	1

The Bengal Electricity Duty Bill, 1935.

THE SECOND SCHEDULE.

(See proviso to section 3.)

[*Cf.* Bom. Act II of 1932, Second Schedule.]

EXEMPTIONS.

(*1*) The Government, save in respect of premises used for residential purposes ;

(*2*) a railway administration, [*as defined in clause* (*6*) *of section 3 of the Indian Railways Act, 1890*] save in respect of premises used for residential purposes ; [*IX of 1890.*]

(*3*) a local authority, save in respect of premises used for residential purposes ;

(*4*) a tramway company, save in respect of premises used for residential [*and*] or office purposes ;

(*4a*) a mine, save in respect of premises used for residential or office purposes ;

(*5*) an industrial undertaking, save in respect of premises used for residential [*and*] or office purposes ;

(*6*) a hospital or dispensary which is not maintained for private gain ;

(*7*) any consumer using not more than twelve units in any one month ;

(*8*) any consumer, being a landlord, or other person who supplies energy to one-roomed or two-roomed shops or tenements in any one building, in respect of the energy supplied to any such shop or tenement in which not more than twelve units of energy have been used in any one month.

Explanation (*1*).—For the purposes of exemption (*5*), "industrial undertaking" means all buildings or premises wherein or within the precincts of which any manufacturing process [as defined in clause (*g*) of section 2 of the Indian Factories Act, 1934] is carried on. XXV of 1934.

Explanation (*2*).—For the purposes of exemption (*7*)

[(*a*) "*consumer*" *shall be deemed to include a landlord or a person who supplies electrical energy to one or two-roomed tenements in any one building in respect of any one of which tenements not more than twelve units of energy have been used in any one month ;*

(*b*) *whether more than twelve units have been used in respect of any one tenement in any one month shall be determined by dividing the total number of units used in any one building by the number of tenements in that building ; and*]

[(*c*)] in the premises referred to in Article (*2*) of the First Schedule every 10 watts shall be deemed to consume one and a half units in a month.

Explanation (*3*).—For the purposes of exemption (*8*), whether more than twelve units of energy have been used in any one month in any shop or tenement for which there is no meter or sub-meter shall be determined by dividing the total number of units supplied during that month to such shops or tenements in the building by the number of such shops or tenements therein.

J. W. MCKAY,
Secy. to the Bengal Legis. Council.

BENGAL LEGISLATIVE COUNCIL DEPARTMENT.

NOTIFICATION.

No. 1383L.C.—13th March, 1935.—The following report of the Select Committee on the Court-fees (Bengal Second Amendment) Bill, 1935, with the Bill embodying amendments recommended by the Committee, is hereby published for general information.

Report of the Select Committee on the Court-fees (Bengal Second Amendment) Bill, 1935.

We, the members of the Select Committee of the Bengal Legislative Council to which the Court-fees (Bengal Amendment) Bill, 1935, was referred by a motion carried in the Bengal Legislative Council on the 13th February, 1935, have the honour to submit this our report with the Bill emboying amendments recommended by us annexed.

All matter recommended to be omitted by the Select Committee has been printed in italics and enclosed in square brackets, and all new matter inserted has been underlined.

2. The Bill was published in English in the *Calcutta Gazette, Extraordinary*, of the 28th January, 1935.

3. The Committee met for the first time on the 23rd February, 1935, and concluded its sitting on that day.

4. We do not consider that the Bill has been so altered as to require republication.

5. The changes made in the Bill are as follows :—

Short title.—We have amended the Short Title consequentially on the passing of a prior Court-fees (Bengal Amendment) Bill by the Council on the 25th February, 1935.

Clauses 1 and 5.—We have amended these so as to limit the duration of the enhanced court-fees to three years.

The amendments made by the Bill in regard to certain references to other enactments in the First and Second Schedules to the Act which are now out of date, and the amendment made by clause 5 of the Bill in Article 12 of the First Schedule to the Act with a view to remove certain doubts as to the interpretation of the Article will, of course, be permanent.

New clause 7.—We have inserted a new clause 7 saving from the operation of the enhanced rates under the Bill any probate, letters of administration or certificate under the Indian Succession Act, 1925, in respect of which the fee has already been paid before the commencement of the new Act, but which has not issued.

6. We recommend that the Bill, as reported on by us, be passed.

J. A. WOODHEAD,
Member-in-charge.
D. GLADDING.
S. C. NANDY.
N. K. BASU.
SATISH CHANDRA MUKHERJI.
J. N. BASU.
A. DEC. WILLIAMS.
W. H. THOMPSON.
S. M. BOSE.
S. C. MITTRA.
AKSHOY KUMAR SEN.
ALIMUZZAMAN CHAUDHURI.
TAMIZUDDIN KHAN.
AMULYADHAN RAY.

J. W. MCKAY,
Secretary to the Bengal Legislative Council.

NOTE.—The signature of Khan Sahib Maulvi Muhammed Basir Uddin had not been received up to the time of printing the Report.

THE COURT-FEES (BENGAL SECOND AMENDMENT) BILL, 1935.

(Embodying amendments recommended by the Select Committee.)

[NOTE.—All matter omitted by the Select Committee has been printed in italics and enclosed in square brackets and all new matter inserted has been underlined.]

A

BILL

further to amend the Court-Fees Act, 1870.

WHEREAS it is expedient to amend the Court-fees Act, 1870, in its application to Bengal in the manner hereinafter appearing ; VII of 1870.

AND WHEREAS the previous sanction of the Governor General has been obtained under sub-section (*3*) of section 80A of the Government of India Act to the passing of this Act ; 5 & 6 Geo. V, c. 61 ; 6 & 7 Geo. V, c. 37 ; 9 & 10 Geo. V, c. 101.

It is hereby enacted as follows :—

Short title, extent, [*and*] commencement and duration.

1. (*1*) This Act may be called the Court-fees (Bengal Second Amendment) Act, 1935.

(*2*) It extends to the whole of Bengal.

(*3*) It shall come into force on such date as the Local Government may, by notification in the *Calcutta Gazette*, appoint.

(*4*) Clauses (*a*) and [(*b*) of section 4 and sub-section (*2*) of section 5 shall remain in force for three years only and thereafter the Court-fees Act, 1870 shall have force as if it had not been amended by the said clauses and sub-section.

Application of Act.

2. The Court-fees Act, 1870, hereinafter referred to as the said Act, shall, in its application to Bengal, be amended in the manner hereinafter provided.

Amendment of Schedule I, Article 8.

3. In Article 8 of the first schedule to the said Act, for the figures "1879" in the first column the figures "1899" shall be substituted.

Amendment of Schedule I, Article 11.

4. In Article 11 of the first schedule to the said Act,—

(*a*) after the words "in excess of a lakh of rupees" in the second column the words "up to two lakhs and fifty thousand rupees" shall be inserted ;

(*b*) in the second and third columns, before the proviso in the second column, the following shall be inserted, namely :—

"and

when such amount or value exceeds two lakhs and fifty thousand rupees, on the portion of such amount or value which is in excess of two lakhs and fifty thousand rupees up to three lakhs of rupees,	Five and a half per centum.
and	
when such amount or value exceeds three lakhs of rupees, on the portion of such amount or value which is in excess of three lakhs of rupees up to four lakhs of rupees,	Six per centum.
and	

The Court-Fees (Bengal Second Amendment) Bill, 1935.

(Clause 5.)

when such amount or value exceeds four lakhs of rupees, on the portion of such amount or value which is in excess of four lakhs of rupees up to five lakhs of rupees,	Six and a half per centum.
and	
when such amount or value exceeds five lakhs of rupees on the portion of such amount or value which is in excess of five lakhs of rupees : "	Seven per centum.

and

(*c*) in the proviso for the words and figures "the Succession Certificate Act, 1889" the words and figures "the Indian Succession Act, 1925" shall be substituted.

Schedule I of new Article 12.

5. (*1*) For Article 12 of the first schedule to the said Act the following article shall be substituted, namely :—

"12. Certificate under the Indian Succession Act, 1925.	When the amount or value of any debt or security specified in the certificate under section 374 of the Act exceeds one thousand rupees,	Two per centum on the first ten thousand rupees, three per centum on the next forty thousand rupees, four per centum on the next fifty thousand rupees, five per centum [*on the next one lakh and fifty thousand rupees,* *five and a half per centum on the next fifty thousand rupees,* *six per centum on the next one lakh of rupees,* *six and a half per centum on the next one lakh of rupees,* and *seven per centum*] on the remainder of such amount or value.
	When the aggregate amount or value of any debts or securities specified in the certificate and of any debts or securities to which the certificate has been extended under section 376 of the Act exceeds one thousand rupees.	In respect of such portion of the aggregate amount or value as consists of the amount or value of debts or securities so specified, the fee hereinbefore provided in that behalf in this article and three per centum on such portion of the first ten thousand rupees, four and a half per centum on such portion of the next forty thousand rupees, six per centum on such portion of the next fifty thousand rupees, seven and a half per centum [*on such portion of the next one lakh and fifty thousand rupees,* *eight and a quarter per centum on such portion of the next fifty thousand rupees,* *nine per centum on such portion of the next one lakh of rupees,* *nine and three-quarters per centum on such portion of the next one lakh of rupees,* *and* *ten and a half per centum*] on such portion of the remainder of such aggregate amount or value as consists of the amount or value of debts or securities to which the certificate has been extended. *Note.*—(*1*) The amount of a debt is its amount, including interest on the day on

The Court-Fees (Bengal Second Amendment) Bill, 1935.

(*Clauses 6, 7.*)

which the inclusion of the debt in the certificate is applied for, so far as such amount can be ascertained.

(2) Whether or not any power with respect to a security specified in a certificate has been conferred under the Act and where such a power has been so conferred, whether the power is for the receiving of interest or dividends on, or for the negotiation or transfer of the security, or for both purposes, the value of the security is its market-value on the day on which the inclusion of the security in the certificate is applied for, so far as such value can be ascertained."

(2) In the third column of the said article as amended by sub-section (1)—

(a) after the words " five per centum " the following shall be inserted, namely :—

" on the next one lakh and fifty thousand rupees,
five and a half per centum on the next fifty thousand rupees,
six per centum on the next one lakh of rupees,
six and a half per centum on the next one lakh of rupees,

and

seven per centum "

(b) after the words " seven and a half per centum " the following shall be inserted, namely :—

" on such portion of the next one lakh and fifty thousand rupees,
eight and a quarter per centum on such portion of the next fifty thousand rupees,
nine per centum on such portion of the next one lakh of rupees,
nine and three-quarters per centum on such portion of the next one lakh of rupees,

and

ten and a half per centum. "

Amendment of Schedule II, Article 18.

6. In Article 18 of the second schedule to the said Act, for the words and figures "section 326 of the Code of Civil Procedure " the words and figures "paragraph 17 of the second schedule to the Code of Civil Procedure, 1908 " shall be substituted.

Exemption of certain probates, etc.

7. Nothing in this Act shall apply to any probate, letters of administration or certificate under the Indian Succession Act, 1925, in respect of which the fee payable under the law for the time being in force has been paid before the commencement of this Act, but which has not issued. XXXIX of 1925.

J. W. McKAY,
Secy. to the Bengal Legis. Council.

BENGAL LEGISLATIVE COUNCIL DEPARTMENT.

NOTIFICATION.

No. 1384L.C.—13th March, 1935.—The following report of the Select Committee on the Bengal Tobacco (Sales Licensing) Bill, 1935, with the Bill embodying amendments recommended by the Committee, is hereby published for general information.

Report of the Select Committee on the Bengal Tobacco (Sales Licensing) Bill, 1935.

We, the members of the Select Committee of the Bengal Legislative Council to which the Bengal Tobacco (Sales Licensing) Bill, 1935, was referred by a motion carried in the Bengal Legislative Council on the 14th February, 1935, have the honour to submit this our report with the Bill embodying amendments recommended by us annexed. All matter recommended to be omitted by the Select Committee has been printed in *italics* and enclosed in square brackets, and all new matter recommended to be inserted has been underlined.

2. The Bill was published in English in the *Calcutta Gazette, Extraordinary*, of the 28th January, 1935.

3. We do not consider that the Bill has been so altered as to require republication.

4. The Committee met for the first time on the 19th February, 1935, and concluded its sittings on the 6th March, 1935.

5. The more important changes made in the Bill are as follows:—

Clause 1.—We have added a provision to sub-clause (*3*) to limit the duration of the Act to three years.

Clause 2.—We have expanded the definition of "Collector," outside Calcutta, so that it may cover any officer, *e.g.*, an Additional Collector of a district, duly empowered by Government.

We have added a definition of "Superintendent of Excise" so as to enable an Inspector of Excise who is in charge of a district to exercise the powers of a Superintendent under the Act.

Clause 3.—We have fixed a period of time in sub-clause (*1*) instead of leaving a period to be prescribed by rules.

Clause 6.—We have made it clearer that the penalty in clause 6 refers to the selling of tobacco without a license.

Clause 8.—We have removed from the Bill all provisions for, or regarding, the confiscation of tobacco or other articles. Hence the changes in this clause, our amendment of sub-clause (*b*) of clause 12 and the deletion of clauses 14 and 15.

Clause 11.—In sub-clause (*c*) we have restricted the power of entry to Excise officers not below the rank of a Sub-Inspector of Excise.

Clause 12.—We have provided in sub-clause (*a*) that the arrest of any person without a warrant shall be limited to cases where the person refuses to give his name and address or gives a name and address which is believed to be false.

Clauses 14 and 15.—Omitted, *vide* explanation against clause 8.

Clause 18.—We have added sub-clause (*1a*) to make the intention clearer.

Clauses 21 and 21A.—These jointly replace clause 21 as originally drafted, and are intended to make clearer the procedure contemplated.

Clauses 24 and 26 (3).—The original drafts were defective inasmuch as they made provision for Collector's warrants only. We have removed this defect.

Clause 29.—The changes made are consequential on changes made in clause 3 (*1*) and clause 11.

6. We recommend that the Bill, as reported on by us, be passed.

J. A. WOODHEAD,
Member-in-charge.

D. GLADDING.

A. DEC. WILLIAMS.

D. N. MUKHERJI.

K. M. AFZAL.

SARAT KUMAR ROY.

ABDUL HAMID SHAH.

H. R. NORTON.

SAILESWAR SINGH ROY.

HEM CHANDRA ROY CHOUDHURI.

S. K. SAHANA.

*N. C. SEN GUPTA.

*PANCHANAN BARMA.

*TAMIZUDDIN KHAN.

*ABUL KASEM.

J. W. McKAY,
Secretary to the Bengal Legislative Council.

* Signed subject to his minute of dissent annexed.

Minute of dissent by Dr. Naresh Chandra Sen Gupta, M.L.C.

I regret I cannot agree with the scheme of the Bill.

It must be remembered that the Bill is not meant to be penal, but only a revenue measure designed to recover a very small amount of revenue from sellers of tobacco. On payment of the very small revenue of Rs. 6 or less the holder of the license is to be able to sell an unlimited quantity of tobacco unlike an excise licensee who has to pay the tax according to the quantity of the excisable article sold.

Yet this Bill prescribes penalties out of all proportion to the requirements of the case and lays down an elaborate procedure mainly borrowed from the Excise Act which would be wholly unnecessary for the end in view, and, if abused, might lead to utterly needless harassment of persons for a small matter of Rs. 3 or Rs. 6.

The correct model for a measure of this kind intended to realise small revenues is not to be found in the Excise Acts which are designed for a different category of revenue offences but in the provisions of the Railways Act for realisation of fares from passengers by penalising travelling without tickets (Sections 113 and 132). Section 113 of the Railways Act provides that for travelling without a ticket or without payment of a proper fare the offender has to pay a small fixed penalty, not exceeding the single fare payable on the difference payable, to the authorised railway officer demanding the same. Sub-section (*4*) of the section provides that on his failure to pay the fare plus the penalty on demand a magistrate may realise the amount as a fine and pay it to the Railway administration.

An alternative model is provided by the Public Demands Recovery Act under which a certificate may be issued and executed by the Certificate Officer after hearing objections, if any, leaving it open to the Certificate debtor to go to the Civil Court in case he contests his liability to pay.

On these lines I should suggest the omission of the clauses 6-9, 13-18, 20-26 and substitute in their place one or the other of the following alterations:—

I.

"*Clause 6.*—(*1*) Whoever sells or for the purpose of sale exposes or keeps tobacco in contravention of section 4 shall be liable to pay on demand by an excise officer authorised in this behalf by any general or special order of any Excise Officer not below the rank of an Inspector of Excise in charge of a district, a penalty hereinafter in this section mentioned, in addition to the prescribed license fee payable by him unless he has taken out a license already.

Section 113 Railways Act.

(*2*) The penalty referred to in sub-section (*1*) shall be—

(*a*) Where the person does not hold a license granted under section 5, a sum equal to twice the amount of the license fee payable by him under the rules;

(*b*) Where he holds a license under section 5 but has acted in contravention of the terms of the license, a sum equal to the amount of the license fee payable by him.

(*3*) If such person fails or refuses to pay the amount payable by him under this section on demand by an Excise Officer authorised as hereinbefore provided, the sum payable by him shall, on application made to any Magistrate by any Excise Officer authorised in this behalf, be recoveredby a Magistrate from him as if it were a fine imposed by the Magistrate on the person charged with the same.

Clause 7.—(*1*) If any person fails or refuses to pay the amount demanded from him under section 6, and there is reason to believe that he would abscond or his name and address are unknown or he refuses on demand to give his name and address or there is reason to believe that the name or address given by him is incorrect, any excise officer authorised to demand such payment, or any Police Officer or other person that such excise officer may call to his aid, may, without warrant or other authority, arrest him.

Railways Act Section 132.

(*2*) The person arrested shall be released on his giving bail, or if his true name and address are ascertained, on his giving a bond without sureties for appearance before a Magistrate when required.

(*3*) If the person cannot give bail or his true name and address cannot be ascertained, he shall, without the least possible delay, be taken before the nearest Magistrate having jurisdiction."

II.

The second alternative which I first placed before the Select Committee which followed the same outline of the Certificate procedure minus the appeal to the Civil Court was as follows:—

"*Section 6.*—Whoever sells, exposes or keeps for sale tobacco in contravention of section 4 shall be liable to a penalty equal to twice the amount of the license fee payable by him, in addition to the fee payable if not paid by him.

Section 7.—Whenever a Collector, Excise Commissioner or a Superintendent of Excise is satisfied on the report of an Excise Officer or otherwise and upon making such further investigation as he may deem fit that any person has sold, or for the purpose of sale exposed or kept, or is selling or for the purposes of sale is exposing or keeping tobacco in contravention of section 4 within the jurisdiction of such Collector or within the local area over which the Commissioner of Excise or Superintendent, as the case may be, has authority, he may make an order calling upon such person to pay the penalty payable under section 6 together with the prescribed license fee, if not paid by him, and authorise any excise officer to execute the order.

Any person against whom an order for payment has been made shall, on payment of the sum ordered to the officer executing the order be entitled to be granted a license under section 4 for the period covering the date of the offence.

Provided that any person against whom such an order has been made shall have the liberty, notwithstanding that he has paid the amount, to apply to a Magistrate having jurisdiction in the local area for a refund of the amount so paid by him. And, if the Magistrate is satisfied upon the evidence adduced before him that the penalty was improperly levied or that it was, in the circumstances of the case, excessive he may direct that the amount so paid by the offender on such portion thereof as may have been improperly levied be refunded to him.

Any amount ordered to be paid under section 7 shall be realisable as a fine under section 386, Cr. P. Code by a Magistrate having jurisdiction in the local area where the offence has been committed or where the person against whom the order has been made resides or carries on his business".

There can be no question that either of these two procedures would be simpler, less expensive and more convenient to the executive than the one in the Bill. Persons improperly charged will, at their choice, have the protection provided by trial before a Magistrate. While others who have broken the law will be saved the trouble and harassment of arrest, searches, trials in distant courts and of the infinite worrying attentions of excise officers, by simply paying the penalty.

This is my principal ground of attack against the scheme of the Bill. Subject to this, I object to the clauses in the following particulars:—

Clause (1).—The duration of three years in sub-clause (*3*) should be from the date of the commencement of the Act. The clause as drafted means that the Bill will cease to operate in different areas on different dates which is unjustified.

Clause (*2*) (*1*) (*ii*).—"Such other officer, etc." should be omitted and "Additional Collector" substituted in its place.

Clause 3.—In my opinion sub-clause (*2*) should be omitted.

Clause 6.—The maximum fine of Rs. 100 is out of all proportion to the needs of the case. It ought not to exceed twice the amount of the license fee.

Clause 9.—The issue of a search warrant is a far too harassing process for the insignificant object in view. If this is at all retained the warrants ought to be issued by a competent Magistrate and not by an Excise Officer.

Clause 12.—The power to seize tobacco is uncalled for.

Clause 13.—The issue of warrant for arrest of a person believed to have committed an offence is unnecessary. It would be enough if the offences under this Act are treated as summons cases under the Criminal Procedure Code where warrant could issue only if the offender fails to appear on summons. In any event a warrant of arrest should not be issued by any other than a Magistrate having jurisdiction.

Clause 17.—The incorporation of sections of the Criminal Procedure Code which are designed for the investigation of cognisable offences seems to have been done without much thought. Section 164 (relating to recording of confessions) which is one of such sections would seem to be singularly *malapropos*. Sections 165 and 166 which authorise the Police Officer to make a search are also wholly inapplicable to offences under this Act and may be an instrument of harassment. Section 167 which provides for the remand of a person in custody beyond 24 hours cannot be made applicable to an offence in respect of a maximum sum of Rs. 6. Sections 168, 169 and 170 are similarly absurd in their application to the offences under this Act.

The simpler procedure on the lines of Section 132 of the Indian Railways Act ought to suffice in a case of this character. Sections 169 and 170 seem to be wholly supera-gotory in view of sub-clause (*4*) of clause 17.

Clause 18.—It is extraordinary that the bail should be required for attendance before an investigating officer. The Criminal Procedure Code requires the bail to be for attendance before a Magistrate when required. It should be the same here.

The investigation for these offences cannot possibly be elaborate as in a case of any cognisable offence. To authorise Excise officers to require supposed offenders to attend at a protracted investigation would give them powers of harassment which may be easily abused.

Clause 20.—The provision for taking cognizance on suspicion is novel. Suspicion may suffice for arrest or to start an investigation but not for starting a prosecution.

If cognisance on the Magistrate's own knowledge is retained section 191, Criminal Procedure Code, should apply.

Clause 21.—It is inconceivable why when a person refused or fails to give bail he should be forwarded to an investigating officer and not to a Magistrate.

Clause 25.—Twenty-four hours is too long a time for authorised detention in the case of such trivial offences. Twelve hours ought to be the limit.

Minute of dissent by Rai Sahib Panchanan Barma, M.L.C.

Clause 1 (3).—(*a*) A comma should be inserted after the words "three years only" and before the words "from the date" to make the meaning clear and to draw pointed attention to the intention that the period intended is three years and no longer.

(*b*) At the end of the sub-clause (*3*) after the words "in any area", the words "with respect to any kind of tobacco mentioned in the Schedule" should be added.

In the districts or in the parts of districts where tobacco is grown, any restriction to some kind of sale of leaves or stalks of tobacco grown, may do much harm to the cultivators of tobacco. The tobacco growers should be left free to grow their tobacco and sell their tobacco grown by them in any way they like. Any restriction to it will injuriously affect them. If the Act operates with respect to any kind of tobacco other than leaves and stalks locally grown, the cultivators of tobacco may go on doing their work unaffected by any outside interference from the excise officers.

It should be made clear that the Act operates only for 3 years from the date of its commencement in the province of Bengal as a whole. As the Bill is drafted, the duration of the Act in the province of Bengal remains indefinite. The operation of the Act in any particular area is restricted to 3 years only from the date of its coming into operation in that particular *area.* So by application of the Act on a different date to a different area its operation may be extended over 33 years which is not intended.

Clause 3 (1).—(*a*) The meaning of the words "within forty eight hours" should be made clear. Within the period of the whole of a year a particular person, may within a particular period of forty-eight hours, sell to a particular person that quantity of particular kind of tobacco which by the definition, may make him a "whole-sale dealer." Another person may make such sales repeatedly during the year. It should be made clear who is the person intended here.

(*b*) It should also be made clear whether a person may be "wholesale dealer" with respect to one kind of tobacco and "retail sale dealer" with respect to another kind of tobacco.

(*c*) It is to be determined also whether one license may cover sale of all kinds of tobacco.

(*d*) If a person is to take different licenses for selling different kinds of tobacco the burden of taxation on him will be very heavy, specially on small dealers.

Clause 4, first Proviso.—(*a*) Growers of tobacco "by labour paid in cash or in kind" are exempted by this proviso. But this proviso, as it stands, at present, cannot be taken to mean, that the *adhiars* or *bargadars* of tobacco who take a share of the produce for their labour in growing tobacco are exempted. The intention was to exempt the *adhiars* and *bargadars* who are certainly "growers of tobacco", though in another land; but in the interest of the owner of the land and of the *adhiar* or *bargadar* himself. The *adhiar* or *bargadar* is certainly the grower of tobacco of the first rank. The *adhiars* or *bargadars* of tobacco are partners in the business of tobacco. The owner of lands supplies the capital, *i.e.*, the land and the *adhiar* or *bargadar* supplies the labour and they share the produce, or profit. So a clear provision should be made describing or defining *adhiars* or *bargadars* of tobacco as *growers* of *tobacco.*

(*b*) The members of the tobacco grower's family are also tobacco growers. They should be clearly exempted.

(*c*) During the tobacco season, sometimes two or more tobacco-growers sell their respective tobacco, join the money obtained by the sale of tobacco as capital and purchase and sell tobacco for profit. This is partnership business or joint stock company business in embryonic stage. Such business in embryonic stage should be encouraged to develop. At this time of economic distress it will help the cultivators who are very hard hit to get some relief for such as purchasing some cloth, etc., with the profit so gained. By way of such relief being granted to them and by way of encouraging them

to develop their idea or capacity of doing partnership or joint-stock company business the cultivators doing such sort of business, as mentioned above, should be exempted, if anything more cannot be done, from taxation. This may well be done under the second proviso to clause 4.

The Bill makes no provision for the specific amount of fee to be imposed on dealers of tobacco in regard to a wholesale or retail license, and what kind of tobacco. This leaves my mind dubious as to the amount which is intended to be imposed on different kinds of tobacco licenses by the Government. In this dubious state of mind, I cannot form any judgment as to what I should advise.

Minute of dissent by Maulvi Tamizuddin Khan, M.L.C.

I am opposed to the principle of the Bill. In my opinion the present time is highly inopportune for a taxation measure like this.

Minute of dissent by Maulvi Abul Kasem, M.L.C.

I sign the report subject to the following minute of dissent:—

In my opinion the license fee for a retail dealer in rural areas should be Re. 1 a year, and that for the urban areas Rs. 4.

THE BENGAL TOBACCO (SALES LICENSING) BILL, 1935.

(Embodying amendments recommended by the Select Committee.)

[NOTE.—All matter omitted by the Select Committee has been printed in italics and enclosed in square brackets and all new matter inserted has been underlined.]

A

BILL

to provide for the imposition of a fee for license to sell tobacco in Bengal.

WHEREAS it is expedient to impose a fee for license to sell tobacco in Bengal;

AND WHEREAS the previous sanction of the Governor General has been obtained under sub-section (*3*) of section 80A of the Government of India Act to the passing of this Act; 5 & 6 Geo. V, c. 61; 6 & 7 Geo. V, c. 37; 9 & 10 Geo. V, c. 101.

It is hereby enacted as follows:—

Short title, extent, [*and*] commencement and duration.

1. (*1*) This Act may be called the Bengal Tobacco (Sales Licensing) Act, 1935.

(*2*) It extends to the whole of Bengal.

(*3*) It shall come into force in such areas on such dates as the Local Government may, by notification in the *Calcutta Gazette*, direct, and shall continue in force for three years only from the date on which it was first brought into force in any area.

Definitions.

2. In this Act, unless there is anything repugnant in the subject or context,— [*Cf.* Ben. Act V of 1909, s. 2(*5*).]

(*1*) "Collector" means—

(*i*) in the Calcutta District, as defined in clause (*4*) of section 2 of the Bengal Excise Act, 1909, the person appointed under clause (*b*) of sub-section (*2*) of section 7 of that Act to exercise all the powers and to perform all the duties of the Collector in that district, and Ben. Act V of 1909.

(*ii*) elsewhere, the chief officer in charge of the revenue administration of the district; and includes such other officer as the Local Government may appoint in this behalf;

(*2*) "Excise Commissioner" means the officer appointed under clause (*a*) of sub-section (*2*) of section 7 of the Bengal Excise Act, 1909; [*Cf.* Ben. Act V of 1909, s. 2(*8*).]

(*3*) "Excise Officer" means the Collector or any officer or other person appointed or invested with powers under section 7 of the Bengal Excise Act, 1909; [*Cf.* Ben. Act V of 1909, s. 2(*9*).]

(*4*) "prescribed" means prescribed by rules made under this Act;

(*5*) "sale," with its grammatical variations and cognate expressions, includes the supply of tobacco by clubs, societies or other similar institutions to their members or constituents on payment of any subscription, fee, price or other valuable consideration;

(*5a*) "Superintendent of Excise" includes an Inspector of Excise who is in charge of a district;

The Bengal Tobacco (Sales Licensing) Bill, 1935.

(*Clauses 3—8.*)

(*6*) " tobacco " means the leaves and stalks of the tobacco plant and includes any preparation or admixture thereof which is intended for the purpose of smoking or chewing or for use as snuff.

Wholesale and retail sale of tobacco.

3. (*1*) A person shall be deemed to sell tobacco wholesale when he sells to any one person, [*at any one transaction, or*] within [*the prescribed period of time*] forty-eight hours a quantity of any of the articles mentioned in the first column of the Schedule which is in excess of the quantity mentioned in the corresponding item in the second column of the said Schedule.

(*2*) The Local Government may, by notification in the *Calcutta Gazette*, alter, delete or add to all or any of the items in [*the second column of*] the schedule, and any such alteration, deletion or addition shall take effect as if it had been made by this Act ; [*Cf.* Act XIX of 1925, s. 8(*3*).]

(*3*) A person shall be deemed to sell tobacco retail when he sells tobacco otherwise than wholesale.

Prohibition of wholesale and retail sale of tobacco or exposing or keeping of tobacco for sale without license.

4. No person shall sell wholesale or retail, or for the purpose of sale, expose or keep, any tobacco except under a license granted under section 5 and in conformity with the conditions of such license :

Provided that a person who grows tobacco himself or with the aid of members of his family or by [*hired*] labour paid in cash or in kind may, without such a license, sell wholesale or retail, or, for the purpose of sale, expose or keep, any tobacco so grown [*by him*] :

Provided further that the Local Government or, subject to the prescribed conditions, the prescribed authority may [*subject to the prescribed conditions,*] exempt any person from taking out such a license.

License to sell, [*and to*] expose or keep for sale.

5. (*1*) The prescribed authority may, on the application of any person, and on payment of the prescribed fee, grant to such person a license for all or any of the purposes referred to in section 4.

(*2*) Every such license shall be in the prescribed form and contain the prescribed particulars and shall be granted for the prescribed period and subject to the prescribed conditions.

Penalty for sale without license. [*contravention of section 4.*]

6. (*1*) Whoever sells, or, for the purpose of sale, exposes or keeps, tobacco [*in contravention of section 4*] except under a license granted under section 5 shall be punished with fine which may extend to one hundred rupees.

(*2*) When any person is convicted under this section, the Court may direct that he shall pay, in addition to the fine imposed on him, the fee payable for the license which he should have obtained under this Act and such sum shall be recoverable as if it were a fine imposed on him under sub-section (*1*).

Penalty for breach of condition of license.

7. Whoever, being the holder of a license under this Act, commits a breach of any of the conditions subject to which the license was granted shall be punished with fine which may extend to one hundred rupees.

Power to compound offence.

8. (*1*) The Collector, or any Excise Officer not below the rank of Superintendent of Excise specially empowered by the Local Government in this behalf, may accept from any person who is reasonably suspected of having committed any offence punishable under this Act, payment of a sum of money not exceeding one hundred rupees by way of composition for such offence. [*and in all cases in which any tobacco has been seized as being liable to confiscation under this Act may release the same on payment of any sum not exceeding the value thereof as estimated by the Collector or such Excise Officer, as the case may be.*]

The Bengal Tobacco (Sales Licensing) Bill, 1935.

(Clauses 9—12.)

(*2*) If [*the*] payment by way of composition is accepted under sub-section (*1*), the accused person, if in custody, shall be discharged and no further proceedings shall be taken against him. [*If tobacco seized is released on payment under sub-section* (1), *it shall not be liable to confiscation for the offence on account of which it was seized.*]

Power to issue search-warrant.

9. If any Collector, or any Magistrate empowered under section 19 to try offences punishable under this Act, or the Excise Commissioner, or any Excise Officer not below the rank of Superintendent of Excise specially empowered by the Local Government in this behalf, upon information received, and after such inquiry (if any) as he thinks necessary, has reason to believe that any offence punishable under this Act has been or is likely to be committed, he may issue a warrant to search for and to seize any tobacco in respect of which such offence may have been, or is likely to be, committed together with any receptacle, package or covering in which such tobacco may be found and any document which throws or is likely to throw any light on the alleged offence. [*Cf.* Ben. Act V of 1909, s. 69.]

Information and aid to Excise Officer.

10. (*1*) Every police officer who is aware of any contravention of any provision of this Act shall be bound to give immediate information of such contravention to the prescribed Excise Officer in the prescribed manner. [*Cf.* Ben. Act V of 1909, s. 71.]

(*2*) Every police officer and every village *chaukidar* and *dafadar* shall, upon request made by any Excise Officer, be bound to give reasonable aid to such Excise Officer in giving effect to the provisions of this Act or of any rule, notification or order made, issued or given thereunder.

Powers of entry and inspection.

11. Any of the following officers, namely :—

(*a*) the Excise Commissioner, or

(*b*) the Collector, or

(*c*) any Excise Officer not below the [*prescribed*] rank of Sub-Inspector of Excise,

may, subject to the prescribed restrictions, enter at any time during which the same may be open any place in which any tobacco is exposed or kept for the purpose of sale by a person holding a license under this Act, and examine any accounts or registers maintained in such place.

Power to arrest without warrant and to seize articles. [*tobacco and to make searches*].

12. The Collector, or any Magistrate, or the Excise Commissioner, or any Excise Officer specially empowered by the Local Government in this behalf, may, subject to the prescribed restrictions, [*Cf.* Ben. Act V of 1909, s. 67.]

(*a*) arrest without warrant any person whom he has reason to believe to have committed any offence punishable under section 6 if such person refuses on demand to give his name and residence, or gives a name or residence which, in the opinion of the Collector, Magistrate, Excise Commissioner or Excise Officer, is false : and

[(*b*) *seize and detain any article which he has reason to believe to be liable to confiscation under this Act.*]

(*b*) seize and detain any article which might have been seized under warrant under section 9.

The Bengal Tobacco (Sales Licensing) Bill, 1935.

(Clauses 13—17.)

Power to issue warrant of arrest.

13. The Collector, or any Magistrate empowered under section 19 to try offences punishable under this Act, or the Excise Commissioner, or any Excise Officer not below the rank of Superintendent of Excise specially empowered by the Local Government in this behalf, may issue a warrant for the arrest of any person whom he has reason to believe to have committed any offence punishable under this Act. [*Cf.* Ben. Act V of 1909, s. 68.]

[*Things liable to confiscation*]

[**14.** *Subject to the provisions of sub-section (2) of section 8, any tobacco in respect of which any offence punishable under this Act has been committed, and any receptacle, package or covering in which such tobacco is found, shall be liable to confiscation.*] [*Cf.* Ben. Act V of 1909, s. 63.]

[*Confiscation by Magistrate or Collector.*]

[**15.** *(1) When, in any case tried by him, a Magistrate decides that any article is liable to confiscation under section 14, he may either order confiscation or give the owner of such tobacco an option to pay, in lieu of confiscation, such fine as the Magistrate thinks fit.* [*Cf.* Ben. Act V of 1909, s. 64.]

(2) Whenever any article is liable to confiscation under section 14, and the offender or the person entitled to possession is not known, or cannot be found, the Collector shall either himself inquire into the case or cause an inquiry to be made into it by a person authorized by him in this behalf. The case shall thereafter be determined by the Collector who may order confiscation :

Provided that no such order shall be made until the expiration of two months from the date of seizing the article intended to be confiscated, or without hearing any person who may claim any right thereto and the evidence (if any) which he produces, in support of his claim :

Provided further that, if the article in question is liable to speedy and natural decay, or or if the Collector is of opinion that its sale would be for the benefit of its owner, the Collector may, at any time, direct it to be sold and the provisions of this sub-section shall, as nearly as may be practicable, apply to the net proceeds of the sale.]

Power [*to*] of Collector and certain Excise Officers to investigate offences.

16. The Collector, or the Excise Commissioner, or any Excise Officer specially empowered by the Local Government in this behalf, may, without the order of a Magistrate, investigate any offence punishable under this Act which a Court having jurisdiction over the local area within the limits of the Collector's jurisdiction, or over the local area to which such Excise Officer is appointed, as the case may be, would have power to inquire into or try under the provisions of Chapter XV of the Code of Criminal Procedure, 1898, relating to the place of inquiry or trial. [*Cf.* Ben. Act V of 1909, s. 73.] V of 1898.

Powers and duties of Collector and certain Excise Officers investigating offences.

17. *(1)* The Collector, or the Excise Commissioner, or any Excise Officer empowered under section 16, may, after recording in writing his reason for suspecting the commission of an offence which he is empowered to investigate, exercise any of the powers conferred upon a police officer making an investigation, or upon an officer in charge of a police-station, by sections 160 to 171 of the Code of Criminal Procedure, 1898, and the said provisions of the said Code shall, subject to the prescribed restrictions or modifications, apply accordingly. [*Cf.* Ben. Act V of 1909, s. 74.]

(2) Subject to the prescribed restrictions, the Collector, or the Excise Commissioner, or any Excise Officer empowered under section 16, may, without reference to a Magistrate, and for reasons to be recorded by him in writing, stop further proceedings against any person concerned, or supposed to be concerned, in any offence which he or any Excise Officer subordinate to him has investigated.

The Bengal Tobacco (Sales Licensing) Bill, 1935.

(Clauses 18—21.)

(3) For the purposes of section 156 of the Code of Criminal Procedure, 1898, the area to which an Excise Officer empowered under section 16 is appointed shall be deemed to be a police-station, and such officer shall be deemed to be the officer in charge of such station. V of 1898.

(4) As soon as an investigation by the Collector, or the Excise Commissioner, or by an Excise Officer empowered under section 16, has been completed, if it appears that there is sufficient evidence to justify the forwarding of the accused to a magistrate, the investigating officer, unless he proceeds under sub-section (2), or under section 8, shall submit a report (which shall, for the purpose of section 190 of the Code of Criminal Procedure, 1898, be deemed to be a police report) to a Magistrate having jurisdiction to inquire into or try the case and empowered to take cognizance of offences on police reports.

Security and bail.

18. (1) Whenever any person arrested under this Act is prepared to furnish bail he shall be released on furnishing bail to the satisfaction of the officer releasing him, or, at the discretion of such officer, on his own bond. [*Cf.* Ben. Act V of 1909, s. 75(4) and (5).]

(1a) In the case of a person arrested otherwise than by, or on warrant of, a Magistrate, such bail or bond shall be for his appearance before the Collector or an Excise Officer empowered under section 16 to investigate the case.

(2) Any Excise Officer not below the prescribed rank may release persons on bail or on their own bond.

(3) The provisions of sections 498 to 502, 513, 514, 514A, 514B and 515 of the Code of Criminal Procedure, 1898, shall apply, so far as may be, in every case in which bail is accepted or a bond taken under this section.

Magistrates having jurisdiction to try offences.

19. No Magistrate other than— [*Cf.* Ben. Act V of 1909, s. 82.]

(a) a Presidency Magistrate, or

(b) a Magistrate whose powers are not less than those of a Magistrate of the second class, or

(c) a Magistrate of the third class specially empowered by the District Magistrate in this behalf,

shall try any offence punishable under this Act.

Initiation of proceedings.

20. No Magistrate shall take cognizance of an offence punishable under this Act except on his own knowledge or suspicion, or on the complaint or report of an Excise Officer or an officer empowered by the Local Government in this behalf. [*Cf.* Ben. Act V of 1909, s. 83.]

[*Production of articles seized and persons arrested.*]

[21. (1) *Articles seized under the warrant of the Collector, and, unless security for their appearance before the Collector be taken, persons arrested under such a warrant, shall be produced before the Collector.* [*Cf.* Ben Act V of 1909, s. 76.]

(2) *Articles seized, and persons arrested, under this Act by persons or officers not having authority to release arrested persons on bail or on their own bond shall be produced before or forwarded to—*

(a) *the Collector or an Excise Officer empowered under section 16 to investigate the case, or*

(b) *the nearest Excise Officer who has authority to release arrested persons on bail or on their own bond.*

(3) *When a person arrested is produced before an Excise Officer who has authority to release arrested persons on bail or on their own bond, such officer shall forward such person to, or take security for his appearance before, the Collector or an Excise Officer empowered under section 16 to investigate the case.*

The Bengal Tobacco (Sales Licensing) Bill, 1935.

(Clauses 21—22.)

(4) When any article seized cannot conveniently be conveyed before an officer referred to in sub-section (1) or sub-section (2), as the case may be, the person making the seizure shall place the said article in some place of safety and shall forthwith report the seizure to such an officer.]

Procedure after arrest.

21. Save in respect of warrants issued, or persons arrested, by Magistrates, persons arrested under this Act—

(*a*) under warrant, if arrested by—

(*i*) an officer having authority to release persons on bail or on their own bond, shall be so released or, if such persons are not prepared to furnish bail, shall be forwarded to the authority which issued the warrant ;

(*ii*) any other officer, shall be forwarded to the nearest Excise Officer having authority to release persons on bail or on their own bond, who shall deal with such persons in the manner provided in sub-clause (*i*) ;

(*b*) without warrant, if arrested by—

(*i*) an officer having authority to release persons on bail or on their own bond, shall be so released or, if such persons are not prepared to furnish bail, shall be forwarded to the Collector or an Excise Officer empowered under section 16 to investigate the case ;

(*ii*) any other officer, shall be forwarded to the nearest Excise Officer having authority to release persons on bail or on their own bond, who shall deal with such persons in the manner provided in sub-clause (*i*).

Procedure after seizure.

21A. Save in respect of warrants issued, or articles seized, by Magistrates, articles seized under this Act—

(*a*) under warrant, shall be forwarded to the authority which issued the warrant;

(*b*) without warrant, shall be forwarded to the Collector or an Excise Officer empowered under section 16 to investigate the case :

Provided that, if any such article cannot conveniently be forwarded to the person referred to in clause (*a*) or clause (*b*), as the case may be, the person making the seizure shall place the said article in some place of safety and shall forthwith report the seizure to such person.

Custody by Police of articles seized.

22. All officers in charge of police-stations shall take charge of and keep in safe custody, pending the orders of a Magistrate, or of the Collector, or of the Excise Commissioner, or of an Excise Officer empowered under section 16 to investigate the case, all articles seized under this Act which may be delivered to them ; and shall allow any Excise Officer who may accompany such articles to the police-station, or who may be deputed for the purpose by an official superior, to affix his seal to such articles.

[*Cf.* Ben. Act V of 1909, s. 77.]

The Bengal Tobacco (Sales Licensing) Bill, 1935.

(Clauses 23—28.)

Reports of arrests, seizures and searches.

23. When any Excise Officer below the rank of Collector makes, or receives information of, any arrest, seizure or search under this Act, he shall, within twenty-four hours thereafter, make a full report of all the particulars of the arrest, seizure or search, or of the information received, to the Collector, and to the Excise Officer (if any) empowered under section 16 to investigate the case within the local limits of whose jurisdiction the arrest, seizure or search was made. [*Cf.* Ben. Act V of 1909, s. 78.]

Execution of [*Collector's*] warrants.

24. [*Any warrant issued by the Collector may be executed by any officer selected by the Collector for the purpose* :] [*Cf.* Ben. Act V of 1909, s. 79.]

Any warrant issued under this Act, may be executed by any officer selected for the purpose by the authority issuing the warrant :

Provided that no such warrant issued [*by the Collector*] for execution in any area in which the administration of the Police is vested in the Commissioner of Police shall be executed by any police officer who is subordinate to the said Commissioner, unless it is endorsed by a police officer empowered by the Local Government in this behalf.

Maximum period of detention.

25. (*1*) No person arrested under this Act shall be detained in custody for a longer period than in all the circumstances of the case is reasonable ; and such period shall not exceed twenty-four hours, exclusive of the time necessary for the journey from the place of arrest to the place where a Collector or an Excise Officer empowered under section 16 to investigate the case may be, and thence to the Court of a Magistrate having jurisdiction to inquire into or try the case. [*Cf.* Ben. Act V of 1909, s. 80.]

(*2*) A Magistrate to whom an accused person is forwarded under section 167 of the Code of Criminal Procedure, 1898, by a Collector or an Excise Officer empowered under section 16 to investigate the case may exercise the powers conferred upon a Magistrate by the said section 167. V of 1898.

Application of certain provisions of the Code of Criminal Procedure, 1898.

26. (*1*) Save as otherwise expressly provided in this Act, the provisions of the Code of Criminal Procedure, 1898, relating to arrests, detentions in custody, searches, summonses, warrants of arrests, search-warrants and production of persons arrested shall apply, so far as may be, to arrests, detentions and searches made, summonses and warrants issued, and the production of persons arrested under this Act. [*Cf.* Ben. Act V of 1909, s. 81.]

(*2*) For the purposes of the said provisions of the said Code, both the Collector and any Excise Officer, not below the rank of Superintendent of Excise, specially empowered by the Local Government in this behalf shall be deemed to be a Court.

(*3*) [*Officers to whom a Collector's warrant is directed or endorsed, and officers (other than Collectors),*] All officers executing warrants or making arrests, detentions, searches or seizures under this Act shall, for the purposes of the said provisions of the said Code, be deemed to be police officers.

Indemnity.

27. No suit, prosecution or legal proceeding whatever shall lie against any person in respect of anything in good faith done or intended to be done under this Act.

Control, appeal and revision.

28. (*1*) The Collector shall, in all proceedings under this Act, be subject to the control of the Excise Commissioner, and shall, in such matters as the Local Government may direct, be subject also to the control of the Commissioner of the Division. [*Cf.* Ben. Act V of 1909, s. 8.]

The Bengal Tobacco (Sales Licensing) Bill, 1935.

(Clause 29, the Schedule.)

(*2*) Orders passed under this Act or under any rule made thereunder shall be appealable in prescribed cases to the prescribed authorities under the prescribed procedure.

(*3*) The Local Government may revise any order passed by the Collector, the Commissioner of the Division or the Excise Commissioner.

Power to make rules.

29. (*1*) The Local Government may, subject to the condition of previous publication, make rules for carrying out the purposes of this Act.

(*2*) In particular and without prejudice to the generality of the foregoing power, the Local Government may make rules prescribing—

[(*a*) *the period of time referred to in sub-section* (1) *of section 3 ;*]

(*b*) the authority by which, and the conditions subject to which, persons may be exempted from taking out a license ;

(*c*) the authority which may grant, and the fees payable in respect of, licenses ;

(*d*) the form of licenses, the particulars to be contained therein, and the conditions subject to which, and the period for which, licenses may be granted ;

(*e*) the Excise Officers to whom, and the manner in which, information shall be given under section 10 ;

(*f*) the rank of Excise Officers referred to in [*clause* (c) *of section 4 and*] sub-section (*2*) of section 18 ;

(*g*) the restrictions subject to which the powers conferred by sections 11 and 12 and sub-section (*2*) of section 17 shall be exercised ;

(*h*) the restrictions and modifications referred to in sub-section (*1*) of section 17 ;

(*i*) the cases in which and the authority to whom appeals shall lie under sub-section (*2*) of section 28 and the procedure for such appeals ; and

(*j*) the quantity of tobacco referred to in item (*n*) of the second column of the Schedule.

THE SCHEDULE.

[*See section 3*(*1*).]

[*1*]	[*2*]
(*a*) Tobacco leaves or stalks ..	.. Twenty seers.
(*b*) Ball tobacco ..	.. One maund.
(*c*) Cigarettes ..	.. One thousand.
(*d*) *Biris* ..	.. One thousand.
(*e*) Cigars or cheroots ..	.. Two hundred and fifty.
(*f*) Pipe tobacco ..	.. Six pounds.
(*g*) Cigarette tobacco ..	.. Six pounds.
(*h*) *Jarda* ..	.. One seer.
(*i*) *Dokta* ..	.. One seer.
(*j*) *Surti* ..	.. One seer.
(*k*) *Gul* ..	.. One seer.
(*l*) *Gundi* ..	.. One seer.
(*m*) Snuff ..	.. One seer.
(*n*) Any other kind of tobacco	.. The prescribed quantity.

J. W. McKAY,
Secy. to the Bengal Legis. Council.

BENGAL LEGISLATIVE COUNCIL DEPARTMENT.

NOTIFICATION.

No. 1385L.C.—13th March, 1935.—The following report of the Select Committee on the Bengal Amusements Tax (Amendment) Bill, 1935, with the Bill embodying amendments recommended by the Committee, is hereby published for general information.

Report of the Select Committee on the Bengal Amusements Tax (Amendment) Bill, 1935.

We, the members of the Select Committee of the Bengal Legislative Council to which the Bengal Amusements Tax (Amendment) Bill, 1935, was referred by a motion carried in the Bengal Legislative Council on the 14th February, 1935, have the honour to submit this our report with the Bill embodying an amendment recommended by us annexed. The matter inserted by the Select Committee has been underlined.

2. The Bill was published in English in the *Calcutta Gazette Extraordinary* of the 28th January, 1935.

3. The Committee met for the first time on the 19th February, 1935, and concluded its sittings on the 26th February, 1935.

On the 20th February, 1935, the Committee received a deputation consisting of certain members representing the producers, distributors and Exhibitors of the Cinema Industry, who were headed by Mr. B. N. Sarkar, and gave them a hearing as to the effect of the new tax on the Indian Cinema Industry. Their main grievances are set out in a memorial addressed to His Excellency the Governor of Bengal, dated the 8th February, 1935, printed as Paper No. 2 to the Bill.

4. We do not consider that the Bill has been so altered as to require republication.

Clause 1.—The Committee decided that the taxes imposed by the Bill should be in force for a period of three years only and sub-clause (*3*) has been added accordingly.

We recommend that the Bill as reported on by us be passed

J. A. WOODHEAD,
Member-in-charge.

D. GLADDING.

S. M. BOSE.

J. C. SEN.

A. G. CHOWDHURY.

HARIDHAN DUTT.

*K. C. RAY CHOWDHURY.

*P. BANERJI.

H. S. SUHRAWARDY.

W. L. ARMSTRONG.

A. DEC. WILLIAMS.

LALIT KUMAR BAL.

BHUPENDRA NARAYAN SINHA.

MD. SAADATULLAH.

J. W. McKAY,
Secretary to the Bengal Legislative Council.

*Signed subject to his minute of dissent annexed.

NOTE.—The signature of Babu Haribansa Roy had not been received up to the time of printing the Report.

Minute of dissent by Mr. K. C. Ray Chowdhury, M.L.C.

I do not object to the principle of taxing low-priced tickets of admission to the cinemas, but favour the idea of reducing the tax from half-an-anna to quarter-of-an-anna on tickets of admission the cost of which exceeds three annas but does not exceed four annas. This idea is based on the simplest of economic maxims of taxation, namely, capacity to pay. Among those who patronise cinemas as recreation are a large body of working class people. They cannot afford more than three or four annas for admission out of their fixed wages, which are in these days of depression, at its minimum. It is generally admitted that cinemas provide healthy counter-attraction to those workmen who otherwise spend their leisure on drink and dissipation and gambling. This applies remarkably to jute-mill hands who are working only four days a week. I am told that there is appreciable falling-off in sale of intoxicants in Howrah, since the opening of cinemas there. The habit of drinking country liquor and toddy among working class people is also falling in Kosba, Dhakuria and adjoining villages after the opening in January last of the "Aleya" Cinema, near Ballygunj station. From the point of view of new industrial development, several indigenous companies have cropped up for production of cheap Indian films which attract the working classes, specially if the plot is a religious or mythological one. They are already handicapped by heavy duty of raw films. The reduction of one pice on the lowest priced tickets of three and four annas will, according to estimates supplied to the Committee, cause a small shrinkage in revenue of about Rs. 12,500 from 2 lakhs, the estimated yield of the proposed tax, but it is a good deal of money payable by the poorest class of cinema-goers. Rs. 12,500 represents an annual sale of 800,000 three and four-anna tickets. I fear even a pice tax, instead of two pice as proposed in the Bill, will even adversely affect sale of these tickets and will naturally jeopardise the position and prospects of this young film industry which employs a large number of educated young men and female artists.

Minute of dissent by Mr. P. Banerji, M.L.C.

I cannot but utter a strong protest against the imposition of duty on the four-anna ticket in the cinemas, etc. It is regrettable that this will actually fall on the poorest of the poor to whom even four annas is a very big amount to spare for a harmless recreation. If this duty, like the excise on wines, is meant to decrease the sale of commodity, *i.e.*, decrease the people going to cinemas, I would welcome it, if it is proved that the cinemas are dangerous for society, but as it has been accepted that it is the most harmless of the recreation of the poor, I cannot find any justification for this duty.

The disadvantage of any small increase in taxation must be counterbalanced by the advantage to the community of a further small increase in public expenditure in every direction, but I find that this direct taxation is a very harmful and dangerous precedent in taxing the poor. An individual must adjust his expenditure to income and naturally shall be forced either to decrease his visits to the cinemas or shall try to increase his income. The labourer as is well known cannot increase his wages and thus is in an unhappy position, as like the Public Authority, he cannot adjust income to expenditure. The reason that a higher priced seat is bearing the taxation is no ground that the poor can also bear it. For instance an individual having a monthly income of Rs. 500 or more does not spend more than 12 per cent. even if he takes a two-rupee ticket daily, but a poorly paid wage-earner whose income is hardly eight annas a day has to spend about 15 per cent. if he chooses to spend only once a week in this harmless pastime. In fact, it is a very high tax on people with slender resources. I want to utter a note of warning that the result of this taxation will be very dangerous for cinemas, specially to Bengali and Indian-owned cinemas, as the four-anna and eight-anna seats bring a stable revenue to them. The Bengali film-producer will be most hard hit because his films can be shown only in Bengal, unlike the English and Urdu and Hindi films which are exhibited all over India. The film and the cinema industry is the only industry in which the proverbial shy capital of the Bengalee has speculated against all odds, and if this also turns out to be a losing venture, it will spell disaster for Bengalee capital.

I would welcome if the Government stop the issue of complimentary tickets in cinemas except under very special circumstances, for which records must be kept by cinemas, as the issue of complimentary tickets decreases the sale of higher priced tickets and thus the Government loses the duty to a considerable extent. The holder of a complimentary ticket must pay 25 per cent. of the face value of the seat for which the pass is issued as amusement tax.

The profiteering by middlemen on sale of any cinema tickets as distinct from the cinema proprietors or their recognised agents must be stopped.

In Bombay even, there is no amusement tax on four-anna tickets, in spite of the fact that in Bombay the labour gets higher scale of wages than in Bengal, and in Madras four-anna tickets are exempted from amusement duty.

THE BENGAL AMUSEMENTS TAX (AMENDMENT) BILL, 1935;

(embodying an amendment recommended by the Select Committee).

[NOTE.—The matter inserted by the Select Committee has been underlined.]

A

BILL

to amend the Bengal Amusements Tax Act, 1922.

WHEREAS it is expedient to amend the Bengal Amusements Tax Act, 1922, in the manner hereinafter appearing; Ben. Act V of 1922.

It is hereby enacted as follows:—

Short title, [*and*] commencement, and duration.

1. (*1*) This Act may be called the Bengal Amusements Tax (Amendment) Act, 1935.

(*2*) It shall come into force on such date as the Local Government may, by notification in the *Calcutta Gazette*, appoint.

(*3*) Clauses (*2*) and (*3*) of section 2 shall remain in force for three years only and thereafter the Bengal Amusements Tax Act, 1922, shall have force as if it had not been amended by the said clauses.

Amendment of section 3 of Bengal Act V of 1922.

2. In section 3 of the Bengal Amusements Tax Act, 1922—

(*1*) in sub-section (*1*) the words and figures "as from the first day of April, 1922" shall be omitted;

(*2*) in sub-section (*2*) for the words "eight annas" the words "three annas" shall be substituted;

(*3*) in sub-section (*3*) for item (*i*) the following items shall be substituted, namely:—

"(*i*) is more than three annas but is not more than four annas.....half an anna,

(*ia*) is more than four annas but is less than twelve annas.....one anna"; and

(*4*) sub-section (*5*) shall be omitted.

J. W. MCKAY,
Secy. to the Bengal Legis. Council.

Registered No. C207

The Calcutta Gazette

THURSDAY, MARCH 21, 1935.

PART VI

Bills introduced in the Council of State and Legislative Assembly, Reports of Select Committees presented to the Council and Assembly, and Bills published under Rule 18 of the Indian Legislative Rules

GOVERNMENT OF INDIA.

Legislative Department.

The following Bill was introduced in the Council of State on the 11th February, 1935 :—

C. OF S. BILL No. 1 OF 1935.

A Bill further to amend the Cinematograph Act, 1918, for a certain purpose.

WHEREAS it is expedient further to amend the Cinematograph Act, 1918, for the purpose hereinafter appearing ; II of 1918.
It is hereby enacted as follows :—

Short title.

1. This Act may be called the Cinematograph (Amendment) Act, 1935.

Amendment of section 5, Act II of 1918.

2. In section 5 of the Cinematograph Act, 1918 (hereinafter referred to as the said Act), sub-section (*3*) shall be re-numbered as sub-section (*4*) and the following sub-section shall be inserted as sub-section (*3*), namely :— II of 1918.

" (*3*) A further condition shall be inserted in every licence that the licensee will not exhibit or permit to be exhibited in public any advertising matter consisting of or containing any pictorial representation which has not been certified as suitable for publication by an authority constituted under section 7 or distribute or publish, or cause to be distributed or published, any such matter ".

Amendment of section 6, Act II of 1918.

3. In section 6 of the said Act,—

(*a*) sub-section (*2*) shall be re-numbered as sub-section (*3*) and, in that sub-section as so re-numbered, after the word " film " in both places where it occurs, the words " or advertising matter " shall be inserted ; and

(*b*) the following sub-section shall be inserted as sub-section (*2*), namely :—

"(*2*) If the owner or person in charge of a cinematograph or the producer or importer of a film, exhibits or permits to be exhibited in public any advertising matter consisting of or containing any pictorial representation which has not been certified as suitable for publication by an authority constituted under section 7, or distributes or publishes or causes to be distributed or published any such matter, he shall be punishable with fine which may extend to five hundred rupees and in the case of a continuing offence with a further fine which may extend to fifty rupees for each day during which the offence continues, and if the offender is the owner or person in charge of a cinematograph his licence (if any) shall be liable to be revoked by the licensing authority ".

Amendment of section 7, Act II of 1918.

4. In section 7 of the said Act,—

(*a*) In sub-section (*1*), for the words "and certifying films as suitable for public exhibition, and" the following words shall be substituted, namely :—

"films and pictorial representations intended for use as advertising matter, and of certifying films as suitable for public exhibition and pictorial representations as suitable for publication, and may ";

(*b*) in sub-section (*2*),—

(*i*) after the word "exhibition" the words "or that a pictorial representation is suitable for publication" shall be inserted ; and

(*ii*) after the word "film", where it occurs for the second time, the words "or pictorial representation, as the case may be," shall be inserted ;

(*c*) in sub-section (*3*),—

(*i*) in clause (*a*), after the word "exhibition" the words "or that a pictorial representation is not suitable for publication" shall be inserted ; and

(*ii*) in clause (*b*), after the word "film" where it occurs for the first time, the words "or pictorial representation, as the case may be," shall be inserted, and after the word "film", where it occurs for the second and third times, the words "or pictorial representation" shall be inserted ;

(*d*) in sub-section (*4*), after the word "exhibited" the words "or the production before itself of any certified pictorial representation which it has reason to believe is about to be used as advertising matter" shall be inserted and after the word "film", where it occurs for the second, third and fourth times, the words "or pictorial representation" shall be inserted ;

(*e*) in sub-section (*5*), after the word "film" in each place where it occurs, the words "or pictorial representation" shall be inserted ;

(*f*) in sub-section (*6*), after the word "film", in both places where it occurs, the words "or pictorial representation" shall be inserted ;

(*g*) in sub-section (*7*), after the word "film", in both places where it occurs, the words "or pictorial representation" shall be inserted ; and

(*h*) in sub-section (*8*), after the word "film" the words "or the use as advertising matter of a pictorial representation" shall be inserted, and after the words, brackets and figure "in sub-section (*2*)" the words, brackets and figure "or sub-section (*3*), as the case may be," shall be inserted.

Amendment of section 8, Act II of 1918.

5. In clause (*b*) of sub-section (*2*) of section 8 of the said Act, for the words "constituted for examining and certifying films as suitable for public exhibition" the words and figure "constituted under section 7" shall be substituted.

STATEMENT OF OBJECTS AND REASONS.

Under the provisions of the Cinematograph Act, 1918, all films intended for public exhibition in British India are subject to censorship. The censorship is however confined to the film itself and does not extend to the advertising matter, used in connection with the exhibition of the film, which is often more objectionable than the film advertised. In paragraph 249 of their Report; the Indian Cinematograph Committee recommended that action should be taken to bring posters used in connection with the exhibition of cinematograph films under control. The desirability of taking action in this matter has become more evident with the lapse of time and an examination of the question in consultation with Local Governments has made it clear that steps should be taken to amend the Cinematograph Act so as to provide for the censorship of all pictorial representations intended for use as advertising matter in connection with cinematograph films. The Bill is intended to provide for the amendment of the Act accordingly.

NEW DELHI ; M. G. HALLETT.

The 16th January, 1935.

L. GRAHAM,

Secy. to the Govt. of India.

Registered No. C207

No. 12 of 1935

The Calcutta Gazette

THURSDAY, MARCH 21, 1935.

CONTENTS:

	PAGE.		PAGE.
Statement under the Cotton Ginning and Pressing Factories Act, 1925 ..	385	Weather and Crop Report for the week ending 13th March 1935	387—390
Statements of weekly gauge readings on the river Ganges at Rampur Boalia ..	386	Price-list (retail) of Staple Food-Crops in the local areas of Bengal from October to December 1934	391—394

SUPPLEMENT.

Official Papers.

FORM C—BENGAL.

STATEMENT OF COTTON PRESSED IN THE BENGAL PRESIDENCY FOR THE WEEK ENDING THE 8th MARCH 1935.

[Section 5(2) of the Cotton Ginning and Pressing Factories Act, 1925.]

Name of Division or block.	Number of bales pressed.				District included in the block.
	During the week.	During the corresponding week last year.	Since 1st September 1934 (the date prescribed by the Local Government as the commencement of the season).	During the corresponding period last year.	
The Bengal Presidency	1,627 or 1,600·32 bales of 400 lbs.	2,128	10,731	13,212	All districts in the Presidency.

J. B. McBRIDE,

Chief Inspector of Factories, Bengal.

Statement of weekly gauge readings on the river Ganges at Rampur Boalia for the week ending the 9th March 1935.

Date.	Hour.	Height of surface above P. W. D. datum.	Height of surface above P. W. D. datum on the same date last year.	Remarks.
1935.				
3rd March	7 a.m.	37·85	36·83	Zero of gauge referred to B. M. on Rajshahi College step ; value 64·73.
4th „	7 „	37·85	36·83	
5th „	7 „	37·85	36·73	
6th „	7 „	37·85	36·68	Value of zero of the gauge =34·55 P. W. D.
7th „	7 „	37·80	36·58	
8th „	7 „	37·80	36·53	
9th „	7 „	37·65	36·43	

Highest recorded level on 26-8-1879=64·24.
Lowest recorded level on 24-4-1931=32·05.

[ILLEGIBLE], for *Subdivisional Officer,*
Irrigation Department, Rajshahi.

Rampur Boalia, the 10th March 1935.

DISTRICT REPORTS ON WEATHER AND CROPS.

For the week ending on the 13th March 1935.

Summary.— Excepting light showers in places the week was rainless. More rain is needed for the preparation of lands for and sowing of autumn crops. Harvesting of spring crops is progressing favourably. Prospects of standing crops are generally satisfactory. During the week ending Saturday, the 9th March 1935, 2,580 persons attended different relief centres and 777 persons received gratuitous relief in the distressed areas of Murshidabad. In Birbhum and Bankura, 9,371 and 1,182 persons respectively, were employed on test relief works on Saturday, the 9th March 1935. The average price of common rice for the province has remained practically stationary as compared with that of the previous week.

Serial No.	District and sub-division.	Rainfall.	Price of common rice, in seers, per rupee.		Character of the weather, condition of crops, etc.
			This week.	Previous week.	
1	2	3	4	5	6
		Inches.			
1	24-Parganas ..	Nil	10½	10 15/16	Weather seasonable. No damage to crops is reported. Fodder and water are sufficient. Export and import normal.
	Diamond Harbour	0·13	13½	14	
	Barrackpore ..	Nil	10	10	
	Baraset ..	Nil	10	10	
	Basirhat ..	Nil	12 1/16	12 1/16	
2	Nadia ..	Nil	10	10	Weather seasonable. Import and export of rice normal. Harvesting of *rabi* crops continues. Prospects of standing crops are fair. Fodder and water are sufficient.
	Kushtia ..	Nil	13	(*n*)	
	Meherpur ..	Nil	10½	10½	
	Chuadanga ..	Nil	12	12	
	Ranaghat ..	Nil	9½	9½	
3	Murshidabad ..	Nil	10½	10	Weather seasonable. Prospects of standing crops are not favourable in Kandi subdivision. Fodder is insufficient in some places in Sadar subdivision. Stock of rice and water are sufficient. No large export or import. Cattle-disease is reported from Kandi and Jangipur subdivisions. Test relief works continue. 2,409 men, 83 women and 83 children attended relief centres during the week ending Saturday, the 9th March 1935. Number of persons receiving gratuitous relief in the distressed areas was 188, 360 and 229 in Lalbagh, Kandi and Jangipur subdivisions, respectively.
	Lalbagh ..	Nil	10½	12	
	Jangipur ..	Nil	11½	11½	
	Kandi ..	Nil	11½	11½	
4	Jessore ..	Nil	11	11	Weather seasonable. Prospects of standing crops are fair. No large export or import. Fodder and water are sufficient.
	Jhenidah ..	Nil	13	13	
	Magura ..	Nil	12	12	
	Narail ..	Nil	13	13	
	Bongaon ..	Nil	10	10	
5	Khulna ..	Nil	12	11	Weather seasonable and its effects on crops are good. Fodder and water are sufficient.
	Satkhira ..	0·15	12½	12½	
	Bagerhat ..	Nil	12½	12½	

(*n*) Not reported.

Serial No.	District and sub-division.	Rainfall.	Price of common rice, in seers, per rupee.		Character of the weather, condition of crops, etc.
			This week.	Previous week.	
1	2	3	4	5	6
		Inches.			
6	Burdwan ..	0·28	11	11	Weather seasonable. Condition of crops is not satisfactory. Fodder and water are sufficient.
	Asansol ..	0·30	10	10	
	Katwa ..	0·30	11	11½	
	Kalna ..	0·86	10	10	
7	Birbhum ..	Nil	12	12	Weather seasonable. Prospects of standing crops are fair. Fodder and water are sufficient. 9,371 men were employed on test relief works on Saturday, the 9th March 1935.
	Rampurhat ..	Nil	11	11	
8	Bankura ..	0·08	11	11	Weather seasonable. Fodder and water are sufficient. Ploughing of seed beds is in progress. No large export or import. Prospects of standing crops are fair. Cattle disease is reported from Vishnupur and Borjora police-stations. 1,182 persons were employed on Saturday, the 9th March 1935, on test relief works opened by the district board, at Dhaobundh and Chamtiabad bundh.
	Vishnupur ..	0·34	11	11	
9	Midnapore ..	Nil	13	13	Weather seasonable. Cultivation of crops is in progress. Fodder and water are sufficient.
	Contai ..	0·13	15	14	
	Tamluk ..	0·80	11	11½	
	Ghatal ..	0·05	12½	12½	
	Jhargram ..	0·63	12½	12½	
10	Hooghly ..	Nil	10	10	Weather seasonable. Fodder and water are sufficient.
	Serampore ..	Nil	10	10	
	Arambagh ..	0·10	11½	11½	
11	Howrah ..	Nil	10	10	Weather seasonable. Its effects are favourable. Fodder and water are sufficient.
	Uluberia ..	Nil	11½	11½	
12	Rajshahi (Rampur Boalia).	Nil	11½	11½	Weather seasonable. Prospects of standing crops are fair. Fodder and water are sufficient.
	Naogaon ..	Nil	13	(n)	
	Nator ..	Nil	11½	11½	
13	Dinajpur ..	Nil	12½	12½	Weather seasonable. Fodder and water are sufficient. Cattle-disease is reported from Balurghat thana.
	Thakurgaon ..	Nil	13	13	
	Balurghat ..	Nil	13 4/16	13 4/16	
14	Jalpaiguri ..	Nil	13	13	Weather seasonable. Fodder and water are sufficient.
	Alipur ..	Nil	13	13	

(n) Not reported.

Serial No.	District and subdivision.	Rainfall.	Price of common rice, in seers, per rupee.		Character of the weather, condition of crops, etc.
			This week.	Previous week.	
1	2	3	4	5	6
		Inches.			
15	Darjeeling ..	Nil	8	8	Weather favourable. Fodder and water are sufficient. Cattle-disease exists at places.
	Kurseong ..	Nil	9	10	
	Siliguri ..	Nil	13½	13½	
	Kalimpong ..	Nil	8	8	
16	Rangpur ..	Nil	12	12	Weather seasonable. Prospects of standing crops are fair. No large export or import. Fodder and water are sufficient. Cattle-disease is reported from Chilmari and Phulbari police-stations.
	Nilphamari ..	Nil	12	13	
	Kurigram ..	Nil	12½	13	
	Gaibandha ..	Nil	12	12	
17	Bogra ..	Nil	14	14	Weather seasonable. Condition of *rabi* crops is favourable. Jute and *aus* crops are being sown. Fodder and water are sufficient.
18	Pabna ..	Nil	11	11	Weather fair. Condition of standing crops is fair. Fodder and water are sufficient.
	Serajganj ..	Nil	11	11	
19	Malda ..	Nil	13½	13½	Weather seasonable. Prospects of standing crops are fair. Fodder and water are available.
20	Cooch-Behar ..	Nil	15 4/11	13 4/11	Weather seasonable. Preparation of lands for jute and autumn paddy and cutting of tobacco leaves continue Prospects and condition of standing crops are fair Fodder and water are sufficient. Cattle-disease is reported from Dinhata subdivision.
21	Dacca ..	Nil	12	12	Rainfall at North Sadar (Kapasia) nil. Weather seasonable. No large export or import. Prospects of crops are good. Fodder and water are available. Cattle-disease has again broken out in parts of Manikganj subdivision.
	Manikganj ..	Nil	11	11	
	Narayanganj ..	0·04	11½	11½	
	Munshiganj ..	Nil	11½	11½	

Serial No.	District and subdivision.	Rainfall.	Price of common rice, in seers, per rupee.		Character of the weather, condition of crops, etc.
			This week.	Previous week.	
1	2	3	4	5	6
		Inches.			
22	Mymensingh ..	Nil	10½	10½	Weather seasonable. Condition of crops is satisfactory. Fodder and water are available.
	Jamalpur ..	Nil	13½	12½	
	Tangail ..	0·41	11	11	
	Netrakona ..	Nil	12½	12	
	Kishorganj ..	Nil	11½	11½	
23	Faridpur ..	Nil	12	12½	Weather seasonable. Condition of standing crops is fair. Fodder and water are sufficient. Cattle-disease exists in places of Madaripur subdivision.
	Goalundo (Rajbari).	0·11	10	10	
	Madaripur ..	0·32	13	13	
	Gopalganj (a) ..	1·38	13	13	
24	Bakarganj (Barisal).	Nil	13	13	Weather seasonable. Prospects of standing crops are good. Fodder and water are sufficient.
	Pirojpur ..	Nil	11½	11½	
	Patuakhali ..	1·80	11	11	
	Dakshin Shabazpur (Bhola).	Nil	12	12	
25	Chittagong ..	Nil	12 13*	12 13*	Weather seasonable. Condition of standing *rabi* crop is fair. Fodder and water are sufficient. Panga salt sells at 13 seers per rupee at Sadar and 12 seers per rupee at Cox's Bazar.
	Cox's Bazar ..	Nil	13	13	
26	Tippera (Comilla)	Nil	13	13	Prospects of crops are fair. Cattle-disease exits in Chandpur subdivision.
	Brahmanbaria ..	Nil	11	11	
	Chandpur ..	Nil	13 1/16	13 1/16	
27	Noakhali ..	Nil	13	13	Weather seasonable. Condition of standing crops is fair.
	Feni ..	Nil	13½	13½	
28	Chittagong Hill Tracts.	Nil	14	15	Weather seasonable.
29	Tripura State ..	Nil	12½	12½	Weather seasonable. Cattle-disease exists in Sabroom Division. Fodder and water are sufficient. Cotton sells at Rs. 8 to Rs. 15 and jute at Rs. 2-8 to Rs. 4-4 per maund.

(a) The rainfall at Haridaspur, which is very near to Gopalganj, is shown here.

* Burma rice.

S. ABDULLAH, for *Director of Agriculture, Bengal.*

Dacca, the 16th March 1935.

BOARD OF REVENUE, BENGAL.

NOTIFICATION—No. 4302 Misc.

Calcutta, the 12th March 1935.

The price-lists of staple food-crops in the local areas of Bengal, prepared under section 39 of the Bengal Tenancy Act, 1885 (VIII of 1885), for the period from 1st October to 31st December 1934 having been approved by the Board of Revenue, Bengal, are published for general information.

By order of the Board of Revenue, Bengal,

M. O. CARTER, *Secretary.*

Price-list (retail) of Staple Food-Crops in the local areas of Bengal, prepared under section 39 of the Bengal Tenancy Act (VIII of 1885), for three months from October to December 1934.

BURDWAN DIVISION.

Local areas.	Marts at which prices were taken.	Staple food-crop or crops.	Market days for the preparation of price-lists.	Quantities per rupee in seers of 80 tolas, Company's weight.			Average price for the quarter ending the 31st December 1934.
				October.	November.	December.	
BURDWAN.				S. c.	S. c.	S. c.	S. c.
Subdivision—							
Sadar ..	Burdwan Nutunganj.	Rice ..	Last day of every month ..	10 0	9 6	10 0	9 13
Asansol ..	Raniganj ..	Do. ..	27th of every month ..	10 0	10 0	10 4	10 1
Katwa ..	Katwa ..	Do. ..	Ditto	10 0	10 0	11 8	10 8
Kalna ..	Kalna ..	Do. ..	28th of every month ..	10 0	9 6	0 6	9 9
BIRBHUM.							
Sadar ..	Suri ..	Do. ..	Last day of every month ..	12 0	10 0	12 0	11 5
Rampur Hât	Rampur Hât	Do. ..	Last Monday or Friday of every month.	10 0	10 0	10 8	10 3
BANKURA.							
Sadar ..	Bankura ..	Do. ..	Last day of every month ..	10 0	10 8	12 0	10 13
Vishnupur ..	Vishnupur ..	Do. .	Ditto	11 8	10 0	10 0	10 8
MIDNAPORE.							
Sadar ..	Colonelgola and School Bazar, town Midnapore.	Do. ..	Ditto	11 8	11 8	12 8	11 13
Jhargram ..	Jhargram ..	Do. ..	First Sunday of each month ..	12 11	12 0	13 0	12 9
Ghatal ..	Ghatal Municipal Market.	Do. ..	27th of every month ..	12 6	11 6	12 8	12 1
Tamluk ..	Tamluk Bazar	Do. ..	Ditto	9 0	9 0	9 8	9 3
Contai ..	Kantanala Bazar, town Contai.	Do. ..	Last market day, *i.e.*, last Sunday or Thursday, whichever is nearer to the last day of every month.	12 8	13 0	13 0	12 13
HOOGHLY.							
Sadar ..	Hooghly ..	Do. ..	Last Thursday of every month	12 8	12 6	12 12	12 7
Serampore ..	Serampore ..	Do. ..	First or last Saturday of every month.	11 0	12 0	13 0	12 0
Arambagh ..	Arambagh ..	Do. ..	Ditto	12 0	11 8	12 8	12 0
HOWRAH.							
Sadar ..	Ramkristopur	Do. ..	Last day of every month ..	11 0	11 0	11 0	11 0
Uluberia ..	Uluberia ..	Do. ..	Last Saturday of every month	10 0	11 0	11 0	10 11

PRESIDENCY DIVISION.

24-PARGANAS.				S. c.	S. c.	S. c.	S. c.
Subdivision—							
Sadar ..	Chetla Hât ..	Rice ..	Last Wednesday of every month	13 5	11 7	11 13	12 3
Barasat and Barrackpore.	Barasat ..	Do. ..	Last market day which immediately precedes the last Saturday of every month.	10 0	10 0	10 0	10 0
Diamond Harbour.	Magrahât ..	Do. ..	Ditto	11 8	11 0	13 5	11 15
Basirhat ..	Baduria ..	Do. ..	Second Tuesday of every month	10 14	12 12	15 4	12 15

PRESIDENCY DIVISION—*concluded.*

Local areas.	Marts at which prices were taken.	Staple food-crop or crops.	Market days for the preparation of price-lists.	Quantities per rupee in seers of 80 tolas, Company's weight.			Average price for the quarter ending the 31st December 1934.
				October.	November.	December.	
NADIA.				S. c.	S. c.	S. c.	S. c.
Subdivision—							
Sadar ..	Goari ..	Rice ..	Last day of every month ..	8 14	10 0	8 14	9 4
Ranaghat ..	Ranaghat ..	Do. ..	28th of every month ..	10 0	9 0	10 0	9 11
Meherpur ..	Meherpur Kalibazar.	Do. ..	Last Monday of every month	11 0	11 0	11 0	11 0
Chuadanga ..	Chuadanga ..	Do. ..	Saturday immediately preceding the 28th of every month.	11 7	11 7	11 7	11 7
Kushtia ..	Bahadurkhali	Do. ..	28th of every month ..	11 8	10 8	11 8	11 3
MURSHIDABAD.							
Sadar ..	Berhampore Khagra.	Do. ..	Ditto	9 8	10 0	11 8	10 5
Lalbagh ..	Jiaganj ..	Do. ..	First Monday of every month..	11 0	10 8	11 0	10 13
Kandi ..	Kandi ..	Do. ..	The last market day before the 28th of every month.	10 8	11 0	11 4	10 15
Jangipur ..	Raghunathganj	Do. ..	Ditto	10 8	11 0	11 8	11 0
JESSORE.							
Sadar ..	Jessore ..	Do. ..	Monday or Friday falling on or next before the last day of every month.	12 0	12 0	13 0	12 5
Narail ..	Rupganj ..	Do. ..	Sunday or Thursday falling on or next before the 28th of every month, except February, in which the Monday or Friday falling on or next before the 26th.	12 0	12 8	12 8	12 5
Magura ..	Magura ..	Do. ..	Thursday or Sunday falling on or next before the 28th of every month, except February, in which the Thursday falling on or next before the 26th.	12 0	13 0	13 0	12 11
Jhenida ..	Jhenida ..	Do. ..	Ditto	14 0	13 0	13 0	13 5
Bongaon ..	Bongaon ..	Do. ..	Monday or Friday falling on or next before the 28th of every month, except February, in which the Monday or Friday falling on or next before the 26th.	9 0	8 8	10 0	9 3
KHULNA.							
Sadar ..	Khulna Bazar (*alias* Saheberhât).	Do. ..	Last market day of every month	10 8	11 8	13 0	11 11
Satkhira ..	Satkhira Bazar (*alias* Pranshire).	Do. ..	28th of every month, except February, when the price will be taken on the 26th.	11 4	11 4	15 5	12 10
Bagerhat ..	Bagerhat ..	Do. ..	Sunday falling on or before the 28th of every month, except February, when the price will be taken on the Sunday falling on or before the 26th.	9 8	9 8	12 8	10 8

DACCA DIVISION.

DACCA.				S. c.	S. c.	S. c.	S. c.
Subdivision—							
Narayanganj	Narayanganj Bazar.	Rice ..	Last market day before the 13th of every month.	10 0	10 8	10 8	10 5
Sadar ..	Dacca Town Imamganj Bazar.	Do. ..	Last market day of every month	9 0	9 8	10 0	9 8
Manikganj ..	Dasora Bazar	Do. ..	Market day falling on or immediately before the 28th of every month.	10 0	10 8	11 8	10 11
Munshiganj ..	Mirkadim ..	Do. ..	Last Sunday of every month	10 8	11 0	11 8	11 0

DACCA DIVISION—*concluded.*

Local areas.	Marts at which prices were taken.	Staple food-crop or crops.	Market days for the preparation of price-lists.	Quantities per rupee in seers of 80 tolas, Company's weight.			Average price for the quarter ending the 31st December 1934.
				October.	November.	December.	
MYMENSINGH.				S. c.	S. c.	S. c.	S. c.
Subdivision—							
Jamalpur ..	Raniganj ..	Rice ..	Last market day of the 3rd week of every month.	11 4	12 0	12 0	11 12
Tangail ..	Kagmari ..	Do. ..	Ditto	10 4	10 4	10 4	10 4
Netrakona ..	Netrakona ..	Do. ..	Ditto	10 0	9 6	11 0	10 2
Sadar ..	Mechuabazar ..	Do. ..	Ditto	10 0	10 0	11 0	10 5
Kishorganj ..	Kishorganj ..	Do. ..	Ditto	10 0	10 0	10 0	10 0
FARIDPUR.							
Sadar ..	Faridpur ..	Do. ..	Last market day of every month	12 0	12 0	13 1	12 6
Madaripur ..	Madaripur ..	Do. ..	On the market day preceding the 28th of every month.	12 0	13 0	13 0	12 11
Goalundo ..	Rajbari ..	Do. ..	Ditto	11 8	11 8	12 0	11 11
Gopalganj ..	Gopalganj ..	Do. ..	Last market day of every month	12 0	16 0	14 0	14 0
BAKARGANJ.							
Patuakhali ..	Patuakhali ..	Do. ..	Last market day preceding the last day of every month.	9 8	10 0	10 0	9 13
Pirojpur ..	Rajganj ..	Do. ..	Ditto	10 0	10 0	10 0	10 0
Sadar ..	Barisal ..	Do. ..	Last day of every month ..	10 0	9 8	10 0	9 13
Dakshin Shahbazpur.	Bhola Hât ..	Do. ..	Last market day preceding the last day of every month.	9 14	10 0	13 0	10 15

CHITTAGONG DIVISION.

TIPPERA.				S. c.	S. c.	S. c.	S. c.
Subdivision—							
Brahmanbaria	Brahmanbaria	Rice ..	Market day immediately preceding the 28th of every month.	11 7	11 7	12 5	11 12
Sadar ..	Rajganja Bazar, Comilla.	Do. ..	Last market day of every month	8 14	8 14	10 0	9 4
Chandpur ..	Chandpur Old Bazar.	Do. ..	Market day immediately preceding the 28th of every month.	11 0	11 4	12 0	11 7
NOAKHALI.							
Sadar ..	Bara Bazar ..	Do. ..	Last market day of every month.	10 0	11 14	13 8	11 13
Feni ..	Feni Bazar ..	Do. ..	Ditto	12 0	13 5	13 15	13 1
CHITTAGONG.							
Sadar ..	Buxir HÂt ..	Do. ..	Last Saturday of every month	11 8	12 0	12 8	12 0
Cox's Bazar ..	Cox's Bazar ..	Do. ..	Friday immediately preceding the 26th, or the 26th if that day happens to be a Friday.	12 0	13 0	13 0	12 11

RAJSHAHI DIVISION.

RAJSHAHI.				S. c.	S. c.	S. c.	S. c.
Subdivision—							
Sadar ..	Saheb Bazar ..	Rice ..	Last day of every month ..	10 8	10 12	12 0	11 1
Naogaon ..	Naogaon ..	Do. ..	Ditto	10 8	11 0	12 0	11 3
Nator ..	Nator ..	Do. ..	Ditto	10 8	10 8	14 4	11 12
DINAJPUR.							
Sadar ..	Rail Bazar HÂt	Do. ..	Last market day of every month.	13 0	11 4	15 8	13 4
Thakurgaon	Lahirihat ..	Do. ..	....	14 4	14 4	16 0	14 13
Balurghat ..	Balurghat ..	Do. ..	....	11 8	16 0	16 0	14 8
JALPAIGURI.							
Alipur Duars	Alipur Duars ..	Do. ..	....	11 8	10 0	15 0	12 3
Sadar ..	Dinbazar ..	Do. ..	15th of every month ..	9 8	10 0	14 0	11 3

RAJSHAHI DIVISION—*concluded.*

Local areas.	Marts at which prices were taken.	Staple food-crop or crops.	Market days for the preparation of price-lists.	Quantities per rupee in seers of 80 tolas, Company's weight.			Average price for the quarter ending the 31st December 1934.
				October.	November.	December.	
				S. c.	S. c.	S. c.	S. c.
RANGPUR.							
Subdivision—							
Sadar ..	Nawabganj Chaliaamad, Rangpur.	Rice ..	Last Wednesday or Saturday, whichever may be close to the last day of every month.	10 2	10 2	10 2	10 2
Nilphamari ..	Sagarmacha ..	Do. ..	Last Wednesday or Sunday, whichever may be close to the 28th of every month.	12 0	12 0	12 8	12 3
Kurigram ..	Kurigram ..	Do. ..	Last Saturday or Tuesday next to the 28th of every month.	10 11	11 12	12 13	11 12
Gaibandha ..	Gaibandha Bazar	Do. ..	27th of every month ..	9 8	12 0	12 0	11 3
BOGRA.							
District of Bogra	Kalitala Hât ..	Do. ..	Last Sunday of every month ..	9 6	11 13	14 10	11 15
PABNA.							
Subdivision—							
Sadar ..	Pabna Bazar ..	Do. ..	15th of every month ..	10 0	10 0	10 4	10 1
Serajganj ..	Fariapati at Serajganj.	Do. ..	Ditto	10 0	10 0	10 0	10 0
MALDA.							
District of Malda	Balia Nawabganj	Do. ..	Second Wednesday of every month.	10 15	11 4	14 5	12 3

Printed and published by the Superintendent, Government Printing, Bengal Government Press, Alipore, Bengal, on the 21st March 1935.

Registered No. C207

The Calcutta Gazette

Extraordinary

Published by Authority

WEDNESDAY, MARCH 27, 1935.

GOVERNMENT OF BENGAL.

Local Self-Government Department.

(Municipal.)

NOTIFICATION.

Minister-in-charge: The Hon'ble Sir Bijoy Prasad Singh Roy, Kt.

No. 2192M.—26th March 1935.—In exercise of the power conferred by clause (*b*) of section 5 of the Calcutta Municipal Act, 1923 (Bengal Act III of 1923), the Government of Bengal (Ministry of Local Self-Government) are pleased to appoint the following to be Councillors of the Corporation of Calcutta:—

(1) The Chairman of the Calcutta Improvement Trust (*ex-officio*).
(2) Rev. B. A. Nag, M.L.C.
(3) Mr. K. C. Ray Choudhury, M.L.C.
(4) Mr. L. T. Maguire, M.L.C.
(5) Mr. C. C. Biswas, M.L.A., C.I.E.
(6) Maulvi Muhammad Saadatullah, M.L.C.
(7) Maulvi Abul Kasem, M.L.C.
(8) Mr. Sudhansu Kumar Mitter.
(9) Babu Debendra Nath Das.
(10) Mr. B. N. Rai Choudhury, M.A., B.L., Bar.-at-Law.

2. Under section 39 of the said Act, the Government of Bengal (Ministry of Local Self-Government) are further pleased to direct that these Councillors shall hold office up to the 31st March 1936.

G. S. DUTT,
Secy. to the Govt. of Bengal.

Printed and published by the Superintendent, Government Printing, Bengal Government Press, Alipore, Bengal, on the 27th March 1935.

Registered No. C207

Secy. 28/3

No. 13 of 1935

The Calcutta Gazette

Published by Authority

THURSDAY, MARCH 28, 1935.

CONTENTS:

	Page.
Part I.—Orders and Notifications by the Governor of Bengal, the Government of Bengal, the High Court, Government Treasury, etc.	583—628
Part IA.—Orders and Notifications by the Government of India republished for general information	57—61
Part IB.—Educational Notices ..	369—383
Part II.—Advertisements	387—399
Part III.—Acts of the Bengal Legislative Council—	
The Bengal Alluvial Lands (Amendment) Act, 1934	11—16
Part IV.—Bills introduced in the Bengal Legislative Council, Reports of Select Committees presented or to be presented to that Council, and Bills published before introduction in that Council—	
Report of the Select Committee on the Estates Partition (Second Amendment) Bill, 1935, with the Bill embodying amendments recommended by the Committee	129—132
Part V.—Acts of the Indian Legislature assented to by the Governor-General and Ordinances promulgated under section 72 of the Government of India Act—	
The Indian Naturalization (Amendment) Act, 1935	1—2
Part VI.—Bills introduced in the Council of State and Legislative Assembly, Reports of Select Committees presented to the Council and Assembly and Bills published under rule 18 of the Indian Legislative Rules—	
The Indian Income-tax (Amendment) Bill, 1935, with Statement of Objects and Reasons and Notes on Clauses ..	29—31
The Indian Finance Bill, 1935, with Statement of Objects and Reasons ..	32—36
The Code of Civil Procedure (Third Amendment) Bill, 1935, with Statement of Objects and Reasons	37—38
The Indian Coastal Traffic (Reservation) Bill, 1935, with Statement of Objects and Reasons	39—42
The Salt Additional Import Duty (Extending) Bill, 1935, with Statement of Objects and Reasons	43
Appendix.—General Jury List—List of persons liable to serve on Common and Special Juries in the High Court of Judicature at Fort William in Bengal for the year ensuing from 1st May 1935 pursuant to Act V of 1898	1—168
Supplement No. 13 :—	
Cotton Ginning and Pressing—Monthly and Annual Rainfall—Daily Rainfall—Weekly Gauge Readings—Weekly Vital Statistics—Weekly Weather and Crop Report—Prices-current	395—442

PART I

Orders and Notifications by the Governor of Bengal, the Government of Bengal, the High Court, Government Treasury, etc.

Orders by His Excellency the Governor of Bengal.

No. 3117A.—25th March 1935.—His Excellency the Governor of Bengal has been pleased to confirm Lieutenant W. S. F. Hickie, The King's Own Yorkshire Light Infantry, in his appointment as an Aide-de-Camp on his personal staff with effect from the 1st April 1935.

No. 3213A.—26th March 1935.—Under the provisions of section 93 of the Government of India Act, His Excellency the Governor is pleased to accept the resignation tendered by Mr. Binay Ranjan Sen, I.C.S., of his office of member of the Bengal Legislative Council.

No. 3216A.—26th March 1935.—In exercise of the powers conferred by rule 26 (*2*) of the Bengal Electoral Rules, His Excellency the Governor is pleased to nominate Mr. Sukumar Basu, I.C.S., an official, to be a member of the Bengal Legislative Council.

No. 3219A.—26th March 1935.—Under the provisions of section 93 of the Government of India Act, His Excellency the Governor is pleased to accept the resignation tendered by Mr. A. deC. Williams, I.C.S., of his office of member of the Bengal Legislative Council.

No. 3222A.—26th March 1935.—In exercise of the powers conferred by rule 26 (*2*) of the Bengal Electoral Rules, His Excellency the Governor is pleased to nominate Rai Sahib Manomohan Mukharji, an official, to be a member of the Bengal Legislative Council.

E. N. BLANDY,
Chief Secy. to the Govt. of Bengal (offg.).

Orders by the Government of Bengal.

No. 3205A.

Appointments and Transfers.

GENERAL.

Bakarganj.—No. 2905A.—15th March 1935.—Maulvi Aminuzzaman Khan, Deputy Magistrate and Deputy Collector, Bakarganj, is appointed to have charge of the Sadar subdivision of that district.

Calcutta.—No. 2919A.—16th March 1935.—Mr. S. Basu, I.C.S., officiating Deputy Secretary to the Government of Bengal in the Finance, Commerce and Marine Departments, is appointed to act, until further orders, as Deputy Secretary to Government in the Political and Appointment Departments.

Dacca Divn.—No. 2968A.—18th March 1935.—Maulvi Muhammad Ishaq, No. II, Sub-Deputy Collector, on leave, is posted to the Dacca Division.

Jalpaiguri. — No. 2978A. — 19th March 1935.—Babu Jitendra Chandra Mazumdar, Deputy Magistrate and Deputy Collector, Jalpaiguri, is appointed temporarily to have charge of the Sadar subdivision of that district.

Bakarganj. — No. 2980A. — 19th March 1935.—Khan Bahadur Muhammad Mahmud, officiating Additional District Magistrate, Bakarganj, acted, in addition to his duties, as Magistrate and Collector of that district from the 1st February to the 22nd February 1935, inclusive.

Calcutta.—No. 2989A.—20th March 1935.—The services of Mr. A. deC. Williams, I.C.S., Secretary to the Government of Bengal in the Legislative Department, are, with effect from 29th March 1935, placed temporarily at the disposal of the Government of India in the Legislative Department.

Rajshahi-Malda.—No. 3016A.—21st March 1935.—The services of Mr. A. L. Blank, I.C.S., District and Sessions Judge, Rajshahi and Malda, are placed at the disposal of the Government of Assam.

Murshidabad.—No. 3023A.—21st March 1935.—Mr. R. W. Morde, Deputy Magistrate and Deputy Collector, Murshidabad, is appointed temporarily to have charge of the Lalbagh subdivision of that dstrict.

Rajshahi-Jalpaiguri.—No. 3027A. — 21st March 1935.—Mr. S. B. Hatch-Barnwell, I.C.S., Assistant Magistrate and Collector, Rajshahi, is transferred to the headquarters station of the Jalpaiguri district.

Calcutta-Howrah.—No. 3070A.—23rd March 1935.—Maulvi Molla Abdul Majid, Deputy Magistrate and Deputy Collector, employed in the Political and Appointment Departments, Bengal Secretariat, is appointed to have charge of the Uluberia subdivision of the Howrah district.

Rangpur-Darjeeling.—No. 3080A.—23rd March 1935.—Mr. R. A. S. Stracey, I.C.S., Assistant Magistrate and Collector, Rangpur, is appointed to have charge of the Kalimpong subdivision of the Darjeeling district.

Darjeeling-Dacca.—No. 3083A. — 23rd March 1935.—Mr. W. A. S. Lewis, I.C.S., Joint Magistrate and Deputy Collector, Kalimpong, Darjeeling, is appointed to have charge of the Narayanganj subdivision of the Dacca district.

Rajshahi.—No. 3087A.—23rd March 1935.—Mr. R. S. Krishnaswamy, I.C.S., Joint Magistrate and Deputy Collector, on leave, is appointed to have charge of the Naogaon subdivision of the Rajshahi district.

24-Parganas - Midnapore. — No. 3092A.—23rd March 1935.—Mr. N. Ray Chaudhury, I.C.S., Joint Magistrate and Deputy Collector, 24-Parganas, is appointed to have charge of the Jhargram subdivision of the Midnapore district.

Burdwan - Tippera. — No. 3097A.—23rd March 1935.—Mr. R. J. Pringle, I.C.S., Assistant Magistrate and Collector, Burdwan, is posted to the Chandpur subdivision of the Tippera district.

Burdwan Divn.—No. 3113A.—25th March 1935.—Mr. L. R. Fawcus, I.C.S., on leave, is appointed temporarily to act as Commissioner of the Burdwan Division.

Calcutta.—No. 3225A.—26th March 1935.—Mr. H. D. Benjamin, I.C.S., is appointed temporarily to act as Secretary to this Government in the Legislative Department.

POLICE.

Calcutta.—No. 2865A.—14th March 1935.—Mr. A. D. Gordon, C.I.E., I.P., Deputy Inspector-General of Police, is appointed to act as Commissioner of Police, Calcutta, during the absence, on leave, of Mr. L. H. Colson, C.I.E., I.P., or until further orders.

Rajshahi - Midnapore.—No. 3077A.—23rd March 1935.—Captain J. C. Jones, I.A., Additional Superintendent of Police, Rajshahi, is posted as Additional Superintendent of Police of the Midnapore district.

Birbhum - Chittagong.—No. 3121A.—25th March 1935.—Captain H. F. C. Armstrong, Additional Superintendent of Police, Birbhum, is posted as Additional Superintendent of Police of the Chittagong district.

ECCLESIASTICAL.

Darjeeling. — No. 2954A. — 18th March 1935.—The services of the Reverend W. Boulton, Chaplain of Lebong, are placed at the disposal of the Government of Assam, with effect from the 11th March 1935, or any subsequent date on which he may be relieved.

Darjeeling. — No. 2957A. — 18th March 1935.—The Reverend Canon C. G. Pearson, a Chaplain on the Indian Ecclesiastical Department (Bengal), on leave, is appointed to be Chaplain of Darjeeling, with effect from the 11th March 1935.

Leave.

GENERAL.

Tippera.—No. 2859A.—14th March 1935. — Babu Braja Nath Ray, Deputy Magistrate and Deputy Collector, Tippera, is allowed leave on average pay for three days, under rule 81 (*b*) (*ii*) of the Fundamental Rules, from the 16th April 1935.

Calcutta.—No. 2916A.—16th March 1935.—Mr. B. R. Sen, I.C.S., Deputy Secretary to the Government of Bengal, Political and Appointment Departments, is allowed leave on average pay for eight months, under rule 81 (*b*) (*i*) of the Fundamental Rules, with effect from the 2nd April 1935, or any subsequent date on which he may be relieved.

24-Parganas. — No. 2972A. — 18th March 1935.—Mr. R. K. Ray, I.C.S., Joint Magistrate and Deputy Collector, Diamond Harbour, 24-Parganas, is allowed leave on average pay for three days, under rule 81(*b*) (*ii*) of the Fundamental Rules, with effect from the 18th April 1935.

Mymensingh. — No. 2975A.—18th March 1935.—Babu Chandra Shekhar Mitra, Deputy Magistrate and Deputy Collector, Netrakona, Mymensingh, is allowed leave on average pay for ten days, under rule 81(*b*) (*ii*) of the Fundamental Rules, with effect from the 23rd April 1935.

No. 3010A.—21st March 1935.—Mr. L. R. Chambers, I.C.S., has been granted by the High Commissioner for India an extension of leave not due, on medical certificate, for two months on half average pay.

Murshidabad.—No. 3021A. — 21st March 1935.—Mr. R. S. Trivedi, I.C.S., Joint Magistrate and Deputy Collector, Lalbagh, Murshidabad, is allowed leave on average pay, under rule 81 (*b*) (*ii*) of the Fundamental Rules, with effect from the 8th April 1935, or any subsequent date on which he may be relieved, to the 6th July 1935, inclusive.

Calcutta. — No. 3033A.—21st March 1935.—Rai Jitendra Nath Sarkar Bahadur, Deputy Magistrate and Deputy Collector, employed as Assistant Secretary to the Government of Bengal in the Revenue Department, is allowed leave on average pay for four months, under the proviso to rule 81 (*b*) (*ii*) of the Fundamental Rules, with effect from the 2nd April 1935, or any subsequent date on which he may be relieved.

Mymensingh. — No. 3047A.—22nd March 1935.—In modification of the orders of the 19th February 1935, Babu Manoranjan Chaudhuri, Deputy Magistrate and Deputy Collector, on probation, Jamalpur, Mymensingh, is allowed leave on average pay for six days, under rule 81 (*b*) (*ii*) of the Fundamental Rules, with effect from the 25th March 1935.

Nadia. — No. 3058A.—23rd March 1935.—Mr. Abul Muzaffar Ahmad, District and Sessions Judge, Nadia, is allowed leave on average pay for three days, under rule 81 (*b*) (*ii*) of the Fundamental Rules, with effect from the 16th April 1935.

Chittagong. — No. 3062A. — 23rd March 1935.—Maulvi Saiyid Salamatullah, Deputy Magistrate and Deputy Collector, Cox's Bazar, Chittagong, is allowed leave on average pay for ten days, under rule 81 (*b*) (*ii*) of the Fundamental Rules, with effect from the 12th March 1935.

Burdwan Divn.—No. 3109A.—25th March 1935.—Mr. L. B. Burrows, C.B.E., officiating Commissioner of the Burdwan Division, is allowed leave with effect from the 18th April 1935, or any subsequent date on which he may be relieved, up to the 29th September 1935, viz., leave on average pay for two months and twenty-two days, under rule 81 (*b*) (*ii*) of the Fundamental Rules, and leave on half average pay for the remaining period, under rule 81 (*d*) of those Rules.

POLICE.

Calcutta.—No. 2862A.—14th March 1935.—Mr. L. H. Colson, C.I.E., I.P., Commissioner of Police, Calcutta, is allowed leave for six months and fourteen days, viz., leave on average pay for four months and fourteen days, under rule 81 (*b*) (*i*) of the Fundamental Rules, with effect from the 4th April 1935, or any subsequent date on which he may be relieved, and leave on half average pay for the remaining period, under rule 81 (*d*) of those Rules.

Howrah.—No. 2997A.—20th March 1935.—Mr. S. Stratton, Deputy Superintendent of Police, Howrah, is allowed leave for twenty-eight months, viz., leave on average pay for eight months, under rule 81 (*b*) (*i*) of the Fundamental Rules, with effect from the 5th April 1935, or any subsequent date on which he may be relieved, and leave on half average pay for the remaining period, under rule 81(*d*) of those Rules.

No. 3011A.—21st March 1935.—Mr. J. C. Farmer, I.P., Deputy Inspector-General of Police, has been granted by the High Commissioner for India an extension of leave on half average pay for eight days.

Mymensingh. —, No. 3103A.—23rd March 1935.—Mr. Shah Abul Hasanat Muhammad Ismail, officiating Additional Superintendent of Police, Mymensingh, is allowed leave on average pay for five weeks, under rule 81 (*b*) (*ii*) of the Fundamental Rules, with effect from the 21st February 1935.

E. N. BLANDY,

Chief Secy. to the Govt. of Bengal (*offg.*).

NOTIFICATION.

No. 3144A.—25th March 1935.—It is hereby notified for general information that the first half-yearly departmental examination in 1935 of Assistant Magistrates, Deputy and Sub-Deputy Collectors in the regulation and non-regulation districts, of Cantonment Magistrates and of officers of the Police, Medical, Forest, Commerce, Public Works, Irrigation, Excise, Education, Imperial Customs, Agriculture, Industries and Civil Veterinary Departments and Inspectors of Mines will be held on Monday, the 13th May 1935, and the three following days, viz., 14th, 15th and 16th May 1935.

E. N. BLANDY,

Chief Secy. to the Govt. of Bengal (*offg.*).

POLITICAL DEPARTMENT.

Political.

NOTIFICATIONS.

No. 3173P.—22nd March 1935.—Notification No. 11825P., dated the 28th April 1932, published in the *Calcutta Gazette*, dated the 28th April 1932, declaring the association in the district of Faridpur named in the schedule hereto annexed to be an unlawful association under section 16 of the Indian Criminal Law Amendment Act, 1908, is hereby cancelled—

Schedule.

Seva Samity of Khonganj, police-station Pangsha.

No. 3217P.—23rd March 1935.—In exercise of the power conferred by section 24 of the Bengal Suppression of Terrorist Outrages Act, 1932 (Ben. Act XII of 1932), the Governor in Council is pleased to invest Babu Satish Chandra Mazumdar, Sadar Subdivisional Magistrate, 24-Parganas, with the powers of a Special Magistrate under the said Act.

E. N. BLANDY,

Chief Secy. to the Govt. of Bengal (*offg.*).

Special.

NOTIFICATION.

No. 8251X.—27th March 1935.—Whereas in the opinion of the Government of Bengal there are reasonable grounds for believing that Babu Nagendra Nath Das, son of Babu Krishna Chaitanya Das, of village Nazirpur, police-station Gurudaspur, in the district of Rajshahi, is a person in respect of whom an order may lawfully be made under sub-section (*1*) of section 2 of the Bengal Criminal Law Amendment Act, 1930; and

Whereas the Governor in Council on the 6th February 1935 in exercise of the powers conferred by the said section 2 was pleased to order the said Babu Nagendra Nath Das to be committed to custody in the nearest District or Central Jail, and the arrest without warrant of the said Babu Nagendra Nath Das at any place where he might be found by any police officer with a view to his commitment to custody; and

Whereas the said Babu Nagendra Nath Das has not been arrested and the said order under section 2 of the said Act has not been served personally on the said person, and whereas due diligence has in the opinion of the Local Government been exercised to effect such personal service;

Now, therefore, the Governor in Council in exercise of the powers conferred by sub-section (2) of section 3 of the Bengal Criminal Law Amendment Act, 1930, is pleased to direct the said Babu Nagendra Nath Das, son of Babu Krishna Chaitanya Das, of village Nazirpur, police-station Gurudaspur, in the district of Rajshahi, to appear before the Superintendent of Police, Rajshahi, at Rajshahi, within 15 days of this date for the purpose of receiving the aforesaid order.

S. N. ROY,

Addl. Secy. to the Govt. of Bengal.

Jails.

NOTIFICATIONS.

Rajshahi-Dacca. — No. 1111P.J. — 23rd March 1935.—Major S. L. Patney, I.M.S., Superintendent, Rajshahi Central Jail, is appointed to be Superintendent of the Dacca Central Jail, *vice* Mr. A. H. W. Leonard, proceeding on leave.

Rajshahi. — No. 1114P.J. — 23rd March 1935.—Captain F. H. A. L. Davidson, I.M.S., Civil Surgeon, Rajshahi, is appointed to act as Superintendent of the Rajshahi Central Jail, in addition to his own duties, with effect from the date on which he takes over charge from Major S. L. Patney, I.M.S., who is under orders of transfer to the Dacca Central Jail.

Calcutta.—No. 1123P.J.—23rd March 1935.—Lieutenant-Colonel M. A. Singh, I.M.S., Superintendent, Presidency Jail, is allowed leave on average pay for eight months, under the proviso to rule 81 (*b*) (*ii*) of the Fundamental Rules, with effect from the 26th April 1935, or any subsequent date on which he may be relieved.

E. N. BLANDY,

Chief Secy. to the Govt. of Bengal (offg.).

Orders by the Inspector-General of Prisons, Bengal.

No. 6896.—25th March 1935.—Lt.-Col. B. G. Mallya, I.M.S., made over charge of the Howrah Jail to Dr. Jyoti Prosad Mittra on the forenoon of the 1st March 1935.

No. 6898.—25th March 1935.—Dr. R. R. Ghosh made over charge of the Khulna Jail to Dr. Norendra Nath Ghosh on the afternoon of the 6th March 1935.

No. 6900.—25th March 1935. — Lt.-Col. B. H. Singh, I.M.S., made over charge of the Burdwan Jail to Dr. Khagendra Mohan Bose on the afternoon of the 12th March 1935.

R. E. FLOWERDEW, LT.-COL., I.M.S.,

Inspector-General of Prisons, Bengal.

POLICE DEPARTMENT.

NOTIFICATION.

No. 1596Pl.—25th March 1935.—In exercise of the power conferred by section 35 of the Court-fees Act, 1870 (VII of 1870), the Governor in Council is pleased to direct that clause (2) of Notification No. 1711Pl., dated the 17th June 1924, published at page 1197 of Part I of the *Calcutta Gazette*, dated the 25th June 1924, shall be deleted.

E. N. BLANDY,

Chief Secy. to the Govt. of Bengal (offg.).

Calcutta Police Notification.

No. 2353/157-14.—22nd March 1935.—The following draft of a notification which, with the previous sanction of the Governor in Council, the Commissioner of Police, Calcutta, proposes to issue under sub-section (*1*) of section 62 of the Calcutta Police Act, 1866 (Bengal Act IV of 1866), is hereby published for the information of persons likely to be affected thereby.

The draft will be taken into consideration on or after the 27th April 1935 and any objection or suggestions which may be received by the undersigned by that date will be duly considered:—

Draft notification.

In exercise of the powers conferred by clauses (*b*) and (*c*) of sub-section (*1*) of section 62 of the Calcutta Police Act, 1866 (Bengal Act IV of 1866), the

Commissioner of Police, Calcutta, with the previous sanction of the Governor in Council, hereby makes the following amendments in the "Rules for the regulation of traffic, in the streets and public places of Calcutta and suburbs," published under Calcutta Police Notification No. 134, dated the 6th January 1932, at pages 37-99, Part I of the *Calcutta Gazette* of the 14th January 1934:—

Amendments.

I. *Substitute* the following for rules 41 to 46 under sub-heading "(*b*) one-way traffic" in Part II of the said rules:—

41. Between the hours of 7 a.m. and 7 p.m. Mullick Street, south, and Amratolla Street shall be open to traffic proceeding north only. No traffic proceeding south shall enter Mullick Street, southwards from Harrison Road, Cross Street or Rup Chand Roy Street. Similarly no traffic proceeding south shall enter Amratolla Street from Mullick Street, Armenian Street, Amratolla Lane or Karballa Mohommed Street.

42. From 7 a.m. to 7 p.m. Cross Street, Armenian Street from its junction with Kengraputty to its junction with Amratolla Street, Amratolla Lane and Gobinda Dhar Lane shall only be open to traffic proceeding from west to east.

43. Armenian Street from its junction with Chitpore Road to its junction with Amratolla Street shall be a one-way street from west to east in respect of cart traffic only. Private motor and horse-driven conveyances, taxicabs, hackney-carriages and rickshaws may use this portion of this street without any one-way restrictions.

For purposes of this rule and rules 14, 15, 22, 44, 45, 46, 47 and 49 the expression "cart traffic" shall include all bullock, buffalo, hand, trolley, horse, mule or goat carts used for the purpose of conveying goods, conservancy or advertisements.

44. Amratolla Lane from its junction with Chitpore Road to the north-western corner of No. 3, Amratolla Lane and Gobinda Dhar Lane shall be one-way streets from west to east only in respect of cart traffic. Private motor and horse-driven conveyances, taxicabs, hackney-carriages and rickshaws may use Amratolla Lane between the points specified above and Gobinda Dhar Lane without any one-way restrictions. The remaining portion of Amratolla Lane from Amratolla Street to the south-western corner of No. 3, Amratolla Lane shall be a "one-way" street. This latter restriction shall apply to all vehicles.

45. *Cart traffic* shall not enter Armenian Street and proceed in a westward direction for any distance from Chitpore Road, Rup Chand Roy Street, Gobinda Dhar Lane, Mullick Street, Portuguese Church Street and Nur Mull Lohia Lane.

46. *Cart traffic* shall only proceed from south to north along Portuguese Church Street; no cart traffic shall enter and proceed southwards along Portuguese Church Street for any distance from Armenian Street, Karballa Mohommed Street and Synagogue Street.

(*1*) The stabling of bullocks and buffaloes shall be prohibited on any of the streets lying within the following boundaries and on the roads mentioned below:—

Boundary.

North—Harrison Road.

South—Canning Street and Colootolla Street.

East—Chittaranjan Avenue.

West—Strand Road.

These animals must be stabled in their *khatals* and only be brought into the streets mentioned above and lying within the specified boundary when the carts are ready for immediate removal from the area.

(*2*) The parking of carts on any of the streets mentioned in sub-rule (*1*) and lying within the boundary specified therein shall be prohibited except at such places and under such conditions as specified in Schedule K.

(*3*) Vacancies on the cart-stands mentioned in Schedule K shall be replenished by carts from the main feeder stands on Tara Chand Dutt Street and Synagogue Street.

(*4*) Empty carts proceeding from the main stand on Tara Chand Dutt Street to Amratolla Street shall proceed by the following route only:—

Via Chitpore Road and Canning Street.

(*5*) Empty carts proceeding from the main stand on Synagogue Street to Portuguese Church Street, Karballa Mohommed Street and Armenian Street west of Amratolla Street junction by the following route only:—

northward along Portuguese Church Street and eastward along Karballa Mohommed Street and Armenian Street.

(*6*) No empty carts shall leave the main stands on Tara Chand Dutt Street and Synagogue Street to replenish any of the cart-stands mentioned in Schedule K unless and until a vacancy actually exists on one of the standing places.

(*7*) Carts, loaded or unloaded, shall not enter Amratolla Street from Canning Street unless and until a vacancy exists on the western side of the said street.

Loaded carts which cannot because of the restrictions mentioned above, enter Amratolla Street shall park in a single line parallel to and close to the kerb on the north side of Canning Street facing east between its junction with Amratolla Street and, if necessary, to its junction with Jackson Lane.

(*8*) All carts on the standing places shall be parked "Khatalled," *i.e.*, one cart to be run on to the other, yokes, except where specified otherwise in Schedule K, facing the same directions as the flow of traffic in the street where the stand is located.

II. After Schedule I annexed to the said rules the following Schedule shall be inserted, namely:—

Schedule K.

[See Part II, Rule 46 (*2*), (*3*), (*6*) and (*8*).]

Number of carts and conditions under which they must be parked.

Armenian Street.

(*1*) Fourteen empty carts in two rows of seven each in front of premises No. 26/1, Armenian Street starting from eastern wall.

(*2*) Four empty carts in front of premises No. 16/2, Armenian Street on the south side facing east.

(*3*) Two empty carts in front of premises No. 12, Armenian Street facing east on the south side of the street.

Gobinda Dhar Lane.

(*4*) Five empty carts in front of premises No. 17, Gobinda Dhar Lane, facing north.

Amratolla Street.

(*5*) Three empty carts in front of premises No. 11, Amratolla Street, *i.e.*, between premises Nos. 20 and 21, Amratolla Street on the western side facing north.

(*6*) Three empty carts in front of premises No. 18, Amratolla Street on the western side facing north.

(*7*) Four empty carts in front of premises No. 23, Amratolla Street on the western side facing north.

(*8*) Five empty carts in front of premises No. 25, Amratolla Street on the western side facing north starting from the north of the entrance door of the above premises.

(*9*) Five empty carts in front of premises No. 29, Amratolla Street on the western side facing north starting from the south of the entrance door of the above premises.

(*10*) Three empty carts in front of premises No. 27, Amratolla Street on the western side facing north starting from the entrance door of the above premises.

Amratolla Lane.

(*11*) Five empty carts in front of premises No. 20, Amratolla Lane on the western side facing north.

(*12*) Ten empty carts between 11 and 12, Amratolla Lane on the north side facing east.

Synagogue Street.

(*13*) Twelve empty carts in front of premises No. 7, Synagogue Street stuck up against the west boundary wall of the Catholic Male Orphanage facing south.

Karballa Mohommed Street.

(*14*) Two carts for the purpose of loading and unloading in the bays on either side of the street.

Tara Chand Dutt Street.

(*15*) A standing place for empty carts between 8 a.m. and 7 p.m. shall exist on Tara Chand Dutt Street from its junction with Chitpore Road to its junction with Ram Lochan Mullick Street. The buffaloes with carts shall be unyoked at a wider space in the north-west corner of Ram Lochan Mullick Street and thereafter the empty carts will be taken by the carters to the stand allotted and buffaloes removed immediately.

Carts shall be parked on this standing place in two lines—one cart to be run on to the other—in the centre of the road, yokes facing west.

L. H. COLSON,
Commissioner of Police, Calcutta.

JUDICIAL DEPARTMENT.

No. 3206A.

Powers.

Murshidabad-Khulna.—No. 2984A. — 19th March 1935.—The Deputy Magistrates, on probation, named below, are vested with the powers of a Magistrate of the first class:—

Babu Brojendra Prasad Neogi, Murshidabad.
Maulvi Mir Husain, Khulna.

Bakarganj. — No. 3068A. — 23rd March 1935.—Maulvi Abdul Latif, Deputy Magistrate, Dakshin Shahbazpur, Bakarganj, is vested with powers under section 110 of the Code of Criminal Procedure.

Howrah.—No. 3119A.—25th March 1935.—In exercise of the powers conferred by sub-section (*1*) of section 164 of the Code of Criminal Procedure, 1898 (Act V of 1898), the Governor in Council is pleased to empower Babu Ashutosh Das Gupta, a Sub-Deputy Magistrate, also a Magistrate of the 2nd class at Uluberia, in the district of Howrah, to record any statement or confession made to him in the course of an investigation under Chapter XIV of the said Code or at any time afterwards before the commencement of enquiry or trial.

E. N. BLANDY,
Chief Secy. to the Govt. of Bengal (offg.).

Appointments and Transfers.

Mymensingh. — No. 2479J.—13th March 1935.—In exercise of the powers conferred by sections 14 and 15 and the proviso to section 357 of the Code of Criminal Procedure, 1898 (Act V of 1898), the Governor in Council is pleased—

(*a*) to confer upon each of the gentlemen named below the powers of a Magistrate of the third class, in the district of Mymensingh, for a period of three years from the date of this notification,

(*b*) to direct him to sit as a member of the Tangail bench in the said district, and

(*c*) to direct him to take down evidence in the English language:—

Maulvi Ebrahim Khan.
Babu Sarat Kamal Bhattacharji.

24-Parganas.—No. 2481J. — 13th March 1935.—In exercise of the powers conferred by sections 14 and 15 and the proviso to section 357 of the Code of Criminal Procedure, 1898 (Act V of 1898), the Governor in Council is pleased—

(*a*) to confer upon Babu Sanjib Chandra Basu the powers of a Magistrate of the third class, in the district of the 24-Parganas, for a period of three years from the date of this notification,

(*b*) to direct him to sit as a member of the Naihati bench in the said district, and

(*c*) to direct him to take down evidence in the English language.

Tippera-Noakhali. — No. 2575J. — 16th March 1935.—Mr. Phanindra Mohan Lahiri, officiating munsif of Comilla, in the district of Tippera, is appointed to act as a munsif in the district of Noakhali, to be ordinarily stationed at Lakshmipur, during the absence, on leave, of Maulvi Ghulam Azam Chaudhuri, or until further orders.

Dacca-24-Parganas. — No. 2577J. — 16th March 1935. — Babu Ajita Ranjan Mukharji, officiating munsif of Dacca (Sadar), is appointed to act as a munsif in the district of the 24-Parganas, to be ordinarily stationed at Baruipur, during the absence, on leave, of Babu Jyotish Chandra Gupta, or until further orders.

Burdwan.—No. 2608J.—18th March 1935.—In exercise of the powers conferred by sections 14 and 15 of the Code of Criminal Procedure, 1898 (Act V of 1898), the Governor in Council is pleased—

(*a*) to confer upon Mr. W. H. Bates the powers of a Magistrate of the third class, in the district of Burdwan, for a period of three years from the 16th April 1935, in respect to such cases as may be made over to him within the limits of the Asansol subdivision of the said district, and

(*b*) to direct that he shall, in addition to sitting singly, sit as a member of the Raniganj bench in the said district.

Bakarganj. — No. 2619J. — 18th March 1935.—Babu Saurindra Mohan Banarji is appointed to act as a munsif in the district of Bakarganj, to be ordinarily stationed at Patuakhali, during the absence, on leave, of Babu Bhabesh Chandra Sen Gupta, or until further orders.

Calcutta.—No. 2633J.—19th March 1935.—The services of Mr. Nural Azeem Khundkar, Barrister-at-Law, Deputy Superintendent and Remembrancer of Legal Affairs, Bengal, are placed temporarily at the disposal of the Government of India in the Home Department.

Murshidabad. — No. 2653J. — 21st March 1935.—In exercise of the powers conferred by sections 14 and 15 and the proviso to section 357 of the Code of Criminal Procedure, 1898 (Act V of 1898), the Governor in Council is pleased—

(*a*) to confer upon Rai Sahib Tarak Nath Bhattacharji the powers of a Magistrate of the second class, in the district of Murshidabad, for a period of three years from the date of this notification, in respect to such cases as may be made over to him within the limits of the Sadar subdivision of the said district,

(*b*) to direct that he shall, in addition to sitting singly, sit as a member of the Sadar bench in the said district, and

(*c*) to direct him to take down evidence in the English language.

Calcutta.—No. 2727J.—23rd March 1935.—Mr. Debendra Narain Bhattacharji, Advocate, High Court, Calcutta, is appointed to act as Deputy Superintendent and Remembrancer of Legal Affairs, Bengal, during the absence, on deputation, of Mr. N. A. Khundkar, to act as a Judge of the High Court, Calcutta, or until further orders.

Mymensingh-Tippera.—No. 2747J. — 23rd March 1935.—Babu Dwarka Nath De, munsif of Bajitpur, in the district of Mymensingh, is appointed to act, until further orders, as Subordinate Judge of Tippera.

Mymensingh.—No. 2749J. — 23rd March 1935.—Maulvi Mahmood Ali Khan is appointed to act, until further orders, as a munsif in the district of Mymensingh, to be ordinarily stationed at Bajitpur, *vice* Babu Dwarka Nath De, transferred.

Leave.

No. 2471J.—13th March 1935.—Babu Hem Chandra Sanyal, Subordinate Judge and Assistant Sessions Judge, is allowed leave for three months in extension of the leave already granted to him, viz., privilege-leave on full pay for one day, under the amendment to article 271 of the Civil Service Regulations, and commuted furlough, on medical certificate, on average salary for the remaining period, under articles 325A and 316A of the said Regulations.

NOTIFICATIONS.

Malda.—No. 2567J.—15th March 1935. — In exercise of the power conferred by section 65 of the Bengal Village Self-Government Act, 1919 (Bengal Act V of 1919), the Governor in Council is pleased to appoint the following members of the Kaligram union board within the Kharba police-station in the Sadar subdivision of the Malda district, to be, during their term of office as such members, members of the union bench within the jurisdiction of the said union board for the purposes of that section:—

Babu Gour Chandra Sarkar.
Munshi Nasiruddin Mandol.

Malda.—No. 2568J.—15th March 1935.—In exercise of the power conferred by section 73 of the Bengal Village Self-Government Act, 1919 (Bengal Act V of 1919), the Governor in Council is pleased to appoint the following members of the Kaligram union board within the Kharba police-station in the Sadar subdivision of the Malda district, to be, during their term of office as such members, members of the union court within the jurisdiction of the said union board for the purposes of that section:—

Babu Gour Chandra Sarkar.
Munshi Nasiruddin Mandol.

Calcutta.—No. 2604J.—18th March 1935.—In exercise of the power conferred by sub-section (*4*) of section 313 of the Code of Criminal Procedure, 1898 (Act V of 1898), the Governor in Council is pleased to exempt the following officers of the Income-Tax Department from liability to serve as jurors in the High Court of Judicature at Fort William in Bengal:—

Assistant Commissioner of Income-Tax, Calcutta.
Assistant Commissioner of Income-Tax, Headquarters.
Assistant Commissioner of Income-Tax, Presidency Range (stationed in Calcutta).
Personal Assistant to the Commissioner of Income-Tax, Bengal.
Income-Tax Officers in Calcutta.
Additional Income-Tax Officers with independent powers posted in Calcutta.
Superintendent of Surveys.

Dacca.—No. 2658J.—21st March 1935.—In exercise of the power conferred by section 65 of the Bengal Village Self-Government Act, 1919 (Bengal Act V of 1919), the Governor in Council is pleased to appoint Maulvi Muhammad Kaloo Mandal, a member of the Sripur union board within the Sripur police-station in the Sadar (North) subdivision of the Dacca district, to be, during his term of office as such member, a member of the union bench within the jurisdiction of the said union board for the purposes of that section.

Dacca.—No. 2659J.—21st March 1935.—In exercise of the power conferred by section 73 of the Bengal Village Self-Government Act, 1919 (Bengal Act V of 1919), the Governor in Council is pleased to appoint Maulvi Muhammad Kaloo Mandal, a member of the Sripur union board within the Sripur police-station in the Sadar (North) subdivision of the Dacca district, to be, during his term of office as such member, a member of the union court within the jurisdiction of the said union board for the purposes of that section.

Dacca.—No. 2670J.—21st March 1935.—In exercise of the power conferred by section 65 of the Bengal Village Self-Government Act, 1919 (Bengal Act V of 1919), the Governor in Council is pleased to appoint Munshi Golam Hossain Bhuyan, a member of the Duptara union board within the Araihazar police-station in the Narayanganj subdivision of the Dacca district, to be, during his term of office as such member, a member of the union bench within the jurisdiction of the said union board for the purposes of that section, *vice* Munshi Ashabuddin Mollah, deceased.

Dacca.—No. 2671J.—21st March 1935.—In exercise of the power conferred by section 73 of the Bengal Village Self-Government Act, 1919 (Bengal Act V of 1919), the Governor in Council is pleased to appoint Munshi Golam Hossain Bhuyan, a member of Duptara union board within the Araihazar police-station in the Narayanganj subdivision of the Dacca district, to be, during his term of office as such member, a member of the union court within the jurisdiction of the said union board for the purposes of that section, *vice* Munshi Ashabuddin Mollah, deceased.

Dacca.—No. 2673J.—21st March 1935.—In exercise of the power conferred by section 65 of the Bengal Village Self-Government Act, 1919 (Bengal Act V of 1919), the Governor in Council is pleased to appoint Munshi Munsurali Meah, a member of the Kashipur union board within the Fatulla police-station in the Narayanganj subdivision of the Dacca district, to be, during his term of office as such member, a member of the union bench within the jurisdiction of the said union board for the purposes of that section.

Dacca.—No. 2674J.—21st March 1935.—In exercise of the power conferred by section 73 of the Bengal Village Self-Government Act, 1919 (Bengal Act V of 1919), the Governor in Council is pleased to appoint Munshi Munsurali Meah, a member of the Kashipur union board within the Fatulla police-station in the Narayanganj subdivision of the Dacca district, to be, during his term of office as such member, a member of the union court within the jurisdiction of the said union board for the purposes of that section.

Faridpur.—No. 2678J.—22nd March 1935.—In exercise of the power conferred by section 65 of the Bengal Village Self-Government Act, 1919 (Bengal Act V of 1919), the Governor in Council is pleased to appoint the following members of the Baliakandi union board within the Baliakandi police-station in the Goalundo subdivision of the Faridpur district, to be, during their term of office as such members, members of the union bench within the jurisdiction of the said union board for the purposes of that section:—

Munshi Raham Ali Biswas.
Babu Akshoy Kumar Chaudhuri.

Faridpur.—No. 2679J.—22nd March 1935.—In exercise of the power conferred by section 73 of the Bengal Village Self-Government Act, 1919 (Bengal Act V of 1919), the Governor in Council is pleased to appoint the following members of the Baliakandi union board within the Baliakandi police-station in the Goalundo subdivision of the Faridpur district, to be, during their term of office as such members, members of the union court within the jurisdiction of the said union board for the purposes of that section:—

Munshi Raham Ali Biswas.
Babu Akshoy Kumar Chaudhuri.

T. ROXBURGH,
Secy. to the Govt. of Bengal (offg.)

LOCAL SELF-GOVERNMENT DEPARTMENT.

NOTIFICATIONS.

Minister-in-charge: The Hon'ble Sir Bijoy Prasad Singh Roy, Kt.

Bakarganj.—No. 2068L.S.-G.—18th March 1935.—In exercise of the powers conferred by clauses (*a*) and (*b*) of section 31 of the Cattle Trespass Act, 1871 (Act I of 1871), and in modification of order contained in clauses (*a*) and (*b*) of notification No. 317½T.M., dated the 16th August 1913, and in clauses (*a*) and (*b*) of notification No. 1428L.S.-G., dated the 18th May 1914, the Government of Bengal (Ministry of Local Self-Government) are pleased to—

(*a*) transfer to the union boards, named below, in the district of Bakarganj, all the functions of the Magistrate of that district, under Chapters II and III of the said Act I of 1871, in respect of all pounds within the local areas subject to the jurisdiction of the said union boards, and

(*b*) direct that the whole of the surplus accruing under section 18 of the said Act I of 1871, in the areas within the jurisdiction of the said union boards in the district of Bakarganj, named below, shall be placed to the credit of the union funds constituted for the said union boards:—

Patuakhali subdivision.

Barguna police-station.

Keorabunia union board.
Burirchar union board.

Baufal police-station.

Naomala union board.
Kanakdia union board.

Mirzaganj police-station.

Mirzaganj union board.

Patuakhali police-station.

Bhuria union board.

No. 2070L.S.-G.—18th March 1935. — In exercise of the power conferred by section 12 of the Bengal Motor Vehicles Tax Act, 1932 (Bengal Act I of 1932), the Government of Bengal (Ministry of Local Self-Government) are pleased to make the following amendment in the rules published under notification No. 5859L.S.-G., dated the 31st October 1933, at pages 1575-1593 of Part I of the *Calcutta Gazette*, dated the 9th November 1933:—

Amendment.

At the end of rule 30 of the said rules *add* the following:—

(*t*) motor lorry belonging to the Chairman, Station Committee, Chittagong, and solely used for sanitation purposes.

No. 2072L.S.-G.—18th March 1935.—In exercise of the power conferred by section 16 of the Bengal Motor Vehicles Tax Act, 1932 (Bengal Act I of 1932), the Government of Bengal (Ministry of Local Self-Government) are pleased to exempt the motor lorry belonging to the Chairman, Station Committee, Chittagong, and solely used for sanitation purposes from payment of tax under the said Act, subject to the provisions of rule 19.

Jessore.—No. 2105M.—19th March 1935.—In exercise of the power conferred by section 46 (*1*) of the Bengal Municipal Act, 1932 (Bengal Act XV of 1932), the Government of Bengal (Ministry of Local Self-Government) are pleased to appoint Babu Jitendra Nath Mukherji to be Chairman of the Mohespur Municipality, in the district of Jessore.

Calcutta.—No. 2144M.—21st March 1935.—Whereas the Corporation of Calcutta have, by a resolution passed at their meeting held on the 21st December 1934, made a recommendation, under clause (*xviii*) of section 477 of the Calcutta Municipal Act, 1923 (Bengal Act III of 1923), that the maintenance of five Baby Clinic Centres of the Child Welfare Division of the Indian Red Cross Society, towards which the Corporation propose to make a grant out of their fund, is a matter likely to promote the public health:

Now, therefore, the Government of Bengal (Ministry of Local Self-Government), in exercise of the power conferred by the said clause, are pleased to declare that the said matter is one which will promote the public health within the meaning of the said clause.

No. 2207M.—26th March 1935.—In exercise of the power conferred by section 20 of the Garden Reach Municipality Act, 1932 (Bengal Act III of 1932), the Government of Bengal (Ministry of Local Self-Government) are pleased to direct that for giving effect to the purposes of the said Act, the following four Councillors of the Corporation of Calcutta elected from their Garden Reach constituency (Ward No. 26) shall cease to be Councillors of the said Corporation with effect from the 1st April 1935, namely:—

(1) Dr. Haripada Neogi.
(2) Haji Hafiz Aminuddin.
(3) Mr. Unsud Dowla.
(4) Mr. H. Wallace.

ERRATUM.

Minister-in-charge: The Hon'ble Sir Bijoy Prasad Singh Roy, Kt.

No. 2064M.—15th March 1935.—In Government notification No. 7143M., dated the 19th December 1933, published at page 1908 of Part I of the *Calcutta Gazette*, dated the 28th December 1933, make the following corrections:—

In column 1 of the table, against "Shahpore" *for* "II" *read* "III", against "Etalghata" *for* "III" *read* "II," against "Sodepur" *for* "IV" *read* "VI", against "Barisa" *for* "V" *read* "IV", against "Sarsoona" *for* "VI" *read* "V".

CALCUTTA, THE 26TH MARCH 1935.

RESOLUTION—No. 2190M.

Minister-in-charge: The Hon'ble Sir Bijoy Prasad Singh Roy, Kt.

By Government resolution No. 836M., dated the 26th February 1934, the Subdivisional Officer of Serampore was appointed under section 550 of the Bengal Municipal Act, 1932, to be in charge of the Assessment and Collection Departments of the Kotrung Municipality until the end of the year 1934-35. As the quinquennial revision of assessment of the municipality has already been undertaken by the Subdivisional Officer, Government consider it desirable that the Subdivisional Officer should remain in charge of the two departments for three months more so that he may complete the assessment after considering applications for review of assessment received after the issue of the first notice of demand.

2. In view of the above consideration Government called upon the Municipal Commissioners, under section 550, sub-section (*1*) of the Bengal Municipal Act, to show cause why the period of appointment of the Subdivisional Officer should not be extended by another period of three months. In reply, the Municipal Commissioners have agreed to the action proposed to be taken by Government without prejudice to the competency of the present Municipal Board to take up the review work in a fair and impartial manner.

3. In exercise of the power conferred by section 550, sub-section (*2*) of the Bengal Municipal Act, read with section 22 of the Bengal General Clauses Act, the Government of Bengal (Ministry of Local Self-Government) are accordingly pleased to appoint the Subdivisional Officer of Serampore to be in charge of the Assessment and Collection Departments of the municipality for a further period of three months with effect from the 1st April 1935.

4. Ordered that this resolution be published in the *Calcutta Gazette*.

By order of the Govt. of Bengal
(Ministry of Local Self-Govt.),

G. S. DUTT,
Secy. to the Govt. of Bengal.

Medical.

Minister-in-charge: The Hon'ble Sir Bijoy Prasad Singh Roy, Kt.

Calcutta. — No. 1138Medl. — 14th March 1935.—Dr. W. A. Browne, I.M.D., is appointed to act, until further orders, as Second Resident Medical Officer, Presidency General Hospital, Calcutta, with effect from the 8th August 1934.

Calcutta.—No. 1171Medl.—19th March 1935.—In exercise of the power conferred by section 28, sub-section (*1*) of the Indian Lunacy Act, 1912 (IV of 1912), the Government of Bengal (Ministry of Local Self-Government) are pleased to appoint Lieut. Saileshwar Singh Roy, M.L.C., as a non-official visitor of the Mental Observation Ward, Bhowanipore, Calcutta, in place of Rai Satyendra Nath Banerjee Bahadur, whose term expired.

Calcutta-Howrah. — No. 1173Medl.—19th March 1935.—Dr. Jatindra Mohan Mukherji, Registrar, Medical College Hospitals, Calcutta, on relief, is posted to the Uluberia subdivision and dispensary, *vice* temporary Assistant Surgeon Dr. Jitendra Mohan Chakrabarty.

2. Notification No. 918Medl., dated the 26th February 1935, posting Dr. Jyoti Prosad Mitra, 1st Resident Assistant Surgeon, Howrah General Hospital, to the Uluberia subdivision and dispensary, is hereby cancelled.

Bankura.—No. 1188Medl.—21st March 1935.—Dr. Bisweswar Chakravarty, Civil Surgeon, on the expiry of his leave, is posted as Civil Surgeon, Bankura, *vice* Dr. Bidyananda Datta.

Bankura-Faridpur.—No. 1189Medl.—21st March 1935.—Dr. Bidyananda Datta, officiating Civil Surgeon, Bankura, on relief, is posted to Faridpur, as officiating Civil Surgeon, *vice* Dr. Rajendra Chandra Barory, due to retire on 29th March 1935.

NOTIFICATION.

Minister-in-charge: The Hon'ble Sir Bijoy Prasad Singh Roy, Kt.

Dinajpur.—No. 1210Medl. — 22nd March 1935.—The appointment of the following gentlemen as members of the Committee for the Management of the Balurghat Homeopathic Charitable Dispensary in the district of Dinajpur is notified for general information:—

The Subdivisional Officer (*ex-officio*).
Babu Nalini Kanta Adhikary, B.L.
Babu Manmatha Kumar Roy, M.A., B.L.
The Senior Munsif, Balurghat (*ex-officio*).
The Circle Officer, Balurghat (*ex-officio*).
Babu Protap Chandra Gupta, B.L.
Maulvi Shah Abdur Rouff Chowdhury, B.L.

G. S. DUTT,
Secy. to the Govt. of Bengal.

Public Health.

NOTIFICATION.

Minister-in-charge: The Hon'ble Sir Bijoy Prasad Singh Roy, Kt.

Faridpur.—No. 720P.H.—23rd March 1935.—Under rule 7 of the Local Authorities Loans Rules, 1915, as subsequently amended, it is hereby notified for general information that the Government of Bengal (Ministry of Public Health) intend to sanction the following application from the Chairman of the Faridpur Municipality for a loan of Rs. 10,767 from Government, bearing interest at the rate of 4 per cent. per annum and repayable in thirty equal yearly instalments of Rs. 622-10-6 each for the extension of the Faridpur Municipal waterworks scheme, unless good reasons are shown to the contrary within one month from the date of publication of this notification.

Application from the Commissioners of the Faridpur Municipality for a loan of Rs. 10,767 only.

The work or works for which the loan is required and the estimate of the cost thereof.	The amount which it is proposed to borrow.	The fund or funds on the security of which it is proposed to borrow.	The law or laws under which the said fund or funds is or are levied, received or held.	Receipt of loan. (a) The period for which the loan is required.	(b) The rate of interest at which it is proposed to borrow.	(c) The number of instalments in which it is proposed that the loan should be taken.	(d) The amount of each instalment.	(e) The date proposed for receiving each.	Repayment of loan. (f) The number of instalments in which the loan is repayable and the date of payment thereof.	(g) Amount of each instalment.	Financial position of the local body. Revenue (details of the preceding 3 years). Sources from which the revenue is derived.	Amount for— 1931-32.	1932-33.	1933-34.	Expenditure (details of the preceding 3 years). Objects on which the expenditure is incurred.	Amount for— 1931-32.	1932-33.	1933-34.	The normal surplus which may be expected in future, i.e., difference between the average ordinary income and expenditure calculated on the figures in columns 13 to 15 and 17 to 19, respectively.
1	2	3	4	5	6	7	8	9	10	11	12	13	14	15	16	17	18	19	20
												Rs.	Rs.	Rs.		Rs.	Rs.	Rs.	
Faridpur. Water-works.		Funds.	1932.	years.	per annum.	instalment.	(In full).	1935.	commencing from the 1st May 1936.		(a) Municipal rates and taxes—				(1) General administration and collection charges.	5,800	5,630	5,632	
											(1) Tax on holdings and persons.	16,786	17,487	15,352	(2) Public safety	4,824	3,944	2,877	
											(2) Water-rate ..	10,655	11,998	10,594	(3) Public health and convenience (excluding capital outlay on water-supply or drainage, the cost of constructing new roads and buildings, and special expenditure met out of non-recurring grants or donations)—				
											(3) Latrine fees ..	15,332	18,850	16,746					
											(4) Lighting rate ..	..	..	..	(i) Water-supply (establishment and repairs).	10,190	7,117	6,506	
											(5) Tax on animals and vehicles.	706	677	701					
											(6) Tax on professions and trades.	391	454	483	(ii) Drainage (establishment and repairs) ..	149	306	89	
											(b) Realizations under special Acts.	661	671	907	(iii) Conservancy, etc. (heads 3 to 13 in account form No. 1).	19,929	22,302	17,790	
											(c) Revenue derived from municipal property and powers apart from taxation (excluding sale-proceeds of land).	1,901	2,432	1,858	(iv) Public Works (establishment, repairs and tools and plant).	7,200	8,994	6,546	

Extension of the Municipal Bengal Act XV of Thirty-four, 4 per cent. One Rs. 10,767. 1st May Thirty yearly equal instalments on 1st May each year Rs. 622-10-6.

(d) Grants and contributions (recurring).	440	440	440	(4) Public instruction	2,292	2,322	1,570		
				(5) Contributions (recurring) .. .	120	50	..		
(e) Miscellaneous (details of individual items exceeding Rs. 1,000 to be furnished in the remarks column).	374	903	9,257	(6) Miscellaneous (individual items exceeding Rs. 1,000 to be detailed in the remarks column).	9,476	6,189	6,253		
				(7) Repayment of loan	636	663	702		
Total ordinary income ..	47,246	53,912	56,338	(X) Total Ordinary Expenditure ..	60,606	57,517	47,965		
(f) Extraordinary and debt	18,347	8,480	1,919	(8) Extraordinary and debt, exclusive of repayment of loans.	1,133	2,290	10,393		
(g) Receipts of abnormal character.	..	..	..	(9) (i) Capital outlay on—					
(1) Sale-proceeds of land ..	..	..	..	(a) Water-supply	16,881	3,848	1,111		
(2) Grants and contributions (non-recurring or special).	250	375	1,360	(b) Drainage	..	46	..		
(3) Other items ..	896	808	927	(c) Buildings and roads (new works) ..	..	..	..		
				(ii) Other expenditure from special grants or donations.	250	375	1,360		
				(Y) Total (i) and (ii)	17,131	4,269	2,471		
				Deduct—Expenditure out of loans, special grants or donations (*vide* Account No. 72)	250	375	1,360		
				Net capital expenditure met out of revenue	16,881	3,894	1,111		
				Total of (X), (8) and (Y)	78,620	63,701	59,469		
				Closing balance—					
				Special funds—					
				(a) Water	3,343	4,112	4,104		
				(b) Lighting	..	..	..		
				(c) Latrine	−629	−273	913		
Total ..	66,739	63,575	60,544	Revenue Fund ..	−770	−2,021	−2,124		
Opening balance ..	13,825	1,944	1,818						
Grand Total ..	80,564	65,519	62,362	Grand Total ..	80,564	65,519	62,362		

—Rs. 2,864.

In addition to the details required on the reverse, clear information should be given below under the following heads:—

(*a*) If the ordinary surplus is insufficient to meet the charges of the proposed loan, the particular steps which the municipality has taken, or has agreed to take, in order to make good the deficiency.

(*a*) The loan with interest will be paid from the water-rates.

(*b*) The reserve of taxation or other possible means of increase in the revenues of the municipality. The rates at which each of the taxes mentioned in column 12 on the reverse are levied, other than tax on persons, should be stated here.

(*b*) Followings are the rates at which each of the taxes mentioned in column 12 on the reverse:—

(1) Tax on holdings at 7¼ per cent. on the annual value of holdings.

(2) Conservancy rate at 7 per cent. on the annual value of holdings.

(3) Water-rate at 5 per cent. and 4 per cent. on the annual value of holdings.

(*c*) A statement of all outstanding loans specifying, in respect of each loan, the date when taken, the purpose (very briefly), the amount, the annual charges involved, and the amount still payable.

(*c*) Statement showing the outstanding loans:—

Particulars of outstanding loans.	Date of receipt.	Terms of loan.	Annual charge including the interest.	Balance on 31st March 1934.
			Rs. a. p	Rs. a. p
Rupees 3,667 for the construction of the mothers' sheds.	5th February 1923.	30 years	295 8 2	3,054 5 3
Rupees 40,000 for the Faridpur Water-works.	1st February 1930.	30 „	2,828 10 4	37,696 0 0

(*d*) Any explanations in regard to receipts and expenditure to show the true financial position of the municipality when such position is otherwise than the ordinary surplus would indicate.

H. R. WILKINSON,
Secy. to the Govt. of Bengal.

Orders by the Director of Public Health, Bengal.

No. 3990A.—23rd March 1935.—In modification of Public Health Department notification No. 2927A., dated the 1st March 1935, Babu Tarak Nath Sen Gupta, Assistant Analyst, Public Health Laboratory, Calcutta, is allowed an extension of leave on average pay for a period of fourteen days, with effect from the 1st March 1935, in continuation of the leave previously granted to him under article 81(*b*) (*ii*) of the Fundamental Rules.

No. 3550A. — 14th March 1935. — Babu Narendra Krishna Chattarji, Assistant Analyst, Calcutta Public Health Laboratory, is allowed an extension of leave on average pay for a period of one month with effect from the 1st March 1935, in continuation of the leave previously granted to him under article 81 (*b*) (*ii*) of the Fundamental Rules.

R. B. KHAMBATA,
Director of Public Health, Bengal.

EDUCATION DEPARTMENT.

NOTIFICATIONS.

Darjeeling.—No. 1313Edn. — 23rd March 1935.—Mrs. V. M. S. Cousins is appointed temporarily to act as Mistress of Educational Theory in the training classes of the Dow Hill Girls' School, Kurseong, with effect from the date on which she joins the appointment, *vice* Miss S. A. Webb, on deputation, or until further orders.

2. This cancels the orders in notification No. 2888Edn., dated the 17th November 1934.

Minister-in-charge: The Hon'ble Khan Bahadur M. Azizul Haque.

No. 1063Edn.—14th March 1935.—In exercise of the power conferred by rule 4 of the All-India Services (Transferred Departments) Replacement Rules, and in continuation of notification No. 1588Edn., dated the 27th June 1934, the Government of Bengal (Ministry of Education) are pleased to abolish, with effect from the dates mentioned, the following further posts borne on the provincial cadre of the Indian Educational Service, namely:—

Men's Branch.

Sixteen posts of the second class (as defined in the aforesaid rules), with effect from 1st April 1934.

Women's Branch.

One post of the second class, with effect from 1st April 1934, and one post of the second class, with effect from 19th April 1934.

No. 1082Edn. — 14th March 1935.—The following persons are appointed to the grade I of the Bengal Educational Service with effect from the dates mentioned against each:—

Men's Branch.

Mr. Jiban Mohan Basu—1st April 1934.

Mr. Prafulla Chandra Ghosh—1st April 1934.

Khan Bahadur Maulvi Muhammad Musa—1st April 1934.

Rai Kshitish Chandra Ray Bahadur—1st April 1934.

Rai Sahib Monoranjan Mitra—1st April 1934.

Khan Bahadur Mr. Md. Maula Baksh—1st April 1934.

Khan Bahadur Maulvi Tasadduq Ahmad—1st April 1934.

Khan Bahadur Maulvi Abul Hashem Khan Chaudhury—1st April 1934.

Babu Guru Bandhu Bhattacharji—1st April 1934.

Mr. Jitendra Mohan Sen—1st April 1934.

Khan Sahib Maulvi A. M. Muhammad Asad—1st April 1934.

Mr. Nagendra Nath Sen—1st April 1934.

Dr. Jyotirmoy Ghose—1st April 1934.

Dr. M. Qudrat-i-Khuda—1st April 1934.

Mr. Monoranjan Sen Gupta—1st April 1934.

Dr. Jogish Chandra Sinha—1st April 1934.

Women's Branch.

Miss Lilabati Ghosh—19th April 1934.

Miss Violet Alphonso—1st April 1934.

Mrs. Tatini Das—1st April 1934.

Calcutta.—No. 1269Edn. — 22nd March 1935.—Shams-ul-Ulama Dr. M. Hidayet Hussain, Khan Bahadur, late officiating Principal, Calcutta Madrasah, is granted leave for the period from the 8th August 1934 to the 31st March 1935 (both days inclusive), viz., leave on average pay for four months, under rule 81 (*b*) (*ii*) of the Fundamental Rules, and leave on half average pay for the remaining period, under rule 81 (*d*) of the same Rules.

Calcutta-Presidency Divn.—No. 1278Edn.—22nd March 1935.—Miss Prabhash Nalini Das, Assistant Mistress, Hindu Female Training School, Calcutta, is appointed to act in the Bengal Educational Service (Women's Branch) as Assistant Inspectress of Schools, Presidency Division (Nadia and Murshidabad), with effect from the date on which she joins the appointment, *vice* Miss Mrinalini Bose, on leave, or until further orders.

Tippera.—No. 1291Edn.—22nd March 1935.—Miss Rama Dutta, Assistant Head Mistress, Faizunnessa Girls' High School, Comilla, acted in the Bengal Educational Service (Women's Branch) as Head Mistress of the school for the period from the 12th November 1934 to the 1st February 1935 (both days inclusive), during the absence, on leave, of Miss Suhashini Biswas.

Calcutta.—No. 1316Edn.—23rd March 1935.—Babu Nani Gopal Chakrabarty, Demonstrator in Chemistry, Presidency College, Calcutta, in the Subordinate Educational Service, acted in the Bengal Educational Service as Demonstrator in Chemistry of the College for the period from 20th August 1934 to 6th October 1934, *vice* Babu Ashutosh Maitra, on leave.

Registration.

NOTIFICATIONS.

Minister-in-charge: The Hon'ble Khan Bahadur M. Azizul Haque.

Midnapore. — No. 343Regn.—21st March 1935.—It is notified for general information that the Government of Bengal (Ministry of Education) are pleased to sanction the retention, for a further period of one year with effect from the 1st February 1935, of the office of the Second Joint Sub-Registrar at Midnapore, in the district of Midnapore.

Mymensingh.—No. 353Regn.—21st March 1935.—It is notified for general information that the Government of Bengal (Ministry of Education) are pleased to sanction the retention, for a further period of one year with effect from the 1st January 1935, of the office of the Joint Sub-Registrar of Kalihati at Lohani Sagardighi, in the district of Mymensingh, the office being in charge of the local Muhammadan Marriage Registrar and Kazi as the *ex-officio* Sub-Registrar.

Faridpur. — No. 355Regn. — 21st March 1935.—Maulvi Dilwar Ali Khan, District Sub-Registrar of Faridpur, is allowed leave on average pay for fourteen days, with effect from the 16th March 1935, under rule 86 (*a*) (*i*) of the Fundamental Rules.

Chittagong.—No. 358Regn. — 23rd March 1935.—Maulvi Abdul Latif Khan, District Sub-Registrar of Chittagong, is allowed leave on average pay for three days, under rule 86 (*b*) of the Fundamental Rules, in extension of the leave already granted to him.

Rajshahi.—No. 363Regn.—25th March 1935. —Maulvi Ansaruddin, District Sub-Registrar of Rajshahi, is allowed leave on average pay for one month, with effect from the 1st April 1935, or any subsequent date on which he avails himself of it, under rule 81 (*b*) (*ii*) of the Fundamental Rules.

H. R. WILKINSON,
Secy. to the Govt. of Bengal.

Orders by the Director of Public Instruction, Bengal.

Bengal Educational Service.

Birbhum.—No. 16B.—11th March 1935.—Babu Kshirode Chandra Sen, Headmaster, Birbhum Zilla School, in the Bengal Educational Service, is declared, in terms of rules 81 (*b*) (*ii*) and 82 (*b*) of the Fundamental Rules, to have been on leave on average pay for ten days from 17th January 1935.

2. He was permitted to suffix to his leave Sunday, the 27th January 1935, provided the conditions prescribed in Subsidiary Rules 206 to 208 were fulfilled.

Darjeeling.—No. 17B.—12th March 1935. —Mr. Fazlur Rahman, District Inspector of Schools, Darjeeling, in the Bengal Educational Service, is granted leave on average pay for three days, with effect from 16th April 1935, under Fundamental Rule 81 (*b*) (*ii*).

2. He is permitted to prefix to his leave the gazetted holidays on the 13th and 15th and Sunday, the 14th April 1935, and to suffix to it the Easter holidays, extending from 19th to 22nd April 1935, provided the conditions prescribed in Subsidiary Rules 206 to 208 are fulfilled.

Nadia - Murshidabad. — No. 18B.—13th March 1935.—Miss Mrinalini Bose, Assistant Inspectress of Schools, Presidency Division (Nadia and Murshidabad), in the Bengal Educational Service (Women's Branch), is granted, under the proviso to Fundamental Rule 81 (*b*) (*ii*), leave on average pay, on medical certificate, for four months, with effect from the 19th February 1935.

J. M. BOTTOMLEY,
Director of Public Instrn., Bengal.

Orders by the Inspector-General of Registration, Bengal.

Mymensingh.—No. 105.—14th March 1935. —Babu Jogendra Chandra Nath, Sub-Registrar of Iswarganj, in the district of Mymensingh, is allowed leave on average pay for twenty days, under rule 81 (*b*) (*ii*) of the Fundamental Rules, with effect from the 5th March 1935.

Dacca. — No. 106. — 14th March 1935.— Maulvi Muhammad Bazlur Rahman, Sub-Registrar of Monohardi, in the district of Dacca, is allowed leave on average pay for two months, under rule 81 (*b*) (*ii*) of the Fundamental Rules, with effect from the date on which he may be relieved.

Dacca.—No. 107.—14th March 1935.— Maulvi Saiyid Habibar Rahman, Sub-Registrar attached to Dacca, is appointed to act as Sub-Registrar of Monohardi in the same district, with effect from the date on which he joins the appointment, during the absence, on leave, of Maulvi Muhammad Bazlur Rahman, or until further orders.

Chittagong.—No. 108.—14th March 1935. —Maulvi Mahfuzal Haq, Joint Sub-Registrar of Mirsarai at Zorwarganj, in the district of Chittagong, is allowed leave on average pay for four days, under rule 81 (*b*) (*ii*) of the Fundamental Rules, with effect from the 18th March 1935.

Noakhali.—No. 109.—14th March 1935.— Maulvi Habibur Rahman, No. I, Sub-Registrar of Raipur, in the district of Noakhali, is allowed leave on average pay for two days, under rule 81 (*b*) (*ii*) of the Fundamental Rules, with effect from the 18th March 1935.

24-Parganas.—No. 110.—14th March 1935. —Babu Ramesh Chandra Das Gupta, Sub-Registrar attached to Alipore, under orders of transfer to Kakdip, in the district of the 24-Parganas, is allowed leave on average pay for two days, under rule 81 (*b*) (*ii*) of the Fundamental Rules, with effect from the 18th March 1935.

Howrah.—No. 113.—15th March 1935. — Babu Panchanan Mukherji, Sub-Registrar of Syampur, in the district of Howrah, is allowed leave on average pay for three months, under rule 81 (*b*) (*ii*) of the Fundamental Rules, with effect from the date on which he may be relieved.

Howrah.—No. 114.—15th March 1935. — Maulvi Abdul Wajid, No. II, Sub-Registrar attached to Howrah, is appointed to act as Sub-Registrar of Syampur in the same district, with effect from the date on which he joins the appointment, during the absence, on leave, of Babu Panchanan Mukherji, Sub-Registrar, or until further orders.

Rangpur.—No. 115.—15th March 1935. — Babu Pramatha Bhusan Mukherji, Sub-Registrar of Lalmonirhat, in the district of Rangpur, is allowed leave on average pay for two months, under rule 81 (*b*) (*ii*) of the Fundamental Rules, with effect from the date on which he may be relieved.

Howrah-Rangpur.—No. 116.—15th March 1935.—Babu Nripendra Mohan Bakshi, Sub-Registrar attached to Howrah, is appointed to act as Sub-Registrar of Lalmonirhat, in the district of Rangpur, with effect from the date on which he joins the appointment, during the absence, on leave, of Babu Pramatha Bhusan Mukherji, Sub-Registrar, or until further orders.

Murshidabad-24-Parganas. — No. 117. — 15th March 1935. — Maulvi Muhammad Mazharul Haq, Sub-Registrar attached to Berhampore, Murshidabad, is appointed to act as Joint Sub-Registrar of Kakdip at Ghateswar, in the district of the 24-Parganas, with effect from the date on which he joins the appointment, during the absence, on leave, of Maulvi Muhammad Reazuddin, Sub-Registrar, or until further orders.

This cancels this department notification No. 100, dated the 9th March 1935, deputing Babu Narmada Ranjan Das Gupta, Sub-Registrar attached to Berhampore, Murshidabad, to Ghateswar.

Midnapore.—No. 118.—15th March 1935.—Babu Jamini Kanta Bakshi, Sub-Registrar of Anandapur, in the district of Midnapore, is allowed leave on average pay for twenty-six days, under rule 81 (*b*) (*ii*) of the Fundamental Rules, in extension of the leave granted in this department notification No. 17, dated the 24th January 1935.

Noakhali.—No. 119.—15th March 1935. — Maulvi Farid Bakht Mazumdar, Sub-Registrar of Sonaimuri, in the district of Noakhali, is allowed leave on average pay for two days, under rule 81 (*b*) (*ii*) of the Fundamental Rules, with effect from the 18th March 1935.

Midnapore.—No. 120.—15th March 1935.— Babu Jaydeb Banarji, officiating Sub-Registrar of Chandrakona, in the district of Midnapore, is allowed leave on average pay for two days, under rule 81 (*b*) (*ii*) of the Fundamental Rules, with effect from the 18th March 1935.

Faridpur.—No. 121.—15th March 1935. — Maulvi Md. Yusuf, Sub-Registrar of Muksudpur, in the district of Faridpur, is allowed leave for one month, viz., leave on average pay for twenty days, under rule 81 (*b*) (*ii*) of the Fundamental Rules, in extension of the leave granted to him in this department notification No. 71, dated the 22nd February 1935, and extraordinary leave without allowance, under rule 85 (*a*) of the Fundamental Rules, for the remaining period.

Bankura.—No. 122.—15th March 1935. — Babu Surendra Chandra Khan, Sub-Registrar of Onda, in the district of Bankura, is allowed leave on average pay for one month, under rule 81 (*b*) (*ii*) of the Fundamental Rules, with effect from the 1st March 1935.

Bankura.—No. 123.—15th March 1935. — Babu Rama Prosad Mukharji, Sub-Registrar attached to Bankura, is appointed to act as Sub-Registrar of Onda in the same district, with effect from the 1st March 1935, during the absence, on leave, of Babu Surendra Chandra Khan, Sub-Registrar, or until further orders.

Midnapore.—No. 124.—21st March 1935. —Babu Jamini Kanta Bakshi, Sub-Registrar of Anandpur, in the district of Midnapore, on leave, is appointed to be Sub-Registrar of Jhargram in the same district.

Midnapore.—No. 125.—21st March 1935.— Babu Shashi Bhusan Datta, Sub-Registrar of Jhargram, in the district of Midnapore, is appointed to be Sub-Registrar of Anandpur in the same district.

Jessore. — No. 126.—21st March 1935.— Maulvi Afiluddin Ahmed, Sub-Registrar attached to Jessore, officiating at Muhammadpur in the same district, is allowed leave on average pay for one month, under rule 81 (*b*) (*ii*) of the Fundamental Rules, with effect from the date on which he may be relieved.

Tippera. — No. 127.—21st March 1935.— Babu Dinesh Chandra Chanda, Sub-Registrar of Chaudagram, in the district of Tippera, is allowed leave on average pay for one month and seven days, under rule 81 (*b*) (*ii*) of the Fundamental Rules, in extension of the leave granted to him in this department notification No. 63, dated the 21st February 1935.

Khulna. — No. 128.—21st March 1935.—Babu Sasadhar Pramanik, Sub-Registrar of Kachua, in the district of Khulna, is allowed leave on average pay for one month, under rule 81 (*b*) (*ii*) of the Fundamental Rules, with effect from the date on which he may be relieved.

Dacca. — No. 129.—22nd March 1935.—Maulvi Chaudhuri Barhanuddin Ahmad Siddiq, Sub-Registrar of Kaliganj, in the district of Dacca, is allowed leave on average pay for sixteen days, under rule 81 (*b*) (*ii*) of the Fundamental Rules, with effect from the 27th February 1935.

Dacca. — No. 130.—22nd March 1935.—Maulvi Chaudhuri Wahiduddin Ahmad Siddiqui, Sub-Registrar attached to Dacca, is appointed to act as Sub-Registrar of Kaliganj in the same district, with effect from the 27th February 1935, during the absence, on leave, of Maulvi Chaudhuri Barhanuddin Ahmad Siddiq, Sub-Registrar, or until further orders.

Murshidabad.—No. 131.—22nd March 1935.—Maulvi Syed Zurghamuddin Hyder Hasony, Sub-Registrar of Jangipur, in the district of Murshidabad, is allowed leave on average pay for one month, under rule 81 (*b*) (*ii*) of the Fundamental Rules, with effect from the 1st April 1935, or any subsequent date on which he may be relieved.

Jessore. — No. 132.—22nd March 1935.—Babu Mohini Ranjan Bhattacharji, Sub-Registrar of Keshabpur, in the district of Jessore, is allowed leave on average pay for two months, under rule 81 (*b*) (*ii*) of the Fundamental Rules, in extension of the leave granted to him in this department notification No. 574, dated the 28th November 1934.

S. AHMED,
Inspector-General of Regn., Bengal.

FINANCE DEPARTMENT.

Finance.

NOTIFICATION.

No. 1756F.—11th March 1935.—In exercise of the powers conferred by rule 103 (*a*) of the Fundamental Rules and rules 41, 42 and 44 of the Civil Services (Classification, Control and Appeal) Rules, the Governor in Council and acting with Ministers is pleased to make the following amendments to the Subsidiary Rules made under F. R. 103 (*a*), namely:—

Amendments.

Page 170—S. R. 275.—The words "half average pay" and "average pay" shall, respectively, be substituted for the words "half pay" and "full pay" wherever they occur in S. R. 275 and the "Exception" thereto.

At the end of the "Exception" to S. R. 275 the following shall be inserted:—

If a part only of the vacation has been taken in any year, the period of leave on average pay admissible under the above proviso will be reduced by a fraction of a month equal to the proportion which the part of the vacation taken bears to the full period of the vacation.

Audit.

NOTIFICATION.

No. 2142F. — 18th March 1935. — Rai Debendra Nath Bhattacharjea Bahadur, Assistant Secretary to the Government of Bengal in the Finance Department, is appointed to act, until further orders, as Deputy Secretary to the Government of Bengal in the Finance, Commerce and Marine Departments.

ADDENDA AND CORRIGENDA.

No. 2243F. — 23rd March 1935. — The following corrections, which have been authorised, are published for general information:—

Fundamental and Subsidiary Rules, 1st Edition (Reprint).

Page 16—F. R. 13 (Old).—Delete paragraphs 1 and 2 of the Audit Instruction under this rule.

Page 115—F. R. 59 (Old).—Delete the Audit Instruction under this rule.

D. GLADDING,
Secy. to the Govt. of Bengal.

COMMERCE DEPARTMENT.

NOTIFICATIONS.

No. 3376Com.—16th March 1935.—Mr. M. Moore, Inspector of Boilers, Bengal, attached to the head office at Calcutta, is transferred to the branch office at Sitarampore, with effect from the 5th April 1935, or any subsequent date on which he may take over charge from Mr. W. Garner, granted leave.

No. 3379Com.—16th March 1935.—Mr. A. M. Gavin, Inspector of Boilers, Bengal, attached to the head office at Calcutta, is transferred to the branch office at Jharia, with effect from the 1st April 1935, or any subsequent date on which he may be relieved of his duties.

D. GLADDING,
Secy. to the Govt. of Bengal.

MARINE DEPARTMENT.

NOTIFICATION.

No. 10Mne. — 23rd March 1935. — The following by-laws made by the Commissioners for the Port of Calcutta under sub-section (*1*) of section 126 and section 127 of the Calcutta Port Act, 1890 (Bengal Act III of 1890), to regulate the discharge of Ethyl Fluid in the Port of Calcutta, subject to the confirmation of the Local Government, is published for general information, as required by sub-section (*4*) of the said section 126.

2. The by-laws will be taken into consideration on the expiry of a month after the first publication of this notification in the *Calcutta Gazette*, and any suggestion or objection with regard thereto received by the undersigned within that period will be considered:—

Draft by-laws.

1. Ethyl Fluid may be landed at the Commissioners' Docks, Jetties and at the Petroleum Wharf at Budge Budge.

2. No consignment shall be landed at the Docks or Garden Reach Jetties without the previous consent in writing of the Dock Superintendent, at the Calcutta Jetties without the previous consent in writing of the Jetties Superintendent, or at the Budge Budge Petroleum Wharves without the previous consent in writing of the Wharf Superintendent.

3. Ethyl Fluid imported into the Port of Calcutta shall be packed in air-tight drums of substantial quality which shall be marked to show distinctly that they contain Ethyl Fluid.

4. Consignees of Ethyl Fluid shall make previous arrangement with the Collector of Customs, with the Superintendent of the Docks, Jetties, or Budge Budge Petroleum Wharves, as the case may be, for the immediate removal from the Commissioners' premises of the whole consignment.

5. Ethyl Fluid shall only be landed—

(*a*) between the hours of sunrise and sunset, and at such place or places as the Commissioners may direct, and

(*b*) after all disembarking passengers have landed.

6. No discharge of Ethyl Fluid shall commence until—

(1) the following documents are in the hands of the Dock Superintendent, Jetty Superintendent, or the Budge Budge Wharf Superintendent, as the case may be, namely:—

(*a*) Bill of lading, if any, endorsed by shipper of consignment.

(*b*) Delivery order, if any, from the Agent.

(*c*) Duty paid customs bill of entry (endorsed "Passed in full out of Customs control").

(*d*) Detailed invoice for the goods.

(*e*) A Commissioners' challan properly endorsed by their Collection office to show that the Commissioners' charges have been paid in full,

(2) the necessary road and rail vehicles, in the case of delivery at the Docks or Jetties, are in position to receive the consignment, and

(3) the Superintendent concerned has satisfied himself that the equipment and material necessary for dealing with any leakage found or which might occur during discharge are available for immediate use, the requisite equipment and material being supplied by the consignee.

7. When discharge has been permitted every consignment of Ethyl Fluid shall be inspected on board the vessel by the consignee's representative, and an officer appointed by the Superintendent concerned. No Ethyl Fluid drums showing any sign of leakage shall be landed until suitably repaired or placed in a larger receptacle offering sufficient protection from leakage.

8. Discharge of Ethyl Fluid shall be supervised by a responsible representative of the consignee, having adequate technical knowledge of the material.

9. Consignees shall provide labour for handling of vehicles for the immediate removal of the consignment from the Commissioners' premises.

10. At the Docks or Jetties Ethyl Fluid drums shall be discharged from the vessel in wire net slings by the Commissioners' cranes and removed from the slings by the consignee's labour direct to road or rail vehicles At Budge Budge Ethyl Fluid drums shall be removed direct by the consignee's labour into the consignee's rented premises.

11. After any consignment of Ethyl Fluid has passed over the Commissioners' Docks, Jetties or Wharves, the consignee's representative must inspect the places over which the consignment has been carried and deal with any points where leakage has taken place. This inspection and cleaning must be carried out in the presence of a responsible officer of the Commissioners, and the consignee's representative shall give a certificate that the Port Commissioners' premises are free from contamination and fit for general use.

12. No Ethyl Fluid drums shall in any circumstances be stored in any of the Commissioners' transit sheds or warehouses.

13. Any person committing a breach of any of the foregoing by-laws shall be liable to a fine not exceeding Rs. 500, and when the breach is a continuing breach, to a further fine which may extend to Rs. 200 for every day after the first during which the breach continues.

D. GLADDING,

Secy. to the Govt. of Bengal.

PUBLIC WORKS DEPARTMENT.

Establishment.

NOTIFICATION.

No. 138.—23rd March 1935.—Babu Amal Chandra Sen, Assistant Engineer, Bakarganj Division, is granted, under article 260 of the Civil Service Regulations, privilege leave for four months, with effect from the 4th March 1935.

D. J. BLOMFIELD, *Chief Engineer (offg.).*

DEPARTMENT OF AGRICULTURE AND INDUSTRIES.

Industries.

Calcutta, the 18th March 1935.

RESOLUTION—No. 1445Ind.

Minister-in-charge: The Hon'ble Nawab K. G. M. Faroqui, Khan Bahadur.

Read an application, dated the 9th October 1934, from Messrs. P. J. B. Hudson and W. B. Hudson of 11/3, Lansdowne Road, Calcutta, for a loan of Rs. 3,000 under the Bengal State Aid to Industries Act, 1931 (Bengal Act III of 1931), for the purpose of developing their factory for rebuilding and retreading of motor car tyres.

Read also the objections jointly filed by representatives of certain Tyre Companies and the applicants' reply thereto, as also the resolutions of the meetings of the Board of Industries, Bengal, held on the 5th November 1934 and the 15th January 1935 and the report submitted with letter No. 2280(4., dated the 13th February 1935, from the Secretary to the Board.

Order—Ordered that the loan of Rs. 3,000 asked for be sanctioned provided that all the twelve machines belonging to the applicants together with the new machines to be purchased with the loan are mortgaged to Government and also subject to the following conditions:—

(*i*) that a mortgage bond be executed by the applicants in a form to be prescribed by Government for the purpose;

(*ii*) that interest be charged at the rate of 6¼ per cent. per annum payable with each instalment on the balance of the unpaid capital;

(*iii*) that the entire loan with interest thereon be repaid in six equated annual payments of Rs. 615 each; and,

(*iv*) that penal interest be charged at the rate of 8 per cent. per annum on any overdue instalment of repayment of the loan.

Ordered also that the resolution be published in the *Calcutta Gazette.*

By order of the Govt. of Bengal

(Ministry of Industries),

J. D. V. HODGE,

Secy. to the Govt. of Bengal.

Orders by the Registrar of Co-operative Societies, Bengal.

No. 2411.—13th March 1935.—In modification of this office notification as noted below so far as it relates to the appointment of liquidator of co-operative societies noted against each in the district of Dacca, I hereby appoint the Inspector of Co-operative Societies, Dacca, instead, to be the liquidator of the said societies:—

Notification No. 76-L., dated the 17th May 1928—Bansgari Moslem Bank No. I.

Notification No. 127-L., dated the 1st May 1930—Pipalia Moslem Bank.

Notification No. 103-L., dated the 19th March 1929—Majlishpur Co-operative Bank.

Notification No. 165-L., dated the 17th July 1934—Baradi Senpara Co-operative Bank.

No. 2644.—25th March 1935.—The result of the Departmental Examination of Inspectors and Auditors of Co-operative Societies, Bengal, held on the 21st and 22nd December 1934 is published for general information :—

	Name.	Subjects now passed in—	Subjects liable to examination in—
	Inspectors.		
1	Maulvi Abdul Moyeed	Parts II and III (Lower Standard) Part I (Higher Standard).	Parts II and III (Higher Standard).
2	Babu Debendra Nath Mukherjee ..	Parts I and II (Higher Standard) ..	Part III (Higher Standard).
	Auditors.		
3	Babu Satyendra Nath Nandi ..	Part II (Higher Standard) ..	Part III (Higher Standard).
4	Babu Radhanath Bhattacherjee ..	Nil ..	Ditto.
5	Babu Bonoy K. Das	Part III (Higher Standard) ..	Part II (Lower Standard). Part II (Higher Standard).
6	Babu Suronath Sen ..	Nil ..	Part III (Higher Standard).
7	Maulvi Abdul Ghani	Nil ..	Ditto.
8	Maulvi Abu Reza Md. Badsha ..	Part II (Lower Standard) ..	Part II (Higher Standard).
9	Maulvi Shamsur Rahman ..	Parts I and III (Higher Standard) ..	Nil.
10	Maulvi Khondker Ali Ashraff Hossain	Part II (Lower Standard) ..	Parts II and III (Higher Standard).
11	Maulvi Md. Lal Muhammad ..	Parts I and III (Lower Standard)	Part II (Lower Standard) and Higher Standard.
12	Babu Protap Sankar Bagchi ..	Part III (Lower Standard) ..	Part III (Higher Standard).
13	Babu Amiya Mukherjee ..	Part II (Lower Standard) ..	Parts II and III (Higher Standard).
14	Maulvi Abdus Sattar	Parts I, II and III (Higher Standard)	Nil.
15	Maulvi Nurul Huda	Part I (Higher Standard)	Parts II and III (Higher Standard).
16	Babu Tarini Nath Roy	Nil ..	Parts I and III (Lower Standard) and Higher Standard.
17	Babu Krishnapada Nag	Nil ..	Part III (Higher Standard).
18	Babu Rai Mohon Sarkar ..	Parts II and III (Lower Standard) and Part I (Higher Standard).	Parts II and III (Higher Standard).
19	Maulvi Md. Monsur Ali	Parts II and III (Lower Standard) and Part I (Higher Standard).	Ditto.
20	Maulvi Abu Muhammad Shamsuddin Haider.	Nil ..	Part II (Lower Standard). Parts II and III (Higher Standard).
21	Maulvi Md. Hossain	Nil ..	Lower Standard and Higher Standard.
22	Babu Sarat Chandra Biswas ..	Parts I, II and III (Higher Standard)	Nil.
23	Babu Harendra K. Tarafdar ..	Parts I, II and III (Lower Standard)	Higher Standard.
24	Maulvi Rafiquddin	Ditto ..	Ditto.
25	Babu Nirmal Ch. Roy	Parts I, II and III (Higher Standard)	Nil.
26	Babu Hariprosanna Chakrabarty ..	Part I (Higher Standard) ..	Parts II and III (Higher Standard).
27	Babu Sukumar Das Gupta ..	Part III (Higher Standard) ..	Nil.
28	Maulvi Syed Bedar Bukht ..	Parts I and III (Higher Standard)	Nil.
29	Maulvi Choudhury Golam Ahad ..	Nil ..	Lower Standard and Higher Standard.
30	Babu Gahendra Bahadur Rai ..	Nil ..	Ditto.
31	Maulvi A. K. M. Najumul Huq ..	Nil ..	Ditto.
32	Babu Bimal Chandra Bhattacherjee ..	Nil ..	Ditto.
33	Babu Nripendra Nath Sen Gupta ..	Part I (Lower Standard) ..	Parts II and III (Lower Standard) and Higher Standard.
34	Maulvi Abdul Latif	Nil ..	Lower Standard and Higher Standard.

A. M. ARSHADALI,
Regr., Co-operative Societies, Bengal (offg.).

REVENUE DEPARTMENT.

Land Revenue.

NOTIFICATIONS.

24-Parganas-Calcutta.—No. 4327L.R.—21st March 1935.—In modification of the notification No. 7692L.R., dated the 19th July 1934, published at page 1076, Part I of the *Calcutta Gazette*, dated the 26th July 1934, the Governor in Council is pleased to direct that a survey under section 3 of the Calcutta Survey Act, 1887 (Bengal Act I of 1887), and under section 3 of the Bengal Survey Act, 1885 (Bengal Act V of 1885), shall be made of the Government lands known as Tolly's Nullah surplus lands situated on both sides of Tolly's Nullah extending from the River Hooghly up to the Tollyganj bridge, lying partly within the limits of the town of Calcutta and partly within the administrative boundaries of the district of 24-Parganas, and that the boundaries of the estates, tenures, mauzas and fields be demarcated on the lands so surveyed.

24-Parganas - Calcutta. — No. 4328L.R.—21st March 1935.—Under section 4 of the Bengal Survey Act, 1875 (Act V of 1875), and under section 3 of the Calcutta Survey Act, 1887 (Bengal Act I of 1887), the undermentioned officers are appointed to be the Assistant Superintendents of Survey for the purpose of carrying out the survey directed to be made under Government notification No. 4327L.R., dated the 21st March 1935, in the district of 24-Parganas and the city of Calcutta :—

Major C. B. Sexton, Extra Assistant Superintendent of Surveys.

Babu Lal Mohan Bose, Sub-Deputy Collector.

This notification supersedes notification No. 7693L.R., dated the 19th July 1934, published at page 1077, Part I of the *Calcutta Gazette*, dated the 26th July 1934.

Faridpur. — No. 4343L.R. — 21st March 1935.—In exercise of the power conferred by sub-section (*3*) of section 158A of the Bengal Tenancy Act, 1885 (Act VIII of 1885), the Governor in Council is pleased to appoint the Certificate Officer of Madaripur, in the district of Faridpur, to perform the functions of a Certificate Officer under the Bengal Public Demands Recovery Act, 1913 (Bengal Act III of 1913), for the purposes of the said section in respect of the recovery of arrears of rent (including cesses) due to the estate of Babu Prafulla Nath Tagore in the district of Faridpur.

Noakhali. — No. 4488L.R. — 23rd March 1935.—In exercise of the powers conferred by section 3 of the Bengal Land Revenue Settlement Regulation, 1825 (IX of 1825), read with section 20 of the Bengal Land Revenue Settlement Regulation, 1822 (VII of 1822), the Governor in Council is pleased to vest Babu Mahim Chandra Dutta, Settlement Kanungo, who has, by notification No. 4121-C.P., dated the 9th March 1935, been vested by the Board of Revenue with the powers of a Collector in the estates of Maulvi Fakhrul Islam Choudhuri and others and also in the estate of the Haidar Zamindary, Ltd., in the district of Noakhali, for the purpose of the work of maintenance of the record-of-rights of those estates, with powers under section 19 of the said Bengal Land Revenue Settlement Regulation, 1822, within the local limits of those estates, to require and compel persons mentioned in the section to attend and produce accounts and other papers and to examine such persons under that section for the purpose of the said work of the maintenance of the record-of-rights.

ERRATUM.

Jalpaiguri. — No. 4490L.R.—23rd March 1935.—In notification No. 3151L.R., dated the 25th February 1935, published at page 440 of Part I of the *Calcutta Gazette* of the 28th idem, in respect of grazing block No. XII in the Western Duars of the Jalpaiguri district, *for* the word "Duloali" *read* "Duldali."

Land Acquisition

NOTIFICATIONS.

Faridpur. — No. 4128L.A. — 14th March 1935.—In exercise of the powers conferred by section 48 (*1*) of the Land Acquisition Act, I of 1894, the Governor in Council is pleased to withdraw from the acquisition of land notified under declaration No. 10924L.A., dated the 26th October 1934, published at page 1710, Part I of the *Calcutta Gazette* of the 1st November 1934, and required for rebuilding the mortuary at Madaripur on a new site in the village of Tarmugaria, jurisdiction list No. 370, thana Madaripur, pargana Madaripur, district Faridpur.

Khulna.—No. 4172L.A.—18th March 1935. —Whereas it appears to the Governor in Council that land is likely to be required to be taken by Government at the expense of the Khulna Municipality for a public purpose, viz., for extension of trenching ground at Sonadanga, in the village of Baniakhamar, jurisdiction list No. 3, thana Khulna, pargana Khalispur, district Khulna, it is hereby notified that for the above purpose, a piece of land comprising parts of cadastral plot Nos. 211, 210, 226, 231, 228, 229, 293, 230, 292, 291, 288, 290, 289, 327, 326, 325, 324, 420, 419, 418, 415, 432, 433, 436, 438, 439, 448, 447, 446, 441, 440, 314, 439, 435, 437 and 438, and measuring, more or less, 4·884 acres, is likely to be required within the aforesaid village of Baniakhamar.

This notification is made, under the provisions of section 4 of Act I of 1894, to all whom it may concern.

A plan of the land may be inspected in the office of the Collector of Khulna.

In exercise of the powers conferred by the aforesaid section, the Governor in Council is pleased to authorise the officers for the time being engaged in the undertaking, with their servants and workmen, to enter upon and survey the land and do all other acts required or permitted by that section.

Any person interested in the above land, who has any objection to the acquisition thereof, may, within thirty days after the date on which public notice of the substance of this notification is given in the locality, file an objection in writing before the Collector of Khulna.

Rajshahi. — No. 4332L.A. — 21st March 1935.—Whereas it appears to the Governor in Council that land is likely to be required to be taken by Government at the public expense for a public purpose, viz., for the construction of a ring bund at Nawabganj, Rajshahi, in the villages of Nabinagar, jurisdiction list No. 213, Keshabpur, jurisdiction list No. 212, and Sreerampur, jurisdiction list No. 205, thana Boalia, parganas Khastaluk and Garerhat, district Rajshahi, it is hereby notified that for the above purpose a piece of land comprising part of cadastral plots Nos. 907, 909 and 913 of Nabinagar, part of plots Nos. 129, 137, 144, 146, 147, 148, 150, 154, 158 and 173 and plot No. 159 of Keshabpur and part of plot No. 174 of Sreerampur, and measuring, more or less, 1·94 acres, is likely to be required within the aforesaid villages of Nabinagar, Keshabpur and Sreerampur.

This notification is made, under the provisions of section 4 of Act I of 1894, to all whom it may concern.

A plan of the land may be inspected in the office of the Collector of Rajshahi.

In exercise of the powers conferred by the aforesaid section, the Governor in Council is pleased to authorise the officers for the time being engaged in the undertaking, with their servants and workmen, to enter upon and survey the land and do all other acts required or permitted by that section.

In exercise of the powers conferred by section 17 (*4*) of the Land Acquisition Act of 1894 as amended by Act XXXVIII of 1923, the Governor in Council is pleased to direct that the provisions of section 5A of the Act shall not apply in this case.

ERRATUM.

Mymensingh.—No. 4335L.A.—21st March 1935.—In line 17 of the notification No. 1827-L.A., dated the 14th February 1934, under section 4 of Act I of 1894, published at page 290, Part I of the *Calcutta Gazette* of the 22nd idem, in respect of the proposed acquisition of land required by the Tangail Municipality for re-excavation of the Central Khal in the municipality to improve the sanitation in the villages of Pardighulia and Biswas Betka in the district of Mymensingh, *for* the figures "1·92 acres" *read* "1·40 acres."

DECLARATIONS.

24-Parganas.—No. 4169L.A.—18th March 1935.—Whereas it appears to the Governor in Council that land is required to be taken by Government at the expense of the Naihati Municipality for a public purpose, viz., for the improvement of the drainage of the locality, in the village of Naihati, jurisdiction list No. 3, thana Naihati, pargana Havelisahar, district 24-Parganas, it is hereby declared that for the above purpose a piece of land comprising a portion of cadastral plot No. 847, and measuring, more or less, 0·0032 of an acre, is required within the aforesaid village of Naihati.

This declaration is made, under the provisions of section 6 of Act I of 1894, to all whom it may concern.

A plan of the land may be inspected in the office of the Commissioners of the Naihati Municipality.

Dacca.—No. 4338L.A.—21st March 1935.—Whereas it appears to the Governor in Council that land is required to be taken by Government partly at the public expense and partly at the expense of the Munshiganj High English School authorities for a public purpose, viz., for erecting a gymnasium of the Munshiganj High English School in the village of Kotgaon, pargana Bikrampur, zilla Dacca, it is hereby declared that for the above purpose a piece of land measuring, more or less, 0·12 of an acre and comprising part of cadastral survey plot No. 228 of mauza Kotgaon is required within the aforesaid village of Kotgaon.

This declaration is made, under the provisions of section 6, Act I of 1894, to all whom it may concern.

A plan of the land may be inspected in the office of the Subdivisional Officer of Munshiganj, district Dacca.

Excluded Area.

NOTIFICATION.

Darjeeling. — No. 4125E.A.—14th March 1935.—The following draft of amendments, which, in exercise of the power conferred by clauses (*a*) and (*aa*) of section 138 of the Bengal Local Self-Government Act of 1885 (Bengal Act III of 1885), the Governor in Council proposes to make in the rules published with notification, dated the 15th December 1885, as subsequently amended, is published for the information of persons likely to be affected thereby in the district of Darjeeling.

2. The draft will be taken into consideration on the 21st May 1935, and any objection or suggestion received by the undersigned, through the Deputy Commissioner of Darjeeling, before that date, will be duly considered:—

Draft amendments.

1. *For* rule 1 *substitute* the following:—

"1. In these rules—

(*a*) a person shall be deemed to be resident within the area comprised in a union or within the area under the authority of a local board if he has a fixed place of abode within such area and a person who has his domicile in one place but is obliged, for purposes of business or otherwise, to spend the greater or a considerable portion of his time in another is a resident not of the latter but of the former place;

(*b*) 'thana,' as used in Part II of these rules, means—

(*1*) a revenue thana, or

(*2*) a police-station, or

(*3*) a combination of two or more police-stations or parts of police-stations in the same subdivision, or

(*4*) any portion of a police-station comprising—

(*i*) one or more unions created under section 5 of the Bengal Village Self-Government Act, 1919 (Bengal Act V of 1919), or

(*ii*) one or more villages created under section 4 of the Village Chaukidari Act, 1870 (Bengal Act IV of 1870), or

(*iii*) one or more such villages together with one or more such unions as may be decided in each case by the Commissioner, but does not include a special electoral unit;

(*c*) 'special electoral unit' means any group of such thanas that has been declared by the Commissioner to be an electoral unit for the purpose of election to a special seat;

(*d*) 'special seat' means a seat reserved for a minority community declared to be such under section 10A;

(*e*) 'special election' means an election to a special seat;

(*f*) 'special candidate' means a candidate for election to a special seat;

(*g*) 'thana election' means an election to any seat allocated to a thana, including a special seat; and

(*h*) 'ordinary seat' means any seat other than a special seat."

2. In rule 1A, *for* the word "Magistrate" *substitute* the words "Magistrate of the district."

3. *For* rule 19, *substitute* the following:—

"19. When the number of members of a local board has been fixed by a notification issued under section 8, the Commissioner, after consultation with the Magistrate of the district, shall decide the number of members who shall be elected for each thana within the area of such local board, and shall issue orders accordingly:

Provided that, when the Local Government has declared a community in such area to be a minority community under section 10A, the Commisioner shall, before deciding the number of members to be elected for each thana determine the number of special seats on the local board which are to be reserved according to the principle laid down in section 10A, and allocate such seats—

(*a*) to any thana or thanas, or

(*b*) to any special electoral unit or units, in such manner as he may deem fit, by orders which shall be published in the *Calcutta Gazette*, at the district and subdivisional offices and at the headquarters of each of the thanas in question, and in such other manner as the Commissioner may decide."

4. In rule 26B, *for* the word "Magistrate" in the fourth line *substitute* the words "Magistrate of the district."

5. *For* the first paragraph of rule 26C *substitute* the following:—

"The register shall be amended in accordance with the decisions on the applications made under rule 24 or rule 25 and shall be deemed to be the final register of persons entitled to vote at the election. The Final register shall show for what special electoral unit, if any, the voters of each thana are entitled to vote."

6. *For* rule 29 *substitute* the following:—

"29. (*1*) The Magistrate of the district shall, at least ten weeks before the date fixed for a thana election, or for an election in a special electoral unit, issue notices calling for nominations of candidates. Such notices shall be published at the office of every union board or president panchayat within the thana or thanas concerned. Within three weeks from the date of publication of the notices every person who is a candidate for election shall send his name to the Magistrate of the district with the necessary particulars filled up in the following form supported by the signatures or thumb impressions of ten electors of the thana or special electoral unit in which he proposes to stand, together with the duly receipted treasury chalan showing that the deposit required by section 16A has been made. No names of candidates shall be received after the expiration of such period.

(*2*) Any candidate belonging to a minority community declared as such under section 10A who is nominated for a thana election shall be deemed to have been nominated also for election in the special electoral unit in which that thana is included and *vice versa*."

FORM.

For the nomination of candidates for election to the Local Board.

Name of thana or special electoral unit in which election is sought.....

Name of candidate.....

Address.....

Number in voters' register.....

Particulars of qualifications.....

Signature or thumb impression of candidate with date.....

Names of ten electors supporting..... .....

Their numbers in the voters' register..... .

Particulars of their qualifications.....

Signature or thumb impression of electors supporting with date.....

Explanation.—For the purposes of this rule the latest date on which the notice is published at the office of any union board or president panchayat shall be deemed to be the date of publication of the notice in each union within the thana.

7. In rule 31, *for* the word "Magistrates'" the words "District Magistrate's," and in line 3 *for* the words "in the thana" *substitute* the words "in every thana concerned."

8. *For* rules 31A and 32 *substitute* the following three rules, viz., 31A, 32 and 32A:—

"31A. When elections to special and to ordinary seats are not being held simultaneously the Magistrate of the district shall—

(*a*) if the number of qualified candidates in the thana or in the special electoral unit concerned is not greater than the number of vacancies, at once declare such candidates to be duly elected, and

(*b*) if the number of qualified candidates be greater than the number of vacancies, fix a date for holding the election.

32. When elections to special and to ordinary seats are being held simultaneously in any thana or in any group of thanas—

(*1*) the Magistrate of the district shall—

(*a*) first, if the number of qualified special candidates is not greater than the number of special seats allocated to such thana or group of thanas, at once declare such candidates to be duly elected, and

(*b*) then, if the number of the remaining qualified candidates for each thana is not greater than the number of vacancies for that thana, declare such candidates to be duly elected;

(*2*) if the number of qualified special candidates is greater than the number of special seats allocated to such thana or group of thanas but the total number of qualified candidates for both special and ordinary seats is not greater than the total number of vacancies, the Magistrate of the district shall forthwith declare all such candidates to be duly elected and shall decide by lot which of the special candidates shall be deemed to have been elected to the special seats and which to the ordinary seats.

(*3*) The Magistrate of the district shall fix a date for holding the election—

(*a*) if the number of qualified special candidates is greater than the number of special seats and the total number of qualified candidates is greater than the total number of vacancies, or

(*b*) if, after he has under clause (*1*) (*a*) declared the qualified special candidates to be duly elected to special seats, the number of qualified candidates for the ordinary seats is greater than the number of vacant ordinary seats.

32A. When the Magistrate of the district has fixed a date for holding an election, he shall notify such date in the *Calcutta Gazette* and when any such date relates to an election in a special electoral unit he shall also notify the date, time and place at which he shall declare the result of the elections under rule 43A (*iii*)."

9. *For* rule 35 *substitute* the following:—

"35. An elector duly qualified under rule 21 shall be entitled to vote for the thana for which he is registered as a voter and for the special electoral unit, if any, in which that thana is included, and for no other thana or special electoral unit. He shall be entitled to vote for as many candidates as there are vacancies for such thana and for such special electoral unit, but shall not give more than one vote for a single candidate in the thana election or special election respectively."

10. *For* rule 41 *substitute* the following:—

"41. The presiding officer or the assistant presiding officer, as the case may be, shall then proceed to take a poll for each candidate, the votes being recorded by himself and his assistant presiding officers, if any. Votes polled at each polling centre for the special seats, if any, shall be recorded separately."

11. *For* rule 43 *substitute* the following:—

"43. At a thana election where there is only one polling centre, the presiding officer shall declare such candidates as have received the largest number of votes to be duly elected as soon as the poll is finally closed:

Provided that where a special seat has been allocated to a thana, the presiding officer shall—

(*a*) first decide the result of election to the special seat, declaring that special candidate to be duly elected who has received the largest number of votes, and

(*b*) then decide the result of the election to the ordinary seat or seats, declaring to be duly elected among the remaining candidates the candidate or candidates who have received the largest number of votes."

12. *For* rule 43A *substitute* the following:—

"43A. At a thana election or at an election in a special electoral unit where there is more than one polling centre the presiding officer or the assistant presiding officer, as the case may be, shall, on the conclusion of the poll, seal up the records of the votes prepared by him and prepare a report stating the number of voters who attended and the number of votes cast in favour of each candidate in the special election and thana election separately. He shall announce publicly the number of votes cast at the centre for each candidate. Any record sealed and report prepared by an assistant presiding officer shall be forwarded without delay to the presiding officer. When the presiding officer has received all the records and reports, he shall, after checking the records with the reports, record the number of total votes cast in favour of each candidate. He shall then proceed in the following manner:—

(*i*) if there is no special seat allotted to the thana or if there is no special election, he shall declare the candidate or candidates who have received the largest number of votes to be duly elected at the place and time previously notified under rule 33;

(*ii*) if there is a special seat allotted to the thana he shall declare the result of election to the special seat as well as to the ordinary seat or seats in the manner prescribed in proviso (*a*) to rule 43; or

(*iii*) if the thana is a part of a special electoral unit, he shall announce publicly the number of votes cast for each candidate and forward the records in a sealed cover to the Magistrate of the district for declaration of the results of the election to the special as well as ordinary seats.

43AA. The Magistrate of the district shall on receipt of the report from the presiding officer under rule 43A (*iii*) declare the result of the elections in the following manner:—

(*a*) he shall first decide the result of the special election declaring the special candidate or candidates to be duly elected who may have received the largest number of votes, and

(*b*) he shall then decide the result of the ordinary thana election declaring to be duly elected among the remaining candidates the candidate or candidates who may have received the largest number of votes."

13. *For* rule 47 *substitute* the following:—

"47. (*1*) In the event of any person being elected to two or more ordinary or to two or more special seats, such person shall be at liberty to choose which thana or special electoral unit he will represent, and in every other thana or special electoral unit for which the said person has been returned, the result of the election shall be determined under the preceding rule as if no votes had been recorded for him, and, if necessary, a fresh election will be held.

(*2*) If any person is elected, both to an ordinary and to a special seat, he shall be deemed subject to the provisions of sub-rule (*2*) of rule 32 to have been elected to the special seat only and, in the thana for which he has been returned, the result of the election shall be determined as prescribed in sub-rule (*1*)."

14. *For* rule 53 *substitute* the following:—

"53. A local board shall not elect members for the district board until—

(*a*) the number of members of the district board to be elected by such local board to ordinary or to special seats has been fixed by notification under section 7 or section 10A of the Act as the case may be, and

(*b*) such local board has elected a Chairman."

15. *After* rule 53 *insert* the following as a new rule:—

"53A. When under section 10A a community has been determined by the Local Government to be a minority community in any area under the authority of a district board, the Commissioner shall determine—(*i*) how many seats shall be reserved on the district board for the minority community; and (*ii*) how many members shall be elected by each local board to such reserved seats on the district board:

Provided that in no case shall he declare all the seats to which election is to be made by any local board to be special seats."

16. *For* rule 54 *substitute* the following:—

"54. (*1*) Within one month from the date of publication of the notifications referred to in clause (*a*) of rule 53 or of the election of the Chairman of a newly constituted or reconstituted local board, whichever be the later, the local board shall elect the requisite number of members for the district board at a special meeting to be convened by the Chairman.

(*2*) The meeting shall be presided over by the Chairman or in his absence by the Vice-Chairman, or in the absence of both the Chairman and the Vice-Chairman, by a member elected for the purpose by the members present. In the last case, the member elected to preside shall be duly proposed and seconded.

(*3*) The election shall proceed as follows:—

(*a*) Any member present may propose a candidate either by name or by virtue of his office for election to the district board.

(*b*) Such proposal shall not be taken into consideration unless it has been seconded by a member other than the candidate or the proposer.

(*c*) If the number of candidates duly proposed and seconded either for the special or for the ordinary seats, as the case may be, be less than or equal to the number to be elected by the local board in each case, the President shall declare such candidate to be duly elected.

(*d*) If the number of candidates duly proposed and seconded be greater than the number to be elected by the local board the President shall hand to each member present a voting paper in the form below in which the names of candidates who have been duly proposed and seconded have been entered and shall ask each member to record his vote by placing the mark x in the space provided for the purpose in the voting paper opposite to the name of the candidate or the names of the candidates whom the member prefers and to sign his name on the back of the counterfoil of the voting paper.

Voting paper.

Name of candidate.	Space for placing mark X.	Counterfoil for signature of the voter.
1.		Fold here (perforated).
2.		
3.		
4.		

(*e*) The voting paper shall be invalid if the mark x is placed opposite the name of more candidates than the number to be elected or if it is so placed as to render it doubtful to which candidate such mark is intended to apply, or if any mark is made on the foil of it by which the voter may be identified.

(*f*) Each member shall proceed in turn to a place set aside for the purpose and shall there fill in the voting paper in such a manner that no other person can perceive what he writes. After placing the mark x on the voting paper he shall fold the counterfoil so as to conceal the votes recorded, sign his name on the back of the counterfoil and then hand the paper to the President. Without such folding of the counterfoil or signature the voting paper shall be invalid.

(*g*) The President as soon as all the voting papers have been delivered to him, shall in the order hereinafter specified—

(*i*) reject any voting paper which is unsigned or of which the counterfoil is not properly folded;

(*ii*) tear off the counterfoils containing the signature and place them apart from the voting papers proper;

(*iii*) reject any voting paper which is irregularly marked;

(*iv*) read out the names of the candidates against which the mark x has been validly made;

(*v*) count the votes;

(*vi*) declare the special candidate or candidates to whom the largest number of votes may have been given to be duly elected to the special seat or seats on the district board; and

(*vii*) declare those among the remaining candidates to whom the largest number of votes may have been given to be duly elected to the ordinary seats on the district board:

Provided that where an equality of votes is found to exist between any candidates and the addition of one vote will entitle any of the candidates to be declared elected, the determination of the person or persons to whom such one additional vote shall be deemed to have been given shall be made by lot to be drawn in the presence of the President and in such manner as he may direct.

(*4*) Notwithstanding anything contained in rule 74 or in the Rules of Business adopted by any board, if there are more candidates than vacancies the names only of the persons proposing and seconding and the number of persons voting for each candidate and the names of the candidates duly elected shall be entered in the proceedings."

17. *Delete* rules 61 and 62.

Miscellaneous.

NOTIFICATION.

Howrah - Calcutta. — No. 4418Mis.—22nd March 1935.—Rai Nepal Chandra Sen Bahadur, Deputy Magistrate and Deputy Collector, Uluberia, Howrah, is appointed to be Assistant Secretary to Government in the Revenue Department, with effect from the date on which he may take over charge of his duties.

O. M. MARTIN,
Secy. to the Govt. of Bengal.

Excise.

Orders by the Commissioner of Excise and Salt, Bengal.

No. 62Exc. — 21st March 1935.—Maulvi Jalaluddin Khan, Inspector of Excise and Salt, employed on Matches excise work in Calcutta, was allowed leave on average pay for fourteen days, with effect from the 11th February 1935, under rule 81 (*b*) (*ii*) of the Fundamental Rules.

S. K. HALDAR,
Commr. of Excise and Salt, Bengal.

IRRIGATION DEPARTMENT.

Irrigation.

NOTIFICATION.

No. 2-I. — 22nd February 1935. — The following draft of amendments, which in exercise of the powers conferred by section 11 of the Canals Act, 1864 (Bengal Act V of 1864), the Governor in Council intends to make in the revised rules for the Calcutta and Eastern Canals, Tolly's Nala and Sundarbans Steamer Route (published in Bengal Government notification No. 16-I., dated the 14th April 1924, at pages 829-34, Part I of the *Calcutta Gazette* of the 16th idem), is hereby published for the information of persons likely to be affected thereby.

The draft will be taken into consideration on or after the 18th April 1935, and any objections or suggestion received by the undersigned before that date will be considered:—

Draft amendments.

Insert the following new rules as rules 31 and 32 of the said rules:—

Rule 31.—No vessel or raft or float, except Government vessels plying in the interests of Government service, shall pass the Kristopur Toll Station in either direction, between 7 p.m. and 6 a.m. Service motor launches, carrying passengers, plying on monthly toll tickets, may, however, pass the Toll Office up to 9 p.m.

Rule 32.—In case a service motor launch carrying passengers wishes to pass the Kristopur Toll Station between 9 p.m. and 7 a.m. a single trip toll will be realised from the same, in addition to any previous toll paid by the launch on a single or monthly ticket.

Establishment.

NOTIFICATIONS.

No. 3.—22nd March 1935.—Mr. T. A. Curry, Chief Engineer, Bengal, Irrigation Department, is granted leave for seven months, viz., leave on average pay for three months and twenty-one days, under rule 81 (*b*) (*i*) of the Fundamental Rules, and leave on half average pay for the remaining period, under rule 81 (*d*) of those Rules, with effect from the 10th April 1935, or from any subsequent date on which he actually proceeds on leave.

No. 4.—22nd March 1935.—Rai S. N. Banerjee Bahadur, Superintending Engineer, Southern Circle, is appointed to act as Chief Engineer, Irrigation Department, during the absence, on leave, of Mr. T. A. Curry, or until further orders.

No. 5.—26th March 1935.—Babu Prosad Das Sen Gupta, Assistant Engineer, Calcutta Canals Subdivision, is appointed to hold charge of the current duties of the office of the Executive Engineer, Canals Division, in addition to his own duties until further orders.

J. D. V. HODGE,
Secy. to the Govt. of Bengal.

LEGISLATIVE DEPARTMENT.

NOTIFICATION.

No. 266L.—14th March, 1935.—In continuation of the leave granted in this department notification No. 1097L., dated the 27th November, 1934, Mr. Khagendra Nath Majumdar, First Assistant Secretary to the Government of Bengal in the Legislative Department, has been granted an extension of leave on average pay for seven days from the 17th to the 23rd February, 1935, both days inclusive, under rule 81 (*b*) (*ii*) of the Fundamental Rules, with permission to affix Sunday, the 24th February, 1935, to the leave.

A. DEC. WILLIAMS,
Secy. to the Govt. of Bengal.

BOARD OF REVENUE, BENGAL.

NOTIFICATION.

No. 5078Bat.—23rd March 1935. — The following draft of a notification, which the Board proposes to issue in exercise of the power conferred by section 121 of the Bengal Estates Partition Act (V of 1897), is published for the information of persons likely to be affected thereby.

2. The draft will be taken into consideration on the 15th June 1935, and any objection or suggestion with respect thereto, which may be received by the undersigned before that date, will be duly considered:—

Draft Notification.

In exercise of the power conferred by section 121 of the Estates Partition Act (V (B.C.) of 1897), the Board of Revenue, Bengal, is pleased to make the following amendments in the rule 4 of the Bengal Batwara Manual, 1927:—

Rule 4, page 42 of the Manual—Scale of fees.—The maximum scale of fees per acre to be levied under section 42 (3) of the Bengal Act V of 1897 shall be at the sliding rate as follows:—

	On recent record.	On old record or where there is no record.
	Rs. a.	Rs. a.
Under 100 acres ..	2 0	2 8
Over 100 and under 500 acres	1 8	2 0
Over 500 acres ..	1 0	1 8

S. BANERJI,
Secy., Board of Revenue, Bengal.

TREASURY NOTICES.

Rajshahi, the 11th March 1935.

Rai Sahib Rajendralal Acharji, Sub-Deputy Collector, is placed in charge of the Rajshahi Treasury with effect from the forenoon of the 18th March 1935. He is authorised to draw bills on other treasuries.

A. S. LARKIN, *Collector.*

Orders by the Assistant Accountant-General, Bengal.

The Treasury, the 18th March 1935.

It is notified that the refund order No. 870 containing 50 orders "Pink" is in use by the Income-tax Office, Railway and Miscellaneous Salaries Circle, Calcutta, with effect from the 7th March 1935.

It is notified that the refund order No. 3889 containing 50 orders is in use by the Income-tax Office, Central Salaries Circle, Calcutta, with effect from the 5th March 1935.

P. K. BASU,
Asst. Accountant-General, Bengal.

SHERIFF'S OFFICE.

The 21st March 1935.

Notice is hereby given that the Second Criminal Sessions of the year 1935 of the High Court of Judicature at Fort William in Bengal for the town of Calcutta and factory of Fort William and the places subordinate thereto will be held at the Court House, in the town of Calcutta, on Wednesday, the 8th day of May next, at 11 o'clock in the forenoon, and thenceforward from day to day until the said sessions be over. And it is hereby proclaimed that all persons who are to prosecute any of the prisoners to be brought up for trial at the said sessions be present then and there to prosecute.

A. H. GHUZNAVI, *Sheriff.*

সরিফ আফিস, সন ১৯৩৫ সালের ২১শে মার্চ্চ।

সকলকে সমাচার দেওয়া যাইতেছে যে, সুবে বাঙ্গালার ফোর্ট উইলিয়ম দুর্গের অধীনে সহর কলিকাতার ও অন্যান্য স্থানের ফৌজদারী বিচার নিষ্পত্তি জন্য আগামী সন ১৯৩৫ সালের ৮ই মে বুধবার বেলা ১১ ঘটিকার সময় এবং যে পর্য্যন্ত সেসিয়নের কার্য্য সমাধা না হয়, প্রতিদিন উক্ত সময়ে কলিকাতার হাইকোর্টের আপন আদালত ঘরে সন ১৯৩৫ সালের দ্বিতীয় ক্রিমিন্যাল সেসিয়ন বসিবেক, এবং এতদ্বারা প্রচার করা যাইতেছে যে, যে সকল ব্যক্তি কোন কয়েদীর বিরুদ্ধে কোন ফৌজদারী মিছিল করিবেক, তাহারা উক্ত স্থানে উক্ত সময়ে হাজির থাকিয়া মোকদ্দমা করে। ইতি।

এ, এইচ, গজনাভি,
সরিফ।

HIGH COURT NOTICES.

Civil.

The 14th March 1935.

No. 5551A.—The officers mentioned in the following schedule are vested with the powers of a Judge of a Court of Small Causes for the trial of suits cognizable by such a Court up to the value of Rs. 250 within the local limits specified against each:—

Schedule.

Babu Dhirendra Nath Bagchi, munsif of Ranaghat—Ranaghat munsifi.

Babu Janardan Prasad Mukherji, munsif of Krishnagar (Nadia)—Krishnagar munsifi.

No. 5566A.—Babu Janardan Prasad Mukherji, munsif of Krishnagar, in the district of Nadia, is vested, under section 19, sub-section (2) of the Bengal, Agra and Assam Civil Courts Act, 1887 (XII of 1887), as amended by the Decentralization Act, 1914 (IV of 1914), with powers to try, under the ordinary procedure, original suits up to the value of Rs. 2,000 arising within the local limits of the original jurisdiction of the District Judge of Nadia.

The 18th March 1935.

No. 5676A.—Maulvi Abdul Awal, munsif of Jessore (Sadar), is vested with the powers of a Judge of a Court of Small Causes for the trial of suits cognizable by such a Court up to the value of Rs. 100 within the local limits of the Sadar munsifi of Jessore.

English Department.

The 14th March 1935.

No. 5563A.—In exercise of the powers delegated to the High Court by the notification of the Government of Bengal, No. 64 J.D., dated the 30th April 1915, the officers mentioned in the following schedule are vested, under article 8 of the Second Schedule of the Provincial Small Cause Courts Act, 1887 (IX of 1887), with powers to try, under the Small Cause Court procedure, suits up to the value of Rs. 250 for the recovery of rents of homestead lands arising within the municipal area within their respective jurisdiction:—

Schedule.

Babu Dhirendra Nath Bagchi, munsif, Ranaghat (Nadia).
Babu Janardan Prasad Mukherji, munsif, Krishnagar (Nadia).

By order of the High Court,
N. L. HINDLEY, *Registrar.*

Civil.

The 22nd March 1935.

No. 5992A.—Babu Amulya Kumar Guha, munsif of Howrah, in the district of Hooghly, is vested under section 19, sub-section (2) of the Bengal, Agra and Assam Civil Courts Act, 1887 (XII of 1887), as amended by the Decentralization Act, 1914 (IV of 1914), with powers to try, under the ordinary procedure, original suits up to the value of Rs. 2,000 arising within the local limits of the executive district of Howrah comprising the munsifis of Howrah, Uluberia and Amta.

No. 5995A.—Babu Amulya Kumar Guha, munsif of Howrah, in the district of Hooghly, is vested with the powers of a Judge of a Court of Small Causes for the trial of suits cognizable by such a Court up to the value of Rs. 250 within the local limits of the Howrah munsifi.

No. 5998A.—In exercise of the powers delegated to the High Court by the notification of the Government of Bengal, No. 64J.D., dated the 30th April 1915, Babu Amulya Kumar Guha, munsif of Howrah, in the district of Hooghly, is vested, under article 8 of the Second Schedule of the Provincial Small Cause Courts Act, 1887 (IX of 1887), with powers to try, under the Small Cause Court procedure, suits up to the value of Rs. 250 for the recovery of rents of homestead lands arising within the municipal area within his jurisdiction.

By order of the High Court,

E. S. SIMPSON, *Registrar.*

ORDERS BY COMMISSIONERS OF DIVISIONS.

Burdwan Division—Chinsura.

No. 553L.S.-G. — 13th March 1935.—In exercise of the powers conferred on me by section 19 (*2*) of the Bengal Local Self-Government Act [Act III (B.C.) of 1885] and acting under the orders of the Local Government given in the exercise of the administrative control vested in them by section 29B of the Act, I hereby appoint Maulvi Abdur Rauf, B.L., to be a member of the Arambagh local board in the district of Hooghly, *vice* Khondkar Khadem Ali, removed.

No. 1238J.G. — 13th March 1935.—Babu Sharat Chandra Guha, Sub-Deputy Collector, on leave, posted to this division as per Government notification No. 2500A of the 6th March 1935, is posted to the Serampore subdivision of the Hooghly district for employment on general duty. The posting is made in the public interest.

No. 580L.S.-G.—14th March 1935.—It is hereby notified for general information that, under rule 20 (*b*) of the rules for the management of charitable hospitals and dispensaries in Bengal, the following gentlemen have been appointed to be members of the committee for the management of the charitable dispensary at Pingla in the district of Midnapore:—

Babu Bhuban Mohan Bose.

Babu Dhirendra Nath Hajra.

Babu Nagendra Nath Pal, B.A.

Babu Benoy Bhusan Pal, B.A.

Babu Nibaran Chandra Mitra, B.A.

Babu Manmatha Nath Ghosh.

Babu Prodyat Kumar Pal.

Babu Jatindra Nath Maiti.

L. B. BURROWS, *Commissioner.*

No. 1274J.G.—14th March 1935.—It is hereby notified that Babu Amarendra Nath Chattopadhyaya, one of the accepted candidates for by-election from the Burdwan Division Non-Muhammadan Rural constituency of the Indian Legislative Assembly, has filed, on the 4th March 1935, his return of election expenses and the declaration in respect thereof as required by rule 19, clauses (*1*) and (*3*) respectively of the Legislative Assembly Electoral Rules. They can be inspected in the office of the Commissioner of the Burdwan Division, Chinsura, on payment of a fee of one rupee between the hours of 11 a.m. and 3 p.m. for one week from the date of publication of this notification in the gazette, or from the 22nd March 1935, whichever is later.

L. B. BURROWS, *Returning Officer, Burdwan Division Non-Muhammadan Rural Constituency of the Indian Legislative Assembly.*

Birbhum, the 13th March 1935.

No. 5L.S.-G.—It is hereby notified for general information that, under section 13 of the Bengal Village Self-Government Act, 1919 (Bengal Act V of 1919), read with rule 36 of the rules for the election and appointment of members of union boards, etc., Babu Pramatha Nath Das has been appointed by me to be a member of the Sirsa union board in Illambazar police-station in the Sadar subdivision of the district of Birbhum, *vice* Babu Hrishi Kesh Das, deceased.

No. 6L.S.-G.—It is hereby notified for general information that, under section 13 of the Bengal Village Self-Government Act, 1919 (Bengal Act V of 1919), read with rule 36 of the rules for the election and appointment of members of union boards, etc., Babu Byomkesh Mondal has been appointed by me to be a member of the Chorkalgram union board in Nanur police-station in the Sadar subdivision of the district of Birbhum, *vice* Babu Satish Chandra Mondal, deceased.

K. B. MALLIK, for *District Magistrate.*

Birbhum, the 21st March 1935.

No. 8L. S.-G.—It is hereby notified for general information that—

(*a*) Under sub-section (*2*) of section 6 of the Bengal Village Self-Government Act, 1919 (Bengal Act V of 1919), the following gentlemen have been duly elected to be members of the Baraturigram union board in Maureswar police-station in the Rampurhat subdivision of the Birbhum district:—

Ward No. I.

Babu Janardan Mondal.
Munshi Md. Nibu Mallik.
Babu Bhim Chakravarty.

Ward No. II.

Babu Hari Pada Banerjee.
Babu Ashutosh Ghoshal.
Munshi Kasem Ali.

(*b*) Under sub-section (*3*) of section 6 of the Act, the following gentlemen have been nominated to be members of the aforesaid union board:—

Babu Indra Narayan Das.
Munshi Matabbar Sheikh.
Babu Binodi Lal Banerjee.

No. 2677J.—The following revised constitution of the managing committee of the Birbhum Zilla School is published for general information in supersession of the notification published in the *Calcutta Gazette* on the 3rd May 1934:—

The Magistrate of Birbhum, President (*ex-officio*).
The Headmaster, Birbhum Zilla School, Vice-President and Secretary (*ex-officio*).
Babu Subodh Kumar Ghose, Subdivisional Officer, Suri, member (an official other than an inspecting officer of the Education Department).
Babu Amita Ranjan Mukherjee, member (guardians' representative).
Maulvi Syed Mahbub Abdul Jal, member (guardians' representative).
Babu Kumud Nath Sen, M.A., B.T., Assistant Headmaster, Birbhum Zilla School, member (teachers' representative).

K. L. MOOKERJI, *District Magistrate.*

Chinsura, the 23rd March 1935.

No. 2581J.G.—It is hereby notified for general information that—

(*a*) Under sub-section (*2*) of section 6 of the Bengal Village Self-Government Act, 1919 (Bengal Act V of 1919), the following gentlemen have been duly elected to be members of the Rajyadharpur union board in police-station Serampore in the Serampore subdivision of the Hooghly district:—

Ward No. I.

Babu Satish Chandra Biswas.
Babu Sadhan Chandra Ghose.
Babu Anath Nath Ghose.

Ward No. II.

Babu Dhirendra Nath Chakravartty.
Babu Mihir Lal Bakuli.
Shaikh Syed Buksh Mandal.

(*b*) Under sub-section (*3*) of section 6 of the Bengal Village Self-Government Act, 1919 (Bengal Act V of 1919), the following gentlemen have been appointed by the undersigned to be members of the Rajyadharpur union board:—

Maulvi Shaik Anwar Ali.
Babu Haran Chandra Chakravartty.
Babu Santosh Kumar Ghose.

D. MACPHERSON, *District Magistrate.*

Orders by the Deputy Inspector-General of Police, Burdwan Range.

Chinsura.—No. 1716.—14th March 1935.—Babu Dol Gobinda Mukharji, officiating Inspector, Birbhum, will continue to act as such, *vice* Babu Shailesh Chandra Sinha, Inspector, Birbhum, transferred temporarily to the District Intelligence Branch, 24-Parganas, while employed in the Intelligence Branch.

Babu Ram Ranjan Mukharji, Inspector, Midnapore, is granted 3 months' leave on average pay, on medical certificate, under rule 81 (*b*) (*ii*) of the Fundamental Rules, in extension of the leave granted to him under notification—Chinsura—No. 6128—5th October 1934, published in the *Calcutta Gazette*, dated the 25th October 1934.

The existing acting arrangement (*vide* notification No. 6372, dated the 26th October 1934, published in *Calcutta Gazette*, dated the 8th November 1934) will continue.

Sub-Inspector Kshitish Chandra Ghosh of Howrah, is appointed to act as Inspector, Midnapore, *vice* Maulvi Muzaffar Ali Khan, Inspector, Midnapore, appointed to act as Deputy Superintendent of Police.

This cancels notification No. 998, dated the 7th February 1935, published in the *Calcutta Gazette*, dated the 21st February 1935, so far as it relates to the appointment of Babu Jatindra Mohan Sen Gupta in the above vacancy.

Sub-Inspector Kalipada Thakur of Midnapore, is appointed temporarily to act as Inspector in the above vacancy from the date on which he assumes charge to the date on which he is relieved by Babu Kshitish Chandra Ghosh of Howrah.

The transfer involved in the above order is effected in the interests of public service.

Sub-Inspector Charu Chandra Mazumdar of Howrah, is appointed to act as Inspector, Burdwan, *vice* Maulvi Yakub Ali Khan, Inspector, removed from service.

Babu Surjya Narayan Ray, who is at present acting as Inspector in the above vacancy, will, on relief, revert to his substantive rank in Bankura.

The transfers involved in these orders are effected in the interests of public service.

H. C. HUNT,
Deputy Inspector-General of Police (offg.).

Chittagong Division—Chittagong.

No. 1319G.—14th March 1935.—It is hereby notified for general information that, under rule 20 (*b*) of the rules for the management of hospitals and dispensaries in Bengal, the gentlemen and officers named below have been appointed by the Comilla Municipality to be members of the managing committee of the Sadar dispensary at Comilla in the district of Tippera:—

The District Magistrate (*ex-officio*).
The Subdivisional Officer, Sadar (*ex-officio*).
The Civil Surgeon, Tippera (*ex-officio*).
Rai Bhudhar Das Bahadur, Chairman, Comilla Municipality.
Maulvi Syed Ihtisham Haider Choudhury, Vice-Chairman, Comilla Municipality.
Babu Pramoda Ranjan Bhattacharjee, representing His Highness the Maharaja Manikya Bahadur of Tripura.
Rai Upendra Mohan Mitter Bahadur, M.C.
Maulvi Abdul Hamid, M.C.
Khan Bahadur Maulvi Abidur Reza Choudhury, Chairman, district board, Tippera.
Maulvi Fariduddin Ahmed, Vice-Chairman, district board, Tippera.
Maulvi Syed Osman Haider Choudhury, M.L.C.
Maulvi Mafizuddin Ahmed, member, district board, Tippera.

No. 1331G.—18th March 1935.—Maulvi Quazi Mahabbat Ali, Sub-Deputy Collector and Circle Officer, Sundip, Noakhali, is allowed leave on average pay for three days, under rule 81(*b*) (*ii*) of the Fundamental Rules, with effect from the 20th December 1934.

Corrigendum. — No. 1340G. — 18th March 1935.—*Add* "Babu Ramesh Chandra Some, Vice-Chairman, local board, Chandpur," to the notification No. 6429G., dated the 22nd December 1934, below "Babu Kula Chandra Bose, Muktear," published at page 11 of the *Calcutta Gazette* of the 3rd January 1935.

H. J. TWYNAM, *Commissioner.*

Comilla, the 19th March 1935.

No. 2347M.—It is hereby notified for general information that, under section 13 of the Bengal Village Self-Government Act, 1919, read with section 6, clause (*3*) and rule 36 of the rules for the election and appointment of members of union boards, Babu Baikuntha Behary Shaha, son of late Babu Bhagaban Chandra Shaha, of Sankradhala, police-station Nasirnagor, has been appointed as a member of the Haripur union board in thana Nasirnagor in the Brahmanbaria subdivision of the district of Tippera, *vice* Babu Krishna Prasad Roy Choudhury, resigned.

A. HYE, *District Magistrate.*

Orders by the Deputy Inspector-General of Police, Bakarganj Range.

Barisal. — No. 1262.—14th March 1935.—Maulvi Qazi Abdul Naim, officiating Inspector, Bakarganj, is granted 4 months' leave on average pay, under rule 81 (*b*) (*ii*) of the Fundamental Rules.

Sub-Inspector Erfanuddin Ahmad of Bakarganj, is appointed to act as Inspector, *vice* Khan Sahib Altafuddin Khan, Inspector, Bakarganj, acting as Deputy Superintendent of Police.

G. H. MANNOOCH,
Deputy Inspector-General of Police (offg.).

Dacca Division—Dacca.

No. 1274J.—13th March 1935.—Maulvi Mafizuddin Fakir, Sub-Deputy Collector, on leave, who has been posted to the Dacca Division in Government notification No. 2504A., dated the 6th March 1935, is appointed to be Circle Officer of Kishoreganj Circle in the district of Mymensingh.

No. 1306J.—14th March 1935.—It is hereby notified for general information that, under rule 63 (*2*) of the Bengal Jail Code, 1919, Miss Mair Davies, Baptist Mission, Dacca, Mrs. P. K. Bose and Maulvi Abul Hasnat Ahmed are appointed to be non-official visitors of the Dacca Central Jail for a period of two years with effect from the date of this notification.

No. 1323J.—18th March 1935.—Babu Benoy Bhusan Chaudhuri, Sub-Deputy Collector, Netrakona, in the district of Mymensingh, is allowed leave on average pay for six weeks, under rule 81(*b*) (*ii*) of the Fundamental Rules, with effect from the 4th March 1935.

W. H. NELSON, *Commissioner.*

Faridpur, the 11th March 1935.

No. 2522J.—It is hereby notified for general information that, under section 13 of the Bengal Village Self-Government Act (Act V of 1919), Babu Nagendra Nath Dutta has been appointed to be a member of the Kendua union board in police-station Madaripur in the Sadar subdivision of the Faridpur district, *vice* Babu Jnanendra Mohan Bose, resigned.

Faridpur, the 14th March 1935.

No. 2581J.—It is hereby notified for general information that, under section 13 of the Bengal Village Self-Government Act (Act V of 1919), Babu Surja Kanta Baidya has been duly elected to be a member of the Ramjanpur union board in police-station Kalkini in the Madaripur subdivision of the Faridpur district, *vice* Munshi Golam Ali Howladar, removed.

A. E. PORTER, *District Magistrate.*

Orders by the Deputy Inspector-General of Police, Dacca Range.

Dacca.—No. 1060.—14th March 1935.—Babu Shashadhar Biswas, Inspector, Mymensingh, was allowed privilege leave from the 23rd November 1934 to the 26th December 1934, both days inclusive.

In partial modification of the orders already published, Babu Shashadhar Biswas, Inspector, Mymensingh, is granted 2 months and 27 days' privilege leave and one month and 3 days' commuted furlough on average salary, on medical certificate, with effect from the 14th January 1935.

R. M. WRIGHT,
Deputy Inspector-General of Police

Presidency Division—Calcutta.

No. 459M.—14th March 1935.—In exercise of the powers conferred by section 50 of the Bengal Municipal Act, 1932 (Bengal Act XV of 1932), it is hereby notified for general information that Babu Ram Prosad Sao has been duly elected Vice-Chairman of the Bhatpara Municipality in the district of the 24-Parganas to fill the temporary vacancy caused by the absence on leave of Rai Sahib Dasarathi Bhattacharyya.

No. 526L.S.-G.—18th March 1935.—It is hereby notified for general information that, under rule 23 of the dispensary manual, Babu Gunasindhu Mistry has been appointed a member of the managing committee of the Maghia Charitable Dispensary in Khulna, in place of Babu Nityananda Biswas, resigned.

No. 562L.S.-G.—21st March 1935.—It is hereby notified for general information that, under rule 23 of the dispensary manual, Maulvi Nasiruddin Khan and Babu Benoy Bhusan Banerjee have been appointed to be members of the managing committee of the Haringhatta Charitable Dispensary in the district of Nadia, in place of Babu Bishad Kumar Bose, removed, and Maulvi Fatehzul Khan, deceased, respectively.

A. J. DASH, *Commissioner (offg.)*.

Khulna, the 13th March 1935.

It is hereby notified for general information that, under section 13 of the Bengal Village Self-Government Act, 1919 (Bengal Act V of 1919), read with rule 36 of the election rules of the said Act, Babu Birendra Kumar Ray of Chunkuri has been appointed by me to be a member of the Dacope union board in police-station Dacope in the vacancy caused by the death of Babu Tarak Chandra Mandal in Sadar subdivision in the district of Khulna.

B. SARKAR, *District Magistrate*.

Jessore, the 18th March 1935.

It is hereby notified for general information that, under section 13 of the Bengal Village Self-Government Act, 1919 (Bengal Act V of 1919), read with rule 36 of the rules for the election and appointment of members of union boards, etc., Babu Nalini Kanta Mitra has been appointed by the District Magistrate, Jessore, to be a member of Kalora union board in police-station Narail in the Narail subdivision of the Jessore district, *vice* Babu Benoy Bhushan Chakervarty, removed.

It is hereby notified for general information that, under section 13 of the Bengal Village Self-Government Act, 1919 (Bengal Act V of 1919), read with rule 36 of the rules for the election and appointment of members of union boards, etc., Khondker Shahadat Ali has been appointed by the District Magistrate, Jessore, to be a member of Ward No. 1 of Narail union board in police-station Narail in the Narail subdivision of the Jessore district, *vice* Maulvi Abdul Majed Sikder, B.L., deceased.

Jessore, the 19th March 1935.

It is hereby notified for general information that, under section 13 of the Bengal Village Self-Government Act, 1919 (Bengal Act V of 1919), read with rule 36 of the rules for the election and appointment of members of union boards, etc., Babu Shyam Lal Saha (Senior No. I). has been appointed by the District Magistrate of Jessore to be a member of Singia Harighara union board in police-station Narail in the Narail subdivision in the district of Jessore, *vice* Babu Tarok Nath Chakravarty, removed.

M. F. KARIM, *District Magistrate*.

Alipore, the 19th March 1935.

No. 24/35-14-V.S.-G. — In notification No. 24/35-9-V.S.-G., dated the 5th March 1935, published at page 566, Part I of the *Calcutta Gazette* of the 14th March 1935, under sub-section (*3*) of section 6 of the Bengal Village Self-Government Act (Bengal Act V of 1919) regarding appointment of members of Ganipur union board in police-station Mahestala of Sadar subdivision of the 24-Parganas district, *for* Munshi Badur Raschid *read* Munshi Abdur Raschid.

S. N. RAY, *Addl. District Magistrate*.

Nadia, the 22nd March 1935.

It is hereby notified under section 20 of the Calcutta Survey Act, 1887 (Bengal Act I of 1887), for general information that the map, proceedings, awards and all other documents connected with the survey of the municipal area of Birnagar have been deposited on 8th March 1935 in the municipal office of Birnagar.

Any person interested in the survey may, at any time within two months from the date of deposit, inspect such documents free of charge and lodge objections, if there be any, with the Superintendent of Survey appointed under Bengal Government notification No. 3044M., dated the 20th July 1932.

A. REZA, *Subdivisional Officer, Ranaghat, and Superintendent of Survey of Birnagar Municipality.*

The 22nd March 1935.

It is hereby notified for general information that the following gentlemen have been elected as members of the managing committee of the Taki Government High English School with effect from the 12th December 1934, and that the committee has been approved by the Magistrate, 24-Parganas, in his No. F. 229-36-34, dated the 18th January 1935:—

The Subdivisional Officer, Basirhat, President (*ex-officio*).

The Head Master, Taki Government High School, Vice-President and Secretary (*ex-officio*).

Babu Abani Ranjan Sen Gupta, B.A., B.T., Assistant Head Master, Taki Government School, representative of the teaching staff.

Khan Bahadur A. F. M. Abdur Rahman, M.L.C., Basirhat, non-official member as representative of parents and guardians.

Raya Satyendra Nath Choudhury, Zemindar, Taki, non-official member as representative of parents and guardians.

Babu Amulya Bhusan Mukherjee, M.A., Circle Officer, Basirhat, member (*ex-officio*), an officer other than an inspecting officer of the Education Department.

B. DAS GUPTA, for *President.*

Orders by the Deputy Inspector-General of Police, Presidency Range.

Calcutta.—No. 1961-62.—18th March 1935—Khan Sahib Subadar Gulab Khan, Armed Inspector, Nadia, is granted 2 months and 15 days' leave on average pay, under rule 81 (*b*) (*ii*) of the Fundamental Rules, with effect from the 1st April 1935.

Armed Sub-Inspector Sita Ram Singh of Khulna, is appointed to act as Armed Inspector, Nadia, in the vacancy.

L. H. BURTON,
Deputy Inspector-General of Police.

Rajshahi Division—Jalpaiguri.

No. 859J.—12th March 1935.—Babu Saroj Ballav Biswas, Sub-Deputy Collector, Dinajpur Sadar, is transferred to the Thakurgaon subdivision of that district to work in the general line.

The transfer is made in the public interest.

No. 863J.—12th March 1935.—Maulvi Saiyid Abdul Ali, Sub-Deputy Collector, Rajshahi Division, is posted to Setabganj Circle in the district of Dinajpur to work as Circle Officer.

The posting is made in the public interest.

No. 868J. — 12th March 1935. — Babu Nagendra Nath Mazumder, Sub-Deputy Collector and Circle Officer, Setabganj, is transferred to Dinajpur Sadar to work in the general line.

No. 810M.—13th March 1935.—In exercise of the power conferred on me by section 19 (*2*) of the Bengal Local Self-Government Act (Bengal Act III of 1885), I hereby appoint Maulvi Hazi Abdul Hamid as a member of the Boalia local board in the district of Rajshahi, *vice* Khondakar Muhammad Abdul Hamid, deceased.

No. 963J.—14th March 1935.—Babu Naresh Chandra Chaudhuri, Sub-Deputy Collector, Darjeeling, is transferred temporarily to the Joypurhat Circle of the Bogra district to work as Circle Officer.

The transfer is made in the public interest.

No. 972J.—18th March 1935.—Babu Amarendra Nath Bhattacharjee, Sub-Deputy Collector, Naogaon, Rajshahi, is allowed leave on average pay for three days, with effect from the 16th April 1935, under rule 81(*b*) (*ii*) of the Fundamental Rules.

No. 979J.—19th March 1935.—It is hereby notified for general information that, under rule 20 (*b*) of the manual of rules for the management of charitable hospitals and dispensaries under the supervision of the Government of Bengal, the following gentlemen are appointed to be members of the committee for the management of the charitable hospital and dispensary at (1) Godagari, (2) Chowgram, (3) Bhandarpur, (4) Kamargaon, (5) Pananagar, (6) Tanor, (7) Hatmadhnagar, (8) Gurudaspur, (9) Nandigram, (10) Panchupur, (11) Kaligram, (12) Dhanaidaha, (13) Pakri, (14) Nawhatta, (15) Mohanpur, (16) Madaripur, (17) Dangapara, (18) Nasaratpur, (19) Mohanganj, (20) Raninagar and (21) Walia, in the district of Rajshahi:—

Godagari.

Babu Durgaram Bhakat.
Babu Biswanath Roy.
Babu Debidas Mondal.
Babu Adyanath Majumdar.
Munshi Inu-Uddin Mondal.

Haji Md. Abdul Jalil Biswas.
Babu Ram Avatar Shahu.
Dhiman Chandra Ray.
Munshi Shadekulla Sheikh.

Chowgram.

Maulvi Muhammad Jasmatulla.
Babu Surendra Nath Ghosh.
Babu Muralidhar Chakravartty.
Babu Bijoy Chandra Karmakar.
Babu Nagendra Nath Sanyal.
Babu Jatindra Mohan Bagchi.
Babu Hara Chandra Saha.
The Subdivisional Officer, Nator (*ex-officio*).
The Head Master, Chowgram H. E. School (*ex-officio*).

Bhandarpur.

Babu Dwijendra Chandra Chaudhuri.
Md. Bona Mondal.
Babu Girindra Chandra Majumdar.
Babu Broja Sundar Chakravarty.
Babu Broja Gopal Lahiri.
Babu Mohim Chandra Sen.
Dr. Mahammad Monsur Ali.
Md. Hasiruddin.
Md. Anaruddin.

Kamargaon.

Babu Fakir Chandra Kolley.
Babu Aditya Nath Chaudhuri.
Md. Sahabatali Mridha.
Md. Nazrulla Mondal.
Babu Bon Behari Banerjee.
Babu Aparna Prosad Mukherjee.
Babu Khagendra Nath Bose.
Babu Kalipada Chakravarty.
Babu Jyotish Chandra Chakravarty.

Pananagar.

Haji Md. Osman Ghani Meah.
Babu Kumud Nath Chakravarty.
Babu Panchanan Sarker.
Babu Ramendra Nath Roy.
Md. Aseruddin Sarker.
Babu Lalit Mohan Das.
Md. Uziruddin Khan.
Md. Dianatulla Mondal.
Md. Nirajuddin Mondal.
Babu Shashi Bhusan Biswas.
Md. Reajuddin Khan.
Md. Meheruddin Mridha.

Tanor.

Babu Mahendra Nath Sarker.
Babu Tarapada Singha.
Babu Kedar Nath Biswas.
Babu Bidhu Bhusan Moitra.
Babu Pramatha Nath Sarker.
Babu Shibdas Malakar.
Md. Sabiruddin Mondal.
Babu Nabadwip Chandra Sarker.
Babu Pramatha Nath Nandi.
Md. Ebadulla Sarker.
Md. Taherulla Kaviraj.
Babu Karuna Kanta Sarker.

Hatinadhnagar.

Munshi Molla Jan Mahammad.
Md. Shamiruddin Meah.
Munshi Md. Baharulla Mondal.
Mahammad Samas Ali Pramanik.
Mahammad Haji Asgar Ali Mondal.
Babu Purna Chandra Sarker.
Md. Maharum Pramanik.
Babu Radha Charan Pramanik.
Haji Jabed Ali Mollah.
Khondker Abdus Sobhan.
Babu Sreeram Chandra Pramanik.
Haji Mahammad Ali Pramanik.

Gurudaspur.

Babu Sarat Chandra Sarker.
Babu Jogendra Nath Sen.
Babu Ramani Bhusan Roy.
Babu Harendra Nath Moitra.
Babu Rasaraj Kundu.
Babu Bireswar Majumdar.
Md. Umiruddin Molla.
Md. Basiruddin Sarker.
Md. Abdul Hamid Meah.

Nandigram.

The Sub-Inspector of Police, Nandigram (*ex-officio*).
Munshi Kabul Uddin Mondal.
Munshi Mafizuddin Akhanda.
Babu Sreecharan Sarkar.
Babu Dinabandhu Sarkar.
Babu Debendra Nath Sinha.
Khan Chaudhuri Kafiluddin Ahmed.
Md. Alam Pramanik.
Md. Kismatulla Pramanik.
Md. Abdus Sobhan Akhanda.
Babu Mutsuddi Lal Agarwalla.

Panchupur.

Babu Harinath Moitra.
Babu Nanigopal Saha.
Md. Bakher Ali Khondker.
Haji Rupai Mondal.
Babu Provash Chandra Saha.
Babu Mahendra Nath Saha.
Nabiruddin Pramanik.
Md. Sadaruddin Pramanik.
Md. Manik Mondal.

Kaligram.

Babu Jogendra Kumar Mukherjee.
Babu Upendra Nath Moitra.
Babu Hemanta Kumar Phani.
Babu Kaliranjan Talukdar.
Babu Kaliranjan Acharjee.
Babu Narendra Nath Ghattak.
Munshi Mahammad Jamiruddin Shah.
Munshi Mahammad Kismatulla Sarker.
Munshi Md. Atar Hossain Pramanik.
Munshi Md. Bhelu Uddin Pramanik.
Munshi Md. Khoda Baksha Dewan.
Munshi Md. Haji Samiruddin Pramanik.

Dhanaidaha.

Mr. M. Ashraf Ali Khan Chaudhuri, Bar.-at-Law.
Munshi Dabiruddin Amin.
Md. Enat Ali Sarker.
Md. Shamsur Rahman Khan.
Md. Jowhar Ali Meah.
Md. Nasimuddin Sarker.
Md. Mayezuddin Pramanik.
Md. Imanuddin Mondal.
Babu Sasadhar Kundu.
Babu Surendra Nath Majumdar.
Babu Kunja Lal Sarker.
Babu Ananda Gobinda Chaudhuri.

Pakri.

Haji Manikulla Sheikh.
Md. Amiruddin Sheikh.
Md. Naderali Sarkar.
Md. Hayetulla Sheikh.
Md. Faratulla Mondal.
Nur Muhammad Mondal.
Jesarat Mondal.
Babu Jharulal Singha.
Babu Rakhal Chandra Mondal.
Maulvi Misrulla Sarker.
Maulvi Lisbar Khan.
Maulvi Jiaruddin Biswas.

Nawhatta.

Babu Jatindra Nath Mani.
Babu Rajani Kanta Mondal.
Babu Hare Krishna Mondal.
Babu Akhil Behari Mondal.
Babu Rajani Mohan Biswas.
Maulvi Ahmed Ali Khan.
Maulvi Sariatulla Sarker.
Maulvi Abdul Sobhan Khan.
Maulvi Osman Ali Sarker.
Maulvi Abdul Aziz Sarker.

Mohanpur.

The Officer in charge of Mohanpur police-station (*ex-officio*).
Molla Mahammad Kasimuddin.
Rasul Mahammad Mondal.
Md. Nurul Islam Mondal.
Babu Ishan Chandra Sarker.
Babu Kshetra Nath Majumdar.
Babu Shambhu Nath Saha.
Maulvi Md. Fazaluddin Saha.
Md. Abdul Karim Saha.
Md. Osman Ali Sarkar.
Md. Jan Mahammad Sarkar.

Madaripur.

Babu Narendra Nath Moitra.
Babu Trailokya Nath Sarker.
Babu Debendra Nath Pramanik.
Munshi Mahiuddin Mridha.
Babu Abhaya Charan Lahiri.
Babu Satish Chandra Chowdhuri.
Md. Asgar Ali Sarkar.
Md. Basiruddin Dewan.
Md. Sarabdi Mondal.

Dangapara.

Babu Birendra Nath Saha.
Babu Anadi Nath Chaudhury.
Babu Jaynath Chaudhuri.
Babu Ambika Charan Chaudhuri.
Babu Amulya Madhab Chaudhuri.
Khandker Fakiruddin.
Munshi Md. Delsad Ali Pramanik.
Md. Ersad Ali Sheikh.
Haji Jahiruddin Mean.
Babu Ajit Mohan Chaudhuri.
Babu Birendra Nath Chaudhury.
Babu Kumarjit Mohan Chaudhuri.

Nasaratpur.

Babu Krishna Sundar Ray.
Babu Shyam Sundar Roy.
Babu Kali Sundar Roy.
Babu Satish Chandra Bhowmik.
Md. Osimuddin Kazi.
Babu Jitendra Narayan Bagchi.
Babu Manindra Nath Chakravarty.
Babu Krishnendra Narayan Lahiri.
Md. Gol Mahammad Mondal.
Babu Lalit Chandra Bhattacharjya.
Shah Mahammad Tasiruddin.
Babu Himangsu Shekhar Chakravarty.

Mohanganj.

Munshi Aseruddin Mollah.
Haji Nafiruddin Sardar.
Munshi Keramat Ali Khan.
Babu Mohini Mohan Das.
Nasiruddin Shaha.
Munshi Danesh Mahammad.
Eusuf Ali Sardar.
Babu Hanuman Baksha Agarwalla.
Mahammad Ali Mridha.

Raninagar.

Khan Sahib Maulvi Muhammad Afzal.
Maulvi Muhammad Abbas Ali.
Maulvi Nizamuddin Ahmed.
Maulvi Mahammad Aftab Hossain.
Maulvi Niamat Ali Mondal.
Haji Mafizuddin Mondal.
Babu Chandra Madhab Saha.
Babu Hanuman Baksha Agarwalla.
Maulvi Muhammad Maizuddin Meah.

Walia.

Md. Mamtazuddin Amin.
Md. Siddique Ali Meah.
Md. Hasen Ali Mridha.
Babu Purna Chandra Sarker.
Syeduddin Ahmed.
Fakir Muhammad Sarkar.
Maniruddin Sarkar.
Babu Nakul Chandra Sarkar.
Babu Tarani Mohan Sarkar.
Babu Benode Behari Sarkar.

F. W. ROBERTSON, *Commissioner.*

Dinajpur, the 21st March 1935.

No. 1813J.—It is hereby notified for general information that—

(*a*) Under sub-section (*2*) of section 6 of the Bengal Village Self-Government Act, 1919 (Bengal Act V of 1919), the following gentlemen have been duly elected to be members of the undermentioned union boards in the Thakurgaon subdivision of the Dinajpur district:—

Police-station Thakurgaon.

I—Senihari union board.

Maulvi Naimuddin Ahmed.
Munshi Ran Muhammed.
Babu Surendra Nath Sen.
Munshi Ajmat Ali Sarkar.
Munshi Ashiruddin Sarkar.
Munshi Mahijuddin Sarkar.

II—Akhanagar union board.

Maulvi Pear Ali Sarkar.
Munshi Baka Muhammed.
Babu Hriday Nath Roy.
Babu Ashar Singh Mondal.
Maulvi Aftabar Rahman Chaudhury.
Munshi Ful Muhammed.

III—Dakshin Rajagaon union board.

Munshi Alimuddin Sarkar.
Babu Ganganarayan Singha.
Babu Dhul Chand Gir.
Babu Ananta Kumar Sil.
Babu Bahal Chandra Singha.
Babu Kali Mohan Mondal.

IV—Debipur union board.

Maulvi Muhammed Hussain.
Maulvi Tarabuddin Mondal.
Maulvi Nural Islam *alias* Pashleuddin.
Munshi Hesanuddin Sarkar.
Munshi Nabibaksh Sarkar.
Babu Bibi Ram Sarkar.

V—Balia union board.

Babu Behari Lal Prodhan.
Babu Prosanna Kumar Das.
Munshi Khala Katu.
Munshi Jibantulla Sarkar.
Munshi Bhadru *alias* Najarullah Muhammad.
Munshi Gajamuddin Md.

VI—Kesurbari union board.

Munshi Md. Danesh Sarkar.
Munshi Keramuddin Sarkar.
Babu Kali Mohan Roy.
Munshi Mafijuddin Sarkar.
Babu Lalit Mohan Nag.
Munshi Nabibaksh Sarkar.

VII—Thakurgaon union board.

Babu Ramesh Chandra Majumdar.
Babu Hareklal Sarkar.
Munshi Ashiruddin Sarkar.
Maulvi Ajiruddin Ahmed.
Maulvi Md. Saifuddin.
Munshi Mafijuddin Sarkar.

VIII—Chilarang union board.

Haji Amir Muhammed.
Munshi Md. Abdur Rahaman.
Munshi Dhan Muhammed.
Babu Satish Chandra Roy.
Babu Duswasan Roy.
Munshi Mehar Ali Sarkar.

IX—Raipur union board.

Maulvi Elajuddin Ahmed.
Munshi Md. Osman Ali.
Munshi Kamaruddin.
Babu Birij Lal Sarkar.
Babu Bhuluk Ram Mondal.
Munshi Parimuddin Sarkar.

X—Hariharpur union board.

Babu Nil Ratan Khan Chaudhuri.
Babu Dwijendra Nath Chaudhuri.
Munshi Alimuddin Ahmed.
Maulvi Abdul Mannaf.
Munshi Ashitullah Sarkar.
Munshi Makimuddin Ahmed.

XI—Jamalpur union board.

Maulvi Dabiruddin Ahmed.
Munshi Mukshed Ali Sarkar.
Munshi Samiruddin Sarkar.
Maulvi Sujadhar Rahaman.
Munshi Asanuddin Ahmed.
Maulvi Hemailuddin Ahmed Chaudhury.

XII—Nargoon union board.

Munshi Khadabullah Sarkar.
Munshi Jashiruddin Mondal.
Babu Prasanna Kumar Sarkar.
Maulvi Rasulbaksh Talukdar.
Munshi Hasandi Muhammad Sarkar.
Munshi Pir Muhammed Sarkar.

XIII—Nischintapur union board.

Maulvi Md. Amirullah.
Munshi Balmat Sarkar.
Munshi Kushumaddin Sarkar.
Munshi Ataor Rahaman.
Munshi Dhanbar Md.
Munshi Kader Ali Sarkar.

XIV—Salandar union board.

Munshi Kifaitulla Sarkar.
Babu Bhona Ram Sarkar.
Munshi Hashiruddin Sarkar.
Munshi Md. Nurbaksh Chaudhury.
Munshi Hagdal Ali Mia.
Babu Dakhina Ranjan Bose.

XV—Kachubari union board.

Munshi Majeruddin Sarkar.
Babu Dhani Charan Barman.
Munshi Md. Kaimuddin Sarkar.
Munshi Jhabar Saha.
Babu Chandra Saha.
Haji Majiruddin Sarkar.

XVI—Sukhan-Pukhari union board.

Babu Debendra Nath Ghose.
Babu Chandra Kumar Prodhan.
Babu Khir Nath Ghose.
Babu Manindra Nath Das.
Babu Rajendra Nath Sarkar.
Babu Kanai Lal Das.

XVII—Gopalpur union board.

Babu Mohit Kumar Sen *alias* Kali Babu.
Babu Rajeswar Sarkar.
Babu Haraballav Sarkar.
Babu Kedar Nath Sarma Biswas.
Babu Rugra Lal Roy.
Munshi Bashiruddin Mia.

XVIII—Jagannathpur union board.

Babu Jagat Bandhu Chaudhury.
Munshi Nashiruddin Sarkar.
Babu Maidhyam Nath Roy.
Munshi Gafuruddin Sarkar.
Babu Makar Chand Barman.
Babu Bhusan Chandra Roy.

Police-station Atwari.

I—Dhamoir union board.

Munshi Md. Taribulla Sarkar.
Munshi Md. Khajimuddin Sarkar.
Munshi Pir Md. Sarkar.
Munshi Md. Matibar.
Munshi Md. Mobuluddin Sarkar.
Babu Mahat Ram Barman.

II—Mirzapur union board.

Maulvi Ahmed Hussain Sarkar.
Babu Mukh Chandra Barman.
Munshi Md. Jashiruddin.
Munshi Jitar Rahman.
Munshi Karimuddin Sarkar.
Munshi Hafezuddin Ahmed.

III—Tarea union board.

Munshi Farajuddin Sarkar.
Munshi Md. Reza Sarkar.
Munshi Mir Kafiluddin Ahmed.
Munshi Imaruddin Ahmed.
Munshi Rahimuddin Sarkar.
Munshi Safar Ali Sarkar.

IV—Balia union board.

Babu Bejoy Gopal Roy.
Babu Kaliprosad Roy.
Babu Chaitanna Sarkar.
Munshi Hakimuddin Ahmed.
Munshi Ejjat Ali Sarkar.
Munshi Mafijuddin Sarkar.

V—Radhanagar union board.

Munshi Md. Ismail Sarkar.
Munshi Darajuddin Sarkar.
Munshi Pajiruddin Sarkar.
Babu Haralal Barman.
Munshi Mahammaddin Sarkar.
Babu Dhumakanta Barman.

VI—Balarampur union board.

Babu Ramchandra Adhikari.
Babu Keshar Chandra Barman.
Babu Jogendra Nath Sarkar.
Munshi Abdul Majid Kabiraj.
Munshi Enayetulla Muhammed.
Munshi Md. Tafeluddin.

Police-station Baliadangi.

I—Paria union board.

Babu Khagendra Nath Seth.
Dr. Mahatabuddin Ahmed.
Maulvi Tamijuddin Ahmed.
Babu Dinesh Chandra Seth.
Munshi Julfakkar Ali.
Munshi Asrat Ali Sarkar.

II—Dhantala union board.

Munshi Sadaruddin Sarkar.
Babu Bhabesh Chandra Singha.
Babu Sreenath Sarkar.
Babu Naba Kumar Singha.
Babu Sambhunath Singha.
Babu Gaya Nath Sil.

III—Charole union board.

Babu Chhatra Nath Mondal.
Maulvi Tarabuddin Ahmed Chaudhury.
Maulvi Alimuddin Sarkar.
Babu Dhanpati Singha.
Maulvi Jalaluddin Ahmed.
Babu Hara Singha Sarkar.

IV—Barabari union board.

Maulvi Umar Ali Sarkar.
Maulvi Safiruddin Sarkar.
Babu Nilmani Singha Sarkar.
Munshi Kalu Mia *alias* Ajad Baksh.
Munshi Chaitu Mia *alias* Birjis Kadar Mia.
Munshi Jamiruddin Sarkar.

V—Amjankhore union board.

Babu Bibhisan Singha Sarkar.
Munshi Najar Md.
Maulvi Ahmed Ali Sarkar.
Babu Banka Lal Singha Sarkar.
Munshi Farjan Ali Sarkar.
Munshi Kesh Md. Sarkar.

VI—Palasbari union board.

Maulvi Sakhawat Hussain Sarkar.
Maulvi Majiruddin Ahmed.
Maulvi Mabarak Ali Sarkar.
Maulvi Dhanibulla Sarkar.
Maulvi Kajimuddin Mia.
Maulvi Fazlur Rahman Mia.

VII—Duo-Suo union board.

Munshi Sadar Md. Sarkar.
Maulvi Haji Muhammad.
Maulvi Dabiruddin Ahmed Chaudhuri.
Maulvi Ramjan Ali.
Munshi Ajaratddin Sarkar.
Munshi Danesh Ali Md.

VIII—Bhanore union board.

Maulvi Madhubulla Ahmed.
Maulvi Reajuddin Sarkar.
Maulvi Saharuddin Sarkar.
Maulvi Kazi Mohar Baksh.
Munshi Abdur Subhan.
Munshi Ajimuddin Sarkar.

Police-station Ranisankail.

I—Dharmagarh union board.

Munshi Umar Ali Sarkar.
Munshi Hajar Md. Sarkar.
Munshi Ashiruddin Sarkar.
Munshi Shaikh Samiruddin Ahmed.
Munshi Bhola Md. Sarkar.
Munshi Faziluddin Sarkar.

II—Kashipur union board.

Maulvi Meher Ali Sarkar.
Munshi Tashar Md. Sarkar.
Munshi Ale Muhammed Sarkar.
Munshi Raj Md. Sarkar.
Munshi Ashiruddin Sarkar.
Babu Lut Behari Das.

III—Bhabanandapur union board.

Maulvi Md. Abu Taher.
Munshi Islamuddin Ahmed.
Munshi Alimuddin Ahmed.
Munshi Mashratddin Ahmed.
Munshi Abdul Hussain.
Munshi Gafuruddin Ahmed.

IV—Raitore union board.

Babu Dharma Narayan Barma.
Munshi Samiruddin Chaudhuri.
Munshi Md. Easin.
Munshi Fazley Karim.
Babu Aghori Sarkar.
Munshi Tarabuddin Sarkar.

V—Bachore union board.

Munshi Serajuddin Sarkar.
Munshi Hukosh Ram Sarkar.
Babu Harek Lal Sarkar.
Babu Sankha Mohan Barma.
Babu Gopal Singha.
Babu Tatia Pali.

VI—Nanduar union board.

Maulvi Dr. Abu Zahed Ahmed.
Maulvi Majahar Ali Sarkar.
Maulvi Umar Ali.
Maulvi Sahadat Hussain.
Munshi Sakhiruddin Sarkar.
Munshi Umar Ali Ahmed.

VII—Routhnagar union board.

Babu Bistucharan Sarkar.
Babu Sardhan Chandra Barman.
Babu Ananta Kumar Roy.
Babu Ambika Charan Basak.
Babu Pitambar Chandra Roy Chaudhuri, B.A.
Babu Nanda Lal Barman.

VIII—Lehemba union board.

Babu Bandhu Ram Barma.
Maulvi Tamijuddin Ahmed.
Munshi Samsher Ali Sarkar.
Munshi Rahim Baksh Sarkar.
Munshi Khidmat Ali Ahmed.
Babu Matilal Sarkar.

Police-station Haripur.

I—Gedura union board.

Munshi Fajar Md. Sarkar.
Maulvi Maziruddin Sarkar.
Munshi Kumar Ali Sarkar.
Munshi Moula Baksh Sarkar.
Munshi Kamatu Sarkar.
Munshi Giyasuddin Talukdar.

II—Amgaon union board.

Maulvi Sahiruddin Sarkar.
Babu Lachman Singh.
Babu Kartik Kumar Das.
Babu Lal Mohan Das.
Babu Nanda Singha.
Munshi Fare Muhammed Sarkar.

III—Bakua union board.

Babu Jorjis Sarkar.
Munshi Baharuddin Ahmed.
Maulvi Muniruddin Ahmed.
Babu Khen Narayan Sarkar.
Babu Chhidam Sarkar.
Babu Prasadu Pal.

IV—Dangipara union board.

Maulvi Md. Saidar Rahman Choudhuri.
Maulvi Basiruddin Ahmed.
Babu Haguram Singh.
Maulvi Mahar Baksh Sarkar.
Maulvi Kafiluddin Ahmed.
Babu Kishori Mohan Roy.

V—Haripur union board.

Munshi Rajabali Sarkar.
Munshi Pir Md. Sarkar.
Babu Upendra Kumar Chandra.
Babu Naresh Chandra Mallik.
Babu Nagendra Behari Roy Choudhuri.
Munshi Ladai Muhammed Sarkar.

VI—Bhaturia union board.

Maulvi Md. Ismail.
Munshi Khasarat Ali Ahmed.
Munshi Amantulla Sarkar.
Munshi Md. Jamiruddin Sarkar.
Munshi Behentu Md.
Maulvi Kader Baksh Talukdar.

Police-station Pirganj.

I—Jongaon union board.

Babu Harilal Bhoumik.
Babu Dhandev Chandra Roy.
Maulvi Asur Muhammed.
Babu Hemanta Kumar Ghose.
Maulvi Md. Khorshed Ali.
Maulvi Kudarat Ali.

II—Khangaon union board.

Babu Bhabani Prasad Roy.
Babu Bhabak Ram Roy.
Babu Pravananda Barma.
Maulvi Khoir Md.
Maulvi Amiruddin Sarkar.
Babu Sandit Ramdeb Barman.

III—Begunbari union board.

Babu Matilal Sarkar.
Maulvi Md. Ali Sarkar.
Maulvi Darash Muhammed.
Maulvi Hakimuddin Sarkar.
Maulvi Zafuruddin Md.
Babu Sanatan Saha.

IV—Saidpur union board.

Maulvi Safar Md. Haji.
Babu Gosai Das.
Maulvi Naziruddin Saha.
Babu Keshab Chandra Sarkar.
Babu Kartik Chandra Sarkar.
Maulvi Khemajuddin Sarkar.

V—Kosharaniganj union board.

Babu Rajendra Kumar Chakravarty.
Babu Chandra Mohan Chakravarty.
Maulvi Abdul Aziz.
Babu Bharani Prasad Roy.
Babu Ramani Mohan Singha.
Babu Dhanu Saha.

VI—Pirganj union board.

Munshi Khadem Matiur Rahaman.
Munshi Dil Md. Sarkar.
Munshi Gafuruddin Ahmed.
Munshi Khorshed Ali.
Munshi Asham Ali.
Munshi Khairat Ali.

VII—Doulatpur union board.

Babu Jadab Chandra Saha.
Babu Ananda Nath Mandal.
Babu Kabirram Saha.
Munshi Ashiruddin Sarkar.
Babu Sohi Das Sarkar.
Munshi Darmain Ali.

VIII—Bhebra union board.

Munshi Pirbaksh Sarkar.
Munshi Sher Md. Mir.
Munshi Nabiruddin Sarkar.
Munshi Afijuddin Sarkar.
Munshi Samiruddin Sarkar.
Babu Indra Mohan Mohanta.

IX—Sengaon union board.

Munshi Nashiruddin Sarkar.
Babu Lal Chand Prodhan.
Munshi Mashiruddin Sarkar.
Babu Gendharu Mandal.
Munshi Safijuddin Sarkar.
Munshi Kurman Ali Sarkar.

X—Bandiara union board.

Babu Ramdurlav Sarkar.
Babu Baharuddin Sarkar.
Munshi Ful Muhammed Sarkar.
Maulvi Kader Baksh Choudhuri.
Babu Bhujendra Kumar Sarkar.
Babu Keshab Mandal.

XI—Bairchuna union board.

Munshi Ainuddin Ahmed.
Munshi Maniruddin Sarkar.
Munshi Dhan Muhammed Sarkar.
Munshi Kalua Mandal.
Babu Harendra Nath Saha.
Munshi Gani Muhammed Sarkar.

Police-station Bochaganj.

I—Nafanagar union board.

Munshi Taferuddin Sarkar.
Babu Jogesh Chandra Sarkar.
Maulvi Md. Khoka Mia.
Munshi Bhuban Ali Sarkar.
Babu Abalakanta Roy.
Babu Bijoy Kisore Singha.

II—Ishania union board.

Maulvi Hashimuddin Ahmed.
Maulvi Khasa Muhammed Sarkar.
Babu Kali Kumar Barman.
Maulvi Ehsen Ali.
Babu Madhusudhan Roy.
Maulvi Md. Eusuf Ali.

III—Mushidhat union board.

Maulvi Sheifuddin Ahmed.
Maulvi Naziruddin Sarkar.
Babu Baidya Nath Chakravarty.
Babu Gangaram Agarwala.
Maulvi Tasawar Hussain Sarkar.
Maulvi Aftabuddin Ahmed.

IV—Chandpur union board.

Babu Murari Mohan Das.
Babu Kantharan Singha.
Munshi Mukshed Ali Sarkar.
Babu Rupkanta Sarkar.
Babu Ishan Chandra Sarkar.
Babu Kanu Pali.

V.—Atgaon union board.

Munshi Choudhuri Md. Mashiruddin.
Maulvi Khaliluddin Ahmed Choudhuri.
Munshi Tul Muhammed Saha.
Munshi Keramat Ali Sarkar.
Munshi Jafaruddin.
Babu Chittaranjan Das.

VI—Chhatoil union board.

Munshi Jamiruddin Ahmed.
Babu Hem Chandra Sarkar.
Munshi Mashiruddin Mia.
Babu Monmohan Das.
Munshi Tashiruddin Sarkar.
Babu Tarak Chandra Das.

Police-station Birganj.

I—Shibrampur union board.

Babu Purbanarayan Barman.
Babu Dina Nath Barman.
Babu Ramani Mohan Barman.
Maulvi Samijuddin Sarkar.
Babu Baikuntha Nath Barman.
Munshi Amantulla Muhammed.

II—Palashbari union board.

Babu Joy Kanta Das.
Maulvi Jamaluddin Sarkar.
Babu Loke Nath Saha.
Babu Dhani Charan Mandal.
Babu Prollad Chandra Saha.
Maulvi Fazal Khan.

III—Satagram union board.

Munshi Kaimuddin Mandal.
Munshi Md. Saiyed Ali.
Munshi Mesh Muhammed.
Munshi Rahimuddin Sarkar.
Munshi Jamiruddin Ahmed.
Babu Mritunjoy Saha.

IV—Mohanpur union board.

Babu Narendra Nath Jhan.
Munshi Ferajtullah Sarkar.
Munshi Salimuddin Mandal.
Munshi Manu Muhammed.
Maulvi Elahi Baksh Choudhuri.
Munshi Fayezuddin Sarkar.

V—Maricha union board.

Babu Dadhi Nath Sarkar.
Maulvi Machhimuddin Choudhuri.
Maulvi Kadamali Choudhuri.
Maulvi Samseruddin Choudhuri.
Munshi Afir Md. Mandal.
Babu Radha Nath Roy.

VI—Pran Nagar union board.

Maulvi Gaferuddin Ahmed.
Babu Amir Chand Sarkar.
Babu Uma Kanta Mandal.
Munshi Amirtulla Saha.
Babu Mahan Barma.
Babu Kali Mohan Adhikari.

VII—Muhammadpur union board.

Maulvi Md. Ismail.
Babu Nani Gopal Mukherjee.
Maulvi Badaruddin Ahmed.
Babu Badang Barman.
Munshi Sher Ali.
Munshi Hasharuddin Ahmed.

VIII—Bhognagar union board.

Maulvi Md. Nasiruddin Sarkar.
Munshi Bafiruddin Sarkar.
Munshi Hefajuddin Ahmed.
Munshi Kalu Md. Sarkar.
Babu Binanda Chandra Roy.
Babu Harendra Narayan Roy.

IX—Sujalpur union board.

Maulvi Basiruddin Ahmed Choudhuri.
Maulvi Kaisaruddin Ahmed.
Maulvi Tafiruddin Ahmed.
Babu Gajendra Narayan Sarkar.
Babu Sambhunath Sarkar.
Maulvi Rahimuddin Mandal.

X—Nijpara union board.

Babu Gangadhar Roy Sarkar.
Munshi Asraf Ali Sarkar.
Babu Satyendra Nath Roy.
Munshi Jabbar Ali Sarkar.
Babu Darikanath Sarkar.
Munshi Danesh Ali Muhammed.

XI—Paltapur union board.

Maulvi Md. Usman Ali Khan.
Maulvi Sujat Ali Sarkar.
Subal Saha.
Dhadoi Mandal.
Munshi Iman Ali Saha.
Dulal Saha.

Police-station Kaharul.

I—Dabore union board.

Babu Kistaprosad Sarkar.
Munshi Jamiruddin Sarkar.
Babu Khargamohan Saha.
Harek Sarkar.
Babu Salukaram Sarkar.
Maulvi Tashiruddin Sarkar.

II—Rasulpur union board.

Babu Sarat Chandra Adhikari.
Babu Keshab Chandra Adhikari.
Ajimuddin Ahmed.
Babu Santaram Roy.
Babu Braja Nath Roy.
Babu Dinaram Saha.

III—Targaon union board.

Babu Shaba Mohan.
Maulvi Md. Hussain Choudhuri.
Munshi Sapi Mahammed.
Babu Phojdhuram Sarkar.
Maulvi Osman Ali.
Munshi Nunu Muhammed Sarkar.

IV—Mukundapur union board.

Munshi Amiruddin Sarkar.
Munshi Md. Saritulla Saha.
Munshi Jharu Mollah.
Munshi Surat Ali Sarkar.
Babu Tarak Nath Dutta.
Munshi Md. Sahadi Sarkar.

V—Ramchandrapur union board.

Babu Akalu Chandra Sarkar.
Munshi Dhanbar Saha.
Munshi Majoddin.
Babu Benimadhab Bania.
Maulvi Amiruddin.
Babu Bhairab Saha.

VI—Sundarpur union board.

Maulvi Alauddin Sarkar.
Maulvi Enayetulla Saha.
Illahi Baksh Saha.
Babu Ram Chandra Barman.
Munshi Jashir Saha.
Munshi Hajuddin Sarkar.

Police-station Khansama.

I—Alokjhari union board.

Babu Sachchidananda Roy.
Munshi Inanaddin Sarkar.
Munshi Mahabub Ali Sarkar.
Munshi Saley Mahud Saha.
Babu Durganath Majumdar.
Munshi Jenatulla Mandal.

II—Bhebra union board.

Babu Radha Gobind Sarkar.
Munshi Rahamali Sarkar.
Munshi Kana Muhammed Saha.
Munshi Hopetulla Choudhuri.
Munshi Asrafjan Sarkar.
Munshi Kina Muhammed.

III—Angarpara union board.

Munshi Kamantulla Saha.
Munshi Badiuddin Mandal.
Babu Hara Chandra Mandal.
Munshi Samiruddin Saha.
Munshi Gafuruddin Ahmed.
Munshi Hasarali Saha.

IV—Khamarpara union board.

Munshi Samshed Hussain.
Babu Kartik Chandra Sarkar.
Munshi Mahatabuddin Sarkar.
Babu Kali Mohan Saha.
Babu Pasaruddin Sarkar.
Babu Krishna Charan Saha.

V—Bhabki union board.

Munshi Daribulla Sarkar.
Babu Kokaram Roy.
Babu Kishori Chand Kuthari.
Munshi Khekra Muhammed Saha.
Dhan Mamun Sarkar.
Munshi Hajarbulla Saha.

VI—Goaldihi union board.

Munshi Barai Saha.
Munshi Saharuddin Sarkar.
Munshi Joshomuddin Sarkar.
Munshi Bhadu Mahammed Saha.
Munshi Earali Sarkar.
Munshi Majaraddin Sarkar.

(*b*) Under sub-section (*3*) of section 6 of the Bengal Village Self-Government Act, 1919 (Bengal Act V of 1919), the following gentlemen have been appointed by the District Magistrate of Dinajpur to be members of the undermentioned union boards in the Thakurgaon subdivision of the Dinajpur district:—

Police-station Thakurgaon.

I—Senihari union board.

Munshi Kafiluddin Sarkar of Mandaladam.
Munshi Bhakar Mohammad Sarkar of Mandaladam.
Babu Ramalu Barman Sarkar of Madhupur.

II—Akhanagar union board.

Babu Gour Lall Ray of Madhabpur.
Munshi Ijafar Hossain of Felanpur.
Munshi Tafar Mohammad Sarkar of Jhargaon.

III—Dakshin-Rajagaon union board.

Munshi Tamijuddin Mohammad of Uttar Batina.
Munshi Majiruddin Mohammad of Ashannagar.
Munshi Ahamuddin Sarkar of Rajagaon.

IV—Debipur union board.

Maulvi Mohammad Nejamuddin Khan of Darajgaon.
Babu Krishna Mohon Ray of Debipur.
Babu Kaichal Barman of Kalaswargaon.

V—Balia union board.

Maulvi Mohammad Hekmatulla Chowdhury of Balia.
Maulvi Mohammad Abdul Hossain Chaudhury of Balia.
Babu Kshetra Mohon Barman of Bagudadangi.

VI—Kesurbari union board.

Munshi Jamaluddin Ahmed Kaviraj of Kesurbari.
Munshi Darbar Khan of Khenpara.
Babu Baudia Nath Saha of Kesurbari.

VII—Thakurgaon union board.

Maulvi Mohammad Ismail of Akcha.
Maulvi Abdul Haque Sarkar of Thakurgaon.
Babu Bidya Nath Barman of Dakshin Batina.

VIII—Chillarang union board.

Munshi Abdur Rahman of Bhelajan.
Munshi Mahiruddin Ahmed of Chillarang.
Maulvi Mohammad Tamijuddin of Molani.

IX—Raipur union board.

Munshi Sahamuddin Sarkar of Mahapur.
Munshi Mafijuddin Ahmed of Sindurna.
Babu Matebar Ram Singh of Tentulia.

X—Hariharpur union board.

Babu Priya Nath Khan Chaudhury of Hariharpur.
Dr. Surendra Chandra Chaudhury of Mathurapur.
Maulvi Fazar Ali Ahmed, B.L., of Rahimanpur.

XI—Jamalpur union board.

Munshi Fajiruddin Sarkar of Maheshali.
Babu Ruhidas Singha of Rasunpur.
Babu Garachand Sarkar of Sarali.

XII—Nargun union board.

Munshi Hasiruddin Sarkar of Kist Daulatpur.
Munshi Didar Ali Mandal of Fersadangi.
Munshi Biju Mohammad Sarkar of Kaharpara.

XIII—Nischintapur union board.

Rai Sahib Girindra Chandra Chaudhury of Nischintapur.
Babu Thandiram Agarwala of Nischintapur.
Babu Bhim Chandra Dey of Nischintapur.

XIV—Salandar union board.

Munshi Hafijuddin Sarkar of Salandar.
Munshi Majaffar Sarkar of Salandar.
Babu Chandra Mohan Sarkar of Akhopur.

XV—Kachubari union board.

Maulvi Mohammad Nasiruddin of Kachubari.
Munshi Rahimuddin Sarkar of Sasela Piyala.
Babu Nirapada Samanta of Kachubari.

XVI—Sukhanpukhari union board.

Babu Ram Gobinda Barman of Sardubi.
Munshi Tamijuddin Sarkar of Sukhanpukhari.
Munshi Khairat Mohammad Bania of Araji Gopalpur.

XVII—Gopalpur union board.

Babu Rangalal Madak of Gareya.
Babu Priya Nath Dass Chaudhury of Gareya.
Munshi Afaluddin Saha of Laskara.

XVIII—Jagannathpur union board.

Babu Indra Nath Bose of Daulatpur.
Munshi Khijrat Mondal of Gauripur.
Munshi Amiruddin Mondal of Jagannathpur.

Police-station Haripur.

I—Gedura union board.

Munshi Pan Mohammad of Gedura.
Munshi Chiharu Mohammad of Medinisagar.
Babu Nataru Swarnakar of Satighata.

II—Amgaon union board.

Munshi Pesh Mohammad Sarkar of Amgaon.
Munshi Afiluddin Sarkar of Amgaon.
Babu Radha Nath Das Sarkar of Kamarpukur.

III—Bakua union board.

Munshi Dama Mohammad Sarkar of Singhari.
Munshi Tasar Mohammad Sarkar of Bakua.
Babu Kristakan Singh of Bakra.

IV—Dangipara union board.

Munshi Abdul Majid of Birgar.
Munshi Joynal Abedin of Ranhatta.
Babu Sambhu Nath Singh of Kandhal.

V—Haripur union board.

Babu Rabindra Narayan Roy Chaudhury of Haripur.
Babu Suresh Chandra Som of Bhabanandapur.
Munshi Kalimuddin Ahmed Sarkar of Basalgaon.

VI—Bhaturia union board.

Babu Kamal Lochon Saha of Tengria.
Munshi Nanu Miya Pradhan of Chapasar.
Babu Shiblal Barman of Magura.

Police-station Ranisankail.

I—Dhamagarh union board.

Babu Nil Chand Routh of Dharmagarh.
Munshi Basiruddin Sarkar of Bharnia.
Munshi Farjan Ali of Dhuljhari.

II—Kashipur union board.

Babu Bhupendra Kumar Chaudhuri of Jagdal.
Babu Umakanta Mahata of Jagdal.
Babu Ramani Mohon Singh of Numtoir.

III—Bhabanandapur union board.

Babu Tarak Nath Maitra of Durlavpur.
Babu Guruprasad Mondal of Parkunda.
Munshi Kader Box Sarkar of Gandagaon.

IV—Raitor union board.

Munshi Latifar Rahaman of Jaduar.
Babu Basanta Kumar Singh of Faringadihi.
Babu Gengalram Sarkar of Faringadihi.

V—Bachore union board.

Maulvi Mohammad Majiruddin of Bistupur.
Maulvi Mohammad Majibar Rahman of Madhabpur.
Munshi Ead Rahman Sah of Bajebaksha.

VI—Nanduar union board.

Babu Ramesh Chandra Gupta of Sandharai.
Babu Padma Lochon Singh of Sialdangi.
Munshi Jamiruddin Sarkar of Bongaon.

VII—Routhnagar union board.

Munshi Azimuddin Ahmed of Khudra-Pratappur.
Munshi Dabijuddin Ahmed of Rangatungi.
Munshi Gosh Mohammad of Uttargaon.

VIII—Lehemba union board.

Munshi Nasiruddin Sarkar of Gangua.
Munshi Bherku Mohammad of Chaarpur.
Babu Kali Kanta Sarkar of Lehemba.

Police-station Atwari.

I—Dhamoir union board.

Munshi Najibuddin Sarkar of Danabir.
Munshi Samiruddin Sarkar of Fatepur.
Babu Monoranjan Banerjee of Atwari.

II—Mirzapur union board.

Babu Jadulal Pal of Kistanagar.
Maulvi Mirza Mahatabuddin of Mirzapur.
Dr. Khoda Box Shah of Mirzapur.

III—Taria union board.

Maulvi Abdul Aziz Ahmed of Chheprajhar.
Munshi Samsul Huda of Chheprajhar.
Babu Banka Behari Thakur of Bodhgaon.

IV—Balia union board.

Babu Shyama Prosad Ray Chaudhury of Barsalupara.
Munshi Lulu Mohammad Sarkar of Bamankumar.
Babu Kholaram Barman of Molani.

V—Radhanagar union board.

Maulvi Mohammad Asiruddin Sarkar of Radhanagar.
Babu Govinda Chandra Ghose of Baradap.
Munshi Ahamuddin Sarkar of Kist Raseya.

VI—Balarampur union board.

Maulvi Anwaruddin Sarkar of Satkhamar.
Babu Kali Mohan Mondal of Duo-Suo.
Maulvi Mohammad Ismail Sarkar of Satkhamar.

Police-station Baliadangi.

I—Paria union board.

Munshi Mafijuddin Ahmed of Chakdaha.
Babu Dhan Sing Sarkar of Dakshin Paria.
Munshi Mirza Habibar Rahman of Mechni.

II—Dhantal union board.

Babu Ramani Mohan Sing of Banagaon.
Munshi Maulabux Sarkar of Bhandardaha.
Munshi Adam Mahammad Sarkar of Dhukurjhari.

III—Charole union board.

Babu Jadab Chandra Nath of Sabajpur.
Babu Debendra Nath Dass of Madhupur.
Munshi Imaruddin Sarkar of Charole.

IV—Barabari union board.

Babu Kamini Kumar Sarma of Haripur.
Munshi Saharathuddin Sarkar of Barabari.
Munshi Amiruddin Sarkar of Haoda.

V—Amjankhore union board.

Munshi Gafar Mandal of Udaipur.
Munshi Bacha Mohammad Sarkar of Amjankhore.
Babu Sahan Lall Sarkar of Ratnai.

VI—Palashbari union board.

Munshi Moula Box of Palashbari.
Babu Satanu Nath Sarkar of Sopra.
Munshi Mahiuddin Mia of Boro Parua.

VII—Duo Suo union board.

Babu Tarak Nath Rai Choudhury of Palashbari.
Munshi Yasin Ali Choudhury of Songaon.
Munshi Dianat Sarkar of Lalapur.

VIII—Bhanore union board.

Babu Gajendra Singha of Sidhore.
Babu Basanta Kumar Singha of Kalanda.
Babu Ghatak Chandra Singha of Bhanore.

Police-station Bochaganj.

I—Nafanagar union board.

Munshi Dafiruddin Sarkar of Nafanagar.
Munshi Samsuddin Ahmed of Barasultanpur.
Babu Agna Prasad Sarkar of Ruhigaon.

II—Ishinia union board.

Munshi Tasiruddin Sarkar of Dakchai.
Babu Baneram Mandal of Isnia.
Babu Sibaprasad Sarkar of Sankai.

III—Mushidhat union board.

Maulvi Khorshed Ali Chaudhury of Dhantala.
Babu Jyotish Chandra Roy of Setabganj.
Munshi Besarat Ali Sarkar of Nakduar.

IV—Chandpur union board.

Munshi Munsef Ali Saha of Konua.
Babu Rabindra Nath Dass of Sada Mahal.
Babu Bhola Nath Dass of Parbatipur.

V—Atagaon union board.

Munshi Nil Mohammad Sarkar of Atgaon.
Babu Debendra Nath Das Sarkar of Mulduar.
Babu Dharan Chandra Dass of Alampur.

VI—Chhatoil union board.

Munshi Asiruddin Sarkar of Deur.
Babu Braja Mohan Sarkar of Palashbari.
Babu Nishi Kanta Chaudhury of Banhara.

Police-station Pirganj.

I—Jangaon union board.

Munshi Mafizuddin Sarkar of Bhomradaha.
Munshi Asiruddin Mohammad of Khamarsenua.
Babu Gostha Behari Ghosh of Bhomradaha.

II—Khongaon union board.

Babu Gagan Chandra Barman of Biswaspur.
Babu Syam Lal Sarkar of Ujialkota.
Munshi Ekbar Ali Sarkar of Jasaipara.

III—Begunbari union board.

Munshi Mohammad Boyezuddin Ahmed Chaudhury of Begunbari.
Munshi Rakim Sardar of Saidpur.
Babu Laksman Chandra Datta of Bandigar.

IV—Saidpur union board.

Munshi Cheharu Mohammad Chaudhury of Madhabpur.
Babu Bhotong Pali of Kishamat Saidpur.
Maulvi Nur Mohammad of Begunbari.

V—Kosaraniganj union board.

Maulvi Mohammad Abdul Based of Malancha.
Munshi Abdul Sovan Sarkar of Ghuguya.
Munshi Bhuban Ali Sarkar of Kachan.

VI—Pirganj union board.

Munshi Mujaffar Ali Chaudhury of Begungaon.
Babu Lalit Mohan Singh of Narayanpur.
Maulvi Majibar Rahman of Bhelatoir.

VII—Daulatpur union board.

Babu Manindra Nath Datta of Mallikpur.
Babu Raghunath Roy Adhikari of Daulatpur.
Munshi Lodhoi Mohammad of Joykrishnapur.

VIII—Bhebra union board.

Munshi Munsiff Ali Sarkar of Malgaon.
Munshi Sahabat Ali Sarkar of Bhebra.
Babu Khaturam Barman of Sindagar.

IX—Sengaon union board.

Babu Hari Mohan Sarkar of Horsua.
Babu Undi Mandal of Kanari.
Babu Kailuram Sing of Barabisanti.

X—Bandiara union board.

Munshi Ibrahim Sarkar of Karnai.
Babu Bhupendra Narayan Ghosh of Karnai.
Munshi Abdul Aziz Sarkar of Ronsia.

XI—Boirchuna union board.

Babu Ghanashyam Dass of Chandhor.
Babu Ledem Prodhan of Chotkumria.
Babu Totiram Sarkar of Dopail.

Police-station Birganj.

I—Shibrampur union board.

Munshi Nasaratulla Sarkar of Dhangaon.
Babu Purna Chandra Barman Sarkar of Muraripur.
Babu Bidyaram *alias* Bidyabhusan Sen of Laskara Araji.

II—Palashbari union board.

Munshi Meher Box Sarkar of Modati.
Babu Rama Kanta Nath Saha of Bhandarail.
Babu Upendra Mistri of Majkuri.

III—Satagarm union board.

Gurudayal Barman of Kasinnagar.
Babu Gopiram Agarwala of Jharbari.
Munshi Mohammad Mafizuddin Sarkar of Satagram.

IV—Mohonpur union board.

Munshi Kheru Mohammad Sarkar of Tulsipur.
Babu Dhanpati Jha of Kashipur.
Babu Rajani Kanta Khen of Karimpur.

V—Moricha union board.

Munshi Mohammad Mahabuddin Chaudhury of Maricha.
Babu Abala Kanta of Sundari.
Babu Maheswar Saha of Mahadebpur.

VI—Prannagar union board.

Munshi Bhuban Ali Sarkar of Sator.
Babu Sreekanta Saha of Palanugaon.
Babu Pirit Chand Saha of Singjani.

VII—Mohammadpur union board.

Babu Anantaram Sarkar of Laksmipur.
Babu Mahesh Chandra Chakravarty of Chaklakhipur.
Munshi Makhan Ali Sarkar of Laksmipur.

VIII—Bhogagar union board.

Babu Nakul Chandra Kaviraj of Gandara.
Munshi Samiruddin Mandal of Chaulia.
Munshi Hejatulla Saha of Gopalpur.

IX—Sujalpur union board.

Babu Daya Nath Saha of Mahugaon.
Babu Ramesh Chandra Chaudhury of Sujalpur.
Maulvi Tafiruddin Ahamed Chaudhuri of Shitlai.

X—Nijpara union board.

Munshi Besaruddin Ahmed Sarkar of Debipur.
Munshi Majiruddin Saha of Danapur.
Babu Jatia Barman Saha of Kaikure.

XI—Paltapur union board.

Munshi Osiruddin Saha of Ghoraband.
Munshi Darbesh Ali Saha of Paltapur.
Babu Tarini Kanta Sarkar of Sengram.

Police-station Khansama.

I—Alokjhari union board.

Maulvi Mohammad Musa of Jahangirpur.
Munshi Keramuddin Saha of Basuli.
Babu Kunja Lal Agarwala of Khansama.

II—Bherbheri union board.

Munshi Keramuddin Sarkar of Chaksakoa.
Munshi Sahabuddin Sarkar of Chakrampur.
Babu Bhuban Chandra Saha of Sahardh.

III—Angarpara union board.

Munshi Ujir Ali Sarkar of Chhatianagar.
Babu Manindra Nath Ghosh of Pakerhat.
Babu Joy Sankar Sarkar of Jugirghopa.

IV—Khamarpara union board.

Munshi Dohor Ali Sarkar of Dangapara.
Munshi Emaratulla Saha of Jugirghopa.
Babu Krishna Charan Sarkar of Juair.

V—Bhabki union board.

Munshi Rohibulla Shah of Margaon.
Munshi Ashi Mahmud Sah of Bhabki.
Babu Nabadwip Chandra Roy of Guliara.

VI—Goaldihi union board.

Babu Chintaram Roy of Dubalia.
Munshi Ejaruddin Sarkar of Goaldihi.
Babu Uma Nath Saha of Hasimpur.

Police-station Kaharul.

I—Dabor union board.

Babu Chandan Mal Mollani of Saidpur.
Babu Naba Kanta Sarkar of Teghana.
Munshi Tula Saha of Sadarail.

II—Rasulpur union board.

Babu Ananta Mohan Barma of Banrah.
Munshi Yakub Ali Sarkar of Baleya.
Gafur Mohammad of Bergaon.

III—Targaon union board.

Munshi Nabiruddin Sarkar of Paniagaon.
Babu Sundaram Saha of Chhatoil.
Babu Dina Saha of Bongsipur.

IV—Mukundapur union board.

Babu Danmal Daga of Uchitpur.
Babu Jagiram Saha of Deonghata.
Munshi Sariatulla Sarkar of Pouria.

V—Ramchandrapur union board.

Babu Bonwari Pal of Raypur.
Maulvi Mir Paigam Ali Chaudhury of Ramchandrapur.
Doctor Asiruddin Ahmed of Sultanpur.

VI—Sundarpur union board.

Munshi Sarafuddin Sarkar of Poyesh.
Munshi Serajuddin Sarkar of Dwipnagar.
Babu Madhusudan Barman of Dhanigram.

S. P. GHOSE, *District Magistrate.*

Orders by the Deputy Inspector-General of Police, Rajshahi Range.

Jalpaiguri.—No. 2005.—14th March 1935.—Babu Srish Chandra Chaudhuri, Inspector, Rajshahi, is granted, 4 months' leave on average pay, on medical certificate, under rule 81 (*b*) (*ii*) of the Fundamental Rules, in extension of the leave already granted to him.

The existing acting arrangement will continue.

E. B. JONES,
Deputy Inspector-General of Police.

Registered No. C207

The Calcutta Gazette

THURSDAY, MARCH 28, 1935.

PART IA

Orders and Notifications by the Government of India republished for general information.

HOME DEPARTMENT.

NOTIFICATIONS.

POLICE.

New Delhi, the 13th March 1935.

No. F. 21/XIV/35.—In exercise of the powers conferred by proviso (*d*) to sub-rule (1) of rule 3 of the Indian Arms Rules, 1924, the Governor-General in Council is pleased to direct that the exemption from the operation of the prohibitions and directions contained in sections 13, 14 and 15 of the Indian Arms Act, 1878 (XI of 1878), conferred by the said sub-rule on the ancient zamindars of the Madras Presidency shall cease to extend to M. R. Ry. Vijaya Raghunadha Thiruvengada Pannikondar, Zamindar of Neduvasal, Pattukkottai taluk, Tanjore District.

No. F. 21/XV/35.—In exercise of the powers conferred by clause (d) of the proviso to sub-rule 1 of rule 3 of the Indian Arms Rules, 1924, the Governor-General in Council is pleased to direct that the exemption from the operation of the prohibitions and directions contained in the Indian Arms Act, 1878 (XI of 1878), conferred by the said sub-rule on holders of swords and other arms received as gifts from a local Government shall cease to extend to Bhai Mohindar Singh Ahluwalia of Batala, District Gurdaspur, Punjab.

M. G. HALLETT,
Secy. to the Govt. of India.

FINANCE DEPARTMENT.

NOTIFICATION.

New Delhi, the 14th March 1935.

No. F.-29-(2)-R. II/35.—In exercise of the powers conferred by sub-section (*2*) of section 8 of the Provident Funds Act, 1925 (XIX of 1925), the Governor-General in Council is pleased to direct that the provisions of the said Act shall apply, with effect from the 1st April 1935, to the provident fund established for the benefit of the employees of the Calcutta Improvement Tribunal.

P. C. TALLENTS,
Secy. to the Govt. of India.

FOREIGN AND POLITICAL DEPARTMENT.

NOTIFICATION.

New Delhi, the 14th March 1935.

No. 156-N.—It is notified for general information that the Government of Persia have decided that from 21st March 1935 they will no longer employ the words "Persia" and "Persian" when referring to that country and its people, and have requested that the words "Iran" and "Iranian" should be used in their stead. The Government of India have decided to accede to this request in official correspondence.

H. A. F. METCALFE,
Foreign Secy. to the Govt. of India.

DEPARTMENT OF COMMERCE.

NOTIFICATIONS.

MERCHANT SHIPPING.

New Delhi, the 16th March 1935.

No. 5-M.I. (2)/35.—Mr. A. C. Hopper, Ship Surveyor, Mercantile Marine Department, Calcutta, having returned to duty on the 24th February 1935, the unexpired portion of the leave notified in this Department Notification No. 5-M.I.(2)/35, dated the 9th February 1935, is hereby cancelled.

H. Dow,
Joint Secy. to the Govt. of India.

REGISTRATION OF ACCOUNTANTS.

The 16th March 1935.

No. 27 (1)-T. & E. (R. A.).—In exercise of the powers conferred by sub-section (*2*) of section 144 of the Indian Companies Act, 1913 (VII of 1913), the Governor-General in Council is pleased to direct that the following further amendments shall be made in the Auditor's Certificates Rules, 1932, the same having been previously published as required by the said sub-section, namely:—

(1) In sub-rule (1) of rule 14 of the said Rules—

(i) in clause (*c*), after the words "committed in his professional capacity," the following shall be inserted, namely:—

"or of any breach of professional propriety";

(ii) after clause (*c*), the following *Explanation* shall be inserted, namely:—

"*Explanation.*—Without prejudice to the generality of the reference to any breach of professional propriety, any act or omission specified in Appendix 3 shall be deemed to be such breach."

(2) After Appendix 2 to the said Rules, the following Appendix shall be added, namely:—

"APPENDIX 3.

[See Explanation to rule 14(1).]

LIST OF ACTS AND OMISSIONS BY AN ACCOUNTANT ENROLLED ON THE REGISTER WHICH ARE DEEMED TO BE BREACHES OF PROFESSIONAL PROPRIETY.

(1) Placing of his professional services at the disposal of or entering into partnership with an unqualified person or persons in a position to obtain business of the nature in which public accountants engage by means which are not open to an accountant enrolled on the Register or to a holder of a restricted certificate granted by a local Government entitling him to act as an auditor within a province.

(2) Allowing or agreeing to allow directly or indirectly participation by a lawyer, broker or other agent, other than a Registered Accountant or a holder of a restricted certificate or a *bona fide* employee, of the profits of his professional work or accepting or agreeing to accept any part of the profits of the professional work of a lawyer, auctioneer, broker, or other agent, other than a Registered Accountant or a holder of a restricted certificate or any commission or bonus therefrom.

(3) Accepting a position as auditor previously held by some other accountant without communicating with him.

(4) Accepting an appointment without first ascertaining from the company that the requirements of section 144(6) of the Indian Companies Act, 1913 (VII of 1913), have been duly complied with.

(5) Soliciting professional work directly or indirectly in person, by letter, by advertising in newspapers or periodicals, by placards, by the distribution of circulars, cards or hand bills or by any other like means.

(6) Publishing or sanctioning the publication of expressions of thanks or appreciation from clients, or prompting in any way laudatory notices with regard to professional matters.

(7) Certifying any accounts, exhibits, statements, schedules, or other forms of accountancy work which have not been verified entirely under the personal supervision of himself, a member of his firm, a member of his staff, another Registered Accountant or a holder of restricted certificate.

(8) Giving estimates of future profits for publication in a prospectus or otherwise, or certifying for publication statements of average profits over a period of two or more years without at the same time stating the profits or losses for each year separately.

(9) Failure to keep the moneys of his clients in a separate banking account or banking accounts exclusively used for the purpose."

No. 27(1)-T. & E. (R. A.).—In exercise of the powers conferred by sub-section (*2*) of section 3 of the Indian Companies (Amendment) Act, 1930 (XIX of 1930), the Governor-General in Council is pleased to direct that the following further amendments shall be made in the Restricted Certificates Rules, 1932, the same having been previously published as required by the said sub-section, namely:—

(1) In sub-rule (1) of rule 3 of the said Rules—

(i) in clause (*e*), after the words "committed in his professional capacity", the following shall be inserted, namely:—

"or of any breach of professional propriety";

(ii) after clause (*e*), the following *Explanation* shall be inserted, namely:—

"*Explanation.*—Without prejudice to the generality of the reference to any breach of professional propriety, any act or omission specified in the Appendix shall be deemed to be such breach."

(2) At the end of the said Rules, the following Appendix shall be added, namely:—

"APPENDIX.

[See Explanation to rule 3(1).]

LIST OF ACTS AND OMISSIONS BY AN ACCOUNTANT SUBJECT TO THESE RULES WHICH ARE DEEMED TO BE BREACHES OF PROFESSIONAL PROPRIETY.

(1) Placing of his professional services at the disposal of or entering into partnership with an unqualified person or persons in a position to obtain business of the nature in which public accountants engage by means which are not open to an accountant subject to the Auditor's Certificates Rules, 1932, or to these Rules.

(2) Allowing or agreeing to allow directly or indirectly participation by a lawyer, broker or other agent, other than an accountant subject to the Auditor's Certificates Rules or to these Rules or a *bona fide* employee, of the profits of his professional work or accepting or agreeing to accept any part of the profits of the professional work of a lawyer, auctioneer, broker, or other agent, other than an accountant subject to the Auditor's Certificates Rules or to these Rules or any commission or bonus therefrom.

(3) Accepting a position as auditor previously held by some other accountant without communicating with him.

(4) Accepting an appointment without first ascertaining from the company that the requirements of section 144(6) of the Indian Companies Act, 1913 (VII of 1913), have been duly complied with.

(5) Soliciting professional work directly or indirectly in person, by letter, by advertising in newspapers or periodicals, by placards, by the distribution of circulars, cards or handbills or by any other like means.

(6) Publishing or sanctioning the publication of expressions of thanks or appreciation from clients, or prompting in any way laudatory notices with regard to professional matters.

(7) Certifying any accounts, exhibits, statements, schedules, or other forms of accountancy work which have not been verified entirely under the personal supervision of himself, a member of his firm, a member of his staff, an accountant subject to the Auditor's Certificates Rules or to these Rules.

(8) Giving estimates of future profits for publication in a prospectus or otherwise, or certifying for publication statements of average profits over a period of two or more years without at the same time stating the profits or losses for each year separately.

(9) Failure to keep the moneys of his clients in a separate banking account or banking accounts exclusively used for the purpose."

T. A. STEWART,
Secy. to the Govt. of India.

DEPARTMENT OF INDUSTRIES AND LABOUR.

NOTIFICATION.

New Delhi, the 13th March 1935.

No. L.-3033.—In exercise of the powers conferred by section 35 of the Workmen's Compensation Act, 1923 (VIII of 1923), the Governor-General in Council is pleased to make the following rules for the transfer to any part of His Majesty's Dominions or to any other country of money paid to a Commissioner under the Act for the benefit of any person residing or about to reside in such part or country, and for the receipt and administration in British India of any money awarded under the law relating to workmen's compensation in any part of His Majesty's Dominions or in any other country, and applicable for the benefit of any person residing or about to reside in British India.

RULES.

PART I.—*General.*

1. These rules may be called the Workmen's Compensation (Transfer of Money) Rules, 1935.

2. In these rules, unless there is anything repugnant in the subject or context

(a) "the Act" means the Workmen's Compensation Act, 1923,

(b) "authorised officer" means any officer whom the local Government may designate either generally or in respect of any area or class of cases, for the purpose of performing the functions assigned by these rules to the authorised officer,

(c) "transferring authority" means any authority in any part of His Majesty's Dominions or in any other country who transfers or causes to be transferred any lump sum awarded under the law relating to workmen's compensation in such part or country and applicable for the benefit of any person residing or about to reside in British India.

3. When any sum is transmitted by any authority in British India to any other authority in accordance with these rules, the costs of such transmission may be deducted from the sum so transmitted.

4. Money transmitted by any authority in British India to any other authority in British India in accordance with these rules, shall be transmitted by one of the methods prescribed in rule 41 of the Workmen's Compensation Rules, 1924.

PART II.—*Transfer of money paid to a Commissioner for the benefit of any person residing or about to reside in another country.*

5. When the whole or any part of a lump sum deposited with a Commissioner for payment as compensation under the Act is payable to any person or persons residing or about to reside in any other country, the Commissioner may order the transfer to that country of the sum so payable.

6. When the Commissioner has ordered the transfer of any sum under rule 5, he shall cause to be prepared and shall certify under his hand a memorandum containing a brief statement of the facts of the case, of the orders passed upon it, and of the name and address of each person to whom payment is to be made.

7. If the Commissioner is not himself the authorised officer he shall forward the memorandum in duplicate to the authorised officer and may either remit the sum to be transferred to the authorised officer or retain it and dispose of it in accordance with the directions of the authorised officer. If the Commissioner is himself the authorised officer, he shall proceed as provided in rule 8.

8. The authorised officer, after satisfying himself that the memorandum is complete, shall forward it, and remit or cause to be remitted the sum to which it relates by such means of safe transmission as he may consider convenient to the authority appointed in this behalf for the country to which the sum is to be transferred, or if no such authority has been appointed, to such authority as the local Government may by general or special order direct, and shall at the same time request the authority addressed

(a) to arrange for payment to be made in accordance with the directions contained in the memorandum; and

(b) to furnish him with a report of the action taken upon the memorandum and return any sum the payment of which is for any reason impossible.

9. (1) The authorised officer shall, if he is not the Commissioner with whom the matter originated, forward to such Commissioner a copy of any report received in response to a request made under rule 8.

(2) Any sum returned in accordance with rule 8 shall be disposed of in accordance with the Act.

PART III.—*Receipt and administration in British India of any money awarded under the law relating to workmen's compensation in another country.*

10. (1) The authorised officer shall be the proper authority to receive moneys from transferring authorities.

(2) If any Commissioner or other Government servant, not being the authorised officer, receives any sum from a transferring authority he shall either forward such sum, together with any papers relating thereto, to the authorised officer for disposal or obtain the instructions of the authorised officer as to the disposal of the sum and papers and act in accordance with his instructions.

11. The authorised officer may himself dispose of any sum or part of any sum which he receives or of which he assumes control under rule 10 or may send it or any part of it for disposal to such Commissioner or Commissioners as he considers proper.

12. All sums received from a transferring authority shall be disposed of as far as possible in accordance with the provisions of the Act and the Workmen's Compensation Rules, 1924.

Provided that the directions, if any, received from the transferring authority as to the manner in which the sum should be administered shall be complied with.

13. (1) The authorised officer shall forward to the transferring authority a report showing how the sum received from him has been disposed of.

(2) Any Commissioner, not being the authorised officer, who has disposed of any part of the sum, shall make a report in duplicate as to the disposal of that part to the authorised officer, and, if the sum was received by him from another such Commissioner acting in accordance with section 21 of the Act, shall forward his report through that Commissioner.

14. Any part of the sum received from the transferring authority which shall have remained undisbursed after the completion of the proceedings shall be returned to the transferring authority by, or under the direction of, the authorised officer.

A. G. CLOW,
Joint Secy. to the Govt. of India.

ARMY DEPARTMENT.

New Delhi, the 16th March 1935.

Part B.

CANTONMENTS—REGULATIONS.

No. 165.—The following draft of certain further amendments to the Cantonment Fund Servants Rules, 1925, which it is proposed to make in exercise of the powers conferred by section 280 of the Cantonments Act, 1924 (II of 1924), is published as required by sub-section (*1*) of the said section, for the information of all persons likely to be affected thereby, and notice is hereby given that the said draft will be taken into consideration on or after the 25th April 1935.

Any objection or suggestion which may be received from any person with respect to the draft before the aforesaid date will be considered by the Governor-General in Council.

Draft Amendments.

(1) In rule 1 of the said Rules, clause (*c*) shall be omitted.

(2) In rule 34 of the said Rules, for the words "interest thereon," wherever they occur, the words "the interest earned thereby" shall be substituted.

(3) Rule 40 of the said Rules shall be omitted.

CANTONMENTS—REGULATIONS.

No. 166.—In exercise of the powers conferred by section 280 of the Cantonments Act, 1924 (II of 1924), the Governor-General in Council is pleased to direct that the following further amendments shall be made in the Cantonment Fund Servants Rules, 1925, the same having been previously published as required by sub-section (1) of the said section, namely:—

(1) In rule 10 of the said Rules, for the words "If reduced, removed or dismissed, he shall be furnished with" the words "If he is reduced, removed or dismissed, there shall be delivered to him personally or by registered post" shall be substituted.

(2) For rule 11 of the said Rules the following rule shall be substituted, namely:—

"11. Any servant who has been reduced, removed or dismissed by the Executive Officer shall be entitled to appeal to the Cantonment Authority within 30 days from the date of delivery of the document showing the grounds on which his reduction, removal or dismissal was ordered. If his appeal is rejected by the Cantonment Authority, there shall be delivered to him personally or by registered post a copy of the order passed by the Cantonment Authority and he shall be entitled within 30 days from the date of delivery of the copy of the said order to submit a further appeal to the Officer Commanding-in-Chief, the Command, whose decision shall, subject to the provision made in rule 12(A), be final."

(3) In rule 12 of the said Rules, for the words "the date of the order of reduction, removal or dismissal" the words "the date of delivery of the copy of the document showing the grounds of his reduction, removal or dismissal" shall be substituted.

ORGANISATION.

No. 167.—In exercise of the powers conferred by section 30 of the Auxiliary Force Act, 1920 (XLIX of 1920), the Governor-General in Council is pleased to direct that the following further amendment shall be made in the Auxiliary Force Rules, 1920, the same having been previously published as required by sub-section (4) of the said section, namely:—

In rule 9 of the said Rules—

(a) in sub-rule (4), after clause (e), the following clause shall be inserted, namely:—

"(f) that, having left India permanently, or having permanently changed his residence to an area in which no unit of the Auxiliary Force, India, exists, he is no longer available to perform military service under the Act;"

(b) in the table set forth in sub-rule (5), after item (h), the following item shall be inserted, namely:—

"(i) Having left India permanently, or having permanently changed his residence to an area in which no unit of the Auxiliary Force, India, exists, and being therefore military service under the Act, no longer available to perform.	The Officer Commanding the Corps or Unit."

G. R. F. TOTTENHAM,

Secy. to the Govt. of India.

DEPARTMENT OF INDUSTRIES AND LABOUR.

NOTIFICATION.

New Delhi, the 11th March 1935.

No. G.-84.—Mr. P. J. Edmunds, Director of Wireless, Wireless Branch of the Posts and Telegraphs Department, is appointed to hold charge of the office of Controller of Broadcasting in addition to his own duties with effect from the 1st March 1935.

D. G. MITCHELL,

Secy. to the Govt. of India.

Registered No. C207

The Calcutta Gazette

THURSDAY, MARCH 28, 1935.

PART IB

Educational Notices.

Presidency Division.

Calcutta, the 11th March 1935.

The award of Primary (Maktab) Final Scholarship (on the results of the Primary (Maktab) Final Examinations, 1934) to Muhammad Joynal Abedin, who appeared at the examination from the Gobukhali Upper Primary Maktab, Sadar subdivision, Jessore, published in the *Calcutta Gazette* of the 24th January 1935, is hereby cancelled.

Scholarship of Rs. 3 a month tenable for two years with effect from 1st January 1935 is awarded to the following candidate subject to the usual conditions of good conduct and satisfactory progress:—

No.	Name.	Name of school from which the candidate appeared.	Name of school where the scholarship will be tenable.
1	Muhammad Izzat Ali.	Bandhaghat U. P. Maktab.	Kashipur Junior Madrasah (Jessore).

J. M. Sen,
Inspector of Schools, Presidency Division.

Orders by the Inspector of Schools, Chittagong Division.

MEMORANDUM.

Chittagong, the 12th March 1935.

The following teachers are declared to have passed the Examination in the Art and Practice of Teaching held on the 8th and 9th March 1935:—

1. Babu Aswini Kumar Som, Assistant Teacher, Arkan Anglo-Bengali School, Akyab.
2. Babu Surendra Bejoy Majumdar, Assistant Teacher, Arkan Anglo-Bengali School, Akyab.

M. A. Jaafar,
Inspector of Schools, Chittagong Division.

Orders by the Vice-Chancellor and Syndicate of the Calcutta University.

NOTICE.

Senate House, the 14th March 1935.

The Mokshada Sundari Gold Medal for the year 1934 has been awarded to the following candidate on the merit of the essay on "Yavan Haridas" submitted by her in competition for the medal:—

Srimati Bela Debi.

Subject of the essay.

"Yavan Haridas."

B. B. Dutt,
Controller of Examinations (offg.).

Calcutta University.

NOTIFICATION No. R/101.

Senate House, the 13th March 1935.

It is notified for general information that as sanctioned by the Government of Bengal, the words "(4) History, (5) Geography, (6) Mechanics or Additional Mathematics" in the list of subjects which candidates belonging to the Hill Tribes or other Aboriginal races may offer, under sub-sections 5 and 6, section 9, Chapter XXX (Matriculation Examination) of the Regulations (page 137 of the edition of 1932), have been replaced by the following:—

"(4) Elementary Mechanics or Additional Mathematics and any two of the following subjects:—

(*i*) History.
(*ii*) Geography.
(*iii*) Elementary Hygiene."

J. Chakravorti, *Registrar.*

Orders by the Vice-Chancellor and Syndicate of the Calcutta University.

NOTIFICATION No. T. 397.

Senate House, the 12th March 1935.

B. A. Examinations, 1937.

Urdu.

(Vernacular.)

TEXT-BOOKS.

Ab-i-Hayat, by Azad. Only the following portions are to be read:—

Chapters "Urdu Zaban ki Tarikh", "Nazam-i-Urdu ki Tarikh", the Biographical accounts including the poetical selections of Wali, Sawda, Dard, Mir, Jur'at, Insha, Mus-hafi, Zawq, Ghalib, Nasikh and Atash.

Recommended for general reading:—

Al-Faruq, by Shibli Numani.
Siyarul Musannifin, by Md. Yahya Tanha.

Alternative paper in Urdu.

(To be taken up by candidates who take up Urdu as Second Language.)

TEXT-BOOKS.

(History of Literature—45 marks.)

Ab-i-Hayat-Daur Chautha (pages 232-309), Islamic Steam Press Edition, Lahore, 1917.

(History of Language—25 marks.)

Ab-i-Hayat, by Azad, Urdu Zaban ki Tarikh, omitting "Brij Bhasah par Arabi aur Farsi Zabanon nekiya kiya asar kiye".

(Essay—30 marks.)

Arabic.

(Second Language.)

TEXT-BOOK.

Pass Course.

University Selections in Arabic for the B. A. Examination (University publication, edition of 1933), with the omission of pages 20-27, 38-50, 116-145.

Honours Course.

University Selections, compiled and edited in 1915 by Shamsul-Ulama Ahmad and Shamsul-Ulama Abu Nasr Muhammad Waheed, M.A., omitting pages 85-94.

The Honours course in Arabic also includes the Elements of Arabic Prosody and Rhetoric, the Outlines of Muhammadan History down to the fall of the Abbasid Caliphate, and a general knowledge of the History of Arabic Literature.

Persian.

(Second Language.)

TEXT-BOOKS.

Pass Course.

The University Selections in Persian for the B. A. Examination (University publication) *with the omission* of the following pages:—

Pages 41 (Lauh Awal) to 46 (end of Lauh Hashtam).
Pages 63-81.
Pages 82-104.
Pages 171-197.
Pages 198-216.

Honours Course.

(In addition to the pieces selected for the Pass Course.)

The Honours Persian Course, compiled by Lieutenant-Colonel D. C. Phillott, omitting pages 38-64, 76-91 and 167-224.

The Honours Persian Course includes the Outlines of Muhammadan History in so far as it relates to Persia, Central Asia and India, and the History of Persian Literature.

Urdu.

(As Second Language.)

TEXT-BOOK.

Paper I.

(Drama Text—75 marks.)

Laila Majnu, by Mirza Md. Hadi Ruswa.

(Rhetoric and Grammar—25 marks.)

Books recommended—

Quwaid-i Urdu, by Abdul Haq.

Paper II.

(1. Old Poetry Text—50 marks.)

Wali. Ghazals (Radif-i-Alif).
Mir Hasan. Mathnavi.

(2. Modern Poetry—50 marks.)

Ghalib. Diwan Radif-i-wao.
Iqbal. Tulu-i-Islam.
Hali. Chup ki Dad.

Paper III.

(Prose Text—Old and Modern.)

Mir Amman. Baghu-o-Bahar. (Dusre Darwish ki Kahini—40).
Shibli. Safar nama down to the Qustuntunia ki ijmali Tarikh—40.

(3. Translation from English into Urdu—20 marks.)

J. CHAKRAVORTI, *Registrar.*

Orders by the Vice-Chancellor and Syndicate of the Calcutta University.

NOTIFICATION No. T. 396.

Senate House, the 12th March 1935.

I. A. and I.Sc. Examinations, 1937.

Urdu.

(Vernacular.)

TEXT-BOOKS.

Prose.

Firdaus-i-Barin: A. Halim Sharar—the whole book.

Poetry.

Gulzar-i-Nasim: Daya Shankar Nasim—the whole book.
Recommended for general reading—Ibnulwaqt by Nazir Ahmad.

Persian.

(May be taken up as a Vernacular, if it is not taken up as a Classical Language.)
Hadiqa-i-Fasahat (printed by the Board of Examiners), pages 1-142 and 396-448.

Arabic.

(Second Language.)

TEXT-BOOK.

Intermediate Selections in Arabic (University publication, revised edition of 1935). Pieces to be selected later.

Persian.

(Second Language.)

TEXT-BOOK.

Intermediate Selections in Persian (University publication). The whole book with the omission of pages 50-61 and 117-134.

Urdu.

(As Second Language for female candidates.)

TEXT-BOOKS.

Safar-Nama-i-Sham o Rum, by Shibli. The following pieces: "Safar ka irada aur aghaz" down to the beginning of "Chanak Qala;" "Qustuntiniya ki ijmali tarikh aur Mukhtasar halat" down to the beginning of "Boarding System;" "Makhtab-i Harbiya" down to the beginning of "Chhape khane" and "al Kulliyat-us-Suriyai-ut Ilmiya" down to the beginning of "Beyrut se rawanagi." Shikwa-i Hind, by Hali.

Grammar.

Asas-i Urdu, by Jalaluddin Ahmad Jafari.

J. CHAKRAVORTI, *Registrar.*

Orders by the Vice-Chancellor and Syndicate of the Calcutta University.

Senate House, the 21st March, 1935.

1. The undermentioned candidates are declared to have passed the Preliminary Examination in Law held in January, 1935 :—

FIRST DIVISION.

(In order of merit.)

Ripon Law College.

1 Bandyopadhyay, Abanikanta.

University Law College.

2 Mukhopadhyay, Tinkarimohan.
3 Datta, Jagatbandhu.
Phukan, Ganeschandra.
Sengupta, Binaychandra.
6 Mukhopadhyay, Dibyendubhushan.
7 Sen, Dibyendumohan.
8 Pratihar, Sudhirchandra.
9 Chakrabarti, Jagadischandra.
10 De, Amiyakrishna.
,, Atalbihari.

Non-collegiate student (University Law College).

Sarkar, Anilchandra.

University Law College.

Sen, Lokendrachandra.
14 De, Mrityunjay.
Oinam Thambal Singh.

Ripon Law College.

16 Dasgupta, Nirmalbhushan.

University Law College.

17 Sarkar, Sibaprasanna.

SECOND DIVISION.

(In alphabetical order.)

Non-collegiate student (University Law College).

A. B. Saifuddin Hyder.

Ripon Law College.

A. N. Md. Wahiduzzaman.
A. Z. M. Abdur Razzaque.

University Law College.

Abdul Tyeb Nomanbhoy.

Ripon Law College.

Abdur Rahman Khan.

University Law College.

Abraham, M. I.

Ripon Law College.

Abu Muhammad Fazlar Rahman.
Abu Syed Md. Mubarok.

Non-collegiate student (Ripon Law College).

Abu Syed Md. Nural Islam.

University Law College.

10 Abu Sayeed Md. Fazlur Rahman.
Abul Kassem Talukder.
Abul Khair Serazul Huque.
Acharyya, Jitendranath.

Ripon Law College.

Azim Uddin Ahmed.

University Law College.

Baksi, Ajitkumar.
Bandyopadhyay, Abhayapada.
,, Apareschandra.
,, Bhubaneswar.

Ripon Law College.

Bandyopadhyay, Bijaykrishna.

Non-collegiate student (University Law College).

20 Bandyopadhyay, Haridas.

University Law College.

Bandyopadhyay, Kamalkanti.

Ripon Law College.

Bandyopadhyay, Kumudranjan.
,, Mrityunjay.

Non-collegiate student (Roll Deoli N. 6).

Bandyopadhyay, Pankajbihari.

University Law College.

Bandyopadhyay, Sibaprasad.
,, Sudhirkumar.
Bargohain, Bipinkumar.

Non-collegiate student (Roll Buxa N. 1).

Barman, Debajyoti.

University Law College.

Barman, Syamapada.

Earle Law College, Gauhati.

30 Barua, Bhabendranath.

University Law College.

Barua, Birinchikumar.
,, Praphullakumar.

Ripon Law College.

Baruachaudhuri, Kshitischandra.

Non-collegiate student (University Law College).

Basak, Gopiballabh.

Non-collegiate student (Ripon Law College).

Basak, Praphullakumar.

Non-collegiate student (Roll Deoli N. 3).

Basu, Birajaparsanna.

Ripon Law College.

Basu, Bisweswar.
,, Sitansumohan.

Non-collegiate student (Roll Ber. N. 4).

Basu, Subodhkisor.

University Law College.

40 Bhaduri, Susilkumar.
Bhattacharyya, Amiyacharan.
,, Chintamani.

Ripon Law College.

Bhattacharyya, Jaladhar.

University Law College.

Bhattacharyya, Kalidas.

Non-collegiate student (Roll Deoli N. 5).

Bhattacharyya, Kumudlal.

University Law College.

Bhattacharyya, Manoranjan.
,, Nanindralal.

Ripon Law College.

Bhattacharyya, Prabodhchandra.

Non-collegiate student (Roll Deoli N. 4).

Bhaumik, Kshitischandra.

University Law College.

Bhaumik, Manindramohan.
,, Syamapada.
Bhushan Prasad.
Biswas, Anadiballabh.

Ripon Law College.

Biswas, Gaurchandra.
,, Jatindranath.

University Law College.

Biswas, Sudhansubimal.
Chaki, Nalinbihari.

Ripon Law College.

Chakrabarti, Anantadeb.
,, Haripada.

Non-collegiate student (Roll Hijli N. 1).

Chakrabarti, Kumudchandra.

University Law College.

Chakrabarti, Nalinbihari.
,, Narendrachandra.
,, Nilratan.

Non-collegiate student, University Law College.

Chakrabarti, Parimalchandra.

University Law Colllege.

Chakrabarti, Ramanimohan.
,, Rameschandra.
,, Sambhunath.

Non-collegiate student (Roll Hijli N. 5).

Chakrabarti, Sarojkumar.

University Law College.

Chakrabarti, Sudhirkumar.
Chandra, Abhaypada.
Chattopadhyay, Apurbakanti.
,, Asanath.
,, Binaykumar.

— Ripon Law College.

Chattopadhyay, Brajendrakumar.

University Law College.

Chattopadhyay, Haradhan.

Ripon Law College.

Chattopadhyay, Hrishikes.
,, Kuladananda.
,, Mrityunjay.
,, Panchanan.

University Law College.

Chattopadhyay, Ramaprasad.

Non-collegiate student (Roll Ber. N. 2).

Chattopadhyay, Rameschandra.

University Law College.

Chattopadhyay, Sibapada.

Ripon Law College.

Chattopadhyay, Sibcharan.
,, Subodhkumar.
,, Sumohan.
Chaudhuri, Amiyaranjan.

Non-collegiate student (University Law College).

Chaudhuri, Binayendranarayan.

University Law College.

Chaudhuri, Durgapada.
,, Hemendralal.
,, Hemendranath.
,, Jnanendrabhushan.

Ripon Law College.

Chaudhuri, Kshirodbihari.

University Law College.

Chaudhuri, Phanindramohan.

Earle Law College, Gauhati.

Chaudhuri, Rabindrachandra.

Ripon Law College.

Chaudhuri, Satyendranarayan.

University Law College.

Chaudhuri, Subodhchandra.
Dalchand Surana.
Damber Singh Gunung.
Dan, Hariprasad.
Das, Balaichand.

Ripon Law College.

Das, Debendranath.

University Law College.

Das, Hemchandra.
,, Niharranjan.
,, Pulinchand.
,, Purnachandra.

Earle Law College, Gauhati.

Das, Subodhchandra.

University Law College.

Dasgupta, Binodlal.

Ripon Law College.

Dasgupta, Jagadischandra. —

University Law College.

Dasgupta, Sisirkumar.

Non-collegiate student (Roll Deoli N. 2).

Dastidar, Purnendubikas.

University Law College.

Datta, Abanimohan.
,, Amarchand.
,, Baidyanath.
,, Bharatibhushan.
,, Dauleswar.

Non-collegiate student (Roll Hijli N. 2).

Datta, Haripada.

Ripon Law College.

Datta, Indusekhar.
,, Krishnagopal.
,, Manindranath.

University Law College.

120 Datta, Milanchand.
,, Sachindranath, II.
,, Saibalchandra.

Ripon Law College.

Datta, Sitalchandra.
Dattagupta, Saurendrakumar.

Non-collegiate student (Roll Deoli N. 10).

Dattaray, Amulyakanchan.

University Law College.

De, Gopalchandra.
,, Nandadulal.
,, Pareschandra.
,, Taraknath.

Ripon Law College.

130 Dhar, Kshitischandra.

University Law College.

Fateh Chand Kothary.
Fayekazzaman.
Fazle Imam Mahamed Nurul Abedin.

Ripon Law College.

Fazlur Rahman Gazi.

University Law College.

Gangopadhyay, Achalanath.
,, Alokdhan.

Ripon Law College.

Gangopadhyay, Rabindranath.

University Law College.

Ghatak, Gaurinarayan.
Ghosh, Bankimchandra.
140 ,, Bhupendranath.
,, Bipinbihari.
,, Brajendramohan.

Non-collegiate student (University Law College).

Ghosh, Bratischandra.
,, Chinmayjiban.
,, Chittaranjan.

Ripon Law College.

Ghosh, Jagadischandra.

University Law College.

Ghosh, Madanmohan, II.
,, Mahadeb.
,, Manimay.
150 ,, Nrisinhaprasad.

Ripon Law College.

Ghosh, Prabhatkumar.

University Law College.

Ghosh, Pradyotkumar.
,, Sachindramohan.
,, Sudhirchandra.

Ripon Law College.

Ghoshal, Debiprasanna.
,, Dulalchandra.
,, Manindranath.

Earle Law College, Gauhati.

Gogai, Munindranath.

Ripon Law College.

Goswami, Krishnakisor.

University Law College.

160 Goswami, Rabindrakumar.

Non-Collegiate student (University Law College).

Govind Lall Sharma.

University Law College.

Guha, Anilmohan.
,, Dipendrakumar.
,, Jyotsnamay.

Non-collegiate student (Roll Hijli N. 4).

Guha, Nareschandra.

University Law College.

Gupta, Jnanendrabhushan.

Ripon Law College.

Gupta, Sharanan.
Hajarika, Dandeswar.

Non-collegiate student (Ripon Law College).

Hajra, Ramranjan.

University Law College.

170 Hajra, Sachindrasankar.
Harihar Tiwary.

Ripon Law College.

Iqbal Jahan.

University Law College.

K. Bhaskara Row.

Non-collegiate student (University Law College).

K. V. Ramkrishna Reddi.

University Law College.

Kar, Jitendranath.

Ripon Law College.

Khaskil, Sasikumar.

University Law College.

Kirti, Abanikumar.
Krishna Rao Kantipudi.
Kundu, Amalananda.
180 Laha, Kartikcharan.
Lakshman Giri.
Mahadeo Misra.

Ripon Law College.

Mahammad Sirajul Huque.
Mahomed Maizuddin.

University Law College.

Maiti, Sarojkumar.

Non-collegiate student (Roll Ber N. 6).

Maitra, Ambikacharan.

Ripon Law College.

Maitra, Subodhchandra.

University Law College.

Majumdar, Kantibhushan.

Earle Law College, Gauhati.

Majumdar, Karunamay.

University Law College.

Majumdar, Rabindranarayan.
Mal, Gobindachandra.
Mallik, Nripendrachandra.
" Upendranath.

Ripon Law College.

Mandal, Girindranath.

University Law College.

Mandal, Harendranath.

Ripon Law College.

Mandal, Phanibhushan.
" Ushapati.

University Law College.

Manna, Jogendranath.

Ripon Law College.

Maulik, Sailendrakumar.
Md. Abdul Jalil.
Md. Abdul Jalil Miah.
Md. Asmat Uddin Sarker.

Non-collegiate student (Ripon Law College).

Md. Elaruddin Mondal.

Ripon Law College.

Md. Mozammel Huq.

University Law College.

Md. Rahmat Ali.

Ripon Law College.

Misra, Dhirendranath.

University Law College.

Misra, Gopalchandra
Mitra, Baidyanath.

Ripon Law College.

Mitra, Baidyanath.

University Law College.

Mitra, Birendranath.

Ripon Law College.

Mitra, Chandicharan.

University Law College.

Mitra, Manindrachandra.
" Ramaprasad.

Ripon Law College.

Mitra, Sudhansukumar.
Mofozol Hussain.

University Law College.

Mukhopadhyay, Ajitkumar.

Non-collegiate student (University Law College).

Mukhopadhyay, Amalkumar.

University Law College.

Mukhopadhyay, Amarendranath.
" Amiyanath.
" Ardhendusekhar.
" Barindrakumar.

Non-collegiate student (University Law College).

Mukhopadhyay, Indubhushan.

University Law College.

Mukhopadhyay, Jyotirmay.
" Nirmalkumar, II.
" Nirmalyakumar.

Non-collegiate student (Roll. Deoli N. 8).

Mukhopadhyay, Phanindramohan.

University Law College.

Mukhopadhyay, Prabhatkumar.
" Ramapati.

Non-collegiate student (Roll Ber. N. 8).

Mukhopadhyay, Surendranath.

University Law College.

Mukhopadhyay, Sureschandra.
Nandi, Nikhilnath.
Niyogi, Sailendranath.
P. R. Karunataran Nair.
Pal, Amulyacharan.
" Panchanan.

Ripon Law College.

Pal, Sunilchandra.

University Law College.

Pal, Tarapada.
Palit, Phanindramohan.
Pandit, Hemendranath.
Panigrahi, Jibankrishna.

Non-collegiate student (University Law College).

Phukan, Mohininath.
Poddar, Digendranath.

University Law College.

Pramanik, Asutosh.

Ripon Law College.

Pramanik, Nagendranath.

Non-collegiate student (University Law College).

Raha, Rabindranath.

University Law College.

Rakshit, Bijaychand.
" Prabodhkumar.
Ram Behari Singh.
Ray, Amarendra.
Ray, Anandakumar.
" Anukulchandra.

Ripon Law College.

Ray, Bimalaprasad.

University Law College.

Ray, Chinmaysundar.

Ripon Law College.

Ray, Haripada.

University Law College.

Ray, Jibendranarayan.

Non-collegiate student (University Law College).

Ray, Kesabnarayan.

Ripon Law College.

Ray, Nirmalchandra.

University Law College.

Ray, Rabindranath.

Non-collegiate student (University Law College).

Ray, Rajendrakumar.

University Law College.

260 Ray, Ramendrakanta.

Ripon Law College.

Ray, Sachikanta.

University Law College.

Ray, Sachindralal.
,, Tarapada.
Raychaudhuri, Abanindranath.
,, Asutosh.

Ripon Law College.

Raychaudhuri, Jadabchandra.

University Law College.

Raychaudhuri, Smritikumar.
Saha, Dhirendranath.
,, Mahendranath.

Earle Law College, Gauhati.

270 Saha, Tarunoswar.

University Law College.

Sahana, Bishnupada.

Non-collegiate student (University Law College).

Sanyal, Jyotikrishna.

Ripon Law College.

Sarkar, Kedarnath.

Non-collegiate student (University Law College).

Sarkar, Sanatkumar.
Sen, Ajayendu.

University Law College.

Sen, Anilkumar.
,, Ardhendubikas.

Non-collegiate student (University Law College).

Sen, Bimalendusekhar.

University Law College.

Sen, Chittaranjan.
280 ,, Dibakar.

Non-collegiate student (Roll Deoli N. 1).

Sen, Jaminiranjan.

University Law College.

Sen, Mahatapchandra.
Sen, Panchkari.
,, Rabindranath.
,, Sunilkumar.

Non-collegiate student (Roll Deoli N. 14).

Sen, Tripurchandra.

University Law College.

Sengupta, Asitranjan.
,, Hariparasad.

Non-collegiate student (Roll Deoli N. 11).

Sengupta, Manoranjan.

University Law College.

290 Sengupta, Sudhansu.
Sayidud Din Ahmad.
Sha, Basantalal.

Ripon Law College.

Shah Muhiuddin Mujtaba.
Shamsul Karim Sadique.
Sinha, Charuchandra.

University Law College.

Sinha, Krishnamohan.
Sinharay, Ajitkumar.

Non-collegiate student (University Law College).

Sinharay, Sachindrakumar.

University Law College.

Som, Prabodhlal.

Ripon Law College.

300 Sufi Hossain Ali.

University Law College.

Syed Burhanuddin Ahmed.

Ripon Law College.

Syed M. I. Md. Muzaffer Hossan.

University Law College.

Syed Mohammad Modassir.
Syed Serajul Huq.
Talukdar, Nikhilchandra.
Ukil, Amulyachandra.
307 Y. Satyanarayana Murty.

II. The undermentioned candidates are declared to have passed the Intermediate Examination in Law, held in January, 1935 :—

FIRST DIVISION.

(In order of merit).

University Law College.

1 Pal, Tapendrakumar.
2 De, Amalkrishna.

Ripon Law College.

3 Chakrabarti, Jatindrachandra.
4 Das, Radhagobinda.

University Law College.

5 Syam, Anathbandhu.

Earle Law College, Gauhati.

6 Goswami, Pratapchandra.

University Law College.

7 Gangopadhyay, Jnanananda.
8 Chakrabarti, Bhabatosh.

Non-collegiate student (Roll Deoli N. 4).

Chakrabarti, Jyotiswar.

Ripon Law College.

Das, Amiyaprasad.

University Law College.

11 Ghosh, Sunilkumar.
12 Chakrabarti, Anupamchandra.
13 ,, Binodbihari.
14 Ray, Bijanbandhu.
15 Dasgupta, Sudhenduprasad.
16 Ray, Pritischandra.
17 Najabuddin Ahmed.
18 Hajra, Tarapada.
Mitra, Srigopal.
20 Dasgupta, Manindranath.
21 Sen, Susantakumar.
22 Mukhopadhyay, Ajitkumar.

Ripon Law College.

Palit, Dineskumar.

SECOND DIVISION.

(In alphabetical order).

Non-collegiate student (University Law College.

Abdul Wares.

University Law College.

Abdur Rabb.

Ripon Law College.

Abu Nasar Md. Nazir Uddin Chowdhury.
Abul Mukarram Fazlul Wahhab.

Non-collegiate student (Roll Deoli N. 3.)

Adhikari, Amulyachandra.

University Law College.

Adhya, Chandrasekhar.
,, Syamapada.
Bagchi, Kripanath.
Bandyopadhyay, Bholanath.

Ripon Law College.

Bandyopadhyay, Bijaybhushan.

University Law College.

Bandyopadhyay, Binaykrishna.

Earle Law College, Gauhati.

Bandyopadhyay, Kalikrishna.

University Law College.

Bandyopadhyay, Kshitischandra.
,, Phanindranath.

Ripon Law College.

Bandyopadhyay, Rampada.

University Law College.

Bandyopadhyay, Sibsankar.

Earle Law College, Gauhati.

Barua, Dayalchandra.
,, Bhabanikanta.

Ripon Law College.

Basu, Anathbandhu.

University Law College.

Basu, Bijaykrishna.
,, Kshitischandra.
Basu, Manojmohan.

Ripon Law College.

Basu, Ranajitkumar.

University Law College.

Basu, Sisirkumar
,, Sudhirchandra.
,, Sudhirkumar.
,, Surendramadhab.

Ripon Law College.

Basu, Trigunacharan.

University Law College.

Bhanja, Dwipendranath.
Bhanwar Lal Pincha.
Bhattacharyya, Binaybhushan.

Non-collegiate student (University Law College).

Bhattacharyya, Mahimaranjan.

Ripon Law College.

Bhaumik, Jitendranath.

University Law College.

Bhrigunath Singh.
Bijai Bahadur Singh.
Bisi, Himadrinath.
Biswas, Harendranath.
,, Radhanath.

Ripon Law College.

Biswas, Subodhkumar.

Earle Law College, Gauhati.

Briggs, Genius.

University Law College.

Chakrabarti, Chandidas.

Non-collegiate student (Roll Deoli N. 2).

Chakrabarti, Jasodaranjan.

University Law College.

Chakrabarti, Madhusudan.
,, Nareschandra.
,, Phanindranath.

Ripon Law College.

Chanda, Prabodhchandra.
Chandra, Satisbhushan.

Earle Law College, Gauhati.

Changkakati, Rameschandra.

University Law College.

Chattopadhyay, Ajitkumar.
,, Amarnath.
,, Ambujaksha.
,, Bhabaniprasad.

Non-collegiate student (University Law College).

Chattopadhyay, Bimalaprasad.

University Law College.

Chattopadhyay, Jibanranjan.
,, Sitansubhushan.
Chaudhuri, Jatindramohan.

Earle Law College, Gauhati.

Chaudhuri, Mahendramohan,

University Law College.

Chaudhuri, Parananda.
,, Pratapchandra.
,, Sudhirchandra.
Dan, Aswinikumar.
Das, Kalipada.
,, Prabhaskrishna.
,, Praphullakumar.
,, Rameschandra.

Earle Law College, Gauhati.

Das, Ramnath.

Ripon Law College.

Das, Satyaranjan.

University Law College.

Datta, Bimalkumar.
,, Binaykrishna.

Ripon Law College.

Datta, Hirendranath.

University Law College.

Datta, Narendranath.
,, Nareschandra.

Earle Law College, Gauhati.

Datta, Satyaranjan.

University Law College.

Datta, Ahibhushan.
De, Chandicharan.
,, Digendrachandra.

Ripon Law College.

De, Kalipada.

University Law College.

Deb, Ajitnarayan.
,, Bindumadhab.
,, Ramnarayan.
Deka, Dharmanath.

Ripon Law College.

Dhar, Abinaschandra.
,, Adhirchandra.

University Law College.

Dhar, Manindralal.
,, Nirmalkumar.

Ripon Law College.

Gajendramahapatra, Dhirendranath.

University Law College.

Gangopadhyay, Hiralal
,, Sachikanta.
Ghosh, Bimalkumar.
,, Himansuranjan.

Non-collegiate student (University Law College).

Ghosh, Jyotsana.

University Law College.

Ghosh, Makhanlal.
,, Mohinimohan
,, Rabindranath.
,, Sajanikanta.
,, Sasankabhushan.

Ripon Law College.

Ghosh, Sitansusekhar.

University Law College.

Ghosh, Subratakumar.
,, Sunilkrishna.
Ghoshal, Anilchandra.
,, Barindrakumar.

Non-collegiate student (University Law College).

Girijashanker Awasthi.

University Law College.

Gomta, Timothy R.
Goswami, Charuchandra.
Guha, Sukhendubikas.
Guharay, Sudhirkumar.

Ripon Law College.

Gupta, Kamalakanta.

University Law College.

Hajra, Bishnupada.
Kar, Debiprasad.
Jiwan Malla Kochar.
Jogendra Prasad Shukla.
Kanungo, Sailendraprasad.
Kayal, Surendranath.
Kanjilal, Praphullakumar.
Lahiri, Bhabeschandra.

Non-collegiate student (Ripon Law College).

Lahiri, Jyotirmay.

University Law College.

Laik, Chandranarayan.
,, Narayanchandra.
Lakkarazu Dattatreya Sarma.
Lakshmi Narayan Mishra.

Non-collegiate student (University Law College).

Lakshmiprasad Awasthy.

University Law College.

Mahajan, Bhubanmohan.
Mahammod Ullah.
Maitra, Kalipada.
,, Rabindranath.

Ripon Law College.

Majed Ali Khan.

University Law College.

Majumdar, Bhupendranarayan,
,, Haridas.
,, Hirendramohan.

Ripon Law College.

Majumdar, Jogendrakumar.

University Law College.

Majumdar, Rasbihari.
,, Subodhchandra.
Mallik, Praphullakumar.
Mandal, Basudeb.
,, Kshitischandra.

Ripon Law College.

Matthews, I. K.
Md. Habibar Rahman.
Md. Ismail Hossain.
Md. Khalil Uddin Miah.
Mitra, Amarlal.

University Law College.

Mitra, Krishnakumar.
,, Santoshkumar.
Muhammad Akram Ali.
Mukhopadhyay, Anilbhushan.
,, Atuleswar.
,, Jayantakumar.
,, Krishnapada.
,, Nisithranjan.
,, Rajendrakumar.
,, Ranjitkumar.

Ripon Law College.

Munshi Abdul Ali.
Mutsuddi, Sunilkanti.
N. K. N. Aiyengar.

University Law College.

Nag, Taritkumar.
Nandi, Amarnath.
,, Gopinath.
Nathmal Himatsingka.
Niyogi, Saradindukumar.

Earle Law College, Gauhati.

Nowa, Rymbai.

Ripon Law College.

Nowajesh Ahmed.

University Law College.

Pain, Bhabeschandra.
Pal, Jitendrakisor.

Ripon Law College.

Pal, Manoranjan.

Earle Law College, Gauhati.

Phukan, Kusumkumar.

University Law College.

Poddar, Rajmohan.

Ripon Law College.

Purkait, Saurindramohan.
Rajbansi, Surendranath.

University Law College.

Ram Pujan Rai.

Ripon Law College.

Rashiduzzaman Ahmed.
170 Ray, Anadibhushan.

University Law College.

Ray, Debaprasad.
" Hemendralal.
" Himansubhushan.
" Jatindranath.
" Jyotirmay.
" Pannalal.

Ripon Law College.

Ray, Praphullachandra.

University Law College.

Ray, Santoshkumar.
" Subimalchandra.
180 Raychaudhuri, Gurugati.

Non-collegiate student (University Law College).

Raychaudhuri, Nripendranath.

Ripon Law College.

Raychaudhuri, Sisirkumar.

University Law College.

Raychaudhuri, Sudhansukumar.
Saha, Krishnabandhu.
" Manmathanath.
" Manoharan.
" Tarakchandra.
Sannigrahi, Adityanath.
Sardar, Anandamohan.

Ripon Law College.

190 Sarkar, Gaurgopal.

Non-collegiate student (Roll Deoli N. 1).

Sarkar, Surendranath.

University Law College.

Sarma, Ray Sibendranarayan.
Sen, Bhabaranjan.
" Hemeschandra.
" Krishnagopal.
" Pranabkumar.
" Rabindranath.
Sengupta, Haripada.
" Jagannath.

Ripon Law College.

200 Sengupta, Narendrnath.

University Law College.

Sengupta, Nirmalkumar.

Ripon Law College.

Shah Nazimul Huq.

University Law College.

Shamsuddin Hafeez.
Shivanandan Ambastha.
Sil, Dulalchand.
" Haricharan.

Non-collegiate student (University Law College).

Sinha, Anilkumar.

University Law College.

Sinha, Prabodhchandra.
" Sudhansumohan.

Non-collegiate student (University Law College).

210 Sk. Ahammad Ali Beg.

Ripon Law College.

Syed Ahsan Ali.

Non-collegiate student (University Law College).

Syed Hashim Ali.

University Law College.

Tafazzal Hossain Khan.

Non-collegiate student (University Law College).

Taraphdar, Bimalapada.

Non-collegiate student (Ripon Law College).

Tripathi, Kamakhyaprasad.

Ripon Law College.

216 Waizuddin.

B. B. DUTT,
Controller of Examinations (offg.).

Rajshahi Division.

NOTIFICATION.

Jalpaiguri, the 22nd March 1935.

Rules for Examination in the Art and Practice of Teaching.

An examination in the Art and Practice of Teaching for the teachers of subjects taught through the medium of English employed in aided and unaided schools in the Rajshahi Division will be held on the 8th May 1935 and the day following, if required, at the Jalpaiguri Zilla School.

The examination for teachers of all subjects taught through the medium of vernacular and oriental classical languages of secondary schools will also be held at the centre on the dates mentioned above.

2. The following teachers are eligible for examination:—

(*a*) Teachers who have passed the Entrance or the Matriculation Examination or some higher examination of a recognised University. The examination of these teachers will be conducted through the medium of English or vernacular according to their option.

(*b*) Teachers of vernacular subjects who have passed the Middle Scholarship Examination or the terminal examination at the end of the middle stage of instruction or the Junior Madrasah Examination. The examination of these teachers will be conducted only in the vernacular.

(*c*) Pandits and Maulvis employed in teaching oriental classical languages other than Pandits in Sanskrit Tols and Maulvis in Madrasahs. They may be permitted to appear at the examination and at their option may be examined either in English or in vernacular.

3. The examination will consist of—

(*a*) A practical test in class control, the candidate being required to keep a class of at least a dozen boys attentive and fully occupied throughout a lesson.

(*b*) A practical test in teaching ability, the candidate being required to give two lessons on any two of the following subjects:—

(*i*) Science, Nature Study, Hygiene, English, Bengali, History, Geography, Arithmetic, Algebra or Geometry.

(*ii*) A written test for one and a half hours in which the Inspector of Schools or other examiners will set questions on the art of teaching, object lesson, class management, organisation and discipline.

4. The following books are recommended:—

(*a*) *For teachers teaching through the medium of vernacular*—

(1) Teachers' Manual by Khan Bahadur Ahsanullah.
(2) Bidyalaya Bisayak Bibidha Bidhan by A. N. Adhikari.
(3) Sikha Bijnan by Khan Bahadur Abdur Rahman Khan.
(4) Byabaharik Manobijnan by S. C. Brahmachari.
(5) Padtika Likhibar Paddhati by Jagannath Dey.

(*b*) *For Matriculate and I.A. passed teachers teaching through the medium of English*—

(1) Talks to Teachers (James).
(2) Mental and Physical Life of School Children by Sandiford.
(3) The Play Way by Cook.
(4) Indian School Organisation by P. Wren.
(5) Indian Teachers' Guide by P. Wren.
(6) Suggestions for the consideration of Teachers—Board of Education, London.
(7) Art of Teaching by Salmon.

(*c*) *For graduate teachers teaching through the medium of English*—

Nos. (1), (2), (4), (5) and (6) under Group (*b*), and the following books:—

(1) Education on Dalton Plan by Parkhurst.
(2) Principles of Education by Ruediger —George G. Harrap & Co., London.
(3) General Methods of Teaching—By Parker-Ginn & Co.

5. Intending candidates from High Schools, Government, aided and unaided, should send in their applications to this office through the Head Masters of the respective schools in which they are employed, at least one month before the date of examination and teachers of Middle Schools and Junior Madrasahs through the District Inspector of Schools at least four weeks before the date. Every candidate will be required to produce his University or other certificates at the time of examination. A statement containing information on the following points should accompany the application:—

(1) Name in full.
(2) Father's name in full.
(3) Age on the 1st May 1935.
(4) Native district, subdivision, village, post office.
(5) The last examination which the candidate passed and the year of passing.
(6) Period of service as a teacher.
(7) Present appointment with date (mention whether he is a teacher of English subjects or vernacular subjects or of oriental languages). Mention also the language through the medium of which the candidate wants to be examined.
(8) Two classical subjects which the candidate wishes to offer for practical test in teaching.
(9) Signature of the candidate.

6. Every candidate must bring with him at the time of examination two lesson notes on the subjects in which he wishes to give lessons. These notes should be made over to the examiner at the time of the practical examination. Candidates should state whether they sat for the examination previously, if so, how often.

K. AHMED,

Inspector of Schools, Rajshahi Division.

NOTIFICATION.

Calcutta, the 21st March 1935.

Owing to the Silver Jubilee Celebrations the dates of the ensuing Central Madrasah Examinations, Bengal, published in notification, dated 6th December 1934, in the *Calcutta Gazette* are changed as follows :—

Fazil (Higher Standard) and Alim (Lower Standard) Examinations, 1935.

Forenoon—10 a.m. to 1 p.m.

Afternoon—2 p.m. to 5 p.m.

1935.

Tuesday, the 23rd April ..	Hadis (forenoon). Tafsir (afternoon).
Wednesday, the 24th April	Arabic Poetry (forenoon). Arabic Prose (afternoon).
Thursday, the 25th April ..	Rhetoric (forenoon). Arabic Composition (afternoon).
Saturday, the 27th April ..	Muhammadan Law (forenoon). Principles of Muhammadan Law (afternoon).
Monday, the 29th April ..	Logic (forenoon). Philosophy (afternoon).
Tuesday, the 30th April ..	History of Islam (forenoon). Theology (Aqayid) for Fazil only (afternoon).
Wednesday, the 1st May ..	English Text (forenoon). English Translation and Essay (afternoon).
Thursday, the 2nd May ..	Persian Text (forenoon). Persian Translation (afternoon).
Saturday, the 4th May ..	Urdu Text (forenoon). Urdu Composition and Essay (afternoon).

The Title Examinations, 1935.

Group " A "—Hadis and Tafsir.

Group " B "—Fiqh and Usul.

Groups " A " and " B ".

1935.

Tuesday, the 23rd April ..	Bukhari, Part I (forenoon). Bukhari, Part II (afternoon).

Group " A ".

Thursday, the 25th April ..	Muslim, Part I (forenoon). Muslim, Part II (afternoon)

Group " B ".

Maaniul Asar (forenoon).
Uqudul Jawahir (afternoon).

Group " A ".

Saturday, the 27th April ..	Tafsir, Part I (forenoon). Tafsir, Part II (afternoon).

Group " B ".

Principles of Muhammadan Law, Part I (forenoon).

Principles of Muhammadan Law, Part II (afternoon).

Group " A ".

Monday, the 29th April ..	Nisai, Part I (forenoon). Nisai, Part II (afternoon).

Group " B ".

Monday, the 29th April ..	Aqayid, Part I (forenoon). Aqayid, Part II (afternoon).

Groups " A " and " B ".

Wednesday, the 1st May ..	History of Islam, Part I (forenoon). History of Islam, Part II (afternoon).

M. MUSA,

Registrar, Board of Central Madrasah Examinations, Bengal, and Principal, Calcutta Madrasah.

Pleaders' Survey Examination Board.

Bengal Engineering College, the 21st March 1935.

The following are declared to have passed the Examination of Pleaders for the Certificate of Proficiency in Surveying prescribed in Bengal Government notification No. 315J., dated the 25th November 1909, held in February 1935 :—

Names of pleaders and centre of examination.	Court at which practising.
B. E. College Centre.	
Ashutosh Mukherjee ..	Judge's Court, Alipore.
Dhonesh Chandra Mitra ..	Judge's Court, Alipore.
Mononit Krishna Biswas ..	Judge's Court, Howrah.
Becharam Bhattacherjee ..	Munsif's Court, Bishnupur, district Bankura.
Md. Phul Khan	Judge's Court, Alipore.
Dacca Centre.	
Narendra Kumar Mukhopadhyay.	Judge's Court, Dacca.
Jagadish Chandra Datta ..	Judge's Court, Sylhet.
Dhiraj Kumar Datta Roy ..	Munsif's Court, Brahmanbaria, district Tippera.
Jagadish Chandra Bhadra ..	Munsif's Court, Bhanga, district Faridpur.
Binode Ranjan Mittra ..	Munsif's Court, Gopalganj, district Faridpur.
Basanta Kumar Chakravarti	Judge's Court, Mymensingh.
Dinesh Chandra Sarkar ..	Munsif's Court, Patuakhali, district Barisal.
Anath Bandhu Das ..	Judge's Court, Dacca.
Jatindra Kumar Mitra ..	Judge's Court, Dacca.
Manoranjan Mukherjee ..	Munsif's Court, Gopalganj, district Faridpur.
Bhupendra Mohan Bhowmik	Munsif's Court, Chikandi, district Faridpur.
Robindra Kumar Basak ..	Judge's Court, Dacca.
Patna Centre.	
Pankaj Kumar Banerjee ..	Patna.
Indra K. Prosad ..	Purnea.
Ram Awadh Narayan Sinha	Gumla, Ranchi.
Ambica Pd. Sinha ..	Gaya.
Narayan Devedi ..	Arrah.
Md. Safiur Rahaman ..	Arrah.
Pande Brojnandan Kumar ..	Arrah.

A. MACDONALD, *Secretary.*

Pleaders' Survey Examination Board.

Education Department, Bengal.

NOTIFICATION.

No. 1T.B.—18th March 1935.—In continuation of this office notification No. 8T.B., dated 5th July 1934, it is hereby notified for general information that text books on Hygiene written in accordance with the revised curriculum for Primary Schools for boys and girls in this Presidency, published with Government (Education Department) notification No. 1665Edn., dated the 16th November 1920, will be received by the Secretary, Provincial Text Book Committee (Writers' Buildings, Block No. V, First Floor, Room No. 2), Calcutta, from the 5th to 10th June 1935, in the following manner:—

Text books for pupils.

(1) Class II.—A *single* text book on Hygiene (illustrated)—Covering the syllabuses prescribed for Class II of Primary Schools for boys and girls.

(2) Classes III and IV.—Two *separate* text books on Hygiene (illustrated)—viz., (*i*) one covering the syllabuses prescribed for Classes III and IV of Primary Schools for boys and (*ii*) the other covering the syllabuses prescribed for Classes III and IV of Primary Schools for girls.

N.B.—(*a*) The above arrangements will apply to text books on Hygiene for Classes II-IV of Moslem Primary Schools (Maktabs) for boys and girls called for in this office notification No. 9T.B., dated 5th July 1934.

(*b*) A further notification giving all details for the submission of books will be published later.

J. M. BOTTOMLEY,
Director of Public Instrn., Bengal.

Education Department, Bengal.

NOTIFICATION.

Calcutta, the 21st March 1935.

Post-Graduate Research Scholarships to be awarded in 1935.

Three Post-Graduate Scholarships will be awarded for the encouragement of original research to candidates who have high and special qualifications and appear to be likely to conduct original research with success. The value of each scholarship is Rs. 75 a month.

2. Ordinarily one scholarship will be awarded annually to a student who proposes to carry on original research in scientific subjects, including such branches as natural and physical science, chemistry, mathematical science, etc., and another scholarship will similarly be awarded for research in literary subjects, including such branches as languages, comparative philology, palæography, epigraphy, philosophy, history, archæology, anthropology, etc., and the third scholarship will be awarded for research either in scientific or in literary subjects. No application for a research scholarship will be considered unless a candidate submits certificates showing that he has the capacity for undertaking the research proposed and a programme of work indicating a definite course of enquiry.

3. Election will be made in the first instance for one year only, with effect from the 1st July 1935, but a scholarship may be renewed from year to year up to the limit of three years, provided the scholar has throughout the year vigorously prosecuted original research in the subject selected by him.

4. Each candidate for a scholarship should submit his application, through the head of the institution in which he last studied, to the Director of Public Instruction, Bengal, on or before the 10th May next, and must produce evidence of having passed from a College or other institution in Bengal the M.A. or M.Sc. examination of the Calcutta or Dacca University, or of having obtained some other equivalent or higher degree of either of these Universities in 1932 or 1933 or 1934. He must state as definitely as possible the subject or part of a subject in which he intends, if elected to a scholarship, to carry on his original investigation. He must also state the name of the institution in which he proposes to work, with evidence that the authorities of the institution are able and willing to provide facilities for him, or if no institution is mentioned, the circumstances or conditions under which he proposes to work should be stated.

5. Each candidate is required to submit with his application a declaration to the effect that, if selected, he will not study law or prepare himself for any competitive examination during the tenure of his scholarship.

6. Applications for this year's scholarships should be submitted in prescribed forms which are obtainable from the Personal Assistant to the Director of Public Instruction, Writers' Buildings, Calcutta.

J. M. BOTTOMLEY,
Director of Public Instrn., Bengal.

Office of the Inspectress of Schools, Dacca Circle.

NOTIFICATION.

Dacca, the 21st March 1935.

In the list of girls who were awarded Primary Preliminary Scholarship with effect from January 1934, published under this office notification, dated 13th December 1933, at pages 1349-1350 in Part IB of the *Calcutta Gazette* of the 21st December 1933—

For

Syeda Khatun	Sadhanpur Girls' Maktab, Bashgari.	Sadhanpur M. E. School, Chittagong.

please *read*

Sajeda Khatun	Sadhanpur Girls' Maktab, Bashgari.	Sadhanpur M. E. School, Chittagong.

S. BISWAS,
Inspectress of Schools, Dacca Circle (offg.).

Registered No. C207

The Calcutta Gazette

THURSDAY, MARCH 28, 1935.

PART II

Advertisements.

Notices.

Advertisements, Notices, etc., intended for insertion in is part of the Gazette should be sent to Press not later than 12 noon on Saturday, and all costs deposited and proofs returned by 12 noon on Monday. All manuscripts and postal remittances must be addressed to Superintendent, Government Printing, Bengal Government Press, Alipore. For the convenience, however, of parties or firms located in Calcutta cash payments of Advertisement charges may be made at Publication Sales Office, Room No. 2, Ground Floor, Writers' Buildings, Calcutta.

Land Sale Notice.

Advertisement of sale.

NOTICE is hereby given that the undermentioned plots of land, no longer required by Government situated in the village of Sujanagar, in the district of Midnapore, will be put up to sale at 8 o'clock on Friday, the 10th May 1935, at Midnapore Collectorate, in the Court of the Collector of Midnapore :—

The purchaser of the plot of land will be subject to the following conditions :—

1st—If the amount of purchase-money does not exceed Rs. 100 the whole amount must be paid down at once.

2nd—If the amount of purchase-money exceeds Rs. 100, one-fourth of the amount must be immediately deposited, if the balance be not paid by noon of the fifteenth day after the sale, reckoning the day of sale as one, or if that day be a close holiday, then by noon of the first succeeding office day, the sale shall be cancelled, the sum deposited being forfeited to Government, and the lot again put up for sale at the risk of the defaulting purchaser, after issue of advertisement, as in the case of original sale.

3rd—The plots of land will be sold revenue-free to the highest bidders.

4th—The purchasers shall be put in possession on receipt by the Collector of the orders of the Commissioner of the Burdwan Division.

Consecutive Lot Number.	Name of district.	Pargana and mauza.	Approximate area of plot in bighas and in acres.		Description of lot.
1	2	3	4		5
			B. K. Ch.	Acre.	
1	Midnapore ..	Pargana Chetua, village Sujanagar, thana Daspur.	..	0·24 of an acre.	J. L. No. 53, thana Daspur, district settlement plot Nos. 131, 132, and portions of district settlement plot Nos. 129, 135 and 136 of mauza Sujanagar.

Midnapore, the 11th March 1935.

P. J. GRIFFITHS, Collector.

In the High Court of Judicature at Fort William in Bengal, in insolvency.

NOTICE OF ADJUDICATION ORDER.

No. 23 of 1935.

Re Dharam Chand Dashani, a firm carrying on business in piecegoods at No. 113, Monohardas Street, also known as Monohardas Katra, in the town of Calcutta, *ex parte* the creditor.

P. C. De, creditor-firm's solicitor.

ON the 26th day of February 1935, an order was made by the High Court of Judicature at Fort William in Bengal in its insolvency jurisdiction adjudging the abovenamed firm as an insolvent.

Note.—All debts due to the estate should be paid to me.

Dated this 21st day of March 1935.

G. M. FALKNER, Official Assignee.

In the High Court of Judicature at Fort William in Bengal, in insolvency.

NOTICE OF ADJUDICATION ORDER.

No. 30 of 1935.

Re Robert Henry Roberts, residing at No. 6, Sudder Street, in the town of Calcutta, employed as an Assistant in the office of Messrs. Bird & Co., in the Chartered Bank Building, Calcutta, *ex parte* the debtor in person.

ON the 13th day of March 1935 an order was made by the High Court of Judicature at Fort William in Bengal in its insolvency jurisdiction adjudging the abovenamed as an insolvent.

Note.—All debts due to the estate should be paid to me.

Dated this 14th day of March 1935.

G. M. FALKNER, Official Assignee.

In the Court of the Sub-Judge at Asansol.

Section 19 (*2*) of the Provincial Insolvency Act.

INSOLVENCY CASE No. 53 OF 1934.

NOTICE is hereby given to his creditors that the insolvency petition filed by Kasiram Chandra Bansi has been admitted and the 5th April 1935 has been fixed for hearing thereof.

K. BANERJI, Sub-Judge.

Asansol, the 23rd February 1935. (740—1)

In the Court of the Sub-Judge at Asansol.

Section 19 (*2*) of the Provincial Insolvency Act.

INSOLVENCY CASE No.1 OF 1935.

NOTICE is hereby given to his creditors that the insolvency petition filed by Khudiram Mandal and Mahendra Mandal has been admitted and the 5th April 1935 has been fixed for hearing thereof.

K. BANERJI, Sub-Judge.

Asansol, the 16th February 1935. (741—1)

In the Court of the Sub-Judge at Asansol.

Section 19(*2*) of the Provincial Insolvency Act.

INSOLVENCY CASE No. 7 OF 1935.

NOTICE is hereby given to his creditors that the insolvency petition filed by Golak Nath Roy has been admitted and the 29th March 1935 has been fixed for hearing thereof.

K. BANERJI, Sub-Judge.

Asansol, the 27th February 1935. (742—1)

In the Court of the District Judge of Burdwan.

INSOLVENCY CASE No. 5 OF 1935.

NOTICE is hereby given to the creditors that the insolvency petition filed by Shaikh Mohammad Idris, son of late Shaikh Shabakatulla, of Barar, police-station Memari, district Burdwan, has been admitted and that the 5th day of April 1935 has been fixed for hearing of the petition.

G. G. HOOPER, District Judge.

Burdwan, the 19th March 1935. (814—1)

In the Court of the District Judge of Burdwan.

INSOLVENCY CASE No. 4 OF 1935.

NOTICE is hereby given to the creditors that the insolvency petition filed by Rampada Dutta, son of late Sukhamay Dutta, of Kallyanpur, police-station Memari, district Burdwan, has been admitted and that the 1st day of April 1935 has been fixed for hearing of the petition.

G. G. HOOPER, District Judge.

Burdwan, the 19th March 1935. (815—1)

In the 3rd Court of the Sub-Judge, Dacca.

INSOLVENCY CASE No. 22 OF 1935.

Radha Gobinda Ban Behari Das, firm, carrying on business in partnership at 104, Walter Road, police-station Sutrapur, district Dacca, creditor-petitioner,

versus

Sudhai Bepari carries on business at Jajira, police-station Keraniganj, district Dacca, debtor, opposite party.

NOTICE is hereby given to all that the abovenamed petitioner has filed a petition for insolvency for adjudging the debtor, opposite party, an insolvent in this Court on 12th February 1935, and the date of hearing has been fixed on 30th March 1935 for examination of the petitioner.

R. C. SEN, Sub-Judge.

Dacca, the 12th March 1935. (757—1)

In the 3rd Court of the Sub-Judge, Dacca.

INSOLVENCY CASE No. 93 OF 1934.

Kali Charan Shaha, son of late Mahaprasad Shaha, of Shabhar, police-station Shabhar, district Dacca.

NOTICE is hereby given to all that the abovenamed petitioner has filed a petition for insolvency in this Court on 4th October 1934, and the date of hearing has been fixed on 30th March 1935 for examination of the petitioner.

R. C. SEN, Sub-Judge.

Dacca, the 12th March 1935. (758—1)

In the Court of the Deputy Commissioner at Darjeeling.

INSOLVENCY CASE No. 1 OF 1935.

Sree Bhakta Thakuri of Git Geong Block of Kalimpong Khasmahal, Kalimpong, Darjeeling, petitioner.

WHEREAS the abovenamed petitioner has applied to this Court by a petition to be declared insolvent and the Court has fixed the 29th March 1935 for hearing of the petition. Any one desiring to be represented in the matter may appear in person or by a duly authorised pleader before the undersigned on the date fixed.

B. C. SEN, *for* Deputy Commissioner.

Darjeeling, the 18th March 1935. (811—1)

In the Court of the District Judge of Faridpur.

INSOLVENCY CASE No. 188 OF 1934.

(1) Mamin Mandal, son of late Meru Mandal, and (2) Kamiraddi Mandal, son of late Adel Mandal, of Babupur, police-station Pangsa, district Faridpur, debtor-petitioners.

NOTICE is hereby given that the abovenamed debtor-petitioners have applied to this Court for being adjudged insolvents, and the 11th April 1935 has been fixed for the hearing of the application.

S. K. GUPTA, District Judge.

Faridpur, the 12th March 1935. (759—1)

In the Court of the District Judge of Faridpur.

INSOLVENCY CASE No. 160 OF 1934.

Faju Sheik, son of late Bishu Sheik, of Tenai, police-station Baliakandi, district Faridpur, debtor-petitioner.

NOTICE is hereby given that the abovenamed debtor-petitioner has applied to this Court for being adjudged insolvent, and the 11th April 1935 has been fixed for the hearing of the application.

S. K. GUPTA, District Judge.

Faridpur, the 12th March 1935. (760—1)

In the Court of the District Judge of Faridpur.

INSOLVENCY CASE No. 4 OF 1935.

Fulja Khatun, wife of Nazem Haoladar, of Kumarkhali, police-station Bhanga, district Faridpur, debtor-petitioner.

NOTICE is hereby given that the abovenamed debtor-petitioner has applied to this Court for being adjudged insolvent, and the 8th April 1935 has been fixed for the hearing of the application.

S. K. GUPTA, District Judge.

Faridpur, the 13th March 1935. (761—1)

In the Court of the District Judge of Hooghly.

INSOLVENCY PETITION No. 2 OF 1935.

NOTICE is hereby given that Sasti Charan Banerji, son of late Ram Sankar Banerji, of Duttapara, thana Tarakeswar, district Hooghly, was on the 19th February 1935 adjudged an insolvent. The 19th May 1935 has been fixed for framing a schedule and creditors are required to prove their claims on that day.

S. SEN, District Judge.

Chinsura, the 5th March 1935. (695—1)

In the Court of the District Judge of Hooghly.

INSOLVENCY PETITION No. 57 OF 1934.

NOTICE is hereby given that Jayahir Lal Bhakat, son of late Gazadhar *alias* Manuki Bhakat, of Sheorafully, thana Serampore, district Hooghly, was on the 9th January 1935 adjudged an insolvent. The 9th April 1935 has been fixed for framing a schedule and creditors are required to prove their claims on that date.

S. SEN, District Judge.

Chinsura, the 8th March 1935. (697—1)

In the Court of the District Judge of Hooghly.

INSOLVENCY PETITION No. 104 OF 1934.

NOTICE is hereby given that Suchand Samanta, son of late Dinanath Samanta, of Kamarpara Road, thana Chinsura, district Hooghly, was on the 9th January 1935 adjudged an insolvent. The 9th April 1935 has been fixed for framing a schedule and creditors are required to prove their claims on that date.

S. SEN, District Judge.

Chinsura, the 8th March 1935. (698—1)

In the Court of the District Judge of Hooghly.

NOTICE is hereby given, under clause (2) of section 12 of the Provincial Insolvency Act, V of 1920, to his creditors that the insolvency petition of Nanilal Sadhukhan, son of late Purna Chandra Sadhukhan, of Sija, thana Balagari, district Hooghly, has been admitted by this Court as No. 11 of 1935 and that the 10th April 1935 has been fixed for the hearing thereof.

S. SEN, District Judge.

Chinsura, the 13th March 1935. (805—1)

In the Court of the District Judge of Hooghly.

NOTICE is hereby given, under clause (2) of section 12 of the Provincial Insolvency Act, V of 1920, to his creditors that the insolvency petition of Upendranath Mondal, son of Paramananda Mondal, of Jagannathpore, thana Dhaniakhali, district Hooghly, has been admitted by this Court as No. 12 of 1935 and that the 10th April 1935 has been fixed for the hearing thereof.

S. SEN, District Judge.

Chinsura, the 13th March 1935. (807—1)

In the Court of the District Judge of Hooghly.

NOTICE is hereby given, under clause (2) of section 12 of the Provincial Insolvency Act, V of 1920, to his creditors that the insolvency petition of Ackkouri Ghosh, son of late Muktaram Ghosh, of Jagannathpore, thana Dhaniakhali, district Hooghly, has been admitted by this Court as No. 13 of 1935 and that the 11th April 1935 has been fixed for the hearing thereof.

S. SEN, District Judge.

Chinsura, the 13th March 1935. (808—1)

In the Court of the District Judge of Hooghly.

NOTICE is hereby given, under clause (2) of section 12 of the Provincial Insolvency Act, V of 1920, to his creditors that the insolvency petition of Jatindranath Konar, son of late Rajendranath Konar, of Makhandehi, thana Pandua, district Hooghly, has been admitted by this Court as No. 14 of 1935 and that the 6th April 1935 has been fixed for the hearing thereof.

S. SEN, District Judge.

Chinsura, the 13th March 1935. (809—1)

In the Court of the Addl. District Judge of Hooghly at Howrah.

NOTICE is hereby given, under the Provincial Insolvency Act, V of 1920, to his creditors that the insolvency petition of Ashutosh Ghosh, son of late Rai Charan Ghosh, of 4, Nabin Banerjee Lane, thana Shibpur, district Howrah, has been admitted by this Court as No. 44 of 1935, and that the 28th March 1935 has been fixed for the hearing thereof.

S. N. MODAK, Addl. District Judge.

Howrah, the 8th March 1935. (751—1)

In the Court of the Addl. District Judge of Hooghly at Howrah.

INSOLVENCY PETITION No. 184 OF 1932.

NOTICE is hereby given that Bibhuti Bhusan Chatterjee, son of late Hari Charan Chatterjee, of Khuroot Road, thana Shibpur, district Howrah, was on the 4th April 1934 adjudged an insolvent. The 5th day of April 1935 has been fixed for hearing the final discharge application.

S. N. MODAK, Addl. District Judge.

Howrah, the 11th March 1935. (752—1)

In the Court of the District Judge of Khulna.

INSOLVENCY CASE No. 2 OF 1935.

IT is hereby notified that (1) Upendra Nath Biswas, (2) Jogendra Nath Biswas, sons of late Haladhar Biswas, (3) Bijay Kumar Biswas, (4) Bimal Chandra Biswas and (5) Birendra Nath Biswas, sons of late Rati Kanta Biswas, of Khalishpur, police-station Daulatpur, district Khulna, have filed a petition for adjudication as insolvents on 1st March 1935 and the 2nd day of April 1935 has been fixed for hearing of the same.

K. C. CHUNDER, District Judge.

Khulna, the 19th March 1935. (818—1)

In the Court of the District Judge of Bogra.

INSOLVENCY CASE No. 2 OF 1935.

WHEREAS Fulbar Sarder, son of Jhagru Sarder, of Isua, police-station Joypurhat, district Bogra, has applied to this Court by a petition, dated the 26th February 1935, to be declared insolvent, this is to give notice to all his creditors that the Court has fixed 30th March 1935 for hearing of the aforesaid petition and for examination of the debtor.

S. C. MUKHERJI, *Ex-officio* Registrar.

Bogra, the 11th March 1935. (738—1)

In the Court of the District Judge of Bogra.

INSOLVENCY CASE No. 3 OF 1935.

WHEREAS Kanaiyalal Seraogi, son of Ramlal Seraogi, of Arofshor, police-station Chetaoya, district Sambor, at present residing in the Bogra town, police-station and district Bogra, has applied to this Court by a petition, dated the 27th February 1935, to be declared insolvent, this is to give notice to all his creditors that the Court has fixed 30th March 1935 for hearing of the aforesaid petition and for examination of the debtor.

S. C. MUKHERJI, *Ex-officio* Registrar.

Bogra, the 11th March 1935. (739—1)

In the Court of the District Judge of Pabna and Bogra.

INSOLVENCY CASE No. 23 OF 1934.

NOTICE is hereby given that insolvent Ayenuddin Sarkar, son of late Alam Sarkar, of Diar Dhangara, police-station Serajganj, district Pabna, has applied for his final discharge and the 8th April 1935 has been set down for hearing of the application.

B. K. BASU, District Judge.

Pabna, the 11th March 1935. (747—1)

In the Court of the District Judge of Rangpur.

INSOLVENCY CASE No. 13 OF 1931.

NARENDRA NATH GANGULI, son of late Harihar Ganguli, of Gopalpur, police-station Badarganj, in the district of Rangpur, was on the 2nd February 1935 finally discharged by this Court.

P. C. DE, District Judge.

Rangpur, the 12th March 1935. (746—1)

ORDER OF ADJUDICATION.

Section 27 of the Provincial Insolvency Act, V of 1920.

In the Court of the District Judge at Alipore.

INSOLVENCY APPLICATION No. 30 OF 1934.

PURSUANT to a petition, dated 10th July 1934, filed by Brojo Gopal Goswami, of 12, Ram Kamal Street, Kidderpore, 24-Parganas, debtor, and on the application of the debtor himself and on reading his application and on hearing his pleader, it is ordered that the debtor be and the said debtor is hereby adjudged insolvent.

It is further ordered that the debtor do apply for his discharge on 16th December 1935.

Dated this 25th day of February 1935.

T. H. ELLIS, District Judge.

(732—1)

ORDER OF ADJUDICATION.

Section 27 of the Provincial Insolvency Act, V of 1920.

In the Court of the District Judge at Alipore.

INSOLVENCY APPLICATION No. 37 OF 1934.

PURSUANT to a petition, dated 13th August 1934, filed by Harry Figg, of 87, Barrackpore, police-station Barrackpore, 24-Parganas, debtor, and on the application of the debtor himself and on reading his application and hearing his pleader, it is ordered that the debtor be and the said debtor is hereby adjudged insolvent.

It is further ordered that the debtor do apply for his discharge on 9th December 1935.

Dated this 25th day of February 1935.

T. H. ELLIS, District Judge.

(733—1)

NOTICE TO CREDITORS OF APPLICATION FOR DISCHARGE.

Section 41 (*1*) of the Provincial Insolvency Act, V of 1920.

In the Court of the District Judge at Alipore.

INSOLVENCY CASE No. 15 OF 1934.

J. H. Isaac of 134, Loco quarters, Belgatchia, 24-Parganas, applicant.

TAKE notice that the abovenamed insolvent has applied at the Court for his discharge, and that the Court has fixed the 8th day of April 1935 at 11 o'clock for hearing the application.

Dated this 11th day of March 1935.

T. H. ELLIS, District Judge.

(748—1)

In the 4th Court of the Sub-Judge of 24-Parganas.

INSOLVENCY CASE No. 31 OF 1935.

Shaik Motaleb of Sodepur, police-station Behala, 24-Parganas, applicant.

To Nara Singha Das Agarwala of 23, Garanhata Street, Calcutta, and others, creditors.

ON the 15th day of February 1935 it was ordered that the matter of the petition of the applicant be heard on the 8th day of April 1935, and that the said applicant do attend to be examined by this Court on that date.

J. N. SEN, Sub-Judge.

Alipore, the 18th February 1935. (582—1)

In the 4th Court of the Sub-Judge of 24-Parganas.

INSOLVENCY CASE No. 61 OF 1935.

Debendra Lal Mistry of 182, Harish Mukherjee Road, Bhowanipore, 24-Parganas, applicant.

To Bholanath Sha of 2D, Panditia Road, Kalighat, Calcutta, and others, creditors.

ON the 14th day of February 1935 it was ordered that the matter of the petition of the applicant be heard on the 8th day of April 1935, and that the said applicant do attend to be examined by this Court on that date.

J. N. SEN, Sub-Judge.

Alipore, the 18th February 1935. (586—1)

NOTICE TO CREDITORS OF APPLICATION FOR DISCHARGE.

Section 41(*1*) of the Provincial Insolvency Act, V of 1920.

In the 4th Court of the Sub-Judge at Alipore.

INSOLVENCY CASE No. 176 OF 1934.

Dhanapati Bor of Baishatta, Joynagore, 24-Parganas, applicant.

TAKE notice that the abovenamed insolvent has applied at the Court for his discharge, and that the Court has fixed the 8th day of April 1935, at 11 o'clock, for hearing the application.

Dated this 18th day of February 1935.

J. N. SEN, Sub-Judge.

(589—1)

NOTICE TO CREDITORS OF APPLICATION FOR DISCHARGE.

Section 41(*1*) of the Provincial Insolvency Act, V of 1920.

In the 4th Court of the Sub-Judge at Alipore.

INSOLVENCY CASE No. 177 OF 1934.

Debendra Nath Mondal of Baishatta, Joynagore, 24-Parganas, applicant.

TAKE notice that the abovenamed insolvent has applied at the Court for his discharge, and that the Court has fixed the 8th day of April 1935, at 11 o'clock, for hearing the application.

Dated this 18th day of February 1935.

J. N. SEN, Sub-Judge.

(590—1)

NOTICE TO CREDITORS OF APPLICATION FOR DISCHARGE.

Section 41(*1*) of the Provincial Insolvency Act, V of 1920.

In the 4th Court of the Sub-Judge at Alipore.

INSOLVENCY CASE No. 178 OF 1934.

Bhim Chandra Mondal of Baishatta, Joynagore, 24-Parganas, applicant.

TAKE notice that the abovenamed insolvent has applied at the Court for his discharge, and that the Court has fixed the 8th day of April 1935, at 11 o'clock, for hearing the application.

Dated this 18th day of February 1935.

J. N. SEN, Sub-Judge.

(591—1)

ORDER OF ADJUDICATION.

Section 27 of the Provincial Insolvency Act, V of 1920.

In the 4th Court of the Sub-Judge at Alipore.

INSOLVENCY APPLICATION No. 250 OF 1934.

PURSUANT to a petition, dated 15th June 1934, filed by Joggan Bhar of Titagarh, 24-Parganas, debtor, and on the application of the debtor himself and on reading his application and hearing his pleader, it is ordered that the debtor be and the said debtor is hereby adjudged insolvent.

It is further ordered that the debtor do apply for his discharge within six months from this date.

Dated this 12th day of February 1935.

J. N. SEN, Sub-Judge.

(592—1)

ORDER OF ADJUDICATION.

Section 27 of the Provincial Insolvency Act, V of 1920.

In the 4th Court of the Sub-Judge at Alipore.

INSOLVENCY APPLICATION No. 314 OF 1934.

PURSUANT to a petition, dated 25th July 1934, filed by Sukhu Kalwar of Spence Road, Titagarh, 24-Parganas, debtor, and on the application of the debtor himself and on reading his application and hearing his pleader, it is ordered that the debtor be and the said debtor is hereby adjudged insolvent.

It is further ordered that the debtor do apply for his discharge within six months from this date.

Dated this 15th day of February 1935.

J. N. SEN, Sub-Judge.

(594—1)

ORDER OF ADJUDICATION.

Section 27 of the Provincial Insolvency Act, V of 1920.

In the 4th Court of the Sub-Judge at Alipore.

INSOLVENCY APPLICATION No. 337 OF 1934.

PURSUANT to a petition, dated 8th August1934, filed by C. W. Montiero of 11-A, Haralall Das Street, Entally, 24-Parganas, and on the application of the debtor himself and on reading his application and hearing his pleader, it is ordered that the debtor be and the said debtor is hereby adjudged insolvent.

It is further ordered that the debtor do apply for his discharge within six months from this date.

Dated this 12th day of February 1935.

J. N. SEN, Sub-Judge.

(595—1)

ORDER OF ADJUDICATION.

Section 27 of the Provincial Insolvency Act, V of 1920.

In the 4th Court of the Sub-Judge at Alipore.

INSOLVENCY APPLICATION No. 357 OF 1934.

PURSUANT to a petition, dated 20th August 1934, filed by Kenaram Karmakar of Rajnagore, police-station Basirhat, 24-Parganas, debtor, and on the application of the debtor himself and on reading his application and hearing his pleader, it is ordered that the debtor be and and the said debtor is hereby adjudged insolvent.

It is further ordered that the debtor do apply for his discharge within six months from this date.

Dated this 12th day of February 1935.

J. N. SEN, Sub-Judge.

(596—1)

ORDER OF ADJUDICATION.

Section 27 of the Provincial Insolvency Act, V of 1920.

In the 4th Court of the Sub-Judge at Alipore.

INSOLVENCY APPLICATION No. 399 OF 1934.

PURSUANT to a petition, dated 11th September 1934, filed by Naba Krishna Das of 19, Govinda Ghosal Lane, Bhowanipore, 24-Parganas, debtor, and on the application of the debtor himself and on reading his application and hearing his pleader, it is ordered that the debtor be and the said debtor is hereby adjudged insolvent.

It is further ordered that the debtor do apply for his discharge within six months from this date.

Dated this 12th day of February 1935.

J. N. SEN, Sub-Judge.

(599—1)

ORDER OF ADJUDICATION.

Section 27 of the Provincial Insolvency Act, V of 1920.

In the 4th Court of the Sub-Judge at Alipore.

INSOLVENCY APPLICATION No. 415 OF 1934.

PURSUANT to a petition, dated 17th September 1934, filed by S. E. Mascarenhas of 29-1, Convent Road, Entally, 24-Parganas, debtor, and on the application of the debtor himself and on reading his application and hearing his pleader, it is ordered that the debtor be and the said debtor is hereby adjudged insolvent.

It is further ordered that the debtor do apply for his discharge within six months from this date.

Dated this 12th day of February 1935.

J. N. SEN, Sub-Judge.

(600—1)

ORDER OF ADJUDICATION.

Section 27 of the Provincial Insolvency Act, V of 1920.

In the 4th Court of the Sub-Judge at Alipore.

INSOLVENCY APPLICATION No. 430 OF 1934.

PURSUANT to a petition, dated 24th September 1934, filed by Md. Eusoof Ali of 13, Shamsul Huda Road, Park Circus, 24-Parganas, debtor, and on the application of the debtor himself and on reading his application and hearing his pleader, it is ordered that the debtor be and the said debtor is hereby adjudged insolvent.

It is further ordered that the debtor do apply for his discharge within six months from this date.

Dated this 12th day of February 1935.

J. N. SEN, Sub-Judge.

(601—1)

ORDER OF ADJUDICATION.

Section 27 of the Provincial Insolvency Act, V of 1920.

In the 4th Court of the Sub-Judge at Alipore.

INSOLVENCY APPLICATION No. 442 OF 1934.

PURSUANT to a petition, dated 29th September 1934, filed by Jori Mistry of Bhangore, 24-Parganas, debtor, and on the application of the debtor himself and on reading his application and hearing his pleader, it is ordered that the debtor be and the said debtor is hereby adjudged insolvent.

It is further ordered that the debtor do apply for his discharge within six months from this date.

Dated this 12th day of February 1935.

J. N. SEN, Sub-Judge.

(602—1)

ORDER OF ADJUDICATION.

Section 27 of the Provincial Insolvency Act, V of 1920.

In the 4th Court of the Sub-Judge at Alipore.

INSOLVENCY APPLICATION No. 444 OF 1934.

PURSUANT to a petition, dated 29th September 1934, filed by Leakat Hossain of Paharpur Road, Garden Reach, 24-Parganas, debtor, and on the application of the debtor himself and on reading his application and hearing his pleader, it is ordered that the debtor be and the said debtor is hereby adjudged insolvent.

It is further ordered that the debtor do apply for his discharge within six months from this date.

Dated this 12th day of February 1935.

J. N. SEN, Sub-Judge.

(604—1)

ORDER OF ADJUDICATION.

Section 27 of the Provincial Insolvency Act, V of 1920.

In the 4th Court of the Sub-Judge at Alipore.

INSOLVENCY APPLICATION No. 448 OF 1934.

PURSUANT to a petition, dated 1st October 1934, filed by Gosain Das Chakravarty of 42-15, Canal East Road, Manicktola, 24-Parganas, debtor, and on the application of the debtor himself and on reading his application and hearing his pleader, it is ordered that the debtor be and the said debtor is hereby adjudged insolvent.

It is further ordered that the debtor do apply for his discharge within six months from this date.

Dated this 12th day of February 1935.

J. N. SEN, Sub-Judge.

(605—1)

In the 4th Court of the Sub-Judge of 24-Parganas.

INSOLVENCY CASE No. 542 OF 1934.

Mohoraddi Molla of Hinchabera, police-station Diamond Harbour, applicant.

To Hatem Ali Molla of Mollapuria, police-station Diamond Harbour, and others, creditors.

ON the 25th day of February 1935 it was ordered that the matter of the petition of the applicant be heard on the 8th day of April 1935, and that the said applicant do attend to be examined by this Court on that date.

J. N SEN, Sub-Judge.

Alipore, the 2nd March 1935. (701—1)

In the 4th Court of the Sub-Judge of 24-Parganas.

INSOLVENCY CASE No. 53 OF 1935.

W. A. Graham, working in the French Motor Car Co., Ltd., Lower Circular Road, 24-Parganas, applicant.

To Shaik Wajid Ali of 28, Gangadhar Babu's Lane, Calcutta, and others, creditors.

ON the 18th day of February 1935 it was ordered that the matter of the petition of the applicant be heard on the 8th day of April 1935, and that the said applicant do attend to be examined by this Court on that date.

J. N. SEN, Sub-Judge.

Alipore, the 22nd February 1935. (703—1)

In the 4th Court of the Sub-Judge of 24-Parganas.

INSOLVENCY CASE No. 60 OF 1935.

Kunja Behary Sadhu Khan of Naihati, 24-Parganas, applicant.

To Rakki Meah of Kankinara, 24-Parganas, and others, creditors.

ON the 20th day of February 1935 it was ordered that the matter of the petition of the applicant be heard on the 8th day of April 1935, and that the said applicant do attend to be examined by this Court on that date.

J. N. SEN, Sub-Judge.

Alipore, the 22nd February 1935. (705—1)

In the 4th Court of the Sub-Judge of 24-Parganas.

INSOLVENCY CASE No. 63 OF 1935.

Sree Kissen Shawoo of 56-2, Hazra Road, Ballygunge, 24-Parganas, applicant.

To Rakhaldas Bhattacharjee of 4-B, Benoy Bose Lane, Lansdowne Road, Calcutta, and others, creditors.

ON the 14th day of February 1935 it was ordered that the matter of the petition of the applicant be heard on the 8th day of April 1935, and that the said applicant do attend to be examined by this Court on that date.

J. N. SEN, Sub-Judge.

Alipore, the 22nd February 1935. (707—1)

In the 4th Court of the Sub-Judge of 24-Parganas.

INSOLVENCY CASE No. 65 OF 1935.

Samar *alias* Samar Goala of Kankinara, Jagaddal, 24-Parganas, applicant.

To Abdul Kader Khan of Kankinara, No. 9, Gully, post-office Kankinara, 24-Parganas, and others, creditors.

ON the 22nd day of February 1935 it was ordered that the matter of the petition of the applicant be heard on the 8th day of April 1935, and that the said applicant do attend to be examined by this Court on that date.

J. N. SEN, Sub-Judge.

Alipore, the 25th February 1935. (708—1)

In the 4th Court of the Sub-Judge of 24-Parganas.

INSOLVENCY CASE No. 66 OF 1935.

Rajendra Chandra Chakravarty of 175, Kalighat Road, Bhowanipore, 24-Parganas, applicant.

To Mst. Fajila Khatun of 2, Taltola Lane, Calcutta, and others, creditors.

ON the 20th day of February 1935 it was ordered that the matter of the petition of the applicant be heard on the 8th day of April 1935, and that the said applicant do attend to be examined by this Court on that date.

J. N. SEN, Sub-Judge.

Alipore, the 22nd February 1935. (709—1)

In the 4th Court of the Sub-Judge of 24-Parganas.

INSOLVENCY CASE No. 68 OF 1935.

Indrasan Tewari of Bishu Babu Gully, Kidderpore, 24-Parganas, applicant.

To Dhoramraj Missir of Bhukailash Rajbari, Kidderpore, 24-Parganas, and others, creditors.

ON the 20th day of February 1935 it was ordered that the matter of the petition of the applicant be heard on the 8th day of April 1935, and that the said applicant do attend to be examined by this Court on that date.

J. N. SEN, Sub-Judge.

Alipore, the 22nd February 1935. (710—1)

ORDER OF ADJUDICATION.

Section 27 of the Provincial Insolvency Act, V of 1920.

In the 4th Court of the Sub-Judge at Alipore.

INSOLVENCY APPLICATION No. 296 OF 1934.

PURSUANT to a petition, dated 14th July 1934, filed by Sailendra Nath Sarkar of 3, Bridge Road, Chetla, 24-Parganas, debtor, and on the application of the debtor himself and on reading his application and hearing his pleader, it is ordered that the debtor be and the said debtor is hereby adjudged insolvent.

It is further ordered that the debtor do apply for his discharge within six months from this date.

Dated this 19th day of February 1935.

J. N. SEN, Sub-Judge.

(720—1)

ORDER OF ADJUDICATION.

Section 27 of the Provincial Insolvency Act, V of 1920.

In the 4th Court of the Sub-Judge at Alipore.

INSOLVENCY APPLICATION No. 394 OF 1934.

PURSUANT to a petition, dated 4th September 1934, filed by Augni Kowri of 42, Sutakalppatak, police-station Metiaburz, and on the application of the debtor himself and on reading his application and hearing his pleader, it is ordered that the debtor be and the said debtor is hereby adjudged insolvent.

It is further ordered that the debtor do apply for his discharge within six months from this date.

Dated this 27th day of February 1935.

J. N. SEN, Sub-Judge.

(721—1)

ORDER OF ADJUDICATION.

Section 27 of the Provincial Insolvency Act, V of 1920.

In the 4th Court of the Sub-Judge at Alipore.

INSOLVENCY APPLICATION No. 389 OF 1934.

PURSUANT to a petition, dated 5th September 1934, filed by Salik Ram of Metiabruz Golam Abbas Lane, police-station Metiabruz, and on the application of the debtor himself and on reading his application and hearing his pleader, it is ordered that the debtor be and the said debtor is hereby adjudged insolvent.

It is further ordered that the debtor do apply for his discharge within six months from this date.

Dated this 26th day of February 1935.

J. N. SEN, Sub-Judge.

(722—1)

ORDER OF ADJUDICATION.

Section 27 of the Provincial Insolvency Act, V of 1920.

In the 4th Court of the Sub-Judge at Alipore.

INSOLVENCY APPLICATION No. 413 OF 1934.

PURSUANT to a petition, dated 14th September 1934, filed by Banian Hossain of Baingachha, police-station Habra, 24-Parganas, debtor, and on the application of the debtor himself and on reading his application and hearing his pleader, it is ordered that the debtor be and the said debtor is hereby adjudged insolvent.

It is further ordered that the debtor do apply for his discharge within six months from this date.

Dated this 20th day of February 1935.

J. N. SEN, Sub-Judge.

(723—1)

ORDER OF ADJUDICATION.

Section 27 of the Provincial Insolvency Act, V of 1920.

In the 4th Court of the Sub-Judge at Alipore.

INSOLVENCY APPLICATION No. 419 OF 1934.

PURSUANT to a petition, dated 18th September 1934, filed by Sk. Bhagoo of 7-1, Cooly Tangra 2nd Lane, police-station Entally, and on the application of the debtor himself and on reading his application and hearing his pleader, it is ordered that the debtor be and the said debtor is hereby adjudged insolvent.

It is further ordered that the debtor do apply for his discharge within six months from this date.

Dated this 26th day of February 1935.

J. N. SEN, Sub-Judge.

(724—1)

ORDER OF ADJUDICATION.

Section 27 of the Provincial Insolvency Act, V of 1920.

In the 4th Court of the Sub-Judge at Alipore.

INSOLVENCY APPLICATION No. 102 OF 1934.

PURSUANT to a petition, dated 8th March 1934, filed by Abdul Rauf of 35, Elgin Road, Bhowanipore, and on the application of the debtor himself and on reading his application and hearing his pleader, it is ordered that the debtor be and the said debtor is hereby adjudged insolvent.

It is further ordered that the debtor do apply for his discharge within six months from this date.

Dated this 20th day of February 1935.

J. N. SEN, Sub-Judge.

(786—1)

NOTICE TO CREDITORS OF APPLICATION FOR DISCHARGE.

Section 41(*1*) of the Provincial Insolvency Act, V of 1920.

In the 4th Court of the Sub-Judge at Alipore.

INSOLVENCY CASE No. 70 OF 1934.

Ram Charan Dass Kurmi of Bijpore, Kanchrapara, 24-Parganas, applicant.

TAKE notice that the abovenamed insolvent has applied at the Court for his discharge, and that the Court has fixed the 8th day of April 1935 at 11 o'clock for hearing the application.

Dated this 22nd day of February 1935.

J. N. SEN, Sub-Judge.

(794—1)

NOTICE TO CREDITORS OF APPLICATION FOR DISCHARGE.

Section 41(*1*) of the Provincial Insolvency Act, V of 1920.

In the 4th Court of the Sub-Judge at Alipore.

INSOLVENCY CASE No. 79 OF 1934.

Satish Chanra Sur of Narikelbagan, Cossipore, 24-Parganas, applicant.

TAKE notice that the abovenamed insolvent has applied at the Court for his discharge and that the Court has fixed the 8th day of April 1935 at 11 o'clock for hearing the application.

Dated this 25th day of February 1935.

J. N. SEN, Sub-Judge.

(795—1)

NOTICE TO CREDITORS OF APPLICATION FOR DISCHARGE.

Section 41 (*1*) of the Provincial Insolvency Act, V of 1920.

In the 4th Court of the Sub-Judge at Alipore.

INSOLVENCY CASE No. 124 OF 1934.

Sanker Dosad of Saha Aman Lane, Kidderpore, 24-Parganas, applicant.

TAKE notice that the abovenamed insolvent has applied at the Court for his discharge, and that the Court has fixed the 8th day of April 1935 at 11 o'clock for hearing the application.

Dated this 25th day of February 1935.

J. N. SEN, Sub-Judge.

(797—1)

NOTICE TO CREDITORS OF APPLICATION FOR DISCHARGE.

Section 41 (*1*) of the Provincial Insolvency Act, V of 1920.

In the 4th Court of the Sub-Judge at Alipore.

INSOLVENCY CASE No. 136 OF 1934.

Pola Khan of Korim Khan's Stable, Chitpore, 24-Parganas, applicant.

TAKE notice that the abovenamed insolvent has applied at the Court for his discharge, and that the Court has fixed the 8th day of April 1935 at 11 o'clock for hearing the application.

Dated this 22nd day of February 1935.

J. N. SEN, Sub-Judge.

(798—1)

ORDER ANNULLING ADJUDICATION.

Section 43 of the Provincial Insolvency Act, V of 1920.

In the 4th Court of the Sub-Judge at Alipore.

INSOLVENCY APPLICATION No. 405 OF 1933.

Sm. Malina Bala Debi, applicant.

WHEREAS Sm. Malina Bala Debi of 22, Victoria Road, Baranagore, 24-Parganas, debtor, does neither appear nor apply for discharge within the specified time fixed, it is ordered that the order of adjudication, dated 17th February 1934, against the debtor be and the same is hereby annulled.

Dated this 20th day of February 1935.

J. N. SEN, Sub-Judge.

ORDER ANNULLING ADJUDICATION.

Section 43 of the Provincial Insolvency Act, V of 1920.

In the 4th Court of the Sub-Jude at Alipore.

INSOLVENCY APPLICATION No. 509 OF 1933.

Shamapada Ghosh, applicant.

WHEREAS Shamapada Ghosh of Chakla, police-station Bijpore, does neither appear nor apply for discharge within the specified time fixed, it is ordered that the order of adjudication, dated 6th March 1934, against the debtor be and the same is hereby annulled.

Dated this 7th day of March 1935.

J. N. SEN, Sub-Judge.

ORDER ANNULLING ADJUDICATION.

Section 43 of the Provincial Insolvency Act, V of 1920.

In the 4th Court of the Sub-Judge at Alipore.

INSOLVENCY APPLICATION No. 76 OF 1934.

Prafulla Kumar Mukherjee, applicant.

WHEREAS Prafulla Kumar Mukherjee of Kanchrapara, 24-Parganas, debtor, does neither appear nor apply for discharge within the specified time fixed, it is ordered that the order of adjudication, dated 17th August 1934, against the debtor be and the same is hereby annulled

Dated this 19th day of February 1935.

J. N. SEN, Sub-Judge.

ORDER ANNULLING ADJUDICATION.

Section 43 of the Provincial Insolvency Act, V of 1920.

In the 4th Court of the Sub-Judge at Alipore.

INSOLVENCY APPLICATION No. 132 OF 1934.

Shaik Gani, applicant.

WHEREAS Shaik Gani of 51-3, South Road, Entally, 24-Parganas, debtor, does neither appear nor apply for discharge within the specified time fixed, it is ordered that the order of adjudication, dated 17th August 1934, against the debtor be and the same is hereby annulled.

Dated this 19th day of February 1935.

J. N. SEN, Sub-Judge.

ORDER ANNULLING ADJUDICATION.

Section 43 of the Provincial Insolvency Act, V of 1920.

In the 4th Court of the Sub-Judge at Alipore.

INSOLVENCY APPLICATION No. 160 OF 1934.

Shaik Baser, applicant.

WHEREAS Shaik Baser of 19, Chetla Hat Road, Alipore, 24-Parganas, debtor, does neither appear nor apply for discharge within the specified time fixed, it is ordered that the order of adjudication, dated 17th August 1934, against the debtor be and the same is hereby annulled.

Dated this 19th day of February 1935.

J. N. SEN, Sub-Judge.

ORDER ANNULLING ADJUDICATION.

Section 43 of the Provincial Insolvency Act, V of 1920.

In the 4th Court of the Sub-Judge at Alipore.

INSOLVENCY APPLICATION No. 184 OF 1934.

Sitaram Halooai, applicant.

WHEREAS Sitaram Halooai of Ultadanga Main Road, 24-Parganas, debtor, does neither appear nor apply for discharge within the specified time fixed, it is ordered that the order of adjudication, dated 17th August 1934, against the debtor be and the same is hereby annulled.

Dated this 19th day of February 1935.

J. N. SEN, Sub-Judge.

ORDER ANNULLING ADJUDICATION.

Section 43 of the Provincial Insolvency Act, V of 1920.

In the 4th Court of the Sub-Judge at Alipore.

INSOLVENCY APPLICATION No. 191 OF 1934.

Sankar Parsi, applicant.

WHEREAS Sankar Parsi of Samnagar, 24-Parganas, debtor, does neither appear nor apply for discharge within the specified time fixed, it is ordered that the order of adjudication, dated 17th August 1934, against the debtor be and the same is hereby annulled.

Dated this 19th day of February 1935.

J. N. SEN, Sub-Judge.

MR. ABHAYA PADA CHAKRAVARTI, M.A., B.L., intends to be enrolled as an Advocate, High Court.

(507—4)

MR. JITENDRA NATH CHATTERJEE, M.A., B.L., intends to be enrolled as an Advocate of the High Court, Calcutta.

(538—4)

MR. PRABODH CHANDRA MAITRA, LL. B., intends to be enrolled as an Advocate, Calcutta High Court.

(562—4)

ASHRAFUDDIN CHAUDHURY, LL.B., intends to be enrolled as an Advocate of the High Court, Calcutta.

(571—4)

MR. DAYAMAY MUKHERJI, M.A., B.L., intends to be enrolled as an Advocate of the High Court, Calcutta.

(627—4)

RAI SOURINDRA NATH CHOWDHURY, B.L., intends to practise as an Advocate, Calcutta High Court.

(652—4)

MR. RADHAKANTA GUPTA, M.Sc., B.L., intends to be enrolled as an Advocate of Calcutta High Court.

(663—4)

MR. KRISHNA NATH BASU, B.L., intends to be enrolled as an Advocate of the Calcutta High Court.

(680—4)

MR. KULADHAR CHALIHA desires to be enrolled as an Advocate of the Calcutta High Court.

(654—4)

Public Service Commission (India).

APPLICATIONS are invited for the following three posts in the Indian Stores Department:—(1) Assistant Director, Industrial Intelligence and Research Bureau. Pay Rs. 740—35—950. Qualifications—A candidate should be a graduate in Mechanical Engineering of a recognised University or have passed, or obtained a diploma qualifying for exemption from, the Associate Membership Examination of the Institution of Civil Engineers, Institution of Mechanical Engineers or the Institution of Engineers (India). Must possess good administrative experience and wide knowledge of industrial and manufacturing practice. Age not more than 40 years, if not in permanent Government service. (2) Research Officer, Government Test House, Alipore. Pay Rs. 740—35—950. Qualifications—A candidate should be a graduate of a recognised University in pure or applied Physics. Should possess experience in research in subjects connected with industry. Must not be more than 40 years, if not in permanent Government service. (3) Assistant Research Officer, Government Test House, Alipore. Pay Rs. 350—25—550—30—700. Qualifications—A candidate should be a graduate of a recognised University in pure or applied Chemistry. Must possess experience in research work. Practical experience of industrial and manufacturing practice will be considered an additional qualification. Age not more than 35 years, if not in permanent Government service.

Posts temporary for three years in the first instance. Probation one year. Applicants not in Government service must be statutory natives of India. Government servants eligible, if permitted by their departments. Their pay will be governed by the appropriate rules and orders. The appointing authority intends to appoint to one of these three posts a member of a minority community (if possible, a Muslim) if such a person is on the list of candidates most suitable for appointment submitted by the Public Service Commission. Last date for receipt of applications 16th April 1935. Prescribed application forms and further particulars may be obtained from the Secretary, Public Service Commission, Delhi. Applicants for forms must mention the name of the post.

Delhi, the 14th March 1935. (838—1)

Public Service Commission (India).

APPLICATIONS are invited for the post of Physiological Chemist attached to the Imperial Institute of Agricultural Research at its sub-station at Bangalore. (Women not eligible.) 2. Government servants eligible if permitted to apply by their departments. 3. Candidates should (*a*) have a post-graduate degree in Chemistry or its equivalent; (*b*) have published original papers dealing with research of the Chemistry of animal nutrition; and (*c*) have had considerable experience (preferably not less than five years) of work at a laboratory dealing with the chemical problems of animal nutrition. 4. Pay (for persons other than members of the Indian Agricultural Service) Rs. 275—300 (probationary period)—325—25—650 (efficiency bar)—35—1,000 *plus* special pay of Rs. 150 per mensem. Initial pay according to age, qualifications and experience. If an officer already in permanent Government service is appointed, his pay will be fixed with due regard to the substantive pay which he is drawing, and if he is also a member of the Indian Agricultural Service he will be given an additional pay in the scale of Rs. 200—50—400. 5. Post permanent. Probation two years. 6. Last date for receipt of applications 16th April 1935. Prescribed application forms and further particulars may be obtained from the Secretary, Public Service Commission, Delhi. Applicants for forms must mention the name of the post.

Delhi, the 12th March 1935. (762—1)

WANTED an experienced and passed Accountant for the office of the District Engineer of Bakarganj on a monthly salary of Rs. 80—7—150—10—200. Candidates must possess the following minimum qualifications and the applications should be submitted in a registered cover so that they may reach the undersigned on or before the 31st March 1935:—

1. The candidate must be a passed 4th grade Accountant.

2. He should have at least five years' experience as Accountant of District Engineer's office in a first or second class district or any P. W. D. Executive Engineer's office.

In case of a fully qualified and experienced man a higher starting pay may be allowed.

None need apply who do not possess the above qualifications.

HAKIM ALI, District Engineer.

Barisal, the 14th March 1935. (802—1)

WANTED a Head Master for a Government High School in Bengal with effect from 1st April 1935 or as soon after that date as possible. The post is in the Bengal Educational Service, the pay of which is Rs. 150—25—200—50/2—300—40/2—500—50/2—700 with efficiency bars after 12th and 20th year of service and the person appointed will be on probation for two years.

2. Candidates for direct appointment should be British subjects and must not be over 45 years of age. They must possess a first class degree of M.A. or M.Sc. of an Indian University, or Honours degree (or corresponding qualification) of a European or American University. They must also possess a degree or diploma in teaching.

3. Candidates must produce evidence of an outstanding capacity for developing the corporate life of a school and power of maintaining discipline, of capacity for control, and of a satisfactory record of teaching experience.

4. Canvassing will be considered a disqualification.

5. Officers in the Subordinate Educational Service possessing the requisite qualifications may apply.

6. Each candidate for direct appointment must furnish two certificates written not more than one year prior to the date of application, from two responsible persons unconnected with his college or University and not related to him testifying to his private character.

7. Applications supported by documentary evidence of the qualifications possessed and of age should reach the Assistant Director of Public Instruction, Bengal, Writers Buildings, Calcutta, on or before the 1st May 1935.

WANTED a permanent unpassed Accounts Clerk in the grade of Rs. 40 – 4/2 – 68—3/2—80 for the office of the Executive Engineer, Suburban Division, Bengal. Preference will be given to a Muhammadan candidate who has had experience in the works of P. W. D. Divisional Accounts. The selected candidate will be on probation for six months.

Applications with testimonials should reach the undersigned not later than the 5th April 1935.

P. C. NEOGI, Executive Engineer,
Suburban Division.

Writers' Buildings, Calcutta, the 18th March 1935.

THE Bengal and Madras Service Family Pension Fund which is provisionally managed and assisted by Government has for its object the provision of monthly pensions for the maintenance of the widows and children of subscribers and is open, with certain exceptions, to all active and pensioned members of the Uncovenanted service of Government (except those serving under the Government of Bombay), and to Local Fund servants earning pensions from Government. Some of the special features of the fund are (1) that widowed daughters incapable of re-marriage or children labouring under such mental or bodily infirmities as incapacitate them from earning their livelihood or preclude the possibility of marriage (in case of a daughter) are admitted to its benefits; and (2) that subscribers to the Widows and Daughters' branches are entitled to a refund of 30 per cent. of the premia paid, should the nominee predecease them after five years of admission. The second quinquennial valuation of the Fund has been completed by the Actuary to the Government of India, and his report discloses very favourable results. For forms of application and rules of the Fund apply to the Accountant-General, Bengal, Imperial Secretariat Buildings, Calcutta.

Road Cess Notification.

THE district board of 24-Parganas at its special meeting held on 11th March 1935 declared under section 46 of the Bengal Local Self-Government Act, 1885, that the road cess be levied during the year 1935-36 at the maximum rate of six pies in the rupee on the annual value of all lands, etc.

J. C. SEN, Chairman, District Board.

Alipore, the 19th March 1935. (812—1)

Road Cess Notification.

THE district board of Rangpur at a special meeting held on the 9th March 1935, resolved to levy road cess in the district at the maximum rate of six pies in the rupee on the annual value of lands, etc., during the ensuing financial year 1935-36.

S. C. CHATTERJEE, Chairman, District Board.

Rangpur, the 19th March 1935. (831—2)

Erratum.

THE sale of tauzi No. 268 of the Murshidabad Collectorate in Certificate Case No. 14M of 1933-34 as published in the *Calcutta Gazette* of 14th, 21st and 28th February 1935 has been adjourned to 18th April 1935.

A. AHMED, Certificate Officer.

Malda, the 12th March 1935. (755—3)

NOTICE is hereby given that all exhibits filed in cases disposed of in this Court during the year 1932 will be destroyed if not taken back before 31st March 1935 by parties who filed them.

N. N. GUPTA, Municipal Magistrate, Calcutta.

Town Hall, Calcutta, the 9th January 1935.

NOTICE is hereby given that all exhibits filed in cases disposed of in this Court during the year 1932 will be destroyed if not taken back before 31st March 1935 by the parties who filed them.

A. MAJID, Municipal Magistrate, Calcutta.

Town Hall, Calcutta, the 9th January 1935.

IT is hereby notified for general information that the next ordinary examination of candidates for Certificates of Competency as Masters and Serangs of Inland Steam Vessels under Act I of 1917, will be held at the Port Office, Chittagong, on Tuesday, the 9th April, 14th May and 18th June 1935, at 10-30 a.m.

Applications for examination for any of the above grade certificates must be made at the Port Office, Chittagong, not later than three days prior to the date of examination, the candidates producing their certificates and testimonials and paying the fees.

F. W. ANGELL, Lieut.-Commdr., R. I. N.,
Nautical Surveyor, Chittagong.

Chittagong, the 13th March 1935.

Notice for sale.

THE undersigned offers for sale one elephant calf in the district of Chittagong Hill Tracts as per details given below :—

(1) Born on the 9th October 1934.
(2) Male calf.
(3) Without any defects.
(4) Beginning to eat fodder.
(5) Healthy.
(6) Name—Maini Prosad.

Prospecting purchasers may see the calf at Kaptai, district Chittagong Hill Tracts.

R. I. MACALPINE, Divisional Forest Officer,
Chittagong Hill Tracts.

P. O. Rangamati (Chittagong), the 21st March 1935.

Custom House Notice.

NOTICE is hereby given that whereas Messrs. J. F. Madan have failed to meet the demand made for duty on six packages of films marked Negatives India Films Returned *ex* ss. "Uhenfels", and bonded at Bengal Bonded Warehouse under warehousing bill of entry No. 91 of 18th February 1932, the said goods will be sold by auction on the 11th April 1935 at 12 noon in Mackenzie Lyall's sale room under the provisions of section 119 of the Sea Customs Act.

W. J. WARD, Collector of Customs.

Calcutta Custom House, the 19th March 1935.

(870—2)

Custom House Notice.

NOTICE is hereby given that whereas Messrs. J. F. Madan have failed to meet the demand made for duty on one package of films marked Nagative India Films Returned *ex* ss. "Rotenfels," and bonded at Bengal Bonded Warehouse under warehousing bill of entry No. 90 of 18th February 1932, the said goods will be sold by auction on the 11th April 1935 at noon in Mackenzie Lyall's sale room under the provisions of section 119 of the Sea Customs Act.

W. J. WARD, Collector of Customs.

Calcutta Custom House, the 19th March 1935. (871—4)

Estate Harry Dyche, deceased.

PURSUANT to section 360 of Act XXXIX of 1925 and section 42 of Act XXVIII of 1866, the creditors and all persons interested in the estate of Harry Dyche, formerly of 2, Camp Road, Jamalpur, but late of Merrivale, Ashburnham Road, Eastbourne, Sussex, England, retired Baptist Missionary, who died at Eastbourne, aforesaid, on the 8th day of January 1934, and Letters of Administration to whose estate were granted by the High Court, Calcutta, on the 1st day of March 1935, are hereby required to submit particulars of their claims to the undersigned on or before the 22nd day of April 1935, after which date the Administrator will distribute the assets, having regard only to the claims of which notice shall then have been received.

ORR, DIGNAM & CO.,
Solicitors to the Administrator.

32, Dalhousie Square, South, Calcutta, 13th March 1935.

(749—1)

Currency Note.

PORTION of the following Currency Note of the Calcutta Circle is stated to have been destroyed, and payment of its value has been claimed by the person whose name is placed against the number. Any other person claiming a right to it is warned to communicate at once with the undersigned :—

Register No.	Number of Note.	Value. Rs.	Name of claimant.
WD 12 of 34-35	RD/71, 53991	100	Bhola Nath Kasera, son of Suraj Prasad, Mohalla Harha, House No. C.K. 48/187, Benares City.

K. K. CHETTUR, Currency Officer.

Currency Office, Calcutta, the 4th March 1935.

Currency Note.

PORTION of the following Currency note of the Calcutta Circle is stated to have been destroyed, and payment of its value has been claimed by the person whose name is placed against the number. Any other person claiming a right to it is warned to communicate at once with the undersigned :—

Register No.	Number of Note.	Value. Rs.	Name of claimant.
WD 13 of 34-35	S/78, 670310	100	Ram Chand Sao, Ramji chak, p.o. Digha, district Patna.

K. K. CHETTUR, Currency Officer.

Currency Office, Calcutta, the 4th March 1935.

Lost, Stolen or Destroyed.

(As the case may be.)

THE Government Promissory Notes Nos. 254712, 254713 and 251467 of the 3½ per cent. loan of 1865 for Rs. 1,000, Rs. 1,000 and Rs. 100, respectively, originally standing in the name of the Bank of Bengal and last endorsed to Rakhal Das Bannerjee (since deceased), the proprietor, by whom they were never endorsed to any other person, having been lost, stolen or destroyed, notice is hereby given that payment of the above notes and the interest thereupon have been stopped at the Public Debt Office, Imperial Bank of India, Calcutta, and that application is about to be made for the issue of duplicates in favour of Sibatara Bannerji. The public are cautioned against purchasing or otherwise dealing with the above-mentioned securities.

Signature of the advertiser—Sibatara Bannerji.

Residence—1-1C, Puddapukur Square, Kidderpur, Calcutta. (672—3)

Lost, Stolen or Destroyed.

THE Government Promissory note No. 208566 of the 3½ per cent. loan of 1842-43 for Rs. 1,000, originally standing in the name of Alokashi Dasi, the proprietress, by whom it was never endorsed to any other person, having been lost, stolen or destroyed, notice is hereby given that the payment of the above note and the interest thereupon have been stopped at the Public Debt Office, Imperial Bank of India, Calcutta, and that application is about to be made for the issue of duplicate in favour of the proprietress. The public are cautioned against purchasing or otherwise dealing with the abovementioned security.

Signature of the advertiser—Alokashi Dasi.

Residence—C/o Bhobesh Chandra Ghosh of New Zealand Insurance Co., Ltd., 26, Dalhousie Square, West, Calcutta.

(687—3)

Destroyed.

THE Government Promissory Note No. 105642 of 3 per cent. loan of 1896-97 for Rs. 1,000, originally standing in the name of Kedar Nath Mukerjee, the proprietor, by whom it was never endorsed to any other person having been destroyed, notice is hereby given that payment of the above note and the interest thereupon have been stopped at the Public Debt Office, Imperial Bank of India, Calcutta, and that application is about to be made for the issue of a duplicate in favour of the proprietor. The public are cautioned against purchasing or otherwise dealing with the above-mentioned security.

Name of the advertiser—Probodh Chandra Ganguli, Pleador, Alipore, for Kedar Nath Mukerji of Ghatakpara, Ranaghat.

(452—3)

In the matter of the Indian Companies Act, 1913, VII of 1913, and

In the matter of Anglo-American Trading Co., Ltd.

(Section 206.)

NOTICE is hereby given that a special resolution for winding up the Company voluntarily has been passed and confirmed by Anglo-American Trading Co., Ltd., on 8th February 1935 and on 28th February 1935, respectively, and Mr. Chaudhary Mohd. Rafiq of Rahon has been appointed as the liquidator for the purpose of winding up the affairs of the Company.

K. D. CHAUDHARY, Managing Director.

(666—1)

In the matter of the Indian Companies Act, 1913, and

In the matter of Modern Commercial Insurance Company, Ltd.

NOTICE is hereby given that at an extraordinary general meeting held on 11th March 1935, the abovenamed Company has by an extraordinary resolution been put into voluntary liquidation and Sjt. Susil Chandra Das, C/o late Nabin Ch. Das, Lamapara, Comilla, has been appointed the liquidator.

SUSIL CHANDRA DAS, Liquidator.

Comilla, the 12th March 1935. (753—1)

In the matter of the Indian Companies Act, 1913, and

In the matter of Modern Commercial Insurance Company, Ltd.

NOTICE is hereby given that a meeting of the creditors of the abovenamed Company will be held on the 3rd April 1935, at 4-30 p.m., at the office of the Company, Comilla.

SUSIL CHANDRA DAS, Liquidator.

Comilla, the 12th March 1935. (754—1)

In the matter of the Indian Companies Act, VII of 1913, and
In the matter of Francis Harrison Hathaway & Co., Ld. (In liquidation).

NOTICE is hereby given that at the extraordinary general meetings of the members of the abovenamed Company duly convened and held at No. 30, Chowringhee, Calcutta, on Thursday, the 7th day of March 1935, and on Thursday, the 21st day of March 1935, respectively, the resolution below mentioned was passed and confirmed as a special resolution :—

" That it is desirable to wind up the Company and accordingly that the Company be wound up voluntarily and that Messrs. Edwin John Carter, James Orr and David Mitchell, of No. 4, Lyons Range, Calcutta, be and they are hereby appointed liquidators for the purposes of such winding up with joint and several powers at a remuneration to be agreed upon with the Directors."

DAVID MITCHELL, *for* Self and Co-liquidators.

4, Lyons Range, Calcutta, 6th Floor, 21st March 1935.
(824—1)

In the matter of the Indian Companies Act, VII of 1913, and
In the matter of Francis Harrison Hathaway & Co., Ld. (in liquidation).

NOTICE is hereby given, pursuant to section 209 of the Indian Companies Act, VII of 1913, that a meeting of the creditors of the abovenamed Company will be held at 4, Lyons Range, Calcutta, on Friday, the 12th day of April 1935, at 11 a.m.

DAVID MITCHELL, *for* Self and Co-liquidators.

4, Lyons Range, Calcutta, 6th Floor, 21st March 1935.
(825—1)

In the matter of the Indian Companies Act, 1913 (VII of 1913), and

In the matter of S. J. Mathews, Limited.

NOTICE is hereby given that, on the expiration of three months from date, the name of S. J. Mathews, Limited, will, unless cause is shown to the contrary, be struck off the register, and the Company will be dissolved.

N. K. MAJUMDER, Registrar of Companies under Act VII of 1913.

Calcutta, the 22nd March 1935.

In the matter of the Indian Companies Act, 1913 (VII of 1913), and

In the matter of Noble Insurance Company, Limited.

NOTICE is hereby given that, on the expiration of three months from date, the name of Noble Insurance Company, Limited, will, unless cause is shown to the contrary, be struck off the register, and the Company will be dissolved.

N. K. MAJUMDER, Registrar of Companies under Act VII of 1913.

Calcutta, the 22nd March 1935.

In the matter of the Indian Companies Act, 1913 (VII of 1913), and

In the matter of the Maison Alice, Limited.

NOTICE is hereby given that, on the expiration of three months from date, the name of the Maison Alice, Limited, will, unless cause is shown to the contrary, be struck off the register, and the Company will be dissolved.

N. K. MAJUMDER, Registrar of Companies under Act VII of 1913.

Calcutta, the 22nd March 1935.

In the matter of the Indian Companies Act, 1913 (VII of 1913), and

In the matter of Jamshedpur Transport Company, Limited.

NOTICE is hereby given that, on the expiration of three months from date, the name of Jamshedpur Transport Company, Limited, will, unless cause is shown to the contrary, be struck off the register, and the Company will be dissolved.

N. K. MAJUMDER, Registrar of Companies under Act VII of 1913.

Calcutta, the 22nd March 1935.

In the matter of the Indian Companies Act, 1913 (VII of 1913), and

In the matter of Tripura Company, Limited.

NOTICE is hereby given that the name of Tripura Company, Limited, has, this day in pursuance of section 247 of the Act, been struck off the register, and that the Company is dissolved.

N. K. MAJUMDER,
Registrar, Joint Stock Companies.

Calcutta, the 22nd March 1935.

Imperial Library.

(Secretariat Buildings, 6, Esplanade East, Calcutta.)
Open on—

Week days and Saturdays from 10 a.m. to 7 p.m. Sundays and Gazetted holidays from 2 p.m. to 5 p.m.

THE Imperial Library is also a Lending Library. It is free to all except children. There is no subscription to pay.

K. M. ASADULLAH, Librarian.

CINCHONA FACTORY PRODUCTS.

By order of the Government of Bengal Cinchona Factory Products as manufactured and packed at the Cinchona Factory, Mungpoo, Darjeeling district, will be sold and distributed by the Superintendent of the **Presidency Jail,** *in original packages* as received from the Mungpoo Factory, at the rates herein noted **from the 1st May 1926 :—**

Quinine Sulphate.

For 60 lbs. and upwards at a time .. Rs. 18 per lb.

For 6 lbs. and over but less than 60 lbs. at a time .. .. .. „ 19 „

For any quantity less than 6 lbs. .. „ 20 „

Totaquina.

Irrespective of quantity .. Rs. 13-8 per lb.

Quinine Hydrochloride.

For 60 lbs. and upwards at a time .. Rs. 23 per lb.

For 6 lbs. and over but less than 60 lbs. at a time .. .. .. „ 24 „

For any quantity less than 6 lbs. .. „ 25 „

Quinine Di-Hydrochloride.

For 60 lbs. and upwards at a time .. Rs. 25 per lb.

For 6 lbs. and over but less than 60 lbs. at a time .. .. .. „ 26 „

For any quantity less than 6 lbs. .. „ 27 „

Quinidine Sulphate.

For 60 lbs. and upwards at a time .. Rs. 20 per lb.

For 6 lbs. and over but less than 60 lbs. at a time .. .. .. „ 21 „

For any quantity less than 6 lbs. .. „ 22 „

Cinchonidine Sulphate.

For 60 lbs. and upwards at a time .. Rs. 25 per lb.

For 6 lbs. and over but less than 60 lbs. at a time .. .. .. „ 26 „

For any quantity less than 6 lbs. .. „ 27 „

Cinchonine Sulphate.

For 60 lbs. and upwards at a time .. Rs. 12 per lb.

For 6 lbs. and over but less than 60 lbs. at a time .. .. .. „ 13 „

For any quantity less than 6 lbs. .. „ 14 „

*Cinchona Febrifuge (Powder).

For 60 lbs. and upwards at a time .. Rs. 9 per lb.

For 6 lbs. and over but less than 60 lbs. at a time .. .. .. „ 9 „

For any quantity less than 6 lbs. .. „ 10 „

*Cinchona Febrifuge (Tablets).

For 60 lbs. and upwards at a time .. Rs. 10 per lb.

For 6 lbs. and over but less than 60 lbs. at a time .. .. .. „ 10 „

For any quantity less than 6 lbs. .. „ 11 „

Quinoidine (Tablets).

For 60 lbs. and upwards at a time .. Rs. 5 per lb.

For 6 lbs. and over but less than 60 lbs. at a time .. .. .. „ 5 „

For any quantity less than 6 lbs. .. „ 6 „

Quinoidine (in Mass).

For 60 lbs. and upwards at a time .. Rs. 4 per lb.

For 6 lbs. and over but less than 60 lbs. at a time .. .. .. „ 4 „

For any quantity less than 6 lbs. .. „ 5 „

Cinchona Bark (in 50 pound original bags).

Per bag .. .. .. Rs. 25.

Quinine Tablets

per box of 200 tablets each.

Rs. 2-8 (Bengal), Rs. 3 (outside Bengal)

Rs. 15-8-0 per lb.

Transit charges extra in every case.

Cinchona Febrifuge** is for sale to Government and Charitable Institutions, Local Bodies and Missionaries only. **It is not for sale to Private Firms or the General Public.

Quinine Sulphate is now open for sale to the Public at the above rates. But it will be supplied to Hospitals and Dispensaries of this Presidency only at the wholesale rate of Rs. 18 per pound irrespective of quantities.

Five and ten boxes of Quinine Tablets are sold to the public at the concession rates which will be intimated on application.

Provinces other than Bengal, Bihar and Orissa and Assam will get their supplies of Sulph. Quinine from the Director, Botanical Survey of India, Sibpur, Howrah.

Local sale at the jail gate from 10 to 12 noon.

The system of payment is by—*Cash in advance*—by "*Treasury Challans,*" which should accompany the order or indent.

In cases where this is not possible, payment should be made by "*Remittance Transfer Receipts*" or crossed "*Cheques.*"

Indents unaccompanied by cash in advance will be sent Value Payable Post. Credit sale is not allowed except under special circumstances.

In the case of *Government officers* payments will be recovered by *Book Transfer, i.e., Countersigned Invoices,* in the event of *Cash* not accompanying the indent by "*Treasury Challans,*" *Remittance Transfer Receipt or Cheque.*

2. Price and postage must accompany the price of the drug (when the drug is required by post).

The name of the Railway and Steamer Station or Post Office must be written distinctly when the parcels are required by Rail, Steamer or by Post. Railway parcels are sent by passenger train only.

A scale of postage is given below.

	1 oz.	2 ozs.	4 ozs.	½ lb.	¾ lb.	1 lb.
	As.	As.	As.	As.	As.	Rs. A.
Quinine Sulph. ..	..	..	7	7	11	0 11
Cinchona Feb. ..	..	..	7	7	11	0 11
Cinchona Feb. Tablets	..	..	7	7	11	0 11
Quinoidine Tablets ..	..	..	..	..	..	1 13
Quinine Hydrochlor. ..	5	5	7	7	..	0 11
Quinine Di-hydrochlor.	5	5	7	7	..	0 11
Quinine Tablets ..	..	..	7	7	11	0 11

	1½ lb.	2 lb.	3 lb.	4 lb.	5 lb.	6 lb.
	Rs. A.	Rs. A.	Rs. A.	Rs. A.	Rs. A.	Rs. A.
Quinine Sulph. ..	0 15	1 3	1 7	1 15	2 7	2 15
Cinchona Feb. ..	0 15	0 15	1 7	1 11	1 15	2 7
Cinchona Feb. Tablets	1 3	1 3	1 11	1 15	2 7	2 15
Quinoidine Tablets ..	..	2 3	3 3	..	..	..
Quinine Hydrochlor. ..	1 1	0 15	1 7	1 11	..	..
Quinine Di-hydrochlor.	1 1	0 15	1 13	2 5	..	..
Quinine Tablets ..	0 15	0 14	1 7	1 11	1 15	2 3

Two different drugs are not packed in the same parcel and postage must be paid separately for each kind.

N.B.—Postage stamps are not accepted as revenue.

Government reserve the right to alter the price without notice.

Registered No. C207

The Calcutta Gazette

THURSDAY, MARCH 28, 1935.

PART III

Acts of the Bengal Legislative Council.

GOVERNMENT OF BENGAL.

Legislative Department.

NOTIFICATION.

No. 286L.—19th March, 1935.—In pursuance of the provisions of sub-section (*3*) of section 81 of the Government of India Act, the following Act of the local legislature of Bengal, having been assented to by the Governor General on the 13th March, 1935, is hereby published for general information.

Bengal Act V of 1935.

THE BENGAL ALLUVIAL LANDS (AMENDMENT) ACT, 1934.

[Published in the *Calcutta Gazette* of the 28th March, 1935.]

An Act to amend the Bengal Alluvial Lands Act, 1920.

WHEREAS it is expedient to amend the Bengal Alluvial Lands Act, 1920, in the manner hereinafter appearing ; Ben. Act V of 1920.

AND WHEREAS the previous sanction of the Governor General has been obtained under sub-section (*3*) of section 80A of the Government of India Act to the passing of this Act ; 5 & 6 Geo. V. c. 61 ; 6 & 7 Geo. V. c. 37 ; 9 & 10 Geo. V. c. 101.

It is hereby enacted as follows :—

Short title.

1. This Act may be called the Bengal Alluvial Lands (Amendment) Act, 1934.

Amendment of section 3 of Bengal Act V of 1920.

2. In section 3 of the Bengal Alluvial Lands Act, 1920 (hereinafter referred to as the said Act),—

(*1*) after sub-section (*1*) the following sub-section shall be inserted, namely :—

" (*1a*) Where such land is situated within the limits of more than one district, or it is doubtful within the limits of which district or districts such land is situated any Collector who considers that any portion of such land is situated within the limits of his district may, after recording his reasons therefor, attach the whole of such land. If, after attachment, such land or any portion thereof is found to be situated within any other district or is transferred to another district, the attachment shall continue to be valid but the Collector who attached the land may either transfer the case, in respect of the whole or any portion of the attached land, for disposal to the Collector of any such other district or may himself continue the proceedings under the provisions of this Act. The Collector to whom a case is transferred for disposal under this sub-section shall be deemed, for the purposes of this Act, to have attached the land under this section." ;

(*2*) in sub-section (*2*),—

(*i*) after the word, figure and brackets " sub-section (*1*)," the words, figure, letter and brackets " or sub-section (*1a*) " shall be inserted,

(*ii*) in the proviso, for the words " for a period exceeding three years " the following words shall be substituted, namely :—

" for a period exceeding one year nor shall he charge any *salami* for such settlement or resettlement " ;

(*3*) (*i*) in sub-section (*3*), after the words, figure and brackets " under sub-section (*1*)," the words, figure, letter and brackets " or sub-section (*1a*) " shall be inserted,

The Bengal Alluvial Lands (Amendment) Act, 1934.

(*Section 3.*)

(*ii*) to the said sub-section the following words shall be added, namely :—

"The Collector may, if he thinks fit, cancel his order of attachment under sub-section (*1*) or sub-section (*1a*) in respect of a portion of the attached land and continue proceedings in respect of the remainder of such land." ;

(*4*) after sub-section (*3*) the following sub-sections shall be inserted, namely :—

"(*4*) When an order of attachment of any alluvial land is cancelled under sub-section (*3*), the Collector shall issue a notice in the prescribed manner inviting claims to the net receipts from the land during attachment, and shall order the payment of such receipts to the persons who, in his opinion, are entitled to the same. The net receipts shall be calculated by deducting from the gross receipts the costs incurred under this section, and under section 4, sub-section (*1*), and section 4A, sub-section (*1*), and the cost of preparation of the reference to be made under section 5, sub-section (*1*), if any.

(*5*) In estimating for the purposes of sub-section (*4*), section 5, and section 7 the costs incurred under this section, the following costs shall be included in the cost of management, namely :—

(*a*) the rate leviable under the Government Management of Private Estates Act, 1892, X of 1892.

(*b*) the cost of special staff, if any, and

(*c*) where no special staff is employed for collection, a sum not exceeding five *per centum per annum* on the actual collections."

Insertion of new section 4A.

3. After section 4 of the said Act the following section shall be inserted, namely :—

List of claimants.

"4A. (*1*) When the Collector has attached any alluvial land under section 3, he shall as soon as possible issue a notice in the prescribed manner calling upon all persons claiming title to any part of such land to file statements specifying their claims and the grounds thereof, and the name and jurisdiction number of the village and the *tauzi* number of the estate to which they allege that the land appertains.

If any of the aforesaid claimants is not a proprietor of such estate, he shall also mention in the statement the name of the landlord under whom he holds the land, the area and the rent of his tenancy and such other particulars as may be necessary to elucidate his claim.

If the land is included in a map as prepared or a record-of-rights as finally published under Chapter X of the Bengal Tenancy Act, 1885, the claimant shall also mention the particulars of the *khatians* and plot numbers necessary to identify the land in the map or record-of-rights. VIII of 1885.

(*2*) On receipt of a statement of claim referred to in sub-section (*1*) the Collector shall examine the claim and call for such further particulars, if any, as he considers necessary, and shall, if he is satisfied that the claim is *bona fide*, enter the name of the claimant in the list of claimants. The Collector may exclude from the said list the name of any claimant who fails to supply any of the required particulars. If any part of the attached land is claimed by Government, the Collector shall include Government in the said list of claimants.

The Bengal Alluvial Lands (Amendment) Act, 1934.

(*Section 4.*)

(*3*) An application for inclusion in the list of claimants by a person with whom any of the land has been settled or resettled during the period of attachment shall not be considered unless it alleges a title independent of such settlement or resettlement."

Amendment of section 5.

4. In section 5 of the said Act,—

(*1*) for the last portion of sub-section (*1*) beginning with the words " and shall state in such order " the following words shall be substituted, namely :—

" and shall include in the order the list of claimants referred to in section 4A and shall state—

(*a*) whether any land claimed by any such claimant has been identified as being included in the land which is the subject of the reference,

(*b*) the costs incurred under section 3, section 4, sub-section (*1*), section 4A, sub-section (*1*), and the cost of preparation of the reference made under this sub-section,

(*c*) the value of the land, and

(*d*) the names of any persons who have filed statements of claim under section 4A and whose names are not included in the list of claimants.";

(*2*) to sub-section (*1*) the following paragraph shall be added, namely :—

" In the case of any land referred to in section 3, sub-section (*1a*), the reference shall be made to the principal Civil Court of original jurisdiction in the district in which, in the opinion of the Collector, the major portion of the attached land is situated.";

(*3*) after sub-section (*1*) the following sub-section shall be inserted, namely :—

"(*1a*) In making such reference the Collector shall advance the court-fees payable under the Court-fees Act, 1870, on a plaint in a suit for determination of title to land and such process-fees as may be required for service of notices on the parties to the reference. The Collector may make such advance from the balance of the receipts at credit in his accounts of the attached land, or, if this is not practicable, may at any time recover such advance or any part thereof from such balance.";

VII of 1870.

(*4*) in the second paragraph of sub-section (*2*),—

(*i*) for the words " to all the claimants mentioned in the said reference and shall also issue general notices calling upon all other persons claiming interest in the land " the words "to all the persons mentioned in the list of claimants referred to in section 4A" shall be substituted,

(*ii*) after the words "respective claims" the following words shall be inserted, namely:—

"No other person shall be made a party to the reference unless the said Court is satisfied that for some reason not due to wilful

The Bengal Alluvial Lands (Amendment) Act, 1934.

(*Section 5.*)

default or negligence on the part of such person he was unable to file a statement of claim referred to in section 4A, sub-section (*1*) in due time or that the Collector has without sufficient reason held that such person's claim was not *bona fide*. A person pleading ignorance of the issue of the notice under that sub-section shall not be made a party to the reference unless he proves to the satisfaction of the said Court that he had no knowledge that the land had been attached.";

(*5*) for sub-section (*4*) the following sub-sections shall be substituted, namely :—

"(*4*) The said Court shall decide to whom and in what proportions the net receipts, if any, from the land during attachment shall be paid. The net receipts shall be calculated by deducting from the gross receipts the costs incurred under section 3, section 4, sub-section (*1*), section 4A, sub-section (*1*), and the costs incurred by the Collector in the proceedings under this section including the cost of preparation of the reference made under sub-section (*1*).

(*5*) The said Court shall also decide by whom and in what proportions the costs incurred under section 3, section 4, sub-section (*1*), section 4A, sub-section (*1*), and the costs incurred by the Collector and by the other parties in the proceedings under this section including the cost of preparation of the reference made under sub-section (*1*), are payable.

(*6*) If the costs referred to in sub-section (*4*) exceed the gross receipts the Court shall decide by whom and in what proportions the amount of such excess shall be payable, and such amount shall be recoverable by the Collector, in accordance with the decision of the Court, from the persons liable, as arrears of a public demand.

(*7*) The person entitled to the net receipts may apply to the Court for the recovery from the persons liable of any amount deducted from the gross receipts in excess of the amount, so deducted, for which he is himself liable. If Government are entitled to the net receipts or to any part thereof the Collector may recover as arrears of a public demand any amount due to Government or may apply to the Court for the recovery of the same.

(*8*) A reference made under sub-section (*1*) shall not be dismissed for default but the said Court shall decide the same after taking the evidence of such of the claimants mentioned by the Collector in the order of reference or added by the Court under section 5, sub-section (*2*), as it may think necessary."

Amendment of section 7.

5. In section 7 of the said Act, for the words, figures and brackets "costs incurred under section 3 and section 4, sub-section (*1*), if any," the words, figures, letter and brackets "costs incurred under section 3, section 4, sub-section (*1*), section 4A, sub-section (*1*) and the cost of preparation of the reference to be made under section 5, sub-section (*1*), if any," shall be substituted.

The Bengal Alluvial Lands (Amendment) Act, 1934.

(Section 6.)

Amendment of section 8.

6. In section 8 of the said Act,—

(*1*) after clause (*3*) the following clauses shall be inserted, namely :—

"(*3a*) to regulate the procedure to be followed by the Collector in distributing the net receipts from attached land, when the attachment is cancelled under section 3, sub-section (*3*), and when the Civil Court passes a decree under section 5 ;

(*3b*) to regulate the issue of notices prescribed under section 3, sub-section (*4*), or under section 4A, sub-section (*1*) ;"

(*2*) clause (*5*) shall be omitted ;

(*3*) in clause (*6*), the word "and" at the end of this clause shall be omitted ;

(*4*) after clause (*6*) the following clause shall be inserted, namely :—

"(*6a*) to provide for the creation of an Alluvial Lands Dispute Fund in any district and the administration of the same ; and".

A. DEC. WILLIAMS,

Secy. to the Govt. of Bengal.

Registered No. C207

The Calcutta Gazette

THURSDAY, MARCH 28, 1935.

PART IV

Bills introduced in the Bengal Legislative Council, Reports of Select Committees presented or to be presented to that Council, and Bills published before introduction in that Council.

BENGAL LEGISLATIVE COUNCIL DEPARTMENT.

NOTIFICATION.

No. 1459L.C. — 21st March, 1935.—The following report of the Select Committee on the Estates Partition (Second Amendment) Bill, 1935, by Rai Bahadur Keshab Chandra Banerjee, M.L.C., with the Bill embodying amendments recommended by the Committee, is hereby published for general information.

Report of the Select Committee on the Estates Partition (Second Amendment) Bill, 1935, by Rai Bahadur Keshab Chandra Banerji, M.L.C.

We, the members of the Select Committee of the Bengal Legislative Council to which the Estates Partition (Amendment) Bill, 1934, by Rai Bahadur Keshab Chandra Banerji, M.L.C., was referred by a motion carried in the Bengal Legislative Council on the 28th February, 1935, have the honour to submit this our report with the Bill embodying amendments recommended by us annexed. All matter omitted by the Select Committee has been printed in italics and enclosed in square brackets and all new matter inserted has been underlined.

2. The Bill was published in English in the *Calcutta Gazette* of the 14th March, 1935.

3. The Committee met for the first time on the 7th March, 1935, and concluded its sitting on that day.

4. We do not consider that the Bill has been so altered as to require republication.

5. The changes made in the Bill are as follows :—

Long title.—We have made a change in the long title which has been necessitated by the passing of a previous Bill this session amending the Estates Partition Act, 1897.

Clause 1.—We have for the same reason made a similar change in the short title, and have also altered the year from "1934" to "1935."

Clause 2.—We have omitted this clause and have reproduced its provisions in proposed sub-section (*6*)—*vide* clause 3(*2*).

Clause 3.—We have omitted this clause and have reproduced its provisions in the proposed first proviso to sub-section (*3*)—*vide* clause 3(*1*). This fits in more conveniently with the framework of the existing Act and makes the intention clearer.

We recommend that the Bill, as reported on by us, be passed.

B. L MITTER.
Chairman.

KESHAB CHANDRA BANERJI.

O. M. MARTIN.

BHUPENDRA NARAYAN SINHA.

SARAT KUMAR ROY.

SRIS CHANDRA NANDY.

W H. THOMPSON.

A. R. E. LOCKHART.

K. M. AFZAL.

KISHORI MOHAN CHAUDHURI.

ALIMUZZAMAN CHAUDHURI.

THE ESTATES PARTITION (SECOND AMENDMENT) BILL, [1934] 1935.

(Embodying amendments recommended by the Select Committee.)

[NOTE.—All matter omitted by the Select Committee has been printed in italics and enclosed in square brackets and all new matter inserted has been underlined.]

A

BILL

further to amend the Estates Partition Act, 1897.

WHEREAS it is expedient further to amend the Estates Partition Act, 1897, in the manner hereinafter appearing ; Ben. Act V of 1897.

AND WHEREAS the previous sanction of the Governor General has been obtained under sub-section (*3*) of section 80A of the Government of India Act to the passing of this Act ; 5 & 6 Geo. V., C. 61; 6 & 7 Geo. V., C. 37 ; 9 & 10 Geo. V., C. 101.

It is hereby enacted as follows :—

Short title. **1.** This Act may be called the Estates Partition (Second Amendment) Act, [*1934*] 1935.

[*Commencement of the Act.*] [**2.** *This Act shall come into force at once ; and it shall apply not only to partition proceedings which may be instituted hereafter, but also to such proceedings commenced before the passing of this Act but not finally disposed of.*]

[*Amendment of section 5 of Bengal Act V of 1897.*] [**3.** *In section 5 of the Estates Partition Act, 1897, after sub-section (5), the following sub-section shall be inserted, namely :—*

"*(6) Notwithstanding anything contained in sub-section (3) of section 5, if the interest of such recorded proprietor consists of an undivided share held in common tenancy in specific mauzas or tracts forming part of the parent estate but not extending over the whole area of the parent estate, the Collector, may, if he thinks it equitable and convenient, assign to him as his separate estate lands, either from such specific mouzas or tracts, or from other mouzas or tracts or partly from such mouzas or tracts and partly from other mouzas or tracts of the parent estate, the assets of which shall bear the same proportion to the assets of such specific mouzas or tracts as his undivided share in such specific mouzas or tracts bears to the entire mouzas or tracts.*"]

Amendment of section 5 of Bengal Act V of 1897. **3.** In section 5 of the Estates Partition Act, 1897—

(*1*) for the proviso to sub-section (*3*) the following proviso shall be substituted, namely :—

" Provided that—

(*a*) the Collector may, if he thinks it equitable and convenient, assign to such recorded proprietor as his separate estate, land situated wholly or in part in other *mauzas* or tracts;

The Estates Partition (Second Amendment) Bill, 1935.

[Clause 3.]

(*b*) if the interest of such recorded proprietor consists of such an undivided share in more than one *mauza* or tract, he shall not be entitled to have land assigned to him in every such *mauza* or tract, but the Collector may assign to him as his separate estate land situated in one or more of the said *mauzas* or tracts

Subject to the condition that the assets of land assigned under clause (*a*) or clause (*b*) are in proportion to the aggregate of the interests which such recorded proprietor holds in all such *mauzas* or tracts."

(*2*) after sub-section (*5*) the following sub-section shall be added, namely :—

"(*6*) Clause (*a*) of the proviso to sub-section (*3*) shall be applicable to all proceedings pending before the Collector for the partition of an estate at the date of the commencement of the Estates Partition (Second Amendment) Act, 1935."

J. W. McKAY,

Secy. to the Bengal Legis. Council

Registered No. C207

The Calcutta Gazette

THURSDAY, MARCH 28, 1935.

PART V

Acts of the Indian Legislature assented to by the Governor-General and Ordinances promulgated under section 72 of the Government of India Act.

GOVERNMENT OF INDIA.

Legislative Department.

The following Act of the Indian Legislature received the assent of the Governor General on the 26th February, 1935, and is hereby promulgated for general information :—

ACT No. I OF 1935.

An Act to amend the Indian Naturalization Act, 1926, for certain purposes.

WHEREAS it is expedient to amend the Indian Naturalization Act, 1926, for the purposes hereinafter appearing; It is hereby enacted as follows :— VII of 1926.

Short title and commencement.

1. (*1*) This Act may be called the Indian Naturalization (Amendment) Act, 1935.

(*2*) It shall come into force on such date as the Governor General in Council may, by notification in the Gazette of India, appoint.

Amendment of section 7, Act VII of 1926.

2. In sub-section (*1*) of section 7 of the Indian Naturalization Act, 1926 (hereinafter referred to as the said Act), the words " the wife of any such person " shall be omitted and to the said sub-section the following words shall be added, namely :— VII of 1926.

" and the wife of any such person to whom a certificate of naturalization is granted after the commencement of the Indian Naturalization (Amendment) Act, 1935, shall, if not already a British subject, in like manner be so deemed and be so entitled and so subject, if within one year, or such longer period as the Local Government may in special circumstances allow, from the date of the taking and subscribing of such oath by her husband, she makes to the Local Government a declaration that she desires to be deemed to be a British subject ".

Amendment of section 9, Act VII of 1926.

3. In sub-section (*2*) of section 9 of the said Act,—

(*a*) before the proviso the following proviso shall be inserted, namely :—

" Provided that no such order shall be made in the case of a wife unless by reason of the acquisition by her husband of a new nationality she has also acquired that nationality :"; and

(*b*) in the existing proviso, after the word "provided" the word "further" shall be inserted.

Amendment of section 10, Act VII of 1926.

4. To sub-section (*2*) of section 10 of the said Act the following proviso shall be added, namely :—

" Provided that the wife of any such person shall not cease to be deemed to be a British subject under this sub-section, unless by reason of the acquisition by her husband of a new nationality she has also acquired that nationality. "

L. GRAHAM,

Secy. to the Govt. of India.

Registered No. C207

The Calcutta Gazette

THURSDAY, MARCH 28, 1935.

PART VI

Bills introduced in the Council of State and Legislative Assembly, Reports of Select Committees presented to the Council and Assembly, and Bills published under Rule 18 of the Indian Legislative Rules

GOVERNMENT OF INDIA.

Legislative Assembly Department.

The following Bill was introduced in the Legislative Assembly on the 27th February, 1935 :—

L. A. BILL No. 13 OF 1935.

A Bill further to amend the Indian Income-tax Act, 1922.

WHEREAS it is expedient further to amend the Indian Income-tax Act, 1922 ; It is hereby enacted as follows :— XI of 1922.

Short title, extent and commencement.

1. (*1*) This Act may be called the Indian Income-tax (Amendment) Act, 193 .

(*2*) It extends to the whole of British India, including British Baluchistan and the Sonthal Parganas, and applies also, within the dominions of Princes and Chiefs in India in alliance with His Majesty, to British subjects in those dominions who are in the service of the Government of India or of a local authority established in the exercise of the powers of the Governor General in Council in that behalf, and to all other servants of His Majesty in those dominions.

(*3*) It shall come into force at once.

Amendment of section 5, Act XI of 1922.

2. In section 5 of the Indian Income-tax Act, 1922 (here-in-after referred to as the said Act), the following sub-sections shall be inserted, namely :— XI of 1922.

"(7) There shall be constituted for each district or division or a specified area as the case may be a tribunal to control the assessment of income-tax, to hear all appeals against such assessment, and generally to execute the Act. *Cf.* S. 64, Eng. Income-tax Act, 1918.

(*8*) Such tribunal shall comprise a judicial officer not below the rank of District Judge, a member of the legal profession of not less than ten years' standing appointed on the nomination of the District Bar Association, and where a High Court exists upon the nomination of the High Court Bar Association and a member of the District Council or Municipal Committee appointed at a joint meeting of those bodies.

(9) Such tribunal shall decide all questions by a majority provided that it shall be competent to the tribunal or the majority of its members of refer any question for decision of the High Court.

(*10*) For the purpose of deciding any question referred to it for decision it shall be competent to co-opt any person specially conversant with the subject. Upon such co-option the person so co-opted shall become a member of the Court for the purpose of deciding the question referred to it of which it may take upon itself to decide."

Cf. SS. 147, 195, Eng. Income-tax Act, 1918.

Amendment of section 23, Act XI of 1922.

3. In section 23 of the said Act,—

(*i*) in sub-section (*1*), after the words "If the Income-tax Officer" the words "with the concurrence of three or more assessors" shall be inserted ;

(*ii*) in sub-section (*2*), after the words "If the Income-tax Officer" the words "with the concurrence of three or more assessors" shall be inserted ; and

(*iii*) in sub-section (*3*), after the words "Income-tax Officer", where they first occur, the words "in the presence of three or more assessors if the assessee so desires" shall be inserted.

Amendment of section 30, Act XI of 1922.

4. In section 30 of the said Act, for the words "Assistant Commissioner", wherever they occur, the words "Income-tax Tribunal" shall be substituted.

Amendment of section 31, Act XI of 1922.

5. In section 31 of the said Act, for the words "Assistant Commissioner", wherever they occur, the words "Income-tax Tribunal" shall be substituted.

Amendment of section 32, Act XI of 1922.

6. In section 32 of the said Act,—

(*1*) in sub-section (*1*),—

(*a*) for the words "an Assistant Commissioner" the words "the Income-tax Tribunal" shall be substituted ; and

(*b*) for the word "Commissioner" the words "High Court" shall be substituted ;

(*2*) in sub-section (*3*), for the word "Commissioner" the words "High Court" shall be substituted.

Amendment of section 33, Act XI of 1922.

7. In section 33 of the said Act, for the word "Commissioner", wherever it occurs, the words "High Court" shall be substituted.

Amendment of section 37, Act XI of 1922.

8. In section 37 of the said Act, for the words "Assistant Commissioner and Commissioner" the words "Income-tax Tribunal both General and Special and the High Court" shall be substituted.

Amendment of section 66, Act XI of 1922.

9. In sub-section (*2*) of section 66 of the said Act, for the words "one hundred rupees" the words "fifteen rupees" shall be substituted.

Cf. Ib. S. 149.

STATEMENT OF OBJECTS AND REASONS.

1. The Income-tax Act was for the first time enacted in 1886, when it was said that a sum of about a crore of rupees was required owing to the deficit Budget created by the unusual outlay on the Burmese War and the sudden depreciation of silver. The tax was intended to be a temporary one. But it has since remained and now realizes over twenty times that amount. Similarly, the super-tax levied as a war measure has been made permanent. But the procedure for the levy of both is antiquated and summary and places an undue power in the hands of the assessing authorities who have been given the final right of hearing the so-called appeal of the assessee.

2. Income and super-tax is more appropriate to creditor countries and to those in which commercial and industrial enterprise has led to the accumulation of capital from which the State may justly claim a share. But in a country primarily agricultural in which capital is naturally shy, and commercial and industrial enterprise comparatively recent and in a state of infancy, the State should be loth to tax at least over-tax the circulation of capital, but this is now possibly a counsel of perfection.

3. The intention of this Bill is, therefore, merely to remove the most glaring of defects in the method of assessment and its control leaving a future reformed rectifying the obvious wrong of a double super-tax and other anomalies from which the payers of income-tax suffer.

4. For the present it is intended to bring the assessors under some popular and judicial control and partially redress the just major grievances of the assessees.

It is hoped that the Bill will receive general support and in some measure ameliorate the harshness and rigour of a taxing measure whose unpopularity has been pronouncedly increased by the mode and manner of its administration.

FAKIR CHAND.

NOTES ON CLAUSES.

Clause 2.—In England the collecting agency is an independent body of patriotic citizens who levy the tax and hear appeals from the assessor's valuation and are generally entrusted with the administration of the Act : the result being that the tax, odious though it is, does not gain in its odiousness by its administration by the very persons interested in its collection.

(2) Under S. 57 of the English Tax Act, 1918, now in force, the income-tax is levied by the commissioners of Inland Revenue whose number ordinarily varies from 3 to 7 (S. 59) but which may be increased to 14 (*Ib.* S. 59). They are appointed for specified cities or divisions and possess the sole power to assess, collect and levy the income-tax (*Ib.* S. 64) and hear appeals against assessment (*Ib.* S. 133). Such commissioners are generally drawn from well-to-do classes. For special cases special commissioners are appointed and they possess the same right as general commissioners (*Ib.* S. 67).

The general commissioners appoint assessors for one year (*Ib.* S. 76), and the collector of taxes (*Ib.* S. 80).

(3) If the English procedure were followed, the whole Act would have to be recast. It is not the intention of the present Act to do more than introduce an element of impartibility in the assessment of income-tax by providing that the assessor shall act with the concurrence of three or more assessors and that all appeals against his assessment shall lie to a Court unconnected with the assessing department. This is the barest justice to the assessee who is entitled to much more and not anything else.

(4) The English law allows three appeals against an assessment—*first* to the special commissioners, *secondly* to the Recorder or *County Court* Judge and *thirdly* to the High Court (SS. 147—149). Under the Bill, if passed, provision is made only for a single appeal, but the High Court has been given the general power of revision which it possesses in all civil and criminal cases. In England the appeals lie to special commissioners. The Bill embodies the general spirit of the English Act, though it does not adopt its machiney.

MD. RAFI,

Secy. to the Govt. of India.

GOVERNMENT OF INDIA.

Legislative Assembly Department.

The following Bill* was introduced in the Legislative Assembly on the 28th February, 1935 :—

L. A. BILL No. 19 OF 1935.

A Bill to fix the duty on salt manufactured in, or imported by land into, certain parts of British India, to vary certain duties leviable under the Indian Tariff Act, 1934, to fix maximum rates of postage under the Indian Post Office Act, 1898, to fix rates of income-tax and super-tax, and to vary the excise duty on silver leviable under the Silver (Excise Duty) Act, 1930.

WHEREAS it is expedient to fix the duty on salt manufactured in, or imported by land into, certain parts of British India, to vary certain duties leviable under the Indian Tariff Act, 1934, to fix maximum rates of postage under the Indian Post Office Act, 1898, to fix rates of income-tax and super-tax, and to vary the excise duty on silver leviable under the Silver (Excise Duty) Act, 1930; It is hereby enacted as follows :— XXXII of 1934. VI of 1898. XVIII of 1930.

Short title and extent.

1. (*1*) This Act may be called the Indian Finance Act, 1935.

(*2*) It extends to the whole of British India, including British Baluchistan and the Sonthal Parganas.

Fixation of salt duty.

2. The provisions of section 7 of the Indian Salt Act, 1882, shall, in so far as they enable the Governor General in Council to impose by rule made under that section a duty on salt manufactured in, or imported into, any part of British India other than Burma or Aden, be construed as if, for the year beginning on the 1st day of April, 1935, they imposed such duty at the rate of one rupee and four annas per maund of eighty-two and two-sevenths pounds avoirdupois of salt manufactured in, or imported by land into, any such part, and such duty shall, for all the purposes of the said Act, be deemed to have been imposed by rule made under that section. XII of 1882.

Amendments of the First and Second Schedules to Act XXXII of 1934.

3. (*1*) In the First Schedule to the Indian Tariff Act, 1934,— XXXII of 1934.

in Items Nos. 61(*2*) and 62 (*1*) for the words "Five annas per ounce" in the fourth column the words "Two annas per ounce" shall be substituted.

(*2*) In the Second Schedule to the Indian Tariff Act, 1934, the heading "SKINS" together with Item No. 3 under that heading shall be omitted. XXXII of 1934.

Inland postage rates.

4. For the year beginning on the 1st day of April, 1935, the Schedule contained in the First Schedule to this Act shall be inserted in the Indian Post Office Act, 1898, as the First Schedule to that Act. VI of 1898.

Income-tax and super-tax.

5. (*1*) Income-tax for the year beginning on the 1st day of April 1935, shall be charged at the rates specified in Part I of the Second Schedule, increased in each case, except in the case of total incomes of less than two thousand rupees falling under heading A in the said Part, by one-sixth of the amount of the rate.

* The Governor General has been pleased to accord the sanction required by section 67 (*2*) of the Government of India Act.

(2) The rates of super-tax for the year beginning on the 1st day of April, 1935, shall, for the purposes of section 55 of the Indian Income-tax Act, 1922, be those specified in Part II of the Second Schedule, increased in each case by one-sixth of the amount of the rate. XI of 1922.

(3) For the purposes of the Second Schedule "total income" means total income as determined for the purposes of income-tax or super-tax, as the case may be, in accordance with the provisions of the Indian Income-tax Act, 1922. XI of 1922.

(4) For the purpose of assessing and collecting income-tax on total incomes of less than two thousand rupees the Indian Income-tax Act, 1922, shall be deemed to be subject to the adaptations set out in Part III of the Second Schedule. XI of 1922.

(5) For the purpose of any assessment to be made for the year ending 31st March, 1936, the rate of income-tax applicable to such part of the total income of any person as is derived from salaries or from interest on securities paid in the year ending 31st March, 1935, shall be the previous year's rate, and for the purposes of refunds under sub-section (1) or sub-section (3) of Section 48 in respect of dividends declared in the year ending 31st March, 1935, or of payments made in the said year of salaries or of interest on securities, the rate applicable to the total income of the person claiming refund shall be the previous year's rate.

Explanation.—In this sub-section the turm "previous year's rate" with reference to any person means the rate of income-tax which would have been applicable to his total income if he had been assessed for the year ending 31st March, 1935, on a total income equal to that on which he is assessable for the year ending 31st March, 1936.

Excise duty on silver.

6. In sub-section (1) of section 3 of the Silver (Excise Duty) Act, 1930, for the words "five annas" the words "two annas" shall be substituted. XVIII of 1930.

SCHEDULE I.

Schedule to be inserted in the Indian Post Office Act, 1898.

[*See section 4.*]

" THE FIRST SCHEDULE.

INLAND POSTAGE RATES.

[*See section 7.*]

Letters.

For a weight not exceeding half a tola	One anna.
For a weight exceeding half a tola but not exceeding two and a half tolas ..	One anna and three pies.
For every two and a half tolas, or fraction thereof, exceeding two and a half tolas	One anna and three pies.

Postcards.

Single	Nine pies.
Reply	One and a half annas.

Book, Pattern and Sample Packets.

For the first five tolas or fraction thereof	Nine pies.
For every additional five tolas or fraction thereof in excess of five tolas ..	Six pies.

Registered Newspapers.

For a weight not exceeding eight tolas	Quarter of an anna.
For a weight exceeding eight tolas and not exceeding twenty tolas	Half an anna.
For every twenty tolas, or fraction thereof, exceeding twenty tolas ..	Half an anna.

Parcels.

For a weight not exceeding twenty tolas	Two annas.
For a weight exceeding twenty tolas and not exceeding forty tolas	Four annas.
For every forty tolas, or fraction thereof, exceeding forty tolas	Four annas."

SCHEDULE II.

[*See section 5.*]

PART I.

Rates of Income-tax.

A. In the case of every individual, Hindu undivided family, unregistered firm and other association of individuals not being a registered firm or a company—	Rate.
(1) When the total income is Rs. 1,000 or upwards, but is less than Rs. 1,500.	One and one-third pies in the rupee.
(2) When the total income is Rs. 1,500 or upwards, but is less than Rs. 2,000	Two and two-thirds pies in the rupee.
(3) When the total income is Rs. 2,000 or upwards, but is less than Rs. 5,000	Six pies in the rupee.
(4) When the total income is Rs. 5,000 or upwards, but is less than Rs. 10,000	Nine pies in the rupee.
(5) When the total income is Rs. 10,000 or upwards, but is less than Rs. 15,000.	One anna in the rupee.
(6) When the total income is Rs. 15,000 or upwards, but is less than Rs. 20,000.	One anna and four pies in the rupee.
(7) When the total income is Rs. 20,000 or upwards, but is less than Rs. 30,000.	One anna and seven pies in the rupee.
(8) When the total income is Rs. 30,000 or upwards, but is less than Rs. 40,000.	One anna and eleven pies in the rupee.
(9) When the total income is Rs. 40,000 or upwards, but is less than Rs. 1,00,000.	Two annas and one pie in the rupee.
(10) When the total income is Rs. 1,00,000 or upwards	Two annas and two pies in the rupee.
B. In the case of every company and registered firm, whatever its total income	Two annas and two pies in the rupee.

PART II.

Rates of Super-tax.

In respect of the excess over thirty thousand rupees of total income—	Rate.
(1) In the case of every company—	
(*a*) in respect of the first twenty thousand rupees of such excess ..	*Nil.*
(*b*) for every rupee of the remainder of such excess	One anna in the rupee.
(2) (*a*) in the case of every Hindu undivided family—	
(*i*) in respect of the first forty-five thousand rupees of such excess ..	*Nil.*
(*ii*) for every rupee of the next twenty-five thousand rupees of such excess.	One anna and three pies in the rupee.

	Rate.
(*b*) in the case of every individual, unregistered firm and other association of individuals not being a registered firm or a company—	
(*i*) for every rupee of the first twenty thousand rupees of such excess	Nine pies in the rupee.
(*ii*) for every rupee of the next fifty thousand rupees of such excess ..	One anna and three pies in the rupee.
(*c*) in the case of every individual, Hindu undivided family, unregistered firm and other association of individuals not being a registered firm or a company—	
(*i*) for every rupee of the next fifty thousand rupees of such excess ..	One anna and nine pies in the rupee.
(*ii*) for every rupee of the next fifty thousand rupees of such excess ..	Two annas and three pies in the rupee.
(*iii*) for every rupee of the next fifty thousand rupees of such excess ..	Two annas and nine pies in the rupee.
(*iv*) for every rupee of the next fifty thousand rupees of such excess ..	Three annas and three pies in the rupee.
(*v*) for every rupee of the next fifty thousand rupees of such excess ..	Three annas and nine pies in the rupee.
(*vi*) for every rupee of the next fifty thousand rupees of such excess ..	Four annas and three pies in the rupee.
(*vii*) for every rupee of the next fifty thousand rupees of such excess ..	Four annas and nine pies in the rupee.
(*viii*) for every rupee of the next fifty thousand rupees of such excess ..	Five annas and three pies in the rupee.
(*ix*) for every rupee of the next fifty thousand rupees of such excess ..	Five annas and nine pies in the rupee.
(*x*) for every rupee of the remainder of such excess	Six annas and three pies in the rupee.

PART III.

Adaptations of the Indian Income-tax Act, 1922, to provide for the summary assessments of income-tax on total incomes of less than Rs. 2,000.

1. The Income-tax Officer may, save where he has served a notice under sub-section (*2*) of section 22 of the Indian Income-tax Act, 1922, make a summary assessment of the income of an assessee to the best of his judgment, and shall serve on the assessee a notice of demand in a form to be prescribed by the Central Board of Revenue ; and such notice shall be deemed to be a notice of demand under section 29 of that Act.

2. Any assessee in respect of whom such summary assessment has been made, may within thirty days of receipt of the notice of demand, make an application to the Income-tax Officer for the cancellation or revision of the assessment, and the Income-tax Officer shall, after examining any accounts and documents and hearing any evidence which the assessee may produce, and such other evidence as the Income-tax Officer may require, determine, by order in writing, the amount of the tax, if any, payable by the assessee, and such determination shall be final :

Provided that, if any assessee making such application files therewith a return of his income under sub-section (*2*) of section 22 of the Indian Income-tax Act, 1922, the application shall be deemed to be a return under that sub-section and shall be dealt with accordingly.

3. A copy of an order under paragraph 2 shall be served on the assessee to whom it relates and shall be deemed to be a notice of demand under section 29 of the Indian Income-tax Act, 1922.

4. The above procedure shall apply also to the assessment and collection during the financial year 1935-36 of incomes of Rs. 1,000 and upwards and less than Rs. 2,000 which have escaped assessment in the financial year 1934-35.

STATEMENT OF OBJECTS AND REASONS.

The object of this Bill is to continue for a further period of one year certain duties and taxes imposed under the Indian Finance Act, 1934, which would otherwise cease to have effect from the 1st April 1935 ; to reduce the income-tax on incomes of Rs. 1,000 or upwards but less than Rs. 2,000 ; to reduce the surcharges on income-tax and super-tax ; to reduce the import and excise duties on silver ; and to abolish the export duty on raw skins.

2. Clauses 2 and 4 provide for the continuance for a further period of one year of the existing provisions regarding salt duty and inland postage rates. The duty of Rs. 1-4-0 per maund on salt remains liable to the additional duty imposed under Section 5 of the Indian Finance (Supplementary and Extending) Act, 1931.

3. Clause 3 provides for the reduction of the import duty on silver from five annas per ounce to two annas per ounce and for the abolition of the export duty on raw skins.

4. Clause 5 provides for the continuance for a further period of one year of the existing rates of income-tax and super-tax with the following alterations :—

(*a*) The rate of income-tax when the total income is Rs. 1,000 or upwards but is less than Rs. 1,500 is reduced from two pies to $1\frac{1}{3}$ pies ;

(*b*) The rate of income-tax when the total income is Rs. 1,500 or upwards, but less than Rs. 2,000 is reduced from four pies to $2\frac{2}{3}$ pies ; and

(*c*) the surcharges on income-tax and super-tax are reduced from one-fourth to one-sixth.

As it is proposed to retain the tax on incomes of Rs. 1,000 and upwards but below Rs. 2,000 per annum at a reduced rate, clause 5(*4*) provides for the continuance of the existing procedure for the assessment of such incomes which has already been approved by the Legislature.

Clause 5(*5*) provides that incomes from salaries and interest on securities should be finally taxed for purposes of income-tax and not super-tax at the rates applicable to a total income of like amount which was in force at the time when the taxation at source on these incomes took place ; otherwise salary earners, for example, will be able not only to secure the advantage of reduced rates during 1935-36 but also to obtain a refund of part of the tax which had been deducted from their salaries during 1934-35. It also makes a similar provision for purposes of refunds under sub-section (*1*) or sub-section (*3*) of section 48 in respect of dividends declared in the year ending 31st March, 1935, or of payments made in the said year of salaries or of interest on securities. These provisions form the counterpart of a concession that has been allowed from time to time in the past when rates of income-tax were being enhanced.

5. Clause 6 provides for the reduction of the excise duty on silver corresponding to the reduction in import duty.

6. The reasons for making the above changes have been fully explained in my budget speech.

NEW DELHI ;
The 28th February, 1935.

P. J. GRIGG.

MD. RAFI,
Secy. to the Govt. of India.

GOVERNMENT OF INDIA.

Legislative Assembly Department.

The following Bill was introduced in the Legislative Assembly on the 18th February, 1935 :—

L. A. BILL No. 11 OF 1935.

A Bill further to amend the Code of Civil Procedure, 1908, for certain purposes.

WHEREAS it is expedient further to amend the Code of Civil Procedure, 1908, for the purposes hereinafter appearing ; It is hereby enacted as follows :— V of 1908.

Short title.

1. This Act may be called the Code of Civil Procedure (Third Amendment) Act, 1935.

Amendment of section 60, Act V of 1908.

2. In the proviso to sub-section (*1*) of section 60 of the Code of Civil Procedure, 1908, V of 1908.

(*a*) for clauses (*h*) and (*i*) the following clauses shall be substituted, namely :—

"(*h*) the wages of labourers and domestic servants, whether payable in money or in kind, and salary, if the amount of the salary does not exceed one hundered rupees monthly;

(*i*) the salary of any public officer or of any servant of a railway company or local authority to the extent of the first hundred rupees and one-half the remainder of such salary :

Provided that, where the whole or any part of the portion of such salary liable to attachment has been under attachment whether continuously or intermittently for a total period of twenty-four months in execution of one or more than one decree, such portion shall finally cease to be liable to attachment in execution of such decree or decrees and shall not be liable to attachment in execution of any other decree until the expiry of a further period of twelve months ;" ;

(*b*) in clause (*k*), for the figures " 1897 " the figures " 1925 " shall be substituted ;

(*c*) for clause (*l*) the following clause shall be substituted, namely :—

" (*l*) any allowance forming part of the emoluments of any public officer or of any servant of a railway company or local authority which the Governor General in Council may by notification in the Gazette of India declare to be exempt from attachment, and any subsistence grant or allowance made to any such officer or servant while under suspension ; " ; and

(*d*) the *Explanation* at the end shall be re-numbered as *Explanation 1* and, after the *Explanation* as so re-numbered, the following *Explanation* shall be added, namely :—

" *Explanation 2.*—In clauses (*h*) and (*i*), 'salary' means the total monthly emoluments, excluding any allowance declared exempt from attachment under the provisions of clause (*l*), derived by a person from his employment whether on duty or on leave. "

Retrospective effect.

3. The amendments made by section 2 shall have effect in respect of any proceedings arising out of any suit instituted on or after the first day of February, nineteen hundred and thirty-five.

STATEMENT OF OBJECTS AND REASONS.

The Royal Commission on Labour drew attention to the indebtedness prevailing among certain classes of workers, and expressed the view that this was due mainly to the credit enjoyed by them and the facilities afforded to creditors by the law relating to the attachment of salaries. With a view to reducing credit, the Commission recommended that wages and salaries of workmen receiving less than Rs. 300 a month should be entirely exempted from attachment. Enquiries made by the Government of India in consultation with Local Governments afford justification for action on the lines suggested by the Commission and in particular reveal a serious state of indebtedness among certain classes of Government employees. The Government of India therefore propose to amend section 60 of the Civil Procedure Code to provide—

(1) that salaries, not exceeding Rs. 100 a month, of all workers should be totally exempt from attachment,

(2) that the pay of servants of Government, Railway Companies and local authorities getting more than Rs. 100 a month should be exempt to the extent of the first Rs. 100 and one-half of the remainder, and

(3) that while the attachable portion of the pay of servants of Government, Railway Companies and local authorities should remain as at present liable to continuous attachment the period of attachment should be restricted as follows, *viz.*, that after a debtor's pay has been attached for a total period of two years (in one or more periods) no further attachment should be possible in favour of the same decree or in favour of any other decree until twelve months have elapsed.

The Bill seeks to give effect to these proposals. It also takes away the privileged position of Co-operative Societies under the proviso to sub-clause (*iii*) under clause (*i*) of the proviso to sub-section (*1*) of section 60 of the Code as in the opinion of the Government of India it is unnecessary to continue that privilege.

2. Under sub-clause (*h*) of the proviso to sub-section (*1*) of section 60 of the Code of Civil Procedure, 1908, leave allowances if less than salary are exempt from attachment, but under sub-clause (*i*) leave allowances, if equal to salary on duty, are liable to attachment. Since the introduction of time-scales of pay in the Services, this has created an anomalous position for if an officer drawing pay on a time-scale proceeds on leave before reaching the maximum of the scale, the whole of his leave allowance, being less than his salary on duty, is exempt from attachment, while if he goes on leave after drawing the maximum pay of the scale for over a year, the whole of his leave allowance, being equal to his salary on duty, would be liable to attachment. It is accordingly proposed to place leave allowances and salary on duty in exactly the same position as regards attachment. At the same time the Bill gives to the Governor General in Council power to exempt certain allowances from attachment, the object being to enable him to exempt certain compensatory allowances granted for specific purposes.

3. The Bill also provides that the amending legislation shall apply to all suits instituted on or after February 1, 1935.

NEW DELHI;

The 8th February, 1935.

H. D. CRAIK.

MD. RAFI,

Secy to the Govt. of India.

GOVERNMENT OF INDIA.

Legislative Assembly Department.

The following Bill was introduced in the Legislative Assembly on the 27th February, 1935 :—

L. A. BILL No. 12 OF 1935.

A Bill reserve the Coastal Traffic of India to Indian Vessels.

WHEREAS it is expedient to provide for the rapid development of an Indian Merchant Marine ;

AND WHEREAS for this purpose it is expedient to reserve the coastal traffic of India to Indian-controlled vessels ;

It is hereby enacted as follows :—

Short title, extent and commencement.

1. (*1*) This Act may be called the Indian Coastal Traffic (Reservation) Act, 193 .

(*2*) It extends to the whole of British India.

(3) It shall come into force on such date as the Governor General in Council may, by notification, appoint :

Provided that no such date shall be appointed until His Majesty's pleasure on this Act has been publicly signified in British India by notification.

Definitions.

2. For the purposes of this Act, unless there is anything repugnant in the subject or context,—

(*1*) a ship shall be deemed to be engaged in " coastal traffic " if it takes on board cargo or passengers at any port in British India, other than Aden or Perim, to be carried to, and delivered or landed at, any other port in British India, other than Aden or Perim :

Provided that a ship shall not be deemed to be engaged in coastal traffic by reason only of the fact that it takes on board or carries—

(*a*) passengers holding through tickets to or from a port outside British India ;

(*b*) cargo consigned on a through bill of lading to or from a port outside British India and not transhipped to or from any ship engaged in coastal traffic and not licensed under this Act ;

(*c*) mails, in the course of a continuous voyage to or from a port outside British India ;

(*d*) pilots, as passengers who are proceeding from their home station for the purpose of meeting vessels requiring their services, or who are returning to their home station after piloting vessels ; or

(*e*) in the case of an oil-tanker, oil in bulk ;

(*2*) " Indian " means an Indian British subject or the Ruler or a subject of a state in India ;

(*3*) " Indian-controlled ship " means a ship chartered by the Government, or a ship owned by or, if the ship is chartered, owned and chartered by—

(*a*) an Indian, or

(*b*) a company incorporated and registered in British India, or a corporation, partnership or association—

(*i*) in which, in the case of a company, not less than 75 per cent. of the shares or stock, other than debenture stock, or in the case

of a corporation, partnership or association, not less than 75 per cent. of the capital and the right to not less than 75 per cent. of the profit, is vested in Indians in their own right and for their own benefit, free from any trust or fiduciary obligation in favour of any person other than an Indian ;

(*ii*) of which the Chairman of the Board of Directors and the Managing Director, if any, and not less than 75 per cent. of the members of the Board of Directors are Indians ;

(*iii*) in which not less than 75 per cent. of the voting power is vested in Indians :

Provided that voting power vested in an Indian shall be deemed not to be so vested if, by any contract or understanding or otherwise, it is arranged that such power is to be exercised directly or indirectly on behalf of any person other than an Indian ; and

(*iv*) of which the Managing Agent, if any, is an Indian or the Managing Firm, if any, fulfils the conditions specified in clauses (*i*), (*ii*) and (*iii*) ;

(*4*) " licence " means a licence for coastal traffic issued under this Act ;

(*5*) " notification " means a notification in the Gazette of India ; and

(*6*) " prescribed " means prescribed by rules made under this Act.

No ship to engage in coastal traffic unless licensed.

3. No ship shall engage in coastal traffic unless it is licensed for the purpose under this Act.

Determination of total tonnage of ships to be licensed.

4. (*1*) The Governor General in Council shall, in each year, not less than two months before the date on which it is intended to issue licences, by notification, publish an estimate of the total tonnage which is, in his opinion, essential for the needs of the coastal traffic in that year, and invite opinions as to such estimate and fix the date on which such opinions will be taken into consideration and the period within which applications for licences may be made.

(*2*) The Governor General in Council, after considering any opinions which he may receive before the date so fixed, shall determine and publish by notification the total tonnage essential for the needs of the coastal traffic.

Applications for licences.

5. (*1*) Applications for licences may be made within the period fixed under sub-section (*1*) of section 4.

(*2*) Every such application shall be in the prescribed form, and shall contain a declaration signed by the applicant stating whether the ship in respect of which the application is made is an Indian-controlled ship and such particulars as may be prescribed to enable the Governor General in Council to satisfy himself as to the accuracy of such declaration.

Licences.

6. (*1*) The Governor General in Council may, subject to the conditions hereinafter contained in section 7, after considering the applications, issue licences in the prescribed form and on the prescribed conditions to ships of an aggregate tonnage not exceeding the tonnage determined under sub-section (*2*) of section 4.

(*2*) A licence shall be valid only for the year in respect of which it is issued.

(*3*) Before issuing a licence, the Governor General in Council may require from the person applying therefor such security, not exceeding fifty thousand rupees, as the Governor General in Council may think fit, for compliance with the conditions thereof.

Issue of licences to Indian-controlled ships.

7. (*1*) In respect of the first year after the commencement of this Act, licences shall be issued to all Indian-controlled ships in respect of which applications for licences have been received which were Indian-controlled ships on the day of .

(*2*) In respect of the second, third and fourth years' licences shall be reserved for Indian-controlled ships up to an aggregate tonnage of two-fifths, three-fifths, and four-fifths, respectively, of the tonnage determined for the years under sub-section (*2*) of section 4.

(*3*) In respect of every year after the fourth year, licences shall be issued to Indian-controlled ships only :

Provided that if, after every application for a licence in respect of an Indian-controlled ship has been considered, the aggregate tonnage of the Indian-controlled ships which have been licensed is less, in the second, third or fourth year, than the tonnage up to which licences have been reserved for Indian-controlled ships under sub-section (*2*), or, in any year after the fourth year, than the tonnage determined under sub-section (*2*) of section 4, the deficiency may be made good by the issue of licences to ships other than Indian-controlled ships.

Power to issue permits to unlicensed ships.

8. If the Governor General in Council is satisfied that—

(*a*) no licensed ship is available for, or that the service rendered by licensed ships is inadequate to the needs of, the coastal traffic to or from any port or between any ports in British India, and

(*b*) it is desirable in the public interest to take action in this behalf,

the Governor General in Council may issue permits in the prescribed form to unlicensed ships to engage for a period not exceeding three months in coastal traffic, subject to such conditions as may be specified in the permits, and nothing in section 3 shall apply to a ship to which such a permit has been issued during the continuance of the permit.

Penalties.

9. (*1*) Any person who—

(*a*) is the owner, charterer or agent or has command or charge of a ship which contravenes the provisions of section 3, or

(*b*) contravenes the conditions of a licence, or

(*c*) signs a false statement or false declaration in an application for a licence, knowing the same to be false,

shall be punishable with simple imprisonment which may extend to six months, or with fine which may extend to ten thousand rupees, or with both.

(*2*) Where a person punishable under sub-section (*1*) is a company, corporation, partnership, or association, any secretary, director or other officer or person concerned with the management thereof shall be punishable as provided in that sub-section, unless he proves that the offence was committed without his knowledge or without his consent.

Cancellation of licences.

10. (*1*) If the Governor General in Council is satisfied that there has been a breach of the conditions of a licence, or that any licence has been issued upon an application which contains a false statement or false declaration, the Governor General in Council may cancel the licence :

Provided that no licence shall be so cancelled unless the holder thereof has been given an opportunity to show cause against the cancellation or has been convicted of an offence under clause (*b*) or clause (*c*) of sub-section (*1*) of section 9 in respect thereof.

(*2*) Where any licence is cancelled under this section in consequence of a breach of the conditions thereof, the Governor General in Council may direct that any security taken under sub-section (*3*) of section 6 for compliance with such conditions shall be forfeited either in whole or in part.

Power to make rules.

11. (*1*) The Governor General in Council may, by notification, make rules for carrying out the purposes of this Act.

(*2*) In particular and without prejudice to the generality of the foregoing power, such rules may provide for all or any of the following matters, namely :—

(*a*) the form of licences ;

(*b*) the conditions of licences, includng the conditions under which a licensed ship may be chartered ;

(*c*) the manner and form in which application for licences shall be made ;

(*d*) the particulars to be contained in applications for licences ; and

(*e*) the form of permits.

(*3*) No notification shall be made under sub-section (*1*), until it has been laid in draft before both Chambers of the Indian Legislature and the Governor General in Council has taken into consideration any Resolution relating to the draft which either Chamber may have passed within the next thirty days on which that Chamber has sat after the draft has been so laid.

Exemption of public ships.

12. This Act shall not apply to ships belonging to His Majesty or the Government, or to ships belonging to any foreign Prince or State and employed otherwise than for profit in the public service of that Prince or State.

Saving.

13. Nothing contained in this Act shall be deemed to derogate from any of the provisions of the Indian Merchant Shipping Act, 1923 XXI of 1923.

STATEMENT OF OBJECTS AND REASONS.

The object of this Bill is to provide for the employment of Indian tonnage in the coastal traffic of British India and of the Continent of India. This Bill is intended to serve as a powerful aid to the rapid development of an Indian Merchant Marine. Several attempts made in this direction in the past have all practically failed, owing, it is believed, to the existence of powerful non-Indian interests in the coasting trade of India. There can be no doubt that the growth of an Indian Merchant Marine would prove a powerful factor in the employment of Indian talent in various directions in a manner calculated to advance the national interests of India.

This Bill was introduced in the last Assembly by Mr. Sarabhai N. Haji, M.L.A., and was referred to a Select Committee whose report was presented to the House. The Bill then lapsed owing to the dissolution of the Assembly. The draft of the Bill now submitted is the same as was approved by the Select Committee.

ZIAUDDIN AHMAD.

MD. RAFI,

Secy. to the Govt. of India.

GOVERNMENT OF INDIA.

Legislative Assembly Department.

The following Bill* was introduced in the Legislative Assembly on the 28th February, 1935 :—

L. A. BILL No. 20 OF 1935.

A Bill further to extend the operation of the Salt (Additional Import Duty) Act, 1931.

WHEREAS it is expedient further to extend the operation of the Salt (Additional Import Duty) Act, 1931 ; It is hereby enacted as follows :— XIV of 1931.

Short title.

1. This Act may be called the Salt Additional Import Duty (Extending) Act, 1935.

Amendment of section 1, Act XIV of 1931.

2. In sub-section (*3*) of section 1 of the Salt (Additional Import Duty) Act, 1931, for the figures " 1935 " the figures " 1936 " shall be substituted. XIV of 1931.

* The Governor General has been pleased to accord the sanction required by section 67 (2) of the Government of India Act.

STATEMENT OF OBJECTS AND REASONS.

The purpose of this Bill is to extend the life of the Salt (Additional Import Duty) Act, 1931, for a further period of twelve months.

NEW DELHI ;
The 23rd January, 1935.

P. J. GRIGG.

MD. RAFI,
Secy. to the Govt. of India.

Registered No. C207

Appendix to

The Calcutta Gazette

THURSDAY, MARCH 28, 1935.

General Jury List

Common Jury List

List of persons liable to serve on common Juries in the High Court of Judicature at Fort William in Bengal for the year ensuing from 1st May 1935 pursuant to Act V of 1898.

Remarks.—Errors in names and descriptions can be corrected on communication to the Office of the Clerk of the Crown. Revised list will be published on the 25th day of April 1935. Any person who deems himself, for any reason wrongly included in the list should adddress the Clerk of the Crown on the subject immediately as the revised list will be final.

No.	Names.	Style or calling.	Residence or place of business.	Religion.
	A			
	Abraham, A E J	Assistant, Andrew Yule & Co, Ld	8, Clive Row	Jew
	Abraham, E	Measurer, Bengal Chamber of Commerce	2, Clive Street	Christian
	Abraham, S D	Inspector, Agency Department, E B R	3, Kaylaghat Street	Jew
	Abraham, Walter	Assistant, E Meyer & Co (1926), Ld	2, Clive Ghat Street	ditto
	Acaster, Alfred George	Assistant, Bengal Chamber of Commerce	2, Clive Street	Christian
	Acheson, Fredrick William	Assistant Engineer, Construction, C E S C, Ld	Victoria House	ditto
	Adami, G G C	Assistant, Burmah-Shell Co of India, Ld	Hongkong House	ditto
	Adams, James Aloysius	Assistant, J B Norton & Sons, Ld	Norton Buildings	ditto
	Adamson, G A	Assistant, Mackinnon, Mackenzie & Co	16, Strand Road	ditto
	Adelaide, G E	Assistant, Mackinnon, Mackenzie & Co	8, Strand Road	ditto
	Adcock, W H	Assistant, G E C (India), Ld	Magnet House, Chittaranjan Avenue (South).	ditto

Ager, Eric Frank ..	.. Offg Asstt Superintendent, Operating Department, E I R	.. E I R House	..	.. ditto
Aimable, Harverd Clarence	.. Service Manager, Walford's Transport, Ld ..	.. 71-73, Park Street	..	.. ditto
Aitchison, Andrew Donald	.. Assistant Accountant, National Bank of India, Ld ..	.. 104, Clive Street	..	.. ditto
Aitkins, K P	.. Measurer, Bengal Chamber of Commerce	.. 2, Clive Street	..	.. ditto
Albares, Eric Raymond ..	.. Assistant, Duncan Bros & Co, Ld	.. 101, Clive Street	..	.. ditto
Allison, John Lawrence ..	.. Assistant, London & Lancashire Insurance Co, Ld ..	.. 2, Fairlie Place	..	.. ditto
Ambrose, G S ..	.. Contract Engineer, Associated Electrical Industries (India), Ld ..	A-3, Clive Buildings	..	.. ditto
Ames, Oswald Clarke ..	.. Assistant, Duncan Brothers & Co, Ld	.. 101, Clive Street	..	.. ditto
Anderson, A C ..	.. Assistant, Hall & Anderson, Ld	.. 31, Chowringhee	..	.. ditto
Anderson, D K ..	.. Sub-Accountant, Mercantile Bank of India, Ld ..	.. 8, Clive Street	..	.. ditto
Anderson, E J ..	.. Assistant, Burmah-Shell Co of India, Ld ..	.. Hongkong House	..	.. ditto
Anderson, J J ..	.. Assistant, J Thomas & Co	.. 8, Mission Row	..	.. ditto
Anderson, John Chaplain	.. Assistant, W T Henley's Telegraph Works Co, Ld ..	.. Old Court House Corner ..		.. ditto
Anderson, W G M ..	.. Sub-Accountant, Chartered Bank of India, Australia & China ..	1-1, Clive Street	..	.. ditto
Andree, Ambrosa Lorenz	.. Journalist, *Statesman*, Ld	.. Statesman House	..	.. ditto
Andrew, W E ..	.. Assistant, J Thomas & Co	.. 8, Mission Row	..	.. ditto
Andrews, E T ..	.. Assistant, McLeod & Co	.. 28, Dalhousie Square	..	.. ditto
Andrews, Percival Thomas	.. Assistant, Samuel Fitze & Co, Ld	.. 26, Chowringhee	..	.. ditto

No.	Names.	Style or calling.	Residence or place of business.	Religion.
	Anscombe, Harold Clement ..	Assistant, Ellerman's Arracan Rice & Trading Co, Ld ..	26, Dalhousie Square ..	.. Christian.
	Apcar, G J	Assistant, Heatly & Gresham, Ld	.. 6, Waterloo Street	ditto
	Aquilina, Frank	Assistant, Grahams Trading Co (India), Ld ..	.. 6, Lyons Range	ditto
	Aquilina, John C	Assistant, Grahams Trading Co (India), Ld ..	.. 6, Lyons Range	ditto
	Archard, P W	Assistant, Barry & Co	.. 2, Fairlie Place	ditto
	Archer, C W	Assistant, Jardine Skinner & Co	.. 4, Clive Row	ditto
	Archer, G W	Measurer, Bengal Chamber of Commerce ..	.. 2, Clive Street	ditto
	Archibald, Ian Hastings ..	Assistant Accountant, National Bank of India, Ld ..	.. 104, Clive Street	ditto
	Arratoon, A E	Assistant, Lovelock & Lewes	.. 4, Lyons Range	ditto
	Arratoon, A L	Teacher, Armenian College and Philanthropic Academy	.. 39, Free School Street	ditto
	Atha, Andrew	Assistant, Stewarts & Lloyds, Ld	.. 6, Royal Exchange Place ..	ditto
	Atherton, Frederick George ..	Assistant, G Atherton & Co (Eastern), Ld ..	.. 8, Clive Street	ditto
	Atkinson, Albert Allan	Salesman, C C Wakefield & Co, Ld	.. 7, Royal Exchange Place ..	ditto
	Atkinson, Lawrence Patrick ..	News Editor, "Star of India"	.. 9, Dharamtala Street	ditto
	Atkinson, T C	Assistant, Turner, Morrison & Co, Ld	.. 6, Lyons Range	ditto
	Augustin, H	Overseer, P S Office, E I R	.. E I R House	ditto
	Augustin, N A	Assistant, Shaw, Wallace & Co	4, Bankshall Street	ditto

Aviet, E E	.. .. Assistant, Shaw, Wallace & Co	.. ..	.. 4, Bankshall Street	.. ..	ditto
Ayrton, S M	.. .. Assistant, Shaw, Wallace & Co	.. ..	.. 4, Bankshall Street	.. ..	ditto
B					
Badelow, W J	.. .. Assistant, Balmer, Lawrie & Co, Ld	.. ..	.. 103, Clive Street	.. ..	Christian
Bagley, F R	.. .. Assistant Accountant, Brooke Bond (India), Ld	..	.. 2, Metcalfe Street	.. ..	ditto
Bagnall, E V	.. .. Measurer, Bengal Chamber of Commerce	..	.. 2, Clive Street	.. ..	ditto
Bailey, D J	.. .. Assistant, Mackinnon, Mackenzie & Co	.. ..	.. 16, Strand Road	.. ..	ditto
Bailey, G F M	.. .. Assistant, Roberts, McLean & Co, Ld	.. ..	.. 101, Clive Street	.. ..	ditto
Bailey, J A	.. .. Assistant, Roberts McLean & Co, Ld	.. ..	.. 101, Clive Street	.. ..	ditto
Bailey, J A	.. .. Assistant, Standard Vacuum Oil Co	.. ..	.. 6, Church Lane	.. ..	ditto
Baker, H J	.. .. Melter, Calcutta Mint	.. ..	.. 47, Strand Road	.. ..	ditto
Balcombe, L W	.. .. Assistant, Turner, Morrison & Co, Ld	.. ..	.. 6, Lyons Range	.. ..	ditto
Baldassari, A E	.. .. Assistant, I G N & Ry Co, Ld	.. ..	.. 4, Fairlie Place	.. ..	ditto
Baldwin, A R A	.. .. Assistant, Turner, Morrison & Co, Ld	.. —	.. 6, Lyons Range	.. ..	ditto
Ball, Sydney Harold Walter	.. Assistant, Hoare Miller & Co, Ld	.. ..	.. 5, Fairlie Place	.. ..	ditto
Bance, Arthur Frederick	.. Accountant, W Billinton & Co, Ld	.. ..	.. Mercantile Buildings, Lalbazar	..	ditto
Banes, George	.. .. Assistant, Whiteaway Laidlaw & Co, Ld	..	.. 7, Chowringhee	.. ..	ditto
Bannerman, James Meiklejohn	.. Salesman, Lyall Marshall & Co	.. ..	.. 4, Fairlie Place	.. ..	ditto

No.	Names.	Style or calling.	Residence or place of business.	Religion.
	Banyard, Peter	Assistant, Begg, Dunlop & Co, Ld	2, Hare Street	Christian
	Baptist, J M	Clerk, C M's Office, E I R	E I R House	ditto
	Baptiste, Dennis Vincent	Assistant, Hoare Miller & Co, Ld	5, Fairlie Place	ditto
	Baptiste, Edwin	Assistant, Ranken & Co, Ld	4, Old Court House Street	ditto
	Bapty, Frederick	Agent, Minimax, Ld	Mercantile Buildings	ditto
	Barclay, Ian Campbell	Assistant, Macneill & Co	2, Fairlie Place	ditto
	Barlow, C	Measurer, Bengal Chamber of Commerce	2, Clive Street	ditto
	Barlow, W E	Measurer, Bengal Chamber of Commerce	2, Clive Street	ditto
	Barnes, H L	Assistant, Lovelock & Lewes	4, Lyons Range	ditto
	Barrett, Eric Lancelot	Bookseller, W Newman & Co, Ld	3, Old Court House Street	ditto
	Barrett, H C	Engineer, Holmes Wilson & Co, Ld	Norton Buildings	ditto
	Barry, Charles Victor	Assistant, Standard Vacuum Oil Co	6, Church Lane	ditto
	Basil, Mefton Arratoon	Assistant, Mutual Indemnity and Finance Corporation (India), Ld	32-1, Dalhousie Square, South	ditto
	Batchelor, Geo F F	Assistant, James Luke & Sons	7, Royal Exchage Place	ditto
	Bateman, C R	Measurer, Bengal Chamber of Commerce	2, Clive Street	ditto
	Bateson, James Dingwall Mayhew	Assistant, Gillanders, Arbuthnot & Co	8, Clive Street	ditto
	Batty, W H	Assistant, W S Cresswell & Co	3, Clive Row	ditto
	Baxter, C C	Assistant, Kettlewell, Bullen & Co, Ld	21, Strand Road	ditto

Baxter, Thomas Nimmo	.. Assistant, New Zealand Insurance Co, Ld ..	..	.. 26, Dalhousie Square ..	.. ditto
Beale, Robert ..	.. Assistant, John King & Co, Ld ..	..	.. 166, Karnani Mansions ..	.. ditto
Beard, Frederick Hugh	.. Showroom Manager, C E S C, Ld ..	..	.. Victoria House ..	.. ditto
Beath, D ..	.. Sub-Accountant, Chartered Bank of India, Australia & China		.. 1-1, Clive Street ..	.. ditto
Beck, Frank Leslie, B A	.. Assistant Master, La Martiniere ..	..	.. 11, Loudon Street ..	.. ditto
Beckwith, R J ..	.. Assistant, Lipton, Ld ..	..	.. 9, Weston Street ..	.. ditto
Beedie, H ..	.. Assistant, J Thomas & Co ..	..	.. 8, Mission Row ..	.. ditto
Begbie, F W (Capt) ..	.. Assistant, I G N & Ry Co, Ld ..	..	.. 4, Fairlie Place ..	.. ditto
Begbie, Ralph Arnold ..	.. Assistant, Macneill & Co	..	.. 2, Fairlie Place ..	.. ditto
Behrend, S W E ..	.. Assistant, Imperial Chemical Industries (India), Ld ..		.. 18, Strand Road ..	.. ditto
Belchambers, G E ..	.. Clerk, Calcutta Mint	..	.. 47, Strand Road ..	.. ditto
Bell, A N ..	.. Third Passing Officer, Imperial Bank of India ..		.. Strand Road ..	.. ditto
Bell, Cecil Charles Campbell	.. Assistant, James Finlay & Co, Ld ..	..	.. 1, Clive Street ..	.. ditto
Bell, E C ..	.. Assistant, Imperial Chemical Industries (India), Ld ..		.. 18, Strand Road ..	.. ditto
Bell, John ..	.. Assistant, Ranken & Co, Ld ..	..	.. 4, Old Court House Street	.. ditto
Bellety, B ..	.. Assistant, Accountant-General's Office, Bengal ..		.. Treasury Buildings ..	.. ditto
Bellety, G F ..	.. Assistant, Turner, Morrison & Co, Ld ..	..	.. 6, Lyons Range ..	.. ditto
Belletty, Stanislaus Rideout	.. Head Clerk, Royal Calcutta Turf Club ..	..	.. 11, Russell Street ..	.. ditto

No.	Names.	Style or calling.	Residence or place of business.	Religion.
	Bennett, C K, B E	Inspector of Factories, Bengal	40-1A, Free School Street	Christian
	Bent, John Philip Howard	Assistant, Begg, Dunlop & Co, Ld	2, Hare Street	ditto
	Bett, A M	Assistant, Jute Industries, Ld	1-A, Hare Street	ditto
	Bevan, Basil John	Assistant, Thos Cook & Son, Ld	4, Dalhousie Square	ditto
	Bevan, K W	Assistant, Lovelock & Lewes	4, Lyons Range	ditto
	Biber, Alfred Marsden	Assistant, T E Thomson & Co, Ld	9, Esplanade, East	ditto
	Billon, B N	Assistant, Lipton, Ld	9, Weston Street	ditto
	Billon, H E	Assistant, Barry & Co	2, Fairlie Place	ditto
	Binyon, J B	Assistant, Hall & Anderson, Ld	31, Chowringhee	ditto
	Birch, George	Engineer, Linotype & Machinery, Ld	21, Bowbazar Street	ditto
	Birch, Joseph James Nathaniel	Assistant, Army & Navy Co operative Society, Ld	41, Chowringhee	ditto
	Bird, Herbert	Assistant, Macneill & Co	2, Fairlie Place	ditto
	Bird, N C	Assistant, I G N & Ry Co, Ld	4, Fairlie Place	ditto
	Bischoff, Gerald	Service Stn Manager, Walford Transport, Ld	71-73, Park Street	ditto
	Black, John Orme Lindsay	Sub-Accountant, Eastern Bank, Ld	9, Clive Street	ditto
	Black, W A	Partner, Reed, Ward & Co	7, Lyons Range	ditto
	Blacker, C W	Draftsman, C M E's Office, E I R	E I R House	ditto

Blacker, J W	Offg Assistant Superintendent, Operating Dept, E I R	E I R House	..	ditto
Blackford, Edward George	Boiler Inspector	40-1A, Free School Street	..	ditto
Blackwood, J	Sub-Accountant, Chartered Bank of India, Australia and China	1-1, Clive Street	..	ditto
Blake, J H	Superintendent, Landing & Shipping, B I S N Co, Ld	8, Strand Road	..	ditto
Blake, Lionel Alfred	Assistant, T E Thomson & Co, Ld	9, Esplanade, East	..	ditto
Blake, P F	Assistant, Associated British Machine Tool Makers, Ld	6, Old Post Office Street	..	ditto
Blanche, Charles Lionel	Engineer, Greaves Cotton & Co, Ld	60, Dharamtala Street	..	ditto
Blizzard, M W	Assistant, Standard Vacuum Oil Co	6, Church Lane	..	ditto
Blong, Gilbert Adrian	Assistant, Bird & Co	1-1, Clive Street	..	ditto
Bloud, A F	Measurer, Bengal Chamber of Commerce	2, Clive Street	..	ditto
Blue, Alexander	Assistant, Gillanders, Arbuthnot & Co	8, Clive Street	..	ditto
Boase, E R	Sub-Accountant, Lloyds Bank, Ld	101-1, Clive Street	..	ditto
Bogaars, A E	Assistant, Balmer, Lawrie & Co, Ld	103, Clive Street	..	ditto
Bollins, Cyril James	Assistant, Martin & Co	12, Mission Row	..	ditto
Bomford, B C M	Assistant, D L Millar & Co, Ld	24, Dalhousie Square, West	..	ditto
Bombernard, A L A	Sub-Accountant, Mercantile Bank of India, Ld	8, Clive Street	..	ditto
Booth, E K	Assistant, Mackinnon, Mackenzie & Co	16, Strand Road	..	ditto

No.	Names.	Style or calling.	Residence or place of business.	Religion.
	Borthwick, S G	Assistant Accountant, Port Commissioners' Office	Strand Road	Christian
	Bouckley, T A	Assistant, Manton & Co	13, Old Court House Street ..	ditto
	Bourke, J N	Assistant Tea Buyer, Harrisons & Crosfield, Ld	6, Church Lane	ditto
	Bower, R H	Assistant, Imperial Chemical Industries (India), Ld ..	18, Strand Road	ditto
	Bowman, Edward	Officiating Chief Claims Clerk, C C M's Office, E I R ..	E I R House	ditto
	Boyce, C O	Office Superintendent, Eng Deptt, Port Commissioners' Office ..	Strand Road	ditto
	Bradby, M S	Assistant, Shaw, Wallace & Co	4, Bankshall Street	ditto
	Bradley, J M	Assistant, Mackinnon, Mackenzie & Co	16, Strand Road	ditto
	Braganza, Manuel Anthony ..	Clerk, Prudential Assurance Co, Ld	Clive Buildings	ditto
	Brain, Frank Edward	Salesman, Texas Co (India), Ld	11, Espladade, East	ditto
	Bray, R P	Assistant, Jardine, Skinner & Co	4, Clive Row	ditto
	Breakell, J C	Assistant, Kettlewell, Bullen & Co, Ld	21, Strand Road	ditto
	Bremner, W	Assistant, Kilburn & Co	4, Fairlie Place	ditto
	Bretton, Geo de	Assistant, Andrew Yule & Co, Ld	8, Clive Row	ditto
	Bridge, Francis	Assistant, General Accident, Fire & Life Assurance Corpn, Ld ..	7, Hare Street	ditto
	Brindley, E C	Loading Supervisor, I G N & Ry Co, Ld	Armenian Ghat	ditto

Brock, Edwin Harold	Assistant Manager, Baldwin Locomotive Works	5, Dalhousie Square	ditto
Brodie, Ernest Dingwarr ..	Assistant, Sinclair & Co	5, Commercial Buildings	ditto
Bromley, Robert Carl	Salesman, Alfred, Herbert (India), Ld	13-3, Strand Road	ditto
Bromley, W A	Assistant, Kilburn & Co	4, Fairlie Place	ditto
Brooks, Eric Stanley	Assistant, South British Insurance Co, Ld	5, Clive Street	ditto
Brooks, J H	Assistant, Mather & Platt, Ld	7, Hare Street .. .	ditto
Broughton, C	Assistant, Grahams Trading Co (India), Ld	6, Lyons Range	ditto
Brown, A W	Measurer, Bengal Chamber of Commerce	2, Clive Street	ditto
Brown, Edward	Head Assistant, Office of the Inspector-General of Prisons, Bengal	Writers' Buildings	ditto
Brown, G R R	Assistant, Imperial Chemical Industries (India), Ld ..	18, Strand Road	ditto
Brown, Harry Ernest Johnstone ..	Assistant Accountant, National Bank of India, Ld	104, Clive Street	ditto
Brown, J	Engineer, Mackintosh Burn, Ld	8, Clive Street	ditto
Brown, J C	Measurer, Bengal Chamber of Commerce	2, Clive Street	ditto
Browne, E G	Commercial Editor, Reuters, Ld	26-7, Dalhousie Square	ditto
Bryan, J E	Assistant, Imperial Bank of India	Strand Road	ditto
Brydges, Charles ..	Assistant, Ralli Bros, Ld	16, Hare Street	ditto
Bryson, David Gillespie	Assistant, Blackwood Blackwood & Co	4, Lyons Range	ditto
uchan, D G	Assistant, Andrew Yule & Co, Ld	8, Clive Row	ditto

No.	Names.	Style or calling.	Residence or place of business.	Religion.
	Buchan, Walter ..	.. Superintendent of Circulation, *Statesman*, Ld ..	.. Statesman House ..	.. Christian
	Bucknall, M G ..	.. Assistant, Shaw, Wallace & Co	.. 4, Bankshall Street ..	.. ditto
	Buike, E C ..	.. Measurer, Bengal Chamber of Commerce	.. 2, Clive Street ..	.. ditto
	Buike, O R ..	.. Measurer, Bengal Chamber of Commerce	.. 2, Clive Street ..	.. ditto
	Bull, Allen Henry ..	.. Salesman, Army and Navy Stores, Ld	.. 41, Chowringhee ..	.. ditto
	Bull, H C ..	.. Measurer, Bengal Chamber of Commerce ..	.. 2, Clive Street ..	.. ditto
	Bulley, Henry Samuel ..	.. Engineer, English Electric Co, Ld	.. D-4, Clive Buildings ..	.. ditto
	Burbridge, R ..	.. Assistant, Burn & Co, Ld	.. 12, Mission Row ..	.. ditto
	Burnet, J M ..	.. Assistant, Jardine Skinner & Co ..	.. 4 Clive Row ..	.. ditto
	Burnett, Alfred Joseph ..	.. Assistant, T E Thomson & Co, Ld	.. 9, Esplanade, East ..	.. ditto
	Burns, A D ..	.. Assistant, William Jacks & Co	.. 10, Clive Street ..	.. ditto
	Burns, John Smith ..	.. Assistant, Moran & Co, Ld	.. 4, Lyons Range ..	.. ditto
	Burns, L G ..	.. Assistant, Balmer, Lawrie & Co, Ld	.. 103, Clive Street ..	.. ditto
	Burrows, R J ..	.. Measurer, Bengal Chamber of Commerce ..	.. 2, Clive Street ..	.. ditto
	Burtenshaw, Leslie Williams	.. Architect, Martin & Co	.. 12, Mission Row ..	.. ditto
	Butcher, P L ..	.. Assistant, Hall & Anderson, Ld	.. 31, Chowringhee ..	.. ditto
	Butfoy, A E ..	.. Measurer, Bengal Chamber of Commerce ..	.. 2, Clive Street ..	.. ditto

Buttar, I D W	Assistant, Price, Waterhouse, Peat & Co	B-4, Clive Buildings		ditto
Butterfield, L H	Assistant Superintendent, I G N & Ry Co, Ld	Armenian Ghat		ditto
Byrne, Rowland Wilmot	Assistant, Gillanders, Arbuthnot & Co	8, Clive Street		ditto
Byron, Geoffrey	Sub-Accountant, Lloyds Bank, Ld	101-1, Clive Street		ditto

C

Cable, Frank Stanley	Assistant, South British Insurance Co, Ld	5, Clive Street		Christian
Cabral, L E	Measurer, Bengal Chamber of Commerce	2, Clive Street		ditto
Cairns, A C	Architect, Mackintosh Burn, Ld	8, Clive Street		ditto
Calder, James McBeath	Assistant, Macneill & Co	2, Fairlie Place		ditto
Caldeira, Wilber Dennis, B A	Assistant Master, Calcutta Boys' School	72, Corporation Street		ditto
Cameron, J	Traffic Assistant, Calcutta Tramways Co, Ld	7, Church Lane		ditto
Campbell, G	Assistant Accountant, P & O Banking Corporation, Ld	1, Fairlie Place		ditto
Campbell, H F	Assistant, Imperial Chemical Industries (India), Ld	18, Strand Road		ditto
Campbell, K M	Assistant, Mackinnon, Mackenzie & Co	16, Strand Road		ditto
Campbell, W J	Assistant, Mackinnon, Mackenzie & Co	16, Strand Road		ditto
Canham, T V	Assistant, Manton & Co	13, Old Court House Street		ditto
Cantopher, G C	Dy Bullion Registrar, Calcutta Mint	47, Strand Road		ditto

No.	Names.	Style or calling.	Residence or place of business.	Religion.
	Carapiet, N	Store-keeper, Geo Henderson & Co, Ld	101-1, Clive Street	Christian
	Carmody, D R	Assistant Secretary to Agent, E I R	E I R House	ditto
	Carrie, J	Assistant, Barry & Co	2, Fairlie Place	ditto
	Carruthers, C	Assistant, Hall & Anderson, Ld	31, Chowringhee	ditto
	Carson, H D	Assistant, Turner, Morrison & Co, Ld	6, Lyons Range	ditto
	Carson, John Joseph St Lawrence	Assistant, Royal Insurance Co, Ld	26 & 27, Dalhousie Square	ditto
	Carter, John	Assistant, Army & Navy Stores, Ld	41, Chowringhee	ditto
	Carter, Lancelot James	Assistant, C E S C, Ld	Victoria House	ditto
	Carvalho, Matthew Joseph	Engineer, F & C Osler, Ld	12, Old Court House Street	ditto
	Carvey, P G	Measurer, Bengal Chamber of Commerce	2, Clive Street	ditto
	Cashmore, G L	Sub-Accountant, Grindlay & Co, Ld	6, Church Lane	ditto
	Castellari, Edwin Alfred	Assistant, J & R Hutchison, Ld	29, Waterloo Street	ditto
	Catchpole, William Robinson	Bookseller, W Newman & Co, Ld	3, Old Court House Street	ditto
	Catt, Horace	Branch Manager, Muir Mills Co, Ld	25, Chowringhee	ditto
	Cearns, I D	Superintendent, C O S S Office, E I R	E I R House	ditto
	Champness, F B	Engineer, G E C (India), Ld	Magnet House, Chittaranjan Avenue (South).	ditto

Chantrill, G	Assistant, Jessop & Co, Ld	93, Clive Street		ditto
Chaplin, Hugh Archie	Assistant, Rali Bros, Ld	16, Hare Street		ditto
Chapman-Mortimer, Thomas Arthur Leopold	Assistant, Bird & Co	1-1, Clive Street		ditto
Charlton, Cyril	Accountant, T E Thomson & Co, Ld	9, Esplanade, East		ditto
Chew, O A	Assistant, Grahams Trading Co (India), Ld	6, Lyons Range		ditto
Chiodetti, J S	Assistant, Turner, Morrison & Co, Ltd	6, Lyons Range		ditto
Christensen, James A	Electrical Engineer, Royal Calcutta Turf Club	11, Russell Street		ditto
Christie, A W	Assistant, J Thomas & Co	8, Mission Row		ditto
Churnside, Joseph William	Assistant, Imperial Tobacco Co of India, Ld	37, Chowringhee		ditto
Clarabut, A P	Assistant, Shaw, Wallace & Co	4, Bankshall Street		ditto
Clark, John Hutchison	Assistant, Landale & Clark, Ld	11, Clive Street		ditto
Clark, L A	Assistant, Jessop & Co, Ld	93, Clive Street		ditto
Clarke, C P	Reader, Calcutta General Printing Co, Ld	300, Bowbazar Street		ditto
Clarke, J R	Sub-Accountant, Lloyds Bank, Ld	101-1, Clive Street		ditto
Clear, Louis	Manager (D & P Dept), Houghton, Butcher (Eastern), Ld	10, Hungerford Street		ditto
Clemenson, Bertram Charles	Assistant, C E S C, Ld	Victoria House		ditto
Cliff, Henry	Sales Manager, Walford Transport, Ld	71-73, Park Street		ditto

No.	Names.	Style or calling.	Residence or place of business.	Religion.
	Cliff, Joseph	Salesman, Walford Transport, Ld	71-73, Park Street	Jew
	Clough, Richard Julian	Assistant, James Finlay & Co, Ld	1, Clive Street	Christian
	Cockburn, T S	Sub-Accountant, Chartered Bank of India, Australia & China	1-1, Clive Street	ditto
	Coelho, Dossu Clifton	Assistant, Alfred, Herbert (India), Ld	13-3, Strand Road	ditto
	Coelho, P B	Measurer, Bengal Chamber of Commerce	2, Clive Street	ditto
	Coffey, F W	Assistant, Imperial Chemical Industries (India), Ld	18, Strand Road	ditto
	Cohen, Aaron Arakie	Assistant, Anderson Wright & Co	22, Strand Road	Jew
	Cohen, Sassoon	Salesman, English Electric Co, Ld	D-4, Clive Street	ditto
	Cohen, Shalome Simon Duck ..	Reader, Caledonian Printing Co, Ld	3, Wellesley Place	ditto
	Cohen, S D	Assistant, Andrew, Yule & Co, Ld	8, Clive Row	ditto
	Colby, R S	Assistant, Mackinnon Mackenzie & Co	8, Strand Road	Christian
	Coles, B L H	Assistant, Turner, Morrison & Co, Ld	6, Lyons Range	ditto
	Collershaw, Herbert	Engineer, Bengal Telephone Corporation, Ld	1-2, Chittaranjan Avenue ..	ditto
	Collins, P R	Assistant, Geo Henderson & Co, Ld	101-1, Clive Street	ditto
	Collins, Ralph Hubert	Assistant Engineer, *Statesman*, Ld	Statesman House	ditto
	Collis, P	Assistant, Balmer Lawrie, & Co, Ld	103, Clive Street	ditto
	Colridge, Arthur	Salesman, Whiteaway, Laidlaw & Co Ld	7, Chowringhee ..	ditto

Coltart, Ronald Hugh ..	.. Assistant, Mackenzie Lyall & Co ..	.. .. 5, Mission Row ..	..	ditto
Conn, D E ..	.. Measurer, Bengal Chamber of Commerce ..	.. .. 2, Clive Street ..	..	ditto
Connelly, B O ..	.. Assistant, Kettlewell Bullen & Co, Ld ..	.. .. 21, Strand Road ..	..	ditto
Conner, Alexander McEwen	.. Assistant, Army & Navy Stores, Ld ..	.. .. 41, Chowringhee ..	..	ditto
Connolly, E N T ..	.. Assistant, Jessop & Co, Ld ..	.. .. 93, Clive Street ..	..	ditto
Connolly, H S ..	.. Assistant, McLeod & Co ..	.. .. 28, Dalhousie Square ..	..	ditto
Cononlly, Joseph Francis	.. Store-keeper, Greaves Cotton & Co, Ld	.. .. 60, Dharamtala Street ..	..	ditto
Conroy, J H W ..	.. Measurer, Bengal Chamber of Commerce ..	.. .. 2, Clive Street ..	..	ditto
Cook, Collin Norman ..	.. Assistant, Army & Navy Stores, Ld ..	.. .. 41, Chowringhee ..	..	ditto
Cook, Henry Milton ..	.. Journalist, *Statesman*, Ld ..	.. .. Statesman House ..	..	ditto
Cooke, S C ..	.. Accountant, Lovelock & Lewes ..	.. .. 4, Lyons Range ..	..	ditto
Cooper, A A ..	.. Assistant, Jessop & Co, Ld ..	.. .. 93, Clive Street ..	..	ditto
Cooper, C A ..	.. Assistant Stores Officer, C O S Office, E I R ..	.. E I R House ..	..	ditto
Cooper, P A V ..	.. Assistant, Andrew Yule & Co, Ld ..	.. .. 8, Clive Row ..	..	ditto
Copping, Peter Norman	.. Assistant, Hamilton & Co, Ld ..	.. .. 8, Old Court House Street	..	ditto
Corlett, Harold Robert ..	.. Salesman, Marshall Sons & Co (India), Ld ..	.. 99, Clive Street ..	..	ditto
Corrin, Adrian Thomas ..	.. Assistant, Hoare Miller & Co, Ld ..	.. .. 5, Fairlie Place ..	..	ditto

No.	Names.	Style or calling.	Residence or place of business.	Religion.
	Corrin, R O	Assistant, Balmer, Lawrie & Co Ld	.. 103, Clive Street	Christian
	Corstorphine, E E	Assistant, Jardine Skinner & Co	.. 4, Clive Row	ditto
	Course, R	Assistant, Imperial Chemical Industries (India), Ld ..	.. 18, Strand Road	ditto
	Cousin, Ernest	Assistant, Hoare Miller & Co, Ld	.. 5, Fairlie Place	ditto
	Coutts, C H	Sub-Head, C A O's Office, E I R	.. E I R House	ditto
	Coventry, Arthur Frederick ..	Engineer, British Insulated Cables, Ld ..	.. 2, Waterloo Street	ditto
	Cowley, Harold Hendric ..	Assistant, Macneill & Co	.. 2, Fairlie Place	ditto
	Cowley, James Kewley	Journalist, *Statesman*, Ld	.. Statesman House	ditto
	Cox, Charles	Assistant, Planters' Stores & Agency Co, Ld ..	.. 11, Clive Street	ditto
	Cox, Thomas	Underwriting Clerk, American Foreign Insurance Association ..	15, Clive Row	ditto
	Coxe, A .. .	Sales Assistant, Remington Rand Inc	.. 3, Council House Street	ditto
	Crabb, T D	Assistant, Octavius Steel & Co, Ld	.. 14, Old Court House Street ..	ditto
	Crabtree, H L	Assistant, Andrew Yule & Co, Ld	.. 8, Clive Row	ditto
	Craig, Robert Gordon ..	.. Salesman, I R G P & T W Co, Ld	.. 7, Old Court House Street ..	ditto
	Crank, Eric Wyndham ..	.. Assistant, Mackenzie Lyall & Co	.. 5, Mission Row	ditto
	Crawshaw, Joseph Sykes ..	Assistant, Ford, Rhodes, Thornton & Co ..	.. Tower House, Chowringhee Square ..	ditto
	Creet, John Zackaria ..	.. Assistant, Andrew Yule & Co, Ld	.. 8, Clive Row	ditto

Crews, O J	Assistant, Standard Vacuum Oil Co	6, Church Lane		ditto
Crinall, W O	Measurer, Bengal Chamber of Commerce	2, Clive Street		ditto
Croker, E H	Assistant, Accounts Dept, Imperial Bank of India	Strand Road		ditto
Cronan, Lubin Bertram	Assistant, T E Thomson & Co Ld	9, Esplanade, East		ditto
Crosie, William	Assistant, Lyall Marshall & Co	4, Fairlie Place		ditto
Cross, W G	Operating & Works Engineer, Calcutta Tramways Co, Ld	7, Church Lane		ditto
Cruickshank, Robert Dickson	Assistant, Thomas Seth Apcar & Co	F-1, Clive Buildings		ditto
Cruickshank, William Patrick	Assistant, James Finlay & Co, Ld	1, Clive Street		ditto
Cullinane, W J	Assistant, Balmer, Lawrie & Co, Ld	103, Clive Street		ditto
Cullington, H S	Assistant, Andrew Yule & Co, Ld	8, Clive Row		ditto
Culloden, A W	Assistant, Arlington & Co	13-3, Old Court House Street		ditto
Cummins, Hubert James	Assistant, Bengal Chamber of Commerce	2, Clive Street		ditto
Cummusky, F H	Claims Inspecter, Jetties, Port Commissioners' Office	Strand Road		ditto
Cunningham, A J	Accountant, C A O's Office, E I R	E I R House		ditto
Cunningham, Alexander More	Assistant, Northern Assurance Co, Ld	7, Hare Street		ditto
Cunningham, James Mallowes	Assistant, Phipson & Co, Ld	1, Garstin Place		ditto
Cunnison, John Reidie	Assistant Accountant, National Bank of India, Ld	104, Clive Street		ditto

No.	Names.	Style or calling.	Residence or place of business.	Religion.
	Curlender, A ..	.. Partner, S Curlender & Co	.. 8, Old Court House Corner ..	Christian
	Curlender, D ..	.. Partner, S Curlender & Co	.. 8, Old Court House Corner ..	ditto
	Curlender, Meyer ..	.. Partner, S Curlender & Co	.. 8, Old Court House Corner ..	ditto
	Currie, A H ..	.. Assistant, W Haworth & Co	.. 1, Commercial Buildings.. ..	ditto
	Curtis, Maurice Seymour	.. Assistant, Macneill & Co	.. 2, Fairlie Place	ditto
	D			
	D'Costa, L A ..	.. Assistant, Bengal Secretariat, Political Department ..	.. Writers' Buildings	Christian
	D'Costa, N A ..	.. Clerk, Stores Department, E B R	.. 3, Kaylaghat Street	ditto
	D'Costa, P ..	.. Measurer, Bengal Chamber of Commerce ..	.. 2, Clive Street	ditto
	D'Cruz, A E ..	.. Measurer, Bengal Chamber of Commerce ..	.. 2, Clive Street	ditto
	D'Cruz, D F ..	.. Assistant, Turner, Morrison & Co, Ld	.. 6, Lyons Range	ditto
	D'Cruz, Ernest Berghman	.. Assistant Accountant, Port Commissioners' Office ..	.. Strand Road	ditto
	D'Cruz, J F ..	.. Measurer, Bengal Chamber of Commerce ..	.. 2, Clive Street	ditto
	D'Cruz, William Ernest ..	.. Assistant, Duncan Brothers & Co, Ld	.. 101, Clive Street	ditto
	D'Cruze, A ..	.. Assistant Salesman, Marshall Sons & Co (India), Ld	.. 99, Clive Street	ditto
	D'Cruze, D B ..	.. Assistant, A G's Office, Bengal	.. Treasury Buildings	ditto
	D'Cruze, D R ..	.. Clerk, Jardine Skinner & Co	.. 4, Clive Row	ditto

D'Moirah, S J ..	.. Measurer, Bengal Chamber of Commerce ..	.. 2, Clive Street ..	..	ditto
D'Paiva, Joseph Chalmer	.. Assistant, Hoare Miller & Co, Ld ..	.. .. 5, Fairlie Place ..	..	ditto
D'Rozario, D ..	.. Reader, Government of India Press ..	.. .. 8, Hastings Street ..	..	ditto
D'Rozario, Joseph ..	.. Assistant, Bengal Chamber of Commerce ..	.. 2, Clive Street ..	..	ditto
D'Rozario, S ..	.. Assistant, Lionel Edwards., Ld ..	.. .. D-1, Clive Buildings ..	..	ditto
D'Santos, Edward ..	.. Assistant, Hoare, Miller & Co, Ld ..	.. .. 5, Fairlie Place ..	..	ditto
D'Silva, C J ..	.. Measurer, Bengal Chamber of Commerce ..	.. .. 2, Clive Street ..	..	ditto
D'Silva, H C J ..	.. Measurer, Bengal Chamber of Commerce ..	.. 2, Clive Street ..	..	ditto
D'Souza, B W ..	.. Chief Clerk, Baptist Mission Press ..	.. .. 41, Lower Circular Road ..	..	ditto
D'Souza, C A ..	.. Measurer, Bengal Chamber of Commerce ..	.. .. 2, Clive Street ..	..	ditto
D'Souza, D ..	.. Assistant, Hall & Anderson, Ld ..	.. .. 31, Cnowringhee ..	..	ditto
D'Souza, Francis D ..	.. Clerk, Prudential Assurance Co, Ld ..	.. .. Clive Buildings ..	..	ditto
D'Souza, G W ..	.. Measurer, Bengal Chamber of Commerce ..	. 2, Clive Street ..	..	ditto
D'Souza, J A ..	.. Measurer, Bengal Chamber of Commerce ..	.. 2, Clive Street ..	..	ditto
D'Souza, Remigus Francis	.. Clerk, Prudential Assurance Co, Ld ..	.. .. Clive Buildings ..	..	ditto
D'Souza, Valentine Beresford	.. Assistant, T E Thomson & Co, Ld ..	.. .. 9, Esplanade, East ..	..	ditto
D'Souza, W ..	.. Assistant, Hall & Anderson, Ld ..	.. .. 31, Chowringhee ..	..	ditto
DaCosta, Edwin William	.. Head Clerk, Eagle Star and British Dominions Insurance Co, Ld	21, Strand Road ..	..	ditto

No.	Names.	Style or calling.	Residence or place of business.	Religion.
	Dakers, James Tullis	Assistant, Andrew Yule & Co, Ld	8, Clive Row	Christian
	Dalling, Robert	Canvasser, Geo Beaver & Co	87A, Clive Street	ditto
	Dalmahoy, A E	Assistant, McLeod & Co	28, Dalhousie Square	ditto
	Daniel, Walton	Clerk, C C M's Office, E I R	E I R House	ditto
	Daniell, Hector Rupert Horatio, BA, BT	Master, Elias Meyer Free School and Talmud Torah	50, Bowbazar Street	ditto
	Daniell, S	Stenographer, C M E's Office, E I R	E I R House	ditto
	Daniels, A	Mech Supervisor, Calcutta Improvement Trust	5, Clive Street	ditto
	Darbyshire, H M	Assistant, Octavius, Steel & Co, Ld	14, Old Court House Street	ditto
	Dargie, Leanus John	Assistant, Macneill & Co	2, Fairlie Place	ditto
	DaSilva, Richard Herbert	Journalist, *Statesman*, Ld	Statesman House	ditto
	Davey, G H	Measurer, Bengal Chamber of Commerce	2, Clive Street	ditto
	David, O	Assistant, Mackinnon, Mackenzie & Co	8, Strand Road	ditto
	Davidson, A H	Assistant, Kilburn & Co	4, Fairlie Place	ditto
	Davidson, Arthur Lambert	Manager (Retail Dept), Houghton-Butcher (Eastern), Ld	10, Hungerford Street	ditto
	Davidson, G S	Assistant, Hall & Anderson, Ld	31, Chowringhee	ditto
	Davidson, J E	Assistant, Balmer, Lawrie & Co, Ld	103, Clive Street	ditto
	Davie, W A	Assistant, B I S N Co, Ld	16, Strand Road	ditto
	Davies, Stanley Horace	Assistant, Duncan Brothers & Co, Ld	101, Clive Street	ditto

Davies, William Owen	Engineer, W & T Avery, Ld	11, Crooked Lane	ditto
Davis, G F	Assistant, Lipton, Ld	9, Weston Street	ditto
Davy, John Vinicombe Danvers	Assistant, Roneo, Ld	9, Clive Street	ditto
Dawson, C J	Assistant, Andrew Yule & Co, Ld	8, Clive Row	ditto
Dawson, Donald Leslie	Assistant, W T Henley's Telegraph Works Co, Ld	Old Court House Corner	ditto
Day, D S	Assistant, Lipton, Ld	9, Weston Street	ditto
Dearden, R A	Assistant, Associated British Machine Tool Makers, Ld	6, Old Post Office Street	ditto
Deas, R G	Assistant, Standard Life Assurance Co	32, Dalhousie Square	ditto
Delacour, J H	Asstt. Accountant, P & O Banking Corporation, Ltd	1, Fairlie Place	ditto
Delaplaine, A C	Assistant, Standard Vacuum Oil Co	6, Church Lane	ditto
DeLaroy, Alfred	Assistant, Francis, Harrison, Hathaway & Co, Ltd	30, Chowringhee	ditto
DeLeemans, E N	Measurer, Bengal Chamber of Commerce	2, Clive Street	ditto
DeMoss, B E	Assistant, Jessop & Co, Ld	93, Clive Street	ditto
Dench, C W	Block Signal Inspector, E I R	E I R House	ditto
Dennis, Frank	Salesman, Texas Co (India), Ltd	11, Esplanade, East	ditto
Derosaire, E R G	Measurer, Bengal Chamber of Commerce	2, Clive Street	ditto
DeSanges, Thos R	Assistant, Burn & Co, Ld	12, Mission Row	ditto
DeSouza, Gabriel	Assistant, Bird & Co	1-1, Clive Street	ditto

No.	Names.	Style or calling.	Residence or place of business.	Religion.
	Dessa, Albert	Assistant, Taylor's Gramophone Saloon	15-4, Chowringhee	Christian
	Devery, Bernard John	Assistant, Hoare Miller & Co, Ld	5, Fairlie Place	ditto
	Devine, William Norman Playford ..	Secretary, Thorne's Ld	13, Ezra Mansions	ditto
	Dewar, D P	Head Draftsman, C M E's Office, E I R	E I R House	ditto
	Dewar, George Birnie	Assistant, Andrew Yule & Co, Ld	8, Clive Row	ditto
	Dewis, Wavell Henry	Assistant, Royal Insurance Co, Ld	26 & 27, Dalhousie Square ..	ditto
	Dias, G P	Assistant, Office of the I-G of Police	Writers' Buildings	ditto
	Dias, Harold Hector	Assistant, Duncan Brothers & Co, Ld	101, Clive Street	ditto
	Diboll, R W G	Acting Manager, Sutton & Sons, Ld	35, Park Mansions	ditto
	Dick, W H A	Assistant, Lloyds Bank, Ld	101-1, Clive Street	ditto
	Dickins, L Clifford	Engineer, Paterson Engineering Co (India), Ld	2, Dalhousie Square	ditto
	Dickson, A R	Assistant, A M Mair & Co	6, Royal Exchange Place ..	ditto
	Dickson, Robert Fraser	Assistant, Ranken & Co, Ld	4, Old Court House Street ..	ditto
	Dinshawe, H W	Assistant, Hall & Anderson, Ld	31, Chowringhee	ditto
	Doak, D M	Assistant, Jessop & Co, Ld	93, Clive Street	ditto
	Dodgson, W P	Assistant, Spencer & Co, Ld	32, Chowringhee	ditto
	Dougal, W T	Sub-Accountant, Mercantile Bank of India, Ld ..	8, Clive Street	ditto

Downes, G	Assistant, Grahams Trading Co (India), Ld	6, Lyons Range	ditto
Doyne, E D	Assistant, Kilburn & Co	4, Fairlie Place	ditto
Draper, Maurice, BSO	Assistant Master, La Martiniere	11, Loudon Street	ditto
Drew, H	Vitg Superintendent, B I S N Co, Ld	16, Strand Road	ditto
Dubbin, Frederick Richard	Assistant, Walter Bushnell, Ld	21, Old Court House Street	ditto
Du Casse, A J	Assistant, Macmillan & Co, Ld	294, Bowbazar Street	ditto
Duff, J F	Assistant, W Leslie & Co	19, Chowringhee	ditto
Duguid, Robert Hutton	Accountant, Duncan Brothers & Co, Ld	101, Clive Street	ditto
Duncan, C G	Assistant, Bombay Co, Ld	19, British Indian Street	ditto
Duncan, J N	Assistant, Mackinnon, Mackenzie & Co	8, Strand Road	ditto
Duncan, P C	Assistant, Geo Henderson & Co, Ld	101-1, Clive Street	ditto
Duncan, P M	Assistant, Geo Henderson & Co, Ld	101-1, Clive Street	ditto
Duncan, R H C	Assistant, Brooke Bond (India), Ld	2, Metcalf Street	ditto
Duncan, W R J	Assistant Tea Buyer, Harrisons & Crosfield, Ld	6, Church Lane	ditto
Dunsford, Edward Henry	Assistant Engineer, Construction, C E S C, Ld	Victoria House	ditto
Dunstan, Ernest John	Journalist, *Statesman*, Ld	Statesman House	ditto
Dutton, M	Examiner of Accounts, Income-tax Office	6, Esplanade, East	ditto
Dyer, P J	Assistant, Balmer, Lawrie & Co, Ld	103, Clive Street	ditto

No.	Names.	Style or calling.	Residence or place of business.	Religion.
	Dyer, Walter Lawrence Edmund ..	Assistant, Martin and Harris, Ld	.. 17, Princep Street	Christian
	E			
	Eady, B C	Assistant, Lovelock & Lewes	.. 4, Lyons Range	Christian
	Earshman, George Purves ..	Assistant, Ranken & Co, Ld	.. 4, Old Court House Street ..	ditto
	Eastment, T	Assistant Accountant, Port Commissioners' Office ..	.. Strand Road	ditto
	Eburne, S T	Engineer, G E C (India), Ld	.. Magnet House, Chittaranjan Avenue (South).	ditto
	Echlin, Cyril Martin	Assistant, Sun Insurance Office, Ld	.. 2, Hare Street	ditto
	Edge, C S	Measurer, Bengal Chamber of Commerce ..	.. 2, Clive Street	ditto
	Edling, S	Salesman, Marshall Sons & Co (India), Ld ..	.. 99, Clive Street	ditto
	Edney, E	Assistant, Imperial Chemical Industries (India), Ld ..	.. 18, Strand Road	ditto
	Edrich, W T	Assistant, Jardine Skinner & Co	.. 4, Clive Row	ditto
	Edwin, Alfred Samuel, BA ..	Assistant, Office of the Controller of Currency ..	.. Treasury Buildings	ditto
	Einy, R D	Assistant, Lipton, Ld	.. 9, Weston Street	ditto
	Elder, J K	Assistant, Geo Henderson & Co, Ld	.. 101-1, Clive Street	ditto
	Elias, I	Foreman, Testing Department, C E S C, Ld ..	.. Victoria House	Jew
	Elkin, William James	Assistant, Marshall Sons & Co (India), Ld ..	.. 99, Clive Street	ditto
	Elkins, Anthony Joseph	Assistant, Gillanders, Arbuthnot & Co	.. 8, Clive Street	Christian

Elliot, Edmond Waren ..	.. Assistant, Kilburn & Co	.. 4, Fairlie Place	Christian
Elliott, C J ..	.. Assistant, Hall & Anderson, Ld	.. 31, Chowringhee	ditto
Elliott, Sidney Horace ..	.. Assistant Manager, The Indian School Supply Depot	.. Chittaranjan Avenue, South ..	ditto
Ellis J ..	.. Assistant, Balmer, Lawrie & Co, Ld	.. 103, Clive Street	ditto
Ellis, Leslie Seymour ..	.. Assistant, Macneill & Co	.. 2, Fairlie Place	ditto
Ellis, Marischal ..	.. Journalist, *Statesman*, Ld	.. Statesman House	ditto
Elloy, James F G, B A ..	... Assistant, Education Department, Bengal Secretariat	.. Writers' Buildings	ditto
English, I J ..	.. Assistant, Standard Vacuum Oil Co	.. 6, Church Lane	ditto
Ephraim, W ..	.. Press Reader, Baptist Mission Press	.. 41, Lower Circular Road	ditto
Esplen, James Leslie ..	.. Assistant, Normans, Ross & Co	.. 3, Clive Street	ditto
Essery, A E ..	.. Salesman, J Boseck & Co, Ld	.. 16-5, Chowringhee	ditto
Evans, E J	.. Assistant, Guest, Keen, Williams, Ld	.. 7, Council House Street ..	ditto
Evans, Percival Cadogan	.. Manager, I R G P & T W Co, Ld	.. 7, Old Court House Street ..	ditto
Evenette, Ernest William	.. Assistant, Gillanders Arbuthnot & Co. ..	.. 8, Clive Street	ditto
Evison, Leonard Denzil ..	.. Assistant, Ludlow Jute Co, Ld	.. 7, Royal Exchange Place ..	ditto
Ewing, F O ..	.. Assistant, I G N & Railway Co, Ld	.. 4, Fairlie Place	ditto
Ezekiel, D ..	.. Partner, Ezekiel & Co	.. 13, Chowringhee Lane	Jew
Ezekiel, E ..	.. Partner, Ezekiel & Co	.. 13, Chowringhee Lane	ditto

No.	Names.	Style or calling.	Residence or place of business.	Religion.
	Ezekiel, J ..	.. Partner, Ezekiel & Co	.. 13, Chowringhee Lane	Jew
	Ezra, M S ..	.. Superintendent, Central Registry, E B R ..	.. 3, Kaylaghat Street	ditto
	F			
	Faiers, G	.. Asstt Victg Superintendent, B I S N Co, Ld ..	.. 16, Starnd Road	Christian
	Farlam, Harold Erskine ..	.. Assistant, British Insulated Cables, Ld	.. 2, Waterloo Street	ditto
	Farmer, Francis Darell ..	.. Assistant, James Finlay & Co, Ld	.. 1, Clive Street	ditto
	Farmer, R A ..	.. Engineer, Mack ntosh Burn, Ld	.. 8, Clive Street	ditto
	Farrell, Dennis Joseph ..	.. Assistant, Begg, Dunlop & Co, Ld	.. 2, Hare Street	ditto
	Farrell, John Stanley ..	.. Assistant, Macneill & Co	.. 2, Fairlie Place	ditto
	Farrell, T A ..	.. Assistant, Shaw, Wallace & Co	.. 4, Bankshall Street	ditto
	Farrell, T M ..	.. Audit Inspector, Port Commissioners' Office ..	.. Strand Road	ditto
	Farrer, C E ..	.. Assistant, Standard Vacuum Oil Co	.. 6, Church Lane	ditto
	Farrow, Harold Arthur Lewis ..	Assistant, F W Heilgers & Co	.. 1-1, Clive Street	ditto
	Faulkner, John Claude ..	.. Assistant, Begg, Dunlop & Co, Ld	.. 2, Hare Street	ditto
	Fawcett, James Edward ..	Assistant, F W Heilgers & Co	.. 1-1, Clive Street	ditto
	Fellinger, Eugene Gerald ..	Artist, *Statesman*, Ld	.. Statesman House	ditto
	Fenwick, W F ..	.. Works Manager, W & T Avery, Ld	.. 11, Crooked Lane	ditto

Fernandes, Mick	Accountant, George Newnes Book Co (India), Ld	10, Clive Row	ditto
Fernandez, C P	Measurer, Bengal Chamber of Commerce	2, Clive Street	ditto
Fernandez, Joacquin Ludoireo ..	Clerk, Prudential Assuarnce Co, Ld	Clive Buildings	ditto
Fernandez, Reginald	Clerk, Ralli Bros, Ld	16, Hare Street	ditto
Ferris, Maurice	Assistant, Arnhold & Co, Ld	100, Clive Street	Jew
Ferron, Arthur Richard	Salesman, Army & Navy Stores, Ld	41, Chowringhee	Christian
Fewkes, Henry Gordon	Assistant, J B Norton & Sons, Ld	Norton Buildings	ditto
Field, C A	Assistant, J Boseck & Co, Ld	17-3, Chowringhee	ditto
Fink, L T MacRitchie, B Com (Lond)	Examiner of Accounts, Income-Tax Office	6, Esplanade, East	ditto
Finlay, Shaw	Assistant, Burn & Co, Ld	12, Mission Row	ditto
Fisher, E C	Assistant, Turner, Morrison & Co, Ld	6, Lyons Range	ditto
Fitzau, Ralph	Assistant, Max Staub, Ld	10, Clive Row	ditto
Fitzgerald, C	Assistant, W Leslie & Co	19, Chowringhee	ditto
Fitzgerald, G D	Assistant, Gladstone, Wyllie & Co	4, Fairlie Place	ditto
Fitzgerald, M A	Assistant P D O, Imperial Bank of India	8, Council House Street	ditto
Flanigan, Charles Andrew ..	Assistant, Hamilton & Co, Ld	8, Old Court House Street ..	ditto
Fleeming, H N	Claims Clerk, C C M's Office, E I R	E I R House	ditto
Fleming, L H	Assistant, Thomas Duff & Co, Ld	3, Clive Row	ditto

No.	Names.	Style or calling.	Residence or place of business.	Religion.
	Fleming, Murray	Assistant, Moran & Co, Ld	.. 4, Lyons Range	Christian
	Fleming, Robert	Assistant, J C Duffus & Co, Ld	.. 104, Clive Street	ditto
	Fletcher, Geoffrey Cyril	Stock Broker, Stewart & Co	.. 8, Clive Street	ditto
	Fleury, G W	Engineer, Calcutta Mint	.. 47, Strand Road	ditto
	Fleury, M	Assistant, Standard Vacuum Oil Co	.. 6, Church Lane	ditto
	Florence, John	Assistant District Manager, Dunlop Rubber Co (India), Ld	.. 42, Free School Street	ditto
	Flowerday, Lawrence	Assistant, Whiteaway Laidlaw & Co, Ld	.. 7, Chowringhee	ditto
	Foote, Arthur George Frank ..	Assistant, Army and Navy Stores, Ld	.. 41, Chowringhee	ditto
	Ford, E H	Assistant, Balmer, Lawrie & Co, Ld	.. 103, Clive Street	ditto
	Ford, Guy Harold	Salesman, Texas Co (India), Ld	.. 11, Esplanade, East	ditto
	Forrest, William Dick	Assistant, F W Heilgers & Co	.. 1-1, Clive Street	ditto
	Forster, Andrew Hine	Assistant, Barry & Co	.. 2, Fairlie Place	ditto
	Forster, Kenneth Wheelock Emery ..	Assistant, Commercial Union Assurance Co, Ld ..	.. 32, Dalhousie Square	ditto
	Foster, Lawrence Sinclair ..	Assistant, Place, Siddons & Gough	.. 6, Lyons Range ..	ditto
	Fox, A E	Assistant, McLeod & Co	.. 28, Dalhousie Square	ditto
	Fox, D R	Measurer, Bengal Chamber of Commerce ..	.. 2, Clive Street	ditto
	Francis, A W	Claims Inspector, E B R	.. 3, Kaylaghat Street	ditto

Francis, C ..	.. Assistant, Bengal Secretariat, Police Department ..	.. Writers' Buildings ..	..	ditto
Francis, C N ..	.. Assistant, Turner, Morrison & Co, Ld	.. 6, Lyons Range ..	..	ditto
Francis, E ..	.. Assistant, I G N & Railway Co, Ld	.. Nimtala ..	..	ditto
Francis, Vernon Clifford ..	.. Master, Elias Meyer Free School and Talmud Torah ..	.. 50, Bowbazar Street ..	..	ditto
Frankum, G C ..	.. Engineer, Calcutta Mint	.. 47, Strand Road ..	..	ditto
Fraser, A K ..	.. Assistant, Imperial Chemical Industries (India), Ld ..	.. 18, Strand Road ..	..	ditto
Fraser, D ..	.. Assistant, Don Watson & Co	.. 4, Lyons Range ..	..	ditto
Fraser, Ronald Archibald Louis	.. Assistant, Heath & Co (Calcutta), Ld	.. 60C, Chowringhee ..	..	ditto
Freeaz, Timothy D'Souza	.. Clerk, Prudential Assurance Co, Ld	.. Clive Buildings ..	..	ditto
Freestone, William ..	.. Assistant, C C Wakefield & Co, Ld	.. 7, Royal Exchange Place	..	ditto
French, Bryan Morley ..	.. Assistant, James Finlay & Co, Ld	.. 1, Clive Street ..	..	ditto
French, Collin Leslie ..	.. Assistant, F W Heilgers & Co	.. 1-1, Clive Street ..	..	ditto
Friend, C S	.. Overseer, Calcutta General Printing Co, Ld ..	.. 300, Bowbazar Street ..	..	ditto
Frith, W G C ..	.. Assistant, Gladstone, Wyllie & Co	.. 4, Fairlie Place ..	..	ditto
Frugtneit, C N ..	.. Assistant, Balmer, Lawrie & Co, Ld	.. 103, Clive Street ..	..	ditto
Fuller, Gordon Wallace ..	.. Assistant, Nestle & Anglo-Swiss Condensed Milk (Export) Co, Ld	9A, Clive Street ..	..	ditto
Furlonger, C A M ..	.. Assistant, Standard Vacuum Oil Co	.. 6, Church Lane ..	..	ditto

No.	Names.	Style or calling.	Residence or place of business.	Religion.
	G			
	Gabb, H V	Sub-Accountant, Lloyds Bank, Ld	101-1, Clive Street	Christian
	Gade, R V	Assistant, Heatly & Gresham, Ld	6, Waterloo Street	ditto
	Gainsford, A T	Assistant, Mackinnon, Mackenzie & Co	16, Strand Road	ditto
	Gale, V F	Assistant, Balmer, Lawrie & Co, Ld	103, Clive Street	ditto
	Galloway, A H	Assistant, Octavius Steel & Co, Ld	14, Old Court House Street	ditto
	Garate, Edward Ernest	Salesman, Army & Navy Stores, Ld	41, Chowringhee	ditto
	Gardiner, H St P	Assistant, Grahams Trading Co (India), Ld	6, Lyons Range	ditto
	Gardiner, W.	Assistant, McLeod & Co	28, Dalhousie Square	ditto
	Gardner, Chas	Overseer, Calcutta General Printing Co, Ld	300, Bowbazar Street	ditto
	Gardner, Gregory	Assistant, James Finlay & Co, Ld	1, Clive Street	ditto
	Gardner, H E	Assistant Accountant, P & O Banking Corporation, Ld	1, Fairlie Place	ditto
	Garnham, G E	Assistant Tea Buyer, Brooke Bond (India), Ld	2, Metcalfe Street	ditto
	Garreau, Ronald	Boiler Inspector	40-1A, Free School Street	ditto
	Gavin, Arthur Macpherson	Bolier Inspector	40-1A, Free School Street	ditto
	Gay, L J C	Assistant, Balmer, Lawrie & Co, Ld	103, Clive Street	ditto
	Gedge, H F S	Assistant, Roberts McLean & Co, Ld	101, Clive Street	ditto

Gellatly, A K	Assistant, Turner, Morrison & Co, Ld	6, Lyons Range	ditto
Gellatly, K M	Assistant, Turner, Morrison & Co, Ld	6, Lyons Range	ditto
Gemmell, Andrew	Assistant, Heatly & Gresham, Ld	6, Waterloo Street	ditto
Gent, Stuart	Retail Manager, Kodak, Ld	17, Park Street	ditto
George, B	Storekeeper, McGregor and Balfour, Ld	11, Clive Street	ditto
George, T J	Assistant, Bombay Co, Ld	19, British Indian Street	ditto
Gidley, A G	Assistant, Burn & Co, Ld	12, Mission Row	ditto
Gill, F R	Measurer, Bengal Chamber of Commerce	2, Clive Street	ditto
Gill, H S	Assistant, Lovelock & Lewes	4, Lyons Range	ditto
Gilmour, Lockart	Engineer, Chloride Electrical Storage Co, Ld	4, Lyons Range	ditto.
Ginzler, A T F	Assistant, Heatly & Gresham, Ld	6, Waterloo Street	ditto
Gladstone, John	Assistant, Gillanders, Arbuthnot & Co	8, Clive Street	ditto
Glasfurd, Gerald Fenton	Assistant, J & R Hutchison, Ld	29, Waterloo Street	ditto
Glasfurd, Harold	Head Master, St Paul's Higher Grade Mission School	13, Scott's Lane	ditto
Glenny, Lonies Roy	Desp. Manager, Army & Navy Stores, Ld	41, Chowringhee	ditto
Glover, Alfred Edwin	Assistant, Alfred Herbert (India), Ld	13-3, Strand Road	ditto
Glover, Danford	Assistant, Worthington Simpson, Ld	10, Clive Street	ditto

No.	Names.	Style or calling.	Residence or place of business.	Religion.
	Glover, T B	Inspector of Factories, Bengal	.. 40-1A, Free School Street ..	Christian
	Glynn, N C	Measurer, Bengal Chamber of Commerce ..	.. 2, Clive Street	ditto
	Godfrey, Joseph	Assistant, Muir Mills Co, Ld	.. 25, Chowringhee	ditto
	Goldrick, William B	Sub-Accountant, National City Bank of New York	.. 4, Clive Street	ditto
	Gomes, Joseph Aloysius	Assistant, Army & Navy Stores, Ld	.. 41, Chowringhee	ditto
	Gomes, J S	Assistant, Hall & Anderson, Ld	.. 31, Chowringhee	ditto
	Gomez, A	Assistant, B I S N Co, Ld	.. 13, Lindsay Street	ditto
	Gomez, B L	Assistant, Jessop & Co, Ld	.. 93, Clive Street	ditto
	Gomez, C O	Assistant, Balmer, Lawrie & Co, Ld	.. 103, Clive Street	ditto
	Gomez, John Henry	Assistant Engineer, *Statesman*, Ld	.. Statesman House	ditto
	Gomme, D E	Assistant, Octavius Steel & Co, Ld	.. 14, Old Court House Street ..	ditto
	Gonsalves, J R	Assistant, Turner, Morrison & Co, Ld	.. 6, Lyons Range	ditto
	Good, Frederick William Bower ..	Reader, *Statesman*, Ld	.. Statesman House	ditto
	Good, H F	Assistant, Grindlay & Co, Ld	.. 6, Church Lane	ditto
	Goodman, E L	Assistant, McLeod & Co	.. 28, Dalhousie Square	ditto
	Goodman, George Joseph ..	Assistant, Anderson Wright & Co	.. 22, Strand Road	ditto

Gordon, J	Engineer, Mackintosh Burn, Ld	..	..	8, Clive Street	ditto
Gordon, P H	Stenographer, Traffic Department, E B R	..	..	3, Kaylaghat Street	ditto
Goss, A	Works Manager, A Milton & Co, Ld	..	..	156, Dharamtala Street	ditto
Gough, Harry	Assistant, Cox & Kings (Agents), Ld	..	..	5, Bankshall Street	ditto
Gould, A	Head Assistant, Sun Life of Canada	..	..	12, Dalhousie Square, East	ditto
Gourlay, R A	Assistant, Jardine, Skinner & Co	..	..	4, Clive Row	ditto
Govia, M V	Foreman, Calcutta General Printing Co, Ld	..	..	300, Bowbazar Street	ditto
Graham, C V	Assistant, Jessop & Co, Ld	..	..	93, Clive Street	ditto
Graham, Joseph Faulds	Assistant, British Insulated Cables, Ld	..	..	2, Waterloo Street	ditto
Graham, Osmond Joseph	Reader, Caledonian Printing Co, Ld	..	..	3, Wellesley Place	ditto
Grange, Aubrey Cecil Malcolm	Salesman, Kalamazoo (Sales), Ld	..	..	4, Fairlie Place	ditto
Grant, C W	Assistant, I G N & Ry Co, Ld	..	..	4, Fairlie Place	ditto
Grant, David Taylor	Sub-Accountant, Eastern Bank, Ld	..	..	9, Clive Street	ditto
Grant, E	Assistant, Jessop & Co, Ld	..	..	93, Clive Street	ditto
Granville, Harry Norman	Assistant, New Zealand Insurance Co, Ld	..	..	26, Dalhousie Square	ditto
Graves, A J	Assistant, Allen and Hanburys, Ld	..	..	C-3, Clive Buildings	ditto
Gray, F C	Assistant, Turner, Morrison & Co, Ld	..	..	6, Lyons Range	ditto

No.	Names.	Style or calling.	Residence or place of business.	Religion.
	Gray, J M	.. Assistant, Grahams Trading Co (India), Ld ..	.. 6, Lyons Range	Christian
	Greaves, Jack ..	.. Salesman, Walford Transport, Ld	.. 71-73, Park Street	ditto
	Green, S ..	.. Assistant, G E C (India), Ld	.. Magnet House, Chittaranjan Avenue (South).	ditto
	Greene, W R ..	.. Assistant, Jardine, Skinner & Co	.. 4, Clive Row	ditto
	Gregory, George William	.. Assistant, Hoare Miller & Co, Ld	.. 5, Fairlie Place	ditto
	Grey, F H ..	.. Measurer, Bengal Chamber of Commerce	.. 2, Clive Street	ditto
	Grieve, A C ..	.. Assistant, Jardine Skinner & Co	.. 4, Clive Row	ditto
	Grimpel, B H ..	.. Assistant, Cox & Kings (Agents), Ld	.. 5, Bankshall Street	ditto
	Grover, G H ..	.. Assistant, Imperial Chemical Industries (India), Ld ..	.. 18, Strand Road	ditto
	Growcott, D R ..	.. Assistant, Shaw, Wallace & Co	.. 4, Bankshall Street	ditto
	Gueizelar, Oliver Osmond	.. Chief Contract Clerk, Bengal Telephone Corporation, Ld	.. 8, Hare Street	ditto
	Gunnis, T G ..	.. Assistant, Balmer, Lawrie & Co, Ld	.. 103, Clive Street	ditto
	Guy, Ernest Harold ..	.. Assistant, Planters' Stores and Agency Co, Ld ..	.. 11, Clive Street	ditto
	Guynan, Herbert William	.. Assistant, T E Thomson & Co, Ld	.. 9, Esplanade, East	ditto
	Guzman, L A ..	.. Assistant, Hall & Anderson, Ld	.. 31, Chowringhee	ditto

Haddon, Davies Allen	Assistant Secretary, Imperial Tobacco Co of India, Ld ..	37, Chowringhee	Christian.
Haddow, R	Assistant, Shaw, Wallace & Co	4, Bankshall Street	ditto
Hadlow, B D	Assistant, Turner, Morrison & Co, Ld	6, Lyons Range	ditto
Hall, L Fuller	Assistant, Octavius Steel & Co, Ld	14, Old Court House Street ..	ditto
Hall, Norman Robert	Engineer, Martin & Co	12, Mission Row	ditto
Hall, S G	Sub-Accountant, Lloyds Bank, Ld	101-1, Clive Street	ditto
Hall, W R	Assistant, Standard Vacuum Oil Co	6, Church Lane	ditto
Halpin, J E	Office Superintendent, Port Commissioners' Office	Strand Road	ditto
Hamilton, Robert Mackay ..	Assistant, A & G Main & Co, Ld	10, Clive Street	ditto
Hand, T	Permanent Way Superintendent, Calcutta Tramways Co, Ld ..	7, Church Lane	ditto
Handley, E T	Engineer, G E C (India), Ld	Magnet House, Chittaranjan Avenue (South).	ditto
Hanford, Sidney	Assistant, Harnack & Co	10, Old Court House Street ..	ditto
Hanley, Patrick William ..	Assistant, Cooke and Kelvey	20, Old Court House Street ..	ditto
Hanlon, J V	Assistant, Standard Vacuum Oil Co	6, Church Lane	ditto
Hannah, Donald Victor	Boiler Inspector	40-1A, Free School Street ..	ditto
Hannah, R L	Assistant, Calcutta Tramways Co, Ld	7, Church Lane	ditto
Hannay, J M	Dy Cargo Superintendent, B I S N Co, Ld	8, Strand Road	ditto

No.	Names.	Style or calling.	Residence or place of business.	Religion.
	Hanson, H N	Measurer, Bengal Chamber of Commerce	2, Clive Street	Christian
	Hanson, Oliver	Assistant, Samuel Fitze & Co, Ld	26, Chowringhee	ditto
	Hardaker, John	Journalist, *Statesman*, Ld	Statesman House	ditto
	Harding, B A	Assistant, Breakwell & Co	44, Free School Street	ditto
	Hardinge, Roderic Melwood ..	Assistant, F W Heilgers & Co	1-1, Clive Street	ditto
	Hardless, Cedric	Assistant, Ralli Bros, Ld	16, Hare Street	ditto
	Hardless, W	Assistant, Hall & Anderson, Ld	31, Chowringhee	ditto
	Hards, Richard Leo	Assistant, Begg, Dunlop & Co, Ld	2, Hare Street	ditto
	Hare, E W	Sub-Accountant, Chartered Bank of India, Australia and China	1-1, Clive Street	ditto
	Harley, Donald Stuart	Assistant Manager, Union Insurance Society of Canton, Ld ..	8, Clive Street	ditto
	Harper, E	Superintendent of Stores, Sutton & Sons, Ld	35, Park Mansions	ditto
	Harrer, A R	Assistant Secretary to Agent, E I R	E I R House	ditto
	Harrington, William Maurice ..	Sub-Editor, " Star of India "	9, Dharamtala Street	ditto
	Hart, Charles Alfred	Engineer, Imperial Tobacco Co of India, Ld	37, Chowringhee	ditto
	Hartley, F M	Assistant, Andrew, Yule & Co, Ld	8, Clive Row	ditto
	Hartley, J H	Assistant, Price, Waterhouse, Peat & Co	B-4, Clive Buildings	ditto
	Harvey, Ernest William	Assistant, Ludlow Jute Co, Ld	7, Royal Exchange Place ..	ditto

Haslam, P	.. Assistant, Hall & Anderson , Ld	.. 31, Chowringhee	ditto
Haward, Ernest ..	.. Assistant, Worthington, Simpson, Ld	.. 10, Clive Street	ditto
Hawkings, R J ..	.. Assistant, G E C (India), Ld	.. Magnet House, Chittaranjan Avenue (South).	ditto
Hawkins, R E ..	.. Assistant, Gladstone Wyllie & Co	.. 4, Fairlie Place	ditto
Hay, William ..	.. Engineer, Mackintosh Burn, Ld	.. 8, Clive Street	ditto
Haydn, George Herbert ..	.. Salesman, Texas Co (India), Ld	.. 11, Esplanade, East	ditto
Hayes, Richard Thomas ..	.. Timekeeper, Bengal Telephine Corporation, Ld ..	.. 1-2, Chittaranjan Avenue ..	ditto
Hayman, R D ..	.. Assistant, Mackinnon Mackenzie & Co	.. 16, Strand Road	ditto
Haynes, S T ..	.. Assistant, Phœnix Assurance Co, Ld	.. 28, Dalhousie Square	ditto
Head, George ..	.. Photographer, *Statesman*, Ld	.. Statesman House	ditto
Hechle, J R ..	.. Assistant, Thomas Walker & Co	.. 6, Royal Exchange Place ..	ditto
Hedley, Brian Ernest ..	.. Sales Engineer, Standard Telephones & Cables, Ld ..	.. C-2, Clive Buildings	ditto
Heelis, Richard ..	.. Assistant, Andrew, Yule & Co, Ld	.. 8, Clive Row	ditto
Hefferan, Albert Edward ..	.. Assistant, Ralli Bros, Ld	.. 16, Hare Street	ditto
Hellen, C D E ..	.. Assistant, Don Watson & Co	.. 4, Lyons Range	ditto
Hemming, Charles Capper	.. Assistant, Alliance Assurance Co, Ld	.. 2, Hare Street	ditto
Hendrie, W	.. Sub-Accountant, Chartered Bank of India, Australia and China	1-1, Clive Street	ditto

No.	Names.	Style or calling.	Residence or place of business.	Religion.
	Hendry, G V	Assistant, Grahams Trading Co (India), Ld	6, Lyons Range	Christian
	Henfrey, J B F	Asstt Superintendent, Licensed Measurers Department	2, Clive Street	ditto
	Henshaw, David	Assistant, Walter Bushnell, Ld	21, Old Court House Street	ditto
	Henwood, George Pearson	Assistant, Ralli Bros, Ld	16, Hare Street	ditto
	Herbert, N G	Assistant,, Imperial Chemical Industries (India), Ld	18, Strand Road	ditto
	Herbert, V H O	Assistant, Balmer, Lawrie & Co, Ld	103, Clive Street	ditto
	Heriot, G I M	Assistant, J Thomas & Co	8, Mission Row	ditto
	Hetherington, Henry Alfred	Assistant Engineer, Scott & Saxby, Ld	19, British Indian Street	ditto
	Hewlett, A G E	Assistant, Plummer Bros & Co	5 & 6, Fancy Lane	ditto
	Heysham, George Clifford Berkeley	Assistant, Ralli Bros, Ld	16, Hare Street	ditto
	Hezmalhatch, Alfred	Assistant, Andrew, Yule & Co, Ld	8, Clive Row	ditto
	Hickman, T	Assistant, Kilburn & Co	4 Fairlie Place	ditto
	Hickman, W	Inspector, C E S C, Ld	Victoria House	ditto
	Hickmott, Reginald Ernest Joseph	Assistant, Hoare Miller & Co, Ld	5, Fairlie Place	ditto
	High, J W	Assistant, Jessop & Co, Ld	93, Clive Street	ditto
	Hill, C Rowland	Proprietor, General Export Co	55-58, Ezra Street	ditto
	Hill, F W	Assistant, Andrew, Yule & Co, Ld	8, Clive Row	ditto

Hillary, A	Lino Operator, Govt of India Press	8, Hastings Street	ditto
Hillier, Victor Florian	Assistant, Davenport & Co, Ld	6, Church Lane	ditto
Hillman, G K	Assistant, Standard Vacuum Oil Co	6, Church Lane	ditto
Hinton, W W	Assistant, Jardine, Skinner & Co	4, Clive Row	ditto
Hippolite, D A	Measurer, Bengal Chamber of Commerce	2, Clive Street	ditto
Hippolite, Eric James	Assistant, Blackwood, Blackwood & Co	4, Lyons Range	ditto
Hipwood, C M	Assistant, Mackinnon, Mackenzie & Co	16, Strand Road	ditto
Hirtzel, Michael Arthur Frederick	Assistant, Macneill & Co	2, Fairlie Place	ditto
Hobson, Charles William	Assistant, Bengal Chamber of Commerce	2, Clive Street	ditto
Hockley, C	Assistant, McLeod & Co	28, Dalhousie Square	ditto
Hodges, Ernest William	Assistant, Army & Navy Stores, Ld	41, Chowringhee	ditto
Hodges, Fredrick Septimus	Superintendent, Port Office, Calcutta	15-1, Strand Road	ditto
Hodges, G H	Assistant, Kettlewell, Bullen & Co, Ld	21, Strand Road	ditto
Hodgkinson, H	Assistant, Jessop & Co, Ld	93, Clive Street	ditto
Hodkinson, J	Assistant, Roberts MacLean & Co, Ld	101, Clive Street	ditto
Hogan, William Aloysus	Assistant, Bird & Co	1-1, Clive Street	ditto
Hoggan, D C J	Draftsman, C M E's Office, E I R	E I R House	ditto
Holbrook, Charles Noel	Boiler Inspector	40-1A, Free School Street	ditto

No.	Names.	Style or calling.	Residence or place of business.	Religion.
	Holgneth, A B	Clerk, C C M's Office, E I R	E I R House	Christian
	Hollands, John A	Assistant, Lionel Edwards, Ld	D-1, Clive Buildings	ditto
	Hollingberry, W A T	Assistant, I G N & Ry Co, Ld	4, Fairlie Place	ditto
	Hollis, A W	Assistant, Birla Brothers, Ld	8, Royal Exchange Place	ditto
	Holmes, A C	Sub-Accountant, Lloyds Bank, Ld	101-1, Clive Street	ditto
	Honeywell, Charles	Assistant, Bird & Co	1-1, Clive Street	ditto
	Hook, Gerald Joseph	Assistant, Anderson, Wright & Co	22, Strand Road	ditto
	Hooper, Stanley George	Assistant, Martin & Co	12, Mission Row	ditto
	Hoover, Robert	Assistant, Texas Co (India), Ld	11, Esplanade, East	ditto
	Hopkins, N D	Assistant, Brooke Bond (India), Ld	2, Metcalfe Street	ditto
	Horn, Loftus Percy	Assistant, Bird & Co	1-1, Clive Street	ditto
	Hornsey, Fredrick	Assistant, Martin & Co	12, Mission Row	ditto
	Horton, W H F K	Assistant, Imperial Chemical Industries (India), Ld	18, Strand Road	ditto
	Hossack, John	Assistant, Harman & Co, Ld	11, Government Place	ditto
	Howe, William Fraser	Assistant, Bird & Co	1-1, Clive Street	ditto
	Howie, Alexander	Assistant, John King & Co, Ld	14, Suddar Street	ditto
	Howie, S Nimmo	Assistant, Hamilton & Co, Ld	8, Old Court House Street	ditto

Hoyle, C G	Engineer, Calcutta Mint	47, Stran l Road	ditto
Huck, John	Assistant, Lyall Marshall & Co	4, Fairlie Place	ditto
Hughes, H G	Assistant, Burn & Co, Ld	12, Mission Row	ditto
Hughes, J R	Assistant, Imperial Chemical Industries (India), Ld	18, Strand Road	ditto
Hume, A H	Assistant, Turner, Morrison & Co, Ld	6, Lyons Range	ditto
Hummer, James R	Sub-Accountant, National City Bank of New York	4, Clive Street	ditto
Humphrey C M	Associated Electrical Industries (India), Ld	A-3, Clive Buildings	ditto
Humphrey, W R	Dy Superintendent, I G N & Ry Co, Ld	4, Fairlie Place	ditto
Humphrys, Arthur Sankey	Assistant, *Statesman*, Ld	Statesman House	ditto
Hunt, A	Assistant, Balmer, Lawrie & Co, Ld	103, Clive Street	ditto
Hunt, Laurence Percival	Assistant, Imperial Tobacco Co of India, Ld	37, Chowringhee	ditto
Hunter, George William	Assistant, Imperial Tobacco Co of India, Ld	37, Chowringhee	ditto
Hunter-Arundell, W F	Assistant, Jardine, Skinner & Co	4, Clive Row	ditto
Hurst, Frederic Alexander	Photographer, *Statesman*, Ld	Statesman House	ditto
Hurst, W H	Assistant, Shaw, Wallace & Co	4, Bankshall Street	ditto
Hutcheon, William	Salesman, Marshall Sons & Co (India) Ld	99, Clive Street	ditto
Hutchison, C G	Assistant, Balmer, Lawrie & Co Ld	103, Clive Street	ditto

No.	Names.	Style or calling.	Residence or place of business.	Religion.
	Hutchison, Edward Arthur	Assistant, James, Finlay & Co, Ld	1, Clive Street	Christian
	Hutton, G M	Sub-Accountant, Chartered Bank of India, Australia and China	1-1, Clive Street	ditto
	Huyshe, A E	Assistant, Kilburn & Co	4, Fairlie Place	ditto
	I			
	Inglis, Norman Lionel	Head Assistant, European Association	17, Stephen Court, Park Street	Christian
	J			
	Jackson, D	Assistant, I G N & Ry Co, Ld	4, Fairlie Place	Christian
	Jackson, Henry Kenneth	Assistant, Prudential Assurance Co, Ld	Clive Buildings	ditto
	Jacob, D M	Assistant, Turner, Morrison & Co, Ld	6, Lyons Range	ditto
	Jacob, J E	Salesman, Remington Rand, Inc	3, Council House Street	Jew
	Jacob, Samuel Joseph	Assistant, Sinclair, Murray & Co, Ld	6, Royal Exchange Place	ditto
	Jacques, William Alan Innes	Assistant, Alliance Insurance Co, Ld	2, Hare Street	Christian
	Jacques, W H	Assistant, J Thomas & Co	8, Mission Row	ditto
	Jahans, Norman Bernard	Assistant, Alfred Herbert (India), Ld	13-3, Strand Road	ditto
	James, A A	Stenographer, W H Brady & Co, Ld	26, Strand Road	ditto
	James, Alan Sherman	Assistant, Hoare, Miller & Co, Ld	5, Fairlie Place	ditto
	Jamison, C G	Assistant, Mackinnon, Mackenzie & Co	8, Strand Road	ditto

Jamieson, John Hutton ..	.. Assistant, James, Finlay & Co, Ld ..	..	.. 1, Clive Street ..	.. ditto
Jardine, Arthur ..	.. Assistant, Martin & Co ..	..	.. 12, Mission Row ..	.. ditto
Jarvis, Cecil John Edmund	.. Assistant, Royal Exchange Assurance ..	..	.. 1 & 2, Old Court House Corner	.. ditto
Jary, Basil McLean ..	.. Engineer, W Billinton & Co, Ld ..	..	.. Mercantile Buildings ..	.. ditto
Jeff, R ..	.. Assistant, McLeod & Co ..	..	.. 28, Dalhousie Square ..	.. ditto
Jenkins, O T ..	.. Assistant, Balmer, Lawrie & Co, Ld ..	..	.. 103, Clive Street ..	.. ditto
Jennings, Denzil Norman	.. Assistant, F W Heilgers & Co ..	..	.. 1-1, Clive Street ..	.. ditto
Jennis, Thomas ..	.. Storekeeper, Texas Co (India), Ld ..	..	.. 11, Esplanade, East ..	.. ditto
Jervis, E J ..	.. Assistant, Lloyds Bank, Ld ..	..	.. 101-1, Clive Street ..	.. ditto
John, C M	.. Clerk, C R E's Office, P & A District ..	..	.. Fort William ..	.. ditto
John, Samuel Henry ..	.. Timekeeper, Bengal Telephone Corpn, Ld	..	.. 8, Hare Street ..	.. ditto
Johnson, C W ..	.. Assistant, Babcock & Wilcox, Ld ..	..	.. 4, Bankshall Street ..	.. ditto
Johnson, Patrick Ernest Osmond	.. Assistant, D L Millar & Co, Ld ..	..	.. 28, Dalhousie Square, West	.. ditto
Johnson, R	.. Assistant, Balmer, Lawrie & Co, Ld ..	..	.. 103, Clive Street	.. ditto.
Johnson, S H ..	.. Assistant, H D Cartwright & Co ..	..	.. 8, Clive Street ..	.. ditto
Johnston, C E ..	.. Reader, *Statesman*, Ld	..	.. Statesman House ..	.. ditto
Jones, A C ..	.. Assistant, Perman & Hynd ..	..	.. 9, Clive Street ..	.. ditto

No.	Names.	Style or calling.	Residence or place of business.	Religion.
	Jones, Basil Alfred	Salesman, Greaves Cotton & Co, Ld	60, Dharamtala Street	Christian
	Jones, B S	Engineer, Calcutta Mint	47, Strand Road	ditto
	Jones, J R	Assistant, Standard Vacuum Oil Co	6, Church Lane	ditto
	Jones, Merlin	Assistant Curator, Government Gardens	Eden Gardens	ditto
	Jones, Norman Clarence Henry	Sotrekeeper, Chloride Electrical Storage Co, Ld	4, Lyons Range	ditto
	Jones, N S	Engineer, Calcutta Mint	47, Strand Road	ditto
	Jones, P S	Chief Assistant, C O S Office, E I R	E. I. R. House	ditto
	Jones, S Lees	Assistant, Price, Waterhouse, Peat & Co	B-4, Clive Buildings	ditto
	Jones, Stevenson Wilson	Assistant, Macneill & Co	2, Fairlie Place	ditto
	Jones, W A	Assistant, H Hobbs & Co, Ld	9, Old Court House Street	ditto
	Jore, G C	Assistant, A G's Office, Bengal	Treasury Buildings	ditto
	Joseph E M	Assistant, Grahams Trading Co (India), Ld	6, Lyons Range	ditto
	Joshua, Jack Harry	Assistant, Planters' Stores & Agency Co, Ld	11, Clive Street	ditto
	Junior, Thomas	Assistant, T E Thomson & Co, Ld	9, Esplanade, East	ditto
	Just. A H	Assistant, Price, Waterhouse, Peat & Co	B-4, Clive Buildings	ditto

K

Kane, H W G	Assistant, Guest, Keen, Williams, Ld	7, Council House Street	Christian
Keiller, Douglas	Salvage Assessor, Sinclair, Murray & Co, Ld	6, Royal Exchange Place	ditto
Kember, E W	Assistant Tea Buyer, Brooke Bond (India), Ld	2, Metcalfe Street	ditto
Kenderdine, E R	Assistant, Kettlewell, Bullen & Co, Ld	21, Strand Road	ditto
Kendrew, N A	Assistant, Jardine, Skinner & Co	4, Clive Row	ditto
Kennedy, I G	Assistant, Jardine, Skinner & Co	4, Clive Row,	ditto
Kewley, C	Assistant, Price, Waterhouse, Peat & Co	B-4, Clive Buildlngs	ditto
Kidd, F H	Assistant, Thomas Duff & Co, Ld	3, Clive Row	ditto
Kidd, George Maxwell	Assistant, Bird & Co	1-1, Clive Street	ditto
Kiernander, Oscar Leslie	Assistant, Great Eastern Hotel, Ld	1, 2 & 3, Old Court House Street	ditto
Kilgour, Andrew McBlain	Assistant, Ranken & Co, Ld	4, Old Court House Street	ditto
King, D H	Measurer, Bengal Chamber of Commerce	2, Clive Street	ditto
King, K F	Assistant, Mather & Platt, Ld	7, Hare Street	ditto
Kirkland, J H	Assistant, Jardine, Skinner & Co	4, Clive Row	ditto
Kolb, E H	Assistant, Standard Vacuum Oil Co	6, Church Lane	ditto

L

Lacey, Marten	Assistant, *Statesman*, Ld	Statesman House	Christian
Lacey, W C	Manager, Sitalprasad Kharagprasad	31, Burtolla Street	ditto

No.	Names.	Style or calling.	Residence or place of business.	Religion.
	Laidlaw, W B G	Assistant, Mackinnon, Mackenzie & Co	16, Strand Road	Christian
	Lancaster, C E A	Assistant, Steuart & Co, Ld	57, Park Street	ditto
	Lane, J H	Assistant, Jessop & Co, Ld	93, Clive Street	ditto
	Lane, Leopold Edgar	Assistant, *Statesman*, Ld	Statesman House	ditto
	Lane, Vivian Broughton	Assistant, Standard Vacuum Oil Co	6, Church Lane	ditto
	Lane, Walter Edward	Assistant, Scott & Saxby, Ld	19, British Indian Street	ditto
	Lang, Tyrell B	Assistant, London & Lancashire Insurance Co, Ld	2, Fairlie Place	ditto
	Langlois, J	Superintendent, Coll Dept, Remington Rand Inc	3, Council House Street	ditto
	Langton, John	Assistant, Ralli Brothers, Ld	16, Hare Street	ditto
	Lanyado, Yeddie	Assistant, Arnhold & Co, Ld	100, Clive Street	Jew
	Larkin, R S	Assistant, Mackinnon, Mackenzie & Co	16, Strand Road	Christian
	Larkins, W J	Measurer, Bengal Chamber of Commerce	2, Clive Street	ditto
	LaRoche, W	Assistant, Spencer & Co, Ld	32, Chowringhee	ditto
	Last, R C	Assistant, I G N & Ry Co, Ld	4, Fairlie Place	ditto
	LaTouche, C P	Measurer, Bengal Chamber of Commerce	2, Clive Street	ditto
	Laver, L J A	Assistant, Accounts Department, Imperial Bank of India	Strand Road	ditto
	Law, Richard	Assistant Master, St. Paul's Higher Grade Mission School	13, Scott's Lane	ditto

Lawie, G D	Sub-Accountant, Chartered Bank of India, Australia and China	1-1, Clive Street	..	ditto
Lawrence, H	Assistant, Brooke Bond (India), Ld	2, Metcalfe Street	..	ditto
Lawrence, J A	Import Clerk, Mackinnon, Mackenzie & Co	8, Strand Road	..	ditto
Lawrence, Sidney Arthur	Reader, *Statesman*, Ld	Statesman House	..	ditto
Lawrenson, Robert Sinclair	Boiler Inspector	40-1A, Free School Street	..	ditto
Leavens, D	Assistant, Macmillan & Co, Ld	294, Bowbazar Street	..	ditto
LeBlond, Leopold Vivian	Assistant, Army & Navy Stores, Ld	41, Chowringhee	..	ditto
Lee, William Alfred John	Assistant, Army & Navy Stores, Ld	41, Chowringhee	..	ditto
LeFaucheur, Robert	Assistant, North British & Mercantile Insurance Co, Ld	101-1, Clive Street	..	ditto
Leefe, George Noel	Assistant, Hamilton & Co, Ld	8, Old Court House Street	..	ditto
Leeming, Alfred John	Assistant, Shaw, Wallace & Co	4, Bankshall Street	..	ditto
Lees, J	Assistant, J Thomas & Co	8, Mission Row	..	ditto
Lefeuvre, S J	Measurer, Bengal Chamber of Commerce	2, Clive Street	..	ditto
Le Franc, E H	Assistant, Harrisons & Crosfield, Ld	6, Church Lane	..	ditto
Leibenhals, C	Assistant, Hall & Anderson, Ld	31, Chowringhee	..	ditto
Leicester, G F	Measurer, Bengal Chamber of Commerce	2, Clive Street	..	ditto
Leng, Leonard John	Assistant, W T Henley's Telegraph Works Co, Ld	Old Court House Corner	..	ditto
Lennett, F I Gordon	Superintendent, Landing & Shipping, B I S N Co, Ld	9, Jetty	..	ditto

No.	Names.	Style or calling.	Residence or place of business.	Religion.
	Leonard, C P	Assistant, Standard Vacuum Oil Co	6, Church Lane	Christian
	Le Patourel, Barry, BA	Assistant Master, La Martinière	11, Loudon Street	ditto
	Lepies, L	Store-keeper, G E C (India), Ld	Magnet House, Central Avenue ..	ditto
	Leslie, William, MA	Assistant, Duncan Bros & Co, Ld	101, Clive Street	ditto
	Leslie-Hall, J	Measurer, Bengal Chamber of Commerce	2, Clive Street	ditto
	Lett, St John	Assistant, Employers' Liability Assurance Corporation, Ld ..	9, Clive Street	ditto
	Levi, Victor, BSC	Examiner of Accounts, Income-tax Office	6, Esplanade, East	ditto
	Lewis, Alfred	Assistant Engineer, *Statesman*, Ld	Statesman House	ditto
	Lewis, B E	Assistant, Grahams Trading Co (India), Ld	6, Lyons Range	ditto
	Lewis, Frank Vincent	Assistant, Martin & Co	12, Mission Row	ditto
	Lewis, Haywood Joseph	Assistant, Royal Calcutta Turf Club	11, Russell Street	ditto
	Lewis, M	Steno-typist, Traffic Department, E B R	3, Kaylaghat Street	ditto
	Lewis, Mark	Assistant, Spencer & Co, Ld	32, Chowringhee	ditto
	Lewis, Victor Andrew	Assistant, Blackwood Blackwood & Co	4, Lyons Range	ditto
	Lidderdale, Eric	Assistant, Bird & Co	1-1, Clive Street	ditto
	Liddle, J W	Assistant, J Tohmas & Co	8, Mission Row	ditto
	Ling, Samuel	Assistant, Bird & Co	1-1, Clive Street	ditto

Linton, Harold Ashley	Assistant, Cooke & Kelvey	20, Old Court House Street	ditto
Littlewood, H S	Invoice Clerk, George Henderson & Co, Ld	101-1, Clive Street	ditto
Livermore, R	Assistant, J Thomas & Co	8, Mission Row	ditto
Lloyd, A C	Assistant, Barry & Co	2, Fairlie Place	ditto
Lloyd-Bennett, Norman	Salesman, Texas Co (India), Ld	11, Esplande, East	ditto
Lobo, Joaquim Xavier	Stenographer. *Statesman*, Ld	Statesman House	ditto
Lobo, Julian Alfred	Clerk, Prudential Assurance Co, Ld	Clive Buildings	ditto
Lobo, Rumaldo Justinian	Stenographer, *Statesman*, Ld	Statesman House	ditto
Lochore, Ian Duncan	Assistant Transport Officer (R S N), Macneill & Co	2, Fairlie Place	ditto
Locke, E A	Assistant, Lipton, Ld	9, Weston Street	ditto
Locke, W	Store-keeper, Heatley & Gresham, Ld	6, Waterloo Street	ditto
Lockhart, A R E	Assistant, Gladstone, Wyllie & Co	4, Fairlie Place	ditto
Lodrick, L W	Measurer, Bengal Chamber of Commerce	2, Clive Street	ditto
Lofts, W	Assistant, Shaw, Wallace & Co	4, Bankshall Street	ditto
Long, A D	Assistant, I G N & Ry Co, Ld	4, Fairlie Place	ditto
Long, A L V	Assistant, Babcock & Wilcox, Ld	4, Bankshall Street	ditto
Lord, J	Assistant, Hall & Anderson, Ld	31, Chowringhee	ditto
Lovering, Arthur James	Assistant, Lyall Marshall & Co	4, Fairlie Place	ditto

No.	Names.	Style or calling.	Residence or place of business.	Religion.
	Lovett, S C	Reader, Govt. of India Press	8, Hastings Street	Christian
	Lowe, G C	Assistant, Burn & Co, Ld	12, Mission Row	ditto
	Lowndes, M W	Assistant, Bombay Co, Ld	19, British Indian Street	ditto
	Lucas, T R	Assistant, R V Briggs, Ld	8-B, Lall Bazar Street	ditto
	Lugg, O W	Assistant, Bird & Co	1-1, Clive Street	ditto
	Lumb, G J	Assistant, Roberts McLean & Co, Ld	101, Clive Street	ditto
	Lumsden, John Gordon Babington	Assistant, Hoare Miller & Co, Ld	5, Fairlie Place	ditto
	Lumsden, William	Engineer, Paterson Engineering Co (India), Ld	2, Dalhousie Square	ditto
	Lush, Gerald Harding	Assistant, Gillanders, Arbuthnot & Co	8, Clive Street	ditto
	Lyall, R H S	Assistant, Poppe Delius & Co	2 & 3, Clive Row	ditto
	Lyle, John Young	Assistant, John King & Co, Ld	8, Loudon Street	ditto
	Lynch, D F	Assistant, Jessop & Co, Ld	93, Clive Street	ditto
	M			
	MacEwan, Walter Thompson	Assistant, Sinclair Murray & Co, Ld	6, Royal Exchange Place	Christian
	MacEwen, David James	Assistant, Central Agency, Ld	Norton Buildings	ditto
	Macey, T H	Measurer, Bengal Chamber of Commerce	2, Clive Street	ditto
	MacFarlane, A F	Assistant, Jardine, Skinner & Co	4, Clive Row	ditto

MacFarlane, W	Assistant, Mackinnon, Mackenzie & Co	8, Strand Road	ditto
MacGregor, D D	Sub-Accountant, Chartered Bank of India, Australia and China	1-1, Clive Street	ditto
MacGregor, D R	Assistant, Innes Watson & Co	15, Clive Row	ditto
MacInnes, Ronald Grant	Assistant, Place, Siddons & Gough	6, Lyons Range	ditto
Mack, David White	Assistant Accountant, National Bank of India, Ld	104, Clive Street	ditto
Mackay, F A	Assistant, W Leslie & Co	19, Chowringhee	ditto
Mackay, S	6th Passing Officer, Imperial Bank of India	Strand Road	ditto
Mackenzie, A	Assistant, Balmer, Lawrie & Co, Ld	103, Clive Street	ditto
Mackenzie, K A	Assistant, Jardine, Skinner & Co	4, Clive Row	ditto
Mackie, J S	Architect, Mackintosh Burn, Ld	8, Clive Street	ditto
Mackinlay, G M	Assistant, Jardine, Skinner & Co	4, Clive Row	ditto
Mackinnon, A	Assistant, Mackinnon, Mackenzie & Co	16, Strand Road	ditto
Macklin, Cecil Henry	Assistant, Spencer & Co, Ld	32, Chowringhee	ditto
Maclaren, Malise Julian	Assistant, Allahabad Bank, Ld	6, Royal Exchange Place	ditto
Maclauchlan, Colin Sinclair	Assistant, Davenport & Co, Ld	6, Church Lane	ditto
Maclean, A	Assistant Accountant, P & O Banking Corporation, Ld	1, Fairlie Place	ditto
Maclean, Colin	Assistant Manager, Union Insurance Society of Canton, Ld	8, Clive Street	ditto
Maclennan, George Hope	Assistant, James Finlay & Co, Ld	1, Clive Street	ditto

No.	Names.	Style or calling.	Residence or place of business.	Religion.
	Maclure, James Wyper ..	.. Assistant, Hoare Miller & Co, Ld	.. 5, Fairlie Place	.. Christian
	Macmillan, W ..	.. Assistant, Babcock & Wilcox, Ld	.. 4, Bankshall Street	ditto
	Macpherson, Donald Hugh	.. Assistant, Place, Siddons & Gough	.. 6, Lyons Range	ditto
	Maddocks, S W ..	.. Measurer, Bengal Chamber of Commerce	.. 2, Clive Street	ditto
	Madge, D C ..	.. Measurer, Bengal Chamber of Commerce	.. 2, Clive Street	ditto
	Madge, William Clarence	.. Assistant, Cooke & Kelvey	.. 20, Old Court House Street ..	ditto
	Mahar, Fredrick W ..	.. Assistant, Alfred Herbert (India), Ld	.. 13-3, Strand Road	ditto
	Maidment, Henry St Clair	.. Journalist, *Statesman*, Ld	.. Statesman House	ditto
	Maitland, Oswald Cyril ..	.. Assisstant, Ralli Bros, Ld	.. 16, Hare Street	ditto
	Males, Arthur Joseph ..	.. Assistant, Prudential Assurance Co, Ld	.. Clive Buildings	ditto
	Manasseh, Alex ..	.. Assistant, Moran & Co, Ld	.. 4, Lyons Range	Jew
	Manasseh, Ezekiel ..	.. Assistant, Blacker & Co	.. 2, Clive Street	ditto
	Mandle, Nathaniel ..	.. Reader, *Statesman*, Ld	.. Statesman House	Christian
	Mann, Patrick Wilmot, BA	.. Assistant, Bengal Secretariat, Political Department ..	.. Writers' Buildings	ditto
	Mann, V N ..	.. Measurer, Bengal Chamber of Commerce	.. 2, Clive Street	ditto
	Manning, J E ..	.. Sub-Accountant, Lloyds Bank, Ld	.. 101-1, Clive Street	ditto

Manuel, R H	1st Assistant, P D O, Imperial Bank of India	8, Council House Street	ditto
Manuk, Malcolm John	Assistant, Ralli Bros, Ld	16, Hare Street	ditto
Marcelline, Edwin Carlow ..	Assistant, South British Insurance Co, Ld	5, Clive Street	ditto
Marr, Alexander Andrew ..	Assistant, Macneill & Co	2, Fairlie Place	ditto
Marr, A M	Assistant, McLeod & Co	28, Dalhousie Square	ditto
Marrow, C H	Assistant Superintendent, Tele Office, E I R	E I R House	ditto
Marsh, W D L	Sub-Accountant, Mercantile Bank of India, Ld	8, Clive Street	ditto
Marshall, Eric Albert ..	Assistant, Ralli Bros, Ld	16, Hare Street	ditto
Marshall, William Henry Allan ..	Assistant, F W Heilgers & Co	1-1, Clive Street	ditto
Martin, Albert Edwin ..	Advtg Manager, Imperial Tobacco Co of India, Ld	37, Chowringhee	ditto
Martin, Arthur Ridley ..	Assistant, Ralli Bros, Ld	16, Hare Street	ditto
Martin, C A	Measurer, Bengal Chamber of Commerce	2, Clive Street	ditto
Martin, Clifford Ridley, BA ..	Assistant Master, St Thomas' School	58B, Free School Street	ditto
Martin, H P	Assistant, Burn & Co, Ld	12, Mission Row	ditto
Martin, Kenneth Bertram ..	Salseman, Army & Navy Stores, Ld	41, Chowringhee	ditto
Martin, K V	Assistant, Imperial Chemical Industries (India), Ld	18, Strand Road	ditto
Martin, Martyrose	Assistant, Hoare, Miller & Co, Ld	5, Fairlie Place	ditto
Martin, Osmond Kenneth Ridley ..	Assistant, Ralli Bros, Ld	16, Hare Street	ditto
Martin, Paul	Accountant, Walter Bushnell, Ld	21, Old Court House Street ..	ditto

No.	Names.	Style or calling.	Residence or place of business.	Religion.
	Martin, Percy Hubert	Assistant, Mackenzie, Lyall & Co	.. 5, Mission Row	Christian
	Martin, R	Surveyor, Mackintosh Burn, Ld	.. 8, Clive Street	ditto
	Martin, Sarkies	Assistant, Hoare, Miller & Co, Ld	.. 5, Fairlie Place	ditto
	Mason, J A	Assistant, Mackinnon, Mackenzie & Co	.. 8, Strand Road	ditto
	Mason, William John	Assistant, Stewarts & Lloyds, Ld	.. 6, Royal Exchange Place.. ..	ditto
	Massy, Eyre Fitzgerald Francis ..	Assistant, W S Cresswell & Co	.. 3, Clive Row	ditto
	Mathew, S B	Claims Inspector, E B R	.. 3, Kaylaghat Street	ditto
	Mathews, I K, B.Com, G D A ..	Assistant, A-G's Office, Bengal	.. Treasury Buildings	ditto
	Mathieson, H	Assistant, Mackinnon, Mackenzie & Co	.. 8, Strand Road	ditto
	Mathieson, Thomas Edgar ..	Assistant, Bengal Chamber of Commerce ..	.. 2, Clive Street	ditto
	Matthews, Aratoon Jordon ..	Manager, Motor Cycle Department, A Milton & Co, Ld	.. 156, Dharamtala Street	ditto
	Mathhews, Harold Lionel Stanley ..	Proprietor, H Matthews & Sons	.. 55, Park Street	ditto
	Maunders, E W	Cargo Surveyor, Norman, Stewart & Co	.. 9, Clive Street	ditto
	May, T G	Assistant, G E C (India), Ld	.. Magnet House, Chittaranjan Avenue (South).	ditto
	Mayers, W	Melter, Calcutta Mint	.. 47, Strand Road	ditto
	McAlpin, Alexander Ferguson ..	Manager, J H Fenner & Co, Ld	.. Mercantile Buildings	ditto
	McCaskie, C S	Asstt Supdg Engineer, B I S N Co, Ld	.. 16, Strand Road	ditto

McConnel, Thomas Alexander	..	Assistant, Martin & Harris, Ld	.. ..	.. 17, Prinsep Street	.. .. ditto
McCool, J R ..	.. ..	Assistant, Machine Tools (India), Ld	.. ..	.. Stephen House	.. .. ditto
McCraw, D ..	.. ..	Assistant, McLeod & Co	.. .. ..	.. 28, Dalhousie Square	.. .. ditto
McCrea, R H	.. ..	Assistant, Barry & Co	.. .. ..	.. 2, Fairlie Place	.. .. ditto
McCulloch, C I	.. ..	Measurer, Bengal Chamber of Commerce	..	.. 2, Clive Street	.. .. ditto
McDonald, D A	.. ..	Engineer, Calcutta Mint	.. .. ..	.. 47, Strand Road	.. .. ditto
McDonnell, R	.. ..	Assistant, Heatly & Gresham, Ld	.. ..	.. 6, Waterloo Street	.. .. ditto
McEwan, D ..	.. ..	Salesman, W H Brady & Co, Ld	.. ..	.. Mercantile Buildings	.. .. ditto
McEwan, William	.. ..	Assistant, Whiteaway Laidlaw & Co, Ld ..	..	.. 7, Chowringhee	.. .. ditto
McGhie, Adrian	.. ..	Assistant Accountant, Imperial Tobacco Co of India, Ld		.. 37, Chowringhee	.. .. ditto
McGowen, Alister	.. ..	Assistant, Royal Calcutta Turf Club	.. ..	.. 11, Russell Street	.. .. ditto
McGregor, A ..	.. ..	Assistant, Shaw, Wallace & Co	.. ..	.. 4, Bankshall Street	.. .. ditto
McGuinness, Alexander Sellars	..	Assistant, Thos Seth Apcar & Co	.. ..	.. F-1, Clive Buildings	.. .. ditto
McHoul, K ..	.. ..	Assistant, McGregor & Balfour, Ld	.. ..	.. 11, Clive Street	.. .. ditto
McKay, W G	.. ..	Assistant Marine Superintendent, B I C N Co, Ld	..	.. 16, Strand Road	.. .. ditto
McKenny, R A	.. ..	Assistant Accountant, P & O Banking Corporation, Ld		.. 1, Fairlie Place	.. .. ditto
McKenzie, David W	.. ..	Assistant, Duncan Bros & Co, Ld	.. ..	.. 101, Clive Street	.. .. ditto
McLaren, G H	.. ..	Assistant, Price, Waterhouse, Peat & Co ..	..	.. B-4, Clive Buildings	.. .. ditto

No.	Names.	Style or calling.	Residence or place of business.	Religion.
	McLaren, John	Assistant, Alfred Herbert (India), Ld	13-3, Strand Road	Christian
	McMurtrie, J B	Assistant, Glenfield & Kennedy, Ld	4, Fairlie Place	ditto
	McNamee, Joseph	Steward, Bengal Club	33, Chowringhee	ditto
	McWilliam, C A	Assistant, Kilburn & Co	4, Fairlie Place	ditto
	Mealzer, D J	Assistant, Imperial Chemical Industries (India), Ld	18, Strand Road	ditto
	Medlycott, J E	Assistant, Accountant-General's Office, Bengal	Treasury Buildings	ditto
	Meikle, G	Assistant, Balmer, Lawrie & Co, Ld	103, Clive Street	ditto
	Mendes, Ivan Joseph	Head Assistant, Map Record & Issue Branch, Surveyor-General's Office.	13, Wood Street	ditto
	Mendies, E H	Clerk, Agent's Office, E B R	3, Kaylaghat Street	ditto
	Mendies, Franklin Irvine	Assistant, C E S C, Ld	Victoria House	ditto
	Mendies, Glyn Eustace	Assistant, W T Henley's Telegraph Works Co, Ld	Old Court House Corner	ditto
	Mendies, V	3rd Assistant, P. D O, Imperial Bank of India	8, Council House Street	ditto
	Mendies, W	Measurer, Bengal Chamber of Commerce	2, Clive Street	ditto
	Mendoza, Charles	Assistant, British Mannessmann Tube Co, Ld	10, Clive Street	ditto
	Mersh, G W	Measurer, Bengal Chamber of Commerce	2, Clive Street	ditto

Metcalfe, M C	Assistant, Babcock Wilcox, Ld	4, Bankshall Street		ditto
Meyer, O J	Measurer, Bengal Chamber of Commerce	2, Clive, Street		ditto
Michael, Joseph	Assistant, Bird & Co	1-1, Clive Street		ditto
Michael, J	Assistant, J Thomas & Co	8, Mission Row		ditto
Michael, Percival William	Assistant, Begg, Dunlop & Co, Ld	2, Hare Street		ditto
Michelmore, Walter Harold Strachan	Assistant, Bird & Co	1-1, Clive Street		ditto
Middleton, Frank Leslie	Assistant, North British & Mercantile Insurance Co, Ld	101-1, Clive Street		ditto
Middleton, Robert George	Assistant, Macneill & Co	2, Fairlie Place		ditto
Miles, Ernest Charles Anthony	Assistant, Thos Seth, Apcar & Co	F-1, Clive Buildings		ditto
Miller, Alexander	Assistant, A & J Main & Co, Ld	10, Clive Street		ditto
Miller, F A C	Assistant, Imperial Bank of India	Strand Road		ditto
Miller, R S	Assistant, Barry & Co	2, Fairlie Place		ditto
Mills, A D S	Measurer, Bengal Chamber of Commerce	2, Clive Street		ditto
Milne, James Davidson	Assistant, Harnack & Co	10, Old Court House Street		ditto
Milner, A G	Assistant, *Statesman*, Ld	Statesman House		ditto
Minney, M	Insurance Broker, Manufacture's Life Insurance Co	27, Dalhousie Square		Jew
Minus, A H	Workshop Manager, McGregor & Balfour, Ld	11, Clive Street		Christian

No.	Names.	Style or calling.	Residence or place of business.	Religion.
	Misselbrook, C C	Sub-Accountant, Mercantile Bank of India, Ld	8, Clive Street	Christian
	Mitchel, Charles	Assistant, John King & Co, Ld	25, Victoria Chamber	ditto
	Mitchell, A H	Assistant, Jessop & Co, Ld	93, Clive Street	ditto
	Mitchell, C	Assistant, Landale & Morgan	3, Fairlie Place	ditto
	Mitchell, M A	Measurer, Bengal Chamber of Commerce	2, Clive Street	ditto
	Mitchell, William Alexander	Engineer, Chloride Electrical Storage Co, Ld	4, Lyons Range	ditto
	Mitchell-Innes, Wilbert Ernest	Assistant, Hoare, Miller & Co, Ld	5, Fairlie Place	ditto
	Mitton, G C	Insurance Broker, Manufacturers Life Insurance Co	27, Dalhousie Square	ditto
	Mohl, Alfred Robert	Assistant, Blacker & Co	2, Clive Street	ditto
	Moncrieff, F H W	Assistant, Jardine, Skinner & Co	4, Clive Row	ditto
	Monk, G C B	Clerk, C C M's Office, E I R	E I R House	ditto
	Moodie, Oliver Stuart	Assistant, King Bros	102, Clive Street	ditto
	Moore, L	Assistant, Jessop & Co, Ld	93, Clive Street	ditto
	Moore, Maurice	Boiler Inspector	40-1A, Free School Street	ditto
	Morgan, A J	Assistant, G E C (India), Ld	Magnet House, Chittaranjan Avenue (South).	ditto
	Morgan, E	Assistant, Balmer, Lawrie & Co, Ld	103, Clive Street	ditto

Morgan, Robert Davidson	Stock Broker, Stewart & Co	8, Clive Street		ditto
Morini, V	Assistant, Mackinnon, Mackenzie & Co	16, Strand Road		ditto
Morrell, E	Assistant, Balmer, Lawrie & Co, Ld	103, Clive Street		ditto
Morris, A	Assistant, Lipton, Ld	9, Weston Street		ditto
Morris, Innes	Assistant, Francis, Harrison, Hathaway & Co Ld	30, Chowringhee		Jew
Morris, J A	Superintendent, C M E's office, E I R	E I R House		Christian
Morris, M M	Assistant, Standard Vacuum Oil Co	6, Church Lane		ditto
Morris, Patrick Bowyer	Assistant, Davenport & Co, Ld	6, Church Lane		ditto
Morris, Thomas	Clerk, Bengal Club	33, Chowringhee		ditto
Morrison, James Binnie	Assistant, Bengal Chamber of Commerce	2, Clive Street		ditto
Morrison, N	Assistant Superintending Engineer, B I S N Co, Ld	16, Strand Road		ditto
Moss, E J R	Measurer, Bengal Chamber of Commerce	2, Clive Street		ditto
Mothersill, John Rivaz	Assistant, Blackwood, Blackwood & Co	4, Lyons Range		ditto
Mowle, R C	Assistant, Jardine, Skinner & Co	4, Clive Row		ditto
Muirden, A C	Assistant, Bell's Asbestos & Engineering (India), Ld	10, Clive Street		ditto
Muller, C H E	Assistant, Balmer, Lawrie & Co, Ld	103, Clive Street		ditto
Munro, D S	Measurer, Bengal Chamber of Commerce	2, Clive Street		ditto
Munro, St E G	Measurer, Bengal Chamber of Commerce	2, Clive Street		ditto

No.	Names.	Style or calling.	Residence or place of business.	Religion.
	Murgatroyd, F W	Clerk, C C M's Officer, E I R	E I R House	Christian
	Murison, Alister Ian	Assistant, James Finlay & Co, Ld	1, Clive Street	ditto
	Murphy, James	Steward, Bengal United Serivce Club, Ld	29, Chowringhee	ditto
	Murray, C B	Measurer, Bengal Chamber of Commerce	2, Clive Street	ditto
	Murtough, Henry Albert	Assistant, Hoare, Miller & Co, Ld	5, Fairlie Place	ditto
	Musleah, E M	Inspector, C E S C, Ld	Victoria House	Jew
	N			
	Nadler, David	Assistant, T E Thomson & Co, Ld	9, Esplanade, East	Christian
	Nehemiah, T K	Assistant, Mackinnon, Mackenzie & Co	16, Strand Road	ditto
	Nelson, Horace Frank Hamilton	Assistant, Martin & Co	12, Mission Row	ditto
	Nelson, John Lightbody	Assistant, Caledonian Insurance Co	8, Clive Street	ditto
	Nelson, P	Assistant, McLeod & Co	28, Dalhousie Square	ditto
	Nestor, Edwin Roy, B Sc	Assistant Master, Calcutta Boys' School	72, Corporation Street	ditto
	Neubo, Ashley Charles	Assistant Accountant, T E Thomson & Co, Ld	9, Esplanade, East	ditto
	Neville, G W C	Assistant, Lovelock & Lewes	4, Lyons Range	ditto
	Neville-Scott, Guy Richmond	Reviser, *Statesman*, Ld	Statesman House	ditto
	Newbond, Arthur Joseph	Reader, W Newman & Co, Ld	3, Old Court House Street	ditto

Newing, E R	Assistant, Hall & Anderson, Ld	..	31, Chowringhee	ditto
Newling, Vernon Henry	Engineer, F & C Osler, Ld	..	12, Old Court House Street ..	ditto
Newman, John Sydney	Assistant, Ralli Bros, Ld	..	16, Hare Street	ditto
Newson, A P	Assistant, Brooke Bond (India), Ld	..	2, Metcalfe Street	ditto
Newton, William Joseph ..	Assistant, Pigott Chapman & Co	..	6, Lyons Range	ditto
Niblett, Alexander Vernon ..	Assistant, Martin & Co	..	12, Mission Row	ditto
Niblett, D B	Assistant, McLeod & Co	..	28, Dalhousie Square	ditto
Nicholls, C F	Measurer, Bengal Chamber of Commerce ..	..	2, Clive Street	ditto
Nicholson, D	Engineer, G E C (India), Ld	..	Magnet House, Chittaranjan Avenue (South).	ditto
Nicolson, Thomas Frederick ..	Assistant, Blackwood, Blackwood & Co	..	4, Lyons Range	ditto
Nimmo, John Atholl Duncan, BA ..	Assistant, Duncan Brothers & Co, Ld	..	101, Clive Street	ditto
Noah, Ezekiel	Salesman, Army & Navy Stores, Ld	..	41, Chowringhee	Jew
Noble, William Mathewson ..	Assistant, Commercial Union Assurance Co, Ld ..	..	32, Dalhousie Square	Christian
Noney, Robert Wallace	Stores Manager, A Milton & Co, Ld	..	156, Dharamtala Street	ditto
Norman, G A S	Assistant, Standard Life Assurance Co	..	32, Dalhousie Square	ditto
Nunes, George	Salesman, Greaves Cotton & Co, Ld	..	60, Dharamtala Street	ditto
Nunn, Eric Herbert	Assistant, office of the I G of Police	..	Writers' Buildings	ditto
Nuttall, Charles Rodney Deedes ..	Assistant, *Statesman*, Ld	..	Statesman House	ditto
Nyss, E A	Assessor, Income-Tax Office	..	6, Esplanade, East	ditto

No.	Names.	Style or calling.	Residence or place of business.	Religion.
	O			
	O'Connell, Terence Joseph, BSc.	Engineer, Martin & Co	12, Mission Row	Christian
	O'Connor, T A	Overhead and Cable Superintendent, Calcutta Tramways Co, Ld	7, Church Lane	ditto
	Oakley, R L	Assistant, Kilburn & Co	4, Fairlie Place	ditto
	Odgers, J L	Head Draftsman, C E E' s Office, E I R	E I R House	ditto
	Odgers, Leonard	Accountant, A Milton & Co, Ld	156, Dharamtala Street	ditto
	Ogilvie, G C	Assistant, I G N & Ry Co, Ld	4, Fairlie Place	ditto
	Oliver, R	Assistant, Turner, Morrison & Co, Ld	6, Lyons Range	ditto
	Oliver, W G	L G S Officer, C A O's Office, E I R	E I R House	ditto
	Osborne, M D	Architect, Macintosh Burn, Ld	8, Clive Street	ditto
	Osborne, W H	Measurer, Bengal Chamber of Commerce	2, Clive Street	ditto
	Oswald, James	Assistant, Balmer, Lawrie & Co, Ld	103, Clive Street	ditto
	Ottignon, Alexander William	Assistant, Volkart Brothers	11, Clive Street	ditto
	Otto, F L	Assistant, Shaw, Wallace & Co	4, Bankshall Street	ditto
	Ovenstone, H	Assistant, McGregor & Balfour, Ld	11, Clive Street	ditto
	Oxley, Alfred	Assistant, J B Norton & Sons, Ld	Norton Buildings	ditto

Page, Eric Howard	Assistant, Begg, Dunlop & Co, Ld	2, Hare Street		Christian.
Page, J A	Assistant, Arlington & Co	13-3, Old Court House Street		ditto.
Paine, George Richard Montgomery	Assistant, Gillanders, Arbuthnot & Co	8, Clive Street		ditto
Palmer, Harold William	Assistant, Bird & Co	1-1, Clive Street		ditto
Papworth, L	Foreman, Remington Rand Inc	3, Council House Street		ditto
Parish, Patrick Edward Gladstone Woodbine.	Assistant, Gillanders, Arbuthnot & Co	8, Clive Street		ditto
Parker, E S	Assistant, T E Bevan & Co, Ld	Grosvenor House		ditto
Parker, Paul Richards	Examiner of Stores, Indian Stores Department (Inspection)	6, Esplanade, East		ditto
Parmara, D S	Assistant, Turner, Morrison & Co, Ld	6, Lyons Range		ditto
Parry, D W	Assistant, Imperial Chemical Industries (India), Ld	18, Strand Road		ditto
Pascal, George Aloysius Stanislaus	Assistant, Blackwood, Blackwood & Co	4, Lyons Range		ditto
Pash. Edwin Charles Fawley	Assistant, Planters' Stores and Agency Co, Ld	11, Clive Street		ditto
Paterson, A	Engineer, Holmes Wilson & Co, Ld	Norton Buildings		ditto
Paterson, George Duncan	Assistant, Moran & Co, Ld	4, Lyons Range		ditto.
Paterson, Hector MacDonald	Assistant, Bird & Co	1-1, Clive Street		ditto
Paterson, John Heselwood	Assistant, Ellerman's Arracan Rice and Trading Co, Ld	26, Dalhousie Square		ditto.

No.	Names.	Style or calling.	Residence or place of business.	Religion.
	Paterson, Robert Sinclair	Power Sales Engineer, C E S C, Ld	Victoria House	Christian
	Paton, David Johnston	Assistant, King Bros	102, Clive Street	ditto
	Paul, Herbert	Assistant, Blackwood, Blackwood & Co	4, Lyons Range	ditto
	Paul, Terence Charles Morton	Assistant, Bird & Co	1-1, Clive Street	ditto
	Paull, R C	Assistant, T E Bevan & Co, Ld	Grosvenor House	ditto
	Pavey, William Ewart	Assistant, Ranken & Co, Ld	4, Old Court House Street	ditto
	Payne, Archibald Bestra	Purchase Clerk, Bengal Iron Co, Ld	4, Lyons Range	ditto
	Payne, R W	Measurer, Bengal Chamber of Commerce	2, Clive Street	ditto
	Peacock, D	Sub-Accountant, Chartered Bank of India, Australia and China	1-1, Clive Street	ditto
	Peacock, Philip Harold	Assistant, Army and Navy Stores, Ld	41, Chowringhee	ditto
	Pearson, Herbert Frederick	Assistant, *Statesman*, Ld	Statesman House	ditto
	Pearson, Lionel Maitland	Assistant, Ford, Rhodes, Thornton & Co	Tower House, Chowringhee Square	ditto
	Penheiro, F	Assistant, Hall & Anderson, Ld	31, Chowringhee	ditto
	Pentony, Llewellyn Richard	Assistant, F W Heilgers & Co	1-1, Clive Street	ditto
	Peppercorn, A J	Assistant, McLeod & Co	28, Dalhousie Square	ditto
	Pereira, A	Assistant, Jessop & Co, Ld	93, Clive Street	ditto
	Pereira, Arthur Ivan	Assistant, British Refrigerators	30, Chowringhee	ditto

Pereira, E	Assistant, Hall & Anderson, Ld	31, Chowringhee	ditto
Perry, B	Assistant, James Murray & Co	5, Old Court House Street	ditto
Perry, B	Assistant Superintendent, Licensed Measurers Department	2, Clive Street	ditto
Perry, John Raymond	Assistant Manager, J H Fenner & Co, Ld	Mercantile Buildings	ditto
Perry, R B P	Sub-Accountant, Lloyd's Bank, Ld	101-1, Clive Street	ditto
Peters, C S, B SC	Examiner of Accounts, I T Office	1, Hare Street	ditto
Peters, O	Steward, Great Eastern Hotel, Ld	1, 2 & 3, Old Court House Street	ditto
Peters, P G	Claims Clerk, C C M's Office, E I R	E I R House	ditto
Peters, R E	Assistant, Balmer, Lawrie & Co, Ld	103, Clive Street	ditto
Peters, R G	Measurer, Bengal Chamber of Commerce	2, Clive Street	ditto
Peters, W W	Assistant, Lovelock & Lewes	4, Lyons Range	ditto
Peterson, John William, BA	Assistant Master, St Thomas' School	58-B, Free School Street	ditto
Petrie, G P	Assistant, McGregor & Balfour, Ld	11, Clive Street	ditto
Phelan, T F	Assistant, I G N & Ry Co, Ld	4, Fairlie Place	ditto
Phillippe, Eugene Alefis	Assistant Engineer, *Statesman*, Ld	Statesman House	ditto
Phillips, A	Assistant, Mackinnon, Mackenzie & Co	8, Strand Road	ditto
Phillips, Harry George	Machine Printer, Photo-Litho Branch, Surveyor-General's Office	14, Wood Street	ditto
Phillips, Herbert Angus Pengelly	Master, Elias Meyer Free School and Talmud Torah	50, Bowbazar Street	ditto

No.	Names.	Style or calling.	Residence or place of business.	Religion.
	Phillips, Sydney James ..	.. Assistant, Kodak, Ld	.. 17, Park Street	Christian
	Phoenix, N O ..	.. Crew Inspector, E B R	.. 3, Kaylaghat Street	ditto
	Pierce, E ..	.. Assistant, Jessop & Co, Ld	.. 93, Clive Street	ditto
	Pierson, S C F ..	.. Assistant, J Thomas & Co	.. 8, Mission Row	ditto
	Pinkerton, George Stewart Moir	.. Assistant, John King & Co, Ld	.. 115, Karnani Mansions	ditto
	Pinto, Bernard ..	.. Assistant, Commercial Credit Corporation, Ld ..	.. 20, Park Street ..	ditto
	Pithie, Edward John ..	.. Salesman, Birla Brothers, Ld	.. 8, Royal Exchange Place ..	ditto
	Platel, A J ..	.. Assistant, Balmer, Lawrie & Co, Ld	.. 103, Clive Street	ditto
	Playfair, Arthur Melville..	.. Assistant, Macneill & Co	.. 2, Fairlie Place	ditto
	Popovits, M D ..	.. Chief Store Keeper, G E C (India), Ld	.. Magnet House, Chittaranjan Avenue (South).	ditto
	Pordage, D ..	.. Measurer, Bengal Chamber of Commerce ..	.. 2, Clive Street	ditto
	Porter, Maurice John ..	.. Accountant, Cooke & Kelvey	.. 20, Old Court House Street ..	ditto.
	Porthouse, A D ..	.. Assistant, I G N & Ry Co, Ld	.. 4, Fairlie Place	ditto.
	Portugal, Brian ..	.. Asstt Manager, Louis Drefus & Co	.. 2, Clive Row	ditto.
	Pote, F G ..	.. Assistant, Turner, Morrison & Co, Ld	.. 6, Lyons Range	ditto.
	Potter, J ..	.. Assistant, Phœnix Assurance Co, Ld ..	.. 28, Dalhousie Square	ditto
	Poulton, Frank ..	.. Journalist, *Statesman*, Ld	.. Statesman House	ditto.

Powell, Radclyffe Edward Crichston ..	Asistant, Place, Siddons & Gough	6, Lyons Range	ditto
Power, A T	Stenographer, Imperial Chemical Industries (India), Ld ..	18, Strand Road	ditto
Power, Harold	Stenographer, Office of H M's Senior Trade Commissioner in India.	4, Fairlie Place	ditto
Preece, Morley Cutlack	Advt. Canvasser, " Star of India "	9, Dharamtala Street	ditto
Preston, E B C	Engineer, G E C (India), Ld	Magnet House, Chittaranjan Avenue (South).	ditto
Pritchard, John	Assistant, Ludlow Jute Co, Ld	7, Royal Exchange Place ..	ditto
Pritchard, John	Assistant, Whiteaway Laidlaw & Co, Ld	7, Chowringhee	ditto
Pritchard, W	Measurer, Bengal Chamber of Commerce	2, Clive Steet	ditto
Proctor, Donald ..	Sales Representative, Edwards, Ld	7, Old Court House Street ..	ditto
Prosser, T S	Assistant, A M Mair & Co	6, Royal Exchange Place ..	ditto
Pulleyn, Charles Bertram ..	Assistant, Spencer & Co, Ld	32, Chowringhee	ditto
Purcell, E M	Clerk, C C M's Office, E I R	E I R House	ditto
Purdy, W J	Assistant, Mackinnon, Mackenzie & Co	16, Strand Road	ditto
Purser, B M	Sub-Accountant, Chartered Bank of India, Australia and China	1-1, Clive Street	ditto
Pye, John Mitchell	Jt Controller, Indian Tea Licensing Committee, Bengal Chamber of Commerce	2, Clive Street	ditto
Pyne, H C	Assistant, Jessop & Co, Ld	93, Clive Street	ditto

No.	Names	Style or calling.	Residence or place of business.	Religion.
	Q			
	Quayle, H M	Assistant Accountant, Calcutta Tramways Co, Ld	7, Church Lane	Christian
	Quigley, Richard	Assistant, Samuel Fitze & Co, Ld	26, Chowringhee	ditto
	R			
	Radcliffe, D	Assistant, T E Bevan & Co, Ld	Grosvenor House	Christian
	Rankin, E H	Assistant, Standard Vacuum Oil Co	6, Church Lane	ditto
	Rasmussen, Frank John	Assistant, New Zealand Insurance Co, Ld	26, Dalhousie Square	ditto
	Raye, Melville Eric	Assistant, Martin & Harris, Ld	17, Prinsep Street	ditto
	Raymond, Abraham	Assistant, Senda & Co (India), Ld	135, Canning Street	Jew
	Raynard, George Stuijt	Assistant, Caledonian Printing Co, Ld	3, Wellesley Place	Christian
	Raynor, Vernon H (Capt)	Salesman, Godrej & Boyce Mfg Co, Ld	102, Clive Street	ditto
	Read, H	Assistant, Balmer, Lawrie & Co, Ld	103, Clive Street	ditto
	Reader, H H	Salesman, Remington Rand Inc	3, Council House Street	ditto
	Rebeiro, A K	Assistant Engineer, *Statesman*, Ld	Statesman House	ditto
	Rebeiro, Sydney	Assistant, Office of the Zoological Survey of India	Indian Museum	ditto

Reeve, Henry Charles	Assistant, Imperial Tobacco Co of India, Ld	37, Chowringhee	ditto
Reid, B C	Measurer, Bengal Chamber of Commerce	2, Clive Street	ditto
Reid, Donald Allan	Assistant, Pigott, Chapman & Co	6, Lyons Range	ditto
Reid, H E	Measurer, Bengal Chamber of Commerce	2, Clive Street	ditto
Reid, J E	Engineer, G E C (India), Ld	Magnet House, Chittaranjan Avenue (South)	ditto
Remedios, A	Assistant, Gladstone, Wyllie & Co	4, Fairlie Place	ditto
Remedios, Aquino	Clerk, Prudential Assurance Co, Ld	Clive Buildings	ditto
Remedios, Edward Francis Lewis ..	Assistant, Bengal Chamber of Commerce	2, Clive Street	ditto
Revis, W	Draftsman, C M E's Office, E I R	E I R House	ditto
Reynolds, Kenneth Richardson ..	Assistant, Macneill & Co	2, Fairlie Place	ditto
Rhodes, Keith Wemyss	Assistant, Hoare Miller & Co, Ld	5, Fairlie Place	ditto
Rhodes, Samuel N, BA (Birmingham)	Assistant Master, La Martinière	11, Loudon Street	ditto
Rice, H R	Assistant, Andrew, Yule & Co, Ld	8, Clive Row	ditto

No.	Names.	Style or calling.	Residence or place of business.	Religion.
	Richards, William	Office Superintendent, I B Petroleum Co, Ld ..	.. 8, Clive Street	Christian
	Riches, A J	Tea Expert, Lipton, Ld	.. 9, Weston Street	ditto
	Ricketts, Cyril Bertram	Assistant, Ralli Brothers, Ld	.. 16, Hare Street	ditto
	Ricketts, Raymond Dunsford ..	Assistant, Ralli Brothers, Ld	.. 16, Hare Street	ditto
	Ridley, Edward Hybart	Assistant, Harman & Co, Ld	.. 11, Government Place	ditto
	Ridsdale, L A	Engineer, Calcutta Mint	.. 47, Strand Road	ditto
	Rigby, J	Assistant, Price, Waterhouse, Peat & Co	.. B-4, Clive Buildings	ditto
	Rigby, William James	Engineer, W & T Avery, Ld	.. 11, Crooked Lane	ditto
	Ritchie, James McPhil	Assistant, Bird & Co	.. 1-1, Clive Street	ditto
	Rivers, W F	Assistant, Standard Vacuum Oil Co	.. 6, Church Lane	ditto
	Rivett, A T	Assistant Traffic Manager, Calcutta Tramways Co, Ld	.. 7, Church Lane	ditto

Rivett, W G	.. ..	Assistant, Bell's Asbestos & Engrg (India), Ld	.. .. 10, Clive Street	.. .. ditto
Roberts, Austin Edward Spencer	..	Superintendent, C M O's Office, E I R	.. .. .. E I R House	.. .. ditto
Roberts, F	.. ..	Clerk, C M E's Office, E I R	.. .. .. E I R House	.. .. ditto
Roberts, John	.. ..	Godown Manager, Baldwin Locomotive Works	.. .. 5, Mission Row	.. .. ditto
Roberts, William Edward, BSC (Lond)		Assistant Master, La Martinière	.. .. .. 11, Loudon Street	.. .. ditto
Robertson, A	.. ..	Assistant, Barry & Co	.. .. .. 2, Fairlie Place	.. .. ditto
Robertson, Bertram Gerald	..	Superintendent, Town Hall	.. .. .. 4, Esplanade, West	.. .. ditto
Robertson, C A	.. ..	Measurer, Bengal Chamber of Commerce	.. .. .. 2, Clive Street	.. .. ditto
Robertson, E J N	.. ..	Assistant Order Clerk, C O S Office, E I R	.. .. E I R House	.. .. ditto
Robertson, Ewart Gladstone	..	Assistant, Pigott, Chapman & Co	.. .. .. 6, Lyons Range	.. .. ditto
Robertson, Francis Edmund	..	Assistant, Commercial Intelligence Department, India	.. 1, Council House Street	.. .. ditto
Robertson, G G	.. ..	Assistant, Mackinnon, Mackenzie & Co	.. .. .. 16, Strand Road	.. .. ditto
Robertson, Henry Leslie	.. ..	Assistant, Hoare, Miller & Co, Ld	.. .. .. 5, Fairlie Place	.. .. ditto

No.	Names.	Style or calling.	Residence or place of business.	Religion.
	Robertson, R	Assistant, Mackinnon, Mackenzie & Co	16, Strand Road	Christian
	Robinson, Cedric Arthur Betham ..	Assistant, Planters' Stores & Agency Co, Ld	11, Clive Street	ditto
	Robinson, Donald	Assistant, Bird & Co	1-1, Clive Street	ditto
	Robinson, Frank Cecil	Office Manager, George Spencer, Moulton & Co (India), Ld ..	8, Esplanade, East	ditto
	Robson, Robert Donald	Assistant, Thos Cook & Son, Ld	4, Dalhousie Square	ditto
	Robson, W	Engineer, Mackintosh, Burn, Ld	8, Clive Street	ditto
	Rodgers, J R	Assistant, Jessop & Co, Ld	93, Clive Street	ditto
	Rodrigues, F	Assistant, Hall & Anderson, Ld	31, Chowrighnee	ditto
	Rodrigues, J C	Publicity Clerk, C C M's Office, E I R	E I R House	ditto
	Rodrigues, Lawrence	Assistant, Govan Bros	20, Park Street	ditto
	Roger, Alexander	Assistant, Bird & Co	1-1, Clive Street	ditto
	Roger, W D	Assistant, J Thomas & Co	8, Mission Row	ditto

Rogers, William	Assistant, Lyall Marshall & Co	4, Fairlie Place	..	ditto
Rollo, D J	Assistant, McLeod & Co	28, Dalhousie Square	..	ditto
Ronaldson, S	Assistant, Mackinnon, Mackenzie & Co	16, Strand Road	..	ditto
Rooke, W H	Measurer, Bengal Chamber of Commerce	2, Clive Street	..	ditto
Rosario, Oswald Ernest	Assistant, Francis, Harrison, Hathaway & Co, Ld	30, Chowringhee	..	ditto
Rose, A J	Assistant Accountant, Port Commissioners' Office	Strand Road	..	ditto
Rose, H H	Assistant, Balmer, Lawrie & Co, Ld	103, Clive Street	..	ditto
Ross, D E A	Measurer, Bengal Chamber of Commerce	2, Clive Street	..	ditto
Ross, John Horatio Hardcastle	Assistant, James, Finlay & Co, Ld	1, Clive Street	..	ditto
Ross, John	Assistant, Landale & Clark, Ld	11, Clive Street	..	ditto
Rotshton, G L	Assistant, Price, Waterhouse, Peat & Co	B-4, Clive Buildings	..	ditto
Rowe, C	Sub-Accountant, Lloyds Bank, Ld	101-1, Clive Street	..	ditto
Rowe, D S V	Assistant, Price, Waterhouse, Peat & Co	B-4, Clive Buildings	..	ditto
Rowland, J H	Audit Inspector, Port Commissioners' office	Strand Road	..	ditto
Rozario, A D	Section-Holder, P S Office, E I R	E I R House	..	ditto

No.	Names.	Style or calling.	Residence or place of business.	Religion.
	Rozario, M	.. Assistant, Hall & Anderson, Ld	.. 31, Chowringhee ..	Christian
	Rundlett , R C ..	.. Assistant, Jessop & Co, Ld	.. 93, Clive Street	ditto
	Runge, Conrad ..	.. Assistant, W H Harton & Co, Ld	.. 5, Clive Ghat Street	ditto
	Rushton, William Arthur Hickie ..	Sub-Accountant, Eastern Bank, Ld	.. 9, Clive Street	ditto
	Russell, Joseph	Salesman, C C Wakefield & Co, Ld	.. 7, Royal Exchange Place	ditto
	Rutherford, A M ..	.. Assistant Accountant, Imperial Bank of India ..	.. Strand Road	ditto
	Ruthven, F D	Assistant, Landale & Morgan	.. 3, Fairlie Place	ditto
	Ryan, Alfred George ..	.. Mains Jointer, C E S C, Ld	.. Victoria House	ditto
	Ryan, Danial O'Connell	.. Assistant, Landale & Clark, Ld	.. 11, Clive Street	ditto
	Ryan, T J	Claims Clerk, C C M's Office, E I R	.. E I R House	ditto
	Ryper, H J	Assistant, I G N & Ry Co, Ld	.. Nimtala	ditto
	S			
	Sadler, J D	Assistant, I G N & Ry Co, Ld	.. 4, Fairlie Place	Christian
	Sample, C G	Assistant, Standard Vacuum Oil Co	.. 6, Church Lane	ditto
	Samuel, Alexander	Stenographer, *Statesman*, Ld	.. Statesman House	ditto
	Samuel, Benjamin	Assistant, Tata Iron & Steel Co, Ld	.. 100, Clive Street	Jew
	Samuel, F J	Assistant, Ingersoll Rand (India), Ld	.. 15, Clive Street	Christian

Samuel, Henry	Assistant, Hamilton & Co, Ld	..	..	8 Old Court House Street	ditto
Samuel, Sushil	Assistant, Mackinnon, Mackenzie & Co	..	..	8, Strand Road	ditto
Sandelands, D I	Assistant, McLeod & Co	..	..	28, Dalhousie Square	ditto.
Sandeman, R K	Assistant, Jardine, Skinner & Co	..	..	4, Clive Row	ditto
Sanderson, C J	Assistant, Poppe, Delius & Co	..	..	2 & 3, Clive Row	ditto
Sargent, Thomas	Assistant, Whiteaway Laidlaw & Co, Ld	..	..	7, Chowringhee	ditto
Saunders, Alfred William	Engineer, Linotype & Machinery, Ld	..	..	21, Bowbazar Street	ditto
Savage, G	Assistant, G E C (India), Ld (South)	..	..	Magnet House, Chittaranjan Avenue (South)	ditto
Scatchard, James Frederick	Assistant, J B Norton & Sons, Ld	..	..	Norton Buildings	ditto
Scott, Claude John	Sub-Editor, Statesman, Ld	..	..	Statesman House	ditto
Scott, D	Sub-Accountant, Mercantile Bank of India, Ld	..	..	8, Clive Street	ditto
Scott, David Baillie	Assistant, Bird & Co	..	..	1-1, Clive Street	ditto
Scott, David Noel	Assistant, Gillanders, Arbuthnot & Co	..	..	8, Clive Street	ditto
Scott, I B W	Assistant, Mackinnon, Mackenzie & Co	..	..	16, Strand Road	ditto

No.	Names.	Style or calling.	Residence or place of business.	Religion.
	Scott, W B	Assistant, Remington Rand Inc	3, Council House Street	Christian
	Scott, W S	Assistant, J Thomas & Co	8, Mission Row	ditto
	Scrimgeour, Frank Henry Vernon ..	Assistant, Duncan Bros & Co, Ld	101, Clive Street	ditto
	Scurrah, Maurice Shaw	Assistant, *Statesman*, Ld	Statesman House	ditto
	Seaman, E	Assistant, Allen & Hanburys, Ld	C-3, Clive Buildings	ditto
	Seignior, Charles Harold Townsend (Capt).	Assistant, Macneill & Co	2, Fairlie Place	ditto
	Selfe, Frank Edward	Assistant Engraver, Survey of India	13, Wood Street	ditto
	Sevastopulo, Demetrius George ..	Assistant, Ralli Brothers, Ld	16, Hare Street	ditto
	Seymour, Geroge Albert	Assistant, Army & Navy Stores, Ld	41, Chowringhee ..	ditto
	Shanahan, E P	Assistant, Machine Tools (India) Ld	Stephen House	ditto
	Sharman, D	Assistant, Kilburn & Co	4, Fairlie Place	ditto
	Shaw, C M	Assistant, G E C (India) Ld	Magnet House, Chittaranjan Avenue (South).	ditto
	Shaw, Edward Barrie	Sub-Editor, *Statesman*, Ld	Statesman House	ditto
	Shaw, Joseph West	Assistant, Roneo, Ld	9, Clive Street	ditto
	Shaw, R	Assistant, Barry & Co	2, Fairlie Place	ditto

Shedden, Hamilton	Assistant, Macneill & Co	2, Fairlie Place		ditto
Sheehan, F G	Assistant, Remington Rand Inc	3, Council House Street		ditto
Shellenberger, H R	Assistant, Standard Vacuum Oil Co	6, Church Lane		ditto
Sherman, Harold Randolf	Assistant Manager, Walford Transport, Ld	71-73, Park Street		ditto
Shircore, George Stuart	Assistant, Thos Cook & Son, Ld	4, Dalhousie Square		ditto
Shircore, W	Assistant, Grahams Trading Co (India), Ld	6, Lyons Range		ditto
Shuldham, D P	Assistant, Gladstone, Wyllie & Co	4, Fairlie Place		ditto
Shuttleworth, Leslie	Assistant, F W Heilgers & Co	1-1, Clive Street		ditto
Siddons, J	Assistant, W H Targett & Co	1, Commercial Buildings		Jew
Silas, Abraham	Assistant, David, Sasoon & Co, Ld	4, Lyons Range		ditto
Silver, L C	Measurer, Bengal Chamber of Commerce	2, Clive Street		Christian
Sim, G A S	Accountant, Andrew, Yule & Co, Ld	8, Clive Row		ditto
Simmons, Geoffrey Paish	Assistant, Birkmyre Bros	6, Clive Row		ditto
Simmons, Thomas Robert	Stenographer, *Statesman*, Ld	Statesman House		ditto

No.	Names.	Style or calling.	Residence or place of business.	Religion.
	Simons, Arthur Lionel	Assistant Master, St. Thomas' School	.. 58-B, Free School Street	Christian
	Simpson, A G	Assistant, George Henderson & Co, Ld ..	.. 101-1, Clive Street	ditto
	Simpson, A L	Engineer, Calcutta Mint	.. 47, Strand Road	ditto
	Simpson, A N	Assistant, Balmer, Lawrie & Co, Ld	.. 103, Clive Street	ditto
	Simpson, Belford Bruce	Assistant, Moran & Co, Ld	.. 4, Lyons Range	ditto
	Simpson, C H	Assistant, W Leslie & Co	.. 19, Chowringhee	ditto
	Simpson, James Herbert	Assistant, Kalamazoo (Sales), Ld	.. 4, Fairlie Place	ditto
	Simpson, P J	Assistant, G E C (India), Ld	.. Magnet House, Chittaranjan Avenue (South).	ditto
	Simpson, T R	Assistant, Burn & Co, Ld	.. 12, Mission Row	ditto
	Sims, E H	Assistant, Guest, Keen, Williams, Ld	.. 7, Council House Street	ditto
	Sinclair, Ernest Gordon	Assistant, Gillanders, Arbuthnot & Co ..	.. 8, Clive Street	ditto
	Skelhorn, Charles Arjuna ..	Assistant, Grindlay & Co, Ld	.. 6, Church Lane	ditto
	Skinner, F W B	Measurer, Bengal Chamber of Commerce ..	.. 2, Clive Street	ditto
	Slade, S	Assistant, Lipton, Ld	.. 9, Weston Street ..	ditto
	Small, C O	Assistant, McLeod & Co	.. 28, Dalhousie Square	ditto

Smethurst, Thomas Victor	.. Mains Jointer, C E S C, Ld	..	.. Victoria House	.. .. ditto
Smith, A ..	.. Dy Traffic Manager, Calcutta Tramways Co, Ld	..	.. 7, Church Lane	.. .. ditto
Smith, A C ..	.. Examiner of Accounts, Income-tax Office,	..	.. 3, Government Place, West	.. ditto
Smith, Archibold Elsden	.. Assistant Construction Engineer, C E S C, Ld	..	.. Victoria House	.. .. ditto
Smith, A K ..	.. Sub-Accountant, Chartered Bank of India, Australia and China		1-1, Clive Street	.. .. ditto
Smith, C D ..	.. Assistant, Lovelock & Lewes	.. ..	.. 4, Lyons Range	.. .. ditto
Smith, D S ..	.. Assistant, Landale & Morgan	.. ..	.. 3, Fairlie Place	.. .. ditto
Smith, Edward Alexander	.. Mains Jointer, C E S C, Ld	.. ..	.. Victoria House	.. .. ditto
Smith, Eric Baird ..	.. Assistant, Fraser & Co, Ld	.. ..	.. 4, Fairlie Place	.. .. ditto
Smith, Frederick Burnett	.. Inspector, Marconi Co, Ld	.. ..	.. 6, Old Post Office Street	.. ditto
Smith, Frank Gwyther ..	.. Assistant, F C Pallachi & Co	.. ..	.. 7, Royal Exchange Place	.. ditto
Smith, G ..	.. Assistant, G E C (India) Ld	.. ..	.. Magnet House, Chittaranjan Avenue (South).	ditto
Smith, Henry Malcolm ..	.. Assistant, Hoare Miller & Co, Ld	.. ..	.. 5, Fairlie Place	.. .. ditto
Smith, J	.. Assistant, J Thonas & Co	.. .. ..	.. 8, Mission Row	.. .. ditto
Smith, John Sydney ..	.. Assistant, James, Finlay & Co, Ld	.. ..	.. 1, Clive Street	.. .. ditto
Smith, Kenneth Waldo ..	.. Traveller, Alfred Herbert (India), Ld	.. ..	.. 13-3, Strand Road	.. .. ditto
Smith, Kenneth Weir ..	.. Assistant Accountant, National Bank of India, Ld	..	.. 104, Clive Street	.. .. ditto

No.	Names.	Style or calling.	Residence or place of business.	Religion.
	Smith, R	Assistant, Jessop & Co, Ld	.. 93, Clive Street	Christian
	Smith, R J	Assistant, Turner, Morrison & Co, Ld	.. 6, Lyons Range	ditto
	Smith, R Leslie	Sub-Accountant, Lloyd Bank, Ld	.. 101-1, Clive Street	ditto
	Smith, S	Assistant, Brooke Bond (India), Ld	.. 2, Metcalfe Street	ditto
	Smith, Stanley Gwyther ..	Assistant, Bird & Co	.. 1-1, Clive Street	ditto
	Smith, Stuart Gordon	Assistant, Northern Assurance Co, Ld	.. 7, Hare Street	ditto
	Smith, V A	Assistant Accountant, Calcutta Tramways Co, Ld ..	.. 7, Church Lane	ditto
	Smyth, G C G	Assistant Superintendent, Licensed Measurers' Department	.. 2, Clive Street ..	ditto
	Smyth, J G	Assistant Superintendent, Licensed Measurers' Department	.. 2, Clive Street	ditto
	Smythe, E M	Assistant, Jardine, Skinner & Co	.. 4, Clive Row	ditto
	Snell, Maurice Donald	Assistant, Francis, Harrison, Hathaway & Co, Ld ..	.. 30, Chowringhee	ditto
	Somerville, A D	Assistant, Jardine, Skinner & Co	.. 4, Clive Row	ditto
	Somerville, Arthur James ..	Assistant, Gillanders, Arbuthnot & Co	.. 8, Clive Street	ditto
	Sopher, Solomon	Assistant, E Meyer & Co (1926), Ld	.. 2, Clive Ghat Street	ditto
	Soubolle, Montfort Gervase ..	Assistant, Bengal Chamber of Commerce ..	.. 2, Clive Street	ditto
	Souce, C A	Measurer, Bengal Chamber of Commerce	.. 2, Clive Street	ditto

Sparkes, E A	Sub-Accountant, Grindlay & Co, Ld	6, Church Lane		ditto.
Spencer, H J	Assistant, Calcutta Mint	47, Strand Road		ditto
Spooner, Charles Selwyn	Assistant, South British Insurance Co, Ld	5, Clive Street		ditto
Spooner, Edwin George	Assistant, Martin & Co	12, Mission Row		ditto
Stagg, Edward Charles	Assistant, Bengal Chamber of Commerce	2, Clive Street		ditto
Standish, N	Assistant, McLeod & Co	28, Dalhousie Square		ditto
Stanley, D R	Assistant, Balmer, Lawrie & Co, Ld	103, Clive Street		ditto
Stannard, Leonard Russell	Assistant, Army & Navy Stores, Ld	41, Chowringhee		ditto
Stapleton, F G	Engineer, William Jacks & Co	10, Clive Street		ditto
Stapleton, J	Measurer, Bengal Chamber of Commerce	2, Clive Street		ditto
Staynor, Denis Elver	Clerk, C O P S, E I R	E I R House		ditto
Steel, C S	Inspector of Factories, Benga	40-1A, Free School Street		ditto
Stephens, Edwin Arnold	Assistant, Ralli Brothers, Ld	16, Hare Street		ditto
Stephens, H S	Assistant, Turner, Morrison & Co, Ld	6, Lyons Range		ditto

No.	Names	Style or calling.	Residence or place of business.	Religion.
	Stephens, J A	Assistant, Gladstone, Wyllie & Co	.. 4, Fairlie Place	Christian
	Stewart, C	Assistant, Jardine, Skinner & Co	.. 4, Clive Row	ditto
	Stevens, George Donald Ross ..	Assistant, Macneill & Co	.. 2, Fairlie Place	ditto
	Stevens, Michael George ..	Assistant, Ralli Brothers, Ld	.. 16, Hare Street	ditto
	Stevenson, L J	Engineer, Mackintosh Burn, Ld	.. 8, Clive Street	ditto
	Stevenson, Sidney	Assistant, James, Finlay & Co, Ld	.. 1, Clive Street	ditto
	Stevenson, S L	Sub-Accountant, Grindlay & Co, Ld	.. 6, Church Lane	ditto
	Stewart, J A	Assistant, Halley Brothers, Ld	.. 7, Canning Street	ditto
	Stewart, J H	Measurer, Bengal Chamber of Commerce ..	.. 2, Clive Street	ditto
	Stewart, Thomas Inches	Assistant, Moran & Co, Ld	.. 4, Lyons Range	ditto
	Stewart, William Harvey ..	Assistant, Bird & Co	.. 1-1, Clive Street	ditto
	Stock, L C A	Clerk, C C M's Office, E I R	.. E I R House ..	ditto
	Stocking, Emile	Assistant Engineer, Texas Co (India), Ld	.. 11, Esplanade, East ..	ditto

Stone, B C K	..	.. Drawing Office Supdt, Calcutta Improvement Trust	..	.. 5, Clive Street	.. .. ditto
Stone, D A G	..	.. Sub-Accountant, Lloyds Bank, Ld	.. ..	.. 101-1, Clive Street	.. .. ditto
Stott, James	..	.. Tote Manager, Royal Calcutta Turf Club	..	.. 11, Russell Street	.. .. ditto
Stratton, Alexander Robertson	..	Assistant, Bird & Co	.. ..	.. 1-1, Clive Street	.. .. ditto
Strithers, Robert	..	.. Assistant, T E Thomson & Co, Ld	.. ..	.. 9, Esplanade, East	... .. ditto
Stubbs, A W ..	..	.. Salesman, Alfred Herbert (India), Ld	.. ..	.. 5, Dalhousie Square	.. .. ditto
Summers, John Adam	..	.. Sub-Accountant, Chartered Bank of India, Australia and China		1-1, Clive Street	.. .. ditto
Sutherland, James Alastair	..	Assistant Editor, Thorne's, Ld	.. ..	.. 13, Ezra Mansions	.. .. ditto
Sutherland, John James Erims	..	Assistant, Bengal Chamber of Commerce	.. ..	.. 2, Clive Street	.. .. ditto
Swales, F W	..	.. Assistant, Standard Vacuum Oil Co	.. ..	.. 6, Church Lane	.. .. ditto
Swallow, Edward Phillip	..	Assistant Manager, Valvoline Oil Co	..	.. B-5, Clive Buildings	.. .. ditto
Swann, Alec Jeffery	..	.. Clerk, Bengal Club	.. .. ..	.. 33, Chowringhee	.. .. ditto
Swaris, A V	..	.. Measurer, Bengal Chamber of Commerce	..	.. 2, Clive Street	.. .. ditto

No.	Names.	Style or calling.	Residence or place of business.	Religion.
	Sweet, Robert Cecil	Assistant, Moran & Co, Ld	4, Lyons Range	Christian
	Sykes, P H	Assistant, Balmer, Lawrie & Co, Ld	103, Clive Street	ditto
	T			
	Taft, E	Assistant, Brooke Bond India, Ld	2, Metcalfe Street	Christian
	Talbot, D	Assistant, T E Bevan & Co, Ld	Grosvenor House	ditto
	Tallack, Hugh Mackay	Assistant, Macneill & Co	2, Fairlie place	ditto
	Tanfield, F R	Assistant, Liverpool & London & Globe Insurance Co, Ld ..	26, Dalhousie Square	ditto
	Tanner, G H	Assistant, Hall & Anderson, Ld	31, Chowringhee	ditto
	Tattersall, A C	Assistant, Hall & Anderson, Ld	31, Chowringhee	ditto
	Taylor, A O'D	Assistant, Reed Ward & Co	6, Lyons Range	ditto
	Taylor, C K	Technical Assistant, Robert Ingham Clark & Co, Ld ..	2, Clive Row	ditto
	Taylor, David G	Assistant, Taylor's Gramophone Saloon	15-4, Chowringhee	ditto
	Taylor, G W	Assistant, Lovelock & Lewes	4, Lyons Range	ditto
	Taylor, Harry Eric Fitzgerald ..	Assistant, Macneill & Co	2, Fairlie Place	ditto
	Taylor, James Niven	Assistant, Ralli Brothers, Ld	16, Hare Street	ditto

Taylor, R J	Assistant, H Hobbs & Co, Ld	9, Old Court House Street		ditto
Taylor, William John Bladen	Partner, Johnston & Hoffman	10, Chowringhee		ditto
Teasdale, Dennis George Whigham	Assistant, Bird & Co	1-1, Clive Street		ditto
Teasdale, R B W	Assistant, Spencer & Co, Ld	32, Chowringhee		ditto
Tellis, Albert Santiago	Assistant, May & Baker (India), Ld	11, Clive Street		ditto
Tellis, Vivian	Assistant, May & Baker (India), Ld	11, Clive Street		ditto
Thacker, Maneklall Sankelchand	Assistant Superintendent (Testing) C E S C, Ld	Victoria House		ditto
Thaddeus, W A	Measurer, Bengal Chamber of Commerce	2, Clive Street		ditto
Thom, C D	Assistant, George, Henderson & Co, Ld	101-1, Clive Street		ditto
Thom, W	Assistant, Thomas Duff & Co, Ld	3, Clive Row		ditto
Thomas, Basil Arthur	Assistant, Bird & Co	1-1, Clive Street		ditto
Thomas, C H	Assistant, J Thomas & Co	8, Mission Row		ditto
Thomas, Clifford	Assistant, Lionel Edwards, Ld	D-1, Clive Buildings		ditto
Thomas, George Arthur	Head Litho Machine Printer, Surveyor-General's Office	14, Wood Street		ditto
Thomas, L E	Lino Operator, Government of India Press	8, Hastings Street		ditto
Thomas, P H	Assistant, J Thomas & Co	8, Mission Row		ditto
Thomas, R A S	Assistant, J Thomas & Co	8, Mission Row		ditto

No.	Names.	Style or calling.	Residence or place of business.	Religion.
	Thomas, R Chilton	Assistant, Babcock & Wilcox, Ld	.. 4, Bankshall Street	Christian
	Thomas, Ross Arnot	Assistant Manager, I B P Co, Ld	.. 8, Clive Street	ditto
	Thomas, R V	Sub-Accountant, Mercantile Bank of India, Ld ..	.. 8, Clive Street	ditto
	Thomas, S	Assistant, Mackinnon, Mackenzie & Co	.. 8, Strand Road	ditto
	Thompson, A W	Assistant, Mackinnon, Mackenzie & Co ..	.. 8, Strand Road	ditto
	Thompson, E B	Assistant Surveyor, Lardner, North & Co	.. 8, Strand Road	ditto
	Thompson, E C A	Assistant, Price Waterhouse, Peat & Co ..	.. B-4, Clive Buildings	ditto
	Thomson, C F	Assistant, W Haworth & Co	.. 1, Commercial Buildings	ditto
	Thomson, F	Measurer, Bengal Chamber of Commerce	.. 2, Clive Street	ditto
	Thomson, N ..	Assistant, J Thomas & Co	.. 8, Mission Row	ditto
	Thorp, H	Assistant, Jessop & Co, Ld	.. 93, Clive Street	ditto
	Thorpe, Douglas Stewart ..	Assistant, Gillanders, Arbuthnot & Co ..	.. 8, Clive Street	ditto
	Thwaites, Edward Arthur George ..	Assistant, Martin & Co	.. 12, Mission Row	ditto
	Tiffany, W	Assistant, Kilburn & Co	.. 4, Fairlie Place	ditto
	Toster, Perris	Engineer, F & C Osler, Ld	.. 12, Old Court House Street ..	ditto
	Tovey, Horace	Assistant, F W Heilgers & Co	.. 1-1, Clive Street	ditto
	Tredaway, G I	Assistant, J Thomas & Co	.. 8, Mission Row	ditto

Trutwein, Gerald Edmond	..	Assistant, Place, Siddons & Gough	..	6, Lyons Range	ditto
Tuach, Alexander	..	Assistant, Caledonian Printing Co, Ld	..	3, Wellesly Place	ditto
Turner, Raymond Jeremiah	..	Assistant, Imperial Tobacco Co of India, Ld	..	37, Chowringhee	ditto
Tyro, F	..	Assistant, Balmer, Lawrie & Co, Ld	..	103, Clive Street	ditto

U

Uden, H T	..	Assistant, Hall & Anderson, Ld	..	31, Chowringhee	Christian
Unite, T G S	..	Assistant, Jardine, Skinner & Co	..	4, Clive Row	ditto
Urage, Victor Cecil	..	Assistant, T E Thomson & Co, Ld	..	9, Esplanade, East	ditto

V

Vallis, Louis Joseph	..	Photographer, Photo-Litho Branch, Surveyor-General's Office	..	14, Wood Street	Christian
Vallis, S C	..	Measurer, Bengal Chamber of Commerce	..	2, Clive Street	ditto
Vandort, E A F	..	Measurer, Bengal Chamber of Commerce	..	2, Clive Street	ditto
Vandort, G	..	Measurer, Bengal Chamber of Commerce	..	2, Clive Street	ditto
Vandort, J A	..	Measurer, Bengal Chamber of Commerce	..	2, Clive Street	ditto
Vanspall, Percy Richard Charles	..	Assistant, Cox & Kings (Agents), Ld	..	5, Bankshall Street	ditto
Vaughan, N M	..	Assistant, Shaw, Wallace & Co	..	4, Bankshall Street	ditto

No.	Names.	Style or calling.	Residence or place of business.	Religion.
	Vernede, Jack Ronald ..	.. Accountant, Duncan Brothers & Co, Ld ..	.. 101, Clive Street ..	.. Christian
	Vernieux, D S ..	.. Superintendent of Stores, Calcutta Tramways Co, Ld	.. 7, Church Lane ..	.. ditto
	Vernieux, L E ..	.. Head Assistant, Calcutta Tramways Co, Ld ..	.. 7, Church Lane ..	.. ditto
	Verona, E A ..	.. Stenographer, Bell's Asbestos & Engineering (India), Ld	.. 10, Clive Street ..	.. ditto
	Verona, J R ..	.. Measurer, Bengal Chamber of Commerce ..	.. 2, Clive Street ..	.. ditto
	Verona, Leo ..	.. Assistant, Duncan Brothers & Co, Ld	.. 101, Clive Street ..	.. ditto
	Vessey, S J ..	.. Assistant Manager, John Dewar & Sons, Ld ..	.. 12, Hare Street ..	.. ditto
	Viera, F St Clair Da' Luz	.. Assistant, Geo Henderson & Co, Ld	.. 101-1, Clive Street ..	.. ditto
	Vincent, Arthur ..	.. Ship Draughtsman, John King & Co, Ld ..	.. 1, Stephen Court, Park Street	.. ditto
	Vincent, Lazarus Andrew	.. Assistant, Bengal Chamber of Commerce ..	.. 2, Clive Street ..	.. ditto
	Vincent, Reginald Josselyn	.. Assistant, Royal Calcutta Turf Club	.. 11, Russell Street ..	.. ditto
	Vincent, V J ..	.. Head Clerk, Income-tax Office	.. 1, Hare Street ..	.. ditto
	Violett, Q ..	.. Assistant, Standard Vacuum Oil Co	.. 6, Church Lane ..	.. ditto
	Vlasto, Jack John ..	.. Assistant, Ralli Brothers, Ld	.. 16, Hare Street ..	.. ditto
	Voller, J D ..	.. Uncovenanted Staff, Imperial Bank of India ..	.. Strand Road ..	.. ditto
	Vyse, Theodore Alfred, B A	.. Assistant Master, St Thomas' School	.. 58B, Free School Street ..	.. ditto

W

Walker, Albert William	Engineer, John Thompson (Wolverhampton), Ld ..	.. 4, Fairlie Place	ditto
Walker, David	Assistant, North British & Mercantile Insurance Co, Ld ..	101-1, Clive Street	ditto
Walker, E	Assistant, B I S N Co, Ld	.. 13, Lindsay Street	ditto
Walker, J	Permanent Way Assistant, Calcutta Tramways Co, Ld ..	7, Church Lane	ditto
Walker, James	Engineer, W & T Avery, Ld	.. 11, Crooked Lane	ditto
Walker, J N	Assistant, Standard Vacuum Oil Co	.. 6, Church Lane	ditto
Wallace, Chas. Ronald	Advertising Canvasser, *Statesman*, Ld	.. Statesman House	ditto
Wallace, Kenneth Edward ..	Stenographer, Hoare Miller & Co, Ld	.. 5, Fairlie Place	ditto
Wallace, Lawrence Russell, BSC (Lond)	Assistant Master, La Martiniere	.. 11, Loudon Street	ditto
Wallace, Malcolm Jeffrys ..	Assistant, Macneill & Co	.. 2, Fairlie Place	ditto
Waller, Richard Garnett ..	Assistant, Davenport & Co, Ld	.. 6, Church Lane	ditto
Walsh, Harold St Clair	Assistant, Macneill & Co	.. 2, Fairlie Place	ditto
Walsh, L I	Assistant Salesman, Marshall Sons & Co (India), Ld ..	.. 99, Clive Street	ditto
Walsh, Robert ..	Warehouse Manager, May & Baker (India), Ld ..	.. 11, Clive Street	ditto
Walshé, D P	Measurer, Bengal Chamber of Commerce ..	.. 2, Clive Street	ditto

No.	Names.	Style or calling.	Residence or place of business.	Religion.
	Walter, George Meppon	Salesman, Blackwood Blackwood & Co	4, Lyons Range	Christian
	Walters, B	Assistant, Mackinnon, Mackenzie & Co	8, Strand Road	ditto
	Walton, William	Traveller, Alfred Herbert (India), Ld	13-3, Strand Road	ditto
	Ward, H G	Accounts Officer (Establishment), E I R	E I R House	ditto
	Ward, J A	Assistant, Andrew Yule & Co, Ld	8, Clive Row	ditto
	Ward, Leonard Harris	Assistant, Cox & Kings (Agents), Ld	5, Bankshall Street	ditto
	Ward, W A	Assistant, J Thomas & Co	8, Mission Row	ditto
	Watkins, W S	Office Superintendent, Engineering Deptt, E B R	3, Kaylaghat Street	ditto
	Watson, A C	Assistant, H D Cartwright & Co	8, Clive Street	ditto
	Watson, Albert Luther	Assistant, Blackwood Blackwood & Co	4, Lyons Range	ditto
	Watson, Arthur Patrick	Assistant, Alfred Herbert (India), Ld	13-3, Strand Road	ditto
	Watson, G E	Sub-Accountant, Chartered Bank of India, Australia and China	1-1, Clive Street	ditto
	Watson, J A	Assistant, Norwich Union Fire Insurance Society, Ld	8, Old Court House Street	ditto
	Watson, James Buchan	Assistant, Keymer Bagshawe & Co, Ld	4, Lyons Range	ditto

Watt, J J	Offg L G S Officer, (C O P S), E I R	E I R House	ditto
Waugh, G	Head Draftsman, C M E's Office, E I R	E I R House	ditto
Webster, N V H	Assistant, Turner, Morrison & Co, Ld	6, Lyons Range	ditto
Webster, R O	Assistant, Balmer, Lawrie & Co, Ld	103, Clive Street	ditto
Webster, William James	Advertising Canvasser, *Statesman*, Ld	*Statesman* House	ditto
Weingartner, George Anthony	Assistant, A Milton & Co, Ld	156, Dharamtala Street	ditto
Weir, Eric Wilford	Assistant, T E Thomson & Co, Ld	9, Esplanade, East	ditto
Weldon-Church, Alexander Bertram	Assistant, Gillanders, Arbuthnot & Co	8, Clive Street	ditto
Wells, C W	Measurer, Bengal Chamber of Commerce	2, Clive Street	ditto
Wells, H W	Assistant, Roberts, McLean & Co, Ld	101, Clive Street	ditto
Westgarth, Spencer	Assistant, Whiteaway Laidlaw & Co, Ld	7, Chowringhee	ditto
Wheeler, B H	Sales Assistant, Remington Rand Inc,	3, Council House Street	ditto

No.	Names.	Style or calling.	Residence or place of business.	Religion.
	Wheeler, Edwin Jones	.. Assistant, Army & Navy Stores, Ld	.. 41, Chowringhee ..	.. Christian
	Wheeler, William Ebeneza	.. Assistant, British Refrigerators	.. 30, Chowringhee	ditto
	White, J H ..	.. Assistant, F W Heilgers, & Co	.. 1-1, Clive Street	ditto
	White, W U ..	.. Assistant Associated Electrical Industries (India), Ld	.. A-3, Clive Buildings	ditto
	Whitehead, R B ..	.. Assistant, Turner Morrison & Co, Ld	.. 6, Lyons Range	ditto
	Whitlock, Edward ..	.. Mains Jointer, C E S C, Ld	.. Victoria House	ditto
	Whittaker, R	.. Engineer, W & T Avery, Ld	.. 11, Crooked Lane	ditto
	Wickham, R S ..	.. Secretary to the Agent, Calcutta Tramways Co, Ld ..	.. 7, Church Lane	ditto
	Wickins, J ..	.. Time-Keeper, Printing Superintendent's Office, E I R	.. E I R House	ditto
	Wigzell, Arthur Ernest	.. Assistant, Francis, Harrison, Hathaway & Co, Ld ..	.. 30, Chowringhee, ...	ditto
	Wilkinson, Vivian John	.. Accountant, Scroggie Brothers ..	.. 2, Clive Ghat Street	ditto

Wilks, George Charles ..	.. Assistant, Mackenzie, Lyall & Co	..	.. 5, Mission Row ..	.. ditto
Will, A C F ..	.. Stores Buyer, Brooke Bond (India), Ld	..	.. 2, Metcalfe Street ..	.. ditto
Williams, E J ..	.. Deputy Superintendent, Telegraphs, E B R	..	.. 3, Kaylaghat Street ..	.. ditto
Williams, Gilbert Daniel ..	.. Assistant, Cox & Kings (Agents), Ld ..	..	.. 5, Bankshall Street ..	.. ditto
Williams, J I ..	.. Assistant, I G N & Ry Co, Ld	..	.. 4, Fairlie Place ..	.. ditto
Williams, L E ..	.. Assistant, Hall & Anderson, Ld ..	..	.. 31, Chowringhee ..	.. ditto
Williams, P ..	.. Assistant, Thomas Duff & Co, Ld	..	.. 3, Clive Row ..	.. ditto
Williamson, C J ..	.. Reader, Calcutta General Printing Co, Ld	..	.. 300, Bowbazar Street ..	.. ditto
Williamson, Patrick Hay	.. Assistant, Williamson Magor & Co ..	..	.. 4, Mangoe Lane ..	.. ditto
Willis, Arthur Hamilton d'Anyers	.. Broker, Place, Siddons & Gough ..	..	.. 6, Lyons Range ..	.. ditto
Wilson, C D ..	.. Assistant, Balmer Lawrie & Co, Ld	..	.. 103, Clive Street ..	.. ditto
Wilson, E B	.. Assistant, Jessop & Co, Ld ..	..	.. 93, Clive Street ..	.. ditto
Wilson, J W K ..	.. Assistant, Shaw, Wallace & Co ..	..	.. 4, Bankshall Street ..	.. ditto

No.	Names.	Style or calling.	Residence or place of business.	Religion.
	Wilson, William Alfred	Assistant, Bird & Co	1-1, Clive Street	Christian
	Winder, Arther Thomas	Assistant, W J Henley's Telegraph Works Co, Ld	Old Court House Corner	ditto
	Winder, G H	Assistant, Shaw, Wallace & Co	4, Bankshall Street	ditto
	Winslow, A J E	Sub-Accountant, Mercantile Bank of India, Ld	8, Clive Street	ditto
	Wishart, Isaac	Assistant, Macneill & Co	2, Fairlie Place	ditto
	Wishlade, Ralph Sankey	Assistant, Thos Cook & Son, Ld	4, Dalhousie Square	ditto
	Wober, Samuel	Assistant, T E Thomson & Co, Ld	9, Esplanade, East	ditto
	Wollen, W L	Assistant, The Bombay Co, Ld	19, British-Indian Street	ditto
	Wood, Arbuthnot	Assistant, F W Heilgers & Co	1-1, Clive Street	ditto
	Wood, Herbert	Engineer, Chloride Electrical Storage Co, Ld	4, Lyons Range	ditto
	Woodward, G C	Superintendent, Sir Stuart Hogg Market	Sir Stuart Hogg Market	ditto

Woodward, W H	Uncovenanted Staff, Imperial Bank of India	Strand Road		ditto
Wren, S. H.	Electric Inspector, E I R	E I R House		ditto
Wrenham, F G	Sub-Accountant, Chartered Bank of India, Australia & China	1-1, Clive Street		ditto
Wright, H W	Assistant, Lovelock & Lewes	4, Lyons Range		ditto
Wright, James William	Assistant, Roneo, Ld	9, Clive Street		ditto
Wright, Johnston Steel	Assistant, Bengal Chamber of Commerce	2, Clive Street		ditto
Wright, John Wyman, MA	Assistant Master, St Thomas' School	58B, Free School Street		ditto

Y

Yapp, G F	Assistant, Mackinnon, Mackenzie & Co	8, Strand Road		Christian
Yeoman, A S B	Assistant, Turner Morrison & Co, Ld	6, Lyons Range		ditto
Young, George	Assistant, Paterson Engineering Co (India), Ld	2, Dalhousie Square		ditto
Young, P R	Assistant Superintendent, W & W Department, E I R	E I R House		ditto
Young, Reginald Lancelot	Assistant, Thos. Cook & Son, Ld	4, Dalhousie Square		ditto
Young, T B D	Assistant, Geo Henderson & Co, Ld	101-1, Clive Street		ditto

Z

Zachcharia, P G	Assistant, Commercial Intelligence Department	1, Council House Street		Christian
Zorab, E	Assistant, I G N & Ry Co, Ld	Armenian Ghat		ditto
Zurita, Trevelyn Hayward	Measurer, Bengal Chamber of Commerce	2, Clive Street		ditto

No.	Names.	Style or calling.	Residence or place of business.	Religion.
	A			
	Abdul, Hadi, MA	Clerk, C A O's Office, E I R	E I R House	Mahomedan
	Abed, Mahammad	Assistant, Agriculture & Industries Department	Writers' Buildings	ditto
	Achar, Srinivasa Vishnapadachar, BA	Accountant, Ramackers & Co, Ld	7, Old Court House Street	Hindu
	Achar, V Srinivas	Clerk, Prudential Assurance Co, Ld	Clive Buildings	ditto
	Acharya, Chintaharan	Assistant, Calcutta University	Senate House	ditto
	Acharya, Debendra Nath	Assistant, Macneill & Co	2, Fairlie Place	ditto
	Acharya, Kshitish Chandra	Assistant, P G Arts, Calcutta University	Senate House	ditto
	Acharya, Ramrenu, MA, FT	Assistant Master, Hindu School	College Square	ditto
	Acharya, Surendra Nath	Assistant, Office of the Inspector-General of Police, Bengal	Writer's Buildings	ditto
	Adhya, A C	Clerk, Burmah Shell Co of India, Ld	Hongkong House	ditto
	Adhya, Chandra Shekhar	Assistant, Burn & Co, Ld	12, Mission Row	ditto
	Adhya, Gopinath	Cashier, Harrisons & Crosfield, Ld	6, Church Lane	ditto
	Adhya, Jatindra Nath	Assistant, Commercial Intelligence Department	1, Council House Street	ditto
	Adhya, Jugal Kishore	Cashier, Geo Henderson & Co, Ld	101-1, Clive Street	ditto
	Adhya, Kali Charan, BSc, BT	Assistant Master, Hindu School	College Square	ditto
	Adhya, Patitpaban	Assistant, Andrew Yule & Co, Ld	8, Clive Row	ditto
	Adhya, Pramatha Nath	Clerk, Accounts Department, Imperial Bank of India	Strand Road	ditto
	Adhya, Shyam Sundar	Assistant, P & O Banking Corporation, Ld	1, Fairlie Place	ditto
	Aditya, Surendra Nath	Salesman, Indian School Supply Depot	Chittaranjan Avenue, South	ditto

Ahammad, M Fariduddin	Secretary, Usthi Moslem Samity	5, Agamehdi Street, Taltola	Mahomedan
Ahmed, Aftabuddin (Maulvi)	Estimator, Dredger Division	3, Charnock Place	ditto
Ahmed, Anwaruddin (Maulvi)	Assistant, Bengal Secretariat, Police Department	Writers' Buildings	ditto
Ahmed, Asimuddin	Assistant, Office of the Director of Public Instruction, Bengal	Writers' Buildings	ditto
Ahmed, Basiruddin, B.L.	Assistant, A G's Office, Bengal	Treasury Buildings	ditto
Ahmed, Enayet	Mechanical Foreman, P S Office, E I R	E I R House	ditto
Ahmed, Faizuddin	Claims Inspector, E B R	3, Kaylaghat Street	ditto
Ahmed, Golam	Assistant, Office of the Director of Public Instruction, Bengal	Writers' Buildings	ditto
Ahmed, Golam Mahiuddin	Clerk, Collector's Department, Calcutta Corporation	Municipal Office	ditto
Ahmed, Helaluddin (Maulvi)	Head Assistant, Office of the Registrar of Co-operative Societies, Bengal	Writers' Buildings	ditto
Ahmed, Mafizuddin (Quazi), MA	Assessor, Income-Tax Office	6, Esplanade, East	ditto
Ahmed, Mahiuddin	Assistant Accountant, W W, Calcutta Corporation	Municipal Office	ditto
Ahmed, Md Golam, BA	Assessor, Income-tax Office	6, Esplanade East	ditto
Ahmed, Mumtazuddin	Assistant Maulvi, Calcutta Madrasah	19, Wellesley Square	ditto
Ahmed, Mominuddin	Assistant, Bengal Secretariat, P W D	Writers' Buildings	ditto
Ahmed, Muzaffar	Assistant, Office of the Inspector-General of Registration, Bengal	Writers' Buildings	ditto
Ahmed, Nazir, MA	Lecturer, Islamia College	[illegible], Wellesley Street	ditto
Ahmed, Qurban	Lighting Supervisor, Calcutta Corporation	Municipal Office	ditto

No.	Names.	Style or calling.	Residence or place of business.	Religion.
	Ahmed, Rukunuddin (Maulvi), BA	Assistant, Bengal Secretariat Record Room	Writers' Buildings	Mahomedan
	Ahmed, Samiruddin, BA, BT (Maulvi)	Assistant Master, Calcutta Madrasah	19, Wellesley Square	ditto
	Ahmed, Shah Moinuddin ..	Maulvi, Asiatic Society of Bengal	1, Park Street	ditto
	Ahmed, Shamsheruddin ..	Clerk, Photo-Litho Branch, Surveyor-General's Office ..	14, Wood Street	ditto
	Ahmed, Sharafuddin, MA (Maulvi)	Lecturer, Islamia College	8, Wellesley Street	ditto
	Ahmed, Syed Morsheduddin, (Maulvi) BA	Assistant, Bengal Secretariat, Appointment Department ..	Writers' Buildings	ditto
	Ahmed, Syed Nazir	Head Clerk, Islamia College	8, Wellesley Street	ditto
	Ahmed, Syed Nehal	Surveyor, Calcutta Improvement Trust	5, Clive Street	ditto
	Ahmed, Tamizuddin ..	Assistant, Office of the Director of Public Instruction, Bengal ..	Writer's Buildings	ditto.
	Ahmed, Syed Zahiruddin (Maulvi)	Sub-Inspector of Schools, Calcutta (Special)	40-1A, Free School Street	ditto
	Aich, Pankajkumar	Assistant, Controller's Office, Calcutta University	Senate House	Hindu
	Aiyar, Gopal	Clerk, Thos. Cook & Son, Ltd.	4, Dalhousie Square	ditto.
	Aiyar, K R K	Clerk, Shaw, Wallace & Co	4, Bankshall Street	ditto
	Aiyar, N Raghunatha, BA ..	Assistant, Commercial Intelligence Department, India ..	1, Council House Street	ditto
	Aiyar, T Krishnaswamy ..	Stenographer, Bengal Secretariat, Finance Department ..	Writers' Buildings	ditto.
	Aiyar, V Rangaswami ..	Head Clerk, Agent's Office, E B R	3, Kaylaghat Street	ditto
	Alam, Abu Zafer Md. ..	Inspector, Licence Department, Calcutta Corporation ..	Municipal Office	Mahomedan.

Alam, Syed Md Badrul, BA	Lecturer, Ripon College	24, Harrison Road		ditto
Ali, A A Mazahar	Divisional Accountant, A G's Office, Bengal	Treasury Buildings		ditto
Ali, A B M Magfur (Maulvi), BA	Assistant, Bengal Secretariat, Appointment Department	Writers' Buildings		ditto
Ali, Akhtar	Assistant Librarian, Presidency College	86-1, College Street		ditto
Ali, Anser (Maulvi), BA	Assistant, Bengal Secretariat, Appointment Department	Writers' Buildings		ditto
Ali, Arman	Reader, P S Office, E I R	E I R House		ditto
Ali, Kazi Azahar, BL	Assistant, Legislative Department, Bengal	Council House		ditto
Ali, Azim	Clerk, C M E's Office, E I R	E I R House		ditto
Ali, Ghanimat (Maulvi), BSC	Laboratory Assistant, Islamia College	8, Wellesley Street		ditto
Ali, Gholam, BA	Assistant, Bengal Secretariat, Finance Department	Writers' Buildings		ditto
Ali, Hafez, BA	Assistant, Bengal Secretariat, Finance Department	Writers' Buildings		ditto
Ali, Jabed	Assistant Record-Keeper, Calcutta Corporation	Municipal Office		ditto
Ali, Mahabat	Stenographer, Bengal Secretariat, Finance Department	Writers' Buildings		ditto
Ali, Mahomed	Clerk, C M O's Office, E I R	E I R House		ditto
Ali, Mahomed, MA	Lecturer, Ripon College	24, Harrison Road		ditto
Ali, Mahomed	Assistant, Income Tax Office	3, Goverment Place, West		ditto
Ali, Mahomed Arab,	Assistant, Education Department, Bengal Secretariat	Writers' Buildings		ditto
Ali, Mahomed Korban (Maulvi)	Assistant, Bengal Secretariat, L S-G Department	Writers' Buildings		ditto

No.	Names.	Style or calling.	Residence or place of business.	Religion.
	Ali, Mahomed Eusoof	Reader, P S Office, E I R	E I R House	Mahomedan
	Ali, Makbul, BA	Assistant, Accounts Department, Calcutta Corporation	Municipal Office	ditto
	Ali, Md Najib	Accountant, " Star of India "	9, Dharamtala Street	ditto
	Ali, Mukshed (Maulvi)	Assistant, Bengal Secretariat, Appointment Department	Writers' Buildings	ditto
	Ali, Roushan, BA	Inspector of Schools, Calcutta Corporation	Municipal Office	ditto
	Ali, S S	Insurance Broker, Manufacturers' Life Insurance Co	27, Dalhousie Square	ditto
	Ali, S Sikandar	Chief Accountant, Associated British Machine Tool Makers, Ld	6, Old Post Office Street	ditto
	Ali, Sk Irteza	Assistant Maulvi, Imperial Record Department	3, Government Place, West	ditto
	Ali, Syed Hashim	Assistant, Bengal Secretariat, Revenue Department	Writers' Buildings	ditto
	Ali, Syed Sulaiman, BA	Assessor, Income-tax Office	6, Esplanade, East	ditto
	Ali, Syed Wahed	Assistant, Bengal Secretariat, Revenue Department	Writers' Buildings	ditto
	Ali, Zulfikar, B COM	Examiner of Accounts, Income-tax Office	1, Hare Street	ditto
	Amanatullah (Maulvi), BA	Assistant, Bengal Secretariat, Political (Jails) Department	Writers' Buildings	ditto
	Amin, Muhammad Bin, BA	Personal Clerk to Deputy Ex Officer, Calcutta Corporation	Municipal Office	ditto
	Anam, Md Sharful, BA	Record Keeper, Calcutta Corporation	Municipal Office	ditto
	Anand, C G, BA	Assistant, L S Daver & Co.	1 & 2, Old Court House Corner	Hindu
	Anantaiya, S	Clerk, Burmah-Shell Co of India, Ld	Hongkong House	ditto
	Antia, Jehangir Sorabji	Salesman, Muller & Phipps (India), Ld	Avenue House, Chowringhee Square	Zoroastrian

Arnab, Satish Chandra ..	.. Assistant, P & O Banking Corporation, Ld ..	.. 1, Fairlie Place ..	.. Hindu
Arunachalam, T S, BA ..	.. Assistant, Commercial Intelligence Department, India	.. 1, Council House Street ..	.. ditto
Asgar, Mahomed ..	.. Assistant Master, Calcutta Madrasah	.. 19, Wellesley Square ..	.. Mahomedan
Asthana, Srikrishna ..	.. Clerk, C A O's Office, E I R	.. E I R House ..	.. Hindu.
Azam, Mahomed ..	.. 2nd Maulvi, Imperial Record Department ..	.. 3, Government Place, West	.. Mahomedan
Aziz, Md Abdul, BA ..	.. Assistant, Accountant-General's Office, Bengal ..	.. Treasury Buildings ..	.. ditto
Azizuddin, Mahammad	.. Head Clerk, Calcutta Madrasah	.. 19, Wellesley Square ..	.. ditto

B

Badiuzzaman, Sk, Maulvi	.. Travelling Auditor, Office of the Inspector-General of Prisons, Bengal	.. Writers' Buildings ..	.. Mahomedan
Bagchi, Ashutos ..	.. Assistant, Controller's Office, Calcutta University ..	.. Senate House ..	.. Hindu
Bagchi, Bibhuti Bhusan ..	.. Clerk, Shaw, Wallace & Co ..	.. 4, Bankshall Street ..	.. ditto
Bagchi, Girija Shankar	.. S A Superintendent, Drawing Branch, Surveyor-General's Office	13, Wood Street ..	.. ditto
Bagchi, Kshitish Chandra, MA	.. Inspector of Schools, Calcutta Corporation ..	.. Municipal Office ..	.. ditto
Bagchi, Manindra Mohan	.. Assistant, Accountant-General's Office, Bengal ..	.. Treasury Buildings ..	.. ditto
Bagchi, Pravas Chandra	.. Chief Clerk, Bill Section, C E S C, Ld	.. Victoria House ..	.. ditto
Bagchi, Purendra Narayan	.. Electrical Draftsman, Spl Officer's Deptt, Calcutta Corporation	Municipal Office ..	.. ditto
Bagchi, Ramdas ..	.. Clerk, Jardine, Skinner & Co	.. 4, Clive Row ..	.. ditto
Bagla, Birdhi Chand ..	.. Assistant Broker, Bagla & Co	.. 7, Lyons Range ..	.. ditto
Bahadur, Shamsher ..	.. Sub-Head, C A O's Office, E I R	.. E I R House ..	.. ditto

No.	Names.	Style or calling.	Residence or place of business.	Religion.
	Baksh, A	Assistant, Mackinnon, Mackenzie & Co	8, Strand Road	Mahomedan
	Baksh, Maula (Sheikh)	Assistant, Accountant-General's Office, Bengal	Treasury Buildings	ditto
	Baksh, Nabi	Clerk, C O P S Office, E I R	E I R House	ditto
	Bakshi, Abhaya Pada	Clerk, Shaw, Wallace & Co	4, Bankshall Street	Hindu
	Bakshi, Dakshinaranjan	Clerk, Operating Department, E I R	E I R House	ditto
	Bakshi, Jagannath	Assistant, Martin & Co	12, Mission Row	ditto
	Bakshi, Nafar Chandra	Clerk, C A O's Office, E I R	E I R House	ditto
	Bakshi, Santos Chandra	Clerk, C A O's Office, E I R	E I R House	ditto
	Bakshi, Saroj Kumar	Assistant, North British & Mercantile Insurance Co, Ld	101-1, Clive Street	ditto
	Bakshi, Satish Chandra	Clerk, Agent's Office, E I R	E I R House	ditto
	Balial, Radhikaprasad	Clerk, Agent's Office, E I R	E I R House	ditto
	Bamjee, P D	Partner, Dinshaw & Sorabjee	8, Dharamtala Street	Zoroastrian
	Banerji, Ajit Kumar, BA (Cantab)	Assistant, Martin & Co	12, Mission Row	Hindu
	Banarji, A K	Assistant Engineer, G E C (India) Ld	Magnet House, Chittaranjan Avenue (South).	ditto
	Banarji, Akcouri	Clerk, Collection Department, Calcutta Corporation	Municipal Office	ditto
	Banarji, Akshaya Kumar	Assistant, Office of the Commissioner of Income-tax	Imperial Secretariat Buildings	ditto
	Banarji, Amareshwer	Assistant, Surgeon-General's Office, Bengal	Writers' Buildings	ditto
	Banarji, Amrita Lal	Clerk, Acctts. Deptt., Imperial Bank of India	Strand Road	ditto

Banarji, Amrita Lal	Assistant, Macneill & Co	2, Fairlie Place		ditto
Banarji, Amrita Lal	Assistant, Bengal Chemical & Pharmaceutical Works, Ld	31, Chittaranjan Avenue, South		ditto
Banarji, Amulyadhan	Clerk, Gillanders, Arbuthnot & Co	8, Clive Street		ditto
Banarji, Anadi Nath	Clerk, Gillanders, Arbuthnot & Co	8, Clive Street		ditto
Banarji, Ananta Deb	Assistant, Accountant-General's Office, Bengal	Treasury Buildings		ditto
Banarji, Anil Kumar	Assistant, Kodak, Ld	17, Park Street		ditto
Banarji, Ardha Chandra	Assistant, Emigration Office	1, Mission Row		ditto
Banarji, Arun Chandra	Clerk, Harrisons & Crosfield, Ld	6, Church Lane		ditto
Banarji, Asita Mohan	Assistant, Calcutta University	Senate House		ditto
Banarji, Atul Chandra	Assistant, Senda & Co (India) Ld	135, Canning Street		ditto
Banarji, Bagalapada, BA	Assistant, Accountant-General's Office, Bengal	Treasury Buildings		ditto
Banarji, Balaidas	Assistant, Accounts Department, Calcutta Corporation	Municipal Office		ditto
Banarji, Basanta Kumar	Assistant, Controller's Office, Calcutta University	Senate House		ditto
Banarji, Basanta Kumar	Assistant, Office of the Controller of Currency	Treasury Buildings		ditto
Banarji, Basanta Kumar	Clerk, C O P S Office, E I R	E I R House		ditto
Banarji, Basanta Lal	Assistant, Burn & Co Ld	12, Mission Row		ditto
Banarji, B C	Assistant, L. S Daver & Co	1 & 2, Old Court House Corner		ditto
Banarji, Bholanath	Clerk, C O P S Office, E I R	E I R House		ditto
Banarji, Bholanath	Clerk, Sun Life of Canada	12, Dalhousie Square, East.		ditto

No.	Names.	Style or calling.	Residence or place of business.	Religion.
	Banarji, Bhupati Nath ..	.. Assistant, Accountant-General's Office, Bengal ..	.. Treasury Buildings	Hindu
	Banarji, Bhupati Nath ..	.. Assistant, Macneill & Co	.. 2, Fairlie Place	ditto
	Banarji, Bhupendra Lal ..	.. Assistant, Calcutta University	.. Senate House	ditto
	Banarji, Bhupendra Nath	.. 2nd clerk, Presidency College	.. 86-1, College Street	ditto
	Banarji, Bibhuti Bhusan	.. Clerk, Collection Department, Port Commissioners' Office	.. Strand Road	ditto
	Banarji, Bijan Bihari ..	.. Clerk, Surveyor's Department, Calcutta Corporation	.. Municipal Office	ditto
	Banarji, Bijaya Gopal ..	.. Assistant, Andrew Yule & Co, Ld	.. 8, Clive Row	ditto
	Banarji, Bijaya K	.. Assistant, Balmer, Lawrie & Co Ld	.. 103, Clive Street	ditto
	Banarji, Bijaya Kumar ..	.. Estimator, P H D, Bengal	.. 3, Charnock Place	ditto
	Banarji, Bijaya Kumar ..	.. Assistant, Office of the Superintending Engineer, Electrical Circle, Bengal.	Writers' Buildings	ditto
	Banarji, Bijaya Kumar, MA	.. Accountant, Government of India Press ..	.. 8, Hastings Street	ditto
	Banarji, Bimala Charan, BA	.. Clerk, Chief Auditor's Office, E I R	.. E I R House	ditto
	Banarji, Binode Bihari, MA	.. Lecturer, City College	.. 102-1, Amherst Street	ditto
	Banarji, Binode Bihari ..	.. Assistant, Andrew Yule & Co, Ld	.. 8, Clive Row	ditto
	Banarji, Bipin Bihari ..	.. Assistant, Mackinnon, Mackenzie & Co	.. 16, Strand Road	ditto
	Banarji, B K ..	.. Clerk, Heatly & Gresham, Ld	.. 6, Waterloo Street	ditto
	Banarji, B N ..	.. Assistant, Manton & Co	.. 13, Old Court House Street ..	ditto
	Banarji, Brajendra Nath ..	.. Clerk, Office Controller of Army Factory Accounts	6, Esplanade, East	ditto

Banarji, Brajendra Nath	..	Assistant, Accounts Dept, Calcutta Corporation	..	Municipal Office	ditto
Banarji, Chandi Charan	..	Assistant, Office of the Controller of Currency	..	Treasury Buildings	ditto
Banarji, Chandi Charan	..	Assistant, James Finlay & Co, Ld	..	1, Clive Street	ditto
Banarji, Charu Chandra	..	Head Computor, Government of India Press	..	8, Hastings Street	ditto
Banarji, Dasarathi	..	Accounts Clerk, Calcutta Improvement Trust	..	5, Clive Street	ditto
Banarji, Debanga Nath	..	Assistant, Accountant-General's Office, Bengal	..	Treasury Buildings	ditto
Banarji, Debendra Nath	..	Assistant, Office of the Inspector-General of Police, Bengal	..	Writers' Buildings	ditto
Banarji, Debendra Nath	..	Head Clerk, Traffic Department, E B R	..	3, Kaylaghat Street	ditto
Banarji, Debgati	..	Assistant, Income-tax Office	..	6, Esplanade, East	ditto
Banarji, Dhirendra Nath	..	Clerk, *Statesman*, Ld	..	*Statesman* House	ditto
Banarji, Dhirendra Nath, B Sc	..	Sub-Inspector, License Department, Calcutta Corporation	..	Municipal Office	ditto
Banarji, Dhirendra Nath	..	Assistant, Bird & Co	..	1-1, Clive Street	ditto
Banarji, Dulal Chandra	..	Assistant, Calcutta Collectorate	..	3, Charnock Place	ditto
Banarji, Durgadas	..	Clerk, Secretary's Department, Port Commissioners' Office	..	Strand Road	ditto
Banarji, Dwijendra Nath, BA	..	Assistant, Board of Revenue, Bengal	..	Writers' Buildings	ditto
Banarji, Fanibhusan	..	Assistant, J Thomas & Co	..	8, Mission Row	ditto
Banarji, Gangananda	..	Assistant, Accountant-General's Office, Bengal	..	Treasury Buildings	ditto
Banarji, G C	..	Clerk, Burmah-Shell Co of India, Ld	..	Hongkong House	ditto

No.	Names.	Style or calling.	Residence or place of business.	Religion.
	Banarji, Girija Nath	Reader, Government of India Press	8, Hastings Street	Hindu
	Banarji, Girindra Nath	Assistant, Public Health Department, Bengal	Writer's Buildings	ditto
	Banarji, Girindra Nath	Assistant, Army & Navy Stores, Ld	41, Chowringhee	ditto
	Banarji, Girindra Nath	Assistant, Planters' Stores & Agency Co, Ld	11, Clive Street	ditto
	Banarji, Gobin Chandra	Head Clerk, Accident Department, New Zealand Insurance Co, Ld	26, Dalhousie Square	ditto
	Banarji, Gobinda Chandra	Cashier, Octavius Steel & Co, Ld	14, Old Court House Street	ditto
	Banarji, Gobinda Lal, B Sc	Assistant, Accountant-General's Office, Bengal	Treasury Buildings	ditto
	Banarji, Gopal Chandra	Overseer, P H D, Bengal	3, Charnock Place	ditto
	Banarji, Gopal Chandra	Assistant, Bengal Secretariat, Finance Department	Writers' Buildings	ditto
	Banarji, Gorachand, BE, CE	Assistant, Holmes Wilson & Co, Ld	Norton Buildings	ditto
	Banarji, Gurudas, MA	Assistant, Office of the Controller of Currency	Treasury Buildings	ditto
	Banarji, Gurupada	Assistant, Mackinnon, Mackenzie & Co	16, Strand Road	ditto
	Banarji, Haragobinda	Clerk, I B P Co, Ld	8, Clive Street	ditto
	Banarji, Haran Chandra	Stenographer, C E E's Office, E I R	E I R House	ditto
	Banarji, Harendra Nath, BA	Head Assistant (Establishment), Calcutta Corporation	Municipal Office	ditto
	Banarji, Harendra Nath, BA	Assistant, Accountant-General's Office, Bengal	Treasury Buildings	ditto
	Banarji, Harendra Nath	Clerk, Office of the Chief Mining Engineer, Railway Board	1, Council House Street	ditto

Banarji, Harendra Nath	Assistant, Mackinnon, Mackenzie & Co	16, Strand Road		ditto
Banarji, Hari Bhusan	Assistant, Surgeon-General's Office, Bengal	Writers' Buildings		ditto
Banarji, Hari Charan	Assistant, Octavius Steel & Co, Ld	14, Old Court House Street		ditto
Banarji, Haridas	Lecturer, Government Commercial Institute	11, Hastings Street		ditto
Banarji, Haridas	Clerk, Post Audit, Port Commissioners' Office	Strand Road		ditto
Banarji, Haridas	Assistant, Bengal Chamber of Commerce	2, Clive Street		ditto
Banarji, Haridhan	Clerk, Brooke Bond (India), Ld	2, Metcalfe Street		ditto
Banarji, Hari Gopal	Assistant, Andrew Yule & Co, Ld	8, Clive Row		ditto
Banarji, Harihar	Clerk, Shaw, Wallace & Co	4, Bankshall Street		ditto
Banarji, Harikiran	Assistant, F W Heilgers & Co	1-1, Clive Street		ditto
Banarji, Harikumar, MA	Assistant, Bengal Secretariat Record Room	Writers' Buildings		ditto
Banarji, Harimaya	Assistant Record-keeper, Improvement Trust Tribunal	6, Hastings Street		ditto
Banarji, Harimohan, MA	Audit Clerk, E B R	3, Kaylaghat Street		ditto
Banarji, Harimohan	Assistant, Royal Calcutta Turf Club	11, Russell Street		ditto
Banarji, Haripada	Assistant, Bengal Chamber of Commerce	2, Clive Street		ditto
Banarji, Hari Sadhan	Record-keeper, Improvement Trust Tribunal	6, Hastings Street		ditto
Banarji, Harishchandra	Assistant, European Association	17, Stephen Court, Park Street		ditto
Banarji, H K	Clerk, Burmah-Shell Co of India, Ld	Hongkong House		ditto

No.	Names.	Style or calling.	Residence or place of business.	Religion.
	Banarji, H S	Cashier, G E C (India) Ld	Magnet House, Chittaranjan Avenue (South.)	Hindu
	Banarji, Ilabanta, MSc	Lecturer, University College	92, Upper Circular Road	ditto
	Banarji, Jadupati, MA, BT	Assistant Master, Sanskrit Collegiate School	College Square	ditto
	Banarji, James Jatindra	Sales Manager, Lal Chand & Sons	76, Lower Circlar Road	Christian
	Banarji, Janaki Nath, MA	Assistant, Calcutta University	Senate House	Hindu
	Banarji, Jatindra Mohan, BA	Journalist, *Commerce*	303, Bowbazar Street	ditto
	Banarji, Jatindra Mohan, B Com	Accountant, Corporation Workshops	Municipal Office	ditto
	Banarji, Jatindra Nath	Clerk, Shaw, Wallace & Co	4, Bankshall Street	ditto
	Banarji, Jiban Krishna	Head Assistant, Factory Inspection Department	40-1A, Free School Street	ditto
	Banarji, Jiten Kumar	Stenographer, Harrisons & Crosfield, Ld	6, Church Lane	ditto
	Banarji, Jitendra Mohan	Clerk, Bengal Telephone Corporation, Ld	8, Hare Street	ditto
	Banarji, Jitendra Nath	Draftsman (Drawing), Survey of India	13, Wood Street	ditto
	Banarji, Jitendra Nath	Overseer, Western Electrical Division	Writers' Buildings	ditto
	Banarji, Jitendra Nath	Assistant, Accountant-General's Office, Bengal	Treasury Buildings	ditto
	Banarji, Jitendra Nath, MA	Lecturer, University College	Senate House	ditto
	Banarji, Jitendra Nath	Assistant, Andrew Yule & Co, Ld	8, Clive Row	ditto
	Banarji, Jitendra Nath	Assistant, Burn & Co, Ld	12, Mission Row	ditto
	Banarji, J N	Stenographer, Associated Electrical Industries (India), Ld	A-3, Clive Buildings	ditto

Banarji, J N, BA, BL ..	.. Clerk, C A O's Office, E I R	.. E I R House	ditto
Banarji, J N ..	.. Assistant, Loans and Discount, Imperial Bank of India ..	Strand Road	ditto
Banarji, Jnanendra Nath ..	Clerk, P D O, Imperial Bank of India	.. 8, Council House Street	ditto
Banarji, Jogendra Chandra, MSC ..	Laboratory Assistant, University College ..	.. 92, Upper Circular Road	ditto
Banarji, Jogendra Nath, BSC ..	Asstt Analyst, Bengal Public Health Laboratory ..	.. Chittaranjan Avenue	ditto
Banarji, Jogendra Nath ..	Reader, Government of India Press	.. 8, Hastings Street	ditto
Banarji, Jogendra Nath	Assistant, Calcutta University	.. Senate House	ditto
Banarji, Jogendra Nath	Assistant, Walworth International Co	.. 14-2, Clive Row	ditto
Banarji, Jogesh Chandra, BA ..	Assistant, Commercial Intelligence Deptt, India ..	.. 1, Council House Street	ditto
Banarji, Jogeshwar	Clerk, Alliance Assurance Co, Ld	.. 2, Hare Street	ditto
Banarji, Juran Chandra ..	Assistant, Central Stationery Office ..	.. 3, Church Lane	ditto
Banarji, Jyotish Ch. ..	Clerk, Calcutta Improvement Trust	.. 5, Clive Street	ditto
Banarji, Jyotish Chandra ..	Assistant, European Association ..	.. 17, Stephen Court, Park Street ..	ditto
Banarji, Kali Charan	Clerk, C A O's Office, E I R	.. E I R House	ditto
Banarji, Kalidas	Clerk, Secretary's Department, Port Commissioners' Office ..	Strand Road	ditto
Banarji, Kalidas, MA, BL ..	Assistant, Students' Welfare Committee, Calcutta University ..	Senate House	ditto
Banarji, Kaliprasad, BA ..	Assistant, Accountant-General's Office, Bengal ..	.. Treasury Buildings	ditto
Banarji, Kanai Chand	Clerk, Agent's Office, E B R	.. 3, Kaylaghat Street	ditto

No.	Names.	Style or calling.	Residence or place of business.	Religion.
	Banarji, Kanakendra Narayan, M Sc	Examiner of Accounts, I T Office	.. 3, Government Place, West ..	Hindu
	Banarji, Kanti Gopal	Demonstrator, Presidency College	.. 86-1, College Street	ditto
	Banarji, Karunakinkar, BA, BT ..	Assistant Master, Hindu School	.. College Square	ditto
	Banarji, Karunamaya	Assistant, Bird & Co	.. 1-1. Clive Street	ditto
	Banarji, Kiran Chandra	Assistant, Bengal Secretariat, Judicial Department ..	.. Writers' Buildings	ditto
	Banarji, Kiran Chandra	Assistant, Accountant-General's Office, Bengal ..	.. Treasury Buildings	ditto
	Banarji, Kiriti Bhusan	Assistant, Accountant-General's Office, Bengal ..	.. Treasury Buildings	ditto
	Banarji, Krishna Das	Assistant, Accountant-General's Office, Bengal ..	.. Treasury Buildings	ditto
	Banarji, Krishnadhan	Clerk, Traffic Department, E B R	.. 3, Kaylaghat Street	ditto
	Banarji, Krishnaprasad	Assistant, Hoare Miller & Co	.. 5, Fairlie Place	ditto
	Banarji, Kshetradas	Accounts Clerk, C E 's Office, E I R	.. E I R House	ditto
	Banarji, Kshetra Mohan	Assistant, Central Stationery Office	.. 3, Church Lane	ditto
	Banarji, Kshitish Chandra ..	Assistant Claims Inspector, E B R	.. 3, Kaylaghat Street	ditto
	Banarji, Kshetra N	Assistant, F W Heilgers & Co	.. 1-1 Clive Street	ditto
	Banarji, Kuber Chandra	Inspector, Imperial Chemical Industries (India) Ld	.. 18, Strand Road	ditto
	Banarji, Lal Mohan	Accountant, James Luke & Sons	.. 7, Royal Exchange Place ..	ditto
	Banarji, L M	Canvasser, G E C (India) Ld	.. Magnet House, Chittaranjan Avenue (South.)	ditto

Banarji, Madhusudan ..	.. Assistant, Bengal Secretariat, L S-G Department ..	.. Writers' Buildings ..	..	ditto
Banarji, Mahitos ..	.. Clerk, Collection Department, Calcutta Corporation ..	.. Municipal Office ..	..	ditto
Banarji, Makhan Lal ..	.. Assistant, North British & Mercantile Insurance Co, Ld ..	101-1, Clive Street ..	..	ditto
Banarji, Manamohan ..	.. Head Assistant, Superintending Engineer's Office, Electrical Circle, Bengal	Writers' Buildings ..	..	ditto
Banarji, Manamohan ..	.. Assistant, Controller's Office, Calcutta University ..	Senate House ..	..	ditto
Banarji, Manas Nath, MA ..	Manager, Sooresh Chandra Mookerjee & Co ..	.. 11, Raja Woodmunt Street	..	ditto
Banarji, Manindra Lal ..	.. Head Clerk, Imperial Library	.. 6, Esplanade, East ..	..	ditto
Banarji, Manindra Nath ..	Sub-Head, C A O's Office, E I R	.. E I R House ..	..	ditto
Banarji, Manmatha Nath ..	Clerk, Gillanders, Arbuthnot & Co	.. 8, Clive Street ..	..	ditto
Banarji, Manmatha Nath ..	Assistant, Bird & Co	.. 1-1, Clive Street ..	..	ditto
Banarji, Manmatha Nath ..	Clerk, Calcutta Improvement Trust ..	.. 5, Clive Street ..	..	ditto
Banarji, Manmatha Nath ..	Clerk, C A O's Office, E I R	.. E I R House ..	..	ditto
Banarji, Manmatha Nath ..	Cashier, R B Rodda & Co	.. 2, Wellesley Place ..	..	ditto
Banarji, M N ..	.. Assistant, Mackinnon, Mackenzie & Co	.. 16, Strand Road ..	..	Christian
Banarji, M N ..	.. Accounts Clerk, Sulzer Brothers	.. 4, Lyons Range ..	..	Hindu
Banarji, Manindra Nath ..	Chief Clerk, American Foreign Insurance Association ..	15, Clive Row ..	..	ditto
Banarji, Mohit Mohan ..	.. Assistant, Education Department, Bengal Secretariat ..	Writers' Buildings ..	..	ditto
Banarji, Mukteshwar ..	.. Head Draftsman, Engineer's Office, E B R ..	.. 3, Kaylaghat Street ..	..	ditto

No.	Names.	Style or calling.	Residence or place of business.	Religion.
	Banarji, Murali Bhusan, B Sc	Assessing Inspector, Calcutta Corporation	Municipal Office	Hindu
	Banarji, N	Assistant, Barry & Co	2, Fairlie Place	ditto
	Banarji, N	Clerk, Heatly & Gresham, Ld	6, Waterloo Street	ditto
	Banarji, N	Head Clerk, Medical Department, E B R	3, Kaylaghat Street	ditto
	Banarji, Nabendu Kumar	Clerk, P D O, Imperial Bank of India	8, Council House Street	ditto
	Banarji, Nagendra Nath	Assistant, Mackinnon, Mackenzie & Co	16, Strand Road	ditto
	Banarji, Nagendra Nath	Stenographer, Bengal Secretariat, Finance Department	Writers' Buildings	ditto
	Banarji, Nakuleshwar	Clerk, Jardine, Skinner & Co	4, Clive Row	ditto
	Banarji, Nakuleshwar	Assistant, A G's Office, Bengal	Treasury Buildings	ditto
	Banarji, Nakur Krishna	Clerk, Calcutta Stock Exchange Assen, Ld	7, Lyons Range	ditto
	Banarji, Nalini Kanta	Clerk, Turner, Morrison & Co, Ld	6, Lyons Range	ditto
	Banarji, Nalini Kanta	Clerk, Agent's Office, E B R	3, Kaylaghat Street	ditto
	Banarji, Nanda Lal	Assistant, Begg Dunlop & Co, Ld	2, Hare Street	ditto
	Banarji, Nani Gopal	Assistant, Octavius Steel & Co, Ld	14, Old Court House Street	ditto
	Banarji, Nani Gopal	Assistant, Patent Office	1, Council House Street	ditto
	Banarji, Nani Gopal	Clerk, Gillanders, Arbuthnot & Co	8, Clive Street	ditto
	Banarji, Narayan Chandra	Assistant, Andrew Yule & Co, Ld	8, Clive Row	ditto

Banarji, Narendra Nath ..	..	Head Assistant, Office of the Commissioner of Income-tax	.. Imperial Secretariat Buildings	.. ditto
Banarji, Narendra Nath ..	..	Clerk, Office of the Chief Mining Engineer, Railway Board	.. 1, Council House Street ..	.. ditto
Banarji, Narendra Nath	..	Assistant, Ludlow Jute Co, Ld	.. 7, Royal Exchange Place	.. ditto
Banarji, Narendra Nath ..	..	Assistant, Bird & Co	.. 1-1, Clive Street ..	.. ditto
Banarji, Narendra Nath ..	..	Assistant, T E Bevan & Co, Ld	.. Grosvenor House ..	.. ditto
Banarji, Naresh Chandra	..	Nazir, Calcutta Collectorate	.. 3, Charnock Place ..	.. ditto
Banarji, Nilambar ..	..	Assistant, Bengal Chamber of Commerce ..	.. 2, Clive Street ..	.. ditto
Banarji, Nikhil Bhusan ..	..	Assistant, Accountant-General's Office, Bengal ..	.. Treasury Buildings ..	.. ditto
Banarji, Nirad Krishna, MA	..	Assistant, Accountant-General's Office, Bengal ..	.. Treasury Buildings ..	.. ditto
Banarji, Niranjan ..	..	Clerk, Jardine Skinner & Co	.. 4, Clive Row ..	.. ditto
Banarji, Nirmal Chandra, BA	..	Assistant, Central Stationery Office	.. 3, Church Lane ..	.. ditto
Banarji, Nirmal K ..	..	Rent Collector, Calcutta Improvement Trust ..	.. 5, Clive Street ..	.. ditto
Banarji, N N ..	..	Cashier, Remington Rand Inc	.. 3, Council House Street ..	.. ditto
Banarji, Nripendra Chandra, BA	..	Assistant, Accountant-General's Office, Bengal ..	.. Treasury Buildings ..	.. ditto
Banarji, Nripendra Lal	..	Assistant, Calcutta University	.. Senate House ..	.. ditto
Banarji, Nripendra Nath	..	Cashier, Landale & Clark, Ld	.. 11, Clive Street ..	.. ditto
Banarji, Nripendra Nath	..	Clerk, Gillanders Arbuthnot & Co	.. 8, Clive Street ..	.. ditto
Banarji, Nutbihari ..	..	Assistant, Mackinnon, Mackenzie & Co ..	. 16, Strand Road ..	.. ditto

No.	Names.	Style or calling.	Residence or place of business.	Religion.
	Banarji, Panchanan, BA	Assistant, Calcutta University	Senate House	Hindu
	Banarji, Panchanan	Assistant, Accountant-General's Office, Bengal	Treasury Buildings	ditto
	Banarji, Panchanan	Assistant, Commercial Intelligence Department	1, Council House Street	ditto
	Banarji, Panchu Charan	Head Clerk, Mechl Department, E B R	3, Kaylaghat Street	ditto
	Banarji, Paresh Nath	Assistant, Accounts Department, Calcutta Corporation	Municipal Office	ditto
	Banarji, Pashupati	Clerk, C A O's Office, E I R	E I R House	ditto
	Banarji, Phalaram	Assistant, Planters' Stores & Agency Co, Ld	11, Clive Street	ditto
	Banarji, P K	Clerk, Burmah-Shell Co of India, Ld	Hongkong House	ditto
	Banarji, P L	Clerk, Burmah-Shell Co of India, Ld	Hongkong House	ditto
	Banarji, P N	Clerk, Burmah-Shell Co of India, Ld	Hongkong House	ditto
	Banarji, Prabodh Chandra	Steno-typist, Liverpool & London and Globe Insurance Co, Ld	26, Dalhousie Square	ditto
	Banarji, Prafulla Chandra, No I	Assistant, Accountant-General's Office, Bengal	Treasury Buildings	ditto
	Banarji, Prafulla Chandra, No. II	Assistant, Accountant-General's Office, Bengal	Treasury Buildings	ditto
	Banarji, Prafulla Chandra	Assistant, Bengal Secretariat, L S-G Department	Writers' Buildings	ditto
	Banarji, Prafulla Charan (No II), BA	Assistant, Accountant-General's Office, Bengal	Treasury Buildings	ditto
	Banarji, Prakash Chandra, BA	Assistant, Calcutta University	Senate House	ditto
	Banarji, Prakash Chandra	Clerk, R. Sim & Co, Ld	2, Clive Row	ditto

Banarji, Pramatha Nath, MA	Assistant, Bengali Translator's office	Writers' Buildings	ditto		
Banarji, Pratul Chandra	Clerk, Operating Department, E I R	E I R House	ditto		
Banarji, Pravat Kusum	Clerk, Pre-Audit Section, Port Commissioners' Office	Strand Road	ditto		
Banarji, Pulin Bihari	Sub-Head, C A O's Office, E I R	E I R House	ditto		
Banarji, Pulin Bihari	Assistant, Andrew Yule & Co, Ld	8, Clive Row	ditto		
Banarji, Purna Chandra	Assistant, Balmer, Lawrie & Co, Ld	103, Clive Street	ditto		
Banarji, Radhacharan	Clerk, Jardine Skinner & Co	4, Clive Row	ditto		
Banarji, Radhakinkar, BA	Head Reader, Bengal Library	Writers' Buildings	ditto		
Banarji, Radhika Prasanna	Assistant, J Thomas & Co	8, Mission Row	ditto		
Banarji, Rajendra Lal	Clerk, Licensed Measurers Department	2, Clive Street	ditto		
Banarji, Ramapada	Assistant, Price, Waterhouse, Peat & Co	B-4, Clive Buildings	ditto		
Banarji, Ramchandra	Clerk, Govt Account, Imperial Bank of India	Strand Road	ditto		
Banarji, Rameshwar	Clerk, Turner, Morrison & Co, Ld	6, Lyons Range	ditto		
Banarji, R C	Clerk, Calcutta Mint	47, Strand Road	ditto		
Banarji, R N	Stenographer and Librarian, Y M C A	86, College Street	Christian		
Banarji, Sachidananda	Head Clerk, Jardine Skinner & Co	4, Clive Row	Hindu		
Banarji, Sanjiban	Clerk, Mercantile Bank of India, Ld	8, Clive Street	ditto		

No.	Names.	Style or calling.	Residence or place of business.	Religion.
	Banarji, Santos Kumar ..	.. Cashier, Commercial Intelligence Department, India	.. 1, Council House Street ..	.. Hindu
	Banarji, Santos Kumar	.. Clerk, Pre-Audit Section, Port Commissioners' Office	.. Strand Road ..	.. ditto
	Banarji, Santos Kumar	.. Stenographer, Office of His Majesty's Senior Trade Commissioner in India.	4, Fairlie Place ..	.. ditto
	Banarji, Santos Kumar	.. Clerk, C A O's Office, E I R	.. E I R House ..	.. ditto
	Banarji, Santos Kumar	.. Clerk, Lloyds Bank, Ld	.. 101-1, Clive Street ..	.. ditto
	Banarji, Saroj Nath, MA	.. Assistant, A-G's Office, Bengal	.. Treasury Buildings ..	.. ditto
	Banarji, Satish Chandra ..	.. Assistant, Bengal Secretariat, Judicial Department ..	.. Writers' Buildings ..	.. ditto
	Banarji, Satish Chandra ..	.. Assistant, Hamilton & Co, Ld	.. 8, Old Court House Street	.. ditto
	Banarji, Satish Chandra, BL	.. Inspector, License Department, Calcutta Corporation	.. Municipal Office ..	.. ditto
	Banarji, Satish Chandra, BA	.. Assistant, Income-tax Office	.. 3, Government Place, West	.. ditto
	Banarji, Satish Chandra, BA	.. Stenographer and Junior Council Reporter	.. Writers' Buildings ..	.. ditto
	Banarji, Satish Chandra ..	.. Assistant, Central Despatch Office, Bengal Secretariat	.. Writers' Buildings ..	.. ditto
	Banarji, Satish Chandra ..	.. Assistant, Calcutta University	.. Senate House ..	.. ditto
	Banarji, Satkari ..	.. Assistant, Bengal Chamber of Commerce	.. 2, Clive Street ..	.. ditto
	Banarji, Satya Charan ..	.. Head Clerk, Government Commercial Institute	.. 11, Hastings Street ..	.. ditto
	Banarji, Satya Charan ..	.. Assistant, Price, Waterhouse, Peat & Co	.. B-4, Clive Buildings ..	.. ditto
	Banarji, Satya Kinkar, BA	.. Assistant, Calcutta University	Senate House ..	.. ditto

Banarji, S C	Assistant, Barry & Co	2, Fairlie Place	ditto
Banarji, S C	Reader, P S Office, E I R	E I R House	ditto
Banarji, Shachindra Lal	Clerk, Poppe Delius & Co	2 & 3, Clive Row	ditto
Banarji, Shachindra Nath, MSC	Lecturer, Ripon College	24, Harrison Road	ditto
Banarji, Shachindra Nath	Cashier, Hoare Miller & Co, Ld	5, Fairlie Place	ditto
Banarji, Shailendra Nath	Lighting Inspector, Calcutta Corporation	Municipal Office	ditto
Banarji, Shailendra Nath	Engineer, English Electric Co, Ld	D-4, Clive Buildings	ditto
Banarji, Shailendra Nath	Clerk, Calcutta Corporation, Dist II	22, Mirzapore Street	ditto
Banarji, Sharat Chandra	Assistant, Balmer, Lawrie & Co, Ld	103, Clive Street	ditto
Banarji, Sharat Chandra	Assistant, Burn & Co. Ld	12, Mission Row	ditto
Banarji, Sharat Kumar, BSC	Assistant Analyst, Bengal Public Health Laboratory	Chittaranjan Avenue	ditto
Banarji, Shashi Bhusan	Head Clerk, Botanical Survey of India	Indian Museum	ditto
Banarji, Shibkrishna, BA	Assistant, Accountant-General's Office, Bengal	Treasury Buildings	ditto
Banarji, Shibdayal	Assistant, Burn & Co, Ld	12, Mission Row	ditto
Banarji, Shib Narayan	Assistant, Legislative Department, Bengal	Council House	ditto
Banarji, Shyamapada	Head Assistant (Coal Shipping), Macneill & Co	2, Fairlie Place	ditto
Banarji, Shyamlal	Assistant, Office of the Inspector-General of Prisons, Bengal	Writers' Buildings	ditto
Banarji, Sivamoy, BSC	Assistant, Patent Office	1, Council House Street	ditto
Banarji, Sivanarayan	Assistant, Indian Stores Department (Inspection)	6, Esplanade, East	ditto

No.	Names.	Style or calling.	Residence or place of business.	Religion
	Banarji, S K ..	.. Assistant, Queensland Insurance Co, Ld ..	.. 6, Royal Exchange Place ..	Hindu
	Banarji, S N ..	.. Clerk, C E S C, Ld	.. Victoria House	ditto
	Banarji, Sourendra Mohan	.. Demonstrator, Presidency College	.. 86-1, College Street	ditto
	Banarji, Subodh Chandra	.. Assistant, Bird & Co	.. 1-1, Clive Street	ditto
	Banarji, Subodh Chandra	.. Assistant, Accountant-General's Office, Bengal ..	.. Treasury Buildings	ditto
	Banarji, Sudhir Chandra	.. Computor, Govt of India Press	.. 8, Hastings Street	ditto
	Banarji, Sudhir Kumar	.. Assistant, Accountant-General's Office, Bengal ..	.. Treasury Buildings	ditto
	Banarji, Sudhir Kumar, MSc	.. Demonstrator, Scottish Churches College ..	.. 4, Cornwallis Square	ditto
	Banarji, Sudhir Kumar, BA	.. Assistant, Engineer's Office, District No II, Calcutta Corporation	22, Mirzapore Street	ditto
	Banarji, Sudhir Kumar	.. Assistant, Macneill & Co	.. 2, Fairlie Place	ditto
	Banarji, Sudhirlal ..	.. Accounts Clerk, Calcutta Improvement Trust ..	.. 5, Clive Street	ditto
	Banarji, Surendra Chandra	.. Surveyor and Draftsman, Calcutta Corporation ..	.. Municipal Office	ditto
	Banarji, Surendra Krishna	.. Assistant, Office of the I-G of the Registration, Bengal	.. Writers' Buildings	ditto
	Banarji, Surendra Mohan	.. Assistant, Mackinnon, Mackenzie & Co ..	.. 16, Strand Road	ditto
	Banarji, Surendra Nath ..	.. Cash Keeper, St Thomas' School	.. 58-B, Free School Street	ditto
	Banarji, Surendra Nath ..	.. Clerk, Harrisons & Crosfield, Ld	.. 6, Church Lane	ditto
	Banarji, Surendra Nath ..	.. Assistant, Bengal Secretariat, Finance Department	.. Writers' Buildings	ditto

Banarji, Surendra Nath, No I	..	Assistant, Office of the Director of Public Instruction, Bengal	..	Writers' Buildings	.. .. ditto
Banarji, Surendra Nath, No II	..	Assistant, Office of the Director of Public Instruction, Bengal	..	Writers' Buildings	.. .. ditto
Banarji, Surendra Nath	..	Assistant, Andrew Yule & Co, Ld	..	8, Clive Row	.. .. ditto
Banarji, Surendra Nath	..	Senior Typist, Board of Revenue, Bengal	..	Writers' Buildings	.. .. ditto
Banarji, Surendra Nath, MA	..	Demonstrator, Ripon College	..	24, Harrison Road	.. .. ditto
Banarji, Surendra Nath, No I	..	Assistant, Mackinnon, Mackenzie & Co	..	16, Strand Road	.. .. ditto
Banarji, Surendra Nath, No II	..	Assistant, Mackinnon, Mackenzie & Co	..	16, Strand Road	.. .. ditto
Banarji, Suresh Chandra	..	Clerk, C O P S Office, E I R	..	E I R House	.. .. ditto
Banarji, Suresh Chandra	..	Clerk, Calcutta Improvement Trust	..	5, Clive Street	.. .. ditto
Banarji, Suresh Chandra	..	C O Inspector, E B R	..	3, Kaylaghat Street	.. .. ditto
Banarji, Suresh Chandra	..	Clerk, C A O's Office, E I R	..	E I R House	.. .. ditto
Banarji, Suresh Chandra, BA	..	Head Assistant, Bengal Secretariat, Record Room ..	..	Writers' Buildings	.. .. ditto
Banarji, Surjya Narayan (*Rai Sahib*)		General Assistant, C M E's Office, E I R ..	..	E I R House	.. .. ditto
Banarji, Sushil Chandra, BA	..	Assistant, Accountant-General's Office, Bengal ..	..	Treasury Buildings	.. .. ditto
Banarji, Sushil Chandra	..	Assistant, Controller's Office, Calcutta University ..	..	Senate House	.. .. ditto
Banarji, Sushil Krishna ..	..	Surveyor and Estimator, Calcutta Corporation ..	..	Municipal Office	.. .. ditto
Banarji, Sushil Kumar, BA	..	Inspector, License Department, Calcutta Corporation	..	Municipal Office	.. .. ditto
Banarji, Tarakdas ..	..	Assistant, Accountant-General's Office, Bengal ..	..	Treasury Buildings	.. .. ditto

No.	Names.	Style or calling.	Residence or place of business.	Religion.
	Banarji, Tarapada	Clerk, Shaw, Wallace & Co	4, Bankshall Street	Hindu
	Banarji, Tarapada	Assistant, Calcutta University	Senate House	ditto
	Banarji, Tinkari, BA	Assistant, Accountant-General's Office, Bengal	Treasury Buildings	ditto
	Banarji, Tinkari	Clerk, C O S Office, E I R	E I R House	ditto
	Banarji, Tulsi Charan	Clerk, Pre-Audit Section, Port Commissioners' Office ..	Strand Road	ditto
	Baqui, Abdul (Maulvi), MA ..	Lecturer, Islamia College	8, Wellesley Street	Mahomedan
	Baqui, Fazlur Rahman, MA ..	Lecturer, Calcutta University	Senate House	ditto
	Baral, Bishwanath	Assistant, Lovelock & Lewes	4, Lyons Range	Hindu
	Baral, Deb Bhusan	Book-keeper, Jardine Skinner & Co	4, Clive Row	ditto
	Baral, Gopeshwar	Clerk, Gillanders, Arbuthnot & Co	8, Clive Street	ditto
	Baral, Manick Lal	Clerk, W. Newman & Co, Ld	3, Old Court House Street ..	ditto
	Baral, Nritya Gopal	Assistant, Lovelock & Lewes	4, Lyons Range	ditto
	Baral, Shashi Bhusan	Cashier, G Atherton & Co (Eastern), Ld	8, Clive Street	ditto
	Barat, Krishnapada	Assistant, Income-tax Office	6, Esplanade, East	ditto
	Bardhan, Jashoda Kishore ..	Head Assistant, Office of the Superintending Engineer, S Circle, P W D	3, Government Place, West ..	ditto
	Bari, Abdul (Maulvi)	Assistant, Bengal Secretariat, Appointment Department ..	Writers' Buildings	Mahomedan
	Barman, Manik Chandra ..	Clerk, C O P S Office, E I R	E I R House	Hindu

Barman, Shachindra Mohan, MSC, BL	Supervisor, Mathematical Instrument Office	15, Wood Street	ditto
Barnabas, Marandi	Clerk, C M E's Office, E I R	E I R House	ditto
Barua, U C	Assistant, Oriental Govt Security Life Assurance Co, Ld ..	2, Clive Row	ditto
Bary, M A	Sub-Divisional Officer, Engineer's Office, E B R	3, Kaylaghat Street	Mahomedan
Basak, Ahindra Kumar, MA ..	Inspector, Collection Department, Calcutta Corporation ..	Municipal Office	Hindu
Basak, Balai Chand	Accountant, Hoare Miller & Co, Ld	5, Fairlie Place	ditto
Basak, Bhupendra Nath, MSC ..	Demonstrator, Scottish Churches College	4, Cornwallis Square	ditto
Basak, Brindaban Chandra ..	Assistant, Office of the Superintending Engineer, P W D, Presidency Circle	Writers Buildings	ditto
Basak, Dhirendra Kumar, BSC ..	Assistant, Accountant-General's Office, Bengal	Treasury Buildings	ditto
Basak, D K	Manager, M N Gangooly & Son	14, Shankar Haldar's Lane ..	ditto
Basak, Jahar Lal	Clerk, Commercial Union Assurance Co, Ld	32, Dalhousie Square	ditto
Basak, Lal Bihari	Assistant, Union Insurance Society of Canton, Ld	8, Clive Street	ditto
Basak, Manamohan	Clerk, *Statesman*, Ld	*Statesman* House	ditto
Basak, Manamohan	Cahsier, James Murray & Co	5, Old Court House Street ..	ditto
Basak, Murari Mohan	Assistant, Andrew, Yule & Co, Ld	8, Clive Row	ditto
Basak, Niranjan	Head Clerk, Steiners, Ld	A-3, Clive Buildings	ditto
Basak, Samarendra Nath ..	Supervisor, P H D, Bengal	3, Charnock Place	ditto
Basharatullah, Md	Head Maulvi, Calcutta Madrasah	19, Wellesley Square	Mahomedan

No.	Names.	Style or calling.	Residence or place of business.	Religion.
	Basu, Abala Kanta ..	.. Assistant, Bird & Co	.. 1-1, Clive Street ..	.. Hindu
	Basu, Abanishwar, BL ..	.. Assessing Inspector, Calcutta Corporation ..	.. Municipal Office ..	.. ditto
	Basu, Abhaya Pada ..	.. Clerk, Union Insurance Society of Canton, Ld ..	.. 8, Clive Street ..	.. ditto
	Basu, Abhaya Pada ..	.. Salesman, Symonds & Co	.. 11, Clive Street ..	.. ditto
	Basu, Ajit Kumar, BA ..	.. Examiner of Accounts, Income-tax Office ..	.. 6, Esplanade, East ..	.. ditto
	Basu, Akshaya Kumar ..	.. Assistant, F W Heilgers & Co	.. 1-1, Clive Street ..	.. ditto
	Basu, Akshaya Kumar ..	.. Head Clerk, Calcutta Improvement Trust ..	.. 5, Clive Street ..	.. ditto
	Basu, Amala Nath ..	.. Clerk, Mercantile Bank of India, Ld	.. 8, Clive Street ..	.. ditto
	Basu, Amar Krishna ..	.. Head Clerk, Marconi Co, Ld	.. 6, Old Post Office Street ..	.. ditto
	Basu, Amulya Charan, B com ..	Senior Audit Assistant, Tarmaster & Co ..	.. 6, Old Post Office Street ..	.. ditto
	Basu, Annada Charan ..	.. Inspector, License Department, Calcutta Corporation	.. Municipal Office ..	.. ditto
	Basu, Anukul Chandra ..	.. Assistant, Royal Calcutta Turf Club	.. 11, Russell Street ..	.. ditto
	Basu, Arunodaya ..	.. Chief Clerk, C O P S Office, E I R	.. E I R House ..	.. ditto
	Basu, Atul Chandra ..	.. Accounts Clerk, E B R	.. 3, Kaylaghat Street ..	.. ditto
	Basu, Atul Krishna ..	.. Assistant, Mackinnon, Mackenzie & Co	.. 16, Strand Road ..	.. ditto
	Basu, Bansadhar, BA ..	.. Assistant, Bengal Secretariat, Revenue Department ..	.. Writers' Buildings ..	.. ditto

Basu, Basanta K	..	Assistant, Grahams Trading Co (India), Ld	..	6, Lyons Range .. .. ditto
Basu, B. C.	..	Clerk, P. S. Office, E I R	..	E I R House .. .. ditto
Basu, Bhawani Kinkar, MA, BL	..	Clerk, Office of the Controller of Army Factory Accounts	..	6, Esplanade, East .. .. ditto
Basu, Bhudeb Shankar	..	Chief Clerk, C E S C, Ld	..	Victoria House .. .. ditto
Basu, Bhupendra Nath	..	Assistant, Begg, Dunlop & Co, Ld	..	2, Hare Street .. .. ditto
Basu, Bhutnath	..	Assistant, Central Stationery Office	..	3, Church Lane .. .. ditto
Basu, Bibhas Chandra	..	Assistant, Accountant-General's Office, Bengal ..	..	Treasury Buildings .. .. ditto
Basu, Bijali Bhusan	..	Assistant Superintendent, Accounts Office, E B R ..	..	3, Kaylaghat Street .. .. ditto
Basu, Bijalinath	..	Stenographer, National City Bank of New York ..	..	4, Clive Street .. .. ditto
Basu, Bijaya Krishna	..	Assistant, Central Stationery Office	..	3, Church Lane .. .. ditto
Basu, Bijaya Krishna	..	Clerk, C E's Office, E I R	..	E I R House .. .. ditto
Basu, Binaya Krishna	..	Clerk, Calcutta Improvement Trust	..	5, Clive Street .. .. ditto
Basu, B K	..	Clerk, Burmah-Shell Co of India, Ld	..	Hongkong House .. .. ditto
Basu, B K	..	Assistant, Imperial Record Department ..	..	3, Government Place, West .. ditto
Basu, Braja Gopal	..	Clerk, Booking Section, Port Commissioners' Office	..	Strand Road .. .. ditto
Basu, Budhadeb, MA	..	Lecturer, Ripon College	..	24, Harrison Road .. .. ditto
Basu, Chaiu Chandra, BA, ET	..	Lecturer, Teachers' Training College, Calcutta Corporation	..	1, Wellington Square .. .. ditto
Basu, Debendra Nath, BSC	..	Salesman, Adair Dutt & Co, Ld	..	5, Dalhousie Square .. .. ditto

No.	Names.	Style or calling.	Residence or place of business.	Religion.
	Basu, Dhirendra Kumar ..	Surveyor, Calcutta Improvement Trust ..	.. 5, Clive Street ..	.. Hindu
	Basu, Dhirendra Nath	Accountant, Unique Assurance Co, Ld	.. 10, Canning Street ..	.. ditto
	Basu, Dhirendra Nath	Assistant, Andrew Yule & Co, Ld	.. 8, Clive Row ..	.. ditto
	Basu, Dhirendra Nath, MA ..	Assistant, Board of Revenue, Bengal	.. Writers' Buildings ..	.. ditto
	Basu, Digindra Nath	Assistant, Bengal Chemical & Pharmaceutical Works, Ld	.. 31, Chittaranjan Avenue, South	.. ditto
	Basu, Dwijendra Chandra ..	Assistant, Government of India Press	.. 8, Hastings Street ..	.. ditto
	Basu, Dwijendra Nath	Assistant, Accountant-General's Office, Bengal ..	.. Treasury Buildings ..	.. ditto
	Basu, Dwijendra Nath, B SC ..	Clerk, Army Factory Accounts	.. 6, Esplanade, East ..	.. ditto
	Basu, Ekkari	Assistant, Bengal Secretariat, Political Department	.. Writers' Buildings ..	.. ditto
	Basu, G N	Clerk, C E S C, Ld	.. Victoria House ..	.. ditto
	Basu, Gobardhan	Assistant, Accountant-General's Office, Bengal ..	.. Treasury Buildings ..	.. ditto
	Basu, Gobordhan	Assistant Accountant, Lighting, Calcutta Corporation	.. Municipal Office ..	.. ditto
	Basu, Gopendra Nath	Assistant, James, Finlay & Co, Ld	.. 1, Clive Street ..	.. ditto
	Basu, Gostha Bihari	Assistant, Balmer, Lawrie & Co, Ld	.. 103, Clive Street ..	.. ditto
	Basu, Haradhan	Clerk, Imperial Tobacco Co of India, Ld	.. 37, Chowringhee ..	.. ditto
	Basu, Harendra Mohan	Assistant, Accountant-General's Office, Bengal ..	.. Treasury Buildings ..	.. ditto
	Basu, Haribilas	Overseer, Workshop Electrical Division	.. Writers' Buildings ..	.. ditto

Basu, Haridas ..	.. Accounts Clerk, E B R	.. 3, Kaylaghat Street ..	..	ditto
Basu, Haridas ..	.. Assistant, Accountant-General's Office, Bengal ..	.. Treasury Buildings ..	..	ditto
Basu, Hari Pada, BA, BT	.. Assistant Head Master, Hare School	.. 87, College Street ..	..	ditto
Basu, Haripada ..	.. Reader, Government of India Press	.. 8, Hastings Street ..	..	ditto
Basu, Hem Chandra ..	.. Assistant, Commercial Intelligence Department ..	.. 1, Council House Street	..	ditto
Basu, Hiralal ..	.. Shipping Clerk, Williamson, Magor & Co ..	.. 4, Mangoe Lane ..	..	ditto
Basu, Hirendra Kumar ..	.. Assistant, Commercial Intelligence Department ..	.. 1, Council House Street	..	ditto
Basu, H K ..	.. W W Overseer, Calcutta Improvement Trust ..	.. 5, Clive Street ..	..	ditto
Basu, H N ..	.. Assistant, Don, Watson & Co	.. 4, Lyons Range ..	..	ditto
Basu, Hrisikesh ..	.. Assistant, Lipton, Ld	.. 9, Weston Street ..	..	ditto
Basu, Indu Bhusan, MA, BL	.. Assistant, Bengali Translator's Office	.. Writers' Buildings ..	..	ditto
Basu, Indu Bhusan ..	.. Assistant, Bengal Secretariat, Accounts Department	.. Writers' Buildings ..	..	ditto
Basu, Jagat Durlav ..	.. Clerk, National City Bank of New York ..	.. 4, Clive Street ..	..	ditto
Basu, Jahar Lal ..	.. Accountant, The Indian School Supply Depot ..	.. Central Avenue, South ..	..	ditto
Basu, Jamini Kanta ..	.. Clerk, Royal Insurance Co, Ld	.. 26 & 27, Dalhousie Square	..	ditto
Basu, Jatindra Mohan ..	.. Assistant, Office of the Director of Industries, Bengal	.. 40-1A, Free School Street	..	ditto
Basu, Jatindra Nath ..	.. Levlg Surveyor, Special Officer's Deptt, Calcutta Corporation	.. Municipal Office ..	..	ditto

No.	Names.	Style or calling.	Residence or place of business.	Religion.
	Basu, Jatindra Nath ..	Assistant, Royal Insurance Co, Ld	.. 26 & 27, Dalhousie Square ..	Hindu
	Basu, Jatindra Nath ..	.. Draftsman, Surveyor-General's Office	.. 13, Wood Street	ditto
	Basu, Jishnu Kumar ..	.. Steno-Typist, Scottish Churches College ..	.. 4, Cornwallis Square	ditto
	Basu, Jitendra Nath ..	.. Clerk, Union Insurance Society of Canton, Ld ..	.. 8, Clive Street	ditto
	Basu, J N ..	.. Salesman, Remington Rand Inc	.. 3, Council House Street ..	ditto
	Basu, Jogendra Nath ..	.. Assistant Accountant, English Electric Co, Ld ..	.. D-4, Clive Buildings	ditto
	Basu, Jogesh Chandra ..	.. Ledgerkeeper, Bombay Co, Ld	.. 19, British Indian Street ..	ditto
	Basu, Jyotish Chandra, BA	.. Clerk, Office of the Controller of Army Factory Accounts	.. 6, Esplanade, East	ditto
	Basu, Jyotish Chandra ..	.. Assistant, Lionel Edwards, Ld	.. D-1, Clive Buildings	ditto
	Basu, Jyotish Chandra ..	.. Inspector, Collection Department, Calcutta Corporation	.. Municipal Office	ditto
	Basu, Kalidas ..	.. Shipping Clerk, Williamson, Magor & Co ..	.. 4, Mangoe Lane	ditto
	Basu, Kali Kumar ..	.. Electric Inspector, Calcutta Corporation ..	.. Municipal Office	ditto
	Basu, Kalipada ..	.. Clerk, Lloyds Bank, Ld	.. 101-1, Clive Street	ditto
	Basu, Kashinath ..	.. Clerk, Calcutta Improvement Trust	.. 5, Clive Street	ditto
	Basu, Khagendra Krishna	.. Clerk, Imperial Tobacco Co of India, Ld ..	.. 37, Chowringhee	ditto
	Basu, Khagesh Chandra	.. Lecturer, Sanskrit College	.. College Square	ditto
	Basu, K K ..	.. Clerk, Burmah-Shell Co of India, Ld	.. Hongkong House	ditto

Basu, Krishnadas	..	Clerk, Mathematical Instrument Office	..	15, Wood Street	ditto
Basu, Krishna Lal	..	Assistant, Balmer, Lawrie & Co, Ld	..	103, Clive Street	ditto
Basu, Kshitindra Nath	..	Assistant, Income-tax Office	..	1, Hare Street	ditto
Basu, Kumar Krishna	..	Assistant, Office of the Director of Public Instruction, Bengal	..	Writers' Buildings	ditto
Basu, Kumud Kumar	..	Assistant, Imperial Library	..	6, Esplanade, East	ditto
Basu, Kumudprasad	..	Assistant, Controller's Office, Calcutta University	..	Senate House	ditto
Basu, Lalbihari	..	Cashier, Thos Cook & Son	..	4, Dalhousie Square	ditto
Basu, Lalit Mohan	..	Stenographer, Surveyor's Deptt, Calcutta Corporation	..	Municipal Office	ditto
Basu, Mahendra Nath	..	Assistant, Bird & Co	..	1-1, Clive Street	ditto
Basu, Manaranjan	..	Erector, Jewell Export Filter Co Inc	..	10, Clive Street	ditto
Basu, Manindra Chandra	..	Assistant, Calcutta University	..	Senate House	ditto
Basu, Manindra Kumar	..	Assistant, Calcutta University	..	Senate House	ditto
Basu, Manindra Mohan, MA	..	Lecturer, University College ..	..	Senate House	ditto
Basu, Manindra Nath	..	Assistant, Balmer, Lawrie & Co, Ld	..	103, Clive Street	ditto
Basu, Manindra Nath	..	Clerk, Calcutta Improvement Trust	..	5, Clive Street	ditto
Basu, Manindra Nath	..	Stenographer, Harrisons & Crosfield, Ld	..	6, Church Lane	ditto
Basu, Manindra Nath	..	Head Draftsman, C R E's Office, P & A District	..	Fort William	ditto

No.	Names.	Style or calling.	Residence or place of business.	Religion.
	Basu, Manindra Nath ..	.. Accountant, Calcutta Collectorate	3, Charnock Place	Hindu
	Basu, Manindra Nath ..	.. Clerk, Gillanders, Arbuthnot & Co	8, Clive Street	ditto
	Basu, Manindra Nath ..	.. Assistant Manager, Parry's Engineering, Ld	10, Clive Row	ditto
	Basu, Manmatha Nath ..	.. Assistant, Office of the Director of Industries, Bengal ..	40-1A, Free School Street ..	ditto
	Basu, Manoj Kumar ..	.. Assistant, Office of the Inspector-General of Registration, Bengal	Writers' Buildings	ditto
	Basu, Nagendra Mohan ..	.. Assistant, Surgeon-General's Office, Bengal	Writers' Buildings	ditto
	Basu, Nalin Coomar ..	.. Journalist, *Statesman*, Ld	*Statesman* House	ditto
	Basu, Narayan Ch ..	.. Clerk, Chief Auditor's Office, E I R	E I R House	ditto
	Basu, Narayan Chandra, BA	.. Clerk, City Architect's Deptt, Calcutta Corporation ..	Municipal Office	ditto
	Basu, Narayan Das ..	.. Estimator, Office of the Executive Engineer, Suburban Division, P W D	Writers' Buildings	ditto
	Basu, Narayan Prasad ..	.. Dy Cashier, Shaw Wallace & Co	4, Bankshall Street	ditto
	Basu, Narendra Krishna	.. Assistant, Royal Insurance Co, Ld	26 & 27, Dalhousie Square ..	ditto
	Basu, Narendra Nath ..	.. Store-keeper, Birkmyre Brothers	6, Clive Row	ditto
	Basu, Narendra Nath, BA	.. Assistant, Accountant-General's Office, Bengal	Treasury Buildings	ditto
	Basu, Naresh Chandra ..	.. Stenographer, Calcutta Improvement Trust	5, Clive Street	ditto
	Basu, Nirendra Nath ..	.. Assistant, Accountant-General's Office, Bengal ..	Treasury Buildings	ditto

Basu, N K (Sr)	..	Clerk, Heatly & Gresham, Ld	..	6, Waterloo Street	ditto
Basu, N K (Jr)	..	Clerk, Heatly & Gresham, Ld	..	6, Waterloo Street	ditto
Basu, N L	..	Shipping Clerk, Government Shipping Office	..	15-1, Strand Road	ditto
Basu, Nripendra Krishna	..	Clerk, Place, Siddons and Gough	..	6, Lyons Range	ditto
Basu, Nripendra Nath	..	Accounts Clerk, Lipton, Ld	..	9, Weston Street	ditto
Basu, Nripendra Nath, MSC	..	Offg. Head Assistant, Surveyor-General's Office	..	13, Wood Street	ditto
Basu, Panchanan	..	Clerk, Mercantile Bank of India, Ld	..	8, Clive Street	ditto
Basu, Panna Lal	..	Assistant, Surgeon-General's Office, Bengal	..	Writers' Buildings	ditto
Basu, Phanindra Nath	..	Clerk, National Bank of India, Ld	..	104, Clive Street	ditto
Basu, P N	..	Assistant, Guest, Keen, Williams, Ld	..	7, Council House Street	ditto
Basu, Prabodh, BA	..	Articled Clerk, Tarmaster & Co	..	6, Old Post Office Street	ditto
Basu, Prabodh Chandra	..	Canvasser, Liverpool & London & Globe Insurance Co, Ld	..	26, Dalhousie Square	ditto
Basu, Prabodh Chandra	..	Assistant, Royal Insurance Co, Ld	..	26 & 27, Dalhousie Square	ditto
Basu, Prabodh Chandra	..	Stenographer, Thos Cook & Son, Ld	..	4, Dalhousie Square	ditto
Basu, Prafulla Chandra, BL	..	Assistant, Bengal Secretariat, Acctts Department	..	Writers' Buildings	ditto
Basu, Prafulla K	..	C O Inspector, E B R	..	3, Kaylaghat Street	ditto
Basu, Prafulla Kumar	..	Stenographer, Bengal Secretariat, Finance Department	..	Writers' Buildings	ditto

No.	Names.	Style or calling.	Residence or place of business.	Religion.
	Basu, Prafulla Kumar ..	.. Assistant, University College	.. 92, Upper Circular Road ..	Hindu
	Basu, Pramatha Nath ..	.. Prover, Photo-Litho Branch, Surveyor-General's Office	.. 14, Wood Street	ditto
	Basu, Pramatha Nath ..	.. Head Clerk, Stores Deptt, E B R	.. 3, Kaylaghat Street	ditto
	Basu, Pramatha Nath ..	.. Assistant, Bengal Secretariat, Accounts Department	.. Writers' Buildings	ditto
	Basu, Pratap Chandra ..	.. Assistant, Controller's Office, Calcutta University ..	.. Senate House	ditto
	Basu, Pravas Chandra ..	.. Clerk, Lloyds Bank, Ld	.. 101-1, Clive Street	ditto
	Basu, Pravas Chandra ..	.. Assistant, Office of the Inspector-General of Police	.. Writers' Buildings	ditto
	Basu, Pravas Kanta ..	.. Clerk, C O S Office, E I R	.. E I R House	ditto
	Basu, P S, BSc ..	.. Head Clerk, Superintendent's Office	.. Sir Stuart Hogg Market	ditto
	Basu, Pulin Dhan ..	.. Assistant, Accountant-General's Office, Bengal ..	.. Treasury Buildings	ditto
	Basu, Rabindra Lal, BSc	.. Mechanical Assistant, Spl Officer's Deptt, Calcutta Corporation	Municipal Office	ditto
	Basu, Radharaman ..	.. Assistant, Lovelock & Lewes	.. 4, Lyons Range	ditto
	Basu, Radharaman ..	.. Head Clerk, Lardner North & Co	.. 8, Strand Road	ditto
	Basu, Radhika Prasad ..	.. Assistant, Office of the Inspector-General of Prisons, Bengal	.. Writers' Buildings	ditto
	Basu, Rajani Kanta, BSc	.. Assistant, Accountant-General's Office, Bengal ..	.. Treasury Buildings	ditto
	Basu, Rajendra Nath ..	.. Accounts Clerk, E W S, Calcutta Corporation ..	.. Municipal Office	ditto

Basu, Raj Krishna	Stenographer, Traffic Department, E B R ..	.. 3, Kaylaghat Street	ditto
Basu, Rakhal Das	Inspector, Collection Department, Calcutta Corporation ..	Municipal Office	ditto
Basu, Rakhal Das, BSC	Assistant, Accountant-General's Office, Bengal ..	.. Treasury Buildings	ditto
Basu, Ramabhusan, BE	Engineer, Holmes, Wilson & Co, Ld	.. Norton Buildings	ditto
Basu, Ramani Kanta	Assistant, Accountant-General's Office, Bengal ..	.. Treasury Buildings	ditto
Basu, Ramani Mohan	Accountant, Factory Inspection Department, Bengal	.. 40-1A, Free School Street ..	ditto
Basu, Ramendra Kumar, BA, BL ..	Clerk, C A's Office, E I R	.. E I R House	ditto
Basu, Ramesh Ch	Assistant, Grahams Trading Co (India), Ld ..	.. 6, Lyons Range	ditto
Basu, Ranajit Kumar	Assistant, Standard Engineering Co, Ld	.. 103, Bowbazar Street	ditto
Basu, Rangalal	Clerk, Norwich Union Fire Insurance Society, Ld ..	.. 8, Old Court House Street ..	ditto
Basu, Rash Bihari	Assistant, Ewing & Co, Ld	.. 4, Clive Row	ditto
Basu, Relati Raman	Head Clerk, Lighting Department, Calcutta Corporation ..	Municipal Office	ditto
Basu, Sahayaram	Professor, Bangabasi College	.. 25-1, Scott Lane	ditto
Basu, Santos Krishna	Assistant, Accounts Department, Calcutta Corporation	.. Municipal Office	ditto
Basu, Santos Kumar	Asstt Cashier, P & O Banking Corporation, Ld ..	.. 1, Fairlie Place	ditto
Basu, Sarada Prasanna	Assistant Cashier, Lloyds Bank, Ld	.. 101-1, Clive Street	ditto
Basu, Satish Chandra	Assistant, Accountant-General's Office, Bengal ..	.. Treasury Buildings	ditto

No.	Names.	Style or calling	Residence or place of business.	Religion.
	Basu, Satish Chandra ..	.. Land Acquisition Clerk, Presidency Commissioner's Office	.. 3, Charnock Place ..	.. Hindu
	Basu, Satish Chandra, MA	.. Teacher, Bangabasi College School	.. 25-1, Scott Lane ..	.. ditto
	Basu, Satish Chandra ..	.. Assistant, Royal Insurance Co, Ld	.. 26 & 27, Dalhousie Square ..	.. ditto
	Basu, Satish Chandra ..	.. Clerk, Gillanders, Arbuthnot & Co	.. 8, Clive Street ..	.. ditto
	Basu, Satish Kumar] ..	.. Assistant, Mackinnon, Mackenzie & Co	.. 16, Strand Road ..	.. ditto
	Basu, Satya Bhusan ..	.. Clerk, Alliance Assurance Co, Ld	.. 2, Hare Street ..	.. ditto
	Basu, Satya Gopal ..	.. Clerk, P D O, Imperial Bank of India	.. 8, Council House Street ..	.. ditto
	Basu, Satyendra Krishna	.. Assistant, Office of the Director of Industries, Bengal	.. 40-1A, Free School Street	.. ditto
	Basu, Shachindra Nath ..	.. Assistant, Accountant-General's Office, Bengal ..	.. Treasury Buildings ..	.. ditto
	Basu, Shachindra Nath ..	.. Peshkar, Presidency Commissioner's Office ..	.. 3, Charnock Place ..	.. ditto
	Basu, Shachipati ..	.. Assistant, Accountant-General's Office, Bengal ..	.. Treasury Buildings ..	.. ditto
	Basu, Shailendra Lal, BA	.. Clerk, Office of the Controller of Army Factory Accounts	.. 6, Esplanade, East ..	.. ditto
	Basu, Shailendra Nath, BSC	.. Demonstrator, Ripon College	.. 24, Harrison Road ..	.. ditto
	Basu, Shailendra Nath ..	.. Assistant, Bird & Co	.. 1-1, Clive Street ..	.. ditto
	Basu, Shailendra Nath ..	.. Manager to S C Ghose	.. 5, Ezra Street ..	.. ditto
	Basu, Shakti Kshetra ..	.. Clerk, Agent's Office, E B R	.. 3, Kaylaghat Street ..	.. ditto

Basu, Shambhu Gopal, BA	.. Assistant, Accountant-General's Office, Bengal	.. ..	Treasury Buildings	.. .. ditto
Basu, Sham Kishore, BA ..	.. Head Clerk, Office of the Controller of Purchase, Indian Stores Department.		6, Esplanade, East	.. .. ditto
Basu, Shanti Kumar, BA	.. Assistant, Bengal Secretariat, Judicial Department	..	Writers' Buildings	.. .. ditto
Basu, Shibanikinkar ..	.. Assistant, Accountant-General's Office, Bengal	.. ..	Treasury Buildings	.. .. ditto
Basu, Shrish Chandra ..	.. Clerk, Fire Department, South British Insurance Co, Ld	..	5, Clive Street	.. .. ditto
Basu, Sitanath ..	.. Assistant, Macneill & Co	..	2, Fairlie Place	.. .. ditto
Basu, S K ..	.. Inspector, Standard Life Assurance Co	..	32, Dalhousie Square	.. .. ditto
Basu, S K ..	.. Lighting Inspector, Calcutta Improvement Trust	.. ..	5, Clive Street	.. .. ditto
Basu, S N ..	.. Clerk, Office of the Chief Mining Engineer, Railway Board	..	1, Council House Street..	.. ditto
Basu, S N ..	.. Clerk, C E S C, Ld	..	Victoria House	.. .. ditto
Basu, Sourindra Mohan	.. Assistant, Accountant-General's Office, Bengal	.. ..	Treasury Buildings	.. .. ditto
Basu, Subodh Kumar, BSc, No. I	.. Assistant, Accountant-General's Office, Bengal	.. ..	Treasury Buildings	.. .. ditto
Basu, Subodh Kumar, MSc, No. II	.. Assistant, Accountant-General's Office, Bengal	.. ..	Treasury Buildings	.. .. ditto
Basu, Sudhir Chandra ..	.. Reader, P S's Office, E I R	..	E I R House	.. .. ditto
Basu, Sudhir Chandra, BA	.. Assistant, Accountant-General's Office, Bengal	..	Treasury Buildings	.. .. ditto
Basu, Sudhir Kumar, MA	.. Laboratory Assistant, University Colle ..	..	92, Upper Circular Road ..	.. ditto
Basu, Sudhir Kumar ..	.. Inspector, Collection Department, Calcutta Corporation	..	Municipal Office	.. ditto

No.	Names.	Style or calling.	Residence or place of business.	Religion.
	Basu, Surendra Nath ..	.. Assistant, Martin & Co	.. 12, Mission Row ..	Hindu
	Basu, Surendra Nath ..	.. Clerk, Dalhousie Institute	.. Dalhousie Square ..	ditto
	Basu, Surendra Nath (No I)	.. Clerk, C A O's Office, E I R ..	.. E I R House ..	ditto
	Basu, Suresh Chandra ..	.. Assistant, Accountant-General's Office, Bengal ..	.. Treasury Buildings ..	ditto
	Basu, Sushil Chandra, BSC	.. Assistant Foreman, Printing Office, Calcutta Corporation	.. Municipal Office ..	ditto
	Basu, Taracharan, BSC ..	.. Audit Clerk, E B R	.. 3, Kaylaghat Street	ditto
	Basu, Tinkari, BSC ..	.. Assistant Chemist, Office of the Director of Industries, Bengal	.. 40-1A, Free School Street ..	ditto
	Basu, Umapada ..	.. Book-keeper, Balmer, Lawrie & Co, Ld ..	.. 103, Clive Street ..	ditto
	Basu Mullick, Nirmal Chandra	.. Assistant, Macneill & Co	.. 2, Fairlie Place	ditto
	Basu Ray, Bijaya Bhusan	.. Assistant Cashier, Sun Life of Canada	.. 12, Dalhousie Square, East ..	ditto
	Batabyal, Bimalananda ..	.. Assistant, Bengal Secretariat, Irrigation Department	.. Writers' Buildings	ditto
	Batabyal, Binode Bihari ..	.. Assistant, Mackinnon, Mackenzie & Co	.. 16, Strand Road	ditto
	Batabyal, Narendra Nath	.. Audit Inspector, Port Commissioners' Office ..	.. Strand Road ..	ditto
	Behura, N N ..	.. Inspector, C E S C, Ld	.. Victoria House	Christian
	Bera, Janaki Nath ..	.. Cashier, Calcutta University	.. Senate House ..	Hindu
	Bhadra, Shachindra Kumar	.. Assistant, Nestles and Anglo-Swiss Condensed Milk(Export) Co, Ld	9A, Clive Street	ditto
	Bhaduri, Ashutos ..	.. Assistant, Martin & Co	.. 12, Mission Row	ditto

Bhaduri, Banbihari, BSc, BE	..	Assistant, Holmes Wilson & Co, Ld	..	Norton Buildings ..	.. ditto.
Bhaduri, Jnanendra Lal, MSc	..	Assistant, Zoological Survey of India	..	Indian Museum ..	.. ditto.
Bhaduri, Nilmani, BA ..	..	Examiner of Stores, Indian Stores Department (Inspection)	..	6, Esplanade, East ..	.. ditto.
Bhaduri, Rajani Kanta ..	..	Book-keeper, W Billinton & Co, Ld	..	Mercantile Buildings ..	.. ditto
Bhaduri, Sushilchandra ..	..	Sub-Head, C A O's Office, E I R	.	E I R House ..	.. ditto
Bhaduri, Upendra Nath ..	..	Assistant, Presidency College	..	86-1, College Street ..	.. ditto
Bhagwat, Sakharam Hari, BA	..	Assistant, Tata Iron & Steel Co, Ld	..	100, Clive Street ..	.. ditto
Bhandari, S R ..	..	Clerk, C E S C. Ld	..	Victoria House ..	.. ditto
Bhanja, Haridas, MSc ..	..	Lecturer, City College	..	102-1, Amherst Street ..	.. ditto
Bhar, Akhil Chandra ..	..	Assistant, Macmillan & Co, Ld	..	294, Bowbazar Street ..	.. ditto
Bhar, Amulya Krishna ..	..	Clerk, Collection Department, Calcutta Corporation	..	Municipal Office ..	.. ditto
Bhar, Bhavataran ..	..	Assistant, Bengal Secretariat, Appointment Department	..	Writers' Buildings ..	.. Brahmo
Bhar, Bijaya Krishna ..	..	Assistant, Surgeon-General's Office, Bengal ..	..	Writers' Buildings ..	.. Hindu
Bhar, Chandra Bhusan ..	..	Assistant, Income-tax Office	..	3, Government Place, West	.. ditto
Bhar, Debendra Nath ..	..	Salesman, English Electric Co, Ld	..	D-4, Clive Buildings ..	.. ditto
Bhar, Hari Gopal, MSc ..	..	Salesman, Adair Dutt & Co, Ld	..	5, Dalhousie Square ..	.. ditto
Bhar, Jitendra Mohan ..	..	Book-keeper, Balmer, Lawrie & Co, Ld ..	..	103, Clive Street ..	.. ditto
Bhar, Kiran Chandra ..	..	Clerk, Union Insurance Society of Canton, Ld ..	..	8, Clive Street ..	.. ditto.

No.	Names.	Style or calling	Residence or place of business.	Religion.
	Bhar, Manmatha Nath ..	.. Clerk, Shaw Wallace & Co	.. 4, Bankshall Street	Hindu
	Bhar, Purna Chandra ..	.. Assistant, Balmer, Lawrie & Co, Ld	.. 103, Clive Street	ditto
	Bhar, Rash Bihari ..	.. Assistant, Andrew Yule & Co, Ld	.. 8, Clive Row	ditto
	Bhar, Surendra Nath ..	.. Salesman, English Electric Co, Ld	.. D-4, Clive Buildings	ditto
	Bhar, Tarapada ..	.. Assistant, Office of the Controller of Currency ..	.. Treasury Buildings	ditto
	Bhar, Upendra Nath ..	.. Clerk, Birkmyre Bros	.. 6 Clive Row	ditto
	Bhat, Yeshwant Abaji, BA	.. Assistant, Tata Iron & Steel Co, Ld	.. 100, Clive Street	ditto
	Bhatia, D D ..	.. Reporter, P & O Banking Corporation, Ld ..	.. 1, Fairlie Place	ditto
	Bhatia, Gobardhandas	.. Clerk, P & O Banking Corporation, Ld ..	.. 1, Fairlie Place	ditto
	Bhattacharji, Amar Nath	.. Assistant, Imperial Chemical Industries (India), Ld	.. 18, Strand Road	ditto
	Bhattacharji, Amulya Ch	.. Eng Overseer, Calcutta Corporation, District I	.. 79, Cornwallis Street	ditto
	Bhattacharji, Amulya Kumar	.. Surveyor and Valuer, Land Acquisition Office ..	.. 5, Bankshall Street	ditto
	Bhattacharji, Anil Kumar	.. Assistant, Bengal Secretariat, Finance Department ..	.. Writers' Buildings	ditto
	Bhattacharji, Annada Charan	.. Head Clerk, Health Office, Calcutta Corporation ..	.. Municipal Office	ditto
	Bhattacharji, Anurup Chandra	.. Assistant, Accountant-General's Office, Bengal ..	.. Treasury Buildings	ditto
	Bhattacharji, Ashutos	.. Clerk, Shaw Wallace & Co	.. 4, Bankshall Street	ditto
	Bhattacharji, Ashutos, BA	.. Assistant, Calcutta University	.. Senate House	ditto
	Bhattacharji, Barada Kanta	.. Assistant, Andrew Yule & Co, Ld	.. 8, Clive Row	ditto

Bhattacharji, B B	..	Assistant, Heatly & Gresham, Ld	..	6, Waterloo Street	ditto
Bhattacharji, Bhabadeb, BSC	..	Assistant, Accountant-General's Office, Bengal	..	Treasury Buildings	ditto
Bhattacharji, Bhabataran	..	Clerk, Gillanders, Arbuthnot & Co	..	8, Clive Street	ditto
Bhattacharji, Bhudhar Ch., MA	..	Lecturer, Ripon College	..	24, Harrison Road	ditto
Bhattacharji, Bhupendra Nath	..	Clerk, I G N & Ry Co, Ld	..	4, Fairlie Place	ditto
Bhattacharji, Bhupendra Nath	..	Head Clerk, (Marine) Commercial Union Assurance Co, Ld	..	32, Dalhousie Square	ditto
Bhattacharji, Bhupendra Nath, MA, BT		Assistant Master, Bethune Collegiate School	..	181, Cornwallis Street	ditto
Bhattacharji, Bibhutibhusan	..	Clerk, C O P S Office, E I R	..	E I R House	ditto
Bhattacharji, Bibhutibhusan	..	Assistant, Bird & Co	..	1-1, Clive Street	ditto
Bhattacharji, Bijaya K.	..	Store-keeper, Calcutta Improvement Trust	..	5, Clive Street	ditto
Bhattacharji, Bijaya Kumar	..	Clerk, C A O's Office, E I R	..	E I R House	ditto
Bhattacharji, Birendra Nath	..	Assistant, Balmer, Lawrie & Co, Ld	..	103, Clive Street	ditto
Bhattacharji, Brahmeshwar, MA, BL	..	Assistant, Calcutta University	..	Senate House	ditto
Bhattacharji, Chaitanya	..	Sub-Head, Accounts Office, E B R	..	3, Kaylaghat Street	ditto
Bhattacharji, Charu Chandra	..	Clerk, C O P S Office, E I R	..	E I R House	ditto
Bhattacharji, Charu Chandra, MA	..	Assistant, Commercial Intelligence Department, India	..	1, Council House Street	ditto
Bhattacharji, Debendra Nath	..	Clerk, C C M's Office, E I R	..	E I R House	ditto
Bhattacharji, Debendra Nath	..	Head Assistant (Stationery), Macneill & Co	..	2, Fairlie Place	ditto

No.	Names.	Style or calling.	Residence or place of business.	Religion.
	Bhattacharji, Dhirendra Nath ..	Assistant, Accountant-General's Office, Bengal	Treasury Buildings	Hindu.
	Bhattacharji, Dhirendra Nath, MA ..	Clerk, Chief Auditor's Office, E I R	E I R House	ditto.
	Bhattacharji, Dibakar ..	Asstt Accountant, Executive Engineer's Office, Workshops Electrical Divn, P W D	Writers' Buildings	ditto.
	Bhattacharji, Dinesh Chandra, MA ..	Lecturer, Sanskrit College	College Square	ditto.
	Bhattacharji, Durgadas ..	Clerk, Agency Deptt, E B R	3, Kaylaghat Street	ditto.
	Bhattacharji, Durgapada ..	Assistant, Accountant-General's Office, Bengal	Treasury Buildings	ditto
	Bhattacharji, Dwijendra Nath ..	Clerk, C C M's Office, E I R	E I R House	ditto
	Bhattacharji, Fakir Chandra ..	Reader, Government of India Press	8, Hastings Street	ditto
	Bhattacharji, G N	Accountant, Standard Life Assurance Co	32, Dalhousie Square	ditto
	Bhattacharji, Hara Kamal ..	Assistant Estimator, Office of the Superintending Engineer, Presidency Circle, P W D	Writers' Buildings	ditto
	Bhattacharji, Hari Charan, BA (No. II) ..	Assistant, Accountant-General's Office, Bengal	Treasury Buildings	ditto
	Bhattacharji, Hari Charan ..	Supervisor, P H D, Bengal	3, Charnock Place	ditto
	Bhattacharji, Haridas, MA ..	Assistant, Accountant-General's Office, Bengal	Treasury Buildings	ditto
	Bhattacharji, Harideb	Code Clerk, Geo Henderson & Co, Ld	101-1, Clive Street	ditto
	Bhattacharji, Haripada, MA, BT ..	Assistant Master, Hindu School	College Square	ditto
	Bhattacharji, Hemanta Kumar ..	Assistant, Bird & Co	1-1, Clive Street	ditto
	Bhattacharji, Hemanta Kumar, BA ..	2nd Head Assistant, Bengal Secretariat, Budget Branch ..	Writers' Buildings	ditto.

Bhattacharji, Hem Chandra	..	Clerk, Book-Section, Port Commissioners' Office	Strand Road	ditto
Bhattacharji, H G		Assistant, Imperial Record Department	3, Government Place, West ..	ditto
Bhattacharji, Jamini Kumar	..	Assistant, Superintending Engineer's Office, S W Circle, P W D	Treasury Buildings	ditto
Bhattacharji, Janakiballav, MA	..	Lecturer, Ripon College	24, Harrison Road	ditto
Bhattacharji, Jibesh Chandra	..	Correspondence Clerk, P H D, Bengal	3, Charnock Place	ditto
Bhattacharji, Jitendra Nath	..	Assistant, Central Stationery Office	3, Church Lane	ditto
Bhattacharji, Jitendra Nath, BA	..	Assistant, University College	Senate House	ditto
Bhattacharji, J N		Assistant, Mackinnon, Mackenzie & Co	8, Strand Road	ditto
Bhattacharji, J N		Clerk, Calcutta Mint	47, Strand Road	ditto
Bhattacharji, Kalidas ..	..	Shipping Clerk, Stewarts and Lloyds, Ld	6, Royal Exchange Place ..	ditto
Bhattacharji, Kali Kumar	..	Book-Keeper, Harrisons and Crosfield, Ld	6, Church Lane	ditto
Bhattacharji, Kartik Chandra	..	Estimator, Office of the Executive Engineer, City Division, P W D	Writers' Buildings	ditto
Bhattacharji, K D		Assistant, Barry & Co	2, Fairlie Place	ditto
Bhattacharji, Keshab Chandra	..	Assistant, Accountant-General's Office, Bengal	Treasury Buildings	ditto
Bhattacharji, Kirti Mohan	..	Clerk, C C M's Office, E I R	E I R House	ditto
Bhattacharji, Krishna Chandra	..	Assistant, Bengal Secretariat, Political Department	Writers' Buildings	ditto

Names.	Style or calling.	Residence or place of business.	Religion.
Bhattacharji, Krishnadhone ..	Assistant, Accountant-General's Office, Bengal ..	.. Treasury Buildings ..	.. Hindu
Bhattacharji, Krishna Hari ..	Assistant, Indian Stores Department (Inspection) ..	.. 6, Esplanade, East ..	. ditto
Bhattacharji, Krishna Nath ..	Assistant, Excise Commissioners' Office, Bengal ..	.. Writers' Buildings ..	.. ditto
Bhattacharji, Kshetra Mohan ..	Assistant, Office of the Director of Public Health, Bengal ..	Writers' Buildings ..	.. ditto
Bhattacharji, Kshirode Kumar ..	Accountant, Ex Engineer's Office, Canals Division ...	Treasury Buildings ..	.. ditto
Bhattacharji, Kumudini Kanta, BA	Assistant, Accountant-General's Office, Bengal ..	.. Treasury Buildings ..	.. ditto
Bhattacharji, Kumud Kanta, BA ..	Assistant, University College	.. Senate House ..	.. ditto
Bhattacharji, Lalit Mohan ..	Sub-Head Draftsman, E I R	.. E I R House ..	.. ditto
Bhattacharji, Mahadev, BA ..	Assistant, Accountant-General's Office, Bengal ..	.. Treasury Buildings ..	.. ditto
Bhattacharji, Mahesh Chandra, M SC	Joint Accountant, Unique Assurance Co, Ld ..	.. 10, Canning Street ..	.. ditto
Bhattacharji, Manaranjan ..	Clerk, C A O's Office, E I R ..	.. E I R House ..	.. ditto
Bhattacharji, Manaranjan, MA ..	Lecturer, Ripon College	.. 24, Harrison Road ..	.. ditto
Bhattacharji, Manilal ..	Reader, Government of India Press ..	.. 8, Hastings Street ..	.. ditto
Bhattacharji, Nagendra Mohan, BA ..	Stenographer, Adair Dutt & Co, Ld ..	.. 5, Dalhousie Square ..	.. ditto
Bhattacharji, Nalendra Nath, BA ..	Assistant, Accountant-General's Office, Bengal ..	.. Treasury Buildings ..	.. ditto
Bhattacharji, Nanda Lal, BE ..	Engineeering Supervisor, Calcutta Corporation, District I ..	79, Cornwallis Street ..	.. ditto
Bhattacharji, Nani Bhusan ..	Assistant, Government of India Press ..	.. 8, Hastings Street ..	.. ditto
Bhattacharji, Narendra Kishore ..	Agency Superintendent, Great India (Insurance) Ld ..	14, Clive Street ..	.. ditto
Bhattacharji, Nitya Hari ..	Head Assistant, Provident Fund Department, Birla Brothers, Ld	8, Royal Exchange Place ..	.. ditto
Bhattacharji, Panchanan ..	Clerk, Accounts Department, E B R	.. 3, Kaylaghat Street ..	.. ditto

Bhattacharji. Panchugopal, BSC, BL	Demonstrator, Scottish Church College	4, Cornwallis Square	ditto
Bhattacharji, Paresh Nath ..	Assistant, Accountant-General's Office, Bengal	Treasury Buildings	ditto
Bhattacharji, Pashupati, BA ..	Assistant, Map Publication Department, Surveyor-General's Office	13, Wood Street	ditto
Bhattacharji, Patanjali, MA ..	Assistant, Bengali Translator's Office	Writers' Buildings	ditto
Bhattacharji, Phani Bhushan ..	Clerk, Royal Insurance Co, Ld	26 & 27, Dalhousie Square ..	ditto
Bhattacharji, Prabodh Chandra, MA, BT	Assistant Master, Sanskrit Collegiate School	College Square	ditto
Bhattacharji, Prabodh Chandra ..	Stenographer, Office of the Controller of Army Factory Accounts	6, Esplanade, East	ditto
Bhattacharji, Prakash Chandra ..	Assistant, Brooke Bond (India), Ld	2, Metcalfe Street	ditto
Bhattacharji, Pramatha Nath, MA, BT	Assistant Master, Hare School	87, College Street	ditto
Bhattacharji, Pramatha Nath ..	Reader, Government of India Press	8, Hastings Street	ditto
Bhattacharji, Pravas Chandra ..	Assistant, Barry & Co	2, Fairlie Place	ditto
Bhattacharji, Priyanath ..	Accountant, Lal Chand & Sons	76, Lower Circular Road	ditto
Bhattacharji, Pulin Bihari ..	Assistant, Accountant-General's Office, Bengal	Treasury Buildings	ditto
Bhattacharji, Purna Chandra ..	Clerk, Agent's Office, E I R	E I R House	ditto
Bhattacharji, Rajani Kanta ..	Book-Keeper, Anderson Wright & Co	22, Strand Road	ditto
Bhattacharji, Ram Chandra ..	Surveyor, Calcutta Improvement Trust	5, Clive Street	ditto
Bhattacharji, Ramesh Chandra, MSC	Lecturer, Ripon College	24, Harrison Road	ditto
Bhattacharji, Ramhari ..	Assistant, Office of the Controller of Currency	Treasury Buildings	ditto

No.	Names.	Style or calling.	Residence or place of business.	Religion.
	Bhattacharji, Ram Sadaya ..	Crew Inspector, E B R	3, Kaylaghat Street, ...	Hindu
	Bhattacharji, Ranendra Nath ..	Cashier, Northern Assurance Co, Ld	7, Hare Street	ditto
	Bhattacharji, Rukmini Kanta, BA	Head Clerk, Indian Stores Department (Inspection) ..	6, Esplanade, East	ditto
	Bhattacharji, Sahayram, MA, BT ..	Asstt Master, Hindu School	1-B, College Square	ditto
	Bhattacharji, Satya Ranjan, MSc	Assistant, A-G's Office, Bengal	Treasury Buildings	ditto
	Bhattacharji, Satya Sankar, BA ..	Assistant, Surveyor-General's Office	13, Wood Street	ditto
	Bhattacharji, Satyendra Krishna ..	Chief Clerk, Mackintosh Burn, Ld	8, Clive Street	ditto
	Bhattacharji, Shailendra ..	Assistant, Accountant-General's Office, Bengal	Treasury Buildings	ditto
	Bhattacharji, Shaktikanta ..	Accountant & Cashier, Patent Office	1, Council House Street	ditto
	Bhattacharji, Shaktikanta ..	Clerk, Traffic Department, E B R	3, Kaylaghat Street	ditto
	Bhattacharji, Sharat Chandra ..	Assistant Printer, *Statesman*, Ld	*Statesman* House	ditto
	Bhattacharji, Sharat Kumar ..	Assistant, Bengal Chemical & Pharmaceutical Works, Ld ..	31, Chittaranjan Avenue, South ..	ditto
	Bhattacharji, Shashi Bhusan ..	Clerk, Cash and Pay Section, Port Commissioners' Office ..	Strand Road	ditto

Bhattacharji, Shyamapada, BA	Assistant, Accountant-General's Office, Bengal	Treasury Buildings		ditto
Bhattacharji, Shyamapada, BA	Assistant, Accounts Department, Calcutta Corporation	Municipal Office		ditto
Bhattacharji, Sitesh Chandra, BA	Offg Accountant, Accountant-General's Office, Bengal	Treasury Buildings		ditto
Bhattacharji, S N	Assistant Bullion Keeper, Calcutta Mint	47, Strand Road		ditto
Bhattacharji, Subodh Chandra	Clerk, Royal Insurance Co, Ld	26 & 27, Dalhousie Square		ditto
Bhattacharji, Sudhir Kumar	Assistant, Mackinnon, Mackenzie & Co	16, Strand Road		ditto
Bhattacharji, Surendra Nath	Invoice Clerk, Geo Henderson & Co, Ld	101-1, Clive Street		ditto
Bhattacharji, Surendra Nath	Assistant, Commercial Intelligence Department	1, Council House Street		ditto
Bhattacharji, Surendra Nath	Assistant, Bengal Secretariat, Political Department	Writers' Buildings		ditto
Bhattacharji, Taraknath, BA	Assistant, Bengal Secretariat, Finance Department	Writers' Buildings		ditto
Bhattacharji, Tinkari	Clerk, Traffic Department, E B R	3, Kaylaghat Street		ditto
Bhattacharji, Tulsi Charan	Assistant, Accountant-General's Office, Bengal	Treasury Buildings		ditto
Bhose, Dwarkanath	Cashier, Kettlewell Bullen & Co, Ld	21, Strand Road		ditto
Bhose, Shambhu Nath	Clerk, Kettlewell Bullen & Co, Ld	21, Strand Road		ditto
Bhowmic, Birendra Kumar	Salesman, H L Rochat & Co (Calcutta), Ld	54, Ezra Street		ditto
Bhowmic, Girindra Chandra	Surveyor and Valuer, Land Acquisition Office	5, Bankshall Street		ditto
Bhowmic, Surendra Nath	Head Clerk and Accountant, Keymer Bagshawe & Co, Ld	4, Lyons Range		ditto
Bhawalka, Ram Kumar	Assistant, Andrew Yule & Co, Ld	8, Clive Row		ditto
Bhuiyan, Upendra Nath	Assistant, Calcutta University	Senate House		ditto
Bijapurkar, Govindrao	Assistant, Eastern Bank, Ld	9, Clive Street		ditto

No.	Names.	Style or calling.	Residence or place of business.	Religion.
	Billimoria, D N ..	.. Assistant, Imperial Chemical Industries (India), Ld ..	.. 18, Strand Road	.. Zoroastrian
	Bilimoria, Khurshed R	.. Cashier, Central Bank of India, Ld	.. 100, Clive Street	ditto
	Billimoria, Roosie Navroji	.. Assistant Sales Manager, Walford Transport, Ld ..	.. 71-73, Park Street	ditto
	Biswas, Abhaya Kumar	.. Assistant Salesman, Greaves Cotton & Co, Ld ..	.. 60, Dharamtola Street ..	Christian
	Biswas, Ashutos	.. Clerk, Collection Department, Calcutta Corporation ..	.. Municipal Office	Hindu
	Biswas, Basudev	.. Clerk, Calcutta Improvement Trust	.. 5, Clive Street	ditto
	Biswas, Bhupendra Kumar	.. Clerk, Agent's Office, E B R	.. 3, Kaylaghat Street	ditto
	Biswas, Bijaya Gopal ..	.. Assistant, Calcutta University	.. Senate House	ditto
	Biswas, B N	.. Assistant, Moran & Co, Ld	.. 4, Lyons Range	ditto
	Biswas, Dhirendra Nath, BSc	.. Assistant, Commercial Intelligence Department, India	.. 1, Council House Street	ditto
	Biswas, Hari Bhusan ..	.. Assistant, Office of the Inspector-General of Prisons, Bengal	.. Writers' Buildings	ditto
	Biswas, Hazari Lall	.. Assistant, J & R Hutchison, Ld	.. 29, Watterloo Street	ditto
	Biswas, Hem Chandra	.. Accountant, Reed Ward & Co	.. 6, Lyons Range	ditto
	Biswas, Jamini Kanta	.. Assistant, Accountant-General's Office, Bengal ..	.. Treasury Buildings	ditto
	Biswas, Jatindra Nath	.. Clerk, Marine Department, South British Insurance Co, Ld	.. 5, Clive Street	ditto
	Biswas, J D ..	.. Clerk, Jardine, Skinner & Co	.. 4, Clive Row	Christian
	Biswas, Jogendra Nath	.. Clerk, C A O's Office, E I R	.. E I R House ..	Hindu
	Biswas, Jogesh Chandra	.. Cashier, Sinclair, Murray & Co, Ld	.. 6, Royal Exchange Place	ditto

Biswas, Kalipada, MA	Assistant, Office of the Controller of Currency	Treasury Buildings		ditto
Biswas, Kartic Chandra	Assistant, Accountant-General's Office, Bengal	Treasury Buildings		ditto
Biswas, Kiran Chandra	Clerk, Cash Department, Imperial Bank of India	Strand Road		ditto
Biswas, Manindra Lal	Chief Store-Keeper (Photo-Litho), Survey of India	14, Wood Street		Christian
Biswas, M L	Assistant, Mackinnon, Mackenzie & Co	8, Strand Road		ditto
Biswas, Mohini Mohan	Clerk, American Express Co, Inc	14, Government Place, East		Hindu
Biswas, M R	Secretary, Boys' Branch, Y M C A	86, College Street		Christian
Biswas, Nritya Gopal	Assistant Engineer, Martin & Co	12, Mission Row		Hindu
Biswas, Prabodh Chandra	Assistant, Kettlewell, Bullen & Co, Ld	21, Strand Road		ditto
Biswas, Prafulla Kumar	Clerk, Jardine Skinner & Co	4, Clive Row		ditto
Biswas, Pulin Bihari	Clerk, C A's Office, E I R	E I R House		ditto
Biswas, Ramesh Chandra	Assistant, Octavius Steel & Co, Ld	14, Old Court House Street		ditto
Biswas, Saroj Nath, BA	Assistant, Accounts Department, Calcutta Corporation	Municipal Office		ditto
Biswas, Satish Chandra	Assistant, Macneill & Co	2, Fairlie Place		ditto
Biswas, Satya Ranjan	Assistant, Accountant-General's Office, Bengal	Treasury Buildings		ditto

No.	Names.	Style or calling.	Residence or place of business.	Religion.
	Biswas, Shachindra Nath, BA	Assistant, Accountant-General's Office, Bengal	Treasury Buildings	Hindu
	Biswas, Shachindra Nath	Assistant, Moran & Co, Ld	4, Lyons Range	ditto
	Biswas, Shailendra Nath, BA	Assistant, Calcutta University	Senate House	ditto
	Biswas, Shashi Bhusan	Examiner of Stores, Indian Stores Department (Inspection)	6, Esplanade, East	ditto
	Biswas, Shashi Bhusan	Assistant, Brooke Bond (India), Ld	2, Metcalfe Street	ditto
	Biswas, S N	Stenographer, Reed Ward & Co	6, Lyons Range	ditto
	Biswas, S N	Assistant, Guest, Keen, Williams, Ld	7, Council House Street	ditto
	Biswas, Subodh Chandra, BA	Assistant Accountant, Lighting, Calcutta Corporation	Municipal Office	ditto
	Biswas, T	Assistant, Mackinnon, Mackenzie & Co	16, Strand Road	Christian
	Biswas, T C	Assistant, Mackinnon, Mackenzie & Co	16, Strand Road	ditto
	Bose, Albert	Assistant, Mackinnon, Mackenzie & Co	16, Strand Road	ditto
	Brahma, Bhupendra Nath	Sub-Head, C A O's Office, E I R	E I R House	Hindu
	Brahma, Nalini Kanta	Professor, Presidency College	86-1, College Street	ditto
	C			
	Chakravarti, Akshaya K	Clerk, Sun Life of Canada	12, Dalhousie Square, East	Hindu
	Chakravarti, Akshaya Kumar	Assistant, Agri and Ind Department, Bengal	Writers' Buildings	ditto
	Chakravarti, Amrita Lal	Clerk, Turner, Morrison & Co, Ld	6, Lyons Range	ditto

Chakravarti, Ananta Kumar	..	Overseer, City Division, P W D	..	Writers' Buildings .. .. ditto
Chakravarti, Anath Bandhu	..	Clerk, Depositor's Department, Imperial Bank of India	..	Strand Road .. .. ditto
Chakravarti, Anil Kumar, MA	..	Assistant, Commercial Intelligence Department, India	..	1, Council House Street .. .. ditto
Chakravarti, Anukul Chandra	..	Assistant, Macneill & Co	..	2, Fairlie Place .. .. ditto
Chakravarti, Ashutos	..	Assistant, Senda & Co (India), Ld	..	135, Canning Street .. .. ditto
Chakravarti, Ashutos, BA	..	Accounts Clerk, Town Hall, Calcutta Corporation ..	..	4, Esplanade Row .. .. ditto
Chakravarti, Atul Krishna	..	Clerk, Office of the Controller of Army Factory Accounts	..	6, Esplanade, East .. .. ditto
Chakravarti, Basanta Kumar	..	Clerk, National Bank of India, Ld	..	104, Clive Street .. .. ditto
Chakravarti, Bhuban Mohan	..	Assistant, Office of the Director of Public Health, Bengal	..	Writers' Buildings .. .. ditto
Chakravarti, Bhupati Charan	..	Assistant, Balmer, Lawrie & Co, Ld	..	103, Clive Street .. .. ditto
Chakravarti, Bhupati Nath	..	Assistant, Office of the Director of Public Instruction, Bengal	..	Writers' Buildings .. .. ditto
Chakravarti, Bhupendra Narain	..	Assistant, Accounts Department, Calcutta Corporation	..	Municipal Office .. .. ditto
Chakravarti, Bibhuti Bhusan, BE, CE	..	Assistant, Holmes Wilson & Co, Ld	..	Norton Buildings .. .. ditto
Chakravarti, Bijaya Krishna	..	Assistant, Price, Waterhouse, Peat & Co ..	..	B-4, Clive Buildings .. .. ditto
Chakravarti, Binode Bihari, BL	..	Assistant, Bengal Secretariat Record Room —		Writers' Buildings .. .. ditto
Chakravarti, Charu Chandra, BA	..	Assistant, Accountant-General's Office, Bengal ..	..	Treasury Buildings .. .. ditto
Chakravarti, Charu Chandra	..	Assistant, Ludlow Jute Co, Ld	..	7, Royal Exchange Place .. ditto
Chakravarti, Charu Chandra, BA	..	Assistant, Commercial Intelligence Department, India	..	1, Council House Street .. .. ditto

Names.	Style or calling.	Residence or place of business.	Religion.
Chakravarti, Chintaharan, MA	Lecturer, Bethune College	181, Cornwallis Street	Hindu
Chakravarti, Dharma Das	Head Clerk, Office of the Deputy Director of Agriculture, Western Circle, Bengal	Writers' Buildings	ditto
Chakravarti, D K	Cashier, Standard Life Assurance Co	32, Dalhousie Square	ditto
Chakravarti, Dukhiram	Sub-head, Audit Office, E B R	3, Kaylaghat Street	ditto
Chakravarti, Dukkhaharan, MSC	Assistant Lecturer, Calcutta University	92, Upper Circular Road	ditto
Chakravarti, Girindra Kumar, MSC	Assistant Lecturer, Calcutta University	92, Upper Circular Road	ditto
Chakravarti, Gostha Bihari	Export Clerk, Lipton, Ld	9, Weston Street	ditto
Chakravarti, Goswamidas	Assistant, Ludlow Jute Co, Ld	7, Royal Exchange Place	ditto
Chakravarti, Hari Charan	Assistant, Mackinnon, Mackenzie & Co	16, Strand Road	ditto
Chakravarti, Hari Charan	Clerk, I G N & Ry Co, Ld	4, Fairlie Place	ditto
Chakravarti, Hariprasad	Head Clerk, Executive Engineer's Office, City Division, P W D, Bengal	Writers' Buildings	ditto
Chakravarti, Harisadhan	Assistant, Accountant-General's Office, Bengal	Treasury Buildings	ditto
Chakravarti, Hem Chandra	Salesman (Engineer), Volkart Brothers	11, Clive Street	ditto
Chakravarti, Hemendra Nath	Surveyor, Calcutta Improvement Trust	5, Clive Street	ditto
Chakravarti, H N	Clerk, C E S C, Ld	Victoria House	ditto

Chakravarti, Hrishikesh, MSc	..	Assistant, Accountant-General's Office, Bengal	..	Treasury Buildings	ditto
Chakravarti, Indra Mohan, BA	..	Assistant, Accountant-General's Office, Bengal	..	Treasury Buildings	ditto
Chakravarti, Jatindra Chandra	..	Salesman, Hoare, Miller & Co, Ld	..	5, Fairlie Place	ditto
Chakravarti, Jatindra Nath	..	Assistant, Kettlewell Bullen & Co, Ld	..	21, Strand Road	ditto
Chakravarti, Jaya Gopal	..	Assistant, Port Office, Calcutta	..	15-1, Strand Road	ditto
Chakravarti, Jibaneshwar, MA	..	Divisional Accountant, Accountant-General's Office, Bengal	..	Treasury Buildings	ditto
Chakravarti, Jitendra Nath	..	Surveyor and Valuer, Land Acquisition Office	..	5, Bankshall Street	ditto
Chakravarti, Jogendra Nath	..	Assistant, Martin & Co	..	12, Mission Row	ditto
Chakravarti, Jyotish Chandra, BA	..	Assistant, Board of Revenue, Bengal	..	Writers' Buildings	ditto
Chakravarti, Kailas Chandra	..	Demonstrator, Presidency College	..	86-1, College Street	ditto
Chakravarti, Kalachand ..	..	Clerk, Agent's Office, E I R	..	E I R House	ditto
Chakravarti, Kalipada ..	..	Stenographer, Hoare Miller & Co, Ld	..	5, Fairlie Place	ditto
Chakravarti, Kedar Nath	..	Head Assistant, Section IV, Accounts Dept, Calcutta Corporation		Municipal Office	ditto
Chakravarti, Kripasindhu	..	Assistant, Price, Waterhouse, Peat & Co	..	B-4, Clive Buildings	ditto
Chakravarti, Lakshmi Narayan	..	Clerk, Harrisons and Crosfield, Ld	..	6, Church Lane	ditto
Chakravarti, Makhan Lal	..	Head Clerk, Income-tax Office	..	1, Hare Street	ditto
Chakravarti, Makhan Lal	..	Assistant, Accountant-General's Office, Bengal	..	Treasury Buildings	ditto
Chakravarti, Manaranjan	..	Clerk, Longmans Green & Co, Ld	..	6, Old Court House Street	ditto

No.	Names.	Style or calling.	Residence or place of business.	Religion.
	Chakravarti, Manindra Mohan ..	Assistant, Bengal Secretariat, Marine Department ..	.. Writers' Buildings ..	.. Hindu
	Chakravarti, Manindra Nath, BSC ..	Mains Inspector, Special Officers' Department, Calcutta Corporation.	Municipal Office ..	.. ditto
	Chakravarti, Manmatha Nath ..	Accountant, Begg, Dunlop & Co, Ld ..	.. 2, Hare Street ..	.. ditto
	Chakravarti, Matilal, BA ..	Assistant, Office of the I-G of Police ..	.. Writers' Buildings ..	.. ditto
	Chakravarti, M M	Stenographer, Associated Electrical Industries (India), Ld	.. A-3, Clive Buildings ..	.. ditto
	Chakravarti, Mritunjaya	Sub-Head, C A O's Office, E I R	.. E I R House ..	.. ditto
	Chakravarti, Mrityunjaya ..	Assistant, Government of India Press	.. 8, Hastings Street ..	.. ditto
	Chakravarti, Mukunda Lal ..	Professor, Bangabasi College	.. 25-1, Scott Lane ..	.. ditto
	Chakravarti, N	Assistant Inspector of Factories, Bengal ..	.. 40-1A, Free School Street ..	ditto
	Chakravarti, Nagendra Nath ..	Accountant, Norwich Union Fire Insurance Society, Ld	.. 8, Old Court House Street ..	ditto
	Chakravarti, Nagendra Nath ..	Clerk, C. O. S.'s Office, E I R	.. E I R House ..	.. ditto
	Chakravarti, Nani Gopal ..	Demonstrator, Presidency College	.. 86-1, College Street ..	.. ditto
	Chakravarti, Nanilal	Assistant, Accountant-General's Office, Bengal ..	.. Treasury Buildings ..	.. ditto
	Chakravarti, Narendra Nath ..	Outfall Leveller, Calcutta Corporation	.. Municipal Office ..	.. ditto
	Chakravarti, Niramaya, BL ..	Assistant, Accountant-General's Office, Bengal ..	.. Treasury Buildings ..	.. ditto
	Chakravarti, Nirmal Chundra ..	Clerk, National Bank of India, Ld	.. 104, Clive Street ..	.. ditto

Chakravarti, Nishi Bhusan	.. Assistant, Office of the Inspector-General of Prisons, Bengal	..	Writers' Buildings	.. .. ditto
Chakravarti, N N ..	.. Assistant, Barry & Co	..	2, Fairlie Place	.. .. ditto
Chakravarti, Nripendra Kumar	.. Assistant, Accountant-General's Office, Bengal ..	..	Treasury Buildings	.. .. ditto
Chakravarti, Panchanan ..	.. Assistant, Bird & Co	..	1-1, Clive Street	.. .. ditto
Chakravarti, Paresh Chandra	.. Cashier, Thos Cook & Son , Ld	..	4, Dalhousie Square	.. .. ditto
Chakravarti, Pashupati,	.. Clerk, Calcutta Improvement Trust	..	5, Clive Street	.. .. ditto
Chakravarti, Pashupati	.. Assistant, Boiler Office	..	40-1A, Free School Street	.. ditto
Chakravarti, Phani Bhusan	.. Assistant, Brooke Bond (India), Ld	..	2, Metcalfe Street	.. .. ditto
Chakravarti, Prafulla Chandra	.. Clerk, Agent's Office, E I R	..	E I R House	.. .. ditto
Chakravarti, Prafulla Kumar	.. Head Clerk, Traffic Department, E B R	..	3, Kaylaghat Street	.. .. ditto
Chakravarti, Pramatha Mohan	.. Assistant, Office of the Director of Public Health, Bengal	..	Writers' Buildings	.. .. ditto
Chakravarti, Pravat Chandra	.. Assistant, Office of the Director of Industries, Bengal	..	40-1A, Free School Street	.. ditto
Chakravarti, Purna Chandra	.. Accountant, Begg, Dunlop & Co, Ld	..	2, Hare Street	.. .. ditto
Chakravarti, Radhika Ranjan	.. Assistant, University College	..	Senate House	.. .. ditto
Chakravarti, Rajendra Chandra, BA	Assistant, Board of Revenue, Bengal	..	Writers' Buildings	.. .. ditto
Chakravarti, Rajendra Kumar	.. Head Clerk, Office of the Inspector of Schools, Presidency Division		40-1A, Free School Street	.. ditto
Chakravarti, Rajendra Mohan	.. Overseer, Suburban Division, P W D ..	..	Writers' Buildings	.. .. ditto
Chakravati, Rajendra Nath, BA	.. Assistant, Martin & Co	..	12,Mission Row	.. .. ditto
Chakravarti, Rajendra N ..	.. Clerk, Calcutta Improvement Trust	..	5, Clive Street	.. .. ditto

No.	Names.	Style or calling.	Residence or place of business.	Religion.
	Chakravarti, Ramani Mohan, BA ..	Stenographer, Bengali Translator's Office	Writers' Buildings	Hindu
	Chakravarti, Ramaprasad . ..	Assistant, Accountant-General's Office, Bengal	Treasury Buildings	ditto
	Chakravarti, Ramendra Nath ..	Head Assistant Teacher, Government School of Art, Calcutta ..	28, Chowringhee	ditto
	Chakravarti, Ramesh Chandra, BA ..	Assistant, Martin & Co	12, Mission Row	ditto
	Chakravarti, Rameshwar ..	Assistant, Burn & Co, Ld	12, Mission Row	ditto
	Chakravarti, Ramkrishna, MA ..	Assistant, Calcutta University	Senate House	ditto
	Chakravarti, Rasik Lal ..	Head Clerk, Income-tax Office	1, Hare Street	ditto
	Chakravarti, Rebati Raman ..	Cashier, Guranteed Relief Syndicate, Ld	14, Clive Street	ditto
	Chakravarti, R R	Assistant, Oriental Government Security Life Assurance Co, Ld	2, Clive Row	ditto
	Chakravarti, Sanat Kumar ..	Assistant, Andrew Yule & Co, Ld	8, Clive Row	ditto
	Chakravarti, Satish Chandra ..	Assistant, Surveyor's Department, Calcutta Corporation ..	Municipal Office	ditto
	Chakravarti, Satish Chandra ..	Clerk (Map Record & Issue), Survey of India	13, Wood Street	ditto
	Chakravarti, Satyaprasad ..	Assistant, Accountant-General's Office, Bengal	Treasury Buildings	ditto
	Chakravarti, Satyendra Nath ..	Offg. Accountant, Accountant-General's Office, Bengal ..	Treasury Buildings	ditto
	Chakravarti, S C	Clerk, Burmah-Shell Co of India, Ld	Hongkong House	ditto
	Chakravarti, Shailesh Kumar, B.Sc. ..	Food Inspector, Calcutta Corporation, District III	Hogg Street	ditto
	Chakravarti, Shitaldas, BA ..	Assistant, Accountant-General's Office, Bengal	Treasury Buildings	ditto
	Chakravarti, Shyama Charan ..	Clerk, Alliance Assurance Co, Ld	2, Hare Street	ditto
	Chakravarti, Shyamapada ..	Clerk, Traffic Department, E B R	3, Kaylaghat Street	ditto

Chakravarti, Shyamapada	..	Professor, Bangabasi College	25 1, Scott Lane	ditto
Chakravarti, Sitendra Nath	..	Clerk, C. A. O.'s Office, E I R	E I R House	ditto
Chakravarti, S N	..	Head Clerk, Traffic, Calcutta Tramways Co, Ld	7, Church Lane	ditto
Chakravarti, Sudhir Chandra	..	Assistant, Begg, Dunlop & Co, Ld	2, Hare Street	ditto
Chakravarti, Sudhirendra, B COM.	..	Assistant, Accountant-General's Office, Bengal	Treasury Buildings	ditto
Chakravarti, Surendra Chandra	..	Clerk, Accounts Department, E B R	3, Kaylaghat Street	ditto
Chakravarti, Surendra Nath	..	Surveyor and Valuer, Land Acquisition Office	5, Bankshall Street	ditto
Chakravarti, Surendra Nath	..	Superintendent of Textile Demonstrations, Industries Department, Bengal.	40-1A, Free School Street	ditto
Chakravarti, Suresh Chandra	..	Accountant, Adair Dutt & Co, Ld	5, Dalhousie Square	ditto
Chakravarti, Taracharan	..	Assistant, Accountant-General's Office, Bengal	Treasury Buildings	ditto
Chakravarti, Tarak Chandra	..	Traveller, Blackie & Sons (India), Ld	285-11, Bowbazar Street	ditto
Chakravarti, Tulsi	..	Stenographer, Paterson Engineering Co (India) Ld	2, Dalhousie Square	ditto
Chakravarti, Upendra Nath	..	Assistant, P & O Banking Corporation, Ld	1, Fairlie Place	ditto
Champati, Binode Bihari	..	Clerk, Accounts Office, E I R	E I R House	ditto
Chanda, Binode Bihari, BA	..	Assistant, Government of India Press	8, Hastings Street	ditto
Chanda, Sudhir Chandra, B COM.	..	Accounts Clerk, Ex. Engineer's Office, Damodar Division, P W D	Treasury Buildings	ditto
Chandra, Amarendra Nath	..	Clerk, C. A. O.'s Office, E I R	E I R House	ditto
Chandra, Ashutos	..	Assistant, Balmer, Lawrie & Co, Ld	103, Clive Street	ditto
Chandra, Balai Lal	..	Hd Assistant, Juggilal Kamlapat	76, Cotton Street	ditto
Chandra, Basanta Bihari, MA	..	Librarian, Calcutta University	Senate House	ditto

No.	Names.	Style or calling.	Residence or place of business.	Religion.
	Chandra, Bipin Krishna ..	.. Assistant, Accountant-General's Office, Bengal ..	.. Treasury Buildings	Hindu
	Chandra, Gocul Chandra	.. Clerk, National Bank of India, Ld	.. 104, Clive Street	ditto
	Chandra, Hari Kishore	.. Assistant Estate Superintendent, Port Commissioners' Office	.. Strand Road	ditto
	Chandra, Kanailal	.. Clerk, Gillanders, Arbuthnot & Co ..	.. 8, Clive Street	ditto
	Chandra, Krishnadas	.. Estimator, Western Electrical Dn, P W D ..	.. Writers' Buildings	ditto
	Chandra, Manilal ..	.. Accountant, Scottish Church College	.. 4, Cornwallis Square	Christian
	Chandra, Narendra K ..	.. Accounts Clerk, E B R	.. 3, Kaylaghat Street	Hindu
	Chandra, Narendra Nath	.. Accountant, Phœnix Assurance Co, Ld	.. 28, Dalhousie Square	ditto
	Chandra, Pannalal ..	.. Clerk, Post Audit, Port Commissioners' Office ..	.. Strand Road	ditto
	Chandra, Satish Chandra, MSC	.. Chemist, Paterson Engineering Co (India), Ld ..	.. 2, Dalhousie Square	ditto
	Chandra, Sharat Chandra	.. Reader, Government of India Press	.. 8, Hastings Street	ditto
	Chandra, S N ..	.. Apprentice, Oriental Govt Security Life Assurance Co, Ld	.. 2, Clive Row	ditto
	Chandra, Surendra Nath	.. Clerk, Ralli Brothers, Ld	.. 16, Hare Street	ditto
	Chandra, Surendra Nath	.. Assistant, Bird & Co	.. 1-1, Clive Street	ditto
	Chatarji, Abanikanta	.. Assistant, Public Health Department, Bengal ..	.. Writers' Buildings	ditto
	Chatarji, Aditya Narayan	.. Clerk, Jardine, Skinner & Co	.. 4, Clive Row	ditto
	Chatarji, Amarendra Nath	.. Assistant, Burn & Co, Ld	.. 12, Mission Row	ditto

Chatarji, Ambuj Lal	..	Assistant, Office of the Inspector-General of Registration, Bengal	Writers' Buildings	..	ditto
Chatarji, Amulya Chandra	..	Clerk, C O P S Office, E I R	E I R House	..	ditto
Chatarji, Amulya Krishna	..	Assistant, Balmer, Lawrie & Co, Ld	103, Clive Street	..	ditto
Chatarji, Amulya Kumar	..	Clerk, Office of the Controller of Army Factory Accounts ..	6, Esplanade, East	..	ditto
Chatarji, Anath Nath	..	Book-Keeper, Birkmyre Brothers	6, Clive Row	..	ditto
Chatarji, Anil Chandra	..	Stenographer, I B P Co, Ld	8, Clive Street	..	ditto
Chatarji, Anil P ..	..	Clerk, Poppe, Delius & Co	2 & 3, Clive Row	..	ditto
Chatarji, A R ..	..	Clerk, Burmah-Shell Co of India, Ld	Hongkong House	..	ditto
Chatarji, Ashutos ..	..	Assistant, Bengal Secretariat, Judicial Department ..	Writers' Buildings	..	ditto
Chatarji, Ashwini Kumar	..	Clerk, Gillanders, Arbuthnot & Co	8, Clive Street	..	ditto
Chatarji, Asima Kumar, BA	..	Assistant, Bengal Secretariat, Marine Department	Writers' Buildings	..	ditto
Chatarji, Atul Krishna	..	Accountant, Presidency College	86-1, College Street	..	ditto
Chatarji, Atul Krishna	..	Assistant, Bengal Chamber of Commerce	2, Clive Street	..	ditto
Chatarji, Atulpada ..	..	Assistant, Calcutta Improvement Trust	5, Clive Street	..	ditto
Chatarji, Balai Chand	..	Clerk, Assessor's Department, Calcutta Corporation ..	Municipal Office	..	ditto

No.	Names.	Style or calling.	Residence or place of business.	Religion.
	Chatarji, Bankim Chandra	.. Clerk, Engineer's Office, E B R	.. 3, Kaylaghat Street	Hindu
	Chatarji, Bankim Chandra	.. Assistant, Office of the I-G of Police	.. Writers' Buildings	ditto
	Chatarji, Basudeb	.. Assistant, Office of the Director of Industries, Bengal	.. 40-1A, Free School Street ..	ditto
	Chatarji, Beni Madhab	.. Assistant, Accounts Department, Calcutta Corporation	.. Municipal Office	ditto
	Chatarji, Bhabani Mohan, MA	.. Sub-Head, C A O's Office, E I R	.. E I R House .. —	ditto
	Chatarji, Bhubaneshwar	.. Assistant, Accountant-General's Office, Bengal ..	.. Treasury Buildings	ditto
	Chatarji, Bhupati Bhusan	.. Stenographer, Bengal Secretariat, Finance Department	.. Writers' Buildings	ditto
	Chatarji, Bhupati Nath	.. Stenographer, Zoological Survey of India ..	.. Indian Museum	ditto
	Chatarji, Bhupendra Nath	.. Inspector of Lightning Conductors, Superintending Engineer's Office, Electrical Circle, Bengal	Writers' Buildings	ditto
	Chatarji, Bhupendra Nath	.. Stenographer, Bengal Secretariat, Finance Department	.. Writers' Buildings	ditto
	Chatarji, Bhupendra Nath	.. Assistant, Burn & Co, Ld — ..	.. 12, Mission Row	ditto
	Chatarji, Bibhu Charan, MSC, PHD	.. Analyst, Calcutta Corporation	.. Municipal Office	ditto
	Chatarji, Bibhuti Bhusan, BL	.. Court Clerk, C C M's Office, E I R	.. E I R House	ditto
	Chatarji, Bibhuti Bhusan	.. Surveyor, Calcutta Corporation, District II ..	.. 22, Mirzapore Street	ditto
	Chatarji, Bibhuti Bhusan	.. Assistant, Accountant-General's Office, Bengal ..	.. Treasury Buildings	ditto
	Chatarji, Bibhuti Bhusan	.. Accountant, Calcutta University	.. Senate House	ditto

Chatarji, Bijaya Krishna	Assistant Superintendent, Accounts Office, E B R	3, Kaylaghat Street		ditto
Chatarji, Binaya Krishna	Head Clerk, Ewing & Co, Ld	4, Clive Row		ditto
Chatarji, Binaya Krishna	Assistant, Commercial Intelligence Department	1, Council House Street		ditto
Chatarji, Bipin Bihari	Clerk, Harrisons & Crosfield, Ld	6, Church Lane		ditto
Chatarji, Birendra Nath	Assistant, Surveyor-General Office	13, Wood Street		ditto
Chatarji, B N	Clerk, Calcutta Mint	47, Strand Road		ditto
Chatarji, Chandi Charan	Clerk, C A O's Office, E I R	E I R House		ditto
Chatarji, Chandicharan	Clerk, C C M's Office, E I R	E I R House		ditto
Chatarji, Chandra Kanta	Cashier, Nestle & Anglo-Swiss Condensed Milk (Export) Co, Ld	9-A, Clive Street		ditto
Chatarji, Chuni Lal	Clerk, Assessors' Department, Calcutta Corporation	Municipal Office		ditto
Chatarji, Chuni Lal	Assistant, Bird & Co	1-1, Clive Street		ditto
Chatarji, Dakshina Kumar	Clerk, Licensed Measurers Department	2, Clive Street		ditto
Chatarji, Debendra Nath	Assistant, Nestle and Anglo-Swiss Condensed Milk (Export) Co, Ld	9-A, Clive Street		ditto
Chatarji, Debendra Nath	Clerk, Office of the Controller of Army Factory Accounts	6, Esplanade, East		ditto
Chatarji, Debendra Nath	Assistant, Calcutta University	Senate House		ditto
Chatarji, Dhirendra Nath	Assistant, Accountant-General's Office, Bengal	Treasury Buildings		ditto

No.	Names.	Style or calling.	Residence or place of business.	Religion.
	Chatarji, Dhirendra Nath, B Com	.. Assistant, Office of the Controller of Currency	.. .. Treasury Buildings	Hindu
	Chatarji, Dhirendra Nath	.. Supervisor, Mathematical Instrument Office	.. .. 15, Wood Street	ditto
	Chatarji, Dhirendra Nath	.. Accountant, Paterson Engineering Co (India), Ld	.. .. 2, Dalhousie Square	ditto
	Chatarji, Durgadas	.. Assistant, Andrew Yule & Co, Ld	.. 8, Clive Row	ditto
	Chatarji, Durgadas	.. Assistant, N R Roy & Co	.. 7, Lyons Range	ditto
	Chatarji, Dwarka Nath	.. Clerk, Health Department, Calcutta Corporation	.. .. Municipal Office	ditto
	Chatarji, Dwijendra Nath	.. Head Clerk, W T Henley's Telegraph Works Co, Ld	.. Old Court House Corner ..	ditto
	Chatarji, Dyoti Nath	.. Assistant, Andrew Yule & Co, Ld	.. 8, Clive Row	ditto
	Chatarji, Ganesh Chandra	.. Clerk, C A O's Office, E I R	.. E I R House	ditto
	Chatarji, Girindra Mohan, BA	.. Clerk, Calcutta Corporation, D E I ..	.. 79, Cornwallis Street	ditto
	Chattarji, Gokul Krishna	.. Clerk (Map Record & Issue), Survey of India ..	.. 13, Wood Street	ditto
	Chatarji, Gourhari	Estimator, Martin & Co	.. 12, Mission Row	ditto
	Chatarji, Haradhan	Assistant, F W Heilgers & Co	.. 1-1, Clive Street	ditto
	Chatarji, Harendrakumar	.. Clerk, C O S's Office, E I R	.. E I R House	ditto
	Chatarji, Haribilas	Assistant, Bengal Secretariat, Revenue Department	.. Writers' Buildings	ditto

Chatarji, Haridas	..	Assistant, Andrew Yule & Co, Ld	..	8, Clive Row	ditto
Chatarji, Haridhan	..	Assistant, Calcutta University	..	Senate House	ditto
Chatarji, Haridhan	..	Assistant, Mackinnon, Mackenzie & Co	..	16, Strand Road	ditto
Chatarji, Hari Gopal, MA	..	Assistant, Calcutta University	..	Senate House	ditto
Chatarji, Haripada	..	Clerk, Collection Dept, Calcutta Corporation	..	Municipal Office	ditto
Chatarji, Haripada	..	Clerk, Royal Insurance Co, Ld	..	26 & 27, Dalhousie Square	ditto
Chatarji, Haripada	..	Assistant, Accountant-General's Office, Bengal	..	Treasury Buildings	ditto
Chatarji, Harisadhan	..	Clerk, Licensed Measurers Department	..	2, Clive Street	ditto
Chatarji, Hemanta Kumar, BA	..	Assistant, Board of Revenue, Bengal	..	Writers' Buildings	ditto
Chatarji, Hemendra Nath, MA, BL	..	Assistant, Calcutta University	..	Senate House	ditto
Chattarji, Hiralal	..	Assistant, Grahams Trading Co. (India), Ld	..	6, Lyons Range	ditto
Chatarji, Hirendra Nath, MA	..	Assistant, Office of the Controller of Currency	..	Treasury Buildings	ditto
Chatarji, Hirendra Nath, BA	..	Assistant, Commercial Intelligence Department, India	..	1, Council House Street	ditto

No.	Names.	Style or calling.	Residence or place of business.	Religion.
	Chatarji, Hirendra Nath ..	Head Clerk, Traffic Department, E B R ..	.. 3, Kaylaghat Street	Hindu
	Chatarji, H L	Cashier, W. Leslie & Co ..	.. 19, Chowringhee	ditto
	Chatarji, H M	Clerk, Burmah-Shell Co of India, Ld	.. Hongkong House	ditto
	Chatarji, H P	Reader, P. S. Office, E I R	.. E I R House	ditto
	Chatarji, Hrisikesh	Assistant, Mackinnon, Mackenzie & Co	.. 16, Strand Road	ditto
	Chatarji, Indra Bhusan	Book-keeping Clerk, Stewarts and Lloyds, Ld ..	.. 6, Royal Exchange Place ..	ditto
	Chatarji, Indubhushan	Stenographer, Bengal Chamber of Commerce ..	.. 2, Clive Street ..	ditto
	Chatarji, Jaladhar	Assistant, Surgeon-General's Office, Bengal ..	.. Writers' Buildings ..	ditto
	Chatarji, Janaki Nath MA ..	Superintendent, T M's Department, Port Commissioners' Office	Strand Road	ditto
	Chatarji, Jatindra Nath, BA ..	Asistant, Office of the Controller of Currency ..	.. Treasury Buildings	ditto
	Chatarji, Jatish Chandra, BSC ..	Articled Clerk, U M Chaudhuri & Co	.. 12-1, Old Post Office Street ..	ditto
	Chatarji, Jibandhan	Clerk, Turner, Morrison & Co, Ld	.. 6, Lyons Range	ditto
	Chatarji, Jiban Krishna	Assistant, Calcutta University	.. Senate House	ditto
	Chatarji, Jiban Krishna	Assistant, Imperial Chemical Industries (India), Ld	.. 18, Strand Road	ditto
	Chatarji, Jiban Lal	Salesman, Dodge and Seymour, Ld	.. Tower House, Chowringhee Square ..	ditto
	Chatarji, Jitendra Nath, BA ..	Assistant, Accountant-General's Office, Bengal ..	.. Treasury Buildings	ditto

Chatarji, Jitendra Nath ..	.. Assistant, Brooke Bond (India), Ld	.. 2, Metcalfe Street ..	..	ditto
Chatarji, Jnanendra Lal ..	.. Assistant, Education Department, Bengal Secretariat	.. Writers' Buildings ..		ditto
Chatarji, Jogesh Chandra	.. Assistant, Burn & Co, Ld	.. 12, Mission Row ..		ditto
Chatarji, Jyotirmaya, MSc	.. Demonstrator, Scottish Church College	.. 4, Cornwallis Square ..	..	ditto
Chatarji, Jyotish Chandra	.. Assistant, Office of the Superintending Engineer, S-W Circle, P W D	Treasury Buildings ..	..	ditto
Chatarji, Jyotish Chandra	.. Stenographer, Longmans Green & Co	.. 6, Old Court House Street	..	ditto
Chatarji, Jyotish Chandra	.. Assistant, Central Stationery Office	.. 3, Church Lane ..	..	ditto
Chatarji, Kali Charan ..	.. Assistant, Calcutta University	.. Senate House ..	..	ditto
Chatarji, Kali Charan ..	.. Assistant Cashier, Sun Life of Canada	.. 12, Dalhousie Square, East		ditto
Chatarji, Kalikrishna ..	.. Clerk, C. O. P. S. Office, E I R	.. E I R House ..		ditto
Chatarji, Kalipada, BSc, BE	.. Assistant, Holmes, Wilson & Co, Ld	.. Norton Buildings ..	..	ditto
Chatarji, Kalipada ..	.. Section Superintendent, Engineer's Office, E B R ..	.. 3, Kaylaghat Street ..	..	ditto
Chatarji, Kalipada ..	.. Accounts Clerk, I B Petroleum Co, Ld	.. 8, Clive Street ..	..	ditto
Chatarji, Kamala Charan	.. Assistant, Office of the Controller of Currency ..	.. Treasury Buildings ..	..	ditto
Chatarji, K D	.. Assistant, Guest, Keen, Williams, Ld	.. 7, Council House Street ..	..	ditto
Chatarji, Krishna K ..	.. Head Clerk, Traffic Department, E B R	.. 3, Kaylaghat Street ..	..	ditto
Chatarji, Krishna Kumar	.. Assistant, Bird & Co	.. 1-1, Clive Street ..	..	ditto

No.	Names.	Style or calling.	Residence or place of business.	Religion.
	Chatarji, Krishna Lal ..	.. Clerk, Lloyds Bank, Ld	.. 101-1, Clive Street	Hindu
	Chatarji, Kshetra Nath ..	.. Assistant, Bird & Co	.. 1-1, Clive Street	ditto
	Chatarji, Kshitish Chandra	.. Sub-Head, Audit Office, E B R ..	.. 3, Kaylaghat Street	ditto
	Chatarji, Kunja Bihari ..	.. Head Clerk, Kalamazoo, (Sales), Ld	.. 4, Fairlie Place	ditto
	Chatarji, Kunja Lal ..	.. Clerk, Post Audit, Port Commissioners' Office ..	.. Strand Road	ditto
	Chatarji, Lal Bihari ..	.. Clerk, Gillanders, Arbuthnot & Co	.. 8, Clive Street	ditto
	Chatarji, Lal Bihari ..	.. Assistant, Macneill & Co	.. 2, Fairlie Place	ditto
	Chatarji, Lalit Kumar ..	.. Assistant, Andrew Yule & Co, Ld	.. 8, Clive Row	ditto
	Chatarji, Lalit Mohan ..	.. Assistant, Mackinnon, Mackenzie & Co	.. 16, Strand Road	ditto
	Chatarji, Lalit Mohan ..	.. Cashier, Thomas Cook & Sons, Ld	.. 4, Dalhousie Square	ditto
	Chatarji, Lalit Mohan ..	.. Assistant, Office o the I-G of Police	.. Writers' Buildings	ditto
	Chatarji, M ..	.. Assistant, Imperial Record Department	.. 3, Government Place, West ..	ditto
	Chatarji, Makhanlal ..	.. Assistant, Commercial Intelligence Department ..	.. 1, Council House Street	ditto
	Chatarji, Makhanlal ..	.. Clerk, Calcutta Improvement Trust	.. 5, Clive Street	ditto
	Chatarji, Makhan Lal ..	.. Assessor, I. T. Office	.. 6, Esplanade, East	ditto
	Chatarji, Manmohan ..	.. Assistant, Davenport & Co, Ld	.. 6, Church Lane	ditto

Chatarji, Manindra Kumar, MA, BL	Assistant, Calcutta University	Senate House	ditto
Chatarji, Manindra N	Clerk, Spencer & Co, Ld	32, Chowringhee	ditto
Chatarji, Manindra Nath	Assistant, Price, Waterhouse, Peat & Co	B-4, Clive Buildings	ditto
Chatarji, Manmatha Nath	Assistant, Office of the Controller of Currency	Treasury Buildings	ditto
Chatarji, Manmatha Nath	Assistant Store Keeper, Calcutta Improvement Trust	5, Clive Street	ditto
Chatarji, Manmatha Nath	Assistant, Office of the Geological Survey of India	27, Chowringhee	ditto
Chatarji, Manoranjan, BSc	Divisional Accountant, Accountant-General's Office, Bengal	Treasury Buildings	ditto
Chatarji, M K	Commercial Assistant, Reuters, Ld	26-7, Dalhousie Square	ditto
Chatarji, Mrityunjaya	Ledger-keeper, Geo Henderson & Co, Ld	101-1, Clive Street	ditto
Chatarji, Mrityunjaya	Assistant, Commercial Union Assurance Co, Ld	32, Dalhousie Square	ditto
Chatarji, Nagendra N	Assistant, Grahams Trading Co (India), Ld	6, Lyons Range	ditto
Chatarji, Nagendra Nath, BA	Assistant, Office of the I-G of Police	Writers' Buildings	ditto
Chatarji, Nalinaksha	Assistant, Begg, Dunlop & Co, Ld	2, Hare Street	ditto
Chatarji, Nalin Bihari	Clerk, W T Henley's Telegraph Works Co, Ld	Old Court House Corner	ditto
Chatarji, Nalin Krishna	Assistant, Mackinnon Mackenzie & Co	16, Strand Road	ditto
Chatarji, Nalini Mohan	Overseer, Dredger & Stores Subdivisions	3, Charnock Place	ditto
Chatarji, Nanda Gopal	Examiner of Stores, Indian Stores Department (Inspection)	6, Esplanade East	ditto
Chatarji, Nanda Lal	Assistant, Andrew Yule & Co, Ld	8, Clive Row	ditto
Chatarji, Nanda Lal	Clerk, Gillanders, Arbuthnot & Co	8, Clive Street	ditto

No.	Names.	Style or calling.	Residence or place of business.	Religion.
	Chatarji, Nani Gopal ..	Assistant, Bird & Co	1-1, Clive Street	Hindu
	Chatarji, Nani Gopal ..	Head Clerk, Mechl Department, E B R	3, Kaylaghat Street	ditto
	Chatarji, Narayan Ch. ..	Steno-typist, C. O. P. S. Office, E I R	E I R House	ditto
	Chatarji, Narayan Das ..	Assistant, Accountant-General's Office, Bengal	Treasury Buildings	ditto
	Chatarji, Narendra Krishna, BSC ..	Assistant Analyst, Bengal Public Health Laboratory ..	Chittaranjan Avenue	ditto
	Chatarji, Narendra Nath ..	Section Superintendent, Engineer's Office, E B R	3, Kaylaghat Street	ditto
	Chatarji, Narendra Nath ..	Assistant, Bengal Chemical and Pharmaceutical Works, Ld ..	31, Chittaranjan Avenue, South ..	ditto
	Chatarji, Naresh Chandra ..	Assistant, Legislative Department, Bengal	Council House	ditto
	Chatarji, N B ..	Assistant Bullion Keeper, Calcutta Mint	47, Strand Road	ditto
	Chatarji, N C	Cashier, Manufacturers' Life Insurance Co	27, Dalhousie Square	ditto
	Chatarji, Nirad Bihari	Clerk, C O S Office, E I R	E I R House	ditto
	Chatarji, Niranjan, BA	Assistant, F C Pallachi & Co	7, Royal Exchange Place ..	ditto
	Chatarji, Nirmal Chandra ..	Head Clerk, North British & Mercantile Insurance Co, Ld ..	101-1, Clive Street	ditto
	Chatarji, Nirmal Nath, MSC ..	Assistant Lecturer, Calcutta University	92, Upper Circular Road ..	ditto
	Chatarji, N N	Clerk, C E S C, Ld	Victoria House	ditto
	Chatarji, Nripendra Kumar ..	Sr Clerk, Office of the Controller of Purchase, Indian Stores Department	6, Esplanade, East	ditto
	Chatarji, Nritya Gopal	Clerk, Turner, Morrison & Co, Ld	6, Lyons Range	ditto
	Chatarji, Panchanan	Sr Tester, C E S C, Ld	Victoria House	ditto

Chatarji, Panchanan	..	Salesman, D N Biswas & Co	10, Dalhousie Square, East ..	ditto
Chatarji, Panchudhan, MA	..	Assistant Superintendent, Office of the Controller of Currency ..	Treasury Buildings	ditto
Chatarji, Pangsu Bhusan	..	Clerk, Office of the Controller of Army Factory Accounts ..	6, Esplanade, East	ditto
Chatarji, Paresh Nath ..	..	Clerk, Licensed Measurers Department	2, Clive Street	ditto
Chatarji, P C ..	..	Partner, Ganguli & Chatarjea	10-C, Government Place, East ..	ditto
Chatarji, Phani Bhusan ..	..	Estimator, Executive Engineer's Office, Damodar Division ..	Treasury Buildings	ditto
Chatarji, Phani Bhusan, BA	..	Assistant, Explosives Office	1, Council House Street	ditto
Chatarji, Phanindra Bhusan	..	Overseer, Engineering Department, Port Commissioners' Office ..	Strand Road	ditto
Chatarji, P K	..	Senior Assistant Estate Superintendent, Port Commissioners' Office.	Strand Road	ditto
Chatarji, Prabhas Chandra	..	Assistant, Accountant-General's Office, Bengal	Treasury Buildings	ditto
Chatarji, Prabhas Chandra	..	Assistant, Martin & Co	12, Mission Row	ditto
Chatarji, Prabodh Chandra, BSC	..	Assistant, Board of Revenue, Bengal	Writers' Buildings	ditto
Chatarji, Prabodh Chandra	..	Assistant, Balmer Lawrie & Co, Ld	103, Clive Street	ditto
Chatarji, Prabodh Chandra	..	Assistant, James Finlay & Co, Ld	1, Clive Street	ditto
Chatarji, Prabodh Chandra	..	Chief Clerk, Bhattacharjee & Co	28, Pollock Street	ditto
Chatarji, Prabodh Kumar, BSC, BL, ADA		Examiner of Accounts, Income-tax Office	1, Hare Street	ditto
Chatarji, Prafulla Chandra	...	Stenographer, Agent's Office, E B R	3, Kaylaghat Street	ditto
Chatarji, Prakash Chandra, BA	..	Assistant, Bengali Translator's Office	Writers' Buildings	ditto
Chatarji, Pramatha Nath	..	Eng Supervisor, Calcutta Corporation, District No I ..	79, Cornwallis Street ..	ditto

No.	Names.	Style or calling.	Residence or place of business.	Religion.
	Chatarji, Pramatha Nath ..	Clerk, C A O's Office, E I R	E I R House	Hindu
	Chatarji, Pramatha Nath ..	Assistant, Royal Insurance Co, Ld	26 & 27, Dalhousie Square ..	ditto
	Chatarji, Pramatha Nath ..	Assistant, Accountant-General's Office, Bengal	Treasury Buildings	ditto
	Chatarji, Prasad Chandra ..	Clerk, Kilburn & Co	4, Fairlie Place	ditto
	Chatarji, Prasad Das	Ledger-keeper, Bombay Co, Ld	19, British Indian Street ..	ditto
	Chatarji, Pratul Bihari	Assistant, Board of Revenue, Bengal	Writers' Buildings	ditto
	Chatarji, Pravas Chandra ..	Assistant, Office of the Private Secretary, to H E the Governor of Bengal	Government House	ditto
	Chatarji, Pulin Bihari	Assistant, Accountant-General's Office, Bengal	Treasury Buildings	ditto
	Chatarji, Pulin Krishna	Assistant, Accountant-General's Office, Bengal	Treasury Buildings	ditto
	Chatarji, Rajani Kanta	Clerk, Engineering Department, Port Commissioners' Office ..	Strand Road	ditto
	Chatarji, Rajani Kanta	Office Supdt, Personnel Branch, Agency Dept, E B R ..	3, Kaylaghat Street	ditto
	Chatarji, Raj Kumar	Demonstrator, Vidyasagar College	39, Shankar Ghose Lane	ditto
	Chatarji, Rakhal Chandra ..	Assistant, Office of the Inspector-General of Police	Writers' Buildings	ditto
	Chatarji, Ram Chandra	Clerk, Engineer's Office, E B R	3, Kaylaghat Street	ditto
	Chatarji, Rasamaya, MA ..	Professor, Ripon College	24, Harrison Road	ditto
	Chatarji, R B	Clerk, C E S C, Ld	Victoria House	ditto
	Chatarji, Sanat Kumar, BA ..	Assistant, Central Stationery Office	3, Church Lane	ditto
	Chatarji, Sarada Prasad	Clerk, C E's Office, E I R	E I R House	ditto

Chatarji, Saroj Kumar ..	.. Assistant, Martin & Co	12, Mission Row	ditto
Chatarji, Satish Ch.	.. Clerk, C. A. O.'s Office, E I R	E I R House	ditto
Chatarji, Satish Chandra	.. Head Estimator, Office of the Superintending Engineer, Presidency Circle, P W D	Writers' Buildings	ditto
Chatarji, Satish Chandra	.. Clerk, *Statesman*, Ld	*Statesman* House	ditto
Chatarji, Satish Chandra	.. Assistant, Land Revenue Department, Calcutta Collectorate ..	3, Charnock Place	ditto
Chatarji, Satish Chandra	.. Assistant, Accountant-General's Office, Bengal	Treasury Buildings	ditto
Chatarji, Satkari ..	.. Assistant, McLeod & Co	28, Dalhousie Square	ditto
Chatarji, Satyacharan ..	.. Auditor, George Read & Co	Avenue House, Chowringhee Square	ditto
Chatarji, Satyacharan	.. Supervisor, Martin & Co	12, Mission Row	ditto
Chatarji, Satyendra Nath	.. Assistant, Accountant-General's Office, Bengal	Treasury Buildings	ditto
Chatarji, S C ..	.. Agency Supervisor, Manufacturers Life Insurance Co ..	27, Dalhousie Square	ditto
Chatarji, Shachindra Nath	.. Clerk, Traffic Department, E B R	3, Kaylaghat Street ..	ditto
Chatarji, Shachindra Nath	.. Assistant, Commercial Union Assurance Co, Ld	32, Dalhousie Square	ditto
Chatarji, Shailendra Krishna	.. Broker, Anderson, Wright & Co.	22, Strand Road	ditto
Chatarji, Shailendra Nath	.. Clerk, Royal Insurance Co, Ld	26 & 27, Dalhousie Square ..	ditto
Chatarji, Shambhu Nath, BA	.. Assistant, Bengal Secretariat, Political (Jails) Department ..	Writers' Buildings	ditto
Chatarji, Shanta Kumar ..	.. Assistant Superintendent, Agent's Office, E B R	3, Kaylaghat Street	ditto
Chatarji, Shanti Nath ..	.. Cashier, North British & Mercantile Insurance Co, Ld ..	101-1, Clive Street	ditto
Chatarji, Sharat Chandra	.. Assistant, Mackinnon, Mackenzie & Co	16, Strand Road	ditto

No.	Names.	Style or calling.	Residence or place of business.	Religion.
	Chatarji, Shashadhar ..	.. Accountant, Hijli Division, P W D, Bengal ..	.. Writers' Buildings	Hindu
	Chatarji, Shashadhar ..	.. Assistant, Mackinnon, Mackenzie & Co	.. 16, Stand Road	ditto
	Chatarji, Shib Chandra ..	.. Assistant, Mackinnon, Mackenzie & Co	.. 16, Strand Road	ditto
	Chatarji, Shib Charan ..	.. Clerk, Engineer's Office, E B R	.. 3, Kaylaghat Street	ditto
	Chatarji, Shrish Chandra	.. Assistant, Office of the Director of Industries, Bengal	.. 40-1A, Free School Street ..	ditto
	Chatarji, Shyama Ch.	.. Clerk, Sun Life of Canada	.. 12, Dalhousie Square, East ..	ditto
	Chatarji, Shyamapada, BA	.. Head Clerk, Health Department, Calcutta Corporation	.. Municipal Office	ditto
	Chatarji, S N ..	.. Treasurer, Calcutta Tramways Co, Ld ..	.. 7, Church Lane	ditto
	Chatarji, Subodh Chandra	.. Assistant, Board of Revenue, Bengal	.. Writers' Buildings	ditto
	Chatarji, Subodh Chandra, BA	.. Assistant, Accountant-General's Office, Bengal ..	.. Treasury Buildings	ditto
	Chatarji, Subodh Narayan	.. Stenographer, Agent's Office, E B R	.. 3, Kaylaghat Street	ditto
	Chatarji, Sudhir Chandra	.. Assistant, Bird & Co	.. 1-1, Clive Street	ditto
	Chatarji, Sudin Krishna ..	.. Assistant, Controller's Office, Calcutta University ..	.. Senate House	ditto
	Chatarji, Sukumar	.. Foreman, Testing Department, C E S C, Ld ..	.. Victoria House	ditto
	Chatarji, Sukumar	.. Clerk, C. A. O.'s Office, E I R	.. E I R House	ditto
	Chatarji, Sukumar	.. Head Clerk, Marine Department, New Zealand Insurance Co, Ld	26, Dalhousie Square	ditto
	Chatarji, Suniti Nath	.. Assistant, Patent Office	.. 1, Council House Street	ditto
	Chatarji, Surath Chandra	.. Assistant, Ford, Rhodes, Thornton & Co ..	.. Tower House, Chowringhee Square ..	ditto
	Chatarji, Surendra K ..	.. Stenographer, Sun Life of Canada	.. 12, Dalhousie Square, East ..	Christian
	Chatarji, Surendra N	.. Clerk, C A O's Office, E I R	.. E I R House	Hindu

Chatarji, Surendra Nath	.. Head Clerk, License Department, Calcutta Corporation	.. Municipal Office	.. ..	ditto
Chatarji, Surendra Nath	.. Clerk, Gillanders, Arbuthnot & Co ..	.. 8, Clive Street	.. ..	ditto
Chatarji, Surendra Nath	.. Assistant, Photo-Litho Branch, Surveyor-General's Office	.. 14, Wood Street	.. ..	ditto
Chatarji, Surendra Nath	.. Accountant, National Council, Y. M. C. A. ..	.. 5, Russell Street	.. ..	ditto
Chatarji, Surendra Nath	.. Clerk, Shaw, Wallace & Co	.. 4, Bankshall Street	.. ..	ditto
Chatarji, Suresh Chandra, BSC	.. S. A. Superintendent, (Drawing), Survey of India	.. 13, Wood Street	.. ..	ditto
Chatarji, Suresh Chandra	.. Clerk, Army Factory Accounts	.. 6, Esplanade, East	.. ..	ditto
Chatarji, Tarak Chandra	.. Assistant, Commercial Intelligence Department ..	.. 1, Council House Street	..	ditto
Chatarji, Taraknath ..	.. Assistant, Ford, Rhodes, Thornton & Co ..	.. Tower House, Chowringhee Square	..	ditto
Chatarji, Taraprasad, MA	.. Assistant, Commercial Intelligence Department, India	.. 1, Council House Street	.. ..	ditto
Chatarji, Thakahari ..	.. Head Clerk, Traffic Department, E B R ..	.. 3, Kaylaghat Street	.. ..	ditto
Chatarji, Tulsi Charan ..	.. Assistant, Mackinnon, Mackenzie & Co	.. 16, Strand Road	.. ..	ditto
Chatarji, Tulsidas ..	.. Clerk, National City Bank of New York	.. 4, Clive Street	.. ..	ditto
Chatarji, Upendra Mohan	.. Assistant, Martin & Co	.. 12, Mission Row	.. ..	ditto
Chatarji, Upendra N ..	.. Assistant, Grahams Trading Co (India), Ld ..	.. 6, Lyons Range	.. ..	ditto
Chatarji, Upendra Nath ..	.. Chief Clerk, General Accident Fire & Life Assurance Corporation, Ld	7, Hare Street	.. ..	ditto
Chatarji, Upendra Nath ..	.. Assistant, Accountant-General's Office, Bengal ..	.. Treasury Buildings	.. ..	ditto
Chatarji, Upendra Nath ..	.. Stenographer to the Physical Director, Bengal ..	.. Writers' Buildings	.. ..	ditto
Chatarji, Upendra Nath ..	.. Clerk, Gillanders, Arbuthnot & Co	.. 8, Clive Street	.. ..	ditto
Chatarji, Upendra Nath, ..	.. Clerk, Mechl Department, E B R	.. 3, Kaylaghat Street	.. ..	ditto
Chatarji, Upendra Nath ..	.. Assistant, James Finlay & Co, Ld	.. 1, Clive Street	.. ..	ditto

No.	Names.	Style or calling.	Residence or place of business.	Religion.
	Chaudhuri, Abdul Aziz, BA	.. Assessing Inspector, Calcutta Corporation ..	.. Municipal Office ..	.. Mahomedan
	Chaudhuri, Amulya Mohan	.. Assistant, Surgeon-General's Office, Bengal ..	.. Writers' Buildings ..	.. Hindu
	Chaudhuri, Anukul Chandra	.. Ledger Keeper, Geo. Henderson & Co ..	.. 101-1, Clive Street ..	.. ditto
	Chaudhuri, Azfat Raza, BA	.. Con. Overseer, Calcutta Corporation, District III ..	.. Hogg Street ..	.. Mahomedan
	Chaudhuri, Basanta Kumar	.. Sub-Head, C C M's Office, E I R	.. E I R House ..	.. Hindu
	Chaudhuri, Bhupendra Nath	.. Assistant, Legislative Department, Bengal ..	.. Council House ..	.. ditto
	Chaudhuri, Bijali Bhusan	.. Typist, Office of the Controller of Currency ..	.. Treasury Buildings ..	.. ditto
	Chaudhuri, Bijaya Chandra	.. Assistant, Accounts Department, Calcutta Corporation	.. Municipal Office ..	.. ditto
	Chaudhuri, Binaya Bhusan	.. Typist, Calcutta Improvement Trust ..	.. 5, Clive Street ..	.. ditto
	Chaudhuri, Binaya Kumar, MA	.. Lecturer, Bethune College	.. 181, Cornwallis Street ..	.. ditto
	Chaudhuri, Bishwapati, MA	.. Lecturer, University College	.. Senate House ..	.. ditto
	Chaudhuri, G C ..	.. Accounts Clerk, Executive Engineer's Office, Canals Division	.. Treasury Buildings ..	.. ditto
	Chaudhuri, Haridas, BA	.. Clerk, Health Department, Calcutta Corporation ..	.. Municipal Office ..	.. ditto
	Chaudhuri, Haripada ..	.. Sub-Head, C A O's Office, E I R	.. E I R House ..	.. ditto
	Chaudhuri, Indubhusan ..	.. Clerk, Ralli Brothers, Ld	.. 16, Hare Street ..	.. ditto
	Chaudhuri, J ..	.. Assistant, Mackinnon, Mackenzie & Co	.. 8, Strand Road ..	.. Christian
	Chaudhuri, Jamini Bhusan	.. Assistant, Office of the Controller of Currency ..	.. Treasury Buildings ..	.. Hindu
	Chaudhuri, Jatindra Nath	.. Head Computor, C E's Office, E I R ..	.. E I R House ..	.. ditto

Chaudhuri, Jayantipada ..	.. Assistant, Controller's Office, Calcutta University ..	.. Senate House ..	..	ditto
Chaudhuri, Jiban Krishna	.. Assistant, Patent Office	.. 1, Council House Street	..	ditto
Chaudhuri, Kalidas, MA	.. Teacher, Bangabasi College School	.. 25-1, Scott Lane ..	..	ditto
Chaudhuri, Kaliprasanna	.. Record-keeper, Calcutta Improvement Trust ..	.. 5, Clive Street ..	..	ditto
Chaudhuri, Kanai Nath, MA	.. Assistant, Accountant-General's Office, Bengal ..	.. Treasury Buildings ..	..	ditto
Chaudhuri, Keshab Lal ..	.. Assistant, Calcutta Improvement Trust	.. 5, Clive Street ..	..	ditto
Chaudhuri, Kumud Bandhu	.. Head Clerk, Mechl Department, E B R ..	.. 3, Kaylaghat Street ..	..	ditto
Chaudhuri, M., BA	.. Clerk, Calcutta Mint	.. 47, Strand Road ..	..	ditto
Chaudhuri, Mahendra Nath	.. Head Supervisor, Mathematical Instrument Office ..	.. 15, Wood Street ..	..	ditto
Chaudhuri, Mahomed Ali, BL	.. Sub-Inspector, License Deprtment, Calcutta Corporation	.. Municipal Office ..	..	Mahomedan
Chaudhuri, Nanda Lal ..	.. Assistant, Macneill & Co	.. 2, Fairlie Place ..	..	Hindu
Chaudhuri, Nani Madhav, MA	.. Assistant, Bengali Translator's Office	.. Writers' Buildings ..	..	ditto
Chaudhuri, Phani Bhusan	.. Stenographer & Junior Council Reporter ..	.. Writers' Buildings ..	..	ditto
Chaudhuri, Phani Bhusan, BA	.. Cashier, Hindusthan Co-operative Insurance Society, Ld	.. Hindusthan Buildings ..	..	ditto
Chaudhuri, Pramatha Nath	.. Clerk, Royal Exchange Assurance	.. 1 & 2, Old Court House Corner	..	ditto
Chaudhuri, Rajib Chandra, BSC	.. Shift Engineer, Special Officer's Department, Calcutta Corporation.	Municipal Office ..	..	ditto

No.	Names.	Style or calling.	Residence or place of business.	Religion.
	Chaudhuri, Sarbaribhusan	Stenographer, Office of the Controller of Currency	Treasury Buildings	Hindu
	Chaudhuri, Saroj Kumar	Assistant, Bengal Secretariat, Appointment Department	Writers' Buildings	ditto
	Chaudhuri, Satish Chandra	Clerk, Calcutta Improvement Trust	5, Clive Street	ditto
	Chaudhuri, Satish Chandra	Assistant, Accounts Department, Calcutta Corporation	Municipal Office	ditto
	Chaudhuri, Subodhgobinda, DSC	Assisstant Lecturer, Calcutta University	92, Upper Circular Road	ditto
	Chaudhuri, Sudhir Chandra	Assistant, Office of the Inspector-General of Prisons, Bengal	Writers' Buildings	ditto
	Chaudhuri, Sukumar	Assistant Supdt., Office of the Director of Industries, Bengal	40-1A, Free School Street	ditto
	Chaudhuri, Surendra Chandra	Assistant, Bengal Secretariat, Labour Commr's Office	Writers' Buildings	ditto
	Chaudhuri, Surendra Nath	Clerk, C. E.'s Office, E I R	E I R House	ditto
	Chaudhuri, Surendra Nath	Engineering Overseer, Calcutta Corporation, District I	79, Cornwallis Street	ditto
	Chellam, S V	Stenographer, Kettlewell Bullen & Co, Ld	21, Strand Road	ditto
	Choksey, Fram Pestonji	Assistant Engineer, Construction, C E S C, Ld	Victoria House	Zoroastrian
	Choraria, Phodchand	Under-Broker, F. C. Pallachi & Co	7, Royal Exchange Place	Hindu
	Chudgar, M D	Cashier, Java Sea & Fire Insurance Co, Ld	4, Lyons Range	ditto
	Colah, K S	Partner, Dinshaw and Sorabji	8, Dharamtala Street	Zoroastrian
	Colah, R S	Partner, Dinshaw and Sorabji	8, Dharamtala Street	ditto

D

Dadina, Jamshed Phirozshaw	Proprietor, J. P. Dadina	8, Bowbazar Street		Zoroastrian.
Das, Adhar Chandra, MA	Lecturer, University College	Senate House		Hindu
Das, Adhar Chandra	Assistant, Emigration Office	1, Mission Row		ditto
Das, Akshaya Kumar	Ledger-keeper, Geo Henderson & Co, Ld	101-1, Clive Street		ditto
Das, Amrita Lal	Head Rem Clerk, Assessors' Department, Calcutta Corporation	Municipal Office		ditto
Das, Amrita Lal	Crew Inspector, E B R	3, Kaylaghat Street		ditto
Das, Amrita Lal	Assistant, Office of the Director of Public Health, Bengal	Writers' Buildings		ditto
Das, Anil Krishna	Assistant, Accountant-General's Office, Bengal	Treasury Buildings		ditto
Das, Annada Prasad	Stenographer, Mather & Platt, Ld	7, Hare Street		ditto
Das, Arabinda Chandra	Clerk, Ralli Brothers, Ld	16, Hare Street		ditto
Das, Ashutos	Assistant, Mackinnon, Mackenzie & Co	16, Strand Road		ditto
Das, Ashutos	Clerk, Lloyds Bank, Ld	101-1, Clive Street		ditto
Das, Ashwini Kumar	Surveyor, Calcutta Improvement Trust	5, Clive Street		ditto
Das, Balai Chandra	Assistant, Commercial Union Assurance Co, Ld	32, Dalhousie Square		ditto
Das, Balai Chandra, BSc, BL	Clerk, C A's Office, E I R	E I R House		ditto
Das, Banbihari	Clerk, C A O's Office, E I R	E I R House		ditto
Das, Bijaya Krishna	Clerk, Bengal Smoke Nuisances Commission	3, Charnock Place		ditto
Das, Bijaya Krishna	Clerk, Gillanders, Arbuthnot & Co	8, Clive Street		ditto

No.	Names.	Style or calling.	Residence or place of business.	Religion.
	Das, Binode Bihari ..	.. District Inspector of Schools, Calcutta	.. 40-1A, Free School Street ..	Hindu
	Das, Birendra Lal	.. Assistant, J & R Hutchison, Ld ..	.. 29, Waterloo Street	ditto
	Das, B P ..	.. Dy Accountant, Associated British Machine Tool Makers, Ld ..	6, Old Post Office Street	ditto
	Das, Braja Bihari ..	.. Computor, Lal Chand & Sons	.. 76, Lower Circular Road ..	ditto
	Das, Brajalal ..	.. Clerk, Agent's Office, E I R	.. E I R House	ditto
	Das, C S Madhava	.. Assistant, Army & Navy Stores, Ld	.. 41, Chowringhee	ditto
	Das, Dayal Kumar ..	.. Clerk, Asiatic Society of Bengal	.. 1, Park Street	Christian
	Das, Deb Chandi	.. Clerk, Spencer & Co, Ld	.. 32, Chowringhee	Hindu
	Das, Dhirendra Nath	.. Electrician, John King & Co, Ld	.. 63-2-1, Malanga Lane ..	ditto
	Das, Dinabandhu, BSc ..	.. Lecturer, Calcutta Technical School	.. 110, Surendra Nath Banerjee Street ..	ditto
	Das, Gagan Chandra ..	.. Cashier, Sun Life of Canada	.. 12, Dalhousie Square, East ..	ditto
	Das, Girija Bhusan ..	.. Clerk, Ralli Brothers, Ld	.. 16, Hare Street	ditto
	Das, G L ..	.. Assistant, Mackinnon, Mackenzie & Co	.. 8, Strand Road	ditto
	Das, Haridas ..	.. Head Assistant and Accountant, Victoria Memorial Hall	.. Victoria Memorial Hall ..	ditto
	Das, Haripada ..	.. Clerk, Ralli Brothers, Ld	.. 16, Hare Street	ditto
	Das, Haripada ..	.. Proof Examiner, Photo-Litho Office, Survey of India	.. 14, Wood Street	ditto
	Das, Hem Chandra ..	.. Assistant, Accountant-General's Office, Bengal ..	.. Treasury Buildings	ditto

Das, Himangshu Bimal	Cashier, Taylor's Gramophone Saloon	15-4, Chowringhee	ditto		
Das, Himangshu Sekhar, BE.	Assistant Engineer, J. C. Banerjee, Ld	20, Strand Road	ditto		
Das, Hiralal	Clerk, Jardine, Skinner & Co	4, Clive Row	ditto		
Das, Hiralal	Clerk, Gillanders, Arbuthnot & Co	8, Clive Street	ditto		
Das, Jatindra Nath BA	Assistant, Accountant-General's Office, Bengal	Treasury Buildings	ditto		
Das, Jitendra Mohan	Assistant Lighting Superintendent, Calcutta Corporation	Municipal Office	ditto		
Das, Jitendra Nath	Assistant Superintendent, C O P S Office, E I R	E I R House	ditto		
Das, Jogendra Nath	Clerk, Ralli Brothers, Ld	16, Hare Street	ditto		
Das, Jogesh Chandra	Salesman (Steel), Volkart Brothers	11, Clive Street	ditto		
Das, Joseph Jnanendra Mohan	Assistant, Office of the Inspector-General of Prisons, Bengal	Writers' Buildings	Christian		
Das, Jugal Kishore	Clerk, Turner, Morrison & Co, Ld	6, Lyons Range	Hindu		
Das, Jugal Krishna	Assistant, Accountant-General's Office, Bengal	Treasury Buildings	ditto		
Das, Jyotish Chandra	Clerk, Post-Audit Port Commissioners' Office	Strand Road	ditto		
Das, Kalachand	Assistant, Accountant-General's Office, Bengal	Treasury Buildings	ditto		
Das, Kali Mohan	Levelling Surveyor, Special Officer's Department, Calcutta Corporation	Municipal Office	ditto		
Das, Kalipada, BA	Assistant, Calcutta University	Senate House	ditto		
Das, Kanai Lal	Head Clerk, Shaw, Wallace & Co	4, Bankshall Street	ditto		
Das, Khagendra Nath, MSC	Assistant, Zoological Survey of India	Indian Museum	ditto		
Das, Krishnadhan	Assistant, Surgeon-General's Office, Bengal	Writers' Buildings	ditto		

No.	Names.	Style or calling.	Residence or place of business.	Religion.
	Das, Krishna Kishore, BA	Assistant, Board of Revenue, Bengal	Writers' Buildings	Hindu
	Das, Lakshminarayan	Clerk, C E S C, Ld	Victoria House	ditto
	Das, Lal Mohan, BA	Assistant, Accountant-General's Office, Bengal	Treasury Buildings	ditto
	Das, L M	Assistant, Mackinnon, Mackenzie & Co	8, Strand Road	ditto
	Das, Mahananda	Clerk, Engineer's Office, E B R	3, Kaylaghat Street	ditto
	Das, Manindra Mohan	Assistant, Indian Stores Department (Inspection)	6, Esplanade, East	ditto
	Das, Mihir Lal	Clerk, *Statesman*, Ld	*Statesman* House	ditto
	Das, Nagendra Nath	Steno-typist, W T Henley's Telegraph Works Co, Ld	Old Court House Corner	ditto
	Das, Nagendra Nath	Assistant, James Finlay & Co, Ld	1, Clive Street	ditto
	Das, Nagendra Nath	Foreman, Corporation Workshop	Municipal Office	ditto
	Das, Nagendra Nath	Supervisor, Mathematical Instrument Office	15, Wood Street	ditto
	Das, Nakul Chandra	Audit Inspector, Port Commissioners' Office	Strand Road	ditto
	Das, Nanda Dulal, BA	Assistant, Accountant-General's Office, Bengal	Treasury Buildings	ditto
	Das, Nani Gopal	Clerk, C A O's Office, E I R	E I R House	ditto
	Das, Narendra Nath	Clerk, Ralli Brothers, Ld	16, Hare Street	ditto
	Das, Narendra Nath	Assistant, P & O Banking Corporation, Ld	1, Fairlie Place	ditto

Das, Nihar Ranjan, MA	.. Inspector, License Department, Calcutta Corporation	.. Municipal Office	..	.. ditto
Das, Nirmal Chandra, MSC	.. Clerk, Statistical Office, E I R	.. E I R House	..	.. ditto
Das, Nripendra Nath ..	.. Cle , Office of the Controller of Army Factory Accounts	.. 6, Esplanade, East	..	.. ditto
Das, Nritya Lal ..	.. Assistant, Balmer, Lawrie & Co, Ld	.. 103, Clive Street	..	.. ditto
Das, Panchanon ..	.. Assistant, Presidency Commissioner's Office ..	.. 3, Charnock Place	..	.. ditto
Das, Panchu Gopal ..	.. Accountant, Houghton Butcher (Eastern), Ld ..	.. 10, Hungerford Street	..	.. ditto
Das, Panchu Gopal ..	.. Assistant, Bengal Secretariat, Finance Department	.. Writers' Buildings	..	.. ditto
Das, Parmeshwari ..	.. Clerk, C A O's Office, E I R	.. E I R House	..	.. ditto
Das, P B ..	.. Assistant, Mackinnon, Mackenzie & Co	.. 8, Strand Road	..	.. ditto
Das, Phanindra Krishna, BSC	.. Assistant Analyst, Bengal Public Health Laboratory	.. Chittaranjan Avenue	..	.. ditto
Das, Phanindra Nath ..	.. Assistant, Accountant-General's Office, Bengal ..	.. Treasury Buildings	..	.. ditto
Das P M ..	.. Clerk, Heatley & Gresham, Ld	.. 6, Waterloo Street	..	.. ditto
Das, Prabodh Chandra	.. Clerk, Shaw, Wallace & Co, ...	.. 4, Banshall Street	..	.. ditto
Das, Prakash Chandra ..	.. Assistant, Brooke Bond (India), Ld	.. 2, Metcalfe Street	..	.. ditto
Das, Promode Chandra, MA, BT	.. Assistant Master, Hare School	.. 87, College Street	..	.. Brahmo
Das, Pramode Kumar ..	.. Head Assistant, Income-tax Office	.. 6, Esplanade, East	..	.. Hindu
Das, Pulin Krishna ..	.. Assistant, Geological Survey of India	.. 27, Chowringhee	..	.. ditto
Das, Rabindra Nath ..	.. Clerk, C O S Office, E I R	.. E I R House	..	.. ditto
Das, Radha Shyam ..	.. Ledger-keeper, Geo Henderson & Co, Ld ..	.. 101-1, Clive Street	..	.. ditto
Das, Rai Charan, BA ..	.. Assistant, Calcutta University	.. Senate House	..	.. ditto
Das, Rajani Kanta ..	.. Clerk, Collection Department, Port Commissioners' Office	.. Strand Road	..	.. ditto

No.	Names.	Style or calling.	Residence or place of business.	Religion.
	Das, Rajendra Lal ..	.. Clerk, Marine Section, Port Commissioners' Office ..	.. Strand Road	Hindu
	Das, Rakhal Chandra ..	.. Assistant, Bird & Co	.. 1-1, Clive Street	ditto
	Das, Ramakanta ..	.. Ledger-keeper, Geo Henderson & Co, Ld ..	.. 101-1, Clive Street	ditto
	Das, Raman Bihari ..	.. Clerk, I G N & Ry Co, Ld	.. 4, Fairlie Place	ditto
	Das, Ramani Mohan ..	.. Clerk, Ralli Brothers, Ld	.. 16, Hare Street	ditto
	Das, Ramapati	.. Clerk, Alliance Assurance Co, Ld	.. 2, Hare Street	ditto
	Das, Ramesh Chandra ..	.. Assistant, Kettlewell, Bulien & Co, Ld	.. 21, Strand Road	ditto
	Das, Ramesh Chandra, MA, BL	.. Assistant, Calcutta University	.. Senate House	ditto
	Das, Ramesh Chandra ..	.. Clerk, Shaw, Wallace & Co	.. 4, Bankshall Street	ditto
	Das, Robin ..	.. Assistant, Map Record and Issue Branch, Surveyor-General's Office	.. 13, Wood Street	Christian
	Das, Rohini Kanta, BSc	.. Examiner of Accounts, Income-tax Office ..	.. 3, Government Place, West ..	Hindu
	Das, Santos Kumar ..	.. Engraver, Drawing Branch, Surveyor-General's Office.	.. 13, Wood Street	ditto
	Das, Santos Kumar ..	.. Assistant Cashier, Commercial Union Assurance Co, Ld	.. 32, Dalhousie Square	ditto
	Das, Sarada Kanta ..	.. Assistant, Eastern Bank, Ld	.. 9, Clive Street	ditto
	Das, Satish Chandra ..	.. Assistant, Balmer, Lawrie & Co, Ld	.. 103, Clive Street	ditto
	Das, Satish Chandra ..	.. Assistant, Royal Insurance Co, Ld	.. 26 & 27, Dalhousie Square ..	ditto
	Das, Satish Chandra ..	.. Assistant, Accountant-General's Office, Bengal ..	.. Treasury Buildings	ditto
	Das, Satkari, BSc ..	.. Sub-Head, C A O's Office, E I R	.. E I R House	ditto
	Das, Satyacharan ..	.. Typist, Anderson, Wright & Co	.. 22, Strand Road	ditto
	Das, Satyacharan ..	.. Clerk, Harrisons & Crosfield, Ld, ...	.. 6, Church Lane	ditto

Das, Shrinibas ..	.. Assistant, Surgeon-General's Office, Bengal ..	.. Writers' Buildings .	..	ditto
Das, Shrish Chandra ..	.. Clerk, Gillanders, Arbuthnot & Co	.. 8, Clive Street ..	..	ditto
Das, Shrish Chandra	.. Bill Clerk, License Department, Calcutta Corporation	.. Municipal Office ..	..	ditto
Das, Shrish Chandra, MA	.. Assistant, Accountant-General's Office, Bengal ..	.. Treasury Buildings ..	..	ditto
Das, S K	.. Assistant, Imperial Chemical Industries (India), Ld	.. 18, Strand Road ..	..	ditto
Das, Sudhir Kumar ..	.. Assistant, Martin & Co	.. 12, Mission Row ..	..	ditto
Das, Sudhir Kumar, BSc ..	.. Assistant Analyst, Bengal Public Health Laboratory	.. Chittaranjan Avenue ..	..	ditto
Das, Surendra Nath ..	.. Manager, Holmes Wilson & Co, Ld	.. Norton Buildings ..	..	ditto
Das, Surendra Nath ..	.. Head Clerk, La Martiniere	.. 11, Loudon Street ..	..	ditto
Das, Surendra Nath ..	.. Section Holder, Government of India Press ..	.. 8, Hastings Street ..	..	ditto
Das, Surendra Nath ..	.. Assistant, Presidency College	.. 86-1, College Street ..	..	ditto
Das, Suresh Chandra	.. Clerk, Thomas Cook & Son, Ld	.. 4, Dalhousie Square ..	..	ditto
Das, Sushil Kumar, BSc ..	.. Assistant, Accountant-General's Office, Bengal ..	.. Treasury Buildings ..	..	ditto
Das, Sushil Kumar ..	.. Assistant, Martin & Co	.. 12, Mission Row ..	..	ditto
Das, Swaprakash Chandra	.. Head Assistant, Office of the Superintending Engineer, Presidency Circle, P W D	Writers' Buildings ..	..	Brahmo
Das, Tarak Chandra, MA	.. Lecturer, University College	.. Senate House ..	..	Hindu
Das, Upendra Nath ..	.. Clerk, Ralli Brothers, Ld	.. 16, Hare Street ..	..	ditto
Das, Upendra Nath, MSC	.. Clerk, Health Department, Calcutta Corporation ..	.. Municipal Office ..	..	ditto
Das, Upendra Nath ..	.. Assistant, Macneill & Co	.. 2, Fairlie Place ..	..	ditto

No.	Names.	Style or calling.	Residence or place of business.	Religion.
	Das Gupta, Abinash Chandra, BSc ..	Assistant Analyst, Public Health Laboratory, Bengal ..	Chittaranjan Avenue	Hindu
	Das Gupta, A K	Clerk, Burmah-Shell Co of India, Ld	Hongkong House	ditto
	Das Gupta, Amalendu	Journalist, *Statesman*, Ld	*Statesman* House	ditto
	Das Gupta, Ananga Mohan ..	Clerk, I G N and Ry Co, Ld	4, Fairlie Place	ditto
	Das Gupta, B C	Assistant Engineer, G E C (India), Ld	Magnet House, Chittaranjan Avenue (South)	ditto
	Das Gupta, Bikeshendra ..	Head Clerk, Stores Department, E B R	3, Kaylaghat Street	ditto
	Das Gupta, Binaya Bhusan, BA ..	Assistant, Accountant-General's Office, Bengal	Treasury Buildings	ditto
	Das Gupta, Binode Lal, BCom ..	Lighting Inspector, Calcutta Corporation	Municipal Office	ditto
	Das Gupta, Bipin Bihari ..	Assistant, Controller's Office, Calcutta University	Senate House	ditto
	Das Gupta, Harendra Nath ..	Assistant, Bengal Secretariat, L S-G Department	Writers' Buildings	ditto
	Das Gupta, Hemendra Kumar ..	Assistant, Martin & Co	12, Mission Row	ditto
	Das Gupta, Hirendra Nath, MSc ..	Assistant Lecturer, University College	92, Upper Circular Road ..	ditto
	Das Gupta, Jatindra Mohan ..	Food Inspector, Calcutta Corporation	Municipal Office	ditto
	Das Gupta, Jnanendra Kumar ..	Head Draftsman, Superintending Engineer's Office, Southern Circle, Public Works Department	3, Government Place, West ..	ditto
	Das Gupta, Jyotirmaya ..	Asstt Bacteriologist, Calcutta Corporation, ...	Municipal Office	ditto
	Das Gupta, Kartik Chandra, BA ..	Superintendent, Registrar's Office, Calcutta University ..	Senate House	ditto
	Das Gupta, Krishna Kanta ..	Clerk, Calcutta Improvement Trust	5, Clive Street	ditto
	Das Gupta, Kshitish Chandra ..	Assistant Estate Superintendent, Port Commissioners' Office ..	Strand Road	ditto
	Das Gupta, Manaranjan, MA ..	Lecturer, City College	102-1, Amherst Street	ditto

Das Gupta, Manindra ..	.. Artist, *Statesman*, Ld	*Statesman* House	ditto
Das Gupta, Manmohan, BL	.. Head Assistant, Income-tax Office	Imperial Secretariat Buildings ..	ditto
Das Gupta, Mati Lal ..	.. Head Assistant, Land Revenue Department, Calcutta Collectorate	3, Charnock Place	ditto
Das Gupta, N B ..	.. Clerk, Burmah-Shell Co of India, Ld	Hongkong House	ditto
Das Gupta, Nirmal Chandra	.. Clerk, Engineering Department, Port Commissioners' Office ..	Strand Road	ditto
Das Gupta, P B, BA ..	.. Sub-Head, C A O's Office, E I R	E I R House	ditto
Das Gupta, Prabodh Nath, BA, GDA ..	Examiner of Accounts, Income-tax Office	3, Government Place, West ..	ditto
Das Gupta, Prafulla Chandra	.. Salesman, Adair, Dutt & Co, Ld	5, Dalhousie Square	ditto
Das Gupta, Ramesh Chandra	.. General Superintendent of Agencies, Unique Assurance Co, Ld ..	10, Canning Street	ditto
Das Gupta, Sasthi Charan	.. Clerk, Harrisons & Crosfield, Ld	6, Church Lane	ditto
Das Gupta, Satish Chandra	.. Assistant Librarian, Bengal Secretariat Library	Writers' Buildings	ditto
Das Gupta, Shishir Chandra, MA	.. Assistant, Accountant-General's Office, Bengal	Treasury Buildings	ditto
Das Gupta, Shrish Chandra	.. Lecturer, Government Commercial Institute	11, Hastings Street	ditto
Das Gupta, Sudhir Chandra, BE, CE	Assistant, Holmes, Wilson & Co, Ld	Norton Buildings	ditto
Das Gupta, Surendra Nath	.. Cashier, Union Insurance Society of Canton, Ld	8, Clive Street	ditto
Das Gupta, Suresh Chandra	.. Assistant to Inspector of Messes, Calcutta University ..	Senate House	ditto
Das Gupta, Suresh Charan	.. Assistant, Office of the I-G of Police	Writers' Buildings	ditto

No.	Names.	Style or calling.	Residence or place of business.	Religion.
	Das Gupta, Umesh Chandra, MA	Examiner of Accounts, Income-tax Office	1, Hare Street	Hindu
	Datta, A B	Assistant Chemist, Imperial Chemical Industries (India), Ld	18, Strand Road	ditto
	Datta, Abinash Chandra	Clerk, Birkmyre Brothers	6, Clive Row	ditto
	Datta, Achyuta Kumar, MA, BL	Professor, Vidyasagar College	39, Sankar Ghose Lane	ditto
	Datta, Ajit Kumar, MA	Lecturer, Ripon College	24, Harrison Road	ditto
	Datta, A K	Assistant Bullion-keeper, Calcutta Mint	47, Strand Road	ditto
	Datta, Amarendra Narayan	Assistant, Martin & Co	12, Mission Row	ditto
	Datta, Ambika Ch	Assistant Cashier, Calcutta Improvement Trust	5, Clive Street	ditto
	Datta, Amulya Charan	Assistant, Accountant-General's Office, Bengal	Treasury Buildings	ditto
	Datta, Anath Krishna	Overseer, City Division, P W D	Writers' Buildings	ditto
	Datta, Anath Nath, BA	Assistant, Accountant-General's Office, Bengal	Treasury Buildings	ditto
	Datta, Anil Krishna	Assistant, Kettlewell, Bullen & Co, Ld	21, Strand Road	ditto
	Datta, Annada Prasad	Assistant, Accountant-General's Office, Bengal	Treasury Buildings	ditto
	Datta, Anukul Chandra	Assistant, James Finlay & Co, Ld	1, Clive Street	ditto
	Datta, Anup Krishna	Assistant, Martin & Co	12, Mission Row	ditto
	Datta, Arabinda	Artist, *Statesman*, Ld	*Statesman* House	ditto

Datta, Baidya Nath ..	..	Clerk, Ralli Brothers, Ld ..	..	16, Hare Street ..	.. ditto
Datta, Bankim Chandra, BA ..		Assistant, Calcutta University ..	..	Senate House ..	.. ditto
Datta, Bhabani Charan ..	..	Clerk, Ralli Brothers, Ld ..	..	16, Hare Street ..	.. ditto
Datta, Bharat Chandra ..	..	Eng Overseer, Calcutta Corporation, D E I ..		79, Cornwallis Street ..	.. ditto
Datta, Bhola Nath ..	..	Clerk, Turner, Morrison & Co, Ld ..	..	6, Lyons Range ..	.. ditto
Datta, Bhupati Charan ..		Assistant Head Clerk, Bengal Waterproof Works, Ld ..		12, Chowringhee ..	.. ditto
Datta, Bhupendra Nath ..	..	Clerk, P D O, Imperial Bank of India ..	..	8, Council House Street ..	.. ditto
Datta, Bijaya Gopal, BSC ..		Accounts Clerk, Ex Engineer's Office, Damodar Division, P W D		Treasury Buildings ..	.. ditto
Datta, Binode Bihari, BA ..		Assistant, Accountant-General's Office, Bengal ..		Treasury Buildings ..	.. ditto
Datta, Binode Bihari ..	..	Assistant, Office of the Superintending Engineer, Central Circle, P W D		Writers' Buildings ..	.. ditto
Datta, Byomkesh ..	..	Salesman, George O Penn & Co ..	..	22, Chowringhee ..	.. ditto
Datta, Chandi Charan, BA ..		Accountant, Calcutta Mineral Supply Co, Ld ..		31, Jackson Lane ..	.. ditto
Datta, Chandra Mohan ..	..	Accountant, Calcutta Insurance, Ld ..	..	86, Clive Street ..	.. ditto
Datta, Charan Das ..	..	Assistant, Bengal Chamber of Commerce ..		2, Clive Street ..	.. ditto
Datta, Charu Chandra ..	..	Assistant, Accountant-General's Office, Bengal ..		Treasury Buildings ..	.. ditto
Datta, Charu Chandra ..	..	Salesman, Symonds & Co ..	..	11, Clive Street ..	.. ditto
Datta, Charu Chandra ..	..	Salesman, Blackwood, Blackwood & Co ..	..	4, Lyons Range ..	.. ditto

No.	Names.	Style or calling.	Residence or place of business.	Religion.
	Datta, Chuni Lal, BSc ..	.. Demonstrator, Vidyasagar College	.. 39, Sanker Ghose Lane	Hindu
	Datta, Debendra Nath ..	.. Assistant, James Finlay & Co, Ld	.. 1, Clive Street	ditto
	Datta, Debendra Nath ..	.. Clerk, Collection Department, Calcutta Corporation ..	.. Municipal Office	ditto
	Datta, Debendra Nath	.. Accounts Clerk, Imperial Chemical Industries (India), Ld	.. 18, Strand Road	ditto
	Datta, Debi Prasad, MA ..	.. Assistant, Controller's Office, Calcutta University ..	.. Senate House	ditto
	Datta, Dev ..	.. Accountant, C A O's Office, E I R ..	.. E I R House	ditto
	Datta, Dharmadas ..	.. Clerk, P D O, Imperial Bank of India	.. 8, Council House Street	ditto
	Datta, Dhirendra Chandra	.. Assistant, Accountant-General's Office, Bengal ..	.. Treasury Buildings	ditto
	Datta, Dhirendra Kumar	.. Assistant, Accountant-General's Office, Bengal ..	.. Treasury Buildings	ditto
	Datta, Dhirendra Lal, BA	.. Assistant Cashier, Accountant-General's Office, Bengal	.. Treasury Buildings	ditto
	Datta, Dhirendra Nath ..	.. Assistant, Office of the Director of Industries, Bengal	.. 40-1A, Free School Street ..	ditto
	Datta, Dhirendra Nath	.. Assistant, European Association	.. 17, Stephen Court, Park Street ..	ditto
	Datta, Dhirendra Nath ..	.. Clerk, Depositor's Department, Imperial Bank of India	.. Strand Road	ditto
	Datta, Dhirendra Nath ..	.. Overseer, Calcutta Improvement Trust	.. 5, Clive Street	ditto
	Datta, Dhirendra Nath ..	.. Clerk, Place, Siddons & Gough	.. 6, Lyons Range	ditto
	Datta, Fakir Chand ..	.. Accountant, License Department, Calcutta Corporation	.. Municipal Office	ditto
	Datta, Girija Bhusan ..	.. Clerk, Liverpool & London & Globe Insurance Co, Ld	.. 26, Dalhousie Square	ditto
	Datta, Gopal Chandra ..	.. Invoice Clerk, Geo Henderson & Co, Ld	.. 101-1, Clive Street	ditto
	Datta, Gopendranath ..	.. Assistant, Calcutta Improvement Trust	.. 5, Clive Street	ditto
	Datta, Haridas ..	.. Clerk, Shaw, Wallace & Co	.. 4, Bankshall Street	ditto
	Datta, Hariprasad ..	.. Clerk, Ralli Brothers, Ld	.. 16, Hare Street	ditto

Datta, Haritosh ..	.. Accountant, Suburban Division, P W D ..	.. Writers' Buildings ..	.. ditto
Datta, H C ..	.. Assistant, Guest, Keen, Williams, Ld ..	.. 7, Council House Street	.. ditto
Datta, H K ..	.. Clerk, P & O Banking Corporation, Ld ..	.. 1, Fairlie Place ..	.. ditto
Datta, Indu Bhusan ..	.. Offg Audit Inspector, Port Commissioners' Office	.. Strand Road ..	.. ditto
Datta, Jatindra Nath, BA ..	Assistant, Calcutta University	.. Senate House ..	.. ditto
Datta, Jatindra Nath, BA ..	Offg Accountant, Accountant-General's Office, Bengal	.. Treasury Buildings ..	.. ditto
Datta, Jatindra Nath ..	.. Assistant Superintendent of Textile, Office of the Director of Industries, Bengal	40-1A, Free School Street	.. ditto
Datta, Jaykrishna, BSc ..	.. Sub-Head, Accounts Deptt, E B R	.. 3, Kaylaghat Street ..	.. ditto
Datta, Jitendra Lal ..	.. Clerk, C O P S Office, E I R	.. E I R House ..	.. ditto
Datta, Jogesh Chandra, MA ..	Assistant, A-G's Office, Bengal	.. Treasury Buildings ..	.. ditto
Datta, Jogini Kumar ..	.. Clerk, W W Department, Calcutta Corporation ..	.. Municipal Office ..	.. ditto
Datta, Kali Krishna ..	.. Clerk, Kettlewell, Bullen & Co, Ld	.. 21, Strand Road ..	.. ditto
Datta, Kamala Prasad ..	.. Assistant, McLeod & Co	.. 28, Dalhousie Square ..	.. ditto
Datta, Kartic Chandra, MSc ..	Senior Electrician, Standard Telephones & Cables, Ld	.. C2, Clive Buildings ..	.. ditto
Datta, Karuna Charan ..	.. Clerk, National Bank of India, Ld	.. 104, Clive Street ..	.. ditto
Datta, Kedarnath ..	.. Clerk, Ralli Brothers, Ld	.. 16, Hare Street ..	.. ditto
Datta, Khagendra Nath ..	.. Stenographer, C A O's Office, E I R ..	.. E I R House ..	.. ditto
Datta, Kiran Chandra ..	.. Assistant, Balmer, Lawrie & Co, Ld	.. 103, Clive Street ..	.. ditto
Datta, Kripanath ..	.. Book-Keeper, Imperial Tobacco Co of India, Ld ..	.. 37, Chowringhee ..	.. ditto

No.	Names.	Style or calling	Residence or place of business.	Religion.
	Datta, Krishna Ch ..	.. Audit Clerk, Calcutta Improvement Trust ..	.. 5, Clive Street	Hindu
	Datta, Kumudini Kanta ..	.. Assistant, Bengal Secretariat, L S-G Department ..	.. Writers' Buildings	ditto
	Datta, Lal Bihari ..	.. Clerk, Depositor's Deptt, Imperial Bank of India ..	.. Strand Road	ditto
	Datta, Mahendra Nath ..	.. Head Draftsman, Engineer's Office, E B R ..	.. 3, Kaylaghat Street	ditto
	Datta, Manasa Charan ..	.. Assistant, Accounts Department, Calcutta Corporation ..	Municipal Office	ditto
	Datta, Mangobinda ..	.. Clerk, Agency Deptt, E B R	.. 3, Kaylaghat Street	ditto
	Datta, Maniklal, BA ..	.. Senior Clerk, Special Officer's Deptt, Calcutta Corporation ..	Municipal Office	ditto
	Datta, Manindra Nath, MSC	.. Assistant, Zoological Survey of India	.. Indian Museum	ditto
	Datta, Manmatha Nath, BA	.. Clerk, Army Factory Accounts	.. 6, Esplanade, East	ditto
	Datta, Manmatha Nath	.. Acting Foreman, Government of India Press ..	.. 8, Hastings Street	ditto
	Datta, Mathura Nath ..	.. Clerk, Gillanders, Arbuthnot & Co	.. 8, Clive Street	ditto
	Datta, Nabani Mohan ..	.. Clerk, Union Insurance Society of Canton, Ld ..	.. 8, Clive Street	ditto
	Datta, Nagendra Nath	.. Assistant, Senda & Co (India), Ld ..	.. 135, Canning Street	ditto
	Datta, Nalin Krishna ..	.. Assistant, Accountant-General's Office, Bengal ..	.. Treasury Buildings	ditto
	Datta, Nanak Chand ..	.. Clerk, Office of the Controller of Purchase, Indian Stores Department	6, Esplanade, East	ditto

Datta, Nanda Lal ..	.. Assistant, Imperial Library	.. 6, Esplanade, East ..	..	ditto
Datta, Narayan Chandra, BA	.. Assessor of Income-tax	.. 6, Esplanade, East ..	..	ditto
Datta, Narendra Chandra	.. Assistant, McLeod & Co	.. 28, Dalhousie Square ..	..	ditto
Datta, Narendra Kumar	.. Cashier, North British and Mercantile Insurance Co Ld	.. 101-1, Clive Street ..	..	ditto
Datta, Narendra Nath ..	.. Assistant Head Clerk, Imperial Tobacco Co of India, Ld	.. 37, Chowringhee ..	..	ditto
Datta, Naresh Chandra ..	.. Clerk, I G N & Ry Co, Ld	.. 4, Fairlie Place ..	..	ditto
Datta, Naresh Nath ..	.. Assistant, Office of the Director of Industries, Bengal	.. 40-1A, Free School Street	..	ditto
Datta, N C ..	.. Assistant, Mackinnon, Mackenzie & Co	.. 8, Strand Road ..	..	ditto
Datta, Nirmal Chandra	.. Stenographer, Balmer, Lawrie & Co, Ld ..	.. 103, Clive Street ..	..	ditto
Datta, Nitai Chand ..	.. Clerk, National Bank of India, Ld	.. 104, Clive Street ..	..	ditto
Datta, Nitai Charan ..	.. Clerk, Turner, Morrison & Co, Ld	.. 6, Lyons Range ..	..	ditto
Datta, Nripendra Nath ..	.. Cashier, Thos Cook & Son, Ld	.. 4, Dalhousie Square ..	..	ditto
Datta, Nripendra Nath	.. Accounts Clerk, E B R	.. 3, Kaylaghat Street ..	..	ditto
Datta, Nripendra Nath, MA	.. Assistant, Office of the Director of Industries, Bengal	.. 40-1A, Free School Street	..	ditto
Datta, Nritya Gopal ..	.. Head Draftsman, Superintending Engineer's Office, Central Circle P W D	Writers' Buildings ...	..	ditto
Datta, Pannalal ..	.. Assistant, Office of the Controller of Currency ..	.. Treasury Buildings ..	..	ditto
Datta, Prabhas Chandra	.. Clerk, Ralli Brothers, Ld	.. 16, Hare Street ..	..	ditto
Datta, Prabhas Chandra, BA	.. Assistant, Bengal Secretariat, Finance Department	.. Writers' Buildings ...	...	ditto

No.	Names.	Style or calling.	Residence or place of business.	Religion
	Datta, Prafulla Kumar ..	.. Assistant, Accountant General's Office, Bengal ..	.. Treasury Buildings ..	.. Hindu
	Datta, Pramode Kumar, BA	.. Head Clerk, Education Department, Calcutta Corporation ..	Municipal Office ..	.. ditto
	Datta, Pulin Bihari, BSC	.. Divisional Accountant, Accountant-General's Office, Bengal ..	Treasury Buildings ..	.. ditto
	Datta, Pulin Bihari ..	.. Accountant, American Foreign Insurance Association ..	15, Clive Row ..	.. ditto
	Datta, Purna Chandra ..	.. Assistant, Mackinnon, Mackenzie & Co	.. 16, Strand Road ..	.. ditto
	Datta, Rabindra Chandra, BSC	.. Clerk, C A's Office, E I R	.. E I R House ..	.. ditto
	Datta, Rajendra Nath	.. Assistant, Office of the Geological Survey of India ..	.. 27, Chowringhee ..	.. ditto
	Datta, Rakhal Chandra ..	.. Assistant, Subarnabanik Samachar Office ..	.. 100-5-1, Surendra Nath Banerjee Street	ditto
	Datta, Ramanath ..	.. Assistant, Senda & Co (India), Ld	.. 135, Canning Street ..	.. ditto
	Datta, Ramesh Chandra, BA	.. Clerk, Agency Department, E B R	.. 3, Kaylaghat Street ..	.. ditto
	Datta, Rash Bihari ..	.. Assistant, Central Stationery Office	.. 3, Church Lane ..	.. ditto
	Datta, Santos Kumar ..	.. Confidential Assistant, Presidency Commissioner's Office ..	3, Charnock Place ..	.. ditto
	Datta, Sarit Nath ..	.. Assistant, Accounts Department, Calcutta Corporation ..	Municipal Office ..	.. ditto
	Datta, Satish Chandra ..	.. Assistant, Mackinnon, Mackenzie & Co	.. 16, Strand Road ..	.. ditto
	Datta, Satish Chandra ..	.. Head Assistant (Policy), Unique Assurance Co, Ld ..	10, Canning Street ..	.. ditto
	Datta, Satish Chandra, III, BA	.. Assistant, Accountant-General's Office, Bengal ..	.. Treasury Buildings ..	.. ditto
	Datta, Satish Chandra ..	.. Head Assistant, Stamp Department, Calcutta Collectorate ..	3, Charnock Place ..	.. ditto
	Datta, Satish Chandra, II, BA,	.. Assistant, Accountant-General's Office, Bengal ..	.. Treasury Buildings ..	.. ditto

Datta, Satish Chandra ..	.. Accountant, Blackwood, Blackwood & Co ..	.. 4, Lyons Range ..	..	ditto
Datta, Satya Charan, BA	.. Inspector, License Department, Calcutta Corporation	.. Municipal Office ..	..	ditto
Datta, S C ..	.. Assistant, P & O Banking Corporation, Ld ..	.. 1, Fairlie Place ..	..	ditto
Datta, Shachindra Nath	.. Assistant, Lovelock & Lewes	.. 4, Lyons Range ..	..	ditto
Datta, Shailesh Chandra (I)	.. Assistant, Accountant-General's Office, Bengal ..	.. Treasury Buildings ..	..	ditto
Datta, Shankar Nath ..	.. Assistant, Bengal Secretariat Record Room ..	.. Writers' Buildings ..	..	ditto
Datta, Sharat Chandra ..	.. Clerk, Ralli Brothers, Ld	.. 16, Hare Street ..	..	ditto
Datta, Sharat Chandra, BA	.. Assistant, Office of the Director of Public Instruction, Bengal ..	Writers' Buildings ..	..	ditto
Datta, Sharat Chandra, BSc	.. Assistant Teacher, Collins Institute	.. 140, Dharamtala Street ..	..	ditto
Datta, Shashi Bhusan ..	.. Assistant, Mackinnon, Mackenzie & Co	.. 16, Strand Road ..	..	ditto
Datta, Shashi Bhusan, BA	.. Clerk, Agent's Office, E I R	.. E I R House ..	..	ditto
Datta, Shibprasanna ..	.. Engineer, F & C Osler, Ld	.. 12, Old Court House Street	..	ditto
Datta, Shivapada ..	.. Clerk, Place, Siddons & Gough	.. 6, Lyons Range ..	..	ditto
Datta, Shripati ..	.. Assistant, Mackinnon, Mackenzie & Co	.. 16, Strand Road ..	..	ditto
Datta, Shripati Charan ..	.. Head Clerk, Bengal Smoke Nuisances Commission ..	.. 3, Charnock Place ..	..	ditto
Datta, Shrish Chandra ..	.. Assistant, Office of the Controller of Currency ..	.. Treasury Buildings ..	..	ditto
Datta, Shyamlal ..	.. Assistant, Price, Waterhouse, Peat & Co	.. B-4, Clive Buildings ..	..	ditto
Datta, Siddheswar ..	.. Assistant, Bengal Secretariat, Police Department ..	.. Writers' Buildings ..	..	ditto
Datta, S N ..	.. Accountant, Robert Ingham Clark & Co, Ld ..	.. 2, Clive Row ..	..	ditto

No.	Names.	Style or calling.	Residence or place of business.	Religion.
	Datta, Sudin Prakash, BA	Assistant, Accountant-General's Office, Bengal	Treasury Buildings	Hindu
	Datta, Sukomal, BA	Sub-Head, C A's Office, E I R	E I R House	ditto
	Datta, Surendra Chandra, MA	Assistant, Commercial Intelligence Department, India	1, Council House Street	ditto
	Datta, Surendra Nath	Typist, Central Typing Section, E I R	E I R House.	ditto
	Datta, Tarak Nath, BA	Offg. Accountant, Accountant-General's Office, Bengal	Treasury Buildings	ditto
	Datta, Tarak Nath	Stenographer, Bengal Secretariat, Finance Deartment	Writers' Buildings	ditto
	Datta, Tinkari	Assistant, Balmer, Lawrie & Co, Ld	103, Clive Street	ditto
	Datta, Umapada	Clerk, C O P S Office, E I R	E I R House	ditto
	Datta Chaudhuri, Makhan Lal	Assistant, Eastern Bank, Ld	9, Clive Street	ditto
	Datta Chaudhuri, Samatul Chandra, BL	Examiner of Accounts, Income-tax Office	3, Government Place, West	ditto
	Datta Gupta, Kumudini Kanta	Clerk, Ralli Brothers, Ld	16, Hare Street	ditto
	Datta Gupta, Satish Chandra, BA	Assistant, Office of the Director of Public Instruction, Bengal	Writers' Buildings	ditto
	Datta Ray, Abani Kishore, BSC, BT	Assistant Master, Hare School	87, College Street	ditto
	Datta Ray, Dhirendra Nath	Assistant, Accountant-General's Office, Bengal	Treasury Buildings	ditto
	Datta Ray, Jogendra Nath, MA	Assistant, Accounts Department, Calcutta Corporation	Municipal Office	ditto
	Datta Ray, S K	Accountant, C A O's Office, E I R	E I R House	ditto
	Daw, Bibhuti Bhusan	Salesman, Greaves, Cotton & Co, Ld	60, Dharamtala Street	ditto

Daw, Subodh Kumar	Upper Subordinate, Ex Engr's Office, Western Elecl Divn	Writers' Buildings	..	ditto
Dayal, Bisseshwar	Section-holder, P S Office, E I R	E I R House	..	ditto
De, Abani Mohan	Head Clerk, Dredger Division	3, Charnock Place	..	ditto
De, Akshaya Kumar	Clerk, Shaw, Wallace & Co	4, Bankshall Street	..	ditto
De, Amarendra Nath	Clerk, Turner, Morrison & Co, Ld	6, Lyons Range	..	ditto
De, Amulya Charan	Supvg Surveyor, Calcutta Improvement Trust	5, Clive Street	..	ditto
De, Amulyadhan, BA, GDA	Examiner of Accounts, Income-tax Office	6, Esplanade, East	..	ditto
De, Amulyadhan	Clerk, Lloyds Bank, Ld	101-1, Clive Street	..	ditto
De, Ananta K	Steno-typist, Secretary's Department, Port Commissioners' Office	Strand Road	..	ditto
De, Ashutos	Assistant, Indian Association for the Cultivation of Science	210, Bowbazar Street	..	ditto
De, Atul Krishna	Assistant, Martin & Co	12, Mission Row	..	ditto
De, Atul Krishna	Clerk, Ralli Brothers, Ld	16, Hare Street	..	ditto
De, Baidyanath, BA	Assistant, Accountant-General's Office, Bengal	Treasury Buildings	..	ditto
De, Balai Chand	Assistant, Andrew Yule & Co, Ld	8, Clive Row	..	ditto
De, Balai Chand	Inspector, License Department, Calcutta Corporation	Municipal Office	..	ditto
De, Beni Madhab	Claims Inspector, E B R	3, Kaylaghat Street	..	ditto
De, Bhagabati Kumar	Assistant, Grahams Trading Co (India), Ld	6, Lyons Range	..	ditto
De, Bhutnath	Assistant, Kettlewell Bullen & Co, Ld	21, Strand Road	..	ditto

No.	Names.	Style or calling.	Residence or place of business.	Religion.
	De, Binayeshwar	Assistant, Office of the Director of Public Health, Bengal ..	Writers' Buildings ..	Hindu
	De, Brajendra Nath	Examiner of Stores, Indian Stores Department (Inspection) ..	6, Esplanade, East ..	ditto
	De, Chandra Shekhar	Assistant, Burn & Co, Ld	12, Misson Row	ditto
	De, Debiprasad	Ledger-keeper, Imperial Tobacco Co of India, Ld	37, Chowringhee	ditto
	De Dhirendra Nath, BA ..	Assistant, Accountant-General's Office, Bengal	Treasury Buildings	ditto
	De, Dhirendra Nath	Assistant, Babcock & Wilcox, Ld	4, Bankshall Street	ditto
	De, Dulal Chand, BSC	Assistant Analyst, Bengal Public Health Laboratory ..	Chittaranjan Avenue ..	ditto
	De, Gajapati Nath	Clerk, I G N & Ry Co, Ld	4, Fairlie Place	ditto
	De, Gajendra Nath	Assistant, Balmer, Lawrie & Co, Ld	103, Clive Street	ditto
	De, Gokul Das, MA	Lecturer, University College	Senate House	ditto
	De, Gour Mohan	Chemist and Technologist, Dey & Co	41/B, Clive Street	ditto
	De, Guha Ram	Sub-Accountant, Grindlay & Co, Ld	6, Church Lane	ditto
	De, Haran Chandra, BSC ..	Demonstrator, Vidyasagar College	39, Shankar Ghose Lane ..	ditto
	De, Hari Charan	Clerk, Office of the Controller of Purchase, Indian Stores Deptt..	6, Esplanade, East	ditto
	De, Harish Chandra	Clerk, Collection Deptt, Calcutta Corporation	Municipal Office	ditto
	De, H C	Assistant, P & O Banking Corporation, Ld	1, Fairlie Place	ditto
	De, H K	Clerk, C E S C, Ld	Victoria House	ditto

De, Hiralal	.. ..	Overseer, City Division, P W D, Bengal	.. ..	Writers' Buildings .. .. ditto
De, Jatindra Nath	.. ..	Assistant, Accounts Department, Calcutta Corporation	..	Municipal Office .. .. ditto
De, Jatindra Nath	.. ..	Assistant, Calcutta Improvement Trust	..	5, Clive Street .. .. ditto
De, Jitendra Krishna	.. ..	Assistant, Accountant-General's Office, Bengal	.. ..	Treasury Buildings .. .. ditto
De, Jitendra Nath	.. ..	Assistant, Controller's Office, Calcutta University	.. ..	Senate House .. .. ditto
De, Jitendra Nath	.. ..	Head Draftsman, C E's Office, E I R	..	E I R House .. .. ditto
De, J N	.. ..	Shipping Clerk, Government Shipping Office	.. ..	15-1, Strand Road .. .. ditto
De, Jogendra Kumar	.. ..	Assistant, Lionel Edwards, Ld	..	D-1, Clive Buildings .. .. ditto
De, Jyotish Chandra	.. ..	Assistant, Accountant-General's Office, Bengal	.. ..	Treasury Buildings .. .. ditto
De, Jyotish Chandra	.. ..	Head Assistant Cashier, Calcutta Improvement Trust	..	5, Clive Street .. .. ditto
De, Kali Charan	.. ..	C O Inspector, Traffic Department, E B R	.. ..	3, Kaylaghat Street .. .. ditto
De, Khagendra Nath	.. ..	Clerk, P S Office, E I R	..	E I R House .. .. ditto
De, Krishna Das	.. ..	Assistant, Macneill & Co ..	..	2, Fairlie Place .. .. ditto
De, Kshetrapada	.. ..	Assistant, Bengal Secretariat, Appointment Department	..	Writers' Buildings .. .. ditto
De, Mahima Charan	.. ..	Assistant, Accountant-General's Office, Bengal	.. ..	Treasury Buildings .. .. ditto
De, Manik Chand	.. ..	Clerk, Shaw, Wallace & Co	..	4, Bankshall Street .. .. ditto
De, Manik Lal	.. ..	Assistant, James Finlay & Co, Ld	..	1, Clive Street .. .. ditto
De, Manindra Chandra	.. ..	Assistant, Port Office, Calcutta	..	15-1 Strand Road .. .. ditto

No.	Names.	Style or calling.	Residence or place of business.	Religion.
	De, Manindra Nath ..	Clerk, C O P S Office, E I R	.. E I R House	Hindu
	De, Manmatha Nath ..	.. Cashier, Begg Dunlop & Co, Ld	.. 2, Hare Street	ditto
	De, Matilal ..	.. Accountant, American Foreign Insurance Association	.. 15, Clive Row	ditto
	De, Nagendra Nath ..	.. Cashier, Bengal Iron Co, Ld	.. 4, Lyons Range	ditto
	De, Nanda Lal ..	.. Assistant, Dey & Co	.. 41-B, Clive Street	ditto
	De, Nani Gopal .	.. Head Assistant, Pigott Chapman & Co	.. 6, Lyons Range	ditto
	De, Nani Lal ..	.. Clerk, R Sim & Co	.. 2, Clive Row	ditto
	De, Narayan Chandra ..	.. Cashier, Mackenzie, Lyall & Co	.. 5, Mission Row	ditto
	De, Narayan Das ..	.. Cashier, Royal Insurance Co, Ld	.. 26 & 27, Dalhousie Square ..	ditto
	De, Nilmani ..	.. Accountant, P H D, Bengal	.. 3, Charnock Place	ditto
	De, Nimai Chand ..	.. Assistant, Grahams Trading Co (India), Ld ..	.. 6, Lyons Range	ditto
	De, Nirendra Narayan ..	.. Clerk, Shaw, Wallace & Co	.. 4, Bankshall Street	ditto
	De, Nirmal Chandra, MSC	.. Demonstrator, Scottish Church College	.. 4, Cornwallis Square	ditto
	De, Nirmal Chandra, BSC	.. Assistant, Accountant-General's Office, Bengal ..	.. Treasury Buildings	ditto
	De, Nirmal Prakash, MA, BL	.. Assistant, Calcutta University	.. Senate House	ditto
	De, Nitai Chand ..	.. Assistant Book-keeper, Imperial Tobacco Co of India, Ld	.. 37, Chowringhee ..	ditto
	De, N M ..	.. Assistant, Mackinnon, Mackenzie & Co	.. 8, Strand Road	ditto
	De Nritya Gopal ..	.. Clerk, Ralli Brothers, Ld	.. 16, Hare Street	ditto

De, Phanindra Nath, BA	Assistant Reader, Bengal Library	Writers' Buildings	ditto		
De, Prabodh Chandra	Overseer, Western Electrical Division	Writers' Buildings	ditto		
De, Prafulla Kumar	Assistant, Dey & Co	41-B, Clive Street	ditto		
De, Pramatha Nath	Cashier, A Milton & Co, Ld	156, Dharamtala Street	ditto		
De, Pramatha Nath	Sec Head Clerk, C E's Office, E I R	E I R House	ditto		
De, Pranabesh Kumar	Assistant, Brooke Bond (India), Ld	2, Metcalfe Street	ditto		
De, Pran Gobinda	Clerk, Ralli Brothers, Ld	16, Hare Street	ditto		
De, Provash Chandra, MA	Lecturer, Ripon College	24, Harrison Road	ditto		
De, Purna Chandra	Cashier, Planters' Stores & Agency Co, Ld	11, Clive Street	ditto		
De, Raghunath	Clerk, Agent's Office, E B R	3, Kaylaghat Street	ditto		
De, Rajendra Nath	Assistant, Eastern Bank, Ld	9, Clive Street	ditto		
De, Ramanath	Head Estimator, Calcutta Improvement Trust	5, Clive Street	ditto		
De, Ranendra Krishna	Clerk, Alliance Assurance Co, Ld	2, Hare Street	ditto		
De, Rasik Lal	Assistant, Andrew Yule & Co, Ld	8, Clive Row	ditto		
De, R K	5th Passing Officer, Imperial Bank of India	8, Council House Street	ditto		
De, Santosh Kumar, BSc	Analyst, Calcutta Corporation	Municipal Office	ditto		
De, Satish Chandra	Clerk, C E S C, Ld	Victoria House	ditto		
De, S D	Accountant, E B R	3, Kaylaghat Street	ditto		

No.	Names.	Style or calling.	Residence or place of business.	Religion.
	De, Shailendra Krishna ..	.. Assistant, Holmes, Wilson & Co, Ld	.. Norton Buildings	Hindu
	De, Shailendra Kumar ..	.. Officiating Accountant, Accountant-General's Office, Bengal	.. Treasury Buildings	ditto
	De, Shailendra Nath ..	.. Assistant, Accountant-General's Office, Bengal ..	.. Treasury Buildings	ditto
	De, Shambhu Nath ..	.. Assistant, Bengal Chemical & Pharmaceutical Works, Ld	.. 13, Chittaranjan Avenue, South ..	ditto
	De, Sharat Chandra ..	.. Assistant, Surveyor-General's Office	.. 13, Wood Street	ditto
	De, Sharat Kumar, BA	.. Assistant, Surveyor-General's Office	.. 13, Wood Street	ditto
	De, Smritendra Nath, BA	.. Assistant, Accountant-General's Office, Bengal ..	.. Treasury Buildings	ditto
	De, Subal Chandra ..	.. Assistant, Presidency Commissioner's Office ..	.. 3, Charnock Place	ditto
	De, Subodh Chandra ..	.. Cashier, Office of the Controller of Currency ..	.. Treasury Buildings	ditto
	De, Sudhir Chandra ..	.. Assistant, Martin & Co	.. 12, Mission Row	ditto
	De, Surath Kumar, BA	.. Assistant, Accountant-General's Office, Bengal ..	.. Treasury Buildings	ditto
	De, Surendra Nath ..	.. Assistant, Kettlewell, Bullen & Co, Ld	.. 21, Strand Road	ditto
	De, T N	.. Assistant, Pigott Chapman & Co	.. 6, Lyons Range	ditto
	Deb, Arunkumar ..	.. Assistant, Commercial Intelligence Department ..	.. 1, Council House Street ..	ditto
	Deb, Bindhu Madhab, BSc	.. Articled Clerk, U M Chaudhury & Co	.. 12-1, Old Post Office Street ..	ditto
	Deb, Girija Bhusan ..	.. Clerk, Accounts Department, Imperial Bank of India	.. Strand Road	ditto
	Deb, Narendra Kumar ..	.. Surveyor, Calcutta Improvement Trust	.. 5, Clive Street	ditto

Deb, Ramnarayan, MSc ..	.. Lecturer, Ripon College	..	24, Harrison Road ..	.. ditto
Deb, Tarak Nath ..	.. Assistant, Bengal Secretariat, Irrigation Department ..		Writers' Buildings ..	.. ditto
Deb, Upendra Nath ..	.. Clerk, Office of the Controller of Purchase, Indian Stores Department		6, Esplanade, East ..	.. ditto
Debnath, Chintaharan ..	.. Stenographer, Stewart & Co	..	8, Clive Street ..	.. ditto
Deekshither, N Nataraja	.. Accountant, Bell's Asbestos & Engineering (India), Ld ..		10, Clive Street ..	.. ditto
Derasatullah ..	.. Assistant, Bengal Secretariat, Revenue Department ..	..	Writers' Buildings ..	.. Mahomedan
Desai, D C ..	.. Assistant Bridge Engineer, E I R	..	E I R House ..	.. Christian
Desai, Magan Lal, G ..	.. Salesman, Godrej & Boyce Mfg Co, Ld	..	102, Clive Street ..	.. Hindu
Despande, S B ..	.. Assistant Electrical Engineer, E I R	..	E I R House ..	.. ditto
Dhar, B S ..	.. Clerk, Medical Department, E B R ..	..	3, Kaylaghat Street ..	.. ditto
Dhar, D C ..	.. Assistant, Mackinnon, Mackenzie & Co	..	8, Strand Road ..	.. ditto
Dhar, H D ..	.. Clerk, Burmah-Shell Co of India, Ld	..	Hongkong House ..	.. ditto
Dhar, Hrishikesh ..	.. Clerk, Depositor's Department, Imperial Bank of India ..		Strand Road ..	.. ditto
Dhar, Lakshan Chandra ..	.. Assistant, James, Finlay & Co, Ld	..	1, Clive Street ..	.. ditto
Dhar, Narendra Nath ..	.. Assistant, Accountant-General's Office, Bengal ..	..	Treasury Buildings ..	.. ditto
Dhar, Ram Chandra ..	.. Cashier, Jardine, Skinner & Co	..	4, Clive Row ..	.. ditto
Dhole, Harilal ..	.. Clerk, Jardine, Skinner & Co	..	4, Clive Row ..	.. ditto
Dubash, M F ..	.. Assistant, Burn & Co, Ld	..	12, Mission Row ..	.. Zoroastrian

No.	Names.	Style or calling.	Residence or place of business.	Religion.
	Dustoor, Byram Sorabji	Assistant, Ralli Brothers, Ld	16, Hare Street	Zoroastrian
	E			
	Engineer, H D	Accountant, Grahams Trading Co (India), Ld	6, Lyons Range	Zoroastrian
	F			
	Faseeh, Abul Huffaz Md	Lecturer, Calcutta Madrassah	19, Wellesley Square	Mahomedan
	Framji, Rustomji	Salesman, Greaves Cotton & Co, Ld	60, Dharamtala Street	Zoroastrian
	Furdonji, Merwanjee	Sr Assistant, Testing Department, C E S C, Ld	Victoria House	ditto
	G			
	Gaffur, Maulvi Abdul	Clerk, Agent's Office, E B R	3, Kaylaghat Street	Mahomedan
	Ganeriwalla, Ramkumar	Assistant, Bagla & Co	7, Lyons Range	Hindu
	Ganguli, A C	Clerk, Burmah-Shell Co of India, Ld	Hongkong House	ditto
	Ganguli, A N	Assistant, Imperial Record Department	3, Government Place, West	ditto
	Ganguli, Ahibhusan	Assistant, Ludlow Jute Co, Ld	7, Royal Exchange Place	ditto
	Ganguli, Anath Bandhu	Assistant, Bengal Secretariat, Appointment Department	Writers' Buildings	ditto
	Ganguli, Anil Kumar, BSC	Head Draftsman, Spl Officer's Deptt, Calcutta Corporation	Municipal Office	ditto
	Ganguli, Ashutos	Chief Clerk, C E S C, Ld	Victoria House	ditto

Ganguli, Ashutos ..	.. Book-keeper, Jardine, Skinner & Co	.. 4, Clive Row ..	..	ditto
Gangilu, Ashutos ..	.. Assistant, Central Stationery Office	.. 3, Church Lane ..	..	ditto
Ganguli, Ashutos, BA ..	.. Head Clerk, Executive Engineer's Office, Damodar Division	.. Treasury Buildings ..	..	ditto
Ganguli, Ashutos ..	.. Assistant, James, Finlay & Co, Ld	.. 1, Clive Street ..	..	ditto
Ganguli, Atul Krishna ..	.. Assistant, Macneill & Co	.. 2, Fairlie Place ..	..	ditto
Ganguli, B, BSC ..	.. Partner, Ganguli & Chatterjea	.. 30, Clive Street ..	..	ditto
Ganguli, Bhabatos, MA ..	.. Assistant, Bengali Translator's Office	.. Writers' Buildings ..	..	ditto
Ganguli, Bhudeb ..	.. Clerk, Accounts Department, Imperial Bank of India	.. Strand Road ..	..	ditto
Ganguli, Bhupendra Nath	.. Clerk, C M E's Office, E I R	.. E I R House ..	.	ditto
Ganguli, Bihari Lal ..	.. Clerk, Turner, Morrison & Co, Ld	.. 6, Lyons Range ..	..	ditto
Ganguli, Bijay Krishna ..	.. Clerk, National Bank of India, Ld	.. 104, Clive Street ..	..	ditto
Ganguli, Bijay Krishna ..	.. Ledger-keeper, National City Bank of New York ..	.. 4, Clive Street ..	..	ditto
Ganguli, Bijay Krishna ..	.. Clerk, C E S C, Ld	.. Victoria House ..	..	ditto
Ganguli, Bisseshwar ..	.. Clerk, License Department, Calcutta Corporation ..	.. Municipal Office ..	..	ditto
Ganguli, D ..	.. Audit Inspector, Port Commissioners' Office ..	.. Strand Road ..	..	ditto
Ganguli, D C ..	.. Commercial Assistant, Reuters, Ld	.. 26-7, Dalhousie Square ..	..	ditto
Ganguli, Haradhan ..	.. Assistant, Mackinnon, Mackenzie & Co	.. 16, Strand Road ..	..	ditto
Ganguli, Harendra Lal ..	.. Assistant, Alliance Assurance Co, Ld	.. 2, Hare Street	..	ditto

No.	Names.	Style or calling.	Residence or place of business.	Religion.
	Ganguli, Haridas ..	.. Lighting Supervisor, Calcutta Corporation ..	.. Municipal Office ..	.. Hindu
	Ganguli, Haridas, MSc ..	.. Probationer, Chemical Examiner's Department, Bengal	.. Medical College ..	.. ditto
	Ganguli, Hari Prasanna	.. Stenographer, Harrisons and Crosfield, Ld ..	.. 6, Church Lane ..	.. ditto
	Ganguli, Harish Chandra	.. Clerk, Turner, Morrison & Co, Ld	.. 6, Lyons Range ..	.. ditto
	Ganguli, Heramba Chandra, BA	.. Assistant, Accountant-General's Office, Bengal ..	.. Treasury Buildings ..	.. ditto
	Ganguli, Hirendra Kumar	.. Clerk, C C M's Office, E I R	.. E I R House ..	.. ditto
	Ganguli, Indu Bhusan ..	.. Accountant, Plummers Bros & Co	.. 5 & 6, Fancy Lane ..	.. ditto
	Ganguli, Janaki Kanta ..	.. Assistant, Lovelock & Lewes	.. 4, Lyons Range ..	.. ditto
	Ganguli, Jibanbhusan ..	.. Clerk, National Bank of India, Ld	.. 104, Clive Street ..	.. ditto
	Ganguli, Kantish Chandra	.. Clerk, Office of the Controller of Army Factory Accounts	.. 6, Esplanade, East ..	.. ditto
	Ganguli, Kedareshwar ..	.. Clerk, W T Henley's Telegraph Works Co, Ld ..	.. Old Court House Corner ..	.. ditto
	Ganguli, K N ..	.. Stenographer, Associated Electrical Industries (India), Ld	.. A-3, Clive Buildings ..	.. ditto
	Ganguli, Krishnadhan ..	.. Assistant, Price, Waterhouse, Peat & Co	.. B-4, Clive Buildings ..	.. ditto
	Ganguli, Kshirode Mohan, MA	.. Clerk, Army Factory Accounts	.. 6, Esplanade, East ..	.. ditto
	Ganguli, Lalit Mohan ..	.. Assistant, Accountant-General's Office, Bengal ..	.. Treasury Buildings ..	.. ditto
	Ganguli, Lalit Mohan	.. Assistant (2nd grade), Imperial Bank of India ..	.. Strand Road ..	.. ditto
	Ganguli, Manindra Nath ..	.. Surveyor and Estimator, Calcutta Corporation ..	.. Municipal Office ..	.. ditto

Ganguli, Nagendra Nath ..	.. Assistant, Accountant-General's Office, Bengal	..	.. Treasury Buildings ..	.. ditto
Ganguli, Narendra Nath ..	. Clerk, Shaw, Wallace & Co	.. ..	.. 4, Bankshall Street ..	.. ditto
Ganguli, P, MA ..	.. Lecturer, Calcutta University	.. ..	.. Senate House ..	.. ditto
Ganguli, P ..	.. Clerk, Burmah-Shell Co of India, Ld	.. ..	.. Hongkong House ..	.. ditto
Ganguli, Panchanan ..	.. Assistant, Lionel Edwards, Ld	.. ..	.. D-1, Clive Buildings ..	.. ditto
Ganguli, Pashupati ..	.. Assistant, South British Insurance Co, Ld	..	.. 5, Clive Street ..	.. ditto
Ganguli, Pashupati ..	.. Clerk, C E S C, Ld	.. ..	.. Victoria House ..	.. ditto
Ganguli, Phani Bhusan ..	.. Clerk, National Bank of India, Ld	.. ..	.. 104, Clive Street ..	.. ditto
Ganguli, Phanindra Nath, MA, GDA	Examiner of Accounts, Income-tax Office	..	.. 1, Hare Street ..	.. ditto
Ganguli, Prabodh Chandra, MSC, BT ..	Assistant Head Master, Hindu School	.. ..	.. College Square ..	.. ditto
Ganguli, Prabodh Chandra ..	Clerk, Gillanders, Arbuthnot & Co	.. ..	.. 8, Clive Street ..	.. ditto
Ganguli, Prabodh Chandra ..	Assistant, Mackinnon, Mackenzie & Co	.. ..	.. 16, Strand Road ..	.. ditto
Ganguli, Pramatha Nath ..	Clerk, Central Registery, E I R	.. ..	.. E I R House ..	.. ditto
Ganguli, Prantosh ..	.. Assistant, Office of the I-G of Registration, Bengal		.. Writers' Buildings ..	.. ditto
Ganguli, Preeti Kumar ..	.. Clerk, Post Audit, Port Commissioners' Office	..	.. Strand Road ..	.. ditto
Ganguli, R ..	.. Assistant, Mackinnon, Mackenzie & Co	.. ..	.. 8, Strand Road ..	.. ditto
Ganguli, Rajendra Nath ..	.. Clerk, Gillanders, Arbuthnot & Co	.. ..	.. 8, Clive Street ..	.. ditto
Ganguli, Rajendra Nath ..	.. Assistant, Office of the Suptg Engineer, Central Circle, PWD		.. Writers' Buildings ..	.. ditto

No.	Names.	Style or calling.	Residence or place of business.	Religion.
	Ganguli, Rajendra Nath	Assistant, Explosives Office	1, Council House Street	Hindu
	Ganguli, Sasthidas, BA	Assistant, Calcutta University	Senate House	ditto
	Ganguli, S C	Stenographer, Associated Electrical Industries (India). Ld ..	A-3, Clive Buildings	ditto
	Ganguli, Shailendra Nath ..	Assistant Reporter, Secretary's Department, Calcutta Corporation	Municipal Office	ditto
	Ganguli, Shibnath	Assistant, Office of the Suptg Engineer, S Circle, P W D ..	3, Government Place, West ..	ditto
	Ganguli, Shreedam Ch	Clerk, Turner, Morrison & Co, Ld	6, Lyons Range	ditto
	Ganguli, Shripati, BL	Clerk, C R E's Office, P & A Circle	Fort William	ditto
	Ganguli, S K	Assistant, Barry & Co	2, Fairlie Place	ditto
	Ganguli, S K	Clerk, Burmah-Shell Co of India, Ld	Hongkong House	ditto
	Ganguli, S K	Stenographer, Associated Electrical Industries (India), Ld ..	A-3, Clive Buildings	ditto
	Ganguli, Sudhangsu Kumar, BSc, GDA	Examiner of Accounts, Income-tax Office	1, Hare Street	ditto
	Ganguli, S R	Clerk, C E S C, Ld	Victoria House	ditto
	Ganguli, Sudhir Ch	Assistant, Price, Waterhouse, Peat & Co	B-4, Clive Buildings	ditto
	Ganguli, Sudhir Ch	Head Clerk, Traffic Department, E B R	3, Kaylaghat Street	ditto
	Ganguli, Sudhir Ranjan	Clerk, Accounts Office, E I R	E I R House	ditto
	Ganguli, Surendra Nath	Clerk, Cash and Pay Section, Port Commissioners' Office ..	Strand Road	ditto
	Ganguli, Surendra Nath	Book-keeper, Imperial Tobacco Co of India, Ld	37, Chowringhee	ditto

Ganguli, Surendra Nath ..	.. Head Assistant, Presidency College	.. ..	..	86-1, College Street	.. .. ditto
Ganguli, Suresh Chandra	.. Clerk, Harrisons & Crosfield, Ld	.. ..	..	6, Church Lane	.. .. ditto
Ganguli, Sushil Kumar ..	.. Clerk, C A O's Office, E I R	.. ..	..	E I R House	.. .. ditto
Ganguli, Tarakali ..	.. Assistant, Legislative Department, Bengal	..	..	Council House	.. .. ditto
Ganguli, Tulsi Lochan ..	.. Stenographer, Bengal Secretariat, Finance Department		..	Writers' Buildings	.. .. ditto
Ganguli, Umapati ..	.. Assistant, Superintending Engineer's Office, P W D, Central Circle			Writers' Buildings	.. .. ditto
Ganguli, Upendra Nath ..	.. Clerk, Office of the Controller of Army Factory Accounts		..	6, Explanade, East	.. .. ditto
Ghatak, Akshaya Kumar	.. Clerk, Office of the Chief Mining Engineer, Railway Board		..	1, Council House Street	.. ditto
Ghatak, Kshetra Mohan	.. Assistant Book-keeper, Imperial Tobacco Co of India, Ld		..	37, Chowringhee	.. .. ditto
Ghatak, Lalit Mohan ..	.. Clerk, Ralli Brothers, Ld	..	..	16, Hare Street	.. .. ditto
Ghatak, Mahendra Nath	.. Assistant Rates Clerk, C C M's Office, E I R	..	..	E I R House	.. .. ditto
Ghatak, Nagendra Nath ..	.. Hd Clerk, Ex Engineer's Office, Western Electrical Dn		..	Writers' Buildings	.. .. ditto
Ghatak, Shashanka Mohan, BA	.. Journalist, *Commerce*	..	..	303, Bowbazar Street	.. .. ditto
Ghatak, Sudhir Chandra	.. Assistant, Accountant-General's Office, Bengal	..	..	Treasury Buildings	.. .. ditto
Ghosal, Atul Krishna ..	.. Head Clerk, Income-tax Office	.. ..	..	6, Esplanade, East	.. .. ditto
Ghosal, Bankim Chandra..	.. Assistant, Sun Life of Canada	.. ..	..	12, Dalhousie Square, East	.. ditto
Ghosal, B D ..	.. Assistant, Barry & Co	..	..	2, Fairlie Place	.. .. ditto
Ghosal, Bibhuti Bhusan ..	.. Assistant, McLeod & Co	. ..	..	28, Dalhousie Square	.. .. ditto

No.	Names.	Style or calling.	Residence or place of business.	Religion.
	Ghosal, Binaya Krishna ..	.. Steno-typist, W T Henley's Telegraph Works Co, Ld	.. Old Court House Corner	.. Hindu
	Ghosal, Charu Chandra ..	.. Section-holder, Government of India Press ..	.. 8, Hastings Street ..	.. ditto
	Ghosal, Charu Pada ..	.. Clerk, C A O's Office, E I R	.. E I R House ..	.. ditto
	Ghosal, Dinanath ..	.. Head Clerk, Tagore Raj Estate	.. Tagore Castle ..	.. ditto
	Ghosal, Jatindranath ..	.. Assistant, Sun Life of Canada	.. 12, Dalhousie Square, East	.. ditto
	Ghosal, Jitendra Mohan ..	.. Assistant, Martin & Co	.. 12, Mission Row ..	.. ditto
	Ghosal, Jogendra Mohan	.. Clerk, R. Sim & Co, Ld	.. 2, Clive Row ..	.. ditto
	Ghosal, Kali Krishna ..	.. Assistant, Income-tax Office	.. 3, Government Place, West	.. ditto
	Ghosal, Kali Mohan ..	.. Head Clerk, City College	.. 102-1, Amherst Street ..	.. ditto
	Ghosal, Kishori Mohan ..	.. Clerk, Traffic Department, E B R	.. 3, Kaylaghat Street ..	.. ditto
	Ghosal, K M ..	.. Clerk, Standard Life Assurance Co	.. 32, Dalhousie Square ..	.. ditto
	Ghosal, Kshirode Gopal ..	.. Assistant, Mackinnon. Mackenzie & Co	.. 16, Strand Road ..	.. ditto
	Ghosal, Madhusudan, MA..	.. Head Clerk. Income-tax Office	.. 1, Hare Street ..	.. ditto
	Ghosal, Nripendra Nath ..	.. Assistant, Andrew, Yule & Co, Ld	.. 8, Clive Row ..	.. ditto
	Ghosal, Phanibhusan ..	.. Clerk, CA's Office, E I R	.. E I R House ..	.. ditto
	Ghosal, Prafulla Chandra	.. Clerk, Calcutta Improvement Trust	.. 5, Clive Street ..	.. ditto
	Ghosal, Sailendra Nath ..	.. Accountant and Cashier, J H Fenner & Co, Ld ..	.. Mercantile Buildings ..	.. ditto

Ghosal, Shibdas ..	.. Assistant, Andrew, Yule & Co, Ld	.. 8, Clive Row	ditto
Ghosal, Sudhan Krishna ..	.. Cashier, Government of India Press	.. 8, Hastings Street	ditto
Ghosal, Sudhangshu Kumar, BA ..	Clerk, Lloyds Bank, Ld	.. 101-1, Clive Street	ditto
Ghose, Abanimohan, BA ..	.. Assistant, Office of the Director of Industries, Bengal	.. 40-1A, Free School Street ..	ditto
Ghose, Abodh Gopal ..	.. Assistant Book-keeper, Royal Calcutta Turf Club ..	.. 11, Rusell Street	ditto
Ghose, A C ..	.. Eastern Group Manager, Brooke Bond (India), Ld	.. 2, Metcalfe Street	ditto
Ghose, A K ..	.. Assistant, Y M C A, Ronaldshay Hut	.. Outram Road	ditto
Ghose, A K ..	.. Assistant, G E C (India), Ld	.. Magnet House, Chittaranjan Avenue (South).	ditto
Ghose, Akshaya Kumar ..	.. Head Clerk, G R E's Office, P & A District ..	.. Fort William	ditto
Ghose, Amal Chandra, BA ..	Assistant, Calcutta University	.. Senate House	ditto
Ghose, Amarendra Nath ..	.. Head Assistant, Office of the Director of Public Health, Bengal ..	Writers' Buildings	ditto
Ghose, Amarendra Nath ..	Professor, Bangabasi College	.. 25-1, Scott Lane	ditto
Ghose, Amarendra Nath ..	.. Assistant, Price, Waterhouse, Peat & Co ..	.. B-4, Clive Buildings	ditto
Ghose, Amar Nath, BA ..	.. Teacher, City School	.. 13, Mirzapur Street	Brahmo
Ghose, Amiya Lal, BSc ..	.. Organiser, Hindusthan Co-operative Insurance Society, Ld	.. Hindusthan Buildings ..	Hindu
Ghose, Amiya Nath ..	.. Assistant, Bengal Chamber of Commerce ..	.. 2, Clive Street	ditto
Ghose, Amrita Lal ..	.. Stenographer, Williamson, Magor & Co ..	. 4, Mangoe Lahe	ditto

No.	Names.	Style or calling.	Residence or place of business.	Religion.
	Ghose, A N ..	.. Clerk, Calcutta Mint	.. 47, Strand Road	Hindu
	Ghose, Anadi Chandra ..	.. Assistant, Calcutta University	.. Senate House	ditto
	Ghose, Ananta Nath ..	.. Assistant, Accountant-General's Office, Bengal ..	.. Treasury Buildings	ditto
	Ghose, Anil Chandra ..	.. Stenographer, Mather & Platt, Ld ..	.. 7, Hare Street	ditto
	Ghose, Anil Krishna ..	.. Ledger-keeper, Geo Henderson & Co, Ld ..	.. 101-1 Clive Street	ditto
	Ghose, Anil Kumar, BA ..	.. Assistant, Accountant-General's Office, Bengal ..	.. Treasury Buildings	ditto
	Ghose, Ardhendushekhar, BSC	.. Salesman, Dodge & Seymour, Ld	.. Tower House, Chowringhee Square ..	ditto
	Ghose, Ashutos ..	.. Clerk, Railway Audit, Port Commissioners' Office ..	.. Strand Road	ditto
	Ghose, Ashutos ..	.. Assistant, Calcutta University	.. Senate House	ditto
	Ghose, Ashutos ..	.. Assistant, Office of the Private Secy to H E the Governor of Bengal.	Government House	ditto
	Ghose, Ashutos ..	.. Assistant, Indian Stores Department (Inspection) ..	.. 6, Esplanade, East	ditto
	Ghose, A T ..	.. Assistant, Guest, Keen, Williams, Ld ..	.. 7, Council House Street	ditto
	Ghose, Atul Krishna ..	.. Wards Head Clerk, Presidency Commissioner's Office	.. 3, Charnock Place	ditto
	Ghose, Baidyanath ..	.. Chief Clerk, *Statesman*, Ld	.. Statesman House	ditto
	Ghose, Balai Chand ..	.. Professor, Bangabasi College	.. 25-1, Scott Lane	ditto
	Ghose, Bamacharan ..	.. Assistant, Accountant-General's Office, Bengal ..	.. Treasury Buildings	ditto
	Ghose, Banamali ..	.. Assistant, Accounts Department, Calcutta Corporation	.. Municipal Office	ditto

Ghose, Basanta Kumar, BA	Assistant, Accounts Department, Calcutta Corporation	Municipal Office		ditto
Ghose, Batakrishna	Clerk, Shaw, Wallace & Co	4, Bankshall Street		ditto
Ghose, B B	Assistant, Mackinnon, Mackenzie & Co	16, Strand Road		Christian
Ghose, B B	Clerk, Burmah-Shell Co of India, Ld	Hongkong House		Hindu
Ghose, Bhabanath	Assistant, McLeod & Co	28, Dalhousie Square		ditto
Ghose, Bhuban Mohan	Assistant, Mackinnon, Mackenzie & Co	16, Strand Road		ditto
Ghose, Bhupati Bhusan	Assistant, Office of the Controller of Currency	Treasury Buildings		ditto
Ghose, Bhupendra Lal	Clerk, Calcutta Improvement Trust	5, Clive Street		ditto
Ghose, Bhupendra Nath	Clerk, Chemical Examiner's Office, Bengal	Medical College		ditto
Ghose, Bijaya Krishna	Head Clerk, Fire Department, Jardine, Skinner & Co	4, Clive Row		ditto
Ghose, Binaya Krishna	Clerk, C E's Office, E I R	E I R House		ditto
Ghose, Binode Bihari	Clerk, Place, Siddons & Gough	6, Lyons Range		ditto
Ghose, Binode Bihari	Assistant, Mackinnon, Mackenzie & Co	16, Strand Road		ditto
Ghose, Binode Bihari	Assistant, Bengal Chemical and Pharmaceutical Works, Ld	31, Chittaranjan Avenue, South		ditto
Ghose, Binode Bihari	Clerk, C C M's Office, E I R	E I R House		ditto
Ghose, Bipin Bihari	Assistant, Mackinnon, Mackenzie & Co	16, Strand Road		ditto
Ghose, Bipin Bihari	Assistant, Grahams Trading Co (India), Ld	6, Lyons Range		ditto

No.	Names.	Style or calling.	Residence or place of business.	Religion.
	Ghose, Birchand ..	.. Assistant, F W Heilgers & Co	.. 1-1, Clive Street	Hindu
	Ghose, Birendra Nath ..	.. Head Clerk, Calcutta Corporation, Distt I ..	.. 79, Cornwallis Street	ditto
	Ghose, B K, BA ..	.. Cashier, Britannia Biscuit Co, Ld	.. Stephen House	ditto
	Ghose, B K ..	.. Clerk, Remington Rand Ind	.. 3, Council House Street ..	ditto
	Ghose, B N ..	.. Assistant Bullion-keeper, Calcutta Mint	.. 47, Strand Road	ditto
	Ghose, Chandi Charan ..	.. Assistant, Bird & Co	.. 1-1, Clive Street	ditto
	Ghose, Chandra Shekhar, MSc ..	Assistant Lecturer, Calcutta University ..	.. 92, Upper Circular Road ..	ditto
	Ghose, Charu Chandra ..	.. Assistant, Kettlewell, Bullen & Co, Ld	.. 21, Strand Road	ditto
	Ghose, Debendra Nath ..	.. Education Assistant, Presidency Commissioner's Office	.. 3, Charnock Place	ditto
	Ghose, Debendra Nath ..	.. Assistant, Accountant-General's Office, Bengal ..	.. Treasury Buildings	ditto
	Ghose, Dhirendra Nath .	.. Head Clerk, Chemical Examiner's Office, Bengal ..	.. Medical College	ditto
	Ghose, Dhirendra Nath ..	.. Clerk, Shaw, Wallace & Co	.. 4, Bankshall Street	ditto
	Ghose, D N ..	.. Deputy Accountant, Calcutta Mint	.. 47, Strand Road	ditto
	Ghose, D N. ..	.. Assistant Bullion-keeper, Calcutta Mint	.. 47, Strand Road	ditto
	Ghose, Durgadas, BA ..	.. Assistant, Accountant-General's Office, Bengal ..	.. Treasury Buildings	ditto
	Ghose, F N ..	.. Clerk, C E S C, Ld	.. Victoria House	ditto
	Ghose, Gadadhar ..	.. Assistant, Income-tax Office	.. 1, Hare Street	ditto

Ghose, Gadadhar, BSC	Assistant, Bengal Secretariat, Judicial Department	Writers' Buildings	ditto	
Ghose, Gangadhar	Assistant, Accountant-General's Office, Bengal	Treasury Buildings	ditto	
Ghose, Girindra Nath	Assistant, Halley Bros, Ld	7, Canning Street	ditto	
Ghose, Gopal Krishna	Assistant, Commercial Intelligence Department, India	1, Council House Street	ditto	
Ghose, Gostha Bihari	Head Clerk, General Department, Birla Brothers, Ld	8, Royal Exchange Place	ditto	
Ghose, Haran Chandra	Stenographer, Indian School Supply Depôt	Chittaranjan Avenue, South	ditto	
Ghose, Harendra Krishna	Stenographer, W T Henley & Telegraph Works Co, Ld	Old Court House Corner	ditto	
Ghose, Hari Charan	Assistant, Martin & Co	12, Mission Row	ditto	
Ghose, Hari Charan	Professor, Bangabasi College	25-1, Scott Lane	ditto	
Ghose, Haridas, BA	Assistant, Education Department, Bengal Secretariat	Writers' Buildings	ditto	
Ghose, Haridhan	Clerk, Alliance Assurance Co, Ld	2, Hare Street	ditto	
Ghose, Haripada	Assistant, Accountant-General's Office, Bengal	Treasury Buildings	ditto	
Ghose, Haripada	Assistant, Office of the Director of Industries, Bengal	40-1A, Free School Street	ditto	
Ghose, Harish Chandra, BA	Assistant, Office of the Director of Industries, Bengal	40-1A, Free School Street	ditto	
Ghose, H C	Clerk, Burmah-Shell Co of India, Ld	Hongkong House	ditto	
Ghose, H C	Reader, P S Office, E I R	E I R House	ditto	
Ghose, Hem Chandra, BA	Assistant, Accountant-General's Office, Bengal	Treasury Buildings	ditto	

No.	Names.	Style or calling.	Residence or place of business.	Religion.
	Ghose, Hem Chandra	Assistant, Office of the I-G of Police	Writers' Buildings	Hindu
	Ghose, Hiralal	Assistant, Bengal Secretariat, Revenue Department ..	Writers' Buildings	ditto
	Ghose, Hiran Kumar	Assistant, Accountant-General's Office, Bengal ..	.. Treasury Buildings	ditto
	Ghose, Hrisikesh	Clerk, Ralli Brothers, Ld	16, Hare Street	ditto
	Ghose, Indra Narayan	Assistant, Office of the Controller of Currency ..	.. Treasury Buildings	ditto
	Ghose, Indu Prakash	Partner, Dwarkin & Son .. .	.. 12A, Park Street	ditto
	Ghose, Jadu Gopal, BSC, BL ..	Sub-Head, Statistical Office, E I R	.. E I R House	ditto
	Ghose, Jagat Chandra	Assistant, Macneill & Co	.. 2, Fairlie Place	ditto
	Ghose, Janaki Nath	Assistant, Mackinnon, Mackenzie & Co	.. 16, Strand Road	ditto
	Ghose, Jatindra Mohan	Assistant, Accountant-General's Office, Bengal ..	.. Treasury Buildings	ditto
	Ghose, Jatindra Mohan	Clerk, Turner, Morrison & Co, Ld	.. 6, Lyons Range	ditto
	Ghose, Jatindra Mohan, MA ..	Professor, Vidyasagar College	.. 39, Shankar Ghose Lane	ditto
	Ghose, Jatindra Nath	Chief Clerk, Union Insurance Society of Canton, Ld ..	8, Clive Street	ditto
	Ghose, Jatindra Nath	Assistant, Bengal Secretariat, Political Department ..	.. Writers' Buildings	ditto
	Ghose, Jatindra Nath	Assistant, Macneill & Co	.. 2, Fairlie Place	ditto
	Ghose, Jatindra Nath	Assistant, Accountant-General's Office, Bengal ..	.. Treasury Buildings	ditto

Ghose, Jatindra Prasad ..	.. Assistant, Accountant-General's Office, Bengal ..	.. Treasury Buildings ..	..	ditto
Ghose, J C ..	.. Assistant, Royal Insurance Co, Ld	.. 26 & 27, Dalhousie Square	..	ditto
Ghose, Jitendra N ..	.. Assistant, Grahams Trading Co (India), Ld ..	.. 6, Lyons Range ..	..	ditto
Ghose, Jitendra Nath ..	.. Assistant, Bengal Secretariat, Revenue Department ..	.. Writers' Buildings ..	..	ditto
Ghose, Jitendra Nath ..	.. Clerk, C M E's Office, E I R	.. E I R House ..	..	ditto
Ghose, Jnanendra Chandra	.. Head Assistant, Civil Veterinary Department ..	.. Writers' Buildings ..	..	ditto
Ghose, Jnanendra Nath ..	.. Head Assistant, Office of the I-G of Police ..	.. Writers' Buildings ..	..	ditto
Ghose, Jnanendra Nath ..	.. Head Clerk, Mills Department, Jardine, Skinner & Co	.. 4, Clive Row ..	..	ditto
Ghose, Jogesh Chandra ..	.. Clerk, Shaw, Wallace & Co	.. 4, Bankshall Street ..	..	ditto
Ghose, Jyotish Chandra BA, GDA	.. Examiner of Accounts, Income-tax Office ..	.. 6, Esplanade, East ..	..	ditto
Ghose, Kalidas ..	.. Clerk, Collection Department, Calcutta Corporation ..	.. Municipal Office ..	..	ditto
Ghose, Kali Kinkar ..	.. Assistant, Accountant-General's Office, Bengal ..	.. Treasury Buildings ..	..	ditto
Ghose, Kalipada ..	.. Assistant, Central Stationery Office	.. 3, Church Lane ..	..	ditto
Ghose, Kalipada ..	.. Broker, David Sassoon & Co, Ld ..	.. 4, Lyons Range ..	..	ditto
Ghose, Kanai Lal ..	.. Head Assistant, Sec II, Accounts Department, Calcutta Corporation	.. Municipal Office ..	..	ditto
Ghose, Kanai Lal ..	.. Assistant, Accountant-General's Office, Bengal ..	.. Treasury Buildings ..	..	ditto
Ghose, Kangali Charan ..	.. Clerk, Book Section, Port Commissioners' Office ..	.. Strand Road ..	..	ditto

No.	Names.	Style or calling.	Residence or place of business.	Religion.
	Ghose, Khagendra Nath ..	Head Ref Clerk, Bengal Secretariat, Finance Department	.. Writers' Buildings ..	.. Hindu
	Ghose, Kiran Chandra ..	.. Journalist, *Statesman*, Ld	.. Statesman House ..	.. ditto
	Ghose, Kiran Chandra ..	.. Assistant, Mackinnon, Mackenzie & Co ..	.. 16, Strand Road ..	.. ditto
	Ghose, Krishna Dhan ..	.. Clerk, C O S Office, E I R ..	.. E I R House ..	.. ditto
	Ghose, Krishna Pada, MSC	.. Demonstrator, Scottish Church College ..	.. 4, Cornwallis Square ..	.. ditto
	Ghose, Kshitish Chandra..	.. Clerk, Alliance Assurance Co, Ld ..	.. 2, Hare Street ..	.. ditto
	Ghose, Kumar Krishna ..	.. Assistant, Royal Calcutta Turf Club ..	.. 11, Russell Street ..	.. ditto
	Ghose, Kumud Nath ..	.. Assistant, Bird & Co ..	.. 1-1, Clive Street ..	.. ditto
	Ghose, Kunja Bihari, BA..	.. Assistant, Accountant-General's Office, Bengal ..	.. Treasury Buildings ..	.. ditto
	Ghose, Lal Bihari ..	.. Clerk, Accounts Department, E B R ..	.. 3, Kaylaghat Street ..	.. ditto
	Ghose, Lalit Kumar	.. Clerk, Pre-Audit, Port Commissioners' Office ..	.. Strand Road ..	.. ditto
	Ghose, Lal Mohan ..	.. Clerk, Traffic Department, E B R ..	.. 3, Kaylaghat Street ..	.. ditto
	Ghose, Lal Mohan ..	.. Clerk, Burmah-Shell Co of India, Ld ..	.. Hongkong House ..	.. ditto
	Ghose, L M ..	.. Cashier, Oriental Govt Security Life Assurance Co, Ld	.. 2, Clive Row ..	.. ditto
	Ghose, Madhabi Kanta, BSC	.. Assistant, Agriculture and Industries Department, Bengal	.. Writers' Buildings ..	.. ditto
	Ghose, Madhusudan ..	.. Assistant, Office of the Inspector-General of Registration, Bengal	Writers' Buildings ..	.. ditto
	Ghose, Makhan Lal ..	.. Clerk, Royal Insurance Co, Ld ..	.. 26 & 27, Dalhousie Square ..	.. ditto

Ghose, Manmatha Nath ..	..	Clerk, Book Section, Port Commissioners' Office ..	.. Strand Road ..	.. ditto
Ghose, Manmatha Nath ..	..	Inspector, License Dept, Calcutta Corporation ..	.. Municipal Office ..	.. ditto
Ghose, Manmatha Nath ..	..	Assistant, Government of India Press	.. 8, Hastings Street ..	.. ditto
Ghose, Manmohan ..	..	Assistant, Agriculture and Industries Department, Bengal ..	Writers' Buildings ..	.. ditto
Ghose, M N ..	..	Assistant, Bengal Secretariat Record Room ..	.. Writers' Buildings ..	.. Christian
Ghose, Mohini Mohan ..	..	Assistant, Office of the Inspector-General of Registration, Bengal	Writers' Buildings ..	.. Hindu
Ghose, N ..	..	Head Clerk, Sutton & Sons, Ld	.. 35, Park Mansions ..	.. ditto
Ghose, Nalin Bihari ..	..	Clerk, Grindlay & Co, Ld	.. 6, Church Lane ..	.. ditto
Ghose, Nalini Kanta ..	..	Assistant, Ludlow Jute Co, Ld	.. 7, Royal Exchange Place	.. ditto
Ghose, Nalini Nath ..	..	Clerk, Agent's Office, E B R	.. 3, Kaylaghat Street ..	.. ditto
Ghose, Nalini Nath ..	..	Surveyor, Calcutta Improvement Trust	.. 5, Clive Street ..	.. ditto
Ghose, Nanda Dulal, MSC	..	Lecturer, Ripon College	.. 24, Harrison Road ..	.. ditto
Ghose, Nani Gopal, BA ..	..	Assistant, Bengal Secretariat, Finance Department ..	.. Writers' Buildings ..	.. ditto
Ghose, Narendra Krishna	..	Ledger-keeper, Bombay Co, Ld	.. 19, British Indian Street	.. ditto
Ghose, Narendra Krishna	..	Chief Clerk, Office of the Geological Survey of India	.. 27, Chowringhee ..	.. ditto
Ghose, Narendra Nath, BA	..	Assistant, Commercial Intelligence Department, India	.. 1, Council House Street ..	.. ditto
Ghose, Narendra Nath ..	..	Assistant, Mackinnon, Mackenzie & Co	.. 16, Strand Road ..	.. ditto
Ghose, Nibaran Chandra	..	Surveyor and Valuer, Land Acquisition Office ..	.. 5, Bankshall Street ..	.. ditto

No.	Names.	Style or calling.	Residence or place of business.	Religion.
	Ghose, Nihar Ranjan, BA	.. Divisional Accountant, A-G's Office, Bengal	.. .. Treasury Buildings	Hindu
	Ghose, Niranjan ..	.. Head Assistant, Income-tax Office	.. Imperial Secretariat Buildings ..	ditto
	Ghose, Nirendra Prasad	. Stenographer, Office of the Director of Public Instruction, Bengal	Writers' Buildings	ditto
	Ghose, Nirmal Chandra, BSc	.. Assistant, Botanical Survey of India ..	.. Indian Museum	ditto
	Ghose, Nirmal Ratan ..	.. Clerk, Agent's Office, E I R . ..	.. E I R House	ditto
	Ghose, Nitai Charan ..	.. Assistant, F W Heilgers & Co	.. 1-1, Clive Street ..	ditto
	Ghose, N N ..	.. Assistant Superintendent, Stores, C E S C, Ld ..	.. Victoria House	ditto
	Ghose, N R ..	.. Offg Audit Inspector, Port Commissioners' Office ..	.. Strand Road	ditto
	Ghose, Nripendra Nath ..	.. Research Assistant to Palit Prof of Chemistry, Calcutta University	92, Upper Circular Road ..	ditto
	Ghose, Nritya Gopal ..	.. Assistant, Imperial Record Department	.. Treasury Buildings	ditto
	Ghose, P ..	.. Head Clerk, Traffic, Calcutta Tramways Co, Ld ..	.. 7, Church Lane	ditto
	Ghose, Panchanan, BL ..	.. Assistant, Accounts Department, Calcutta Corporation	.. Municipal Office	ditto
	Ghose, Panchanan ..	.. Head Clerk, Share Department, Jardine, Skinner & Co	.. 4, Clive Row	ditto
	Ghose, Panchanan, BA ..	.. Teacher, New Indian School	.. 159 and 160, Cornwallis Street ..	ditto
	Ghose, Pannalal, BSc ..	.. Assistant, Accountant-General's Office, Bengal ..	.. Treasury Buildings	ditto
	Ghose, Paresh Nath ..	.. Assistant, Bengal Secretariat, Accounts Department	.. Writers' Buildings	ditto
	Ghose, Pashupati Nath ..	.. Accountant, Roneo, Ld	.. 9, Clive Street	ditto

Ghose, P C	Accountant, Government Shipping Office	15-1, Strand Road	ditto
Ghose, Phakir Chandra, MA	Assistant, Commercial Intelligence Deptt, India	1, Council House Street	ditto
Ghose, Phani Bhusan	Clerk, Kilburn & Co	4, Fairlie Place	ditto
Ghose, Phelaram	Assistant, Office of the Controller of Currency	Treasury Buildings	ditto
Ghose, P N, MA	Lecturer, Islamia College	8, Wellesley Street	ditto
Ghose, Prabodh Chandra	Assistant, Commercial Intelligence Department, India	1, Council House Street	ditto
Ghose, Prabodh Chandra	Assistant, Indian Stores Department (Inspection)	6, Esplanade, East	ditto
Ghose, Prafulla Kumar, BA	Assistant, Board of Revenue, Bengal	Writers' Buildings	ditto
Ghose, Pramatha Bhusan	Assistant, Bengal Secretariat, Irrigation Department	Writers' Buildings	ditto
Ghose, Pratul Chandra	Professor, Bangabasi College	25-1, Scott Lane	ditto
Ghose, Pravas Chandra	Assistant, Office of the Director of Industries, Bengal	40-1A, Free School Street	ditto
Ghose, Pravas Chandra	Engineer, F & C Oslar, Ld	12, Old Court House Street	ditto
Ghose, Pravas Chandra	Clerk, C A O's Office, E I R	E I R House	ditto
Ghose, Purna Chandra	Artist, *Statesman*, Ld	Statesman House	ditto
Ghose, Purnendushekhar	Assistant, Dodge and Seymour, Ld	Tower House, Chowringhee Square	ditto
Ghose, Radha Binode	Clerk, Shaw, Wallace & Co	4, Bankshall Street	ditto
Ghose, Radhika Mohan	Head Assistant, Income-tax Office	6, Esplanade, East	ditto

No.	Names.	Style or calling.	Residence or place of business.	Religion.
	Ghose, Raicharan, BA, BT ..	Assistant Master, Hare School	.. 87, College Street	Hindu
	Ghose, Rajendra Nath	Clerk, Cash Deptt, Imperial Bank of India ..	.. Strand Road	ditto
	Ghose, Rajendra Nath	Assistant, Commercial Intelligence Department, India .	.. 1, Council House Street	ditto
	Ghose, Raj Krishna	Head Mechanic, Govt of India Press ..	.. 8, Hastings Street	ditto
	Ghose, Rakhal Chandra ..	Senior Clerk, Office of the Controller of Purchase, Indian Stores Department	6, Esplanade, East	ditto
	Ghose, Ramesh Chandra, BA ..	Secretary, Bengal Enamel Works, Ld	.. 1, British Indian Street	ditto
	Ghose, Ramesh Chandra	R D Inspector, E B R	.. 3, Kaylaghat Street	ditto
	Ghose, Ramesh Chandra, MA, BL ..	Assistant, Commercial Intelligence Department, India	.. 1, Council House Street	ditto
	Ghose, Ramgopal	Accounts Clerk, E B R	.. 3, Kaylaghat Street	ditto
	Ghose, Ramjitendra	Stenographer, Indian Stores Department (Inspection)	.. 6, Esplanade, East	ditto
	Ghose, Rasamaya	Clerk, C A's Office, E I R	.. E I R House	ditto
	Ghose, Sajani Mohan	Assistant, Accounts Department, Calcutta Corporation	.. Municipal Office	ditto
	Ghose, Samul Kristo	Assistant, Bird & Co	.. 1-1, Clive Street	ditto
	Ghose, Santos Kumar	Ledger-keeper, Geo Henderson & Co, Ld ..	.. 101-1, Clive Street	ditto
	Ghose, Santos Kumar, BSC ..	Assistant, Accountant-General's Office, Bengal ..	.. Treasury Buildings	ditto
	Ghose, Santos Kumar	Assistant, Macneill & Co ..	.. 2, Fairlie Place	ditto
	Ghose, Sarojendu	Audit Inspector, Port Commissioners' Office ..	.. Strand Road	ditto

Ghose, Satindra Mohan, MA	..	Clerk, Office of the Controller of Army Factory Accounts	..	6, Esplanade, East	.. .. ditto
Ghose, Satish Chandra ..	..	Clerk, Licensed Measurers Department	..	2, Clive Street	.. .. ditto
Ghose, Satish Chandra, BL	..	Assistant, Bengal Secretariat, Finance Department ..	..	Writers' Buildings	.. .. ditto
Ghose, Satish Chandra ..	..	Clerk, I G N & Ry Co, Ld	..	4, Fairlie Place	.. .. ditto
Ghose, Satish Chandra ..	..	Assistant, Mackinnon, Mackenzie & Co ..	..	16, Stand Road	.. .. ditto
Ghose, Satish Chandra ..	..	Chief Clerk & Cashier, Mather & Platt, Ld ..	..	7, Hare Street	.. .. ditto
Ghose, Satish Chandra ..	..	Clerk, C O P S Office, E I R	..	E I R House	.. .. ditto
Ghose, Satyasaran ..	..	Assistant, Accountant-General's Office, Bengal ..	..	Treasury Buildings	.. .. ditto
Ghose, S D ..	..	Assistant, Royal Insurance Co, Ld	..	26 & 27, Dalhousie Square	.. ditto
Ghose, Shachindra Nath	..	Assistant, Sun Life of Canada	..	12, Dalhousie Square, East	.. ditto
Ghose, Shailendra Kumar	..	Clerk, P D O, Imperial Bank of India	..	8, Council House Street	.. .. ditto
Ghose, Shailendra Mohan	..	Shift Engineer, Spl Officer's Department, Calcutta Corporation		Municipal Office	.. .. ditto
Ghose, Shailendra Nath ..	..	Bill Clerk, Geo Henderson & Co, Ld	..	101-1, Clive Street	.. .. ditto
Ghose, Sharat Chandra ..	..	Clerk, C O P S Office, E I R	..	E I R House	.. .. ditto
Ghose, Sharat Chandra ..	..	Assistant, Income-tax Office	..	1, Hare Street	.. .. ditto
Ghose, Shashanka Shekhar	..	Assistant, Calcutta University	..	Senate House	.. .. ditto
Ghose, Shibkinkar, MSC ..	..	Assistant, Office of the Controller of Currency ..	..	Treasury Buildings	.. .. ditto
Ghose, Shishir Kumar, B COM	..	Assistant, Accountant-General's Office, Bengal ..	..	Treasury Buildings	.. .. ditto

No.	Names.	Style or calling.	Residence or place of business.	Religion.
	Ghose, Shital Das	Assistant, Accountant-General's Office, Bengal ..	.. Treasury Buildings	Hindu
	Ghose, Shital Prasad	Assistant, Bird & Co	.. 1-1, Clive Street	ditto
	Ghose, Shivaprasanna	Assistant, Accountant-General's Office, Bengal ..	.. Treasury Buildings	ditto
	Ghose, Shovamaya, MA	Professor, Vidyasagar College	.. 39, Sankar Ghose Lane	ditto
	Ghose, Shree Krishna ..	Clerk, Accounts Department, Imperial Bank of India	.. Strand Road	ditto
	Ghose, Shrish Chandra, BA ..	Assistant, Office of the Director of Public Instruction, Bengal	.. Writers' Buildings	ditto
	Ghose, Shrish Krishna	Clerk, Place, Siddons & Gough	.. 6, Lyons Range	ditto
	Ghose, Shyam Kinkar	Clerk, I G N & Ry Co, Ld	.. 4, Fairlie Place	ditto
	Ghose, Siddheshwar	Assistant, Cox & Kings (Agents) Ld ..	.. 5, Bankshall Street	ditto
	Ghose, S K	Assistant, Bird & Co	.. 1-1, Clive Street	ditto
	Ghose, S M	Clerk, Burmah-Shell Co of India, Ld	.. Hongkong House	ditto
	Ghose, S N	Assistant Inspector of Factories, Bengal	.. 40-1A, Free School Street ..	ditto
	Ghose, S N	Head Clerk, G E C (India), Ld	. Magnet House, Chittaranjan Avenue (South)	ditto
	Ghose, S N	Clerk, Burmah-Shell Co of India, Ld	.. Hongkong House	ditto
	Ghose, Subodh Chandra	Head Typist, Engineer's Office, E B R ..	.. 3, Kaylaghat Street	ditto
	Ghose, Sudeb Chandra	Assistant, Brooke Bond (India), Ld	.. 2, Metcalfe Street	ditto
	Ghose, Sudhir Chandra ..	Head Assistant, Emigration Office	.. 1, Mission Row	ditto

Ghose, Sudhir Kumar ..	.. Estimator, Executive Engineer's Office, Hijli Division, P W D	..	Writers' Buildings ..	.. ditto
Ghose, Sudhir Kumar	.. Clerk, Shaw, Wallace & Co	..	4, Bankshall Street ..	.. ditto
Ghose, Sudhir Kumar ..	.. Analyst, Calcutta Corporation	..	S S Hogg Market ..	.. ditto
Ghose. Suhrid Krishna, MA	.. Teacher, Bangabasi College School	..	25-1, Scott Lane .	.. ditto
Ghose, Suranjan, BA ..	.. Head Clerk, Income-tax Office	..	Imperial Secretariat Buildings	.. ditto
Ghose, Surendra Nath (No. I)	.. Sub-Head, Accounts Office, E I R	..	E I R House ..	.. ditto
Ghose, Surendra Nath, MA	.. Assistant, Calcutta University	..	Senate House ..	.. ditto
Ghose, Surendra Nath ..	.. Section Superintendent, Engineer's Office, E B R ..	..	3, Kaylaghat Street ..	.. ditto
Ghose, Surendra Nath ..	.. Assistant, Office of the Director of Industries, Bengal	..	40-1A, Free School Street	.. ditto
Ghose, Suresh Chandra, BSc, BL	.. Demonstrator, Scottish Church College	..	4, Cornwallis Square ..	.. ditto
Ghose, Suresh Chandra ..	.. Head Book-keeper, Royal Calcutta Turf Club ..	..	11, Russell Street ..	.. ditto
Ghose, Sushil Chandra ..	.. Costing Clerk, Lipton, Ld	..	9, Weston Street ..	.. ditto
Ghose, Sushil Chandra ..	.. Head Estimator, Office of the Supdtg Engineer, S Circle, P W D		3, Government Place, West	.. ditto
Ghose, Tarakinkar ..	.. Stenographer & Junior Council Reporter ..	..	Writers' Buildings ..	.. ditto
Ghose, Tarapada ..	.. Assistant, Bengal Secretariat, P W D	..	Writers' Buildings ..	.. ditto
Ghose, Trijan Mohan, BA	.. Assistant, Accountant-General's Office, Bengal ..	..	Treasury Buildings ..	.. ditto
Ghose, Tulsi Charan ..	.. Book-keeper, Harrisions & Crosfield, Ld ..	..	6, Church Lane ..	.. ditto

No.	Names.	Style or calling.	Residence or place of business.	Religion.
	Ghose, Tulsi Narayan ..	.. Assistant, Accountant-General's Office, Bengal ..	.. Treasury Buildings	Hindu
	Ghose, Upendra Nath ..	.. Assistant, Commercial Intelligence Department, India	.. 1, Council House Street	ditto
	Ghose, Upendra Nath ..	.. Accountant, Longmans Green & Co, Ld ..	.. 6, Old Court House Street ..	ditto
	Ghose, Upendra Nath ..	.. Assistant, Andrew, Yule & Co, Ld	.. 8, Clive Row	ditto
	Ghose, Usha Nath ..	.. Estimator, P H D, Bengal	.. 3, Charnock Place	ditto
	Golam, Sobhan ..	.. Head Clerk, Income-tax Office	.. 6, Esplanade, East	Mahomedan
	Gora, M C ..	.. Assistant, Shaw, Wallace & Co	.. 4, Bankshall Street	Zoroastrian
	Goswami, B R ..	.. Clerk, Burmah-Shell Co of India, Ld	.. Hongkong House	Hindu
	Goswami, Gouri Shankar, BA	.. Superintendent, Tagore Raj Estate	.. Tagore Castle	ditto
	Goswami, Hari Charan ..	.. Sheristadar, Calcutta Collectorate	.. 3, Charnock Place	ditto
	Goswami, Krishna Dhan ..	.. Assistant, University College	.. 92, Upper Circular Road ..	ditto
	Goswami, Narayan Krishna	.. Head Assistant, B R Section, Port Commissioners' Office	.. Strand Road ..	ditto
	Goswami, Prabodh Chandra	.. Clerk, Place, Siddons & Gough	.. 6, Lyons Range	ditto
	Goswami, Pulin Bihari ..	.. Head Clerk, Collection Department, Calcutta Corporation	.. Municipal Office	ditto
	Goswami, Purnananda, BA	.. Assistant, Bengal Secretariat, Finance Department ..	.. Writers' Buildings	ditto
	Goswami, Radha Kissen	.. Assistant, Birla Brothers, Ld	.. 8, Royal Exchange Place ..	ditto
	Goswami, Santosh Kumar	.. Assistant, Accountant-General's Office, Bengal ..	.. Treasury Buildings	ditto

Goswami, Shrish Chandra, MA	..	Divisional Accountant, Executive Engineer's Office, Hijli Division, P W D	Writers' Buildings	ditto
Goswami, Subodh Ranjan	..	Superintendent, Home Savings, Central Bank of India, Ld	100, Clive Street	ditto
Goswami, Surendra Nath, MA	..	Lecturer, Sanskrit College	College Square	ditto
Govindraj, Narayan	..	Artist, *Statesman*, Ld	Statesman House	ditto
Guha, Akshaya Kumar	..	Assistant, Office of the I-G of Police	Writers' Buildings	ditto
Guha, Anathbandhu	..	Head Assistant, Income-tax Office	6, Esplanade, East	ditto
Guha, Dhirendra Kumar, BA	..	Assistant, Calcutta University	Senate House	ditto
Guha, Hari Charan	..	Assistant, McLeod & Co	28, Dalhousie Square	ditto
Guha, Haridas	..	Overseer, City Division, P W D	Writers' Buildings	ditto
Guha, Kali Prasanna	..	Assistant, Income-tax Office	6, Esplanade, East	ditto
Guha, Mohini Mohan, BA	..	Cashier, May & Baker (India), Ld	3, Mangoe Lane	ditto
Guha, Nagendra Nath	..	Clerk, C O P S Office, E I R	E I R House	ditto
Guha, Prafulla Kumar	..	Stenographer and Senior Council Reporter	Writers' Buildings	ditto
Guha, Sachindra Nath, BSC, GDA	..	Examiner of Accounts, Income-tax Office	6, Esplanade, East	ditto
Guha, Shrish Chandra, BA, BT	..	Assistant Master, Hare School	87, College Street	ditto
Guha, Umapada	..	Clerk, C A O's Office, E I R	E I R House	ditto
Guha Ray, Hemendra Nath	..	Stock Verifier, Accounts Department, Calcutta Corporation	Municipal Office	ditto

No.	Names.	Style or calling.	Residence or place of business.	Religion.
	Guha Ray, Kiran Chandra, BSc	Assistant, Accountant-General's Office, Bengal	Treasury Buildings	Hindu
	Guin, Debendra Nath	Assistant, Bengal Secretariat, P W D	Writers' Buildings	ditto
	Gupta, Ajoy Kumar	Stenographer, Explosives Office	1, Council House Street	ditto
	Gupta, Akshaya Kumar	Examiner of Accounts, Income-tax Office	6, Esplanade, East	ditto
	Gupta, Amiya Kumar	Clerk, Prudential Assurance Co, Ld	Clive Buildings	ditto
	Gupta, Annada Prasad	Assistant, Accountant-General's Office, Bengal	Treasury Buildings	ditto
	Gupta, Ashwini Kumar, MA	Lecturer, Ripon College	24, Harison Road	ditto
	Gupta, Atul Chandra	Head Assistant, Sec III, Accounts Department, Calcutta Corporation	Municipal Office	ditto
	Gupta, Banamali	Stock Clerk, Texas Co (India), Ld	11, Esplanade, East	ditto
	Gupta, Batu Krishna	Stenographer, Bengal Telephone Corporation, Ld	8, Hare Street	ditto
	Gupta, Bhupendra Nath (Rai Sahib)	Hony Asst Engineer & Chief Draftsman, Engineer's Office, E B R	3, Kaylaghat Street	ditto
	Gupta, Bihari Lal	Clerk, Turner, Morrison & Co, Ld	6, Lyons Range	ditto
	Gupta, Bireshwar	Assistant, Office of the Director of Public Instruction, Bengal	Writers' Buildings	ditto
	Gupta, Dasarathi	Assistant, Geological Survey of India	27, Chowringhee	ditto
	Gupta, Debendra Nath	Assistant, Factory Inspection Department, Bengal	40-1A, Free School Street	ditto
	Gupta, Dhirendra Nath	Assistant, Bengal Secretariat, Political Department	Writers' Buildings	ditto
	Gupta, D N	Assistant, Burn & Co, Ld	12, Mission Row	ditto

Gupta, Ganesh Chandra ..	.. Assistant, P & O Banking Corporation, Ld ..	.. 1, Fairlie Place ..	..	ditto
Gupta, Gopal Chandra ..	.. Assistant, Office of the Controller of Currency ..	.. Treasury Buildings ..	..	ditto
Gupta, Gopal Chandra ..	.. Clerk, Agent's Office, E I R	.. E I R House ..	..	ditto
Gupta, Hari Charan ..	.. Assistant, Brooke Bond (India), Ld	.. 2, Metcalfe Street ..	..	ditto
Gupta, Haridas ..	.. Clerk, Jardine, Skinner & Co	.. 4, Clive Row ..	..	ditto
Gupta, Hemanta K ..	.. Assistant, Grahams Trading Co (India), Ld ..	.. 6, Lyons Range ..	..	ditto
Gupta, Himangshu Kumar	.. Assistant, Commercial Intelligence Department ..	.. 1, Council House Street	..	ditto
Gupta, Jadu Nath ..	.. Assistant, Calcutta Improvement Trust	.. 5, Clive Street ..	..	ditto
Gupta, Jagannath ..	.. Sole Proprietor, Jagannath Gupta & Co	.. 7-B, Clive Row ..	..	ditto
Gupta, Jagannath Prasad	.. Under-Broker, F C Pallachi & Co ..	.. 7, Royal Exchange Place	..	ditto
Gupta, Jatindra Nath	.. Head Draftsman, Engineer's Office, E B R ..	.. 3, Kaylaghat Street ..	..	ditto
Gupta, Jyotish Chandra ..	.. Record-keeper, Engineer's Office, E B R	.. 3, Kaylaghat Street ..	..	ditto
Gupta, Kalidas ..	.. Clerk, National City Bank of New York ..	.. 4, Clive Street ..	..	ditto
Gupta, Kunja Bihari ..	.. Analyst, Calcutta Corporation	.. S S Hogg Market ..	..	ditto
Gupta, Mritunjoy ..	.. Accounts Clerk, Arnhold & Co, Ld	.. 100, Clive Street ..	..	ditto
Gupta, N, BA ..	.. Assistant, Art Press	.. 20, British Indian Street	..	ditto
Gupta, Nagendra Nath	.. Assistant, Mackinnon, Mackenzie & Co	.. 16, Strand Road ..	..	ditto
Gupta, Nagendra Nath	.. Assistant Reporter, Secretary's Department, Calcutta Corporation	Municipal Office ..	..	ditto

Names.	Style or calling.	Residence or place of business.	Religion.
Gupta, Nagendra Nath ..	Clerk, C M E's Office, E I R	.. E I R House	Hindu
Gupta, Nandalal	Assistant, Excise Commissioner's Office, Bengal ..	.. Writers' Buildings	ditto
Gupta, Niranjan	Clerk, Calcutta Improvment Trust ..	.. 5, Clive Street	ditto
Gupta, Nripendra Kumar, BL ..	Assistant, N L Roy & Co	.. 7, Lyons Range	ditto
Gupta, Nripendra Nath	Clerk, Harrisons & Crosfield, Ld	.. 6, Church Lane	ditto
Gupta, Paresh Chandra	Stenographer, Bengal Telephone Corporation, Ld ..	.. 8, Hare Street	ditto
Gupta, Prabhat Kumar ..	Engineer, F & C Osler, Ld	.. 12, Old Court House Street ..	ditto
Gupta, Pramatha Nath	Assistant, Accountant-General's Office, Bengal ..	.. Treasury Buildings	ditto
Gupta, Priyanath	Examiner of Accounts, I T Office	.. 3, Government Place, West ..	ditto
Gupta, Purnendu, BA	Assistant, Bengal Secretariat, Police Department ..	.. Writers' Buildings	ditto
Gupta, Rabindra Nath	Lecturer, Government Commercial Institute ..	.. 11, Hastings Street	ditto
Gupta, Rakhal Chandra ..	Cashier, Dodge & Seymour, Ld	.. Tower House, Chowringhee Square ..	ditto
Gupta, Rangalal	Analyst, Calcutta Corporation	.. Municipal Office	ditto
Gupta, Santos Kumar, BA ..	Assistant, Bengal Secretariat, Revenue Department ..	.. Writers' Buildings	ditto
Gupta, Santos Kumar ..	Stenographer, Plummer Bros & Co	.. 5 & 6, Fancy Lane	ditto
Gupta, Satya Charan	Clerk, Agent's Office, E B R	.. 3, Kaylaghat Street	ditto
Gupta, Satya Ranjan ..	Clerk, C O P S Office, E I R	.. E I R House	ditto

Gupta, Satyendra Nath ..	.. Inspector, License Department, Calcutta Corporation	.. Municipal Office ..	..	ditto
Gupta, Shailaja Prasad ..	.. Assistant, Reed Ward & Co	.. 6, Royal Exchange Place	..	ditto
Gupta, Shishir Kumar, BA	.. Head Assistant, Income-tax Office	.. 3, Government Place, West	..	ditto
Gupta, Shyamsundar Lal	.. Clerk, C C M's Office, E I R	.. E I R House ..	..	ditto
Gupta, Sukumar, BA ..	.. Assistant, Agriculture and Industries Department, Bengal	.. Writers' Buildings ..	..	ditto
Gupta, Surendra Nath ..	.. Assistant, Accounts Department, Calcutta Corporation	.. Municipal Office ..	..	ditto
Gupta, Tarakdas ..	.. Salesman, C C Wakefield & Co, Ld	.. 7, Royal Exchange Place	..	ditto
Gupta, Taraprasanna, BA	.. Assistant, Office of the Controller of Currency ..	.. Treasury Buildings ..	..	ditto
Guzdar, N D ..	.. Head Clerk, Imperial Chemical Industries (India), Ld	.. 18, Strand Road ..	..	ditto

H

Hafiz, Mahomed Abdul, MA	.. Assistant, Bengal Secretariat, Irrigation Department	.. Writers' Buildings ..	..	Mahomedan
Hafiz, Mahomed Abdul ..	.. Assistant, Bengal Secretariat, Commerce Department	.. Writers' Buildings ..	..	ditto
Hait, Shantiram, BA ..	.. Assistant, Accountant-General's Office, Bengal ..	.. Treasury Buildings ..	..	Hindu
Haldar, Bangshidhar, BA	.. Inspector, License Department, Calcutta Corporation	.. Municipal Office ..	..	ditto
Haldar, Bankim Bihari ..	.. Clerk, Gillanders, Arbuthnot & Co	.. 8, Clive Street ..	..	ditto
Haldar, Bhajahari ..	.. Assistant, Office of the Controller of Currency ..	.. Treasury Buildings ..	..	ditto
Haldar, Manindra Nath ..	.. Head Draftsman, Engineer's Office, E B R ..	.. 3, Kaylaghat Street ..	..	ditto
Haldar, M Mazzamil Hossain	.. Estimator, Ex Engineer's Office, City Division, P W D	.. Writers' Buildings ..	..	Mahomedan

No.	Names.	Style or calling.	Residence or place of business.	Religion.
	Haldar, Monmohan ..	.. Assistant, Port Office, Calcutta	.. 15-1, Strand Road	Hindu
	Haldar, Navataru ..	.. Assistant, Central Stationery Office ..	.. 3, Church Lane	ditto
	Haldar, Nishikanta ..	.. Clerk, *Statesman*, Ld	.. Statesman House	ditto
	Haldar, Pradyot Kumar, BA	.. Assistant, Calcutta University	.. Senate House	ditto
	Haldar, Prafulla Chandra, MA	.. Assistant, Accountant-General's Office, Bengal ..	.. Treasury Buildings	ditto
	Haldar, Prasad Das ..	.. Inspector, Collection Department, Calcutta Corporation	.. Municipal Office	ditto
	Haldar, Sanat Kumar ..	.. Assistant, Income-tax Office	.. 3, Government Place, West ..	ditto
	Haldar, Satya Charan ..	.. 2nd Clerk, Health Office, Calcutta Corporation, Dist III	.. Hogg Street	ditto
	Haldar, Tarak Nath ..	.. Assistant, Brooke Bond (India), Ld	.. 2, Metcalfe Street	ditto
	Haldar, Upendra Krishna	.. Assistant, F W Heilgers & Co	.. 1-1, Clive Street	ditto
	Hamidulla, Ali Ahmad ..	.. Assistant, Bengal Secretariat, Accounts Department	.. Writers' Buildings	Mahomedan
	Hannan, Abdul ..	.. Assistant, Office of the I-G of Police	.. Writers' Buildings	ditto
	Hasan, A B Z ..	.. Crew Inspector, E B R	.. 3, Kaylaghat Street	ditto
	Hazra, Annada Charan ..	.. Assistant, Income-tax Office	.. 6, Esplanade, East	Hindu
	Hazra, Basanta Kumar ..	.. Assistant, Macneill & Co	.. 2, Fairlie Place	ditto
	Hazra, B B ..	.. Head Clerk, McGregor & Balfour, Ld	.. 11, Clive Street	ditto

Hazra, Dasarathi	Clerk, Calcutta Improvement Trust	..	5, Clive Street	ditto	
Hazra, Nabagopal, BA	Stenographer, Board of Revenue, Bengal ..	..	Writers' Buildings	ditto	
Hazra, Nanda Lal	Clerk, Secretary's Department, Port Commissioners' Office	..	Strand Road	ditto	
Hazra, Radhika Prasad ..	Clerk, Estate Supdt's Office, Port Commissioners ..	..	Strand Road	ditto	
Hazra, Shashadhar, B com ..	Assistant, Central Stationery Office	..	3, Church Lane	ditto	
Hazra, Surendra Nath	Head Clerk, Blackwood, Blackwood & Co ..	..	4, Lyons Range	ditto	
Hazra, Upendra Nath	Clerk, Jardine, Skinner & Co	..	4, Clive Row	ditto	
Homair, Shah Mahomed ..	Assistant Superintendent, C O S Office, E I R ..	..	E I R House	Mahomedan	
Hossain, Ahmed	Demonstrator, Presidency College	..	86-1, College Street	ditto	
Hossain, Afzal, BL	Assessing Inspector, Calcutta Corporation ..	..	Municipal Office	ditto	
Hossain, Khondkar Mokarram, BA ..	Assistant, Agriculture and Industries Department, Bengal	..	Writers' Buildings	ditto	
Hossain, M	Assistant, Mackinnon, Mackenzie & Co ..	..	8, Strand Road	ditto	
Hossain, Mahammad (Maulvi) ..	Assistant, Income-tax Office	..	6, Esplanade, East	ditto	
Hossain, Mahomed Sakhawat, BL ..	Assistant, Bengal Secretariat, Marine Department ..	..	Writers' Buildings	ditto	
Hossain, Mahomed Tafazzal (Maulvi), BA	Assistant, Bengal Secretariat, Police Department ..	..	Writers' Buildings	ditto	
Hossain, Nural (Maulvi)	Assistant, Legislative Department, Bengal ..	..	Council House	ditto	
Hossain, Quazi Akram, MA ..	Lecturer, Islamia College	..	8, Wellesley Street	ditto	
Hossain, Mudasser (Maulvi) ..	Assistant, Office of the Private Secy to H E the Governor of Bengal		Government House	ditto	

NO.	Names.	Style or calling.	Residence or place of business.	Religion.
	Hossain, Syed Akhtar, MA	Examiner of Accounts, Income-tax Office	1, Hare Street	Mahomedan
	Hossain, Tafazzal (Maulvi)	Assistant, Income-tax Office	6, Esplanade, East	ditto
	Hossain, Uz-Zaman	Assistant, Office of the Director of Industries, Bengal	40-1A, Free School Street	ditto
	Hukoo, Harihar Nath	Clerk, C O P S Office, E I R	E I R House	Hindu
	Huq, Abedul	Head Clerk, Income-tax Office	3, Government Place, West	Mahomedan
	Huq, Amjed Zahurul	Gallary Assistant, Victoria Memorial Hall	Victoria Memorial Hall	ditto
	Huq, Azmatul	Assessor, Income-tax Office	6, Esplanade, East	ditto
	Huq, Enamel (Maulvi)	Assistant, General Department, Calcutta Collectorate	3, Charnock Place	ditto
	Huq, Fazlul (Maulvi), MA	Lecturer, Islamia College	8, Wellesley Street	ditto
	Huq, Shamsul, MA	Lecturer, Islamia College	8, Wellesley Street	ditto
	Huq, Sheikh Nurul, BA	Assistant, Accountant-General's Office, Bengal	Treasury Buildings	ditto
	Huq, S S	Assistant, Mackinnon, Mackenzie & Co	8, Strand Road	ditto
	Huq, Syed Zaharul (Maulvi)	Assistant, Bengal Secretariat, L S-G Department	Writers' Buildings	ditto
	Huq, Zahurul	Secretary, Remington Rand Inc	3, Council House Street	ditto
	Ibrahim, Shaikh Mahammad, BSc	Lecturer, Calcutta Technical School	110, Surendra Nath Banerjee Street	Mahomedan
	Iqubal, Aftab, MA	Lecturer, Islamia College	8, Wellesley Street	ditto

Isaq, Mohamed (Maulvi)	Assistant, Bengal Secretariat Record Room ..	..	Writers' Buildings ..	.. ditto
Islam, Hedayetul (Maulvi), MSc ..	Laboratory Assistant, Islamia College	..	8, Wellesley Street ..	.. ditto
Iyer, Amenapettai Ramaswamy Subbaraman	Clerk, Office of the Controller of Army Factory Accounts ..		6, Esplanade, East ..	.. Hindu
Iyer, C R Subramamia ..	Stenographer, Houghton Butcher (Eastern), Ld ..		10, Hungerford Street ..	.. ditto
Iyer, Chillur Venkataswara ..	Clerk, Alliance Assurance Co, Ld	..	2, Hare Street ..	ditto
Iyer, Comal Rajagopal Krishnamurthi	Assistant, Andrew, Yule & Co, Ld.	..	8, Clive Row ..	.. ditto
Iyer, Ganapatty ..	Cashier, Texas Co (India), Ld	..	11, Esplanade East ..	.. ditto
Iyer, Ganjai Kondinsundaram Subramania.	Stenographer, Accounts Department, E B R ..	..	3, Kaylaghat Street ..	.. ditto
Iyer, K C S	Stenographer, W Leslie & Co	..	19, Chowringhee ..	.. ditto
Iyer, Katuputur, S	Clerk, National City Bank of New York ..	..	4, Clive Street ..	.. ditto
Iyer, K N	Accounts Clerk, Imperial Chemical Industries (India), Ld ..		18, Strand Road ..	.. ditto
Iyer, Krishnamurthi K	Stenographer, Imperial Chemical Industries (India), Ld ..		18, Strand Road ..	.. ditto
Iyer, M Krishnamurti	Assistant, Andrew, Yule & Co, Ld	..	8, Clive Row ..	.. ditto
Iyer, Muthuswamy Panchapakesa ..	Assistant, Andrew, Yule & Co, Ld	..	8, Clive Row ..	.. ditto
Iyer, Narayanswami	Audit Clerk, Thos Cook & Son, Ld	..	4, Dalhousie Square, East ..	ditto
Iyer, N K, BA	Assistant, Office of the Controller of Currency ..	..	Treasury Buildings ..	.. ditto

No.	Names.	Style or calling.	Residence or place of business.	Religion.
	Iyer, N Ramaswami ..	.. Assistant Accountant, Port Commissioners' Office ..	.. Strand Road	Hindu
	Iyer, N Sankara ..	.. Clerk, Ralli Brothers, Ld	.. 16, Hare Street	ditto
	Iyer, P A Sankara ..	.. Assistant, Andrew, Yule & Co, Ld	.. 8, Clive Row	ditto
	Iyer, P R U ..	.. Stenographer, Imperial Chemical Industries (Inda), Ld	.. 18, Strand Road	ditto
	Iyer, P Subramonia ..	.. Assistant, Martin & Co	.. 12, Mission Row	ditto
	Iyer P V P ..	.. Clerk, Burmah-Shell Co of India, Ld	.. Hongkong House	ditto
	Iyer, R A ..	.. Assistant, A-G's Office, Bengal	.. Treasury Buildings	ditto
	Iyer, Ramaswami ..	.. Assistant, Bengal Secretariat, Revenue Department ..	.. Writers' Buildings	ditto
	Iyer, Ram Krishna ..	.. Cashier and Accountant, Asiatic Society of Bengal ..	.. 1, Park Street	ditto
	Iyer, Singanellur Srinivas	.. Assistant, British Insulated Cables, Ld	.. 2, Waterloo Street	ditto
	Iyer, S Krishna ..	.. Assistant, Balmer, Lawrie & Co, Ld	.. 103, Clive Street	ditto
	Iyer, S Rama ..	.. Stenographer, C A O's Office, E I R ..	.. E I R House	ditto
	Iyer, Subramania Arunachala	.. Assistant, Andrew, Yule & Co, Ld	.. 8, Clive Row	ditto
	Iyer, T Adisesh, B COM ..	.. Accountant, E B R	.. 3, Kaylaghat Street	ditto
	Iyer, T V A ..	.. Head Reader, P S's Office, E I R	.. E I R House	ditto
	Iyer, Venkata Subramaniya	.. Head Clerk, Bengal Iron Co, Ld ..	.. 4, Lyons Range	ditto

Iyer, Venkatesara Subramaniya, BA	Clerk, Office of the Controller of Army Factory Accounts	..	6, Esplanade, East	ditto
Iyer, V Sundaram	Accounts Clerk, E B R	..	3, Kaylaghat Street	ditto
Iyer, V V	Stenographer, Mechl Department, E B R ..	..	3, Kaylaghat Street	ditto
J				
Jafer, G R	Assistant Manager, Adamjee Hajee Dawood & Co, Ld	..	4, Dalhousie Square, East ..	Mahomedan
Jagannathan, Rangaswami, MA ..	Assistant, Tata Iron & Steel Co, Ld	..	100, Clive Street	Hindu
Jahan, Md Mir, MA	Lecturer, Islamia College	..	8, Wellesley Street	Mahomedan
Jalil, Mahamad Abdul (Maulvi) ..	Assistant, Bengal Secretariat, P W D	..	Writers' Buildings	ditto
Jamsed, Mahomed	Surveyor and Estimator, Calcutta Corporation ..	..	Municipal Office	ditto
Jha, A L	Munshi, P & O Banking Corporation, Ld ..	..	1, Fairlie Place	Hindu
Joardar, A D	Assistant Inspector of Factories, Bengal ..	..	40-1A, Free School Street ..	ditto
Joardar, Mahbub Ali	Assistant, Bengal Secretariat, Finance Deptt ..	..	Writers' Buildings	Mahomedan
Joshi, Jameatram Chintamai ..	Sub-Accountant, National City Bank of New York ..	..	4, Clive Street	Hindu
Joshi, Krishna Rao	Examiner of Stores, Indian Stores Department (Inspection) ..	..	6, Esplanade, East	ditto
Jabbar, Abdul, MA, BL	Examiner of Accounts, I T Office ..	..	1, Hare Street	Mahomedan
K				
Kadir, Abdul (Maulvi), BA ..	Assistant, Office of the Controller of Currency ..	..	Treasury Buildings	Mahomedan
Kalyanpur, M B	Clerk, Burmah-Shell Co of India, Ld	..	Hongkong House	Hindu

No.	Names.	Style or calling.	Residence or place of business.	Religion.
	Kangali, Shaik ..	.. Assistant, Andrew, Yule, & Co, Ld	.. 8, Clive Row	Mahomedan
	Kanjilal, Dhirendra Nath, BA	.. Assistant, Accountant-General's Office, Bengal ..	.. Treasury Buildings	Hindu
	Kantak, Yeshwant Ramrao	.. Accountant, Zenith Life Assurance Co, Ld ..	.. Norton Buildings	ditto
	Kanthal, Bibhuti Bhusan, MA	.. Lecturer, Ripon College	.. 24, Harrison Road	ditto
	Kapoor, Durga Prasad ..	.. Assistant, Allahabad Bank, Ld	.. 6, Royal Exchange Place	ditto
	Kapoor, Narain Das ..	.. Assistant, Allahabad Bank, Ld	.. 6, Royal Exchange Place	ditto
	Kapoor, Sitaram ..	.. Clerk, Allahabad Bank, Ld	.. 6, Royal Exchange Place.. ..	ditto
	Kapoor, Shreekrishnadas	.. Clerk, Allahabad Bank, Ld	.. 6, Royal Exchange Place ..	ditto
	Kar, Bipin Bihari ..	.. Assistant Superintendent, Office of the Controller of Currency	Treasury Buildings	ditto
	Kar, Jogesh Chandra ..	.. Stenographer, Imperial Chemical Industries (India), Ld ..	18, Strand Road	ditto
	Kar, Krishna Charan ..	.. Assistant, Bengal Secretariat, Finance Department	.. Writers' Buildings	ditto
	Kar, Kulesh Chandra ..	.. Lecturer, Presidency College	.. 86-1, College Street	ditto
	Kar, Nalini Mohan ..	.. Cashier, Bengal Provincial Co-operative Bank, Ld	.. Writers' Buildings	ditto
	Kar, Narendra Nath, BA ..	.. Assistant, Accountant-General's Office, Bengal ..	.. Treasury Buildings	ditto
	Kar, Sunil Kumar, BA ..	.. Assistant, A-G's Office, Bengal	.. Treasury Buildings	ditto
	Karim, A S M ..	.. Assistant Master, Calcutta Madrassah	.. 19, Wellesley Square	Mahomedan

Karim, Bazlal (Maulvi), BA	Con Overseer, Calcutta Corporation, D E I	..	79, Cornwallis Street	..	ditto
Karkhanawala, Burjorji Maneckji, BA	Assistant, Tata Iron & Steel Co, Ld	..	100, Clive Street	..	Zoroastrian
Karmakar, Annada Ch	Clerk, Calcutta Improvement Trust	..	5, Clive Street	..	Hindu
Karmakar, Jogneshwar	Leveling Surveyor, Spl Officer's Department, Calcuta Corporation		Municipal Office	..	ditto
Karmakar, Prafulla Chandra	Engr Overseer, Calcutta Corporation, D E I	..	79, Cornwalis Street	..	ditto
Karmakar, Prahlad Chandra	Assistant Designer, Government School of Art	..	28, Chowringhee	..	ditto
Karmakar, Shibnath	Book-keeper, Landale and Clark, Ld	..	11, Clive Street	..	ditto
Karmakar, Suresh Chandra	Assistant Engineer, J C Banerjee, Ld	..	20, Strand Road	..	ditto
Kasem, Md Abul (Maulvi)	Assistant, Bengal Secretariat, L S-G Department	..	Writers' Buildings	..	Mahomedan
Kassim, Md Abul, BCOM	Examiner of Accounts, Income Tax Office	..	6, Esplanade, East	..	ditto
Katra, G Ram	Assistant, Bird & Co	..	1-1, Clive Street	..	Hindu
Khabiruddin Sarda Mahamad (Maulvi), BA	Assistant, Legislative Department, Bengal		Council House	..	Mahomedan
Khair, Maulvi Abul	Assistant, Office of the Director of Public Instruction, Bengal		Writers' Buildings	..	ditto
Khalid, Abu Osman, MA	Lecturer, Calcutta University	..	Senate House	..	ditto
Khalil, Mahammad, BA, BT	Assistant Head Master, Calcutta Madrassah	..	19, Wellesley Square	..	ditto
Khaliq, Abdul	Lecturer, Presidency College	..	86-1, College Street	..	ditto
Khan, Abani Nath, MA	Assistant, Accountant-General's Office, Bengal	..	Treasury Buildings	..	Hindu
Khan, Abdul Bari (Maulvi)	Assistant, Bengal Secretariat, Political Department	..	Writers' Buildings	..	Mahomedan

No.	Names.	Style or calling.	Residence or place of business.	Religion.
	Khan, Abdul Karim (Maulvi) ..	Assistant, Office of the Director of Public Health, Bengal ..	Writers' Buildings	Mahomedan
	Khan, Abdur Rahman (Maulvi) ..	Assistant, Bengal Secretariat, L S-G Departent	Writers' Buildings	ditto
	Khan, Amarnath	Assistant, Accountant-General's Office, Bengal	Treasury Buildings	Hindu
	Khan, Asraf Ali (Maulvi) ..	Assistant, Office of the Director of Public Health, Bengal ..	Writers' Buildings	Mahomedan
	Khan, Benode Bihari	Assistant, Mackinnon, Mackenzie & Co	16, Strand Road	Hindu
	Khan, Bhupendra Nath ..	Assistant, Grahams Trading Co (India), Ld	6, Lyons Range	ditto
	Khan, B K	Clerk, Burmah-Shell Co of India, Ld	Hongkong House	ditto
	Khan, Mahomed Ayub (Maulvi), BA ..	Assistant, Bengal Secretariat, Political Department (Jails Branch)	Writers' Buildings	Mahomedan
	Khan, Md I	Chief Maulvi, Imperial Record Department	3, Government Place, West ..	ditto
	Khan, Musaheb Ali, MA ..	Inspector, License Department, Calcutta Corporation ..	Municipal Office	ditto
	Khan, Nani Gopal	Head Clerk, Traffic Department, E B R	3, Kaylaghat Street	Hindu
	Khan, Nasir Ali	Lecturer, Calcutta University	Senate House	Mahomedan
	Khan, Samsam-Uddin (Maulvi), BA ..	Assistant, Bengal Secretariat, Political Department (Jails Branch)	Writers' Buildings	ditto
	Khan, Samsuddin Ahmed, MA ..	Inspector of Schools, Calcutta Corporation	Municipal Office	ditto
	Khan, Serajul Islam, MA ..	Assessor of Income Tax	6, Esplanade, East	ditto
	Khan, Shamser Ali (Maulvi), BL ..	Assistant, Bengal Secretariat, Appointment Department ..	Writers' Buildings	ditto
	Khan, Wahedun Nabi, MA, BT ..	Assistant Master, Calcutta Madrassah	19, Wellesley Square	ditto

Khanna, Bhairon Prasad ..	Clerk, Allahabad Bank, Ld ..	.. 6, Royal Exchange Place..	..	Hindu
Khare, Nawab Bahadur ..	Clerk. Allahabad Bank, Ld ..	.. 6, Royal Exchange Place ..	..	ditto
Khasnabis, Ramesh Chandra ..	Surveyor and Valuer, Land Acquisition Office ..	.. 5, Bankshall Street ..	..	ditto
Khawja, Nasiruddin	Sec Sub-Head, C C M's Office, E I R	.. E I R House ..	..	Mahomedan
Khera, Beli Ram	S D O, Technical, C R E's Office, P & A District ..	.. Fort William ..	..	Hindu
Khizir, Mahomed Ghulam (Maulvi) ..	Assistant, Public Health Department, Bengal ..	.. Writers' Buildings ..	..	Mahomedan
Khondkar, Fazlur Rahman, B COM ..	Examiner of Accounts, Income Tax Office ..	.. 6, Esplanade, East ..	..	ditto
Khondkar, Mahomed Hosainuddin ..	Head Clerk, Office of the Assistant Director of Public Instruction for Muhammadan Education, Bengal.	Writers' Buildings ..	..	ditto
Khondkar, Samsuddin ..	Assistant, Bengal Secretariat, Revenue Department ..	Writers' Buildings ..	..	ditto
Kibria, Gholam (Maulvi), BA, BT ..	Head Master, Calcutta Model School ..	.. 8, European Asylum Lane ..		ditto
Kichlu, L P	Assistant, 2nd grade, Imperial Bank of India ..	Strand Road ..	..	Hindu
Koar, Jitendra Nath	Assistant, McLeod & Co	.. 28, Dalhousie Square ..	..	ditto
Konar, Jatindra Nath	Office Supdt, Traffic Department, E B R ..	.. 3, Kaylaghat Street ..	..	ditto
Konar, Paresh Nath	Accounts Clerk, Calcutta Corporation, Distt II ..	.. 22, Mirzapore Street ..	..	ditto
Krishna, J V	Assistant, W H Targett & Co	.. 1, Commercial Buildings	..	ditto
Krishnaswami, Venadhirajopuran Sambasiva-Iyer, BA	Stenographer, Patent Office	.. 1, Council House Street ..	..	ditto
Kshettry, Shyam Lal	Bill Examiner, Imperial Bank of India ..	.. Strand Road ..	..	ditto
Kulkarni, P P	Assistant Electrical Egineer, E I R	.. E I R House ..	..	ditto

No.	Names.	Style or calling.	Residence or place of business.	Religion.
	Kumar, Atal Krishna	Bill Collector, Bengal Telephone Corporation, Ld	8, Hare Street	Hindu
	Kumar, Bhusan Chandra	Clerk, Jardine Skinner & Co	4, Clive Row	ditto
	Kumar, Nishikanta	Head Estimator, C R E's Office, P & A District	Fort William	Brahmo
	Kumar, Tinkari	Clerk, Shaw, Wallace & Co	4, Bankshall Street	Hindu
	Kundu, Ashutos	Assistant, Andrew, Yule & Co, Ld	8, Clive Row	ditto
	Kundu, Bhupendra Nath	Clerk, Place, Siddons & Gough	6, Lyons Range	ditto
	Kundu, Dhirendra Nath	Assistant, Bengal Secretariat, L S-G Department	Writers' Buildings	ditto
	Kundu, Fakir Chandra	Ch Ledger Clerk, Thos Cook & Son, Ld	4, Dalhousie Square	ditto
	Kundu, J D, BA	Accountant, Britannia Biscuit Co, Ld	Stephen House	ditto
	Kundu, Manik Chandra	Examiner of Stores, Indian Stores Department (Inspection)	6, Esplanade, East	ditto
	Kundu, M C	Clerk, Office of the Chief Mining Engineer, Railway Board	1, Council House Street	ditto
	Kundu, Narendra Mohan, BA	Inspector, Sir Stuart Hogg Market	Sir Stuart Hogg Market	ditto
	Kundu, Nripendra Nath	Assistant, Price, Waterhouse, Peat & Co	B-4, Clive Buildings	ditto
	Kundu, Prafulla Kumar, B COM, GDA	Examiner of Accounts, I T Office	6, Esplanade, East	ditto
	Kundu, Pramatha Nath	Assistant, Bengal Secretariat, Accounts Department	Writers' Buildings	ditto
	Kundu, Rajendra Nath	Assistant, James Finlay & Co, Ld	1, Clive Stret	ditto

Kundu, Ramsaran	..	Assistant, Calcutta University	..	Senate House	.. ditto
Kundu, Sasthidas	..	Assistant, Central Stationery Office	..	3, Church Lane	.. ditto
Kundu, Satya Charan	..	Assistant, Income-tax Office	..	Imperial Secretariat Buildings	.. ditto
Kushiari, Rohini Kumar	..	Assistant, Bengal Secretariat Record Room	..	Writers' Buildings	.. ditto

L

Laha, Amulya Ch	..	Assistant, Bird & Co	..	1-1, Clive Street	.. Hindu
Laha, Charu Chandra	..	Assistant, Bird & Co	..	1-1, Clive Street	.. ditto
Laha, H K	..	Head Clerk, Java Sea & Fire Insurance Co, Ld	..	4, Lyons Range	.. ditto
Laha, Kanai Lal	..	Computor, Government of India Press	..	8, Hastings Street	.. ditto
Laha, Krishna Chandra	..	Assistant, Bird & Co	..	1-1, Clive Street	.. ditto
Laha, Lalit Mohan	..	Surveyor & Valuer, Land Acquisition Office	..	5, Bankshall Street	.. ditto
Laha, Nagendra Kumar	..	Cashier, Royal Calcutta Turf Club	..	11, Russell Street	.. ditto
Laha, Nilmani	..	Cashier (Collection), Port Commissioners' Office	..	Strand Road	.. ditto
Laha, Prafulla Kumar, BA	..	Assistant, Bengal Secretariat, Accounts Department	..	Writers' Buildings	.. ditto
Laha, Radhika Prasad	..	Clerk, Shaw, Wallace & Co	..	4, Bankshall Street	.. ditto
Laha, Rasaraj	..	Head Clerk, E Meyer & Co (1926), Ld	..	2, Clive Ghat Stret	.. ditto
Laha, Surendra Nath	..	Clerk, Shaw, Wallace & Co	..	4, Bankshall Street	.. ditto
Lahiri, Baidyanath	..	Assistant, Lovelock & Lewes	..	4, Lyons Range	.. ditto

No.	Names.	Style or calling	Residence or place of business.	Religion.
	Lahiri, Chandra Lochan, BA	Clerk, Lloyds Bank, Ld	101-1, Clive Street	Hindu
	Lahiri, Chintamani	Assistant, Mackinnon, Mackenzie & Co	16, Strand Road	ditto
	Lahiri, Chunilal	Superintendent, Unique Assurance Co, Ld	10, Canning Street	ditto
	Lahiri, Dhaneshwar	Assistant, Lovelock & Lewes	4, Lyons Range	ditto
	Lahiri, Dhirendra Nath	Superintendent, C-C Dept, Central Bank of India, Ld	100, Clive Street	ditto
	Lahiri, Dinesh Chandra	Clerk, Office of the Superintending Engineer, S Circle, P W D	3, Government Place, West	ditto
	Lahiri, Girish Chandra	Assistant, Bird & Co	1-1, Clive Street	ditto
	Lahiri, Harendra Nath	Reader, Govt. of India Press	8, Hastings Stret	ditto
	Lahiri, Harinath	Clerk, Agent's Office, E I R	E I R House	ditto
	Lahiri, J C	Assistant, Guest, Keen, Williams, Ld	7, Couincil House Street	ditto
	Lahiri, Manmatha Nath	Clerk, Turner, Morrison & Co, Ld	6, Lyons Range	ditto
	Lahiri, Mukunda Murari	Audit Clerk, E B R	3, Kaylaghat Street	ditto
	Lahiri, Nirmalya Kumar	Clerk, C O S Office, E I R	E I R House	ditto
	Lahiri, Shyamapada	Assistant, Accountant-General's Office, Bengal	Treasury Buildings	ditto
	Lahiri, Tarak Brahma	Stenographer, Imperial Chemical Industries (India), Ld	18, Strand Road	ditto
	Lahiri, Upendra Nath	Assistant, Mackinnon, Mackenzie & Co	16, Strand Road	ditto
	Lahiri Chaudhuri, Nripendra Kanta	Assistant, Excise Commissioner's Office, Bengal	Writers' Buildings	ditto

Laik, Rakhahari	Assistant, Macneill & Co	2, Fairlie Place	ditto
Lal, Anokhey	Clerk, C A O's Office, E I R	E I R House	ditto
Lal, Mahabbat	Clerk, Allahabad Bank, Ld	6, Royal Exchange Place	ditto
Lateef, Abdul (Maulvi)	Assistant Reader, Bengal Library	Writers' Buildings	Mahomedan
Law, Suresh Chandra	Head Clerk & Cashier, British Insulated Cables, Ld	2, Waterloo Street	Hindu
Lodh, Nagendra Kumar, MA	Teacher, Bangabasi College School	25-1, Scott Lane	ditto

M

Madan, Behram Shapurji	Accountant, Royal Exchange Assurance	1 & 2, Old Court House Street	Zoroastrian
Madgavkar, Keshav Dinanath	Accountant, Scindia Steam Navigation Co, Ld	100, Clve Street	ditto
Mahmud, Hafiz Syed Mahammad	2nd Maulvi, Calcutta Madrassah	19, Wellesley Square	Mahomedan
Mahomed, Ghulam	Clerk, Office of the Controller of Army Factory Accounts	6, Esplanade, East	ditto
Mohamed, Nabi, MSC	Assistant, Bengal Secretariat, Finance Department	Writers' Buildings	ditto
Mahomed, Nisar	Clerk, C A O's Office, E I R	E I R House	ditto
Mahomed, Sahiuddin (Maulvi), BA	Assistant, Bengal Secretariat, Marine Department	Writers' Buildings	ditto
Maiti, Bibhutibhusan, BSC	Articled Clerk, U U Chaudhri & Co	12-1, Old Post Office Street	Hindu
Maitra, Asit Chandra	Assistant, Brooke Bond (India), Ld	2, Metcalfe Street	ditto
Maitra, Bhupendra Nath	Demonstrator, Presidency College	86-1, College Street	ditto

No.	Name	Style or calling.	Residence or place of business.	Religion.
	Maitra, Haripada ..	.. Accountant, Improvement Trust Tribunal ..	.. 6, Hastings Street	Hindu
	Maitra, Kalipada ..	.. Cashier, Williamson, Magor & Co	.. 4, Mangoe Lane	ditto
	Maitra, Kalipada ..	.. Stenographer, Bengal Secretariat, Finance Department	.. Writers' Buildings	ditto
	Maitra, Manmatha Nath ..	.. Assistant, Income-tax Office	.. 3, Government Place, West ..	ditto
	Maitra, Phanindra Lal ..	.. Assistant, Accountant-General's Office, Bengal ..	.. Treasury Buildings	ditto
	Maitra, Prafulla Ch, BSC, GDA	.. Examiner of Accounts, Income-tax Office ..	.. 3, Government Place, West ..	ditto
	Maitra, Pramatha Nath ..	.. Assistant Accountant, Begg Dunlop & Co, Ld ..	.. 2, Hare Street	ditto
	Maitra, Satyendra Nath ..	.. Assistant, Hoare Miller & Co, Ld ..	.. 5, Fairlie Place	ditto
	Maitra, Shachindra Nath	.. Assistant, Shaw, Wallace & Co	.. 4, Bankshall Street	ditto
	Maitra, Shivaram ..	.. Assistant, Andrew Yule & Co, Ld ..	.. 8, Clive Row	ditto
	Maitra, Subodh Chandra	.. Assistant, Martin & Co	.. 12, Mission Road	ditto
	Maitra, Surendra Nath ..	.. Clerk, Gillanders, Arbuthnot & Co	.. 8, Clive Street	ditto
	Majid, Abdul, MA ..	.. Lecturer, Islamia College	.. 8, Wellesley Street	Mahomedan
	Majid, Abdul, BA, BT ..	.. Teacher, Calcutta Madrassah	.. 19, Wellesley Square	ditto
	Majumdar, Anukul Chandra	.. Stenographer, *Statesman*, Ld	.. Statesman House	Hindu
	Majumdar, Ashutos ..	.. Assistant, Accounts Deptt, Calcutta Corporation ..	.. Municipal Office	ditto
	Majumdar, Aswini Kumar	.. Assistant, Hindusthan Co-operative Insurance Society, Ld	.. Hindusthan Buildings	ditto

Majumdar, Bijaya K ..	.. Assistant, Octavius Steel & Co, Ld	.. 14, Old Court House Street ..	ditto
Majumdar, Binaya Bhusan, BA ..	Clerk, Assessor's Department, Calcutta Corporation	.. Municipal Office	ditto
Majumdar, Bistupada ..	.. Clerk, P D O, Imperial Bank of India ..	.. 8, Council House Street	ditto
Majumdar, D ..	.. Accountant, Spence's Hotel, Ld	.. 4, Wellesley Place	ditto
Majumdar, Dasharathi ..	.. Assistant, Accountant-General's Office, Bengal ..	.. Treasury Buildings	ditto
Majumdar, D N ..	.. Estate Surveyor, Port Commissioners' Office ..	.. Strand Road	ditto
Majumdar, Girish Chandra, BA ..	Teacher, City School	.. 13, Mirzapur Street	Brahmo
Majumdar, Haraprasad ..	Head Clerk, India Provident Co, Ld	.. 10, Clive Row	Hindu
Majumdar, Jahar Lal ..	.. Assistant, Bengal Secretariat Record Room ..	.. Writers' Buildings	ditto
Majumdar, Kanti Chandra, BA ..	Assistant, Central Stationery Office	.. 3, Church Lane	ditto
Majumdar, Kashipati ..	.. Accounts Clerk, E B R	.. 3, Kaylaghat Street	ditto
Majumdar, Kshitish Chandra ..	Stenographer, Union Insurance Society of Canton, Ld	.. 8, Clive Street	ditto
Majumdar, Manindra Nath ..	Clerk, Harrisons & Crosfield, Ld	.. 6, Church Lane	ditto
Majumdar, Manmatha Nath, BSc ..	Assistant, Accountant-General's Office, Bengal ..	.. Treasury Buildings	ditto
Majumdar, Matindra Ranjan ..	Assessing Inspector, Calcutta Corporation ..	.. Municipal Office	ditto
Majumdar, Nalini Nath ..	.. Surveyor, Calcutta Improvement Trust	.. 5, Clive Street	ditto
Majumdar, Narayan Chandra, BA ..	Teacher, Bangabasi College School	.. 25-1, Scott Lane	ditto
Majumdar, Niranjan ..	.. Accountant, Taylor's Gramophone Saloon ..	.. 15-4, Chowringhee	ditto

No.	Names.	Style or calling.	Residence or place of business.	Religion.
	Majumdar, Nirmal Kanta, MA	Lecturer, Bethune College	181, Cornwallis Street	Hindu
	Majumdar, Nishi Kanta	Accountant, Institution of Engineers (India)	6, Gokhale Road	ditto
	Majumdar, Nripati Nath, BA	Assistant, Accounts Department, Calcutta Corporation	Municipal Office	ditto
	Majumdar, Pramatha Nath	Assistant, Sun Life of Canada	12, Dalhousie Square, East	ditto
	Majumdar, Rabindra Mohan	Assistant, Accountant-General's Office, Bengal	Treasury Buildings	ditto
	Majumdar, Ranajit Kumar	Head Clerk, Calcutta Improvement Trust	5, Clive Street	ditto
	Majumdar, Santos Kumar, BE, CE	Assistant, Holmes Wilson & Co, Ld	Norton Buildings	ditto
	Majumdar, Satya Charan	Clerk, Place, Siddons & Gough	6, Lyons Range	ditto
	Majumdar, S C	Clerk, C E S C, Ld	Victoria House	ditto
	Majumdar, S C	Clerk, Office of the Chief Mining Engineer, Railway Board	1, Council House Street	ditto
	Majumdar, S C, BA, GDA	Examiner of Accounts, I T Office	6, Esplanade, East	ditto
	Majumdar, Subodh Kumar, MSC	Professor, Ripon College	24, Harrison Road	ditto
	Majumdar, Surabandhu, MA	Assistant, Commercial Intelligence Department, India	1, Council House Street	ditto
	Majumdar, Surendra Nath	Assistant, Office of the Director of Public Instruction, Bengal	Writers' Buildings	ditto
	Majumdar, Suresh Chandra	Assistant, Office of the Inspector-General of Prisons, Bengal	Writers' Buildings	ditto
	Majumdar, Suresh Chandra	Assistant, Income Tax Office	6, Esplanade, East	ditto
	Majumdar, Upendra Nath	Surveyor & Estimator, Calcutta Corporation	Municipal Office	ditto

Malakar, Loke Nath ..	.. Head Draftsman, Deputy Conservator's Department, Port Commissioners' Office	Strand Road ..	..	ditto
Malakar, Umakanta ..	.. Overseer, City Division, P W D	.. Writers' Buildings ..	..	ditto
Malaviya, Mahadeo Prasad ..	Assistant, Allahabad Bank of India, Ld ..	.. 6, Royal Exchange Place ..	..	ditto
Malhotra, M L ..	.. Clerk, Agent's office, E I R	.. E I R House ..	..	ditto
Malkani, Hassomal Udharam ..	Assistant, British Insulated Cables, Ld ..	.. 2, Waterloo Street ..	..	ditto
Mallik, Akshaya Kumar ..	.. Bill Clerk, Geo Henderson & Co, Ld	.. 101-1, Clive Street ..	..	ditto
Mallik, A P ..	.. Deputy Accountant, Calcutta Mint	.. 47, Strand Road ..	..	ditto
Mallik, Bholanath ..	.. Clerk, Lloyds Bank, Ld	.. 101-1, Clive Street ..	..	ditto
Mallik, Bijaya Madhab ..	.. Assistant, Kettlewell, Bullen & Co, Ld	.. 21, Strand Road ..	..	ditto
Mallik, Binode Bihari ..	.. Assistant, Accountant-General's Office, Bengal ..	.. Treasury Buildings ..	..	ditto
Mallik, Birendra Nath ..	.. Assistant, Martin & Co	.. 12, Mission Row ..	..	ditto
Mallik, Ganendra Nath ..	.. Assistant, Babcock and Wilcox, Ld	.. 4, Bankshall Street ..	..	ditto
Mallik, Gopinath ..	.. Assistant, Lionel Edwards, Ld	.. D-1, Clive Buildings ..	..	ditto
Mallik, Haridas ..	.. Clerk, Ralli Brothers, Ld	.. 16, Hare Street ..	..	ditto
Mallik, Harisadhan ..	.. Assistant, Mackinnon, Mackenzie & Co	.. 16, Strand Road ..	..	ditto
Mallik, Hiralal ..	.. Assistant, Accountant-General's Office, Bengal ..	.. Treasury Buildings ..	..	ditto
Mallik, I B ..	.. Clerk, Calcutta Mint	.. 47, Strand Road ..	..	ditto
Mallik, Janaki Nath ..	.. Book-keeper, Sinclair Murray & Co, Ld	.. 6, Royal Exchange Place ..		ditto

No.	Names.	Style or calling.	Residence or place of business.	Religion.
	Mallik, Jayprakash ..	.. Clerk, Cash Department, Imperial Bank of India ..	.. Strand Road	.. Hindu
	Mallik, Jiban Krishna ..	.. Clerk, Ralli Brothers, Ld	.. 16, Hare Street ..	.. ditto
	Mallik, Jitendra Nath ..	.. Cashier, Worthington-Simpson, Ld	.. 10, Clive Street ..	.. ditto
	Mallik, Jnanranjan ..	.. Clerk, Calcutta Improvement Trust	.. 5, Clive Street ..	.. ditto
	Mallik, Jogendra Narayan	.. Clerk, Agent's Office, E B R	.. 3, Kaylaghat Street ..	.. ditto
	Mallik, Jyotish Chandra, BA	.. Game Supervisor, Scottish Church College ..	.. 4, Cornwallis Square ..	.. Christian
	Mallik, Karuna Sindhu ..	.. Assistant, Martin & Co	.. 12, Mission Row ..	.. Hindu
	Mallik, Mahar Rahaman ..	.. Assistant, Accountant-General Office, Bengal ..	.. Treasury Buildings ..	.. Mahomedan
	Mallik, Manmatha Mohan	.. Clerk, Birkmyre Bros	.. 6, Clive Row ..	.. Hindu
	Mallik, Murari Mohan ..	.. Clerk, Engineer's Office, E B R	.. 3, Kaylaghat Street ..	.. ditto
	Mallik, Nagendra Nath ..	.. Assistant Accountant, Bengal Telephone Corporation, Ld	.. 8, Hare Street ..	.. ditto
	Mallik, Nalin Krishna ..	.. Clerk, Agent's Office, E B R	.. 3, Kaylaghat Street ..	.. ditto
	Mallik, Nitaichand ..	.. Clerk, I G N & Ry Co, Ld	.. 4, Fairlie Place ..	.. ditto
	Mallik, N M	.. Shipping Clerk, Govt Shipping Office	.. 15-1, Strand Road ..	.. ditto
	Mallik, Nritya Gopal ..	.. Assistant, Nestle and Anglo-Swiss Condensed Milk (Export) Co, Ld	9-A, Clive Street ..	.. ditto
	Mallik, Paresh Nath ..	.. Assistant Cashier, Place, Siddons & Gough ..	.. 6, Lyons Range ..	.. ditto
	Mallik, P C ..	.. Clerk, Associated Electrical Industries (India), Ld ..	A-3, Clive Buildings ..	.. ditto

Mallik, P K	.. Assistant, P & O Banking Corporation, Ld	.. ..	1, Fairlie Place	ditto
Mallik, Prabodh Kumar, B Sc	Assistant, Accountant-General's Office, Bengal	.. ..	Treasury Buildings	ditto
Mallik, Prafulla Kumar ..	.. Assistant, Babcock & Wilcox, Ld	.. ..	.. 4, Bankshall Street	ditto
Mallik, Purna Chandra ..	.. Assistant, Lovelock & Lewes	.. ..	.. 4, Lyons Range	ditto
Mallik, Purna Chandra ..	.. Assistant, Controller's Office, Calcutta University	.. ..	Senate House	ditto
Mallik, Raja Ram ..	.. Clerk, I G N & Ry Co, Ld ..	.. ..	.. 4, Fairlie Place	ditto
Mallik, Satkari ..	.. Head Clerk, Mechanical Department, E B R	.. ..	3, Kaylaghat Street	ditto
Mallik, Satya Charan ..	.. Accountant, Northern Assurance Co, Ld	.. ..	7, Hare Street	ditto
Mallik, Sudhindra Nath ..	.. Clerk, Army Factory Accounts	.. ..	.. 6, Esplanade, East	ditto
Mallik, Surendra Kumar ..	.. Chief Clerk and Cashier, Norwich Union Fire Insurance Society, Ld		8, Old Court House Street ..	ditto
Mallik, Uddhab Chandra	.. Assistant, Accountant-General's Office, Bengal	.. ..	Treasury Buildings	ditto
Mandal, Abdul Karim (Maulvi), MA ..	Lecturer, Islamia College ..	..	.. 8, Wellesley Street	Mahomedan
Mandal, A P ..	.. Clerk, C O S Office, E I R ..	.. ..	.. E I R House	Hindu
Mandal, Ashutos, BA ..	.. Clerk, Surveyor's Department, Calcutta Corporation		.. Municipal Office	ditto
Mandal, Balai Lal	.. Assistant, Lionel Edwards, Ld ..	..	.. D-1, Clive Buildings	ditto
Mandal, Dharanidhar ..	.. Clerk, Shaw, Wallace & Co ..	.. ..	.. 4, Bankshall Street	ditto
Mandal, Guruprasad, MA	.. Assistant, Accountant-General's Office, Bengal	..	.. Treasury Buildings	ditto
Mandal, Nishikanta, BA	.. Inspector, Collection Department, Calcutta Corporation		.. Municipal Office	ditto

No.	Names.	Style or calling.	Residence or place of business.	Religion.
	Mandal, Nityananda, BA	Assistant, Accountant-General's Office, Bengal	Treasury Buildings	Hindu
	Mandal, N N	Assistant, Oriental Govt Security Life Assurance Co, Ld	2, Clive Row	ditto
	Mandal, Panchanan	Assistant Headmaster, Mitra Institution	55, Harrison Road	ditto
	Mandal, Prasad Gobinda	Assistant, Bengal Secretariat, Irrigation Department	Writers' Buildings	ditto
	Mandal, Priya Nath, BA	Assistant, Commercial Intelligence Deptt, India	1, Council House Street	ditto
	Mandal, Radhagobinda	Surveyor, Calcutta Improvement Trust	5, Clive Street	ditto
	Mandal, Radhakanta	Clerk, Calcutta Stock Exchange Association, Ld	7, Lyons Range	ditto
	Mandal, Sharat Chandra	Reader, Govt of India Press	8, Hastings Street	ditto
	Mandanna, Kodandera Ganpathy	S A Superintendent, Drawing Branch, Surveyor-General's Office	13, Wood Street	ditto
	Mani, Harihar Subra	Cashier, Roneo, Ld	9, Clive Street	ditto
	Manjhi, Anukul Chandra	Assistant Superintendent Accounts Office, E B R	3, Kaylaghat Street	ditto
	Manjhi, Jitendra Nath	Clerk, C E's Office, E I R	E I R House	ditto
	Manna, Batakrishna	Supervisor, Drainage, Calcutta Corporation	Municipal Office	ditto
	Manna, Chintamani	Assistant Teacher, Government School of Art	28, Chowringhee	ditto
	Manna, Pramatha Nath	Clerk, Chartered Bank of India, Australia and China	1-1, Clive Street	ditto
	Mannan, Abdul, MA	Lecturer, Islamia College	8, Wellesley Street	Mahomedan
	Mariadas, Rajoo	Draftsman (Drawing), Survey of India	13, Wood Street	Christian

Marick, Romendra Nath ..	.. Audit Clerk, E B R	.. 3, Kaylaghat Street ..	..	Hindu
Maschatak, Dhirendra Nath	.. Assistant, Begg, Dunlop & Co, Ld	.. 2, Hare Street ..	..	ditto
Master, Nariman Fakirji ..	.. Accountant, Prudential Assurance Co, Ld ..	.. Clive Buildings ..	..	Zoroastrian.
Masud, Mahomed ..	.. Assistant, Bengal Secretariat, Revenue Department	.. Writers' Buildings ..	..	Mahomedan
Matilal, Baidyanath ..	.. Clerk, Lloyds Bank, Ld	.. 101-1, Clive Street ..	..	Hindu
Matilal, Bhudhar Ch ..	.. Typist, Hindusthan Co-operative Insurance Society, Ld	.. Hindusthan Buildings ..	..	ditto
Matthai, Parekh Oman ..	.. Head Clerk, Asiatic Society of Bengal	.. 1, Park Street ..	..	Christian
Maulik. Atul Chandra ..	.. S A Superintendent, Drawing Office, Survey of India..	.. 13, Wood Street ..	..	Hindu
Maulik, Sudhindra Chandra	.. Assistant, Eastern Bank, Ld	.. 3, Clive Street ..	..	ditto
Mehra, Badri Prasad	.. Clerk, Allahabad Bank, Ld	.. 6, Royal Exchange Place..	..	ditto
Mehra Dwarka Prasad ..	.. Clerk, Allahabad Bank, Ld	.. 6, Royal Exchange Place..	..	ditto
Mehra, Har Narayan (No. 1)	.. Clerk, Allahabad Bank, Ld	.. 6, Royal Exchange Place	..	ditto
Mehra, Jagat Narayan Lal	.. Clerk, Allahabad Bank, Ld	.. 6, Royal Exchange Place..	..	ditto
Mehra, Shyam Sundar ..	.. Clerk, Allahabad Bank, Ld	.. 6, Royal Exchange Place..	..	ditto
Mehrotra, Sreenarayan ..	.. Clerk, Allahabad Bank, Ld	.. 6, Royal Exchange Place..	..	ditto
Mehta, S S ..	.. Assistant, Imperial Chemical Industries (India), Ld ..	.. 18, Strand Road ..	..	Zoroastrian
Menon, A G ..	.. Assistant, Guest, Keen, Williams, Ld ..	.. 7, Council House Street ..	..	ditto
Meyer, Md Bux ..	.. General Manager, Meyer & Co	.. 6-3, Lindsay Street ..	..	Mahomedan

No.	Names.	Style or calling.	Residence or place of business.	Religion.
	Miah, A R ..	.. Assistant, Mackinnon, Mackenzie & Co	.. 8, Strand Road	Mahomedan
	Miah, Abdur Rob, MA ..	.. Assistant, Office of the I-G of Police	.. Writers' Buildings	ditto
	Miah, Md Abdur Rashid, BA	.. Assistant, Accountant-General's Office, Bengal ..	.. Treasury Buildings	ditto
	Miah, Torabali, MA ..	.. Assistant, Accountant-General's Office, Bengal ..	.. Treasury Buildings	ditto
	Mirza, Framros M, B COM	.. Assisant, S B Billimoria & Co	.. 100, Clive Street	Zoroastrian
	Mirza, Mahomed Wasi ..	.. Reader, P S Office, E I R	.. E I R House	Mahomedan
	Misra, Abinash Chandra ..	.. Clerk, Engineer's Office, E B R	.. 3, Kaylaghat Street	Hindu
	Misra, Pepin Bihari ..	.. Assistant, Mackinnon, Mackenzie & Co	.. 16, Strand Road	ditto
	Misra, Haladhar ..	.. Clerk, Macmillan & Co, Ld	.. 294, Bowbazar Street	ditto
	Misra, Nanda Kishore ..	.. Clerk, C C M's Office, E I R	.. E I R House	ditto
	Misra, Pramatha Nath, BA	.. Assistant,, Surgeon-General's Office, Bengal ..	.. Writers' Buildings	ditto
	Misra, Shew Mangal ..	.. Clerk, C A O's Office, E I R	.. E I R House	ditto
	Misra, Surendra Nath ..	.. Clerk, Surveyor-General's Office	.. 13, Wood Street	ditto
	Mitra, Adhish Chandra, BA	.. Assistant, Office of the Controller of Currency ..	.. Treasury Buildings	ditto
	Mitra, Akshaya Kumar ..	.. Assistant, Octavius Steel & Co, Ld	.. 14, Old Court House Street ..	ditto
	Mitra, Akshaya Kumar, BA	.. Reader, Government of India Press	.. 8, Hastings Street	ditto
	Mitra, Amar Krishna ..	.. Assistant, J Thomas & Co	.. 8, Mission Row	ditto

Mitra, Ambica Charan	Assistant, Andrew, Yule & Co, Ld	8, Clive Row	ditto
Mitra, Amulya Chandra, BA ..	Accounts Clerk, E B R	3, Kaylaghat Street	ditto
Mitra, Anath Nath, BA	Clerk, Office of the Controller of Army Factory Accounts ..	6, Esplanade, East	ditto
Mitra, Anath Nath	Assistant, F W Heilgers & Co	1-1, Clive Street	ditto
Mitra, Anil Ch	Assistant, Grahams Trading Co (India), Ld	6, Lyons Range	ditto
Mitra, Anil Chandra	Stenographer, Dodge & Seymour, Ld	Tower House, Chowringhee Square ..	ditto
Mitra, Annada Prasad	Settlement Clerk, Accounts Office, E B R	3, Kaylaghat Street	ditto
Mitra, Apurba Krishna	Clerk, I G N & Ry Co, Ld	4, Fairlie Place	ditto
Mitra, Ashutosh	Head Clerk, Imperial Tobacco Co (India), Ld	37, Chowringhee	ditto
Mitra, Atul Krishna	Clerk, Ralli Brothers, Ld	16, Hare Street	ditto
Mitra, Baikuntha Nath ..	Assistant, Babcock & Wilcox, Ld	4, Bankshall Street	ditto
Mitra, Balai Chandra	Inspector, License Department, Calcutta Coporation ..	Municipal Office	ditto
Mitra, Balai Lal	Accountant, E Mayer & Co (1926), Ld	2, Clive Ghat Street	ditto
Mitra, Bankim Chandra	Inspector, Collection Department, Calcutta Corporation ..	Municipal Office	ditto
Mitra, Barada Prasanna	Assistant, Imperial Library	6, Esplanade, East	ditto
Mitra, B B	Assistant Bullion-keeper, Calcutta Mint	47, Strand Road	ditto
Mitra, Basanta Kumar	Lecturer, Vidyasagar College	39, Sanker Ghose Lane	ditto
Mitra, Basanta Kumar	Head Clerk, North British & Mercantile Insurance Co, Ld ..	101-1, Clive Street	ditto

No.	Names.	Style or calling.	Residence or place of business.	Religion.
	Mitra, Bhabataran, BA	Assistant, Central Stationery Office	3, Church Lane	Hindu
	Mitra, Bholanath	Assistant, Accountant-General's Office, Bengal	Treasury Buildings	ditto
	Mitra, Bhuban Mohan	Assistant, Agriculture & Industries Department, Bengal	Writers' Buildings	ditto
	Mitra, Bhupendra Nath	Assistant, Price, Waterhouse, Peat & Co	B-4, Clive Buildings	ditto
	Mitra, Bhupendra Nath	Clerk, E A's Office, E I R	E I R House	ditto
	Mitra, Bhupendra Nath	Assistant, Babcock and Wilcox, Ld	4, Bankshall Street	ditto
	Mitra, Bhupendra Nath	Sub-head, Accounts Office, E B R	3, Kaylaghat Street	ditto
	Mitra, Bhupendra Nath	Examiner of Stores, Indian Stores Department (Inspection)	6, Esplanade, East	ditto
	Mitra, Bibhuti Bhusan	Court Clerk, C C M's Office, E I R	E I R House	ditto
	Mitra, Bihari Lal	Assistant, Accountant-General's Office, Bengal	Treasury Buildings	ditto
	Mitra, Bijayendra Nath	Inspector of Smoke Nuisances, Bengal	3, Charnock Place	ditto
	Mitra, Bijay Kumar	Cashier, Symonds & Co	11, Clive Street	ditto
	Mitra, Bijaymadhab, B COM (Edin)	Examiner of Accounts, I T Office	3, Government Place, West	ditto
	Mitra, Bijayratan	Assistant, University College	92, Upper Circular Road	ditto
	Mitra, Birendra Kumar	Assistant, Boiler Office	40-1, Free School Street	ditto
	Mitra, Birendra Lal	Assistant, Kettlewell, Bullen & Co, Ld	21, Strand Road	ditto
	Mitra, Bishnu Charan	Assistant, Indian Stores Department (Inspection)	6, Esplanade, East	ditto

Mitra, Bishwanath, MA	Assistant, Accountant-General's Office, Bengal	Treasury Buildings		ditto
Mitra, Bivash Chandra	Reference Clerk, P H D, Bengal	3, Charnock Place		ditto
Mitra, Braja Gopal	Professor, Bangabasi College	25-1, Scott Lane		ditto
Mitra, Brindaban Chandra, MA	Assistant, Ford, Rhodes, Thornton & Co	Tower House, Chowringhee Square		ditto
Mitra, Brisavasan	Asstt. Estate Superintendent, Port Commissioners' Office	Strand Road		ditto
Mitra, Charu Chandra	Assistant, Board of Revenue, Bengal	Writers' Buildings		ditto
Mitra, Debendra Nath	Clerk, Marine Deptt, South British Insurance Co, Ld	5, Clive Street		ditto
Mitra, Dhirendra Kumar	Clerk, C A O's Office, E I R	E I R House		ditto
Mitra, Dhirendra Nath	Assistant, Accountant-General's Office, Bengal	Treasury Buildings		ditto
Mitra, Dhirendra Nath	Assistant, Ewing & Co, Ld	4, Clive Row		ditto
Mitra, Dwijendra Nath (Rai Sahib)	Stenographer, Office of Controller of Currency	Treasury Buildings		ditto
Mitra, Gajendra Bhusan	Stenographer, North British & Mercantile Insurance Co, Ld	101-1, Clive Street		ditto
Mitra, Girish Chandra	Clerk, Harrison & Crosfield, Ld	6, Church Lane		ditto
Mitra, Gobinda Gopal	Head Clerk, Office of C R E, Presidency & Assam District	Fort William		ditto
Mitra, Gour Kishore	Chief Clerk, P & O Banking Corporation, Ld	1, Fairlie Place		ditto
Mitra, Gunendra Krishna	Clerk, C A O's Office, E I R	E I R House		ditto
Mitra, Haraparbati Kumar, MSc	Stock Verifier, Accounts Department, Calcutta Corporation	Municipal Office		ditto
Mitra, Harendra Prasad	Assistant, Sun Life of Canada	12, Dalhousie Square, East		ditto

No.	Names.	Style or calling.	Residence or place of business.	Religion.
	Mitra, Haridas, BSc ..	.. Assistant, Bengal Secretariat, Commerce Department	.. Writers' Buildings ..	.. Hindu
	Mitra, Haripada ..	.. Assistant, Accounts Department, Calcutta Corporation	.. Municipal Office ..	.. ditto
	Mitra, H C ..	.. Assistant Bullion-keeper, Calcutta Mint	.. 47, Strand Road ..	.. ditto
	Mitra, H C ..	.. Assistant, Shaw, Wallace & Co	.. 4, Bankshall Street ..	.. ditto
	Mitra, Hem Chandra ..	.. Clerk, Shaw, Wallace & Co	.. 4, Bankshall Street ..	.. ditto
	Mitra, Hem Chandra ..	.. Clerk, Traffic Department, E B R	.. 3, Kaylaghat Street ..	.. ditto
	Mitra, H K ..	.. Assistant Bullion-keeper, Calcutta Mint	.. 47, Strand Road ..	.. ditto
	Mitra, Hridaya Ranjan ..	.. Journalist, *Statesman*, Ld	.. Statesman House ..	.. ditto
	Mitra, Janendra Nath ..	.. Clerk, C O S Office, E I R	.. E I R House ..	.. ditto
	Mitra, Jatindra Nath, MA	.. Head Objection Clerk, Assessor's Department, Calcutta Corporation	Municipal Office ..	.. ditto
	Mitra, Jatindra Nath, I ..	.. Clerk, I G N & Ry Co. Ld	.. 4, Fairlie Place ..	.. ditto
	Mitra, J B	.. Head Assistant, Dairy Food Supply Co	.. Stephen House ..	.. ditto
	Mitra, J C, FSS (Lond) ..	.. Professor, Vidyasagar College	.. 39, Shankar Ghose Lane ..	.. Brahmo
	Mitra, J N ..	.. Broker, Queensland Insurance Co, Ld	.. 6, Royal Exchange Place	.. Hindu
	Mitra, Jogeshwar ..	.. Clerk, Mercantile Bank of India, Ld	.. 8, Clive Street ..	.. ditto
	Mitra, Jyotirmaya ..	.. Assistant, Martin & Co	.. 12, Mission Row ..	.. ditto
	Mitra, Jyotis Chandra ..	.. Budget Clerk, C R E's Office, P & A Circle ..	.. Fort William ..	.. ditto

Mitra, Jyotis Chandra	Accountant, American Express Co, Inc	14, Government Place, East		ditto
Mitra, Jyotis Chandra	Stenographer, C M E's Office, E I R	E I R House		ditto
Mitra, Kali Kinkar	Assistant, Office of the Inspector-General of Prisons, Bengal	Writers' Buildings		ditto
Mitra, Kali Prasad	Head Clerk, Imperial Chemical Industries (India), Ld	18, Strand Road		ditto
Mitra, Kanailal	Clerk, Jardine Skinner & Co	4, Clive Row		ditto
Mitra, Kanti Chandra	Head Clerk, Improvement Trust Tribunal	6, Hastings Street		ditto
Mitra, K C	Assistant, Mackinnon, Mackenzie & Co	8, Strand Road		ditto
Mitra, Kedar Nath, BSc	Assistant, Accountant-General's Office, Bengal	Treasury Buildings		ditto
Mitra, Keshab Chandra	Assistant, Martin & Co	12, Mission Row		ditto
Mitra, Khagendra Nath, BA	Assistant, Accountant-General's Office, Bengal	Treasury Buildings		ditto
Mitra, Kiran Chandra	Assistant, Bengal Secretariat, Appointment Department	Writers' Buildings		ditto
Mitra, Kiran Chandra	Accountant, Civil Veterinary Department, Bengal	Writers' Buildings		ditto
Mitra, Lalit Mohan	Assistant, Bengal Secretariat, L S-G Department	Writers' Buildings		ditto
Mitra, Lalit Mohan	Clerk, Shaw, Wallace & Co	4, Bankshall Street		ditto
Mitra, Lal Mohan	Clerk, Union Insurance Society of Canton, Ld	8, Clive Street		ditto
Mitra, L M	Clerk, C E S C, Ld	Victoria House		ditto
Mitra, Madan Gopal	Works Manager, Lal Chand & Sons	76, Lower Circular Road		ditto

No.	Names.	Style or calling.	Residence or place of business.	Religion.
	Mitra, Makhan Lal ..	.. Assistant, Income-Tax Office	.. 3, Government Place, West ..	Hindu
	Mitra, Manimohan ..	.. Assistant, Eastern Bank, Ld	.. 9, Clive Street	ditto
	Mitra, Manindra Nath ..	.. Clerk, Depositors' Deptt, Imperial Bank of India ..	.. Strand Road	ditto
	Mitra, Manmatha Nath ..	.. Clerk, Lloyds Bank, Ld	.. 101-1, Clive Street	ditto
	Mitra, M K ..	.. Assistant, J Thomas & Co	.. 8, Mission Row	ditto
	Mitra, M N ..	.. Assistant, Royal Insurance Co, Ld	.. 26 and 27, Dalhousie Square ..	ditto
	Mitra, M N ..	.. Clerk, John Dewar & Sons, Ld	.. 12, Hare Street	ditto
	Mitra, Nanda Lal ..	.. Assistant, Office of the Controller of Currency ..	.. Treasury Buildings	ditto
	Mitra, Nanilal ..	.. Assistant, Babcock & Wilcox, Ld	.. 4, Bankshall Street	ditto
	Mitra, Narendra Nath, BA	.. Assessing Inspector, Calcutta Corporation ..	.. Municipal Office	ditto
	Mitra, Narendra Nath	.. Ledger-keeper, Place, Siddons & Gough	.. 6, Lyons Range	ditto
	Mitra, Narendra Nath, BSC	.. Assistant, Agriculture and Industries Department, Bengal	.. Writers' Buildings	ditto
	Mitra, Narendra Nath ..	.. Partner, Mitra Brothers	.. 98, Clive Street	ditto
	Mitra, Nirad Charan ..	.. Librarian, Bengal Secretariat Library	.. Writers' Buildings	ditto
	Mitra, N N ..	.. Assistant Inspector, C E S C, Ld	.. Victoria House	ditto
	Mitra, Panchanan ..	.. Assistant, Davenport & Co, Ld	.. 6, Church Lane	ditto
	Mitra, Paran Chandra ..	.. Clerk, C A O's Office, E I R	.. E I R House	ditto

Mitra, Paresh Nath ..	.. Assistant, J Thomas & Co.	.. 8, Mission Row ..	..	ditto
Mitra, Paritosh, MSC ..	.. Assistant, Accounts Department, Calcutta Corporation	.. Municipal Office ..	..	ditto
Mitra, P C, BA ..	.. Clerk, Superintendent's Office	.. Sir Stuart Hogg Market	..	ditto
Mitra, Prabodh Kumar ..	.. Clerk, Calcutta Improvement Trust	.. 5, Clive Street ..	..	ditto
Mitra, Prafulla Chandra ..	.. Assistant, Accountant-General's Office, Bengal ..	.. Treasury Buildings ..	..	ditto
Mitra, Prankrishna ..	.. Assistant, Mackinnon, Mackenzie & Co	.. 16, Strand Road ..	..	ditto
Mitra, Prankumar ..	.. Assistant, Bengal Chamber of Commerce ..	.. 2, Clive Street ..	..	ditto
Mitra, Pratul Chandra ..	.. Assistant, Accountant-General's Office, Bengal ..	.. Treasury Buildings ..	..	ditto
Mitra, Pravas Chandra ..	.. Surveyor, Calcutta Improvement Trust	.. 5, Clive Street ..	..	ditto
Mitra, Pravas Chandra, BA ..	Assistant, Bengal Secretariat, Police Department ..	.. Writers' Buildings ..	..	ditto
Mitra, Pulinkrishna, MA ..	.. Assistant, Commercial Intelligence Department, India	.. 1, Council House Street ..	..	ditto
Mitra, Pulin Kumar ..	.. Assistant, Surgeon-General's Office, Bengal ..	.. Writers' Buildings ..	..	ditto
Mitra, Radha Shyam ..	.. Assistant, Senda & Co (India), Ld	.. 135, Canning Street ..	..	ditto
Mitra, Rajendra Krishna ..	Cashier, Volkart Brothers	.. 11, Clive Street ..	..	ditto
Mitra, Rajendra Lal ..	.. Clerk, Shaw, Wallace & Co	.. 4, Bankshall Street ..	..	ditto
Mitra, Rakhal Das, BSC, BT ..	Assistant Master, Hindu School	.. College Square ..	..	ditto
Mitra, Rakhal Das ..	.. Stenographer, C O P S Office, E I R	.. E I R House	..	ditto
Mitra, Ramesh Chandra ..	.. Clerk, Lloyds Bank, Ld	.. 101-1, Clive Street ..	..	ditto

Ne	Names.	Style or calling.	Residence or place of business.	Religion.
	Mitra, Ramesh Chandra ..	Clerk, Share Department, Imperial Bank of India ..	Strand Road	Hindu
	Mitra, Ramapada	Clerk, Calcutta Improvement Trust	5, Clive Street	ditto
	Mitra, Ramtarak	Overseer, Engineering Department, Port Commissioners' Office ..	Strand Road	ditto
	Mitra, Rasbihari	Clerk, Gillanders, Arbuthnot & Co	8, Clive Street	ditto
	Mitra, Rishendra Krishna ..	Assistant Teacher, Government School of Art	28, Chowringhee	ditto
	Mitra Sanat Kumar	Sales Clerk, Lipton, Ld	9, Weston Street	ditto
	Mitra, Sarada Chandra	Overseer, Calcutta Improvement Trust	5, Clive Street	ditto
	Mitra, Sarashi Bhusan	Accountant, Automobile Association of Bengal	40, Chowringhee	ditto
	Mitra, Satindra Nath	Inspector, Collection Department, Calcutta Corporation ..	Municipal Office	ditto
	Mitra, Satish Chandra	Assistant, Bengal Secretariat Record Room	Writers' Buildings	ditto
	Mitra, Satish Chandra	Assistant, Martin & Co	12, Mission Row	ditto
	Mitra, Satyacharan	Clerk, Grindlay & Co, Ld	6, Church Lane	ditto
	Mitra, Satyendra Nath	Assistant, Commercial Intelligence Department, India ..	1, Council House Street	ditto
	Mitra, Satyendra Nath, BSc ..	Analyst, Calcutta Corporation	Municipal Office	ditto
	Mitra, S. C.	Clerk, P S Office, E I R	E I R House	ditto
	Mitra, Shachindra Nath	Assistant, Eastern Bank, Ld	9, Clive Street	ditto
	Mitra, Shachindra Nath	Assistant, Imperial Library	6, Esplanade, East	ditto

Mitra, Shailendra K	.. Engr. Supervisor, Calcutta Corporation, District III	.. Hogg Street ..	..	.. ditto
Mitra, Shailendra Nath ..	.. Clerk, C A O's Office, E I R ..	.. .. E I R House	..	.. ditto
Mitra, Sharat Chandra ..	.. Clerk, Lloyds Bank, Ld ..	.. .. 101-1, Clive Street	..	.. ditto
Mitra, Sitangshu Bhusan, MA	.. Clerk, Office of the Controller of Army Factory Accounts	.. 6, Esplanade, East	..	.. ditto
Mitra, S K ..	.. Accountant, Y M C A ..	.. .. 25, Chowringhee	..	.. ditto
Mitra, S N ..	.. Clerk, C E S C, Ld ..	.. .. Victoria House	..	.. ditto
Mitra, S P ..	.. Accountant, Reuters, Ld ..	.. .. 26-7, Dalhousie Square		.. ditto
Mitra, Subodh Chandra ..	.. Assistant, Bengal Secretariat, Irrigation Department	.. Writers' Buildings	..	.. ditto
Mitra, Subodh Chandra ..	.. Assistant, Imperial Chemical Industries (India), Ld..	.. 18, Strand Road	..	.. ditto
Mitra, Sudhir Kumar ..	.. Examiner of Stores, Indian Stores Department (Inspection)	.. 6, Esplanade, East	..	.. ditto
Mitra, Sudhish Chandra, MA	.. Assistant Superintendent, Office of the Controller of Currency	.. Treasury Buildings	..	.. ditto
Mitra, Surendra Kumar ..	.. Clerk, Jardine Skinner & Co ..	.. .. 4, Clive Row	..	.. ditto
Mitra, Surendra Nath ..	.. Clerk, National Bank of India, Ld ..	.. .. 104, Clive Street	..	.. ditto
Mitra, T N ..	.. Clerk, Burmah-Shell Co of India, Ld ..	.. .. Hongkong House	..	.. ditto
Mitra, Upendra Nath ..	.. Sub-Head, Accounts Deptt, E B R ..	.. .. 3, Kaylaghat Street	..	.. ditto
Mitter, Chuni Lal, BA ..	.. Reader, Government of India Press ..	.. .. 8, Hastings Street	..	.. Christian
Mody, Harmusji Shapurji	.. Assistant, Construction Engineer, C E S C Ld	.. Victoria House	..	.. Zoroastrian
Molla, M Khatib (Maulvi)	.. Assistant, Bengal Secretariat, L S G Department	.. .. Writers' Buildings	..	.. Mahomedan

No.	Names.	Style or calling.	Residence or place of business.	Religion.
	Monga, Shadi Ram	Manager, Lal Chand & Sons	76, Lower Circular Road	Hindu
	Moorty, A S K	Assistant, Burn & Co, Ld	12, Mission Row	ditto
	Moujud, Maulvi Kazi Abdul, MA ..	Assistant, Bengal Secretariat, Judicial Department	Writers' Buildings	Mahomedan
	Mukharji, A	Assistant Accountant Manufacturers Life Insurance Co ..	27, Dalhousie Square	Hindu
	Mukharji, Abani Bhusan ..	Clerk, Cox & Kings (Agents), Ld	5, Bankshall Street	ditto
	Mukharji, Abani Kumar ..	Assistant, Calcutta University	Senate House	ditto
	Mukharji, Abani M	Clerk, Calcutta Improvement Trust	5, Clive Street	ditto
	Mukharji, Abhayapada	Clerk, Audit Office, E I R	E I R House	ditto
	Mukharji, A C	Assistant, Barry & Co	2, Fairlie Place	ditto
	Mukharji, A C	Reader, P S Office, E I R	E I R House	ditto
	Mukharji, Akshaya Kumar ..	Assistant, Martin & Co	12, Mission Row	ditto
	Mukharji, Akshaya Kumar ..	Assistant A-G's Office, Bengal	Treasury Buildings	ditto
	Mukharji, Amal Kumar, BSc ..	Assistant, Martin & Co	12, Mission Row	ditto
	Mukharji, Amarendra Mohan, BA	Examiner of Accounts, Income-tax Office	6, Esplanade, East	ditto
	Mukharji, Amulya Charan ..	Electrical Sub-Overseer, Western Electrical Division, P W D ..	Writers' Buildings	ditto
	Mukharji, Amulya Kumar ..	Head Clerk, Alfred Herbert (India), Ld	13-3, Strand Road	ditto
	Mukharji, Ananda Lal	Assistant, Senda & Co (India), Ld	135, Canning Street	ditto

Mukharji, Ananta Kumar, BA	2nd Head Assistant, Bengal Secretariat, Finance Department	Writers' Buildings		ditto
Mukharji, Anath Nath	Assistant, University College	92, Upper Circular Road		Hindu
Mukharji, Anath Nath	Proprietor, Calcutta Publicity Service	65-2A, Raja Raj Ballav Street		ditto
Mukharji, Anil Chandra	Assistant, Office of the Director of Public Health, Bengal	Writers' Buildings		ditto
Muhharji, Anil Krishna	Clerk, Agent's Office, E I R	E I R House		ditto
Mukharji, Apar Nath	Ledger-keeper, Geo Henderson & Co, Ld	101-1, Clive Street		ditto
Mukharji, Apurba Chandra, BSC	Assistant, Bengal Secretariat, Commerce Department	Writers' Buildings		ditto
Mukharji, Apurba Kumar	Clerk, Alfred Herbert (India), Ld	13-3, Strand Road		ditto
Mukharji, Ardhendu Bhusan	Surveyor and Estimator, Calcutta Corporation	Municipal Office		ditto
Mukharji, Arun Prakash	Assistant, Calcutta University	Senate House		ditto
Mukharji, Ashutos	Assistant, James Finlay & Co, Ld	1, Clive Street		ditto
Mukharji, Ashutos	Clerk, Agency Department, E B R	3, Kaylaghat Street		ditto
Mukharji, Aswini Kumar	Auditor, George Read & Co	Avenue House, Chowringhee Square		ditto
Mukharji, Atindra Nath	Head Estimator, Office of the Superintending Engineer, Central Circle, P W D.	Writers' Buildings		ditto
Mukharji, Atul Chandra	Assistant, Macneill & Co	2, Fairlie Place		ditto
Mukharji, Bagalapada	Clerk, C A O's Office, E I R	E I R House		ditto
Mukharji, Balai Chand, BA	Assistant, Accountant-General's Office, Bengal	Treasury Buildings		ditto
Mukharji, Balai Chandra, BA	Stenographer, Union Insurance Society of Canton, Ld	8, Clive Street		ditto

No.	Names.	Style or calling.	Residence or place of business.	Religion.
	Mukharji, Banbihari ..	.. Sub-Head, Accounts Office, E B R	3, Kaylaghat Street ..	Hindu
	Mukharji, Bankim Bihari ..	Assistant, Price, Waterhouse, Peat & Co	B-4, Clive Buildings	ditto
	Mukharji, Bankim Bihari ..	Cashier, American Express Co, Inc	14, Government Place, East ..	ditto
	Mukharji, Bankim Ch	Overseer, Calcutta Improvement Trust	5, Clive Street	ditto
	Mukharji, B B	Clerk, Calcutta Mint	47, Strand Road	ditto
	Mukharji, B B	Reader, P S Office, E I R	E I R House	ditto
	Mukharji, Bhabananda	Accounts Clerk, E B R	3, Kaylaghat Street	ditto
	Mukharji, Bhuban Mohan ..	Head Clerk, North British & Mercantile Insurance Co, Ltd ..	101-1, Clive Street	ditto
	Mukharji, Bhudeb Chandra ..	Assistant, Union Insurance Society of Canton, Ld	8, Clive Street	ditto
	Mukharji, Bhupendra Kumar ..	Superintendent, Agent's Office, E B R	3, Kaylaghat Street	ditto
	Mukharji, Bhupendra Nath ..	Assistant, Office of the Inspector-General of Registration, Bengal.	Writers' Buildings	ditto
	Mukharji, Bhupendra Nath ..	Assistant, Bengal Secretariat, Political Department ..	Writers' Buildings	ditto
	Mukharji, Bibhuti Bhusan ..	Assistant, Price, Waterhouse, Peat & Co	B-4, Clive Buildings	ditto
	Mukharji, Bibhutibhusan ..	Assistant Cashier, Macneill & Co	2, Fairlie Place	ditto
	Mukharji, Bibhuti Bhusan, BA ..	Assistant, Accountant-General's Office, Bengal	Treasury Buildings	ditto
	Mukharji, Bibhutibhusan, BA ..	Clerk, Agent's Office, E B R	3, Kaylaghat Street	ditto
	Mukharji, Bijaya Gopal	Head Clerk, Stores Department, E B R	3, Kaylaghat Street	ditto

Mukharji, Bijaya Krishna	..	Assistant, Andrew Yule & Co, Ld	..	8, Clive Row	ditto
Mukharji, Bijaya Krishna	..	Assistant, Martin & Co	..	12, Mission Row	ditto
Mukharji, Bijaya Kumar	..	Clerk, C A O's Office, E I R	..	E I R Office	ditto
Mukharji, Bimal Chandra	..	Assistant, Accountant-General's Office, Bengal	..	Treasury Buildings	ditto
Mukharji, Binayak Chandra	..	Assistant, Bengal Secretariat, Finance Department	..	Writers' Buildings	ditto
Mukharji, Binode Bhusan, BA	..	Assistant, Accountant-General's Office, Bengal	..	Treasury Buildings	ditto
Mukharji, Birendra Nath, BA	..	Assistant to Inspector of Colleges, Calcutta University	..	Senate House	ditto
Mukharji, Bishnu Charan	..	Surveyor, Port Commissioners' Office	..	Strand Road	ditto
Mukharji, B N	..	Assistant, Salesman Marshal Sons & Co (India), Ld	..	99, Clive Street	ditto
Mukharji, Brajendra Nath	..	Assistant, Office of the Inspector-General of Registration, Bengal		Writers' Buildings	ditto
Mukharji, Chandi Charan	..	Assistant, Lionel Edwards, Ld	..	D-1, Clive Buildings	ditto
Mukharji, Chunilal	..	Assistant Cashier, Imperial Chemical Industries (India), Ld	..	18, Strand Road	ditto
Mukharji, Dasharathi	..	Assistant, Office of the Director of Industries, Bengal	..	40-1A, Free School Street	ditto
Mukharji, Debendra Nath, BA	..	Assistant, Accountant-General's Office, Bengal	..	Treasury Buildings	ditto
Mukharji, Dev Dev, MSc	..	Laboratory Assistant, Zoological Survey of India	..	Indian Museum	ditto
Mukharji, Dhirendra Chandra	..	Assistant, Office of the Inspector-General of Prisons, Bengal	..	Writers' Buildings	ditto
Mukharji, Dhirendra Krishna	..	Professor, Bangabasi College	..	25-1, Scott Lane	ditto
Mukharji, Dhirendra Kumar	..	Assistant, Macneill & Co	..	2, Fairlie Place	ditto

No.	Names.	Style or calling.	Residence or place of business.	Religion.
	Mukharji, Dhirendra Kumar, BA ..	Head Assistant, Calcutta University	92, Upper Circular Road	Hindu
	Mukharji, Dhirendra Nath ..	Assistant, Calcutta University	Senate House	ditto
	Mukharji, Dhirendra Nath ..	Assistant, Indian Stores Department (Inspection)	6, Esplanade, East	ditto
	Mukharji, Dhirendra Nath ..	Clerk, C A's Office, E I R	E I R House	ditto
	Mukharji, Dhirendra Nath ..	Cashier, Scroggie Brothers	2, Clive Ghat Street	ditto
	Mukharji, Dhirendra Nath ..	Shorthand Typist, Presidency College	86-1, College Street	ditto
	Mukharji, Dibendra Nath, MSC ..	Lecturer, City College	102-1, Amherst Street	ditto
	Mukharji, Durga Charan, BA ..	Assistant, Controller's Office, Calcutta University	Senate House	ditto
	Mukharji, Durgadas, MSC ..	Lecturer, University College	92, Upper Circular Road ..	ditto
	Mukharji, Durgapada	Accountant, Robert Kearsley & Co	11, Clive Street	ditto
	Mukharji, Dwarka Nath, MSC ..	Professor, Vidyasagar College	39, Shankar Ghose Lane	ditto
	Mukharji, Dwijendra Nath ..	Accountant, Executive Engineer's Office, City Division, P W D	Writers' Buildings	ditto
	Mukharji, Ganendra Bhusan ..	Assistant (Photo Litho), Survey of India	14, Wood Street	ditto
	Mukharji, Girija Nath, BSC ..	Analyst, Calcutta Corporation	Municipal Office	ditto
	Mukharji, Gobardhandhar ..	Offg Accountant, Accountant-General's Office, Bengal ..	Treasury Buildings	ditto
	Mukharji, Gobinda Chandra ..	Assistant, Accountant-General's Office, Bengal	Treasury Buildings	ditto
	Mukharji, Gobinda Prasad ..	Accountant, Geological Survey of India	27, Chowringhee	ditto

Mukharji, Gokulananda ..	.. Assistant, Office of the Geological Survey of India ..	.. 27, Chowringhee ..	..	ditto
Mukharji, Gopal Chandra	.. Clerk, Turner, Morrison & Co, Ld	.. 6, Lyons Range ..	..	ditto
Mukharji, Gopal Chandra	.. Clerk, Gillanders, Arbuthnot & Co	.. 8, Clive Street ..	..	ditto
Mukharji, Gopeshwar ..	.. Clerk, C O P S Office, E I R	.. E I R House	..	ditto
Mukharji, Gopeshwar	.. Assistant, Office of the Superintending Engineer, Presidency Circle, P. W D	Writers' Buildings ..	..	ditto
Mukharji, Haradeb ..	.. Clerk, Grindlay & Co, Ld	.. 6, Church Lane ..	..	ditto
Mukharji, Haradhan ..	.. Assistant, Calcutta Improvement Trust	.. 5, Clive Street ..	..	ditto
Mukharji, Haradhan, BSc	.. Assistant Analyst, Bengal Public Health Laboratory	.. Chittaranjan Avenue ..	..	ditto
Mukharji, Haran Chandra	.. Publicity Officer, Bengal Co-operative Organisation Journal	.. 3-1, Bankshall Street ..	..	ditto
Mukharji, Haraprasad ..	.. Assistant, Bengal Secretariat, Revenue Department	.. Writers' Buildings ..	..	ditto
Mukharji, Harendra Bhusan	.. Clerk, C M E's Office, E I R	.. E I R House	..	ditto
Mukharji, Harendra Nath	.. Stenographer, Reed, Ward & Co	.. 6, Lyons Range ..	..	ditto
Mukharji, Hari Charan ..	.. Assistant, Holmes, Wilson & Co, Ld	.. Norton Buildings ..	..	ditto
Mukharji, Hari Charan ...	.. Assistant Teacher, Government School of Art ..	.. 28, Chowringhee ..	..	ditto
Mukharji, Haridas ..	.. Demonstrator, Presidency College	.. 86-1, College Street ..	..	ditto
Mukharji, Haridas ..	.. Assistant, Office of the I G of Police	.. Writers' Buildings ..	..	ditto
Mukharji, Haridhan ..	.. Clerk, Shaw, Wallace & Co . .	.. 4, Bankshall Street ..	..	ditto
Mukharji, Haribar ..	.. Clerk, Lloyds Bank, Ld	.. 101-1, Clive Street. ..	..	ditto

No.	Names.	Style or calling.	Residence or place of business.	Religion.
	Mukharji, Hari Mohan	Despatcher, Begg Dunlop & Co, Ld	2, Hare Street	Hindu
	Mukharji, Hari Mohan	Assistant, Macneill & Co	2, Fairlie Place	ditto
	Mukharji, Haripada, BA	Assistant, Office of the Controller of Currency	Treasury Buildings	ditto
	Mukharji, Hari Shankar	Clerk, Shaw, Wallace & Co	4, Bankshall Street	ditto
	Mukharji, Harish Chandra ..	Assistant, Accountant-General's Office, Bengal ..	Treasury Buildings	ditto
	Mukharji, Hem Chandra.. ..	Assistant, Accountant-General's Office, Bengal ..	Treasury Buildings	ditto
	Mukharji, Hem Chandra	Clerk, Agent's Office, E I R	E I R House	ditto
	Mukharji, Hemendra Chandra, MA ..	Lecturer, City College	102-1, Amherst Street	ditto
	Mukharji, Heramba Nath ..	Accountant, Executive Engineer's Office, City Division, P W D	Writers' Buildings	ditto
	Mukharji, Himangshu Shekhar, MA ..	Assistant, Controller's Office, Calcutta University ..	Senate House	ditto
	Mukharji, Hiralal	Head Clerk, Traffic Department, E B R	3, Kaylaghat Street	ditto
	Mukharji, H P	Assistant, Barry & Co	2, Fairlie Place	ditto
	Mukharji, Hridaya Mohan ..	Assistant, Mackinnon, Mackenzie & Co	16, Strand Road	ditto
	Mukharji, I C	Assistant, Barry & Co	2, Fairlie Place	ditto
	Mukharji, Indu Bhusan	Clerk, C A O's Office, E I R	E I R House	ditto
	Mukharji, Indu Bhusan, MA ..	Lecturer, Calcutta Technical School	110, Surendra Nath Banerjee Street	ditto
	Mukharji, Janaki Kumar.. ..	Clerk, Engineer's Office, E B R	3, Kaylaghat Street	ditto

Mukharji, Janaki Nath ..	.. Assistant, Student's Welfare Committee, Calcutta University	.. Senate House	..	.. ditto
Mukharji, Jatadhari ..	.. Assistant, Calcutta Improvement Trust	.. 5, Clive Street	..	.. ditto
Mukharji, Jatindra Kumar	.. Assistant Superintendent, Agency Department, E B R	.. 3, Kaylaghat Street	..	.. ditto
Mukharji, Jatindra Mohan	.. Salesman, C C Wakefield & Co, Ld	.. 7, Royal Exchange Place		.. Christian
Mukharji, Jatindra Nath, BA	.. Assistant, Bengal Secretariat, Judicial Department ..	.. Writers' Buildings	..	.. Hindu
Mukharji, Jatindra Nath, MA	.. Personal Assistant to Assessor, Calcutta Corporation	.. Municipal Office	..	.. ditto
Mukharji, Jatindra Nath	.. Stenographer, Bengal Secretariat, Finance Department	.. Writers' Buildings	..	.. ditto
Mukharji, Jatindra Nath	.. Clerk, Shaw, Wallace & Co	.. 4, Bankshall Street	..	.. ditto
Mukharji, Jatindra Nath	.. Clerk, Gillanders, Arbuthnot & Co	.. 8, Clive Street	..	.. ditto
Mukharji, Jatindra Nath	.. Assistant, Grahams Trading Co (India), Ld ..	.. 6, Lyons Range	..	.. ditto
Mukharji, Jatindra Nath, BA	.. Assistant, Bengal Secretariat, Irrigation Department	.. Writers' Buildings	..	.. ditto
Mukharji, Jatindra Nath	.. Clerk, Lloyds Bank, Ld	.. 101-1, Clive Street	..	.. ditto
Mukharji, Jatindra Nath, BA	.. Clerk, Office of the Controller of Army Factory Accounts	.. 6, Esplanade, East	..	.. ditto
Mukharji, Jaya Krishna ..	.. Clerk, Turner, Morrison & Co, Ld	.. 6, Lyons Range	..	.. ditto
Mukharji, Jibananda ..	.. Assistant, Agriculture and Industries Department, Bengal	.. Writers' Buildings	..	.. ditto
Mukharji, Jiban Krishna	.. Sub-Head, Accounts Office, E B R	.. 3, Kaylaghat Street	..	.. ditto
Mukharji, Jitendra Nath	.. Cashier, Improvement Trust Tribunal	.. 6, Hastings Street	..	.. ditto
Mukharji, Jitendra Nath	.. Overseer, Suburban Division, P W D ..	.. Writers' Buildings	..	.. ditto

No.	Names.	Style or calling.	Residence or place of business.	Religion.
	Mukharji, Jitendra Nath, BL ..	Assistant Master, Hindu School	College Square	Hindu
	Mukharji, Jitendra Nath, BA ..	Assistant, Office of the Inspector-General of Police	Writers' Buildings	ditto
	Mukharji, J N .. .	Assistant, Barry & Co	2, Fairlie Place	ditto
	Mukharji, J N	Clerk, C E S C, Ld	Victoria House	ditto
	Mukharji, Jogendra Nath ..	Assistant, Bengal Secretariat, P W D	Writers' Buildings	ditto
	Mukharji, Jogesh Chandra ..	Clerk, National Bank of India, Ld	104, Clive Street	ditto
	Mukharji, Jogesh Chandra, B A ..	Head Clerk, I T Office	Imperial Secretariat Buildings ..	ditto
	Mukharji, Jogesh Chandra ..	Head Clerk, I-B Petroleum Co, Ld	8, Clive Street	ditto
	Mukharji, Kali Charan	Assistant, Office of the Controller of Currency	Treasury Buildings	ditto
	Mukharji, Kalidas ..	Clerk, Calcutta Improvement Trust	5, Clive Street	ditto
	Mukharji, Kalidas ..	Assistant, Andrew Yule & Co, Ld	8, Clive Row	ditto
	Mukharji, Kalipada	Assistant, Boiler Office	40-1A, Free School Street ..	ditto
	Mukharji, Kaliprasanna	Assistant, Martin & Co	12, Mission Row	ditto
	Mukharji, Kamalapati	Clerk, C O P S Office, E I R	E I R House	ditto
	Mukharji, Kamal Krishna, B Sc ..	Inspector, Collection Department, Calcutta Corporation ..	Municipal Office	ditto
	Mukharji, Kamini Kumar ..	Divisional Accountant, Accountant-General's Office, Bengal ..	Treasury Buildings	ditto
	Mukharji, Kanai Lal ..	Assistant, T M's Department, Port Commissioner's Office ..	Strand Road	ditto

Mukharji, Karali Mohan ..	..	Cashier, The I-B Petroleum Co, Ld	..	8, Clive Street ..	ditto
Mukharji, Kartic Chandra, B L	..	Stock Verifier, Accounts Department, Calcutta Corporation	..	Municipal Office	ditto
Mukharji, Karunamaya ..	..	Assistant, Octavius Steel & Co, Ld	..	14, Old Court House Street ..	ditto
Mukharji, Karunamaya ..	..	Assistant, Mackinnon, Mackenzie & Co	..	16, Strand Road	ditto
Mukharji, K B	..	Clerk, Burmah-Shell Co of India, Ld	..	Hongkong House	ditto
Mukharji, Khagendra Nath	..	Clerk, P D O, Imperial Bank of India ..	..	8, Council House Street	ditto
Mukharji, Kiran Kumar, BA	..	Head Assistant, Mathematical Instrument Office ..	..	15, Wood Street	Christian
Mukharji, Krishna Lal, BA	..	Clerk, City Architect's Department, Calcutta Corporation	..	Municipal Office	Hindu
Mukharji, Kshetra Dhan	..	Accountant, North British & Mercantile Insurance Co, Ld	..	101-1, Clive Street	Ditto
Mukharji, Kshetra Mohan	..	Assistant Cashier, Landale & Clark, Ld ..	..	11, Clive Street	ditto
Mukharji, Kshetra Nath ..	..	Assistant, Bird & Co ..	..	1-1, Clive Street	ditto
Mukharji, Kshetra Pal ..	..	Assistant, Mackenzie Lyall & Co	..	5, Mission Row	ditto
Mukharji, Kshirode Chandra	..	Assistant, Martin & Co	..	12, Mission Row	ditto
Mukharji, Khirode Mohan	..	Assistant Engineer, Martin & Co	..	12, Mission Row	ditto
Mukharji, Kshitish Chandra, BL	..	Assistant, Commercial Intelligence Department, India	..	1, Council House Street	ditto
Mukharji, Lal Bihari ..	..	Clerk, Assessor's Department, Calcutta Corporation ..		Municipal Office	ditto
Mukharji, Lal Gopal ..	..	Clerk, Mercantile Bank of India, Ld	..	8, Clive Street	ditto
Mukharji, Lalit Kumar .	..	Assistant Superintendent, Agent's Office, E B R ..	..	3, Kaylaghat Street	ditto

No.	Names.	Style or calling.	Residence or place of business.	Religion.
	Mukharji, Lalit Mohan ..	.. Estimator, Calcutta Improvement Trust	.. 5, Clive Street	Hindu
	Mukharji, Lalit Mohan ..	.. Assistant, Grahams Trading Co (India), Ld ..	.. 6, Lyons Range	ditto
	Mukharji, Lalit Mohan ..	.. Clerk, Turner, Morrison & Co, Ld	.. 6, Lyons Range	ditto
	Mukharji, Lalit Mohan, BA	.. 2nd Assistant, Office of the Commissioner of Income-tax	.. Imperial Secretariat Buildings ..	ditto
	Mukharji, Lalmohan	.. Clerk, Harrison & Crosfield, Ld	.. 6, Church Land ..	ditto
	Mukharji, Lalmohan ..	.. Accountant, Stewart & Co	.. 8, Clive Street	ditto
	Mukharji, L M ..	.. Clerk, Burmah-Shell Co of India, Ld	.. Hongkong House	ditto
	Mukharji, L M ..	.. Assistant, McGregor & Balfour, Ld ..	.. 11, Clive Street	ditto
	Mukharji, Makhanlal	.. Assistant Head Clerk, Imperial Tobacco Co of India, Ld	.. 37, Chowringhee	ditto
	Mukharji, Makhan Lal ..	.. Clerk, Accounts Department, Imperial Bank of India	.. Strand Road	ditto
	Mukharji, Makhan Lal ..	.. Accountant, Bengal Chamber of Commerce ..	.. 2, Clive Street	ditto
	Mukharji, Manamohan ..	.. Assistant, Bird & Co ..	.. 1-1, Clive Street	ditto
	Mukharji, Manamohan ..	.. Assistant, Bengal Secretariat, Finance Department	.. Writers' Buildings	ditto
	Mukharji, Manamohan ..	.. Assistant, Calcutta University	.. Senate House	ditto
	Mukharji, Manamohan ..	.. Assistant, Reed, Ward & Co	.. 6, Lyons Range	ditto
	Mukharji, Manamohan ..	.. Clerk, Gillanders, Arbuthnot & Co ..	.. 8, Clive Street	ditto
	Mukharji, Manatosh	.. Advt Inspector, Traffic Department, E B R ..	.. 3, Kaylaghat Street	ditto

Mukharji, Manimohan ..	..	Clerk, Agent's Office, E B R ..	..	3, Kaylaghat Street ..	.. ditto
Mukharji, Manindra Nath	..	Assistant, Accountant-General's Office, Bengal ..	..	Treasury Buildings ..	.. ditto
Mukharji, Manindra Nath, BA	..	Assessor, Income-tax Office ..	..	3, Government Place, West	.. ditto
Mukharji, Manmatha Nath	..	Clerk, C O S Office, E I R ..	..	.. E I R House ..	.. ditto
Mukharji, Manmatha Nath	..	Overseer, Suburban Division, P W D ..	..	.. Writers' Buildings ..	.. ditto
Mukharji, Manmatha Nath	..	Assistant, Bird & Co ..	..	.. 1-1, Clive Street ..	.. ditto
Mukharji, Mati Lal ..	..	Head Assistant, Office of the Superintending Engineer, S W Circle, P W D		Treasury Buildings ..	.. ditto
Mukharji, Mati Lal ..	..	Assistant, Royal Insurance Co, Ld ..	..	.. 26 and 27, Dalhousie Square	.. ditto
Mukharji, Mati Lal ..	..	Assistant, Excise Commissioner's Office, Bengal ..	..	Writers' Buildings ..	.. ditto
Mukharji, M N ..	..	Clerk, Calcutta Mint ..	..	.. 47, Strand Road ..	.. ditto
Mukharji, M N ..	..	Assistant, Bird & Co ..	..	.. 1-1, Clive Street ..	.. ditto
Mukharji, Mohit Kumar ..	..	Head Clerk, Lloyds Bank, Ld ..	..	.. 101-1, Clive Street ..	.. ditto
Mukharji, Mrityunjaya ..	..	Clerk, Birkmyre Bros ..	..	.. 6, Clive Row ..	.. ditto
Mukharji, Mrityunjaya ..	..	Clerk, National Bank of India, Ld ..	..	.. 104, Clive Street ..	.. ditto
Mukharji, Nabin Bhusan	..	Assistant, A G's Office, Bengal ..	..	.. Treasury Buildings ..	.. ditto
Mukharji, Nagendra N	..	Clerk, Calcutta Improvement Trust ..	..	.. 5, Clive Street ..	.. ditto
Mukharji, Nagendra Nath	..	Assistant, Mackinnon, Mackenzie & Co ..	..	.. 16, Strand Road ..	.. ditto
Mukharji, Nagendra Nath, BA	..	Clerk, Office of the Controller of Army Factory Accounts		.. 6, Esplanade, East ..	.. ditto

No.	Names.	Style or calling.	Residence or place of business.	Religion.
	Mukharji, Nalini Mohan ..	.. Assistant, Ludlow Jute Co, Ld	.. 7, Royal Exchange Place ..	Hindu
	Mukharji, Nanda Lal ..	.. Assistant, Accounts Department, Calcutta Corporation	.. Municipal Office	ditto
	Mukharji, Nanda Lal ..	.. Assistant, Central Stationery Office	.. 3, Church Lane	ditto
	Mukharji, Nani Gopal ..	.. Assistant, Bird & Co	.. 1-1, Clive Street	ditto
	Mukharji, Nani Gopal ..	.. Professor, Bangabasi College	.. 25-1, Scott Lane ..	ditto
	Mukharji, Nani Gopal ..	.. Assistant, Office of the Controller of Currency ..	.. Treasury Buildings	ditto
	Mukharji, Nani Mohan ..	.. Head Assistant, Bengal Secretariat Record Room ..	.. Writers' Buildings	ditto
	Mukharji, Narendra Krishna	.. Accountant, Licensed Measurers Department ..	.. 2, Clive Street	ditto
	Mukharji, Narendra Nath	.. Cashier, Licensed Measurers Department ..	.. 2, Clive Street	ditto
	Mukharji, Narendra Nath	.. Cashier and Accountant, Linotype & Machinery, Ld	.. 21, Bowbazar Street	ditto
	Mukharji, Narendra Nath	.. Overseer, Engineering Department, Port Commissioners' Office	. Strand Road	ditto
	Mukharji, Narendra Nath	.. Assistant, Bengal Secretariat, P W D ..	.. Writers' Buildings	ditto
	Mukharji, N. C. ..	.. Clerk, Burmah-Shell Co of India, Ld ..	.. Hongkong House	ditto
	Mukharji, Nirapada ..	.. Assistant Estimator, Calcutta Improvement Trust ..	.. 5, Clive Street	ditto
	Mukharji, Nirmal Chandra	.. Assistant, Balmer, Lawrie & Co, Ld ..	.. 103, Clive Street	ditto
	Mukharji, Nirmal Shashi, BA	.. Assistant, Surveyor-General's Office	.. 13, Wood Street	ditto
	Mukharji, Nitaigopal	.. Clerk, Calcutta Improvement Trust	.. 5, Clive Street	ditto

Mukharji, Nripendra Mohan	Assistant, Calcutta University	.. .. ..	Senate House	.. .. ditto
Mukharji, Nripendra Nath	Clerk, Secretary's Department, Port Commissioners' Office	..	Strand Road	.. .. ditto
Mukharji, Nrisingha Charan	Assistant, Bengal Secretariat, Irrigation Department	..	Writers' Buildings	.. .. ditto
Mukharji, Nritya Gopal ..	Surveyor and Estimator, Calcutta Corporation	.. ..	Municipal Office	.. .. ditto
Mukharji, Panchanan ..	Assistant, Office of the Director of Public Health, Bengal	..	Writers' Buildings	.. .. ditto
Mukharji, Panchanan ..	Overseer, City Division, P W D	.. .. ..	Writers' Buildings	.. .. ditto
Mukharji, Panchanan ..	Clerk, Collection Department, Calcutta Corporation	.. ..	Municipal Office	.. .. ditto
Mukharji, Panchanan ..	Clerk, Pre-Audit, Port Commissioners' Office	.. ..	Strand Road	.. .. ditto
Mukharji, Panchkari ..	Levlg Surveyor, Spl Officer's Department, Calcutta Corporation		Municipal Office	.. .. ditto
Mukharji, Panchu Gopal	.. Clerk, C A's Office, E I R	.. ..	E I R House	.. .. ditto
Mukharji, Panchu Gopal	.. Assistant, Bird & Co	.. .. ..	1-1, Clive Street	.. .. ditto
Mukharji, Panchu Gopal	.. Assistant, Begg Dunlop & Co, Ld	.. .. ..	2, Hare Street	.. .. ditto
Mukharji, Paresh Chandra, BA	.. Librarian, Bethune College	.. ..	181, Cornwallis Street	.. .. ditto
Mukharji, Phani Bhusan	.. Assistant, Calcutta Improvement Trust	.. .. ..	5, Clive Street	.. .. ditto
Mukharji, Phani Bhusan	.. Estimator, Executive Engineer's Office, City Division, P W D	..	Writers' Buildings	.. .. ditto
Mukharji, Phani Bhusan	.. Clerk, Office of the Controller of Army Factory Accounts	..	6, Esplanade East	.. .. ditto
Mukharji, Phani Bhusan	.. Head Clerk, Roberts, McLean & Co, Ld	.. .. ..	101, Clive Street	.. .. ditto
Mukharji, Phani Bhusan	.. Professor, Bangabasi College	.. ..	25-1, Scott Lane	.. .. ditto

No.	Names.	Style or calling.	Residence or place of business.	Religion.
	Mukharji, Phelaram	Inspector, Collection Department, Calcutta Corporation ..	Municipal Office	Hindu
	Mukharji, Prabhat Chandra ..	Assistant, Accounts Department, Calcutta Corporation ..	Municipal Office	ditto
	Mukharji, Prabodh Chandra ..	Assistant, Mackinnon, Mackenzie & Co	16, Strand Road	ditto
	Mukharji, Prabodh Chandra ..	Head Clerk, Traffic Department, E B R	3, Kaylaghat Street	ditto
	Mukharji, Prabodh Chandra ..	Clerk, Ralli Bros, Ld	16, Hare Street	ditto
	Mukharji, Prabodh Chandra, MA ..	Assistant, Calcutta University	Senate House	ditto
	Mukharji, Prabodh Kumar ..	Assistant, Bengal Secretariat, Finance Department	Writers' Buildings ..	ditto
	Mukharji, Prafulla Dhan ..	Clerk, Place, Siddons & Gough	6, Lyons Range	ditto
	Mukharji, Prafulla Kumar ..	Assistant, Bird & Co	1-1, Clive Street	ditto
	Mukharji, Prafulla Kumar ..	Cashier, Carr & Co, Ld	3, Waterloo Street	ditto
	Mukharji, Prafulla Kumar ..	Assistant, Mackinnon Mackenzie & Co	16, Strand Road	ditto
	Mukharji, Pran Krishna ..	Head Clerk, Mechl Department, E B R	3, Kaylaghat Street	ditto
	Mukharji, Prasad Das	Clerk, Turner, Morrison & Co, Ld	6, Lyons Range	ditto
	Mukharji, Pravas Chandra ..	Head Clerk, Traffic Department, E B R	3, Kaylaghat Street ..	ditto
	Mukharji, Pulin Bihari ..	Assistant, Commercial Intelligence Department ..	.. 1, Council House Street	ditto
	Mukharji, Pulin Bihari	Clerk, W T Henley's Telegraph Works, Co, Ld ..	.. Old Court House Corner ..	ditto
	Mukharji, Pulin Krishna ..	Assistant, Martin & Co	12, Mission Row	ditto

Mukharji, Purna Ch	Clerk, Calcutta Improvement Trust	5, Clive Street		ditto
Mukharji, Purna Chandra	Assistant, Accountant-General's Office, Bengal	Treasury Buildings		ditto
Mukharji, Purna Chandra	Clerk, Place, Siddons & Gough	6, Lyons Range		ditto
Mukharji, Radha Charan, MA	Assistant, Calcutta University	Senate House		ditto
Mukharji, Radha Charan	Assistant, Andrew Yule & Co, Ld	8, Clive Row		ditto
Mukharji, Radha Krishna, BA	Assistant, Bengal Secretariat, Finance Department	Writers' Buildings		ditto
Mukharji, Raghubar, BA	Accounts Clerk, Dredger Division	3, Charnock Place		ditto
Mukharji, Raghunath	Salesman, Dodge & Seymour, Ld	Tower House, Chowringhee Square		ditto
Mukharji, Rajendra Nath	Assistant, Bird & Co	1-1, Clive Street		ditto
Mukharji, Rajkumar, BA	Assistant, Controller's Office, Calcutta University	Senate House		ditto
Mukharji, Rajkumar	Clerk, Engineering Department, Port Commissioners' Office	Strand Road		ditto
Mukharji, Ramani Mohan	Peshkar, Improvement Trust Tribunal	6, Hastings Street		ditto
Mukharji, Ramani Mohan	Head Clerk, Ludlow Jute Co, Ld	7, Royal Exchange Place		ditto
Mukharji, Ramesh Chandra	Head Clerk, Executive Engineer's Office, Hijli Division	Writers' Buildings		ditto
Mukharji, Rampada	Assistant, Accountant-General's Office, Bengal	Treasury Buildings		ditto
Mukharji, R D	Inspector, Standard Life Assurance Co	32, Dalhousie Square		ditto
Mukharji, Sachchidananda, M SC	Assistant Teacher, Bethune Collegiate School	181, Cornwallis Street		ditto
Mukharji, Sadhandhan	Assistant, Bird & Co	1-1, Clive Street		Christian

No.	Names.	Style or calling.	Residence or place of business.	Religion.
	Mukharji, Sajani Mohan	Assistant, Ludlow Jute Co, Ld	7, Royal Exchange Place ..	Hindu
	Mukharji, Santanu Kumar ..	Demonstrator, Presidency College	86-1, College Street	ditto
	Mukharji, Santos Kumar ..	Assistant, Calcutta Improvement Trust	5, Clive Street	ditto
	Mukharji, Santos Kumar ..	Stenographer, Harrisons & Crosfield, Ld	6, Church Lane	ditto
	Mukharji, Santos Kumar ..	Superintendent and Head Clerk, Calcutta Improvement Trust ..	5, Clive Street	ditto
	Mukharji, Santos Kumar, No. I ..	Assistant, Central Stationery Office	3, Church Lane	ditto
	Mukharji, Sati Nath	Clerk, Office of the Controller of Army Factory Accounts ..	6, Esplanade, East ..	ditto
	Mukharji, Satindra Nath, I ..	Assistant, Accounts Department, Calcutta Corporation ..	Municipal Office	ditto
	Mukharji, Satindra Nath ..	Draftsman, Surveyor-General's Office	13, Wood Street	ditto
	Mukharji, Satish Chandra ..	Assistant, Office of the Director of Public Health, Bengal ..	Writers' Buildings	ditto
	Mukharji, Satish Chandra ..	Stenographer, Imperial Chemical Industries (India), Ld ..	18, Strand Road	ditto
	Mukharji, Satish Chandra ..	Clerk, Lloyds Bank, Ld	101-1, Clive Street	ditto
	Mukharji, Satkari	Assistant, Lovelock & Lewes	4, Lyons Range	ditto
	Mukharji, Satya Charan	Assistant, Kettlewell, Bullen & Co, Ld	21, Strand Road	ditto
	Mukharji, Satya Charan, B SC ..	Demonstrator, Ripon College	24, Harrison Road	ditto
	Mukharji, Satya Charan ..	Assistant, Mackinnon Mackenzie & Co	16, Strand Road	ditto
	Mukharji, Satya Hari	Assistant, Accountant-General's Office, Bengal	Treasury Buildings	ditto

Mukharji, Satyendra Kumar	..	Assistant, Ford, Rhodes, Thornton & Co	..	Tower House, Chowringhee Square .. ditto
Mukharji, S B ..	..	Assistant, Barry & Co	..	2, Fairlie Place .. .. ditto
Mukharji, S C ..	..	Assistant Bullion-keeper, Calcutta Mint	..	47, Strand Road .. .. ditto
Mukharji, S C ..	..	Clerk, Burmah-Shell Co of India, Ld ..	..	Hongkong House .. .. ditto
Mukharji, S G ..	..	Assistant, Associated Engineers, Ld ..	..	14, Clive Street .. .. ditto
Mukharji, Shachindra Nath, B Sc	..	Analyst, Calcutta Corporation ..	..	Municipal Office .. .. ditto
Mukharji, Shailajananda	..	Assistant Inspector of Messes, Calcutta University	..	Senate House .. .. ditto
Mukharji, Shailendra Nath	..	Assistant, Calcutta University ..	..	Senate House .. .. ditto
Mukharji, Sharat Chandra	..	Clerk, Marine Department, South British Insurance Co, Ld	..	5, Clive Street .. .. ditto
Mukharji, Sharat Chandra	..	Assistant, Bengal Secretariat, P W D ..	..	Writers' Buildings .. .. ditto
Mukharji, Sharat Shashi	..	Assistant, McLeod & Co ..	..	28, Dalhousie Square .. .. ditto
Mukharji, Shashadhar	..	Auditor, George Read & Co ..	..	Avenue House, Chowringhee Square ditto
Mukharji, Shashanka Shekhar	..	Head Clerk, Imperial Tobacco Co of India, Ld ..	..	37, Chowringhee .. .. ditto
Mukharji, Shashi Bhusan	..	Assistant, Sun Life of Canada ..	..	12, Dalhousie Square, East .. ditto
Mukharji, Shivadas ..	..	Assistant, Accountant-General's Office, Bengal	..	Treasury Buildings .. .. ditto
Mukharji, Shiva Narayan	..	Stenographer, Traffic Department, E B R ..	..	3, Kaylaghat Street .. .. ditto
Mukharji, Shivapada ..	..	Assistant, Accountant-General's Office, Bengal ..	..	Treasury Buildings .. .. ditto
Mukharji, Shiva Prasad ..	..	Assistant, Mackinnon, Mackenzie & Co ..	..	16, Strand Road .. .. ditto

No.	Names.	Style or calling.	Residence or place of business.	Religion.
	Mukharji, Shivaram ..	.. Assistant, Accountant-General's Office, Bengal ..	.. Treasury Buildings	Hindu
	Mukharji, Shivaram ..	.. Clerk, Lighting Department, Calcutta Corporation ..	.. Municipal Office	ditto
	Mukharji, Shrish Chandra ..	Clerk, Mercantile Bank of India, Ld	.. 8, Clive Street	ditto
	Mukharji, Shrish Chandra ..	Accounts Clerk, E B R	.. 3, Kaylagat Street	ditto
	Mukharji, Shyamapada ..	.. Plate-keeper, Photo-Litho Branch, Surveyor-General's Office ..	14, Wood Street	ditto
	Mukharji, Shyamlal, BSc	.. Professor, Vidyasagar College	.. 39, Sankar Ghose Lane	ditto
	Mukharji, Siddheshwar ..	.. Assistant, Board of Revenue, Bengal	.. Writers' Buildings	ditto
	Mukharji, Sitapati ..	.. Engineer Assistant, Jewell Export Filter Co, Inc ..	.. 10, Clive Street	ditto
	Mukharji, S N ..	.. Shipping Clerk, Government Shipping Office ..	.. 15-1, Strand Road	ditto
	Mukharji, Sudhanshu Kumar, BA BT	Assistant Master, Hindu School	.. 1B, College Square	ditto
	Mukharji, Sudhir Chandra ..	Clerk, Mathematical Instrument Office	.. 15, Wood Street	ditto
	Mukharji, Sudhir Kumar ..	Clerk, Ewing & Co, Ld	.. 4, Clive Row	ditto
	Mukharji, Sudin Prakash ..	Head Clerk, Norwich Union Fire Insurance Society, Ld	.. 8, Old Court House Street ..	ditto
	Mukharji, Surath ..	.. Clerk, Cox & Kings (Agents), Ld	.. 5, Bankshall Street	ditto
	Mukharji, Surendra Nath ..	Clerk, Calcutta Improvement Trust	.. 5, Clive Street	ditto
	Mukharji, Surendra Nath ..	Clerk, Jardine, Skinner & Co	.. 4, Clive Row	ditto
	Mukharji, Surendra Nath ..	Accounts Clerk, E B R	.. 3, Kaylaghat Street	ditto

Mukharji, Surendra Nath	Assistant, Explosives Office	1, Council House Street		ditto
Mukharji, Suresh Chandra	Clerk, C A O's Office, E I R	E I R House		ditto
Mukharji, Suresh Chandra, BA	Accounts Clerk, E B R	3, Kaylaghat Street		ditto
Mukharji, Sushen Chandra	Assistant, Office of the Controller of Currency	Treasury Buildings		ditto
Mukharji, Sushil Chandra	Head Assistant, Surgeon-General's Office, Bengal	Writers' Buildings		ditto
Mukharji, Tarak Nath, BA	Assessing Inspector, Calcutta Corporation	Municipal Office		ditto
Mukharji, Taranath	Stenographer, Balmer, Lawrie & Co, Ld	103, Clive Street		ditto
Mukharji, Tarapada	Clerk, C O P S Office, E I R	E I R House		ditto
Mukharji, Tarapada, BA	Assistant, Accountant-General's Office, Bengal	Treasury Buildings		ditto
Mukharji, Tarapada	Clerk, C A O's Office, E I R	E I R House		ditto
Mukharji, Tinkari	Assistant, McLeod & Co	28, Dalhousie Square		ditto
Mukharji, Tinkari, BA	Head Clerk, Stewart & Co	8, Clive Street		ditto
Mukharji, Tulsi Charan	Assistant, Botanical Survey of India	Indian Museum		ditto
Mukharji, Tustapada	Accounts Clerk, E B R	3, Kaylaghat Street		ditto
Mukharji, Upendra Chandra	Head Record Clerk, Secretary's Department, Port Commissioners' Office	Strand Road		ditto
Mukharji, Upendra Lal, BE	Assistant, Calcutta Corporation, District III	Hogg Street		ditto
Mukharji, Upendra Nath	Assistant, Mackinnon, Mackenzie & Co	16, Strand Road		ditto
Mukharji, Upendra Nath	Assistant Teacher, Government School of Art	28, Chowringhee		ditto

No.	Names.	Style or calling.	Residence or place of business.	Religion.
	Mukharji, Upendra Nath	Clerk, Agent's Office, E B R	3, Kaylaghat Street	Hindu
	Mukharji, Upendra Nath	Assistant, McLeod & Co	28, Dalhousie Square	ditto
	Mulky, A R	Clerk, Burmah-Shell Co of India, Ld	Hongkong House	ditto
	Munshi, Ananta Kumar, BA	Assistant, Accounts Department, Calcutta Corporation	Municipal Office	ditto
	Musa, Mohammad	Manager, "Star of India"	9, Dharamtala Street	Mahomedan
	Mustafi, Haridas, BA	Assistant, Accountant-General's Office, Bengal	Treasury Buildings	Hindu
	Mustafi, Manindra Nath	Assistant, Office of the Director of Public Health, Bengal	Writers' Buildings	ditto
	Mustafi, Santos Kumar	Clerk, Kettlewell, Bullen & Co, Ld	21, Strand Road	ditto
	Mustafi, Sukumar	Assistant, McLeod & Co	28, Dalhousie Square	ditto
	Mustafi, Surendra Nath, BA	Assistant, Accountant-General's Office, Bengal	Treasury Buildings	ditto
	N			
	Nabi, Ghulam	Assistant (Photo-Litho), Survey of India	14, Wood Street	Mahomedan
	Nag, A K	Assistant, Guest, Keen, Williams, Ld	7, Council House Street	Hindu
	Nag, Fanindra Kumar	Head Clerk, Health Office, District No III, Calcutta Corporation	Hogg Street	ditto
	Nag, Girija Bhusan	Head Clerk, Imperial Tobacco Co of India, Ld	37, Chowringhee	ditto
	Nag, Hari Das	Auditor, Accounts Department, Calcutta Corporation	Municipal Office	ditto
	Nag, Hem Chandra	Clerk, Norwich Union Fire Insurance Society, Ld	8, Old Court House Street	ditto

Nag, Pulin Bihari ..	.. Clerk, Alliance Assurance Co, Ld	.. 2, Hare Street	ditto
Nag, Satish Chandra ..	.. Assistant, Office of the I-G of Police	.. Writers' Buildings	ditto
Nag, Shailendra Prasad, MSc	.. Lecturer, Bethune College	.. 181, Cornwallis Street	ditto
Nag Chaudhuri, Prafulla Kumar	.. Stenographer, Worthington-Simpson, Ld	10, Clive Street	ditto
Nag Chaudhuri, Saroj Kumar	.. Stenographer and Junior Council Reporter	Writers' Buildings	ditto
Naidu, Poorati Govind Rajuloo	.. Sr Clerk, Office of the Controller of Purchase, Indian Stores Department	6, Esplanade East	ditto
Nair, P E ..	.. Reader, Calcutta General Printing Co, Ld	300, Bowbazar Street ..	ditto
Nair, Vedikara Madhavan	.. Secretary, Walford Transport, Ld	71-73, Park Street .	ditto
Nandan, Ashutos ..	.. Assistant, Burn & Co, Ld	12, Mission Row .. .	ditto
Nandi, Advaita Charan ..	.. Cashier, T E Thomson & Co, Ld	9, Esplanade, East .. .	ditto
Nandi, Amulya Ratan ..	.. Clerk, National Bank of India, Ld	104, Clive Street .. .	ditto
Nandi, Anukul Chandra	.. Stock Verifier, Accounts Department, Calcutta Corporation ..	Municipal Office .. .	ditto
Nandi, Ashutos ..	.. Clerk, Agent's Office, E B R	3, Kaylaghat Street	ditto
Nandi, Baidyanath	.. Chief Clerk, Store Account, C E S C, Ld	Victoria House	ditto
Nandi, Baidyanath ..	.. Assistant, Commercial Intelligence Department	1, Council House Street	ditto
Nandi, Bishnupada, BA ..	.. Assistant, Accountant-General's Office, Bengal	Treasury Buildings	ditto
Nandi, Jatindra Nath ..	.. Assistant, F W Heilgers & Co	1-1, Clive Street	ditto
Nandi, Kumud Nath ..	.. Assistant Inspector, C E S C, Ld	Victoria House	ditto

No.	Names.	Style or calling.	Residence or place of business.	Religion.
	Nandi, Manmatha Nath ..	Assistant, Brooke Bond (India), Ld	2, Metcalfe Street	Hindu
	Nandi, Manindra Nath ..	Clerk, Macmillan & Co, Ld	294, Bowbazar Street	ditto
	Nandi, M N	Clerk, Liverpool & London & Globe Insurance Co, Ld ..	26, Dalhousie Square	ditto
	Nandi, Nalin Vihari	Accountant, Geo O, Penn & Co	22, Chowringhee	ditto
	Nandi, Nandalal	Clerk, C A O's Office, E I R	E I R House	ditto
	Nandi, Prabodh Chandra, BA ..	Assistant, Office of the Controller of Currency	Treasury Buildings	ditto
	Nandi, R K	Clerk, P. S Office, E I R	E I R House	ditto
	Nandi, Sharat Chandra	Clerk, National Bank of India, Ld	104, Clive Street	ditto
	Nandi, Shashi Bhusan ..	Head Clerk, Office of the Executive Engineer, Suburban Division, P W D	Writers' Buildings	ditto
	Nandi, Suryya Kumar ..	Asstt Accountant, Bengal Provincial Co-operative Bank, Ld ..	Writers' Buildings	ditto
	Nandi, Tara Chand	Professor, Bangabasi College	25-1, Scott Lane	ditto
	Nandi, Tarakdas	Clerk, Lloyds Bank, Ld	101-1, Clive Street	ditto
	Narayan, Ganti Yeggen	Clerk, Standard Telephones & Cables, Ld	C-2, Clive Buildings	ditto
	Narayan, Joy	Clerk, Agent's Office, E I R	E I R House	ditto
	Narayan, Kumarapuram Parameswar	Stenotypist, Martin & Co	12, Mission Row	ditto
	Narayan, V V S	Chief Accountant, Remington Rand Inc	3, Council House Street ..	ditto
	Narayanswami, N	Assistant, Octavius Steel & Co, Ld	14, Old Court House Street ..	ditto

Narielwala, M B	Law Officer, Central Bank of India, Ld	100, Clive Street	Zoroastrian
Naskar, M L	Book-keeper, Glenfield & Kennedy, Ld	4, Fairlie Place	Hindu
Nataranjan, Minakshi Sundaram	Assistant, Andrew Yule & Co, Ld	8, Clive Row	ditto
Nath, Jnanendra Chandra	Building Inspector, Calcutta Corporation	Municipal Office	ditto
Nath, Manmatha Nath	Assistant, W Newman & Co, Ld	3, Old Court House Street	ditto
Nath, Narayan Chandra, MA	Assistant, Map Record Branch, Surveyor-General's Office	13, Wood Street	ditto
Nath, Prasad Chandra	Assistant, Retouching Section, Photo-Litho Branch, Surveyor-General's Office	14, Wood Street	ditto
Nath, Rakhal Chandra	Assistant, D N Biswas & Co	10, Dalhousie Square, East	ditto
Niyogi, B B	Head Clerk, Britannia Biscuit Co, Ld	Stephen House	ditto
Niyogi, Chandra Bhusan	Assistant, Port Office, Calcutta	15-1, Strand Road	ditto
Niyogi, Narayan Chandra	Clerk, Turner, Morrison & Co, Ld	6, Lyons Range	ditto
Niyogi, Narendra Nath	Demonstrator, Presidency College	86-1, College Street	ditto
Niyogi, Ruchirendra	Assistant, Bengal Secretariat, Revenue Department	Writers' Buildings	ditto
Nurullah, Md Abul Ula	Assistant Maulvi, Calcutta Madrasah	19, Wellesley Square	Mahomedan

O

Om, Prakash, B sc	Clerk, C C M's Office, E I R	E I R House	Hindu
Oonvala, Sorabji Muncharji	Assistant, Bengal Secretariat, Commerce Department	Writers' Buildings	Zoroastrian

No.	Names.	Style or calling.	Residence or place of business.	Religion.
	P			
	Pal, Adwaita Charan ..	.. Traveller, Blackie & Son (India), Ld	.. 285-11, Bowbazar Street	Hindu
	Pal, Annada Charan ..	.. Assistant, Office of the I-G of Police	.. Writers' Buildings	ditto
	Pal, Arabinda	.. Clerk, Jardine, Skinner & Co	.. 4, Clive Row	ditto
	Pal, Ashutos	.. Assistant, Controller's Office, Calcutta University ..	.. Senate House	ditto
	Pal, Ashutos	.. Clerk, C O S Office, E I R	.. E I R House	ditto
	Pal, Ashwini Kumar ..	.. Estimator, Western Electrical Division	.. Writers' Buildings	ditto
	Pal, Batakrishna ..	.. Clerk, National Bank of India, Ld	.. 104, Clive Street	ditto
	Pal, Bhupendra Nath ..	.. Assistant, Brooke Bond India, Ld	.. 2, Metcalf Street	ditto
	Pal, Bihari Lal ..	.. Assistant, Accounts Department, Calcutta Corporation	.. Municipal Office	ditto
	Pal, Bijaya Krishna ..	.. Assistant, Mackinnon, Mackenzie & Co	.. 16, Strand Road	ditto
	Pal, C C	.. Clerk, C E S C, Ld	.. Victoria House	ditto
	Pal, Debendra Nath ..	.. Clerk, Gillanders, Arbuthnot & Co	.. 8, Clive Street	ditto
	Pal, Dhirendra Nath ..	.. Sub-Head, C A O's Office, E I R	.. E I R House	ditto
	Pal, Dulal Krishna, MSC	.. Assistant, Accountant-General's Office, Bengal ..	.. Treasury Buildings	ditto
	Pal, Harendra Chandra, MA, BL	.. Assistant, Calcutta Insurance, Ld	.. 86, Clive Street	ditto
	Pal, Hari Charan ..	.. Clerk (Coal Accounts), Port Commissioners' Office ..	.. Strand Road . ..	ditto

Pal, Haridas	Assistant Superintendent, Accounts Office, E B R	3, Kaylaghat Street		ditto
Pal, Hem Chandra	Clerk, Ralli Brothers, Ld	16, Hare Street		ditto
Pal, Jashoda Nandan	Assistant, Mackinnon, Mackenzie & Co	16, Strand Road		ditto
Pal, Jyotish Chandra	Cash Clerk, Port Commissioners' Office	Strand Road		ditto
Pal, Khagendra Nath	Clerk, C A O's Office, E I R	E I R House		ditto
Pal, Krishna Lal	Assistant, Accountant-General's Office, Bengal	Treasury Buildings		ditto
Pal, Lakshminarayan	Head Draftsman, W W Extension, Calcutta Corporation	Municipal Office		ditto
Pal, Lalit Mohan	Assistant, Brooke Bond (India), Ld	2, Metcalfe Street		ditto
Pal, Makhan Lal, BA	Assistant, Accountant-General's Office, Bengal	Treasury Buildings		ditto
Pal, Nagendra Nath, BA	Assistant, Accountant-General's Office, Bengal	Treasury Buildings		ditto
Pal, Paritos	Assistant, Balmer, Lawrie & Co, Ld	103, Clive Street		ditto
Pal, Phanindra Nath	Assistant, Accountant General's Office, Bengal	Treasury Buildings		ditto
Pal, Prabodh	Assistant, Macneill & Co	2, Fairlie Place		ditto
Pal, Prakash Chandra	Assistant, Bengal Secretariat, Police Department	Writers' Buildings		ditto
Pal, Prakash Chandra	Estimator, Governor's Estate Division	Government House		ditto
Pal, Pravas Chandra	Assistant, Calcutta University	Senate House		ditto
Pal, Rakhal Chandra	Assistant, Education Department, Bengal Secretariat	Writers' Buildings		ditto
Pal, Ramani Mohan	Drawing Instructor, University College	92, Upper Circular Road		ditto

No.	Names.	Style or calling.	Residence or place of business.	Religion.
	Pal, Ratan Krishna	.. Clerk, Harrisons & Crosfield, Ld	.. 6, Church Lane	Hindu
	Pal, Satish Chandra ..	.. Cashier, Mackintosh Burn, Ld	.. 8, Clive Street	ditto
	Pal, Satish Chandra, BL	.. Offg. Accountant, Accountant-General's Office, Bengal	.. Treasury Buildings	ditto
	Pal, Satish Chandra ..	.. Assistant, Brooke Bond (India), Ld	.. 2, Metcalfe Street	ditto
	Pal, Shailendra Bhusan	.. Accountant, Ex-Engineer's Office, City Division, P W D	.. Writers' Buildings	ditto
	Pal, Sharat Chandra ..	.. Clerk, Lloyds Bank, Ld	.. 101-1, Clive Street	ditto
	Pal, Shashanka Shekhar ..	.. Clerk, Ralli Bros, Ld	.. 16, Hare Street	ditto
	Pal, Shricharan ..	.. Cashier, Marshall Sons & Co (India), Ld	.. 99, Clive Street	ditto
	Pal, Subodh Chandra ..	.. Assistant, Office of the Controller of Currency ..	.. Treasury Buildings	ditto
	Pal, Sudhish Chandra ..	.. Assistant, Brooke Bond (India), Ld	.. 2, Metcalfe Street	ditto
	Pal, Tarini Charan ..	.. Court Clerk, Art Section, Indian Museum ..	.. 28, Chowringhee	ditto
	Palit, Ashutos ..	.. Clerk, Place, Siddons & Gough	.. 6, Lyons Range	ditto
	Palit, Bhupati Nath, MA, BT	.. Assistant Master, Hindu School	.. College Square	ditto
	Palit, Haridas ..	.. R D Inspector, E B R	.. 3, Kaylaghat Street	ditto
	Palit, Satish Chandra ..	.. Stenographer, C M E's Office, E I R	.. E I R House	ditto
	Panda, M L M ..	.. Assistant, Mackinnon; Mackenzie & Co	.. 16, Strand Road	Christian
	Pande, Bal Dutt ..	.. Clerk, Allahabad Bank, Ld	.. 6, Royal Exchange Place.. ..	Hindu

Pandit, Dabendra N	Stenographer, Bengal Chamber of Commerce	2, Clive Street	ditto
Parakh, D J	Assistant, Imperial Chemical Industries (India), Ld ..	18, Strand Road	Zoroastrian
Pardivala, Ruttonshaw Shapoorjee ..	Traveller, Carr & Co, Ld	3, Waterloo Street	ditto
Parrab, Ganpatrao Withoba ..	Artist, *Statesman*, Ld	Statesman House	Hindu
Pasricha, Tek Chand ..	Assistant Superintendent, C O S Office, E I R	E I R House	ditto
Pathak, Abinash Chandra ..	Clerk, Turner, Morrison & Co, Ld	6, Lyons Range	ditto
Pathak, Kalikrishna, BA	Assistant, Calcutta University	92, Upper Circular Road	ditto
Pathak, Lokendra Nath, MA ..	Assistant, Calcutta University	Senate House ..	ditto
Pathak, M N	Clerk, Burmah-Shell Co of India, Ld	Hongkong House	ditto
Pathak, Nanilal	Assistant, Bengal Secretariat, L S-G Department	Writers' Buildings	ditto
Pathak, Prashanta Kumar ..	Head Stenographer, Accounts Department, Port Commissioners' Office	Strand Road	ditto
Pathak, Ramendra Nath ..	Stenographer, Imperial Chemical Industries (India), Ld ..	18, Strand Road	ditto
Pathak, Shailendra Nath ..	Assistant, Calcutta University	Senate House	ditto
Pathak, Shakti Kumar, MA ..	Cashier, Mutual Indemnity and Finance Corporation (India), Ld	32-1, Dalhousie Square, South ..	ditto
Pathak, Shaktisudha	Assistant, Commercial Intelligence Department	1, Council House Street	ditto
Patla, Sarveshwar	Estimator, Executive Engineer's Office, Canals Division ..	Treasury Buildings	ditto
Patra, M L	Clerk, P S Office, E I R	E I R House	ditto

No.	Names.	Style or calling.	Residence or place of business.	Religion.
	Patra, Narayan Chandra ..	Assistant Printer, *Statesman*, Ld	.. Statesman House	Hindu
	Patra, S C	Assistant, Imperial Record Department	.. 3, Government Place, West ..	ditto
	Piplai, Shivaprasad	Clerk, Agency Office, E I R	.. E I R House	ditto
	Pramanik, Atulya Kumar ..	Assistant, Calcutta Improvement Trust	.. 5, Clive Street	ditto
	Pramanik, Dwijendra Nath ..	Clerk, Landale & Clark, Ld	.. 11, Clive Street	ditto
	Pramanik, Hem Chandra ..	Assistant, Agriculture and Industries Department, Bengal ..	Writers' Buildings	ditto
	Pramanik, Jiban Krishna ..	Assistant, Accountant-General's Office, Bengal ..	.. Treasury Buildings	ditto
	Pramanik, Kshirode Kumar ..	Assistant, Office of the Inspector-General of Prisons, Bengal ..	Writers' Buildings	ditto
	Pramanik, Ramendra Gopal, BA ..	Establishment Clerk, Accounts Office, E B R ..	.. 3, Kaylaghat Street	ditto
	Prasad, Bhagwati	Clerk, C O P S Office, E I R	.. E I R House	ditto
	Prasad, Gopal, BSC	Demonstrator, Scottish Church College ..	.. 4, Cornwallis Street	ditto
	Puri, Mukut Bihari Lal	Clerk, Allahabad Bank, Ld	.. 6, Royal Exchange Place ..	ditto
	Pyne, B N	Chief Clerk, Indian and Eastern Engineer Co, Ld ..	.. 5, Mission Row	ditto
	Pyne, Nitai Chand ..	Clerk, David Sassoon & Co	.. 4, Lyons Range	ditto
	Pyne, Pulin Bihari	Engineer, Martin & Co	.. 12, Mission Row	ditto
	Pyne, Srikrishna	Chief Clerk, William Jacks & Co	.. 10, Clive Street	ditto
	Pyne, Umesh Ch	Head Clerk, Stores Department, E B R ..	.. 3, Kaylaghat Street	ditto

Q

Quadari, Manzura (Maulvi)	Assistant, Legislative Department, Bengal	Council House		Mahomedan
Quader, Shaikh Abdul (Maulvi), BA	Assistant, Bengal Secretariat, Police Department	Writers' Buildings		ditto
Quamarain, A L, BA (Oxon)	S A S Apprentice, A-G's Office, Bengal	Treasury Buildings		ditto
Quaraishi, Mahomed Serajul Huq (Maulvi), BL	Assistant, Bengali Translator's Office	Writers' Buildings		ditto

R

Raghavan, Parambath Kuppa	Chief Clerk, Standard Telephones & Cables, Ld	C-2, Clive Buildings		Hindu
Rafiq, Mahomed	Assistant, Office of the Geological Survey of India	27, Chowringhee		Mahomedan
Raha, R O, MA	Inspector of Messes, Calcutta University	Senate House		Christian
Rahim, Abdur	Assistant Maulvi, Imperial Record Department	3, Government Place, West		Mahomedan
Rahim, Syed Mahbubur, BA, BT	Head Master, Woodburn M E School	24, Mussalmanpara Lane		ditto
Rahim, Mahomed Zohadur (Maulvi), BA	Assistant, Bengal Secretariat, Finance Department	Writers' Buildings		ditto
Rahman, Altafar Haji	Assistant, Surgeon-General's Office, Bengal	Writers' Buildings		ditto
Rahman, Azizur (Maulvi)	Assistant, Bengal Secretariat Record Room	Writers' Buildings		ditto
Rahman, Fazlar	Inspector, License Department, Calcutta Corporation	Municipal Office		ditto
Rahman, Khalilur (Maulvi), BSC BT	Assistant Master, Calcutta Madrasah	19, Wellesley Square		ditto
Rahman, Khalilur, BA	Assessing Inspector, Calcutta Corporation	Municipal Office		ditto

No.	Names.	Style or calling.	Residence or place of business.	Religion.
	Rahman, Mahammad Abdur ..	Assistant, Bengal Secretariat, Education Department ..	Writers' Buildings	Mahomedan
	Rahman, Matiur, M COM ..	Examiner of Accounts, Income Tax Office	3, Government Place, West ..	ditto
	Rahman, Mahammad Rafique, MA ..	Assistant, Calcutta University	.. Senate House	ditto
	Rahman, Md. Wazihur (Maulvi), BA	Assistant, Bengal Secretariat, Appointment Department ..	Writers' Buildings	ditto
	Rahman, Obaidur	Assistant, Andrew Yule & Co, Ld	.. 8, Clive Row	ditto
	Rahman, Shafiur	Assistant, Office of the I-G of Registration, Bengal ..	.. Writers' Buildings	ditto
	Rahman, Shah Kalimur (Maulvi), MA	Lecturer, University College	.. Senate House	ditto
	Rajagopal, T B, MA	Office Superintendent, General Branch, Agent's Office, E B R ..	3, Kaylaghat Street	Hindu
	Rajagopalan, Annaswami Iyengar, BA	Assistant, Tata Iron & Steel Co, Ld	.. 100, Clive Street	ditto
	Rajagopalan, Visnanipet Narain ..	Clerk, C A's Office, E I R	.. E I R House	ditto
	Rakshit, Debendra Lal	Clerk, Booking Section, Port Commissioners' Office ..	Strand Road	ditto
	Rakshit, Gour Chandra	Clerk, Gillanders, Arbuthnot & Co	.. 8, Clive Street	ditto
	Rakshit, Hridaya Ranjan ..	Clerk, Agency Office, E I R	.. E I R House	ditto
	Rakshit, Kalikrishna, BT ..	Assistant Master, Hindu School	.. College Square	ditto
	Rakshit, Pratap Chandra ..	Assistant, Calcutta University	.. 92, Upper Circular Road	ditto
	Rakshit, Upendra Nath	Assistant, North British & Mercantile Insurance Co, Ld ..	101-1, Clive Street	ditto
	Ramabadran, Gopalachari ..	Clerk, *Statesman*, Ld	.. Statesman House	ditto

Raman, A V, MA	Assistant, Office of the Controller of Currency	Treasury Buildings	ditto
Raman, Ganapathi Venkata ..	Assistant, Blackwood Blackwood & Co	4, Lyons Range	ditto
Raman, V R Sundra, BA ..	Inspector, Traffic Department, E B R	3, Kaylaghat Street	ditto
Ramaswami, Madura Subramania ..	Clerk, Gillanders, Arbuthnot & Co	8, Clive Street	ditto
Ramaswami, T S	Clerk, Burmah-Shell Co of India, Ld	Hongkong House	ditto
Ramaswami, V	Assistant, Remington Rand Inc	3, Council House Street	ditto
Ramaswamia, Venkatasubhiah ..	Head Clerk, Bengal United Service Club	29, Chowringhee	ditto
Ramchandran, T S	Apprentice, Oriental Government Security Life Assurance Co, Ld	2, Clive Row	ditto
Ramdurai, Venkatisaiyar ..	Assistant, Andrew, Yule & Co, Ld	8, Clive Row	ditto
Ramiah, Pathai Venkata Narayana Iyer	Accountant, United Steel Companies (India), Ld ..	4, Lyons Range	ditto
Rangaswami, M C	Stenographer, Shree Radhakrishna Sugar Mills, Ld	138, Harrison Road	ditto
Rangaswami, M S, BA	Accountant, Accounts Department, E B R	3, Kaylaghat Street	ditto
Rangaswami, S N, BA	Clerk, Lloyds Bank, Ld	101-1, Clive Street	ditto
Rao, Alse Venkateshwara ..	Clerk, Northern Assurance Co, Ld	7, Hare Street	ditto
Rao, Chickaballapur Lakshmana ..	Assistant, Ludlow Jute Co, Ld	7, Royal Exchange Place ..	ditto
Rao, Krishnasamy Venkoba ..	Stenographer, C E's Office, E I R	E I R House	ditto
Rao, Mukund	Clerk, Burmah-Shell Co of India, Ld	Hongkong House	ditto
Rao, N Srinivasa	Foreman, Testing Department, C E S C, Ld	Viet	ditto

No.	Names.	Style or calling.	Residence or place of business.	Religion.
	Rao, Rama Seshagiri	Stenographer, Office of H M's Senior Trade Commissioner in India	4, Fairiile Place	Hindu
	Rao, Sanjiva	Engineer, Octavius Steel & Co, Ld	14, Old Court House Street ..	ditto
	Rao, Tirukalikunram Devalgar Nagoji	Assistant, Andrew, Yule & Co, Ld	8, Clive Row	ditto
	Rao, Vadlamoni Parthasarathy ..	Stenotypist, *Statesman*, Ld	Statesman House	ditto
	Rashid, Maulvi Abdur	Assistant, Bengal Secretariat, L S-G Department	Writers' Buildings	Mahomedan
	Rashid, Abdur (Maulvi)	Clerk, Office of the Inspector of Schools, Presidency Division ..	40-1A, Free School Street ..	ditto
	Rashid, Harun-ur-	Assistant, Benga! Secretariat, Education Department ..	Writers' Buildings	ditto
	Rasul, Shaik Hamid, BA ..	Assistant, Bengal Secretariat, Revenue Department ..	Writers' Buildings	ditto
	Ray, Abanimohan, MA ..	Lecturer, City College	102-1, Amherst Street	Hindu
	Ray, Abanimohan	Accountant, Dredger Division	Charnock Place	ditto
	Ray, A. K	Export Clerk, B I S N Co, Ld	8, Strand Road	ditto
	Ray, Amarendra Nath, MSC ..	Head Assistant (Lapse), Unique Assurance Co, Ld	10, Canning Street	ditto
	Ray, Amulya Ratan, BL ..	Assistant Superintendent, Unique Assurance Co, Ld ..	10, Canning Street	ditto
	Ray, Amulya Ratan	2nd Personal Clerk to 1st Deputy Executive Officer, Calcutta Corporation	Municipal Office	ditto
	Ray, Ananta Krishna	Draftsman, Surveyor-General's Office	13, Wood Street	ditto
	Ray, Ananta Kumar	Assistant, Planters' Stores and Agency Co, Ld	11, Clive Street	ditto
	Ray, Anil Chandra, No I ..	Assistant, Accountant-General's Office, Bengal	Treasury Buildings	ditto

Ray, Anil Chandra ..	.. Engineer, F & C Osler Ld	.. 12, Old Court House Street ..	ditto
Ray, Anil Chandra, MSC, No. II	.. Offg. Accountant, Accountant-General's Office, Bengal	.. Treasury Buildings	ditto
Ray, Anil Kumar ..	.. Clerk, Agency, E I R	.. E I R House	ditto
Ray, Annada Charan, BL	.. Inspector, License Department, Calcutta Corporation	.. Municipal Office	ditto
Ray, Anupam ..	.. Clerk, Collection Deptt, Calcutta Corporation ..	.. Municipal Office	ditto
Ray, A R	.. Clerk, Burmah-Shell Co, of India, Ld	.. Hongkong House	ditto
Ray, Baldev H ..	.. Assistant, W T Henley's Telegraph Works Co, Ld ..	.. Old Court House Corner	ditto
Ray, Bankim Chandra, LT	.. Assistant Master, Hindu School	.. College Square	ditto
Ray, Bankim Chandra	.. Assistant, Calcutta University	.. Senate House	ditto
Ray, B B	.. Audit Inspector, Port Commissioners' Office ..	.. Strand Road	ditto
Ray, Bhabani Shankar	.. Inspector, Imperial Chemical Industries (India), Ld	.. 18, Strand Road	ditto
Ray, Bhabani Shankar	.. Clerk, Pre-Audit, Port Commissioners' Office ..	.. Strand Road	ditto
Ray, Bhabataran, BSC ..	.. Assistant, Bengal Secretariat, Political Department	.. Writers' Buildings	ditto
Ray, Bhagwat ..	.. Clerk, C A O's Office, E I R	.. E I R House	ditto
Ray, Bhuban Mohan ..	.. Accountant, Bengal United Service Club ..	.. 29, Chowringhee	ditto
Ray, Bhudeb Chandra ..	.. Assistant, Martin & Co	.. 12, Mission Row	ditto
Ray, Bhusan Chandra ..	.. Head Clerk, Office of the Superintendent, Governor's Estate, Bengal	.. 9, Government Place, North ..	ditto
Ray, Bhusan Chandra ..	.. Reader, Government of India Press	.. 8, Hastings Street	ditto

No.	Names.	Style or calling.	Residence or place of business.	Religion.
	Ray, Bilas Chandra ..	.. Head Clerk, Land Acquisition Office	5, Bankshall Street	Hindu
	Ray, Binaya Bhusan ..	.. Head Estimator, Office of the Superintending Engineer, S-W Circle, P W D	Treasury Buildings	ditto
	Ray, Binaya Bhusan ..	.. Clerk, Mathematical Instrument Branch, Surveyor-General's Office	15, Wood Street	ditto
	Ray, Bipin Bihari, MA ..	.. Inspector, Collection Department, Calcutta Corporation ..	Municipal Office	ditto
	Ray, Biraja Kanta ..	.. Assistant, Accounts Department, Calcutta Corporation ..	22, Mirzapore Street	ditto
	Ray, Biraj Kumar, BA ..	. Sub-Head, C A O's Office, E I R	E I R House	ditto
	Ray, Birendra Narayan ..	.. Cashier, Bengal Chemical and Pharmaceutical Works, Ld ..	31, Chittaranjan Avenue, South ..	ditto
	Ray, B K	.. Assistant, G E C (India), Ld	Magnet House, Chittaranjan Avenue	ditto
	Ray, Brojendra Chandra	.. Overseer, Suburban Division, P W D	Writers' Buildings	ditto
	Ray, Debendra Nath ..	.. Clerk, Traffic Department, E B R	3, Kaylaghat Street	ditto
	Ray, Deva Kumar ..	.. Sr Assistant, Explosives Office	1, Council House Street	ditto
	Ray, Dhirendra Chandra, MSC	.. Professor, Vidyasagar College	39, Shankar Ghose Lane	ditto
	Ray, Dhirendra Nath ..	.. Estimator, City Division, P W D	Writers' Buildings	ditto
	Ray, Dhirendra Nath ..	.. Despatcher, Calcutta Improvement Trust ..	5, Clive Street ..	ditto
	Ray, Dhirendra Nath ..	.. Assistant, Mackinnon, Mackenzie & Co	16, Strand Road	ditto
	Ray, Dhirendra Nath ..	.. Clerk, Cox & Kings (Agents), Ld	5, Bankshall Street ..	ditto
	Ray, Dwijendra Nath ..	.. Assessor, Income-tax Office	6, Esplanade, East	ditto

Ray, Girija Prasad ..	.. Accountant, Valvoline Oil Co	B-5, Clive Buildings ..	..	ditto
Ray, Gopal Chandra ..	.. Accounts Clerk, Executive Engineer's Office, Suburban Division, P W D	Writers' Buildings ..	..	ditto
Ray, Gour Chandra, BSc (Eng)	.. Lecturer, Calcutta Technical School ..	110, Surendra Nath Banerjee Street ..		ditto
Ray, Gour Gopal, BA, BT	.. Assistant Master, Hare School	87, College Street ..		ditto
Ray, Haridas ..	.. Assistant, Sun Life of Canada	12, Dalhousie Square, East ..		ditto
Ray, Haridas ..	.. Assistant, Commercial Intelligence Department	1, Council House Street ..	..	ditto
Ray, Haridas ..	.. Establishment Clerk, C M O's Office, E I R	E I R House ..	..	ditto
Ray, Haripada ..	.. Head Clerk, Watch and Ward Department, E I R	E I R House ..	..	ditto
Ray, Hemchandra ..	.. Assistant Accountant, Engineer's Office, District No III, Calcutta Corporation	Hogg Street ..	..	ditto
Ray, Himangshu Bhusan	.. Clerk, C E E's Office, E I R	E I R House	..	ditto
Ray, Ishan Chandra, MA	.. Teacher, City School	13, Mirzapur Street ..	..	Brahmo
Ray, Jagannathdeb, BA ..	.. Assistant, Controller's Office, Calcutta University	Senate House ..	..	Hindu
Ray, Jashendra Nath ..	.. Assistant, Commercial Intelligence Department, India ..	1, Council House Street ..		ditto
Ray, Jatindra Mohan, BSc	.. Assistant, Bengal Public Health Laboratory	Chittaranjan Avenue ..	..	ditto
Ray, Jatindra Nath ..	.. Clerk, Share Dept, Imperial Bank of India	Strand Road ..	..	ditto
Ray, Jatindra Nath ..	.. Assistant, Planters Stores & Agency Co, Ld	11, Clive Street ..	..	ditto
Ray, Jatindra Nath ..	.. Accounts Clerk, Williamson, Magor & Co	4, Mangoe Lane ..	..	ditto
Ray, Jitendra Nath ..	.. Assistant, Office of the Controller of Currency	Treasury Buildings ..	..	ditto

No.	Names.	Style or calling.	Residence or place of business.	Religion.
	Ray, J N	.. Assistant Bullion Keeper, Calcutta Mint ..	.. 47, Strand Road	Hindu
	Ray, Jnanendra N ..	.. Assistant Cashier, Octavius Steel Co, & Ld ..	.. 14, Old Court House Street ..	ditto
	Ray, Jogesh Chandra ..	.. Assistant, Port Office, Calcutta ..	.. 15-1, Strand Road	ditto
	Ray. Kali Prasanna ..	.. Assistant, Office of the Director of Public Health, Bengal ..	Writers' Buildings	ditto
	Ray, Keshab Chandra ..	.. Assistant, Accountant-General's Office Bengal ..	.. Treasury Buildings	ditto
	Ray, Khagendra Nath ..	.. Clerk, Accounts Department, Imperial Bank of India	.. Strand Road	ditto
	Ray, Krishna Chandra ..	.. Ledger-keeper, Williamson Magor & Co	.. 4, Mangoe Lane	ditto
	Ray, Kshetra Nath ..	.. Section Superintendent, Engineer's Office, E B R ..	.. 3, Kaylaghat Street	ditto
	Ray, Kshitish Chandra, No I, BA ..	Assistant, Accountant-General's Office, Bengal ..	.. Treasury Buildings	ditto
	Ray Kshitish Chandra, No II, MA ..	Assistant, Accountant-General's Office, Bengal ..	.. Treasury Buildings	ditto
	Ray, Lalit Mohan, BA ..	.. Assistant, Accounts Department, Calcutta Corporation	.. Municipal Office	ditto
	Ray, Lalit Mohan, B COM	.. Accounts Clerk, Executive Engineer's Office, Western Electrical Division	Writers' Buildings	ditto
	Ray, Manick Lal ..	.. Assistant, 2nd grade, Imperial Bank of India ..	.. Strand Road	ditto
	Ray, Mani Madhab ..	.. Audit Clerk, E B R	.. 3, Kaylaghat Street ..	ditto
	Ray, Manindra Bhusan ..	.. Assistant, Sun Life of Canada	12, Dalhousie Square	ditto
	Ray, Manmatha Nath, BL	.. Assistant, Accountant-General's Office, Bengal ..	.. Treasury Buildings	ditto
	Ray, Meghendra Lal, BA	.. Inspector, License Department, Calcutta Corporation	Municipal Office	ditto

Ray, Nagendra Nath ..	.. Assistant, Office of the Director of Public Health, Bengal	..	Writers' Buildings ..	.. ditto
Ray, Nalini Bhusan, BA ..	.. Assistant, Bengal Secretariat Record Room	..	.. Writers' Buildings ..	.. ditto
Ray, Narayan Das ..	.. Stenographer, License Department, Calcutta Corporation		Municipal Office ..	.. ditto
Ray, Narendra Krishna ..	.. Assistant, Bengal Secretariat, E&S-G Department	..	.. Writers' Buildings ..	.. ditto
Ray, Naresh Chandra ..	.. Clerk, Agency Office, E I R ..	..	.. E I R House ..	.. ditto
Ray, Naresh Chandra, MA ..	Lecturer, City College ..	..	.. 102-1, Amherst Street ..	.. ditto
Ray, Niranjan ..	.. Assistant, Dodge & Seymour, Ld ..	..	.. Tower House, Chowringhee Square ..	ditto
Ray, Nripendra Nath ..	.. Clerk, Agency Office, E I R ..	..	.. E I R House ..	.. dittd
Ray, Panchanan, BL ..	.. Assistant, Accountant-General's Office, Bengal	..	.. Treasury Buildings ..	.. ditto
Ray, Panchanan ..	.. Assistant, Macneill & Co ..	..	.. 2, Fairlie Place ..	.. ditto
Ray, Paresh Nath, BA ..	.. Assistant, Map Record Office, Survey of India	..	.. 13, Wood Street ..	.. ditto
Ray, P C ..	.. Assistant, Mackinnon, Mackenzie & Co ..	..	.. 8, Strand Road ..	.. ditto
Ray, Phanindra Nath ..	.. Assistant, Superintending Engineer's Office, Presy Circle, P W D		Writers' Buildings ..	.. ditto
Ray, Phanindra Nath, BA ..	Assistant, Accountant-General's Office, Bengal	..	.. Treasury Buildings ..	.. ditto
Ray, P K	.. Assistant, Guest, Keen, Williams, Ld	..	.. 7, Council House Street ..	.. ditto
Ray, Prabodh Prakash ..	.. Stenographer, Bengal Secretariat, Finance Department		.. Writers' Buildings ..	.. ditto
Ray, Prafulla Chandra ..	.. Assistant, Burn & Co, Ld	..	.. 12, Mission Row ..	.. ditto
Ray, Prafulla Ratan ..	.. Assistant, Birla Bros. Ld	..	.. 8, Royal Exchange Place	.. ditto

No.	Names.	Style or calling.	Residence or place of business.	Religion.
	Ray, Prahlad Chandra ..	.. Section Holder, Government of India Press ..	.. 8, Hastings Street	Hindu
	Ray, Prashanta Chandra, BA	.. Clerk, C C M's Office, E I R	.. E I R House	ditto
	Ray, Premangshu, BSc ..	.. Assistant, A-G's Office, Bengal	.. Treasury Buildings	ditto
	Ray, Prem Ranjan ..	.. Accountant and Cashier, La Martiniere	.. 11, Loudon Street	ditto
	Ray, Rabindra Nath ..	.. Assistant, Bengal Secretariat, Revenue Department	.. Writers' Buildings	ditto
	Ray, Rajendra Nath ..	.. Assistant, Kettlewell, Bullen & Co, Ld	.. 21, Strand Road	ditto
	Ray, Rajkumar ..	.. Head Clerk, Traffic Department, E B R	.. 3, Kaylaghat Street	ditto
	Ray, Rampada ..	.. Assistant, Brooke Bond (India), Ld	.. 2, Metcalfe Street	ditto
	Ray, Ram Lakshman ..	.. Stenographer, Office of the Controller of Purchase, Indian Stores Dept	6, Esplanade, East	ditto
	Ray, R C ..	.. Assistant, Mackinnon, Mackenzie & Co	.. 8, Strand Road	ditto
	Ray, R K ..	.. Senior Partner, The Eastern Merchants	14, Old Court House Lane ..	ditto
	Ray, Rabati Mohan ..	.. Assistant Controller's Office, Calcutta University ..	.. Senate House	ditto
	Ray, R N, BSc ..	.. Head Assistant, India Equitable Insurance Co, Ltd ..	.. 102, Clive Street	ditto
	Ray, Satindra Nath ..	.. Clerk, National Bank of India, Ld ..	.. 104, Clive Street	ditto
	Ray, Satish Chandra, BA	.. Articled Clerk, Tarmaster & Co	.. 6, Old Post Office Street ..	ditto
	Ray, Satyananda ..	Professor, Bangabasi College	.. 25/1, Scott Lane	ditto
	Ray, Satyendra Nath ..	.. Examiner of Stores, Indian Stores Department (Inspection)	.. 6, Esplanade, East	ditto

Ray, S B	Stenographer, Associated Electrical Industries (India), Ld	A-3, Clive Buildings		ditto
Ray, Shachindra Nath	Clerk, Lloyds Bank, Ld	101-1, Clive Street		ditto
Ray, Shachindra Nath	Assistant, Accountant-General's Office, Bengal	Treasury Buildings		ditto
Ray, Shachindra Nath, BA	Assistant, Patent Office	1, Council House Street		ditto
Ray, Sailendra Nath	Section Holder, Government of India Press	8, Hastings Street		ditto
Ray, Shantinidhan	Salesman, Texas Co (India), Ld	11, Esplanade, East		ditto
Ray, Sharat Chandra	Assistant, Accountant-General's Office, Bengal	Treasury Buildings		ditto
Ray, Sharat Chandra	Assistant, Macneill & Co	2, Fairlie Place		ditto
Ray, Sharat Kumar	Assistant, Zoological Survey of India	Indian Museum		ditto
Ray, Sasanka Shekhar	Clerk, Ralli Bros, Ld	16, Hare Street		ditto
Ray, Shrish Chandra	Inspector, Collection Department, Calcutta Corporation	Municipal Office		ditto
Ray, Sitanath, BA	Reader, Corporation Press	Municipal Office		ditto
Ray, S K	Clerk, Office of the Chief Mining Engineer, Railway Board	1, Council House Street		ditto
Ray, Sudhindra Nath, BA	Examiner of Accounts, Income-tax Office	3, Government Place, West		ditto
Ray, Sudhir Kumar, MSC	Demonstrator, Vidyasagar College	59, Shanker Ghose Lane		ditto
Ray, Sudhir Kumar	Accountant, English Electric Co, Ld	D-4, Clive Buildings		ditto
Ray, Surendra Chandra, BA	Clerk, Office of the Controller of Army Factory Accounts	6, Esplanade, East		ditto
Ray, Surendra Kumar	Assistant, Asiatic Society of Bengal	1, Park Street		ditto

No.	Names.	Style or calling.	Residence or place of business.	Religion.
	Ray, Surendra Nath ..	Clerk, Calcutta Stock Exchange Association, Ld ..	.. 7, Lyons Range	Hindu
	Ray, Suresh Chandra	Clerk, T M's Department, Port Commissioners' Office	.. Strand Road	ditto
	Ray, Suresh Chandra	Librarian, Zoological Survey of India	.. Indian Museum	ditto
	Ray, Sushil Chandra	Assistant, Sun Life of Canada	.. 12, Dalhousie Square, East ..	ditto
	Ray, T N	Engraver, Calcutta Mint	.. 47, Strand Road	ditto
	Ray, Upendra Nath	Clerk, Shaw, Wallace & Co	.. 4, Bankshall Street	ditto
	Ray Barman, Binaya Kumar, BSc ..	Assistant, Accountant-General's Office, Bengal ..	.. Treasury Buildings	ditto
	Ray Chaudhuri, A K	Clerk, Burmah-Shell Co of India, Ld	.. Hongkong House	ditto
	Ray Chaudhuri, A K	Audit Inspector, Port Commissioners' Office ..	.. Strand Road	ditto
	Ray Chaudhuri, Akshaya Kumar ..	Assistant, Calcutta University	.. Senate House	ditto
	Ray Chaudhuri, Amal Krishna ..	Assistant, Accountant-General's Office, Bengal ..	.. Treasury Buildings ..	ditto
	Ray Chaudhuri, A N	Clerk, C E S C, Ld	.. Victoria House	ditto
	Ray Chaudhuri, Anil Kumar ..	Assistant, Balmer, Lawrie & Co, Ld	.. 103, Clive Street	ditto
	Ray Chaudhuri, Anukul Chandra ..	Accounts Clerk, E B R	.. 3, Kaylaghat Street	ditto
	Ray Chaudhuri, Anukul Chandra ..	Assistant, Calcutta University	.. Senate House	ditto
	Ray Chaudhuri, Atul K	Ledger-keeper, Balmer, Lawrie & Co, Ltd ..	.. 103, Clive Street	ditto
	Ray Chaudhuri, Biresh Ch, BA ..	Con Overseer, Calcutta Corporation, D E I ..	79, Cornwallis Street	ditto

Ray Chaudhuri, Dhirendra C	.. Assistant, Bird & Co	.. .. ..	.. 1-1, Clive Street	.. .. ditto
Ray Chaudhuri, Dhirendra Nath	.. Head Clerk, Imperial Tobacco Co of India, Ld	..	.. 37, Chowringhee	.. .. ditto
Ray Chaudhuri, Gourdās	.. Accounts Clerk, Ludlow Jute Co, Ld	.. ..	7, Royal Exchange Place	.. .. ditto
Ray Chaudhuri, Hemendra	.. Superintendent, Mullik Ghat W W, Calcutta Corporation		.. Municipal Office	.. .. ditto
Ray Chaudhuri, Jatindra Nath	.. Articled Clerk, Tarmaster & Co	.. ..	.. 6, Old Post Office Street	.. ditto
Ray Chaudhuri, Karali Charan, BA	.. Assistant, Accountant-General's Office, Bengal		.. Treasury Buildings	.. .. ditto
Ray Chaudhuri, Kashi Prasad	.. Assistant, Calcutta University	.. ..	.. Senate House	.. .. ditto
Ray Chaudhuri, Krishna Bihari, MA, BL	Assistant, Controller's Office, Calcutta University		.. Senate House	.. .. ditto
Ray Chaudhuri, Krishna Kinkar	.. Clerk, Collection Department, Calcutta Corporation	..	.. Municipal Office	.. .. ditto
Ray Chaudhuri, Manindra Nath	.. Assistant, Calcutta Improvement Trust	.. ..	.. 5, Clive Street	.. .. ditto
Ray Chaudhuri, Manmohan, MA, BT	.. Head Master (Model), Calcutta Training School	..	.. 8, European Asylum Lane	.. ditto
Ray Chaudhuri, Mukul Mohan, BA	.. Assistant, Accountant-General's Office, Bengal	..	.. Treasury Buildings	.. .. ditto
Ray Chaudhuri, Mukunda Lal	.. Clerk, Traffic Department, E B R	..	.. 3, Kaylaghat Street	.. .. ditto
Ray Chaudhuri, Nalin Bihari	.. Assistant, Accountant-General's Office, Bengal	..	.. Treasury Buildings	.. .. ditto
Ray Chaudhuri, Nikhil Chandra, MSC	Offg Accountant, Accountant-General's Office, Bengal		.. Treasury Buildings	.. .. ditto
Ray Chaudhuri, Nirmal K	.. Genl Store-keeper, Govt of India Press	.. ..	.. 8, Hastings Street	.. .. ditto
Ray Chaudhuri, Nripendra Nath, MA	Accounts Clerk, E B R	.. .. ..	.. 3, Kaylaghat Street	.. .. ditto
Ray Chaudhuri, Panchanan	.. Reader, Government of India Press	.. ..	.. 8, Hastings Street	.. .. ditto

No.	Names.	Style or calling.	Residence or place of business.	Religion.
	Ray Chaudhuri, Panchanan Kinkar, BL	Inspector, License Department, Calcutta Corporation ..	Municipal Office	Hindu
	Ray Chaudhuri, P C ..	Clerk, Office of the Chief Mining Engineer, Railway Board ..	1, Council House Street	ditto
	Ray Chaudhuri, Prafulla Chandra ..	Clerk, Government Factory Inspection Department, Bengal ..	40-1A, Free School Street.. ..	ditto
	Ray Chaudhuri, Prafulla Nath ..	Assistant, Bird & Co	1-1, Clive Street	ditto
	Ray Chaudhuri, Prithvish Chandra ..	Inspector, Collection Department, Calcutta Corporation ..	Municipal Office	ditto
	Ray Chaudhuri, Santosh Nath ..	Assistant, A-G's Office, Bengal	Treasury Buildings	ditto
	Ray Chaudhuri, Shambhu Chandra ..	Assistant Estimator, Calcutta Improvement Trust	5, Clive Street	ditto
	Ray Chaudhuri, Sudhangshu Kumar	Assistant, Accountant-General's Office, Bengal	Treasury Buildings	ditto
	Ray Chaudhuri, Sudhir Kumar ..	Accounts Clerk, Tarmaster & Co	6, Old Post Office Street ..	ditto
	Ray Chaudhuri, Suresh Chandra ..	Assistant, Calcutta Improvement Trust	5, Clive Street	ditto
	Ray Chaudhuri, Sushil Chandra ..	Assistant, McLeod & Co	28, Dalhousie Square	ditto
	Ray Chaudhuri, Tarak Chandra, MA	Lecturer, University College	Senate House	ditto
	Rezwi, Taher	Lecturer, Presidency College	86-1, College Street	Mahomedan
	Rout, Charu Chandra	Assistant, Balmer, Lawrie & Co, Ld	103, Clive Street	Christian
	Rout, Tarini Bhusan	Assistant, A-G's Office, Bengal	Treasury Buildings	Hindu
	Rub, Abdur (Maulvi)	Head Clerk, Income-tax Office	6, Esplanade, East	Mahomedan
	Rudra, Debendra Nath	Clerk, Jardine, Skinner & Co	4, Clive Row	Hindu
	Rudra, Manmatha Nath	Officer-in-charge, Show Rooms, Bengal Waterproof Works, Ld	12, Chowringhee	ditto

Sadhu, Manilal ..	.. Coal Department-in-charge, Williamson, Magor & Co	.. 4, Mangoe Lane	..	.. ditto
Sadhu, Rajrajeswar ..	.. Clerk, Chartered Bank of India, Australia and China	.. 1-1, Clive Street	..	.. ditto
Sadhu, Siddheshwar ..	.. Cashier, Govan Bros, Ld	.. 20, Park Street	..	.. ditto
Sadhukhan, Matilal ..	.. Assistant, Accountant-General's Office, Bengal	.. .. Treasury Buildings	..	.. ditto
Saha, Bhupendra Nath, MSC	.. Extra Assistant Superintendent, Drawing Branch, Surveyor-General's Office	13, Wood Street	..	.. ditto
Saha, Dhirendra M, BSC (Glas)	.. Lighting Supervisor, Calcutta Corporation	.. .. Municipal Office	..	.. ditto
Saha, Gopal Chandra, BSC, GDA	.. Accountant, Bhattacharjee & Co	.. 28, Pollock Street	..	.. ditto
Saha, Gopi Jiban ..	.. Engraver, Survey of India	.. 13, Wood Street	..	.. ditto
Saha, Madan Mohan ..	.. Assistant Bacteriologist, Calcutta Corporation	.. .. Municipal Office	..	.. ditto
Saha, Prafulla Nath	.. Assistant, Office of the Director of Industries, Bengal	.. 40-1A, Free School Street	..	ditto
Saha, Radhakrishna ..	.. Assistant, Bengal Chemical & Pharmaceutical Works, Ld	.. 31, Chittaranjan Avenue, South	..	ditto
Saha, Shachchidananda	.. Assistant, Holmes Wilson & Co, Ld	.. Norton Buildings	..	.. ditto
Saha, Suresh Chandra ..	.. Assistant, Accountant-General's Office, Bengal	.. .. Treasury Buildings	..	.. ditto
Saha, Upendra Nath	.. Under-Broker, F C Pallachi & Co	.. 7, Royal Exchange Place	..	ditto
Sahadevan, K ..	.. Clerk, Burmah Shell Co of India, Ld	.. Hongkong House	..	.. Christian
Sahay, Debi	.. Clerk, C M E's Office, E I R	.. E I R House ..	..	.. Hindu

No.	Names.	Style or calling.	Residence or place of business.	Religion.
	Salamatulla, M	Assistant, Bengal Secretariat, Irrigation Department ..	Writers' Buildings	Mahomedan
	Salamatulla, M D, BA	Lecturer, Teachers' Tr College, Calcutta Corporation ..	1, Wellington Square	ditto
	Salim, Shah A S	Assistant Master, Calcutta Madrassah	19, Wellesley Square	ditto
	Sama, Kandadi Subramania ..	Assistant, Commercial Credit Corporation, Ld	20, Park Street	Hindu
	Samad, Abdus (Maulvi), MA ..	Lecturer, Islamia College	8, Wellesley Street	Mahomedan
	Samad, Abdus (Kazi)	Assistant, Agriculture and Industries Department, Bengal ..	Writers' Buildings	ditto
	Samaddar, Haripada	Draftsman, Drawing Branch, Surveyor-General's Office ..	13, Wood Street	Hindu
	Samanta, Chandra Madhab ..	Assistant, Bengal Chemical & Pharmaceutical Works, Ld ..	31, Chittaranjan Avenue, South ..	ditto
	Samanta, Harinarayan, BSc ..	Bill Overseer, Calcutta Corporation, D E I	79, Cornwallis Street ..	ditto
	Samanta, Manindra Nath, MSc ..	Laboratory Assistant, University College	92, Upper Circular Road ..	ditto
	Sankar, Kadayam Gopal ..	Assistant, Imperial Library	6, Esplanade, East	ditto
	Sankar, Kottadia Ramanath Bhawani	Salesman, Kodak, Ld	17, Park Street	ditto
	Sankaran, N S	Assistant, Guest, Keen, Williams, Ld	7, Council House Street	ditto
	Sankernarain, T R	Assistant, Bird & Co	1-1, Clive Street	ditto
	Santra, Panchanan	Accountant, Begg, Dunlop & Co, Ld	2, Hare Street	ditto
	Sanyal, Abinash Chandra ..	Head Despatcher, Photo-Litho Branch, Surveyor-General's Office	14, Wood Street	ditto
	Sanyal, Ananta Lal, BSc ..	Assistant, Accountant-General's Office, Bengal	Treasury Buildings	ditto

Sanyal, Bishwa Ranjan, BA	Assistant, Bengali Translator's Office	..	..	Writers' Buildings	ditto
Sanyal, Hiron Kumar, MA	Lecturer, City College	..	..	102-1, Amherst Street	ditto
Sanyal, Kalipada	Assistant, Mackinnon, Mackenzie & Co	..	..	16, Strand Road	ditto
Sanyal, Kamal Kumar, BA	Assistant, Accountant-General's Office, Bengal	..	..	Treasury Buildings	ditto
Sanyal, K C	Demonstrator, St Paul's College	..	..	33-1, Amherst Street	ditto
Sanyal, Manindra Nath, BA, BT	Assistant Master, Bethune Collegiate School	..	..	181, Cornwallis Street	ditto
Sanyal, Manmatha Nath	Assistant, Eastern Bank, Ld	..	..	9, Clive Street	ditto
Sanyal, Pravat Ch	Head Clerk, Traffic Department, E B R	..	..	3, Kaylaghat Street	ditto
Sanyal, Shailendra Nath, BA	Salesman, Dodge & Seymour, Ld	..	..	Tower House, Chowringhee Square	ditto
Sanyal, Siddhinath	Cashier, Phœnix Assurance Co, Ld	..	..	28, Dalhousie Square	ditto
Sanyal, S N	Assistant, Mackinnon, Mackenzie & Co	.	..	8, Strand Road	ditto
Sanyal, Sujanendra	Assistant, Balmer, Lawrie & Co, Ld	..	..	103, Clive Street	ditto
Sanyal, Tarapada, MA, BT	Assistant Master, Hindu School	..	..	College Square	ditto
Sanyal, Trepuresh Chandra	Clerk, National City Bank of New York		..	4, Clive Street	ditto
Sarbadhikary, Nagendra Kumar	Reader, *Statesman*, Ld	..	..	Statesman House	ditto
Sardar Ataur Rahman, BA	Assistant, A-G's Office, Bengal	..	..	Treasury Buildings	Mahomedan
Sardar, Gunasindhu, MSc	Assistant Master, Sanskrit Collegiate School	..	..	College Square	Hindu
Sardar, Mahomed Abdullah	Assistant, Bengal Secretariat, P W D	..	..	Writers' Buildings	Mahomedan

No.	Names.	Style or calling.	Residence or place of business.	Religion.
	Sarkar, Abdul Latiff	Clerk, Office of the Inspector of European Schools (Bengal)	40-1A, Free School Street	Mahomedan
	Sarkar, Abinash Chandra	Supervisor, Drainage, Calcutta Corporation	Municipal Office	Hindu
	Sarkar, Ajar Chandra	Assistant, Calcutta University	Senate House	ditto
	Sarkar, A K	Demonstrator, St. Paul's College	33-1, Amherst Street	ditto
	Sarkar, Akshaya Kumar	Assistant, Calcutta Improvement Trust	5, Clive Street	ditto
	Sarkar, Amulya Ratan	Clerk, Agency Office, E I R	E I R House	ditto
	Sarkar, Anil Chandra	Clerk, C A O's Office, E I R	E I R House	ditto
	Sarkar, Ardhendu Shekhar	Assistant Cashier, North British and Mercantile Insurance Co, Ld	101-1, Clive Street	ditto
	Sarkar, Arthur Kenneth	Officiating Divisional Accountant, Workshops Electrical Division, P W D	Writers' Buildings	Christian
	Sarkar, Atul Krishna	Head Clerk, Fire Reinsurance Department, New Zealand Insurance Co, Ld	26, Dalhousie Square	Hindu
	Sarkar, Baidyanath, BA	Assistant, Education Department, Bengal Secretariat	Writers' Buildings	ditto
	Sarkar, Bhola Nath	Assistant, Office of the Director of Public Instruction, Bengal	Writers' Buildings	ditto
	Sarkar, Bijaya Bhusan, BL	Clerk, Assessor's Department, Calcutta Corporation	Municipal Office	ditto
	Sarkar, Bijaya Kumar	Clerk, C A O's Office, E I R	E I R House	ditto
	Sarkar, Bishnupada	Assistant, Bengal Secretariat Record Room	Writers' Buildings	ditto
	Sarkar, Bishnupada, BA	Inspector, License Department, Calcutta Corporation	Municipal Office	ditto
	Sarkar, Bissheshwar	Clerk, Shaw, Wallace & Co	4, Bankshall Street	ditto

Sarkar, Brojendra Nath ..	..	Assistant, Lionel Edwards, Ld	.. D-1, Clive Buildings	ditto
Sarkar, Chandi Charan	..	Salesman, Adair, Dutt & Co, Ld	.. 5, Dalhousie Square	ditto
Sarkar, Charu Chandra ..	..	Assistant Accountant-General's Office, Bengal ..	.. Treasury Buildings	ditto
Sarkar, Dharanidhar ..	..	Litho Machine Printer, Survey of India	.. 14, Wood Street	ditto
Sarkar, Haridas ..	..	Assistant, Bengal Secretariat, Revenue Department	.. Writers' Buildings	ditto
Sarkar, Harilal ..	..	Assistant, Bengal Secretariat, Commerce Department	.. Writers' Buildings	ditto
Sarkar, Hari Narayan ..	..	Surveyor and Estimator, Calcutta Corporation ..	.. Municipal Office	ditto
Sarkar, Haripada ..	..	Head Assistant, I R G P & T W Co, Ld ..	.. 7, Old Court House Street ..	ditto
Sarkar, Harisadhan ..	..	Overseer, Calcutta Improvement Trust	.. 5, Clive Street	ditto
Sarkar, Harisadhan ..	..	Assistant, Accountant-General's Office, Bengal ..	.. Treasury Buildings	ditto
Sarkar, Jagadish Chandra	..	Accountant, George, Spencer, Moulton & Co (India), Ld	.. 8, Esplanade, East	ditto
Sarkar, Jitendra Nath ..	..	Stenographer, Engineering Department, E B R ..	.. 3, Kaylaghat Street	ditto
Sarkar, Jitendra Nath ..	..	Salesman, Volkart Brothers	.. 11, Clive Street	ditto
Sarkar, Kali Mohan ..	..	Assistant, Sir Sarupchand Hukumchand & Co ..	.. 30, Clive Street	ditto
Sarkar, Kalipada, BA ..	..	Clerk, Office of the Controller of Army Factory Accounts	.. 6, Esplanade, East	ditto
Sarkar, Kartic Chandra ..	..	Assistant, Lionel Edwards, Ld	.. D-1, Clive Buildings	ditto
Sarkar, Karunamaya ..	..	Assistant, Office of the Director of Public Health, Bengal	.. Writers' Buildings	ditto
Sarkar, Keshab Lal ..	..	Assistant, Mackinnon, Mackenzie & Co	.. 16, Strand Road	ditto

No.	Names.	Style or calling.	Residence or place of business.	Religion.
	Sarkar, Khagendra Nath ..	Assistant, Hindusthan Co-operative Insurance Society, Ld ..	Hindusthan Buildings	Hindu
	Sarkar, Kumud Nath	Lighting Inspector, Calcutta Corporation	Municipal Office	ditto
	Sarkar, L P	Chief Assistant, Oriental Govt Security Life Assurance Co, Ld ..	2, Clive Row	ditto
	Sarkar, Manmatha Nath	Assistant, Burn & Co, Ld	12, Mission Row	Brahmo
	Sarkar, Manmohan	Steno-Typist, W T Henley's Telegraph Works Co, Ld ..	Old Court House Corner ..	Hindu
	Sarkar, Mati Lal	Assistant, McLeod & Co	28, Dalhousie Square	ditto
	Sarkar, Nalin Bihari	Head Clerk, Fire Department, New Zealand Insurance Co, Ld ..	26, Dalhousie Square	ditto
	Sarkar, Nalini Nath, BA ..	Inspector, License Department, Calcutta Corporation ..	Municipal Office	ditto
	Sarkar, Narayan Das, BL ..	Inspector, License Department, Calcutta Corporation ..	Municipal Office	ditto
	Sarkar, Narendra Nath	Head Clerk, Traffic Department, E B R	3, Kaylaghat Street	ditto
	Sarkar, N L	Assistant, Guest, Keen, Williams, Ld	7, Council House Street	ditto
	Sarkar, Panchanan	Assistant, Accounts Department, Calcutta Corporation ..	Municipal Office	ditto
	Sarkar Panchu Lal	Salesman, I R G P & T W Co, Ld	7, Old Court House Street ..	ditto
	Sarkar, Phanindra Chandra ..	Head Estimator, Superintending Engineer's Office, Electrical Circle, Bengal	Writers' Buildings	ditto
	Sarkar, Phanindra Nath	Assistant, Accountant-General's Office, Bengal	Treasury Buildings	ditto
	Sarkar, Prafulla Kumar, MA, BT ..	Assistant Head Master, Calcutta Training School	8, European Asylum Lane ..	ditto
	Sarkar, Pran Kumar ..	Clerk, Calcutta Improvement Trust	5, Clive Street	ditto

Sarkar, Radha Binode ..	..	Clerk, Assessor's Department, Calcutta Corporation ..	.. Municipal Office ..	.. ditto
Sarkar, Rajendra Nath ..	..	Assistant, Martin & Co	.. 12, Mission Row ..	.. ditto
Sarkar, Ramesh Chandra..	..	Estimator, Government of India Press	.. 8, Hastings Street ..	.. ditto
Sarkar, Ramrenu, BA ..	..	Assistant, Income-tax Office	.. 6, Esplanade, East ..	.. ditto
Sarkar, Satish Chandra ..	..	Clerk, P D O, Imperial Bank of India	.. 8, Council House Street ..	.. ditto
Sarkar, Satish Chandra ..	..	Assessing Inspector, Calcutta Corporation ..	.. Municipal Office ..	.. ditto
Sarkar, Satish Chandra, BSc	..	Accountant, Executive Engineer's Office, Hijli Division	.. Writers' Buildings ..	.. ditto
Sarkar, Satish Chandra, MA	..	Assistant, Accountant-General's Office, Bengal ..	.. Treasury Buildings ..	.. ditto
Sarkar, Satya Charan ..	..	Clerk, Shaw, Wallace & Co	.. 4, Bankshall Street ..	.. ditto
Sarkar, S C	..	Canvasser, G E C (India), Ld	.. Magnet House, Chittaranjan Avenue (South)	ditto
Sarkar, Shachindra Kumar	..	Assistant, Commercial Intelligence Department ..	.. 1, Council House Street ..	.. ditto
Sarkar, Shachindra Nath	..	Clerk, C A O's Office, E I R	.. E I R House	.. ditto
Sarkar, Sharat Chandra ..	..	Assistant, Mathematical Instrument Office ..	.. 15, Wood Street ..	.. ditto
Sarkar, Shishir Kumar ..	..	Assistant, Lovelock & Lewes	.. 4, Lyons Range ..	.. ditto
Sarkar, Sudhir Kumar, MA	..	Assistant, Office of the Controller of Currency ..	.. Treasury Buildings ..	.. ditto
Sarkar, Sukumar, MSc ..	..	Research Assistant, University College	.. 92, Upper Circular Road	.. ditto
Sarkar, Tarapada ..	..	Clerk, Calcutta Improvement Trust	.. 5, Clive Street ..	.. ditto
Sarkar, Tinkari ..	..	Assistant, Office of the Controller of Currency ..	.. Treasury Buildings ..	.. ditto

No.	Names.	Style or calling.	Residence or place of business.	Religion.
	Sarkar, Tulsi Charan, BA ..	Accounts Clerk, E B R	.. 3, Kaylaghat Street	Hindu
	Sarkar, Wajed Ali, BA	Assistant, Bengal Secretariat, Finance Department	.. Writers' Buildings ..	Mahomedan
	Sarkel, Jogesh Chandra	Clerk, Collection Department, Calcutta Corporation	.. Municipal Office	Hindu
	Sashittal, Hemchandra Dattatraya ..	Engineer, English Electric Co, Ld	.. D-4, Clive Buildings	ditto
	Sattar, Abdus, BA	Examiner of Accounts, Income-tax Office ..	.. 6, Esplanade, East	Mahomedan
	Seal, A T	Assistant, P & O Banking Corporation, Ld ..	.. 1, Fairlie Place	Hindu
	Seal, Bholanath	Head Clerk, W W Department, Calcutta Corporation	.. Municipal Office	ditto
	Seal, Bijaya Krishna	Deputy Cashier, Gillanders, Arbuthnot & Co ..	.. 8, Clive Street	ditto
	Seal, Chakoo Lal	Assistant, Mackinnon, Mackenzie & Co	.. 16, Strand Road	ditto
	Seal, Gokul Bihari	Audit Clerk, E B R	.. 3, Kaylaghat Street	ditto
	Seal, Keshab Chandra	Assistant, Accountant-General's Office, Bengal ..	.. Treasury Buildings	ditto
	Seal, Krishna Lal	Clerk, Ralli Brothers, Ld	.. 16, Hare Street	ditto
	Seal, Krishna Lal	Book-keeper, Harrisons & Crosfield, Ld	.. 6, Church Lane	ditto
	Seal, Manik Lal	Assistant, J Thomas & Co	.. 8, Mission Row	ditto
	Seal, Mani Mohan	Assistant, Begg Dunlop & Co, Ld	.. 2, Hare Street	ditto
	Seal, Mukta Lal	Head Assistant, Sec V, Accounts Department, Calcutta Corporation	Municipal Office	ditto
	Seal, Nalini Kanta	Clerk, Share Department, Imperial Bank of India ..	.. Strand Road	ditto

Seal, Nitai Chand	Assistant Cashier, Royal Calcutta Turf Club	11, Russell Street		ditto
Seal, Prabodh Chandra	Assistant, Balmer, Lawrie & Co, Ld	103, Clive Street		ditto
Seal, Prannath	Assistant, Commercial Intelligence Department	1, Council House Street		ditto
Seal, Pratap Chandra	Clerk, Shaw, Wallace & Co	4, Bankshall Street		ditto
Seal, Ras Bihari	Assistant, Office of the Controller of Currency	Treasury Buildings		ditto
Seal, Suresh Chandra	Accountant, D N Biswas & Co	10, Dalhousie Square, East		ditto
Sen, Ajit Narayan	Acting Overseer. Government of India Press	8, Hastings Street		ditto
Sen, Amarendra Nath	Overseer, City Division, P W D	Writers' Buildings		ditto
Sen, Amiya Kumar	Assistant, Bengal Secretariat L S-G Department	Writers' Buildings		diito
Sen, Amulya Charan	Assistant, Price, Waterhouse, Peat & Co	B4, Clive Buildings		ditto
Sen, Amulya Charan	Security Clerk, Stewart & Co	8, Clive Street		ditto
Sen, Anath Nath	Assistant, Office of the I-G of Registration, Bengal	Writers' Buildings		ditto
Sen, Anil Chandra	Assistant, Office of the Private Secretary to H E the Governor of Bengal	Government House		ditto
Sen, Arunmaya	Clerk, Ralli Brothers, Ld	16, Hare Street		ditto
Sen, Asharanjan	Assistant, Office of the Inspector-General of Prisons, Bengal	Writers' Buildings		ditto
Sen, Atul Chandra	Instructor, Government Commercial Institute	11, Hastings Street		ditto
Sen, Atul Krishna	Assistant Cashier, A-G's Office, Bengal	Treasury Buildings		ditto
Sen, Bata Krishna	Assistant, Royal Insurance Co, Ld	26 & 27, Dalhousie Square		ditto

No.	Names.	Style or calling.	Residence or place of business.	Religion.
	Sen, Bhujendra Bhusan ..	.. Stenographer, Land Acquisition Office	.. 5, Bankshall Street	Hindu
	Sen, Bijayapada ..	.. Assistant, Andrew, Yule & Co, Ld	.. 8, Clive Row	ditto
	Sen, Binode Bihari ..	.. Engineering Overseer, Calcutta Corporation, Distt II	.. 22, Mirzapore Street	ditto
	Sen, Birendra Lal ..	.. Computor, C E's Office, E I R	.. E I R House	ditto
	Sen, Birendra Nath ..	.. Assistant, Calcutta Improvement Trust	.. 5, Clive Street	ditto
	Sen, Bireshwar ..	.. Clerk, C A O's Office, E I R	.. E I R House	ditto
	Sen, Braja Nath ..	.. Head Clerk (Sales), I B P Co, Ld	.. 8, Clive Street	ditto
	Sen, Chandi Charan, BA ..	.. Assistant, Office of the Controller of Currency ..	.. Treasury Buildings	ditto
	Sen, Chunilal ..	.. Assistant, Mackinnon, Mackenzie & Co	.. 16, Strand Road	ditto
	Sen, Debendra Nath ..	.. Clerk, Watch & Ward Department, E I R ..	.. E I R House	ditto
	Sen, Dhirendra Nath ..	.. Assistant, Bird & Co	.. 1-1, Clive Street	ditto
	Sen, Dulichand ..	.. Cashier, Bombay Co, Ld	.. 19, British Indian Street ..	ditto
	Sen, Dwijendra Nath ..	.. Assistant, Office of the Director of Public Instruction, Bengal	.. Writers' Buildings	ditto
	Sen, Gokul Chandra ..	.. Clerk, B R Section, Port Commissioners' Office ..	.. Strand Road	ditto
	Sen, Gokul Chandra ..	.. Invoice Clerk, Begg, Dunlop & Co, Ld	.. 2, Hare Street ..	ditto
	Sen, Gorachand, BL ..	.. Court Clerk, C C M's Office, E I R	.. E I R House	ditto
	Sen, Gour Kishore ..	.. Assistant, Income-tax Office	.. 6, Esplanade, East	ditto

Sen, Haridas	Assistant, Mackinnon, Mackenzie & Co	16, Strand Road	ditto
Sen, Haripada	Assistant, Mackinnon, Mackenzie & Co	16, Strand Road	ditto
Sen, Haripada	Assistant, Balmer, Lawrie & Co, Ld	103, Clive Street	ditto
Sen, Hari Prasad	Head Clerk, Photo-Litho Branch, Surveyor-General's Office	14, Wood Street	ditto
Sen, Hemanta Kumar	Lecturer, Government Commercial Institute	11, Hastings Street	ditto
Sen, Hemanta Kumar	Assistant, J Thomas & Co	8, Mission Row	ditto
Sen, Hem Chandra, BL	Inspector, License Department, Calcutta Corporation	Municipal Office	ditto
Sen, Hiralal	Assistant, Accountant-General's Office, Bengal	Treasury Buildings	ditto
Sen, Janaranjan, BA	Assistant (C A D), A-G's Office, Bengal	Treasury Buildings	ditto
Sen, Jatindra Mohan	Clerk, Jardine, Skinner & Co	4, Clive Row	ditto
Sen, Jogesh Chandra, BA	Assistant, Income-tax Office	3, Government Place, West	ditto
Sen, Jogesh Chandra	Accountant, *Commerce*	303, Bowbazar Street	ditto
Sen, Jyotish Chandra	Superintendent, Bills Dept, Central Bank of India, Ld	100, Clive Street	ditto
Sen, Kanta Nath	Instructor, Government Commercial Institute	11, Hastings Street	ditto
Sen, Kausiki Kumar	Clerk, Agent's Office, E I R	E I R House	ditto
Sen, Kedar Nath	Clerk, Calcutta Improvement Trust	5, Clive Street	ditto
Sen, Keshab Chandra	Senior Clerk, Harrisons & Crosfield, Ld	6, Church Lane	ditto
Sen, Keshab Chandra	Ledger-keeper, Bombay Co, Ld	19, British Indian Street	ditto

No.	Names.	Style or calling.	Residence or place of business.	Religion.
	Sen, Krishna Bihari ..	.. Clerk, C M E's Office, E I R	.. E I R House	.. Hindu
	Sen, Kshirode Chandra ..	.. Clerk, Assessor's Department, Calcutta Corporation ..	.. Municipal Office	.. ditto
	Sen, Kshitindra Nath, BL	.. Assistant Secretary, Great India Insurance, Ld ..	.. 14, Clive Street ..	.. ditto
	Sen, Kushendra Lal ..	.. Clerk, Kilburn & Co	.. 4, Fairlie Place ..	.. ditto
	Sen, Lakshmi Kanta ..	.. Clerk, Ralli Brothers, Ld	.. 16, Hare Street ..	.. ditto
	Sen, Mani Bhusan, BSC ..	.. Assistant, A-G's Office, Bengal	.. Treasury Buildings .	.. ditto
	Sen, Manik Lal ..	.. Clerk, C E's Office, E I R ..	.. E I R House ..	.. ditto
	Sen, Manik Lal ..	.. Cashier, Calcutta Improvement Trust	.. 5, Clive Street ..	.. ditto
	Sen, Manmatha Nath ..	.. Assistant, Queensland Insurance Co, Ld ..	.. 6, Royal Exchange Place	.. ditto
	Sen, Manmatha Nath ..	.. Ledger-keeper, Bombay Co, Ld	.. 19, British Indian Street	.. ditto
	Sen, Manonit ..	.. Clerk, Traffic Department, E B R	.. 3, Kaylaghat Street ..	.. ditto
	Sen, Mihir Kumar, MA ..	.. Professor, Vidyasagar College	.. 39, Sankar Ghose Lane ..	.. ditto
	Sen, Nagendra Nath ..	.. Clerk, P D O, Imperial Bank of India	.. 8, Council House Street ..	.. ditto
	Sen, Nagendra Nath ..	.. Accountant, Governor's Estates Division ..	.. Government House ..	.. ditto
	Sen, Narendra Krishna ..	.. Clerk, Cash Department, Imperial Bank of India ..	.. Strand Road	.. ditto
	Sen, Narendra Lal ..	.. Assistant, Controller's Office, Calcutta University ..	.. Senate House ..	.. ditto
	Sen, Narendra Narayan ..	.. Audit Inspector, Port Commissioners' Office ..	.. Strand Road ..	.. ditto

Sen, Narendra Nath	Clerk, Office of the Chief Mining Engineer, Railway Board ..	1, Council House Street	ditto
Sen, Narendra Nath	Assistant, Presidency College	86-1, College Street	ditto
Sen, Netai Charan, BA	Assistant, Bengal Secretariat, Appointment Department ..	Writers' Buildings	ditto
Sen, Nirmal Chandra, B com ..	S A Superintendent, Drawing Office, Survey of India ..	13, Wood Street	ditto
Sen, Nirmal Krishna, BSc, BL ..	Assistant Head Master, Oriental Seminary	336, Upper Chitpore Road ..	ditto
Sen, Nirmallya Chandra, BA ..	Assistant, Longman's Green & Co, Ld	6, Old Court House Street ..	ditto
Sen, Nripendra Nath	Clerk, Jardine, Skinner & Co	4, Clive Row	ditto
Sen, O A V	Assistant, Gillanders, Arbuthnot & Co	8, Clive Street	Christian
Sen, Panchanan	Assistant, Bengal Secretariat, Police Department	Writers' Buildings	Hindu
Sen, Panchanan	Stenographer, Lloyds Bank, Ld	101-1, Clive Street	ditto
Sen, Panchanan	Assistant, Accountant-General's Office, Bengal	Treasury Buildings	ditto
Sen, Panchkari	Assistant, Bengal Secretariat, Political Department	Writers' Buildings	ditto
Sen, Parimal Bikash, MSc ..	Assistant Lecturer, University College	92, Upper Circular Road	ditto
Sen, Pashupati Nath, BA ..	Inspector, License Department, Calcutta Corporation ..	Municipal Office	ditto
Sen, Prafulla Kumar	Head Clerk, Mechanical Department, E B R	3, Kaylaghat Street	ditto
Sen, Prafulla Kumar	Clerk, Union Insurance Society of Canton, Ld	8, Clive Street	ditto
Sen, Pramode Kumar	Assistant, Imperial Record Department	Treasury Buildings	ditto
Sen, Priya Nath	Cashier, Anderson Wright & Co	22, Strand Road	ditto

Names.	Style or calling.	Residence or place of business.	Religion.
Sen, Purna Chandra	Journalist, *Statesman*, Ld	Statesman House	Hindu
Sen, Raghu Nath	Clerk, Lloyds Bank, Ld	101-1, Clive Street	ditto
Sen, Rajkumar, MSc	Professor, Vidyasagar College	39, Shankar Ghose Lane	ditto
Sen, Ramesh Chandra	Assistant, Office of the Director of Public Instruction, Bengal ..	Writers' Buildings	ditto
Sen, Ramesh Chandra	Assistant, Controller's Office, Calcutta University	Senate House	ditto
Sen, Rash Behari	Cashier (Collection), Port Commissioners' Office	Strand Road	ditto
Sen, Saroj Kumar	Stenographer, Surgeon-General's Office, Bengal	Writers' Buildings	Brahmo
Sen, Sati Prasad	Assistant, Mackinnon, Mackenzie & Co	16, Strand Road	Hindu
Sen, Satish Chandra	Inspector, Collection Department, Calcutta Corporation ..	Municipal Office	ditto
Sen, Satish Chandra	Head Clerk, Accounts Office, E B R	3, Kaylaghat Street	ditto
Sen, Satish Chandra	Clerk, Ralli Brothers, Ld	16, Hare Street	ditto
Sen, Satish Chandra	Estimator, Calcutta Improvement Trust	5, Clive Street	ditto
Sen, Satish Chandra	Assistant, Office of the Inspector-General of Police ..	Writers' Buildings	ditto
Sen, Satish Chandra	Cashier, Commercial Union Assurance Co, Ld ..	32, Dalhousie Square	ditto
Sen, Sharat Chandra, BA ..	Assessor, Income-tax Office	6, Esplanade, East	ditto
Sen, Shailendra Nath	Assistant, Macneill & Co	2, Fairlie Place	ditto
Sen, Shailendra Nath	Assistant, Andrew, Yule & Co, Ld	8, Clive Row	ditto
Sen, Shailesh Chandra	Assistant, Accountant-General's Office, Bengal ..	Treasury Buildings	ditto

Sen, Shashi Kanta	Assistant, Bengal Chemical and Pharmaceutical Works, Ld	31, Chittaranjan Avenue, South	ditto
Sen, Shyama Charan	Assistant, Bengal Secretariat, Irrigation Department	Writers' Buildings	ditto
Sen, Shyam Sundar	Assistant, F W Heilgers & Co	1-1, Clive Street	ditto
Sen, Subodh Chandra	Assistant, McLeod & Co	28, Dalhousie Square	ditto
Sen, Subodh Chandra	Physical Instructor, Presidency College	86-1, College Street	ditto
Sen, Sudhir Chandra	Assistant, Calcutta Improvement Trust	5, Clive Street	ditto
Sen, Sudhir Kumar, MA	Assistant, Commercial Intelligence Department, India	1, Council House Street	ditto
Sen, Sukumar, MA	Lecturer, University College	Senate House	ditto
Sen, Sukumar	Secretary, Great India Insurance, Ld	14, Clive Street	ditto
Sen, Sunit Ch, BSc	Inspector, Collection Department, Calcutta Corporation	Municipal Office	ditto
Sen, Surendra Nath	Assistant, Mackinnon, Mackenzie & Co	16, Strand Road	ditto
Sen, Surendra Nath	Assistant, Accountant-General's Office, Bengal	Treasury Buildings	ditto
Sen, Surendra Nath	Revenue Assistant, Presidency Commissioners' Office	3, Charnock Place	ditto
Sen, Upendra Chandra	Cashier, Port Commissioners' Office	Strand Road	ditto
Sen, Upendra Lal	Treasurer, Grindlay & Co, Ld	6, Church Lane	ditto
Sen, Upendra Nath, BA	Assistant, Accountant-General's Office, Bengal	Treasury Buildings	ditto
Sen Gupta, A C	Chief Clerk, Medical Department, E B R	3, Kaylaghat Street	ditto
Sen Gupta, Ajit Kumar, BE	Supervisor, P H D, Bengal	3, Charnock Place	ditto

No.	Names.	Style or calling.	Residence or place of business.	Religion.
	Sen Gupta, Bijoy Kumar, BA	Assistant, Bengal Secretariat, Finance Department	Writers' Buildings	Hindu
	Sen Gupta, Binaya Krishna	Head Clerk, Timber Deptt, Jardine Skinner & Co	4, Clive Row	ditto
	Sen Gupta, Birendra Kumar, MA	Inspector of Schools, Calcutta Corporation	Municipal Office	ditto
	Sen Gupta, Chinta Haran, BL	Assistant, Indian Stores Department (Inspection)	6, Esplanade, East	ditto
	Sen Gupta, Debendra Nath	Assessing Inspector, Calcutta Corporation	Municipal Office	ditto
	Sen Gupta, Dhirendra Lal	Assistant, Accountant-General's Office, Bengal	Treasury Buildings	ditto
	Sen Gupta, Dinesh Chandra, BSc	Clerk, Allahabad Bank, Ld	6, Royal Exchange Place	ditto
	Sen Gupta, Gopal Lal, BA	Assistant Master, Armenian College	39, Free School Street	ditto
	Sen Gupta, H	Salesman, Worthington-Simpson, Ld	10, Clive Street	ditto
	Sen Gupta, Jamini Kanta, MA	Teacher, Bangabasi College School	25-1, Scott Lane	ditto
	Sen Gupta, Jatindra Kumar	Clerk, Secretary's Deptt, Port Commissioners' Office	Strand Road	ditto
	Sen Gupta, Jatindra Kumar, MA	Assistant, Accountant-General's Office, Bengal	Treasury Buildings	ditto
	Sen Gupta, Jatindra Nath	Head Clerk, Land Acquisition Office	5, Bankshall Street	ditto
	Sen Gupta, Kartic Chandra	Assistant, Martin & Co	12, Mission Row	ditto
	Sen Gupta, Kshitish Chandra	Assistant, Bengal Secretariat, Finance Department	Writers' Buildings	ditto
	Sen Gupta, Makhan Lal, BSc	Assistant, Accountant-General's Office, Bengal	Treasury Buildings	ditto
	Sen Gupta, Manaranjan, MA	Assistant, Accountant-General's Office, Bengal	Treasury Buildings	ditto

Sen Gupta, Matilal	Clerk, Calcutta Improvement Trust	5, Clive Street	ditto
Sen Gupta, Nalini Kanta	Assistant, James Finlay & Co, Ld	1, Clive Street	ditto
Sen Gupta, Nalini Kanta	Assistant, Andrew, Yule & Co, Ld	8, Clive Row	ditto
Sen Gupta, N B	Assistant, Enquiry Department, Calcutta Tramways Co, Ld	7, Church Lane	ditto
Sen Gupta, Nishikanta, MA	Assistant, Calcutta University	Senate House	ditto
Sen Gupta, Panna Lal, BSC	Clerk, Army Factory Accounts	6, Esplanade, East	ditto
Sen Gupta, Peary Mohan	Professor, Bangabasi College	25-1, Scott Lane	ditto
Sen Gupta, Pramatha Nath	Clerk, C E's Office, E I R	E I R House	ditto
Sen Gupta, Prem Ranjan	Assistant, Bird & Co	1-1, Clive Street	ditto
Sen Gupta, Rabindra Kumar	Head Clerk, Begg Dunlop & Co, Ld	2, Hare Street	ditto
Sen Gupta, Saroj Kumar	Salesman, Commercial Credit Corporation, Ld	20, Park Street	ditto
Sen Gupta, Satish Chandra, MSC	Demonstrator, Ripon College	24, Harrison Road	ditto
Sen Gupta, Satish Chandra	Clerk, Jardine, Skinner & Co	4, Clive Row	ditto
Sen Gupta, Satish Chandra	Head Clerk, Govt School of Art	28, Chowringhee	ditto
Sen Gupta, Satyaranjan, MSC	Lecturer, Ripon College	24, Harrison Road	ditto
Sen Gupta, Shachindra Nath	Assistant, Accounts Department, Calcutta Corporation	Municipal Office	ditto
Sen Gupta, Shachindra Nath	Building Inspector, Calcutta Corporation	Municipal Office	ditto
Sen Gupta, Shailendra Kumar	Assistant, Income-tax Office	Imperial Secretariat Buildings	ditto

No.	Names.	Style or calling.	Residence or place of business.	Religion.
	Sen Gupta, S N	Assistant, Guest, Keen, Williams, Ld	7, Council House Street	Hindu
	Sen Gupta, Sudodh Ch	Clerk, C A O's Office, E I R	E I R House	ditto
	Sen Gupta, Surendra Chandra ..	Assistant, Surgeon-General's Office, Bengal	Writers' Buildings	ditto
	Sen Gupta, Suresh Chandra ..	Assistant, Bengal Secretariat, P W D	Writer's Buildings	ditto
	Sen Gupta, Sushil Kumar ..	Stenographer, Imperial Chemical Industries (India), Ld ..	18, Strand Road	ditto
	Sen Gupta, Tarak Nath, BSC ..	Assistant Analyst, Bengal Public Health Laboratory ..	Chittaranjan Avenue	ditto
	Sen Gupta, Upendra Nath ..	Clerk, C A O's Office, E I R	E I R House	ditto
	Sen Majumdar, Rasaranjan, BA BT,	Sub-Inspector of Schools, Calcutta	40-1A, Free School Street ..	ditto
	Sen Ray, Tarit Bihari, B COM ..	Examiner of Accounts, Income-tax Office	3, Government Place, West ..	ditto
	Seshiah Subbavenkatarama ..	Clerk, Office of H M's Senior Trade Commissioner in India ..	4, Fairlie Place	ditto
	Set, Apurba Krishna	Assistant, Brooke Bond (India), Ld	2, Metcalfe Street	ditto
	Set, Mukunda Lal	Assistant, Accountant-General's Office, Bengal	Treasury Buildings	ditto
	Seth, Radhakrishna	Clerk, Allahabad Bank, Ld	6, Royal Exchange Place ..	ditto
	Shafi, Mahomed, MA, BT	Assistant Master, Calcutta Madrasah	19, Wellesley Square	Mahomedan
	Shafi, Mahomed	Examiner of Stores, Indian Stores Department (Inspection) ..	6, Esplanade, East	ditto.
	Shambhui, Ramkrishna	Photographer, Survey of India	14, Wood Street	Hindu

Shariff, Shamsuddin, BL	..	Examiner of Accounts, Income-tax Office	..	6, Esplanade, East	Mahomedan
Sharma, Baburam	..	Overseer, Calcutta Improvement Trust	..	5, Clive Street	Hindu
Sharma, Jairam	..	Clerk, Allahabad Bank, Ld	..	6, Royal Exchange Place	ditto
Sharma, N Ramnath	..	Bridge Inspector, C E's Office, E I R	..	E I R House ..	ditto
Sharma, Venkataramaniyer Subramania	A	Stenographer to the D P I, Bengal	..	Writers' Buildings	ditto
Shastri, Bidhu Shekhar (Pandit), MA		Professor, Calcutta University	..	Senate House	ditto
Shastri, S H	..	Clerk, Burmah-Shell Co of India, Ld	..	Hongkong House	ditto
Shawoo, U N	..	Reader, P S Office, E I R	..	E I R House ..	ditto
Shiva, Behari Lal	..	Assistant, Martin & Co	..	12, Mission Row	ditto
Shome, Bhuban Mohan	..	Assistant, Bird & Co	..	1-1, Clive Street	ditto
Shome, Joy Gopal	..	Assistant, Accountant-General's Office, Bengal	..	Treasury Buildings	Christian
Shome, Lalit Mohan	..	Clerk, Photo-Litho Branch, Surveyor-General's Office		14, Wood Street	Hindu
Shome, Lalit Mohan, BSC		Com Overseer, Calcutta Corporation, District III	..	Hogg Street ..	ditto
Shome, Nalini Prasanna	..	Clerk, Jardine, Skinner & Co	..	4, Clive Row	ditto
Shome, Purna Chandra	..	Assistant, Accountant-General's Office, Bengal	..	Treasury Buildings	ditto
Shome, S N	..	Clerk, Calcutta Mint	..	47, Strand Road	ditto
Shome Barman, Nagendra Nath		Assistant, J Thomas & Co	..	8, Mission Row	ditto
Siddhanta, Ramkanai, BA		Assistant, Bengal Secretariat, Police Dept	..	Writers' Buildings	ditto

No.	Names.	Style or calling.	Residence or place of business.	Religion.
	Siddique, Fazlur Rahman, BA, BT	Assistant Master, Calcutta Training School	8, European Asylum Lane	Mahomedan
	Siddique, Md. Abdus Samad Quamer, BA	Urdu Master, La Martiniere	11, Loudon Street	ditto
	Sidva, Nowroji Dinshaw	Assistant, Roneo, Ld	9, Clive Street	Zoroastrian
	Singh, Amulya Kumar	Assistant, Bengal Secretariat, L S-G Department	Writers' Buildings	Hindu
	Singh, J N	Clerk, C E S C, Ld	Victoria House	ditto
	Singh, Kalika	Clerk, Allahabad Bank, Ld	6, Royal Exchange Place	ditto
	Singh, Khushal	Assistant, Mutual Indemnity and Finance Corporation (India), Ld	32-1, Dalhousie Square, South	ditto
	Singh, Pran	Claims Inspector, E B R	3, Kaylaghat Street	ditto
	Singh, Rajaram	Clerk, Agent's Office, E B R	3, Kaylaghat Street	ditto
	Singh, Sripal	Assistant, Allahabad Bank, Ld	6, Royal Exchange Place	ditto
	Singh, Umrao	Assistant, Martin & Co	12, Mission Row	ditto
	Sinha, Ajit Kumar	Assistant, Calcutta University	Senate House	ditto
	Sinha, A K	Clerk, Burmah-Shell Co of India, Ld	Hongkong House	ditto
	Sinha, Ashutos	Hd Draftsman, Superintending Engineer's Office, S W Circle, P W D	Treasury Buildings	ditto
	Sinha, Ashutos	Shift Engineer, Special Officer's Department, Calcutta Corporation	Municipal Office	ditto
	Sinha, Bahu Ballav	Asst St Supervisor, C C M's Office, E I R	E I R House	ditto
	Sinha, Banku Bihari	Clerk, Health Office, Dist II, Calcutta Corporation	22, Mirzapore Street	ditto

Sinha, Bhujendra Nath	Clerk, Landale & Clark Ld	11, Clive Street	ditto	
Sinha, Chandi Charan	Examiner of Stores, Indian Stores Department (Inspection)	6, Esplanade, East	ditto	
Sinha, Debipada	Clerk, Ralli Bros, Ld	16, Hare Street	ditto	
Sinha, Dwijendra Nath, BL	Assistant, Accountant-General's Office, Bengal	Treasury Buildings	ditto	
Sinha, Gopeshwar, MSC	Head Bill Clerk, Assessor's Department, Calcutta Corporation	Municipal Office	ditto	
Sinha, Hiranya Mohan	Sub-Head, C A O's Office, E I R	E I R House	ditto	
Sinha, Jatindra Mohan	Assistant, Burn & Co, Ld	12, Misson Row	ditto	
Sinha, Jatindra Nath	Assistant, J Thomas & Co	8, Mission Row	ditto	
Sinha, Jatindra Nath	Clerk, Jardine, Skinner & Co	4, Clive Row	ditto	
Sinha, Jatindra Nath, MSC	Professor, Vidyasagar College	39, Shankar Ghose Lane	ditto	
Sinha, Jnanendra Nath	Salesman, Corn Products Co (India), Ld	4, Lyons Range	ditto	
Sinha, Jyotish Chandra	Artist, Imperial Tobacco Co of India, Ld	37, Chowringhee	ditto	
Sinha, Khagendra Nath	Assistant, Greaves Cotton & Co, Ld	60, Dharamtala Street	ditto	
Sinha, Kishori Kanta, MA	Professor, Vidyasagar College	39, Sankar Ghose Lane	ditto	
Sinha, Krishna Chandra, BA	Clerk, Office of the Controller of Army Factory Accounts	6, Esplanade, East	ditto	
Sinha, Kshetra Nath	Assistant, Accountant-General's Office, Bengal	Treasury Buildings	ditto	
Sinha, Lalit Mohan, MA, BT	Assistant Master, Hare School	87, College Street	ditto	

No.	Names.	Style or calling.	Residence or place of business.	Religion.
	Sinha, Manmatha Nath	Assistant, Calcutta University	Senate House	Brahmo
	Sinha, Narendra Nath	Assistant, Excise Commissioner's Office, Bengal	Writers' Buildings	Hindu
	Sinha, Nilmani	Clerk, Jardine, Skinner & Co	4, Clive Row	ditto
	Sinha, Nirmal Chandra	Assistant, Central Stationery Office	3, Church Lane	ditto
	Sinha, Nirmal Kumar, BA	Assistant, Accountant-General's Office, Bengal	Treasury Buildings	ditto
	Sinha, P	Clerk, Burmah-Shell Co of India, Ld	Honkong House	ditto
	Sinha, Panchu Gopal	Examiner of Stores, Indian Stores Department (Inspection)	6, Esplanade, East	ditto
	Sinha, Pins Christy	Clerk, C O P S Office, E I R	E I R House	Christian
	Sinha, Satish Chandra	Clerk, C E E's Office, E I R	E I R House	Hindu
	Sinha, Satish Chandra	Head Designer, Govt School of Art	28, Chowringhee	ditto
	Sinha, Satish Chandra	Head Clerk, Ballardie, Thompson and Matthews	7, Old Court House Street	ditto
	Sinha, Shailendra Nath	Assistant, Calcutta University	Senate House	ditto
	Sinha, Shailendra Nath	Clerk, Factory Inspection Department, Bengal	40-1A, Free School Street	ditto
	Sinha, Sharat Chandra	Clerk, Marine Deptt, South British Insurance Co, Ld	5, Clive Street	ditto
	Sinha, Subodh Chandra	Assistant, Bengal Secretariat, Finance Department	Writers' Buildings	ditto
	Sinha, Surendra Prasad	Assistant, Andrew, Yule & Co, Ld	8, Clive Row	ditto
	Sinha, Suresh Chandra, MA	Assistant, Legislative Department, Bengal	Council House	ditto

Sinha, Tarapada, BA	Assistant, Agri and Inds Department, Bengal	Writers' Buildings	ditto
Sinha, Upendra Nath	Head Clerk, North British & Mercantile Insurance Co, Ld	101-1, Clive Street	ditto
Sinha Ray, Nirmal Prasad	Assistant, Income-tax Office	3, Government Place, West	ditto
Sinna, Rameshwar Nath	Assistant, Andrew, Yule & Co, Ld	8, Clive Row	ditto
Siromoni, Vethamuthu Gnanayudham	Assistant Secretary, National Council, Y M C A	5, Russell Street	ditto
Sofaiman, Mahomed (Maulvi)	Assistant, Bengal Secretariat, Political Deptt	Writers' Buildings	Mahomedan
Srimani, Bata Krishna	Clerk, C E's Office, E I R	E I R House	Hindu
Srimani, Shailendra Nath	Bill Clerk, Geo Henderson & Co, Ld	101-1, Clive Street	ditto
Srirangasayi, Vallari	Examiner of Stores, Indian Stores Department (Inspection)	6, Esplanade, East	ditto
Subhan, M A	Assistant, Makinnon Mackenzie & Co	8, Strand Road	Mahomedan
Subram, Anantaram, B COM	Head Clerk, Jost's Engineering Co, Ld	9B, Mercantile Buildings	Hindu
Subramaney, R	Clerk, Shaw Wallace & Co	4, Bankshall Street	ditto
Subramaniam, Keshavaiyer	Stenographer, South British Insurance Co, Ld	5, Clive Street	ditto
Subramanian, H V	Assistant, Brooke Bond India, Ld	2, Metcalfe Street	ditto
Subramanian, P S	Audit Inspector, Port Commissioners' Office	Strand Road	ditto
Subramanian, S S	Assistant, Brook Bond India, Ld	2, Metcalfe Street	ditto
Suchak, V M	Canvasser, Imperial Chemical Industries (India), Ld	18, Strand Road	ditto
Sud, Lakshmi Narayan	Clerk, Allahabad Bank, Ld	6, Royal Exchange Place	ditto

No.	Names.	Style or calling.	Residence or place of business.	Religion.
	Sukla, Loknath	Assistant, Allahabad Bank, Ld	6, Royal Exchange Place	Hindu
	Sukul, Laltaprasad	Lecturer, Calcutta University	Senate House	ditto
	Sukul, Satya Narayan	Clerk, Allahabad Bank, Ld	6, Royal Exchange Place	ditto
	Sur, Bipin Bihari, BA	Assistant, Education Department, Bengal Secretariat	Writers' Buildings	ditto
	Sur, Gour Chandra	Clerk, Calcutta Improvement Trust	5, Clive Street	ditto
	Sur, Jyotiprasad	Clerk, C A O's Office, E I R	E I R House	ditto
	Sur, Kamini Kumar	Assistant, A-G's Office, Bengal	Treasury Buildings	ditto
	Sur, Nandalal	Clerk, C O P S Office, E I R	E I R House	ditto
	Sur, Panchanan	Assistant, Mackinnon, Mackenzie & Co	16, Strand Road	ditto
	Sur, Panchu Gopal	Clerk, Depositor's Deptt, Imperial Bank of India	Strand Road	ditto
	Sur, Sachidananda	Clerk, C R Office, E I R	E I R House	ditto
	Sur, Satish Chandra	Clerk, C R Office, E I R	E I R House	ditto
	Sur, Satya Charan	Clerk, Jardine, Skinner & Co	4, Clive Row	ditto
	Sur, Satya Prasanna	Assistant, Bird & Co	1-1, Clive Street	ditto
	Sur, S M	Assistant, Oriental Government Security Life Assurance Co, Ld	2, Clive Row	ditto
	Suryanarayana, N	Stenographer, Roberts, MacLean & Co, Ld	101, Clive Street	ditto
	Swami, Ramchandra Yagna	Assistant, Nestle & Anglo-Swiss Condensed Milk (Export) Co, Ld	9A, Clive Street	ditto
	Swami, V M	Assistant Accountant, Remington Rand Inc	3, Council House Street	ditto
	Swaminathan, Kandadi Subramania	Assistant, Govan Bros, Ld	20, Park Street	ditto
	T			
	Talapatra, Atul Chandra	Assistant Accountant, P H D, Bengal	3, Charnock Place	Hindu
	Talati, Bejon B, BCOM	Internal Auditor, Central Bank of India, Ld	100, Clive Street	Zoroastrian

Talati, Dassabhai Edulji	Assistant, Ralli Bros, Ld	16, Hare Street	ditto
Talati, E P	Accountant, Adamjee Hajee Dawood & Co, Ld	5, Dalhousie Square, East	ditto
Talukdar, A H	Assistant, Meyer & Co	6-3, Lindsay Street	Mahomedan
Talukdar, Ishaq Ali, BA	Examiner of Accounts, Income-tax Office	1, Hare Street	ditto
Tandan, Kanhia Lal	Assistant, Allahabad Bank, Ld	6, Royal Exchange Place	Hindu
Tandon, Shyam Sundar	Clerk, Allahabad Bank, Ld	6, Royal Exchange Place	ditto
Tandon, Sree Narain	Salesman (Engr) Volkart Brothers	11, Clive Street	ditto
Tara, M R	Assistant, Grahams Trading Co (India), Ld	6, Lyons Range	Zoroastrian
Tarafdar, Shyamapada, BSC	Assistant, Bengal Secretariat, Judicial Department	Writers' Buildings	Hindu
Tripati, Beni Shankar	Clerk, C A O's Office, E I R	E I R House	ditto
Trivedi, Krishnapada	Assistant, Accounts Department, Calcutta Corporation	Municipal Office	ditto

U

Udeshi, Dwarkadas Vithaldas	Salesman, Greaves Cotton & Co, Ld	60, Dharamtala Street	Hindu
Upadhyaya, Amarendra Nath	Clerk, C O P S Office, E I R	E I R House	ditto
Upasani, Balkrishna	Assistant, Eastern Bank, Ld	9, Clive Street	ditto

V

Vajifdar, N H	Proby Assistant, Imperial Bank of India	Strand Road	Hindu
Vanchipathan, R	Assistant Electrical Engineer, E I R	E I R House	ditto
Varadhachari, S	Stenographer, Macmillan & Co, Ld	294, Bowbazar Street	ditto
Varma, Devi Prasad	Clerk, Allahabad Bank, Ld	6, Royal Exchange Place	ditto
Varma, Puttan Lal	Clerk, C A O's Office, E I R	E I R House	ditto

No.	Names.	Style or calling.	Residence or place of business.	Religion.
	Varma, Shew Sankar	Clerk, C A O's Office, E I R	.. E I R House	Hindu
	Venkataram, M S	Museum Assistant, Geological Survey of India ..	.. 27, Chowringhee	ditto
	Venkateswar, Ayakad Krishna ..	Stenographer, Tata Iron and Steel Co, Ld ..	.. 100, Clive Street	ditto
	Venugopalam, K	Assistant, Sun Life of Canada	.. 12, Dalhousie Square, East ..	ditto
	Viswanath, Peruvemba Krishna ..	Assistant, National Fire and General Insurance Co, Ld	.. 7, Council House Street	ditto
	Vishwanathan, A	Assistant Engineer, G E C (India), Ld	.. Magnet House, Chittaranjan Avenue (South)	ditto
	Vyas, V N	Accountant, Adamjee Hajee Dawood & Co, Ld ..	.. 5, Dalhousie Square, East ..	ditto
	W			
	Wahhab, Abul Mukarem Fazlul ..	Librarian, Calcutta Madrassah ..	.. 19, Wellesley Square	Mahomedan
	Wahshat, Reza Ali (Khan Bahadur) ..	Lecturer, Islamia College ..	.. 8, Wellesley Street	ditto
	Y			
	Yunnus, Mahomed	Assistant, Income-tax Office	.. 1, Hare Street	Mahomedan
	Z			
	Zahiruddin	Sub-Head, C A O's Office, E I R	.. E I R House	Mahomedan
	Zain-ul-Abedin	Assistant, Office of the Director of Industries, Bengal	.. 40-1A, Free School Street ..	ditto
	Zaman, Md Q	Assistant, Imperial Record Department	.. 3, Government Place, West ..	ditto

O. MOSES,
Clerk of the Crown.

Special Jury List

List of persons liable to serve on Special Juries in the High Court of Judicature at Fort William in Bengal for the year ensuing from 1st May 1935 pursuant to Act V of 1898.

Remarks.—Errors in names and descriptions can be corrected on communication to the office of the Clerk of the Crown. Revised list will be published on the 25th day of April 1935. Any person who deems himself for any reason wrongly included in the list should address the Clerk of the Crown on the subject immediately as the revised list will be final.

No.	Names.	Style or calling.	Residence or place of business.	Religion.
	A			
	Abbott, Ernest George	Partner, Macneill & Co	2, Fairlie Place	Christian
	Abbott, Henry John Eastwood	Director, Imperial Tobacco Co of India, Ld	37, Chowringhee	ditto
	Ackroyd, Christopher	Professor, St. Paul's College	33-1, Ahmerst Street	ditto
	Acton, E	Director, Earl, Acton & Co, Ld	D5, Clive Buildings	ditto
	Adam, Alexander Ballantine	Assistant, Allahabad Bank, Ld	6, Royal Exchange Place	ditto
	Adam, Harry	Manager, Paterson Engineering Co (India), Ld	2, Dalhousie Square	ditto
	Affleck, A K	Director, H Hobbs & Co, Ld	9, Old Court House Street	ditto
	Agnew, W V	Accountant, Burmah-Shell Co of India, Ld	Hongkong House	ditto
	Ainscough, J P	Assistant, Shaw Wallace & Co	4, Bankshall Street	ditto
	Ainslie, Kenneth	Assistant, F W Heilgers & Co	1-1, Clive Street	ditto
	Aitken, James	Manager, James Finlay & Co, Ld	1, Clive Street	ditto
	Alcock, R	Assistant, W J Alcock & Co	7, Hastings Street	ditto

No.	Names.	Style or calling.	Residence or place of business.	Religion.
	Alcock, Robert J	Assistant, Balmer Lawrie & Co, Ld	103, Clive Street	Christian
	Alcock, W J	Consulting and Chemical Engineer	7, Hastings Street	ditto
	Alexander, James Nathaniel Bosanquet	Manager, Stewarts & Lloyds, Ld	6, Royal Exchange Place ..	ditto
	Alexandroff, Alexander John ..	Assistant, Ralli Bros, Ld	16, Hare Street	ditto
	Alford, R S M	Assistant, Lipton, Ld	9, Weston Street	ditto
	Allan, T T K	Manager, National Bank of India, Ld	104, Clive Street	ditto
	Allen, C H	Secretary, Sun Life of Canada	12, Dalhousie Square, East ..	ditto
	Allen, Geoffrey Lea	Assistant, Bird & Co	1-1, Clive Street	ditto
	Allinson, H J	District Electrical Engineer, E I R	E I R House	ditto
	Allistou, L H	Director, L H Alliston & Co, Ld	B-5, Clive Buildings	ditto
	Alloway, Herbert Essex	Manager, Supply Department, Imperial Tobacco Co of India, Ld	37, Chowringhee	ditto
	Anastasiadi John Pelopidas ..	Assistant, Ralli Brothers, Ld	16, Hare Street	ditto
	Anderson, Allan	Assistant, Hoare Miller & Co, Ld	5, Fairlie Place	ditto
	Anderson, D Y	Traffic Manager & Secretary, Baraset-Basirhat Light Ry. (Martin & Co.)	12, Mission Row	ditto
	Anderson, Mills Finlay	Accountant, Martin & Co	12, Mission Row	ditto
	Andrews, P T	Assistant (2nd Grade), Imperial Bank of India	Strand Road	ditto
	Anstuy, B A	Manager for India, Scottish Union & National Insurance Co. ..	6, Lyons Range	ditto.
	Anthony, L	Proprietor, John Lewis & Co.	1, British Indian Street ..	ditto
	Antrobus, Hinson Allan ..	Director, Begg, Dunlop & Co, Ld	2, Hare Street	ditto
	Apostdides, Michael Demosthenes ..	Assistant, Ralli Bros, Ld ..	16, Hare Street	ditto

Armour, R	Managing Director, R K O Radio Pictures, Ld	Tower House		ditto
Armstrong, W L	Director, Villiers, Ld	F-3, Clive Buildings		ditto
Arnold, Kenneth Noss	Engineer, Martin & Co	12, Mission Row		ditto
Arratoon, G A	Partner, Arratoon & Co, Ld	5, Dalhousie Square, East		ditto
Arthern, M	Managing Director, Winter Bros	Mercantile Buildings		ditto
Arthur, Charles Gordon	Partner, Jardine, Skinner & Co	4, Clive Row		ditto
Arthur, R S	Assistant, Lovelock & Lewis	4, Lyons Range		ditto
Ashmore, Fred	Assistant Engineer, Inspection, Indian Stores Department	6, Esplanade East		ditto
Atherton, Alfred Edward	Manager, G Atherton & Co (Eastern), Ld	8, Clive Street		ditto
Atkins, J W	Electrical Engineer, Octavius Steel & Co, Ld	14, Old Court House Street		ditto
Atkins, M R	Chief Engineer, Calcutta Improvement Trust	5, Clive Street		ditto
Austin, George John	Director, J B Norton & Sons, Ld	Norton Buildings		ditto

B

Baggs, James Patrick	Assistant, Gillanders Arbuthnot & Co	8, Clive Street		Christian
Bagnall, John F	Assistant, Macneill & Co	2, Fairlie Place		ditto
Bailey, W E	Sr Assistant, Shaw, Wallace & Co	4, Bankshall Street		ditto
Baird, William Douglas	Assistant, Williamson Magor & Co	4, Mangoe Lane		ditto
Baker, Reginald George	Director, Imperial Tobacco Co of India, Ld	37, Chowringhee		ditto
Baker, R J	Manager, Sun Life of Canada	12, Dalhousie Square, East		ditto
Balance, Charles	General Manager, Paramount Films, Ld Inc.	170, Dharamtala Street		ditto
Ballantyne, Herbert Samuel Binning	Mains Engineer, C E S C, Ld	Victoria House		ditto

No.	Names.	Style or calling.	Residence or place of business.	Religion.
	Bannerman, Henry Campbell	Assistant, Macneill & Co	2, Fairlie Place	Christian
	Bannett, N C W	Assistant Commercial Manager, E I R	E I R House	ditto
	Barber, H E	Deputy Valuer, Calcutta Improvement Trust	5, Clive Street	ditto
	Barbour, Archibald Robertson	Assistant, F W Heilgers & Co	1-1, Clive Street	ditto
	Barling, Francis Gilbert Bonner	Director, Mutual Indemnity & Finance Corporation (India), Ld	32-1, Dalhousie Square	ditto
	Barnes, O J	Agent, Hongkong & Shanghai Banking Corporation	Hongkong House	ditto
	Barrett, Harold	Manager. Houghton, Butcher (Eastern), Ld	10, Hungerford Street	ditto
	Bartholomew, G	Chartered and Consulting Engineer	7, Old Court House Street	ditto
	Bartlett, J R H	Managing Director, R V Briggs & Co, Ld	8-B, Lall Bazar Street	ditto
	Basil, S A	Director, Talbot & Co	Tower House, Chowringhee Square	ditto
	Batchelor, G F F	Partner, James Luke & Sons	7, Royal Exchange Place	ditto
	Bateman, Hugh Fitz Herbert	Partner, Shaw, Wallace & Co	4, Bankshall Street	ditto
	Bates, Percy	Assistant, Kilburn & Co	4, Fairlie Place	ditto
	Bateson, Isaac	Assistant Manager, Indian School Supply Depot	Chittaranjan Avenue, South	ditto
	Battey, Wilfred Bruce Kenyon	Assistant, Battey and Kemp	9, Ezra Mansions	ditto
	Battey, Wilfred Kenyon	Proprietor, Battey & Kemp	9, Ezra Mansions	ditto
	Battle, Frank	Bank Manager, Thos Cook & Son	4, Dalhousie Square	ditto

Baxter, C W	Director, Halley Brothers, Ld	135, Canning Street		ditto
Bayne, James Smith	Assistant Accountant, National Bank of India, Ld	104, Clive Street		ditto
Beastall, Philip Charles	Assistant Engineer, Inspection, Indian Stores Department	6, Esplanade East		ditto
Beatt, D H	Assistant, Mackinnon, Mackenzie & Co	16, Strand Road		ditto
Bell, Ralph Lane	Director, Imperial Tobacco Co of India, Ld	37, Chowringhee		ditto
Bellamy, Ernest Adolphose	Assistant, F W Heilgers & Co	1-1, Clive Street		ditto
Benjamin, J A	Partner, Innes Watson & Co	15, Clive Row		Jew
Bennett, H K	Head Engineer, Calcutta Mint	47, Strand Road		Christian
Benson, George	Manager, David Sassoon & Co, Ld	4, Lyons Range		ditto
Bent, W A L	Assistant, George Henderson & Co, Ld	101-1, Clive Street		ditto
Bent, William	Managing Director, Callender's Cable & Construction Co, Ld	54, Ezra Street		ditto
Benthall, A P	Assistant, Bird & Co	1-1, Clive Street		ditto
Bentha'l, E C (Sir)	Partner, Bird & Co	1-1, Clive Street		ditto
Benwell, William Sydney	Accountant, Duncan Brothers & Co, Ld	101, Clive Street		ditto
Berger, J P W, M A	Assistant, Britannia Biscuit Co, Ld	Stephen House		ditto
Bernard, P	Sub-Accountant, Imperial Bank of India	Strand Road		ditto
Berry, W E	Assistant Secretary, Scottish Union & National Insurance Co	6, Lyons Range		ditto

No.	Names.	Style or calling.	Residence or place of business.	Religion.
	Berthoud, Ernest Alfred	Partner, Berthoud & Co	6, Royal Exchange Place	Christian
	Berthoud, George Felix	Partner, Berthoud & Co	6, Royal Exchange Place	ditto
	Biggar, Allan	Assistant, F W Heilgers & Co	1-1, Clive Street	ditto
	Biggs, W J	Chief Accountant, G E C (India), Ld	Magnet House, Chittaranjan Avenue (South).	ditto
	Bilton, Norman Cooper	Chief Engineer, Bengal Telephone Corporation, Ld	8, Hare Street	ditto
	Bimming, Harold Angus	Partner, Thos Seth Apcar & Co	F-1, Clive Buildings	ditto
	Binns, Cecil Arthur	Assistant, Cook & Kelvey	20, Old Court House Street	ditto
	Bird, J A G	Assistant, Shaw Wallace & Co	4, Bankshall Street	ditto
	Birtwistle, R E	Assistant, Landale & Morgan	3, Fairlie Place	ditto
	Bishop, A H	Director, Guest, Keen, Williams, Ld	7, Council House Street	ditto
	Bishop, H C W	Director, Balmer, Lawrie & Co, Ld	103, Clive Street	ditto
	Black, R J	Manager, Maitland, Craig, Ld	E-2, Clive Buildings	ditto
	Black, W A	Partner, Reed Ward & Co	6, Lyons Range	ditto
	Blair, F L	Head Assistant, Branch Dept, Imperial Bank of India	Strand Road	ditto
	Blair, John	Assistant, James Finlay & Co, Ld	1, Clive Street	ditto
	Bland, Charles Roxberry	Manager for India, W T Henley's Telegraph Works Co, Ld	Old Court House Corner	ditto
	Bland, R A H	Sub-Accountant, Mercantile Bank of India, Ld	8, Clive Street	ditto

Blease, A C T	Traffic Manager, Calcutta Tramways Co, Ld	7, Church Lane	ditto
Blewitt, H	Assistant, Gladstone Wyllie & Co	4, Fairlie Place	ditto
Blomenstock, Leonard Mark	Partner, Piggott Chapman & Co	6, Lyons Range	ditto
Boak, C F	Assistant, Heatly & Gresham, Ld	6, Waterloo Street	ditto
Bolam, Joseph Harding, MSc	Engineer, Martin & Co	12, Mission Row	ditto
Bolland, Partrick Henry	Manager, Greaves Cotton & Co, Ltd	60, Dharamtala Street	ditto
Bolst, Wilton James	Bullion Registrar, Calcutta Mint	47, Strand Road	ditto
Bond, C L	Assistant, Standard-Vacuum Oil Co	6, Church Lane	ditto
Booker, Alfred	Manager, William Jacks & Co	10, Clive Street	ditto
Bourne, L P S	Assistant, Mackinnon, Mackenzie & Co	16, Strand Road	ditto
Bowman, Thomas Sellar	News Editor, *Statesman*, Ld	Statesman House	ditto
Bradshaw, Francis Henry	Director, Hoare Miller & Co, Ld	5, Fairlie Place	ditto
Bradshaw, W	Director, G Atherton & Co (Eastern), Ld	E-4, Clive Buildings	ditto
Bragg, B A	Manager, Queensland Insurance Co, Ld	6, Royal Exchange Place	ditto
Braham, A E	Manager, A Bradley & Co	8, Old Court House Corner	Jew
Brain, N T	Director, Brooke Bond, Ld	2, Metcalfe Street	Christian
Bredee, G Leslie	Assistant, Andrew Yule & Co, Ld	8, Clive Row	ditto
Brentford, C G	Assistant, Imperial Chemical Industries (India), Ld	18, Strand Road	ditto
Briggs, R V	Director, R V Briggs & Co, Ld	8-B, Lall Bazar Street	ditto
Brims, Alistair	Director, British India Publishing Co	Stephen House	ditto

No.	Names.	Style or calling.	Residence or place of business.	Religion.
	Bristow, William George Bissett	Director, Imperial Tobacco Co of India, Ld	37, Chowringhee	Christian
	Brittain, S S W	Manager, Grindlay & Co, Ld	6, Church Lane	ditto
	Brodie, N	Assistant, Gladstone Wyllie & Co	4, Fairlie Place	ditto
	Brodie, William C G	Manager, Lionel Edwards, Ld	D1, Clive Buildings	ditto
	Brodie, William James Wilson	Partner, Ziffo & Co	5, Garstins Place	ditto
	Brooks, Alec William	Manager for India, Caledonian Insurance Co	8, Clive Street	ditto
	Brown, A E	Director, Hall & Anderson, Ld	31, Chowringhee	ditto
	Brown, Alex Jas	Director, Great Eastern Hotel, Ld	1, 2 & 3, Old Court House Street	ditto
	Brown, C (Capt.)	Marine Superintendent, Mackinnon Mackenzie & Co	16, Strand Road	ditto
	Brown, David Christie, BSc	Director, May & Baker (India), Ld	11, Clive Street	ditto
	Brown, Gordon Forbes	Assistant, Bird & Co	1-1, Clive Street	ditto
	Brown, J A Campbell	Surveyor, Norman Stewart & Co	9, Clive Street	ditto
	Brown, James Alexander	Manager, C C Wakefield & Co, Ld	7, Royal Exchange Place	ditto
	Brown, James Archibald	Director, Duncan Bros & Co, Ld	101, Clive Street	ditto
	Brown, K N	Agency Manager, Manufacturers Life Insurance Co	27, Dalhousie Square	ditto
	Brown, William Lothian	Deputy General Manager, Allahabad Bank, Ld	6, Royal Exchange Place	ditto
	Bruce, E	Assistant, Balmer Lawrie & Co, Ld	103, Clive Street	ditto

Bryan, Bailey Tyler ..	.. Partner, Thos Seth Apcar & Co ..	.. F-1, Clive Buildings ..	..	ditto
Buchan, David Gibb ..	.. Assistant, Andrew Yule & Co, Ld ..	.. 8, Clive Row ..	..	ditto
Buchanan, J ..	.. Senior Proprietor, Buchanan Sons & Co ..	.. Grosvenor House ..	..	ditto
Buchanan, James, MA ..	.. Physical Director to the Government of Bengal ..	.. Writers' Buildings ..	..	ditto
Buckland, Frederick Mackintosh ..	Partner, Blacker & Co ..	.. 2, Clive Street ..	..	ditto
Buckler, R L B ..	District Manager, Lloyds Bank, Ld ..	.. 101-1, Clive Street ..	..	ditto
Budd, Charles William ..	.. Engineer, Alfred Herbert (India), Ld ..	.. 13-3, Strand Road ..	..	ditto
Buist, I D C ..	.. Assistant, A M Mair & Co ..	.. 6, Royal Exchange Place	..	ditto
Bulger, Daniel D ..	.. Handicapper, Royal Calcutta Turf Club ..	.. 11, Russell Street ..	..	ditto
Bullock, Herbert Stanley ..	Assistant Manager, Phoenix Assurance Co, Ld ..	.. 28, Dalhousie Square ..	..	ditto
Bungey, W A ..	.. Assistant, Turner, Morrison & Co, Ld ..	.. 6, Lyons Range ..	..	ditto
Burder, J H ..	.. Partner, Jardine, Skinner & Co ..	.. 4, Clive Row ..	..	ditto
Burkinshaw, H R ..	.. Assistant, Jessop & Co, Ld ..	.. 93, Clive Street ..	..	ditto
Burns, J M ..	.. Partner, W J Walker & Co ..	.. 6, Commercial Buildings	..	ditto
Burrows-Watson, Philip Henry ..	General Manager, Ellerman's Arracan Rice & Trading Co, Ld	26, Dalhousie Square ..	..	ditto

C

Caine, George William Robert ..	Chartered Accountant, Begg Dunlop & Co, Ld ..	.. 2, Hare Street ..	..	Christian
Caldwell, Alexander, BSc ..	Assistant, Gillanders Arbuthnot & Co ..	.. 8, Clive Street ..	..	ditto

No.	Names.	Style or calling	Residence or place of business.	Religion.
	Cambridge, S J P ..	.. Bridge Engineer, E I R ..	.. E I R House ..	.. Christian
	Cameron, Alec Leslie ..	.. Director, Andrew Yule & Co, Ld ..	.. 8, Clive Row ..	.. ditto
	Campbell, George Riddoch	.. Partner, Mackinnon, Mackenzie & Co ..	.. 16, Strand Road ..	.. ditto
	Campbell, I P F ..	.. Director, Turner, Morrison & Co, Ld ..	.. 6, Lyons Range ..	.. ditto
	Campbell, R H D ..	.. Assistant, Shaw Wallace & Co ..	.. 4, Bankshall Street ..	.. ditto
	Campbell-Jones, H ..	.. Managing Director, Bombay Co, Ld ..	.. 19, British Indian Street ..	.. ditto
	Candy, W E, MA ..	.. General Manager, Longmans Green & Co, Ld ..	.. 6, Old Court House Street ..	.. ditto
	Canning, Walter Howard	.. Mains Engineer, C E S C, Ld ..	.. Victoria House ..	.. ditto
	Cantelo, Alfred ..	.. Assistant, Bird & Co ..	.. 1-1, Clive Street ..	.. ditto
	Carmichael, Charles Alexander	.. Assistant, Andrew Yule & Co, Ld ..	.. 8, Clive Row ..	.. ditto
	Carpenter, Francis William Allan	.. Manager, Burn & Co, Ld ..	.. 12, Mission Row ..	.. ditto
	Carson, A P	.. Assistant, Babcock & Wilcox, Ld ..	.. 4, Bankshall Street ..	.. ditto
	Carson, Murray Alexander	.. Manager, Ralli Bros, Ld ..	.. 16, Hare Street ..	.. ditto
	Carter, E J ..	.. Partner, Lovelock & Lewes ..	.. 4, Lyons Range ..	.. ditto
	Carter, R S ..	.. Acting Manager, Thacker Spring & Co (1933), Ld ..	.. 3, Esplanade, East ..	.. ditto
	Carter, H L ..	.. District Signal Engineer, E I R ..	.. E I R House ..	.. ditto
	Cashmore, A ..	.. Assistant, Turner Morrison & Co, Ld ..	.. 6, Lyons Range ..	.. ditto
	Cavanagh, Max J ..	.. Manager, National City Bank of New York ..	.. 4, Clive Street ..	.. ditto

Caven, John William	..	Chief Accountant, C E S C, Ld	..	Victoria House .. ditto
Chadwick, F D	..	Manager, Mather & Platt, Ld	..	7, Hare Street .. .. ditto
Chalmers, Wm	..	Partner, Perman & Hynd	..	9, Clive Street .. .. ditto
Chambers, D W	..	Chief Accountant, I G N & Ry Co, Ld	..	4, Fairlie Place .. .. ditto
Chandler, James Harmer	..	Manager, English Electric Co, Ld	..	D-4, Clive Buildings .. .. ditto
Christie, Thomas Jack	..	Manager, Standard Life Assurance Co	..	32, Dalhousie Square .. .. ditto
Christie, Thomas Murray Delamare	..	Inspector of Tea Gardens, Begg Dunlop & Co, Ld	..	2, Hare Street .. .. ditto
Chubb, Albert Edwin	..	Director, Alfred Herbert (India), Ld	..	13-3, Strand Road .. .. ditto
Church, John William Godsden	..	Mains Engineer, C E S C, Ld	..	Victoria House .. .. ditto
Clark, A	..	Assistant Branch Manager, John King & Co, Ld	..	Flat No 1, 54, Chowringhee .. ditto
Clark, B W	..	Manager, Allen & Hanburys, Ld	..	Clive Buildings .. .. ditto
Clark, Leonard Alfred	..	Director, R Sim & Co, Ld	..	2, Clive Row .. .. ditto
Clark, Robert Wilson, B SC	..	Engineer, John King & Co, Ld	..	12, Russell Street .. .. ditto
Clarke, C E	..	Manager, Whiteaway Laidlaw & Co, Ld	..	7, Chowringhee .. .. ditto
Cleghorn, Colin	..	Assistant, Anderson Wright & Co	..	22, Strand Road .. .. ditto
Clowes, S T	..	General Manager, W & T Avery, Ld	..	28, Waterloo Street .. .. ditto
Cochran, William Banks	..	Assistant, Blackwood Blackwood & Co	..	4, Lyons Range .. .. ditto

No.	Names.	Style or calling.	Residence or place of business.	Religion.
	Cockle, Harold Francis James Maurice	Assistant, Andrew Yule & Co, Ld	8, Clive Row	Christian
	Cohen, Abraham Fredrick	Manager, E Meyer & Co (1926), Ld	2, Clive Ghat Street	Jew
	Cohen, D J	Landholder	11, Camac Street	ditto
	Cohen, E A	Landholder	16, Loudon Street	ditto
	Cohen, I H	Landholder	99, Prinsep Street	ditto
	Cohen, Immanuel Jacob	Landholder	99, Prinsep Street	ditto
	Cole, Dudley Maurice	Assistant, Caledonian Printing Co, Ld	3, Wellesley Place	ditto
	Colley, Abel Rex	Assistant Commercial Manager, C E S C, Ld	Victoria House	ditto
	Collin, Evelyn Ashley	Director, Davenport & Co, Ld	6, Church Lane	Christian
	Collingwood, Frank	House & Estate Agent	13-1 & 13-2, Government Place, East	ditto
	Collins, Alfred George	Revenue Superintendent, C E S C, Ld	Victoria House	ditto
	Collis, R N	Chief Accountant, Lipton, Ld	9, Weston Street	ditto
	Colman, C J	Superintendent, Jetties, Port Commissioners Office	Strand Road	ditto
	Colquhoun, Samuel	Manager, Litho, Surveyor-General's Office	14, Wood Street	ditto
	Coltart, Hugh Frederick	Partner, Mackenzie Lyall & Co	5, Mission Row	ditto
	Colvin, H E	Partner, McLeod & Co	28, Dalhousie Square	ditto
	Comerton, James	Accountant, Martin & Co	12, Mission Row	ditto
	Cooper, Charles G	Partner, Brady & Co	2, Fairlie Place	ditto
	Cooper, H G	Acting Branch Manager, Burmah-Shell Co of India, Ld	Hongkong House	ditto
	Cooper, Raymond Corry	Managing Agent, Landale & Clark, Ld	11, Clive Street	ditto
	Corbould, Eric Chilton	Managing Director, H L Rochat & Co (Calcutta), Ld	54, Ezra Street	ditto

Cordwell, Ernest Thomas	Assistant, Bird & Co	1-1, Clive Street	..	..	ditto
Cormack, Albert John	Manager (Calcutta Office), W T Henley's Telegraph Works Co, Ld	Old Court House Corner	..	..	ditto
Corn, Harry Edward, M I E	Manager, John Thompson (Wolverhampton), Ld	4, Fairlie Place	..	..	ditto
Cornah, W R	Tailor & Outfitter	18-B, Park Street	..	..	ditto
Corrie, Thomas Edgar	Partner, King Bros	102, Clive Street	..	..	ditto
Corsar, C L	Assistant, Mackinnon Mackenzie & Co	16, Strand Road	..	..	ditto
Coulthard, John Robert	Partner, Place, Siddons & Gough	6, Lyons Range	..	..	ditto
Counsell, Arthur Hope	Manager, Blackie & Son (India), Ld	285-11, Bowbazar Street	..	..	ditto
Cowan, D S	Assistant, Balmer, Lawrie & Co, Ld	103, Clive Street	..	..	ditto
Cowie, Adam	Assistant, Macneill & Co	2, Fairlie Place	..	..	ditto
Cowper, Ian Hugh, M.A., B.COM	Accountant, Royal Calcutta Turf Club	11, Russell Street	..	..	ditto
Crabtree, H H	Professor, St Paul's Cathedral College	33-1, Amherst Street	..	..	ditto
Craig-Williams, Edward	Assistant, Bird & Co	1-1, Clive Street	..	..	ditto
Craven, Archer Roy	Managing Director, George Spencer, Moulton & Co (India), Ld	8, Esplanade, East	..	..	ditto
Crawford, C A	Superintendent (S S), C C M's Office, E I R	E I R House	..	..	ditto
Crawley, George Francis	News Editor, Statesman, Ld	Statesman House	..	..	ditto
Crichton, Frank	Assistant, Andrew Yule & Co, Ld	8, Clive Row	..	..	ditto

Names.	Style of calling.	Residence or place of business.	Religion.
Cromartie, R D ..	.. Manager, Mercantile Bank of India, Ld ..	.. 8, Clive Street ..	.. Christian
Cronopulo, John Anthony	.. Assistant, Ralli Bros, Ld ..	.. 16, Hare Street ..	.. ditto
Crooks, G R ..	.. Assistant, Price Waterhouse, Peat & Co ..	.. B-4, Clive Buildings ..	.. ditto
Cross, C Stratton ..	.. Assistant, Remfry & Son ..	.. Stephen House ..	.. ditto
Cruickshank, Geo ..	.. General Manager, Lipton, Ld ..	.. 9, Weston Street ..	.. ditto
Cubitt, Frederick Salter	.. Partner, Poppe Delius & Co ..	.. 2 & 3, Clive Row ..	.. ditto
Cuckow, K M ..	.. Principal, Armenian College ..	.. 39, Free School Street ..	.. ditto
Cuddeford, E J ..	.. Assistant, Jardine Skinner & Co ..	.. 4, Clive Row ..	.. Ditto
Comberbatch, Hugh Douglas	.. Director, Andrew Yule & Co, Ld ..	.. 8, Clive Row ..	.. ditto
Cumming, D J ..	.. Accountant, Imperial Chemical Industries (India), Ld	.. 18, Strand Road ..	.. ditto
Cummings, John Eric ..	.. Assistant, Ralli Bros, Ld ..	.. 16, Hare Street ..	.. ditto
Curlender, Hugh ..	.. Partner, S Curlender & Co ..	.. 8, Old Court House Corner ..	Jew
Curlender, J ..	.. Partner, S Curlender & Co ..	.. 8, Old Court House Corner ..	ditto
Curlender, Moses ..	.. Partner, S Curlender & Co ..	.. 8, Old Court House Corner ..	ditto
Curlender, R ..	.. Partner, S Curlender & Co ..	.. 8, Old Court House Corner ..	ditto
Currie, A H ..	.. Assistant, W H Haworth & Co ..	.. 1, Commercial Buildings ..	.. Christian
Curtis, R C ..	.. District Commercial Officer (Claims), B N Ry ..	.. 4, Lord Sinha Road ..	.. ditto
D			
D'Auvergne, Verner (Capt.) M C	.. Superintendent, Victoria Memorial Hall ..	.. Victoria Memorial Hall ..	.. Christian
D'Costa, Oscar Hilton ..	.. Head Assistant, Bengal Secretariat, Commerce Department	.. Writers' Buildings ..	.. ditto
Dale, Alfred George ..	.. Assistant, Andrew Yule & Co, Ld ..	.. 14, British Indian Street	.. ditto

Dales, Hartley Horace, BA (Cantab)	Assistant, Commercial Union Assurance Co, Ld	32, Dalhousie Square		ditto
Dalgarno, Douglas James	Director, Marshall Sons & Co (India), Ld	99, Clive Street		ditto
Dalgarno, W	Assistant, Mackinnon Mackenzie & Co	16, Strand Road		ditto
Dalziel, Alfred Robert Joslin	Head Engraver, Survey of India	13, Wood Street		ditto
Dand, J	Chief Accountant, Port Commissioners' Office	Strand Road		ditto
Daniels, A P	Sub-Agent, Chartered Bank of India, Australia and China	1-1, Clive Street		ditto
Darby, Stanley Charles	Assistant Manager, Prudential Assurance Co, Ld	Clive Buildings		ditto
Davidge, Cuthbert Roy	Assistant Manager, Union Insurance Society of Canton, Ld	8, Clive Street		ditto
Davidson, George	General Manager, Corn Products Co (India), Ld	4, Lyons Range		ditto
Davidson, James Ramsay	Manager, H H Robertson Co	4, Lyons Range		ditto
Davidson, Ronald James Robertson	Assistant, Andrew Yule & Co, Ld	8, Clive Row		ditto
Davidson, R O	Assistant, McLeod & Co	28, Dalhousie Square		ditto
Davies, A	Assistant Secretary, Imperial Tobacco Co of India, Ld	37, Chowringhee		ditto
Davies, G J	General Manager, John Dewar and Sons, Ld	12, Hare Street		ditto
Davies, R H	Accountant, Grindley & Co, Ld	6, Church Lane		ditto
Davis, George Herbert	Partner, Piggott, Chapman & Co	6, Lyons Range		ditto
Davy, Horace Frederick	Controller of Inspection, Indian Stores Department	6, Esplanade, East		ditto
Dawson, James	Manager, Cox & Kings (Agents), Ld	5, Bankshall Street		ditto

No.	Names.	Style or calling.	Residence or place of business.	Religion.
	Daymond, J B ..	.. Editor, *A A B Magazine* ..	.. 41, Galstaun Mansions	Christian.
	Deane, E S (Capt) ..	.. Starter, Royal Calcutta Turf Club ..	.. 11, Russell Street	ditto
	Deeks, William Gordon ..	.. Partner, Cooke & Kelvey ..	.. 20, Old Court House Street ..	ditto
	Delph, C J ..	.. Representative for the East, Baird & Talcock (London) Ld	.. Avenue House, Chowringhee Square	ditto
	Demetriadi, Constantine George	.. Assistant, Ralli Bros, Ld ..	.. 16, Hare Street	ditto
	Demetrius, St. John ..	.. Chartered Accountant, George Read & Co ..	.. Avenue House, Chowringhee Square ..	ditto
	Denny, George Richard ..	.. Agent, Central Agency, Ld ..	.. Norton Buildings	ditto
	Dias, L ..	.. Head Assistant, Bengal Secretariat, Specia' Branch ..	.. Writers' Buildings	ditto
	Dickens, D G ..	.. Superintendent, C C M's Office, E I R ..	.. E I R House	ditto
	Dickson, David Law ..	.. Partner, Normans Ross & Co ..	.. 3, Clive Street	ditto
	Dickson, James ..	.. Assistant Accountant, National Bank of India, Ld ..	.. 104, Clive Street	ditto
	Dickson, William ..	.. Partner, Perman & Hynd ..	.. 9, Clive Street	ditto
	Dilks, C	.. Proprietor, Dilks & Co ..	.. 15-2, Chowringhee	ditto
	Dines, W F ..	.. Manager, Angello Bros, Ld ..	.. 6, Lyons Range	ditto
	Dixon, John ..	.. Superintending Engineer, R S N Co ..	.. 2, Fairlie Place	ditto
	Dobeson, R G ..	.. Assistant, Burn & Co, Ld ..	.. 12, Mission Row	ditto
	Docherty, A S ..	.. Assistant, Balmer Lawrie & Co, Ld ..	.. 103, Clive Street	ditto
	Dod, T F ..	.. Assistant, Shaw Wallace & Co ..	.. 4, Bankshall Street	ditto

Dodds, G R	Assistant, Mackinnon Mackenzie & Co	16, Strand Road		ditto
Doherty, G P M	Sub-Manager, Lloyds Bank, Ld	101-1, Clive Street		ditto
Doherty, M L	Assistant, J Thomas & Co	8, Mission Row		ditto
Donald, Charles	Branch Manager, Kodak, Ld	17, Park Street		ditto
Douetil, Phillip Victor (Capt)	Secretary, Royal Calcutta Turf Club	11, Russell Street		ditto
Douglas, Thomas	Director, Duncan Brothers & Co, Ld	101, Clive Street		ditto
Dove, George Terence	Assistant, North British & Mercantile Insurance Co, Ld	101-1, Clive Street		ditto
Dow, Albert James	Director, J D Jones & Co, Ld	8, Clive Street		ditto
Downey, C E S	Representative, Crosse & Blackwells, Ld	29, Waterloo Street		ditto
Doyle, David Colquhoun	Assistant, Andrew Yule & Co, Ld	8, Clive Row		ditto
Duff, D Inglis	Assistant, Barry & Co	2, Fairlie Place		ditto
Duncan, C C	Manager, Thacker's Press and Directories, Ld	6, Bentinck Street		ditto
Duncan, Thomas Charles	Partner, F C Pallachi & Co	7, Royal Exchange Place		ditto
Dunlop, J	Superintending Engineer, B I S N Co, Ld	16, Strand Road		ditto
Dunlop, Robert William Barr	Director, Duncan Brothers & Co, Ld	101, Clive Street		ditto
Dunsdon, A C	Deputy Chief Engineer, E I R	E I R House		ditto
Duthie, Donald	Mains Engineer, C E S C, Ld	Victoria House		ditto
Duttson, R D	Assistant, Burn & Co, Ld	12, Mission Row		ditto

No.	Names.	Style or calling.	Residence or place of business.	Relig'on.
	E			
	Eadie, W E ..	.. Senior Accountant, Burmah-Shell Co of India, Ld ..	.. Hongkong House ..	.. Christian
	Eastgate, C C T ..	.. Electrical Engineer, Octavius Steel & Co, Ld ..	.. 14, Old Court House Street	.. ditto
	Eatwell, G H F ..	.. Director, T E Bevan & Co, Ld ..	.. Grosvenor House ..	.. ditto
	Eden, E A ..	.. Managing Director, W Newman & Co, Ld ..	.. 3, Old Court House Street	.. ditto
	Edgley, G H G ..	.. Assistant, Lovelock & Lewes ..	.. 4, Lyons Range ..	.. ditto
	Edmondson, T, FIAA ..	.. Assistant Architect to the Government of Bengal ..	.. Writers' Buildings ..	.. ditto
	Edward, R R ..	.. Director, Roberts McLean & Co, Ld ..	.. 101, Clive Street ..	.. ditto
	Edwards, Leonard Brooke	.. Manager, The Baldwin Locomotive Works ..	.. 5, Dalhousie Square ..	.. ditto
	Edwards, Lionel ..	.. Managing Director, Lionel Edwards, Ld ..	.. D-1, Clive Buildings ..	.. ditto
	Edwards, Bivian Stanley	.. Director, Senda & Co (India), Ld	.. 135, Canning Street ..	.. ditto
	Elcock, James ..	.. General Manager, Planters' Stores & Agency Co, Ld	.. 11, Clive Street ..	.. ditto
	Elder, A G ..	.. Assistant, Jardine Skinner & Co ..	.. 4, Clive Row ..	.. ditto
	Elias, B N ..	.. Resident	.. 2, Albert Road ..	.. Jew
	Elias, I H ..	.. Personal Assistant to Director of Public Health, Bengal	.. Writers' Buildings ..	.. Semitic
	Elias, Joaseph Manasseh	.. Accountant, Arnhold & Co, Ld ..	.. 101, Clive Street ..	.. Jew
	Elias, M ..	.. Partner, M Elias & Co ..	.. 100, Clive Street ..	.. ditto
	Elias, N M ..	.. Partner, M Elias & Co ..	.. 100, Clive Street ..	.. ditto
	Elkan, C V ..	.. Director, Turner Morrison & Co, Ld ..	.. 6, Lyons Range ..	.. Christian
	Elley, Thomas Benson ..	.. Director, Sinclair Murray & Co, Ld ..	.. 6, Royal Exchange Place	.. ditto
	Elliot, Walter Robert ..	.. Assistant, Place, Siddons & Gough ..	.. 6, Lyons Range ..	.. ditto
	Ellis, E ..	.. Sub-Manager, Arnhold & Co ..	.. 101, Clive Street ..	.. ditto

Ellis, E	Proprietor, S Ellis & Co	24-1, Chowringhee	ditto
Ellis, E E	Superintendent, C C M's Office, E I R	E I R House	ditto
Ellis, Jesse	Managing Director, Skoda (India), Ld	8, Royal Exchange Place	ditto
Ellis, J W	Partner, Don Watson & Co	4, Lyons Range	ditto
Ellis, R	Superintendent, Licensed Measurer's Department	2, Clive Street	ditto
Ellis, W S	Acting Chief Engineer, Calcutta Tramways Co, Ld	7, Church Lane	ditto
Ellison, Eric Douglas Vernon	Assistant Controller of Inspection, Indian Stores Department	6, Esplanade, East	ditto
Elton, J F	Partner, Kilburn & Co	4, Fairlie Place	ditto
Emery, Leslie Henry	Merchant	Mercantile Buildings	ditto
Emery, William John Weymss	Assistant Mains Superintendent, C E S C, Ld	Victoria House	ditto
Eustace, Frank Henry	Salesman, W & T Avery, Ld	28-2, Waterloo Street	ditto
Euthymopulo, George	Manager, Ralli Bros, Ld	16, Hare Street	ditto
Evans, Ernest John	Manager, P & M Co (England), Ld	7, Council House Street	ditto
Evans, James Amphlett Edwardes	Assistant, Hoare Miller & Co, Ld	5, Fairlie Place	ditto
Evans, James David	Manager (Turnery), Army & Navy Stores, Ld	41, Chowringhee	ditto
Evans, John Philip	Assistant, Anderson Wright & Co	22, Strand Road	ditto
Evans, Reginald Ewart	Manager, Samuel, Fitze & Co, Ld	26, Chowringhee	ditto
Evans, W	Proprietor, W Evans & Co	3, Mangoe Lane	ditto
Evans, William Robert	Manager, W & T Avery, Ld	28-2, Waterloo Street	ditto
Evans, W T	Manager, Wellington & Ward, Ld	Tower House, Chowringhee Square	ditto
Ewart, George	General Manager, T E Thomson & Co, Ld	9, Esplanade, East	ditto
Ezra, Edward S	Partner, Edward & Co	Norton Buildings	Jew

No.	Names.	Style or calling.	Residence or palce of business.	Religion.
	F			
	Fairbairn, Douglas Chisholm ..	Assistant Secretary, Bengal Chamber of Commerce ..	2, Clive Street	Christian
	Fairbrother, Valentine	Assistant, Spencer & Co, Ld ..	.. 32, Chowringhee	ditto
	Farquharson, John Robert ..	General Manager, Burmah-Shell Co of India, Ld ..	.. Hongkong House	ditto
	Farrell, Dennis Joseph	Assistant, Beg Dunlop & Co, Ld ..	.. 2 Hare Street	ditto
	Faulkner, George M	Acting Manager, Steiners, Ld ..	.. A-3, Clive Buildings	ditto
	Fawkes, Percival Owen	Managing Director, Ranken & Co, Ld ..	.. 4, Old Court House Street ..	ditto
	Fergie, K R	Accountant, George Henderson & Co, Ld ..	.. 101-1, Clive Street	ditto
	Ferguson, R	Manager, Scottish Union and National Insurance Co, Ld	.. 6, Lyons Range	ditto
	Ferrier, Charles Duncan, MA, B Sc ..	Assistant, Gillanders Arbuthnot & Co ..	.. 8, Clive Street	ditto
	Fettes, Kenneth Richard ..	Assistant, Gillanders Arbuthnot & Co ..	.. 8, Clive Street	ditto
	Field, Osmond James	Inspector, Smoke Nuisances Commission, Bengal ..	.. 3, Charnok Place	ditto
	Fielder, C J	Assistant, Turner Morrison & Co, Ld ..	.. 6, Lyons Range	ditto
	Findlay, James	Assistant, Bird & Co ..	.. 1-1, Clive Street	ditto
	Findlay, W H	Assistant Accountant, P & O Banking Corporation, Ld	.. 1, Fairlie Place	ditto
	Finlator, Thomas Fairburn ..	Manager, Keymer, Bagshawe & Co, Ld ..	.. 4, Lyons Range	ditto
	Finlayson, A, B Sc	Executive Engineer, Dredger Division ..	.. 3, Charnock Place ..	ditto
	Fisher, A V	Partner, Lardner, North & Co ..	.. 8, Strand Road	ditto

Fisher, J P	..	Waterproofing Engineer, John Fisher & Co	..	13-5, Clive Buildings .. .. ditto
Fisher, Noel Lincoln	..	Agent, Thos Cook & Son, Ld	..	4, Dalhousie Square .. ditto
Fisk, Frederick William	..	Partner, Walter Bushnell, Ld	..	21, Old Court House Street .. ditto
Flangini, Panaghi Nicholas	..	Assistant, Ralli Bros, Ld	..	16, Hare Street .. .. ditto
Fleming, H C	..	Assistant, Turner Morrison & Co, Ld	..	6, Lyons Range .. .. ditto
Fletcher, T	..	Assistant, Imperial Chemical Industries (India), Ld	..	18, Strand Road .. .. ditto
Fletton, Alfred George	..	Accountant, Bengal Telephone Corporation, Ld	..	8, Hare Street .. .. ditto
Forbes,-Cyid Eric St John	..	Auditor, Chief Auditors' Office, E I R	..	E I R House .. .. ditto
Ford, A H	..	Assistant, Mackinnon Mackenzie & Co	..	16, Strand Road .. .. ditto
Foster, J C	..	Constituted Attorney, Turner, Morrison & Co, Ld	..	6, Lyons Range .. .. ditto
Foster, J G (Capt.)	..	Assistant, Kilburn & Co	..	4, Fairlie Place .. .. ditto
Foulis, James Craig	..	Chief Electrical Engineer, F & C Oslar, Ld	..	12, Old Court House Street .. ditto
Fox, H L	..	Assistant, Mackinnon Mackenzie & Co	..	16, Strand Road .. .. ditto
Fox, Herbert McDermott	..	Assistant, Andrew Yule & Co, Ld	..	8, Clive Row .. .. ditto
Francis, Dudley Wadlow	..	Assistant, London & Lancashire Insurance Co, Ld	..	2, Fairlie Place .. .. ditto

Names.	Style or calling.	Residence or place of business.	Religion.
Franks, Horace George ..	.. Managing Editor " Star of India " ..	.. 9, Dharamtala Street ..	.. Christian
Fraser, Archibald ..	.. Partner, Blacker & Co ..	.. 2, Clive Street ..	.. ditto
Fraser, J N ..	.. Assistant, Octavius Steel & Co, Ld ..	.. 14, Old Court House Street ..	ditto
Freeman, Charles Frederic	.. Assistant, Andrew Yule & Co, Ld ..	.. 8, Clive Row ..	.. ditto
Fricker, Ernest Stanley Gibbs	.. Accountant, Planters' Stores & Agency Co, Ld ..	.. 11, Clive Street ..	.. ditto
Fritchley, George Bowen	.. Architect, Martin & Co ..	.. 12, Mission Row ..	.. ditto
Fritchley, Horace Christopher	.. Principal, Calcutta Boys School	.. 72, Corporation Street ..	.. ditto
Fuller, R U ..	.. Partner, Price, Waterhouse, Peat & Co ..	.. B4, Clive Buildings ..	.. ditto
Fyfe, A G ..	.. Assistant, Price Waterhouse, Peat & Co ..	.. B-4, Clive Buildings ..	.. ditto
Fyffe, F C ..	.. Assistant, Shaw, Wallace & Co, ..	.. 4, Bankshall Street ..	.. ditto
G			
Gahan, Patrick Joseph ..	.. Controller of Purchase, Indian Stores Department ..	.. 6, Esplanade, East ..	.. Christian
Gallie, James ..	.. Assistant, Duncan Brothers & Co, Ld ..	.. 101, Clive Street ..	.. ditto
Galloway, James E ..	.. Assistant, Andrew Yule & Co, Ld ..	.. 8, Clive Row ..	.. ditto
Gardner, Chas ..	.. Assistant Manager, Calcutta General Printing Co, Ld	300, Bowbazar Street ..	.. ditto

Gardner, G J	..	Assistant, Kettlewell Bullen & Co, Ld	..	21, Strand Road	.. .. ditto
Gardner, W G	..	Assistant, Asbestos Cement, Ld	..	135, Canning Street	.. .. ditto
Garland, A J	..	Agent, Jute Industries, Ld	..	1A, Hare Street	.. .. ditto
Garrie, G M	..	Assistant, Thomas Duff & Co, Ld	..	3, Clive Row	.. .. ditto
Gaynor, Harlod Francis	..	Assistant, Bird & Co	..	1-1, Clive Street	.. .. ditto
Gempell, G W	..	Director, Balmer, Lawrie & Co, Ld	..	103, Clive Street	.. .. ditto
Gibb, David Valentine	..	Director, Andrew Yule & Co, Ld	..	8, Clive Row	.. .. ditto
Gibson, F J B (Capt.)	..	Assistant Conservator, Port Commissioners' Office	..	Strand Road	.. .. ditto
Gibson, Frederick Alex Clemons, MA (Oxon)		Assistant, Commercial Union Assurance Co, Ld	..	32, Dalhousie Square	.. .. ditto
Gibson, J C	..	Deputy Chief Mechanical Engineer, E I R	..	E I R House	.. .. ditto
Gibson, John Mckenzie	..	Sub-Accountant, Eastern Bank, Ld	..	9, Clive Street	.. .. ditto
Gill, H C F	..	Assistant, Lovelock & Lewes	..	4, Lyons Range	.. .. ditto
Gill, Henry Hugh Beckwith		Manager, Standard Telephone & Cables, Ld	..	C-2, Clive Buildings	.. .. ditto
Gillespie, A T	..	Merchant	..	13, Government Place, East	.. ditto
Ginivan, Edward	..	Manager, Carr & Co, Ld	..	Norton Buildings	.. .. ditto
Girling, Eustace George, B SC		Engineer, Martin & Co	..	12, Mission Row	.. .. ditto
Gladstone, Thomas Steuart		Manager, Gillanders, Arbuthnot & Co	..	8, Clive Street	.. .. ditto
Glenn, Eric Birch	..	Manager, Boots Pure Drug Co, Ld	..	Mercantile Buildings	.. .. ditto

No.	Names.	Style or calling.	Residence or place of business.	Religion.
	Glennie, J D F ..	.. Director, British Tabulating Machine Co, Ld ..	.. 4, Dalhousie Square, East ..	Christian
	Gloag, Alstair Francis ..	.. Manager, A & J Main & Co, Ld ..	.. 10, Clive Street	ditto
	Glover, R P ..	.. Assistant, Turner Morrison & Co, Ld ..	.. 6, Lyons Range	ditto
	Goddard, W D ..	.. Director, Ingersoll Rand (India) Ld	.. 15, Clive Street	ditto
	Godfrey, Walter, BA ..	.. Assistant to H M's Senior Trade Commissioner in India ..	4, Fairlie Place	ditto
	Godley, T ..	.. Executive Engineer, Calcutta Tramways Co, Ld ..	.. 7, Church Lane	ditto
	Golledge, Stephen Edward	.. Assistant, A & J Main & Co, Ld ..	.. 10, Clive Street	ditto
	Gooding, O ..	.. Manager, Hall & Anderson, Ld ..	.. 31, Chowringhee	ditto
	Gordon, William Law ..	.. Assistant, Macneill & Co ..	.. 2, Fairlie Place	ditto
	Goss, Ernest Cyril ..	.. Assistant F W Heilgers & Co ..	.. 1-1, Clive Street	ditto
	Gosset, H H E (Lt-Col.) RE	.. Deputy Chief Engineer, North, E B R ..	.. 3, Kaylaghat Street	ditto
	Gould, F ..	.. Manager (Salt), Grahams Trading Co (India), Ld ..	.. 6, Lyons Range	ditto
	Goward, Earnest Evelyn	.. Assistant, Imperial Chemical Industries (India), Ld ..	.. 18, Strand Road	ditto
	Gracie, Frank ..	.. Director, Imperial Tobacco Co of India, Ld ..	.. 37, Chowringhee	ditto
	Graham, John St Aidan Irvine	.. Manager, United Steel Co (India), Ld ..	.. 4, Lyons Range	ditto
	Graham, John Stevenson	.. Director, Duncan Brothers & Co, Ld ..	.. 101, Clive Street	ditto
	Grant, Francis Herbert ..	.. Head Draftsman, Survey of India (Drawing) ..	.. 13, Wood Street	ditto
	Grant, Robert ..	.. Chief Inspector and Secretary, Bengal Smoke Nuisances Commission	3, Charnock Place	ditto

Graves, H	Sub-Manager, Mercantile Bank of India, Ld	8, Clive Street	ditto	
Gray, Donald S	General Manager for India, Standard Vacuum Oil Co	6, Church Lane	ditto	
Gray, Marcus Dods, MA	Professor, Scottish Church College	4, Cornwallis Square	ditto	
Gray, Stewart	Partner, Reed Ward & Co	2, Royal Exchange Place	ditto	
Greaves, Phillip	Artist, *Statesman*, Ld	Statesman House	ditto	
Green, H	Assistant to District Manager, Lloyds Bank, Ld	101-1, Clive Street	ditto	
Greene, Albert George	Assistant Engineer, Bengal Telephone Corporation, Ld	8, Hare Street	ditto	
Greig, Hamish Adams, C A	Director, Standard Literature Co, Ld	13-1, Old Court House Street	ditto	
Gresham, S R	Director, Heatly & Gresham, Ld	6, Waterloo Street	ditto	
Grewar, A K	Assistant, Thomas Duff & Co, Ld	3, Clive Row	ditto	
Grice, W H	Manager, Imperial Chemical Industries (India), Ld	18, Strand Road	ditto	
Griffin-Chave, Frederick Thomas	General Manager, F & C Osler, Ld	12, Old Court House Street	ditto	
Grimsdick, E P, AMIE	Managing Director and General Manager, Associated Electrical Industries (India), Ld	8, Clive Street	ditto	
Grimshaw, Arthur	Works Manager, Kodak, Ld	17, Park Street	ditto	
Grove, Eric Harry	Assistant, Gillanders Arbuthnot & Co	8, Clive Street	ditto	
Gubbay, A R	Proprietor, D A Gubbay & Co	6, Pollock Street	Jew	
Gubbay, Ezekiel Joseph	Partner, H D Cartwright & Co	8, Clive Street	ditto	
Gumbrill, A	Publicity Officer, C C M's Office, E I R	E I R House	Christian	
Gunn, T B	Assistant, Imperial Chemical Industries (India), Ld	18, Strand Road	ditto	
Guthrie, Frederick Charles	Manager, James Finlay & Co, Ld	1, Clive Street	ditto	
Guthrie, James	Assistant Commercial Manager, C E S C, Ld	Victoria House	ditto	
Guthrie, J H	Manager, Babcock & Wilcox, Ld	4, Bankshall Street	ditto	
Gye, Norman Dato	Partner, W S Cresswell & Co	3, Clive Street	ditto	

No.	Names.	Style or calling.	Residence or place of business.	Religion.
	H			
	Haddow, R R ..	.. Partner, Mackinnon Mackenzie & Co ..	.. 16, Strand Road	Christian
	Haigh, Geo ..	.. General Manager, A K Dn, Remington Rand Inc ..	.. 3, Council House Street	ditto
	Hall, Cecil Byng ..	.. Partner, Normans Ross & Co ..	.. 3, Clive Street	ditto
	Hamilton, Bertram ..	.. Assistant Audit Officer, E B R ..	.. 3, Kaylaghat Street	ditto
	Hamilton, Kenneth Allen	.. Branch Manager, Army & Navy Co-operative Society, Ld ..	41, Chowringhee	ditto
	Hamlyn, J H ..	.. Managing Director, J. B. Norton & Sons, Ld ..	.. Norton Buildings	ditto
	Hammond, Keith ..	.. Assistant, Andrew Yule & Co, Ld ..	.. 8, Clive Row	ditto
	Harding, H R, AMIE ..	.. Assistant, Associated Electrical Industries (India), Ld	.. 8, Clive Street	ditto
	Hards, Richard Leo ..	.. Engineer, Begg Dunlop & Co, Ld ..	.. 2, Hare Street	ditto
	Hare, Hugh Kenneth Christian	.. Manager, Ralli Bros, Ld ..	.. 16, Hare Street	ditto
	Harley, A H, MA ..	.. Principal, Islamia College ..	.. 8, Wellesley Street	ditto
	Harmer, W T Vizer ..	.. Manager, Bengal Iron Co, Ld ..	.. 4, Lyons Range	ditto
	Harnack, George Henry ..	.. Proprietor, Harnack & Co ..	.. 10, Old Court House Street ..	ditto
	Harper, J B ..	.. Managing Director, Ivan Jones, Ld ..	.. 8, Dalhousie Square, East ..	ditto
	Harris, E F (Capt.) ..	.. Cargo Superintendent, Mackinnon Mackenzie & Co ..	.. 8, Strand Road	ditto
	Harris, L E ..	.. Manager, Sulzer Bros ..	.. 11, Clive Street	ditto
	Harris, Maurice George Robert	.. Director, Martin and Harris, Ld ..	.. 17, Prinsep Street	ditto
	Harris, N D, MA ..	.. Chief Accountant, Imperial Chemical Industries (India), Ld	.. 18, Strand Road	ditto
	Harris, William D ..	.. Sub-Accountant, National City Bank of New York ..	.. 4, Clive Street	ditto
	Harrison, Frank Seymour	.. Manager, South British Insurance Co, Ld ..	.. 5, Clive Street	ditto

Harrison, S J	Construction Engineer, C E S C, Ld	Victoria House		ditto
Hart, G W R	Assistant, Roberts McLean & Co, Ld	101, Clive Street		ditto
Harvey, S	Secretary, Roberts McLean & Co, Ld	101, Clive Street		ditto
Hatfield, C R	Chief Accountant, Shaw Wallace & Co	4, Bankshall Street		ditto
Hawes, G L	Manager, Norwich Union Fire Insurance Society, Ld	8, Old Court House Street		ditto
Hawkins, A G	Managing Director, General Electric Co (India), Ld	Magnet House, Central Avenue		ditto
Haywood, Rogers	Partner, Piggott, Chapman & Co	6, Lyons Range		ditto
Heaney, George Frederick (Capt.), RE	Officer-in-charge (Photo-Litho), Survey of India	14, Wood Street		ditto
Heape, Charles Herbert	Partner, Place, Siddons & Gough	6, Lyons Range		ditto
Hearn, A	Chief Engineer, Calcutta Tramways Co, Ld	7, Church Lane		ditto
Heath, Roland Harding	Secretary, J B Norton & Sons, Ld	Norton Buildings		ditto
Heatly, J F	Director, Guest, Keen, Williams, Ld	7, Council House Street		ditto
Heesom, Brian Gilford	Accountant, Begg Dunlop & Co, Ld	2, Hare Street		ditto
Hele, Harry Eric	Manager, H J Foster & Co, Ld	7, Hare Street		ditto
Hemmin, Sydney Walter	Director & Secretary, *Statesman*, Ld	Statesman House		ditto
Henderson, Douglas Hedley Phelips	Mains Engineer, C E S C, Ld	Victoria House		ditto
Henderson, D S	Managing Director, D L Millar & Co, Ld	28, Dalhousie Square, West		ditto
Henderson, G	Sr Assistant, Shaw Wallace & Co	4, Bankshall Street		ditto
Henderson, T	Director, Mackintosh, Burn, Ld	8, Clive Street		ditto
Henderson, W	Resident Marine Underwriter, London and Lancashire Co, Ld	2, Fairlie Place		ditto

No.	Names.	Style or calling.	Residence or place of business.	Religion.
	Henderson, W C	Engineer, Burmah-Shell Co of India, Ld ..	.. Hongkong House	Christian
	Hendry, Charles Arthur	Engineer, Martin & Co ..	.. 12, Mission Row	ditto
	Hendry, D, MC, BSc	Director, Imperial Chemical Industries (India), Ld ..	.. 18, Strand Road	ditto
	Herd, William Henderson ..	Electrical Engineer, T E Thomson & Co, Ld ..	.. 9, Esplanade, East	ditto
	Herridge, W J	Manager, Calcutta Claims Bureau ..	.. 26, Dalhousie Square	ditto
	Hewett, Harry Meiklan Prescott ..	Assistant, Andrew Yule & Co, Ld ..	.. 8, Clive Row	ditto
	Hewison, A	Superintending Engineer, I G N & Ry Co, Ld ..	.. 4, Fairlie Place	ditto
	Higgins, John	Stipendiary Steward, Royal Calcutta Turf Club ..	.. 11, Russell Street	ditto
	Hines, Thomas Austin	Manager, American Express Co, Inc ..	.. 14, Government Place, East ..	ditto
	Hingston, Cecil Victor	Chief Valuer, Calcutta Improvement Trust ..	.. 5, Clive Street	ditto
	Hinton, Cyril Herbert, BSc ..	Assistant, Martin & Co ..	.. 12, Mission Row	ditto
	Hocken, Garth	Assistant, Bird & Co ..	.. 1-1, Clive Street	ditto
	Hodge, James	Merchant ..	.. (Suite No 10) 8, Esplanade East ..	ditto
	Hodgson, John B	Director, Lionel Edwards, Ld ..	.. D-1, Clive Buildings	ditto
	Hoerder, Paul Eugine Robert ..	Assistant, Bird & Co ..	.. 1-1, Clive Street	ditto
	Hogarth, Robert Robison ..	Assistant, James Finlay & Co, Ld ..	.. 1, Clive Street	ditto
	Hogben, Ernest James, MA (Oxon) ..	Principal, Calcutta Technical School ..	.. 110, Surendra Nath Banerji Street ..	ditto
	Hoggan, T	Engineer, Macintosh Burn, Ld ..	.. 8, Clive Street	ditto
	Hogshaw, F H	Superintending Engineer, Central Circle, PWD ..	.. Writers' Buildings	ditto
	Hollis, F S	Assistant, Jardine Skinner & Co ..	.. 4, Clive Row	ditto
	Hollis, H R	Salesman, W Leslie & Co ..	.. 19, Chowringhee	ditto
	Holme, James William, MA ..	Principal, La Martinière ..	.. 11, Loudon Street	ditto

Holmes, C E	Assistant Stores Officer, E B R	3, Kaylaghat Street	ditto
Holmes, Charles H	Managing Director, Holmes, Wilson & Co, Ld	Norton Buildings	ditto
Holt, Alfred Rayner	Resident Manager, Royal Exchange Assurance	1 & 2, Old Court House Corner	ditto
Holt, J W C	Secretary to Agent, E I R	E I R House	ditto
Homan, F T	Agent, C E S C, Ld	Victoria House	ditto
Hood, Fredrick William Edward	Assistant, Andrew, Yule & Co, Ld	8, Clive Row	ditto
Hooper, C T G	Managing Director, Air Conditioning Corporation, Ld	5, Dalhousie Square	ditto
Horn, D J	Sales Manager, General Electric Co, (India), Ld	Magnet House, Central Avenue	ditto
Horsbrugh, James Makjéll	Assistant, Andrew, Yule & Co, Ld	8, Clive Row	ditto
Horton, G S	Partner, J Thomas & Co	8, Mission Row	ditto
Hosie, Alexander Lindsay	Partner, Ziffo & Co	5, Garstins Place	ditto
Howe, H	Bridge Engineer, C E's Office, E I R	E I R House	ditto
Howell, Percy Poynton	Manager, Eagle Star & British Dominion Insurance Co, Ld	21, Strand Road	ditto
Howie, Bruce	Manager, Fraser & Co, Ld	4, Fairlie Place	ditto
Hudson, H H (Lt-Col)	Deputy Traffic Manager, Port Commissioners' Office	Strand Road	ditto
Huggett, C G	Assistant, Hall & Anderson, Ld	31, Chowringhee	ditto
Hughes, J R	Manager, Britannia Biscuit Co, Ld	10, Harrington Mansions	ditto

Names	Style or calling.	Residence or place of business.	Religion.
Hughes, M A	Director, Turner, Morrison & Co, Ld	6, Lyons Range	Christian
Hull, F J	Supervising Director, Remington Rand Inc	3, Council House Street ..	ditto
Hullock, I R	Proprietor, Cardboard Materials Co	1, British Indian Street	ditto
Hulme, W H	Assistant, Lovelock & Lewes	4, Lyons Range	ditto
Hume, T	Branch Manager, Babcock & Wilcox, Ld	4, Bankshall Street	ditto
Humphreys, H L	Actuary, National Insurance Co, Ld	7, Council House Street	ditto
Humphreys, Llewelyn Errington ..	Representative, Ralph Paxton	10, Lall Bazar	ditto
Hunt, Natheniel Harvey	Assistant, Martin & Co	12, Mission Row	ditto
Hunter, A T	Assistant Accountant, P & O Banking Corporation, Ld ..	1, Fairlie Place	ditto
Hunter, Harry Claude Arnele ..	Manager and Underwriter, Commercial Union Assurance Co, Ld	32, Dalhousie Square	ditto
Hunter, R F	Director, Imperial Chemical Industries (India), Ld	18, Strand Road	ditto
Hunter, William	Manager, Gillanders, Arbuthnot & Co	8, Clive Street	ditto
Hutchinson, William	Partner, Ford, Rhodes, Thornton & Co	Tower House, Chowringhee Square ..	ditto
Hutteroth, William Graham ..	Director, Morrison & Cottle, Ld	8, Esplanade, East	ditto
Hutton-Williams, Brent Elworthy ..	Manager, D J Keymer & Co, Ld	4, Lyons Range	ditto
Hybart, I B	Accountant, Chartered Bank of India, Australia & China ..	1-1, Clive Street	ditto
Hyland, Frank George	Engineer, Bengal Telephone Corporation, Ld	8, Hare Street	ditto

Imrie, Kenneth Erskine	Manager, Nestle & Anglo-Swiss Condensed Milk (Export) Co, Ld	9-A, Clive Street		Christian
Inglis, Fredrick	Assistant, Bird & Co	1-1, Clive Street		ditto
Inglis, James Alexander	Manager, James, Finlay & Co, Ld	1, Clive Street		ditto
Innes, Charles Alexander	Assistant, Andrew, Yule & Co, Ld	8, Clive Row		ditto
Irvine, William Smith	Assistant, Mackenzie, Lyall & Co	5, Mission Row		ditto
Irwin, J R	Accountant, W Leslie & Co	19, Chowringhee		ditto
Ives, John William Ernest	Director, H L Rochat & Co (Calcutta), Ld	54, Ezra Street		ditto
Izat, Alexander	Assistant, Allahabad Bank, Ld	6, Royal Exchange Place		ditto
J				
Jack, A	Assistant, Turner, Morrison & Co, Ld	6, Lyons Range		Christian
Jackson, Frank Nicholson	Traffic Manager, Imperial Tobacco Co of India, Ld	37, Chowringhee		ditto
Jackson, H L	Resident Secretary, London and Lancashire Insurance Co, Ld	2, Fairlie Place		ditto
Jackson, J W	Assistant, Burn & Co, Ld	12, Mission Row		ditto
Jackson, P S	Chief Engineer, G E C (India), Ld	Magnet House, Chittaranjan (South).	Avenue	ditto
Jamison, R J	Resident Engineer, Davidson & Co, Ld	11, Clive Street		ditto
Jardine, A, D sc	Director, Jessop & Co, Ld	93, Clive Street		ditto
Jardine, James Moyers	Partner, Jardine, Menzies & Co	14, Hare Street		ditto
Jemmett, Charles Wilmot	Director, Imperial Tobacco Co of India, Ld	37, Chowringhee		ditto

No.	Names.	Style or calling.	Residence or place of business.	Religion.
	Jenner, Charles Herbet	Assistant, Bird & Co	1-1, Clive Street	Christian
	James, R H	Assistant Traffic Superintendent, E B R	3, Kaylaghat Street	ditto
	Jepson, Richard Ainslie	Secretary, Automobile Association, Bengal	40, Chowringhee	ditto
	Jonah, Isaac	Assistant, Arnhold & Co, Ld	100, Clive Street	Jew
	Johnson, A E	Assistant, Hall & Anderson, Ld	31, Chowringhee	Christian
	Johnson, Arthur	Engineer, Bengal Telephone Corporation, Ld	8, Hare Street	ditto
	Johnson, Charles Edgar	Manager, W H Harton & Co, Ld	5, Clive Ghat Street	ditto
	Johnson, C J	Superintendent, Central Registry, E I R	E I R House	ditto
	Johnson, Harry Howlett	Assistant, South British Insurance Co, Ld	5, Clive Street	ditto
	Johnson, J T	Superintendent, Government House Gardens, Bengal	5-1, Wellesley Place	ditto
	Johnston, Arthur Stanley	District Manager, Commercial Credit Corporation, Ld	20, Park Street	ditto
	Johnston, Gavin Smith	Broker, Place, Siddons & Gough	6, Lyons Range	ditto
	Johnston, John Kidd	Assistant, Macneill & Co	2, Fairlie Place	ditto
	Johnston, Robert Richard, B.LITT.	Manager, Dodge & Seymore, Ld	Tower House, Chowringhee Square	ditto
	Joliffe, Alexander	Assistant, Macneill & Co	2, Fairlie Place	ditto
	Jones, E E	Bridge Engineer, E B R	3, Kaylaghat Street	ditto

Jones, James ..	.. Manager, James, Finlay & Co, Ld ..	.. 1, Clive Street ..	.. ditto
Joscelyne, Harold Avery	.. Dy Chief Engineer (South) E B R ..	.. 3, Kaylaghat Street ..	.. ditto
Juda, Ezekiel ..	.. Accountant, David Sassoon & Co, Ld ..	.. 4, Lyons Range ..	.. Jew
Judson, Francis Carter ..	.. Acting Manager, Butterworth & Co (India), Ld ..	.. 6, Hastings Street ..	.. Christian

K

Kay, James Reid ..	.. Manager, James, Finlay & Co, Ld ..	.. 1, Clive Street ..	.. Christian
Kay, Thomas Albert ..	.. Assistant, Birkmyre Bros ..	.. 6, Clive Row ..	.. ditto
Keddie, Charles MacKay	.. Assistant, Ralli Bros, Ld	.. 16, Hare Street ..	.. ditto
Keillar, John Ridley ..	.. Manager, Symonds & Co	.. 11, Clive Street ..	.. ditto
Kelley, J H ..	.. Engineer, *Statesman*, Ld ..	.. Statesman House ..	.. ditto
Kellner, C V R ..	.. Superintendent, I G N Ry Co, Ld ..	.. Nimtalla Ghat ..	.. ditto
Kells, George Edward ..	.. Mains Engineer, C E S C, Ld ..	.. Victoria House ..	.. ditto
Kelly, Allan Ralph ..	.. Assistant, Bird & Co ..	.. 1-1, Clive Street ..	.. ditto
Kelly, H C ..	.. Director, C Lazarus & Co, Ld ..	.. 18, Park Street ..	.. ditto
Kendrick, C ..	.. Assistant, Gladstone Wyllie & Co ..	.. 4, Fairlie Place ..	.. ditto
Kennedy, Norman William	.. Assistant, Birkmyre Bros ..	.. 6, Clive Row ..	.. ditto
Kent, G C H ..	.. Partner, Kilburn & Co ..	.. 4, Fairlie Place ..	.. ditto

No.	Names.	Style or calling.	Residence or place of business.	Religion.
	Ker, John Stanley ..	.. Partner, Place, Siddons & Gough ..	.. 6, Lyons Range	Christian
	Kerr, William ..	.. Accountant, National Bank of India, Ld ..	.. 104, Clive Street	ditto
	Kidd, Frank Carlile ..	.. Assistant, F W Heilgers & Co ..	.. 1-1, Clive Street	ditto
	Kidd, George ..	.. Manager, The Indian School Supply Depot ..	.. Chittaranjan Avenue, South ..	ditto
	Kilsby, W E ..	.. Manager, Calcutta General Printing Co, Ld ..	.. 300, Bowbazar Street	ditto
	King, D ..	.. Assistant, J Thomas & Co ..	.. 8, Mission Row	ditto
	King, Hamilton Marrett ..	.. Assistant, Anderson, Wright & Co ..	.. 22, Strand Road	ditto
	King, M H ..	.. Executive Engineer, Port Commissioners' Office ..	.. Strand Road	ditto
	King, Millar Lord ..	.. Secretary and Director, John King & Co, ..	.. 9, Prince Mansions, Middleton Row..	ditto
	King, S A ..	.. Manager (Produce), Grahams Trading Co (India), Ld	.. 6, Lyons Range	ditto
	King, Tom ..	.. Assistant Manager, Linotype and Machinery, Ld ..	.. 21, Bowbazar Street	ditto
	Kingsome, Charles ..	.. Assistant, Andrew, Yule & Co, Ld ..	.. 8, Clive Row	ditto
	Kinloch, D R ..	.. Agent, Chartered Bank of India, Australia & China	.. 1-1, Clive Street	ditto
	Kinsella, Herbert Joseph	.. Manager, Jost's Engineering Co, Ld ..	.. 9B, Mercantile Buildings ..	ditto
	Knowles, Thos. ..	.. Partner, Don Watson & Co ..	.. 4, Lyons Range	ditto
	Knox, Archbald Septimers	.. Director, Scott & Saxby, Ld ..	.. 19, British Indian Street ..	ditto

Korni, Michael Alexandravitch (Dr.)	Assistant, Bird & Co	..	1-1, Clive Street	..	.. ditto

L

Lacamp, Adrian	Assistant Superintendent, Mathematical Instrument Office, Survey of India.		15, Wood Street	..	.. Christian
Lacey, Patrick	Journalist, *Statesman*, Ld	.. ..	Statesman House	..	.. ditto
Lacy, W C	Director, Bharat Abhyuday Cotton Mills, Ld	.. ..	20, Park Street (Suite 9)	..	ditto
Lagden, R B	Partner, McLeod & Co	.. ..	28, Dalhousie Square	..	.. ditto
Laird, T H	Assistant, McLeod & Co	.. ..	28, Dalhousie Square	..	.. ditto
Laird, William Duncan Shaw ..	Director, R Sim & Co, Ld	.. ..	2, Clive Row	..	.. ditto
Lake, W G	Superintendent, I G N & Ry Co, Ld	.. ..	4, Fairlie Place	..	.. ditto
Lamb, Thomas	Director, Begg, Dunlop & Co, Ld	..	2, Hare Street	..	.. ditto
Lander, George	Partner, Walter, Bushnell, Ld	.. ..	21, Old Court House Street	..	ditto
Lane, Francis John	Assistant Manager, T E Thomson & Co, Ld	.. ..	9, Esplanade, East	..	.. ditto
Lang, John Charles	Local Secretary, North British and Mercantile Insurance Co, Ld		101-1, Clive Street	..	.. ditto
Langham, E A	Manager, Aluminium Manufacturing Co, Ld	.. ..	9, Clive Street	..	.. ditto
Lansdell, A L	Director, C Lazarus & Co	.. ..	27, Galstaun Mansions	..	.. ditto
Latimar, James	Assistant, Macneill & Co	.. ..	2, Fairlie Place	..	.. ditto
Laurie, Joseph Henry	Assistant, Anderson, Wright & Co	.. ..	22, Strand Road	..	.. ditto
Laver, Arthur Victor	Partner, Stewart & Co	.. ..	8, Clive Street	..	.. ditto
Law, Frank .. .	Assistant, F W Heilgers & Co	.. ..	1-1, Clive Street	..	.. ditto

No.	Names.	Style or calling.	Residence or place of business.	Religion.
	Law, Ian McKay ..	.. Director, Moran & Co, Ld ..	.. 4, Lyons Range	Christian
	Lawton, Samuel Peter ..	.. Assistant Manager, F & C Osler, Ld ..	.. 12, Old Court House Street ..	ditto
	Leaber, Chester R ..	.. Manager, National City Bank of New York ..	.. 4, Clive Street	ditto
	Leake, Francis William ..	.. Manager, British Insulated Cables, Ld ..	.. 2, Waterloo Street	ditto
	Leake, W R ..	.. Assistant, Jessop & Co, Ld ..	.. 93, Clive Street	ditto
	Leathem, James Martin ..	.. Manager, Planters' Stores & Agency Co, Ld ..	.. 11, Clive Street	ditto
	Leckie, David John ..	.. Manager, James, Finlay & Co, Ld ..	.. 1, Clive Street	ditto
	LeCocq, Jaffrey Mellish ..	.. Partner, Sinclair & Co ..	.. 5, Commercial Buildings	ditto
	Lee, Clifford Harbour ..	.. Proprietor, C H Lee & Co ..	.. 137, Canning Street	ditto
	Lee-Emery, William Robert	.. Assistant, F. W. Heilgers & Co ..	.. 1-1, Clive Street	ditto
	Lees, F G ..	.. Director, H Hobbs & Co, Ld ..	.. 9, Old Court House Street ..	ditto
	Leeson, George William	.. Partner, Macneill & Co ..	.. 2, Fairlie Place	ditto
	Lee-Ure, John ..	.. General Manager, Roneo, Ld ..	.. 9, Clive Street	ditto
	LeFeavre, C O ..	.. Assistant Executive Engineer, Port Commissioners' Office ..	Strand Road	ditto
	Lefevre, Samuel Bernard	.. Manager, Allahabad Bank, Ld ..	.. 6, Royal Exchange Place ..	ditto
	Leisk, J ..	.. Director, Guest, Keen, Williams, Ld ..	.. 7, Council House Street	ditto
	Leisk, John ..	.. Manager, Macbeth Brothers & Co, Ld ..	.. 6, Church Lane	ditto

Leonard, Walter M, B ME	.. Managing Director, Ingersoll-Rand (India), Ld	..	.. 15, Clive Street	.. .. ditto
Le Roy, H L ..	.. Assistant, Burmah Shell Co of India, Ld	..	.. Hong Kong House	.. .. ditto
Leslie, Mark ..	.. Patrner, W Leslie & Co	..	.. 19, Chowringhee	.. .. ditto
Leslie, William Downie ..	.. Partner, Don Watson & Co	..	.. 4, Lyons Range	.. .. ditto
Le Tourneux, E ..	.. Manager, James, Murray & Co	..	.. 5, Old Court House Street	.. ditto
Levien, J W J ..	.. Assistant, Jardine Skinner & Co	..	.. 4, Clive Row	.. .. ditto
Levy, H C ..	.. Director, T E Bevan & Co, Ld	..	.. Grosvenor House	.. .. ditto
Lewis, S R ..	.. Office Manager, United Artists Corpn. of (New York)		.. Tower House	.. .. ditto
Lewis, W E ..	.. General Sales Manager, Remington Rand Inc	..	.. 3, Council House Street	.. .. ditto
Lewis, W T ..	.. Assistant, Jessop & Co, Ld	..	.. 93, Clive Street	.. .. ditto
Limboussi, George Constantine	.. Assistant, Ralli Bros, Ld	..	.. 16, Hare Street	.. .. ditto
Lindquist, Harry ..	.. Manager, I B P Co, Ld	..	.. 8, Clive Street	.. .. ditto
Little, Frederick Sinister	.. Partner, Blackwood, Blackwood & Co	..	.. 4, Lyons Range	.. .. ditto
Liversedge, Fredrick George, ACA	.. Accountant, Martin & Co	..	.. 12, Mission Row	.. .. ditto
Livingston, Alexander ..	.. Manager, Kalamazoo, Ld	..	.. 4, Fairlie Place	.. .. ditto
Lock, W H (Capt.) ..	.. Partner, Breakwell & Co	..	.. 44, Free School Street	.. .. ditto
Lockhart, A R E ..	.. Assistant, Gladstone, Wyllie & Co	..	.. 4, Fairlie Place	.. .. ditto

No.	Names.	Style or calling.	Residence or place of business.	Religion.
	Logan, Alex	Director, J D Jones & Co, Ld	8, Clive Street	Christian
	Lomax, Charles Edward, MA (OXON) ..	Vice-Principal, La Martiniere	11, Loudon Street	ditto
	Long, F	Manager, G F Playfair & Co	27-7, Waterloo Street	ditto
	Longair, David William	Assistant, Landale & Clark, Ld	11, Clive Street	ditto
	Longbottom, J	Assistant, Balmer, Lawrie & Co, Ld	103, Clive Street	ditto
	Longden, G J M, BA, LLB ..	Secretary, Imperial Chemical Industries (India), Ld ..	18, Strand Road	ditto
	Longland, John Perry	Director and Secretary, Alfred Herbert (India), Ld	13-3, Strand Road	ditto
	Lonie, John	Manager, Ericsson Telephones, Ld	21, Old Court House Street ..	ditto
	Lord, R W	Manager, Golabarry (Jute Pressing) Co, Ld	244, Upper Chitpore Road ..	ditto
	Lothrop, Mark Drew	Auditor, Ludlow Jute Co, Ld	7, Royal Exchange Place ..	ditto
	Lowles, Maurice George Raymond ..	Assistant, Birkmyre Bros	6, Clive Row	ditto
	Luke, H A	Partner, W Haworth & Co	1, Commercial Buildings	ditto
	Luke, Norman R	Partner, James, Luke & Sons	7, Royal Exchange Place ..	ditto
	Lunan, William John	Assistant, Allahabad Bank, Ld	6, Royal Exchange Place ..	ditto
	Luson, H	Engineer, Bengal Telephone Corporation, Ld	8, Hare Street	ditto
	Lutyens, F M B	Director, Geo Henderson & Co, Ld	101-1, Clive Street	ditto
	Lyell, A L	Assistant, Shaw, Wallace & Co	4, Bankshall Street	ditto

Lynch, J P	Manager, Liverpool & London & Globe Insurance Co, Ld	26, Dalhousie Square		ditto
Lyne, Edwin	Assistant, Hoare Miller, & Co, Ld	5, Fairlie Place		ditto
Lyttelton, Stephen Clive	Manager, Gillanders Arbuthnot, & Co	8, Clive Street		ditto

M

MacCrimman, Alexander Gillies	Assistant, Macneill & Co	2, Fairlie Place		Christian
MacDonald, P S	Assistant, Thomas Duff & Co, Ld	3, Clive Row		ditto
MacGillivray, Allistair	Assistant Accountant, National Bank of India, Ld	104, Clive Street		ditto
MacGregor, George Gordon	Assistant, Davenport & Co, Ld	6, Church Lane		ditto
MacGregor, H D	Manager (Insurance), Graham's Trading Co (India), Ld	6, Lyons Range		ditto
MacGregor, J	Managing Director, Octavius Steel & Co, Ld	14, Old Court House Street		ditto
MacGregor, John Cameron	Manager, Jewell Export Filter Co	10, Clive Street		ditto
Mackay, Hugh George Gordon	Assistant, Begg, Dunlop & Co, Ld	2, Hare Street		ditto
MacKenzie, A (Major)	Dy Asstt Controller of Army Factory Accounts	6, Esplanade, East		ditto
MacKenzie, A N	Assistant, Barry & Co	2, Fairlie Place		ditto
Mackenzie, Alexander Neill	Assistant, Begg, Dunlop & Co, Ld	2, Hare Street		ditto
MacKie, Edward Reed	Journalist, *Statesman*, Ld	Statesman House		ditto

No.	Names.	Style or calling.	Residence or place of business.	Religion.
	MacKrell, Gyles	Assistant, Octavius Steel & Co, Ld	14, Old Court House Street ..	Christian
	MacLean, E V	Assistant Commercial Manager, E I R	E I R House	ditto
	Macmillan, Anthony St Claire, BA (CANTAB.)	Assistant, Martin & Co	12, Mission Row	ditto
	Macnab, Archibald Robert ..	Manager, Skefko Ball Bearing Co, Ld	11, Clive Street	ditto
	Macqueen, Harold Sweyer ..	Assistant Accountant, National Bank of India, Ld	104, Clive Street	ditto
	Maggs, M H	Assistant Executive Engineer, Port Commissioners' Office ..	Strand Road	ditto
	Maguire, Colin Arthur	Assistant, British Insulated Cables, Ld	2, Waterloo Street	ditto
	Mair, J. G.	Deputy Chief Accountant, Port Commissioners' Office ..	Strand Road	ditto
	Maitland, Frank	Director, Andrew, Yule & Co, Ld	8, Clive Row	ditto
	Malcolm, Robert Conacher ..	Assistant Superintendent (M I O), Survey of India ..	15, Wood Street	ditto
	Mallett, A B	Partner, Mackinnon, Mackenzie & Co	16, Strand Road	ditto
	Mallock, Brian Esmond, BA ..	Assistant, Gillanders, Arbuthnot & Co	8, Clive Street	ditto
	Malsch, W J	Assistant, Lovelock & Lewes	4, Lyons Range	ditto
	Manasseh, Alexander	Resident	6, Russell Street (Flat No. 3) ..	ditto
	Manasseh, Allen S	Partner, S Manasseh & Sons	D-5, Clive Buildings	ditto
	Manasseh, Aslan	Director, Moran & Co, Ld	4, Lyons Range	ditto
	Marquis, Geoffray Charles ..	Partner, Blacker & Co ..	2, Clive Street	ditto

Marr, D	Assistant, Geo Henderson & Co, Ld	101-1, Clive Street		ditto
Marshall, Edward Hannaford	Partner, Lyall, Marshall & Co	4, Fairlie Place		ditto
Marshall, Henry	Architect	1, Rawdon Street		ditto
Marsland, D B	Accountant, Imperial Chemical Industries (India), Ld	18, Strand Road		ditto
Martin, F G S	Controller of Stores, E I R	E I R House		ditto
Martin, Gerald Ulrick, BA	Chief Clerk, C O P S Office, E I R	E I R House		ditto
Maslem, Sydney John	Assistant, Prudential Assurance Co, Ld	Clive Buildings		ditto
Mason, G A	General Manager, Thomas Duff & Co, Ld	3, Clive Row		ditto
Mason, Noel, MA	Controller of Army Factory Accounts	6, Esplanade, East		ditto
Matthews, Bernard, FRI, BA	Partner, Ballardie, Thompson & Matthews	7, Old Court House Street		ditto
May, Albert J	Manager, Linotype and Machinery, Ld	21, Bowbazar Street		ditto
May, George Egerton	Mains Engineer, C E S C, Ld	Victoria House		ditto
May, Wilfred	Director, Moran & Co, Ld	4, Lyons Range		ditto
Mayes, Henry Douglas	Branch Manager, Marshall Sons & Co (India), Ld	99, Clive Street		ditto
Maystre, George Lowndes	Testing Superintendent, C E S C, Ld	Victoria House		ditto

No.	Names.	Style or calling.	Residence or place of business.	Religion.
	McBride, J B ..	.. Chief Inspector of Factories, Bengal ..	.. 40-1A, Free School Street ..	Christian
	McCallum, W J ..	.. Factory Representative, Albion Motor Works, Ld ..	.. 21, Old Court House Steet (Room No. 11).	ditto
	McCann, John Harrison ..	.. Assistant, Moran & Co, Ld ..	.. 4, Lyons Range	ditto
	McCann, N M ..	.. Partner, Perman & Hynd ..	.. 9, Clive Street	ditto
	McDonald, Hector ..	.. Director, Alfred Herbert (India), Ld ..	.. 13-3, Strand Road	ditto
	McDonald, Thomas ..	.. Manager, Standard Vacuum Oil Co ..	.. 6, Church Lane	ditto
	McDougal, P ..	.. Freight Superintendent, I G N & Ry Co, Ld ..	.. 4, Fairlie Place	ditto
	McEwen, E. J ..	.. Manager, Remington Rand Inc ..	.. 3, Council House Street ..	ditto
	McFarlane, J ..	.. Secretary, Octavius Steel & Co, Ld ..	.. 14, Old Court House Street ..	ditto
	McFarlane, John ..	.. Assistant Manager, Union Insurance Society of Canton, Ld	.. 8, Clive Street	ditto
	McGillivray, D G ..	.. Director, Holmes, Wilson & Co, Ld ..	.. Norton Buildings	ditto
	McGlashan, E G ..	.. Director, Asbestos & Belting Co, Ld ..	.. 2, Clive Ghat Street	ditto
	McGregor, W M ..	.. Controller of Stores, E B R ..	.. 3, Kaylaghat Street	ditto
	McInnes, M C ..	.. P A to Secretary and Treasurer, Imperial Bank of India	.. Strand Road	ditto
	McInnes, William McMillan	.. Deputy Assistant Manager, T E Thomson & Co, Ld ..	.. 9, Esplanade, East	ditto
	McIntosh, Donald John Fisher	.. Assistant, British Insulated Cables Ld ..	.. 2, Waterloo Street	ditto

McIntyre, James ..	.. Assistant Manager, Spencer & Co, Ld ..	.. 32, Chowringhee ..	..	ditto
McIntyre, William ..	.. Assistant, Macneill & Co ..	.. 2, Fairlie Place ..	..	ditto
McKechnie, Duncan ..	.. Assistant Accountant, National Bank of India, Ld ..	.. 104, Clive Street ..	..	ditto
McKerrow, J A ..	.. Partner, Bird & Co ..	.. 1-1, Clive Street ..	..	ditto
McKie, A G ..	.. Superintendent, I G N & Ry Co, Ld ..	.. Armenian Ghat ..	..	ditto
McLaren, Alexander ..	.. Assistant, Duncan Bros & Co, Ld ..	.. 101, Clive Street ..	..	ditto
McLatchie, A L ..	.. Director, Balmer, Lawrie & Co, Ld ..	.. 103, Clive Street ..	..	ditto
McLean, William Gardner	.. Director, Geo Miller & Co, Ld ..	.. 7, Hastings Street ..	..	ditto
McLeod, Robert Harper	.. Assistant Manager, New Zealand Insurance Co, Ld ..	.. 26, Dalhousie Square ..	..	ditto
McMullin, D J ..	.. P A to C O P'S, E I R ..	.. E I R House ..	..	ditto
McPherson, James ..	.. Assistant, Begg Dunlop & Co, Ld ..	.. 2, Hare Street ..	..	ditto
Meadows, George Percy ..	.. Secretary, Royal Insurance Co, Ld ..	.. 26 and 27, Dalhousie Square	..	ditto
Meakins, H W ..	.. Dy Traffic Manager, E B R ..	.. 3, Kaylaghat Street ..	..	ditto
Mealing, Kenneth William	.. Director, Andrew Yule & Co, Ld ..	.. 8, Clive Row ..	..	ditto
Meehan, R L W ..	.. Dy Chief Mechanical Engineer, E I R ..	.. E I R House ..	..	ditto
Mellalieu, John Morton ..	.. Chief Accountant, Marshall Sons & Co (India), Ld ..	.. 99, Clive Street ..	..	ditto
Mellis, A R ..	.. Director, Balmer, Lawrie & Co, Ld ..	.. 103, Clive Street ..	..	ditto
Mellor, Robert Wood ..	.. Assistant, F W Heilgers & Co ..	.. 1-1, Clive Street ..	..	ditto
Melville, Alexander Davie	.. Assistant, Bird & Co ..	.. 1-1, Clive Street ..	..	ditto
Mendieta, Isac Daniel ..	.. Head Assistant, Map Publication Branch, Surveyor General's Office	13, Wood Street ..	..	ditto

No.	Names.	Style or calling.	Residence or place of business.	Religion.
	Menhinick, E N	General Manager, Eastern Federal Union Insurance Co, Ld ..	9, Clive Street	Christian
	Menzies, E F	Assistant, Jardine Skinner & Co	4, Clive Row	ditto
	Menzies, Robert	Partner, Jardine Menzies & Co	14, Hare Street	ditto
	Metaxa, Alexander	Assistant, Ralli Bros, Ld	16, Hare Street ..	ditto
	Metcalfe, T A	Tea Taster, Octavius Steel & Co, Ld	14, Old Court House Street ..	ditto
	Methold, J H	Assistant, J Thomas & Co	8, Mission Row	ditto
	Meudell, Edgar	General Manager and Secretary, A Milton & Co, Ld	156, Dharamtala Street	ditto
	Middleton, Herbert	Chief Accountant, Calcutta Tramways Co, Ld	7, Church Lane	ditto
	Middleton, Percival Harold ..	Assistant, Mackenzie Lyall & Co	5, Mission Row	ditto
	Miles, C W	Assistant, Shaw Wallace & Co	4, Bankshall Street	ditto
	Miles, Phillip Purpoint	Mains Engineer, C E S C, Ld	Victoria House	ditto
	Miles W H	Director, G, Atherton & Co (Eastern) Ld	E-4, Clive Buildings	ditto
	Millar, A	Accdt. Superintendent, Scotish Union and National Insurance Co	6, Lyons Range	ditto
	Millar, G A	Director, Winter Bros	Mercantile Buildings	ditto
	Millar, L G	Accountant, Octavius Steel & Co, Ld	14, Old Court House Street ..	ditto
	Miller, Charles Cecil	Chairman, Hoare Miller & Co, Ld	5, Fairlie Place	ditto
	Miller, John	Director, Moran & Co, Ld	4, Lyons Range	ditto
	Miller, Keith Birnie	Partner, Williamson, Magor & Co	4, Mangoe Lane	ditto
	Miller, Robert	Sub-Manager, National Bank of India, Ld	104, Clive Street	ditto
	Miller, Samuel de Burgh ..	Director, Andrew Yule & Co, Ld	8, Clive Row	ditto
	Miller, William George	Director, Geo Miller & Co, Ld	7, Hastings Street	ditto

Mills, Henry ..	.. Assistant, Hoare Miller & Co, Ld ..	.. 5, Fairlie Place ..	..	ditto
Milne, Eric Oswald ..	.. Partner, Sinclair & Co ..	.. 5, Commercial Buildings ..		ditto
Milne-Robertson, C E L	.. Director, Turner Morrison & Co, Ld ..	.. 6, Lyons Range ..	..	ditto
Milton, Morgan Busson ..	.. Managing Director, A Milton & Co, Ld ..	.. 156, Dharamtala Street ..	..	ditto
Minto, James A ..	.. Assistant, Kilburn & Co ..	.. 4, Fairlie Place ..	..	ditto
Mitchell, David ..	.. Partner, Lovelock & Lewes ..	.. 4, Lyons Range ..	..	ditto
Mitchell, Edgar John ..	.. Director, Harman & Co, Ld ..	.. 11, Government Place ..	..	ditto
Mitchell, Ernest David ..	.. Managing Director, Alfred Herbert (India), Ld ..	.. 13-3, Strand Road ..	..	ditto
Mitchell, Thomas Watson	.. Partner, King Bros ..	.. 102, Clive Street ..	..	ditto
Moon, Geo Crammond ..	.. Director, Sinclair Murray & Co, Ld ..	.. 6, Royal Exchange Place	..	ditto
Moon, Thomas James ..	.. Governing Director, Morrison & Cottle, Ld	.. 8, Esplanade, East ..	..	ditto
Moon, Wilfrid Lacy ..	.. Manager, Wiggins Teape & Alex Pirie (Export), Ld ..	.. 6, Mangoe Lane ..	..	ditto
Moore, William Arthur	.. Director and Editor, *Statesman*, Ld ..	.. Statesman House ..	..	ditto
Mordecai, I E ..	.. Proprietor, David & Son ..	.. 6, Short Street ..	..	Jew
Mordue, Leslie Howard ..	.. Assistant Manager (Litho), Surveyor-General's Office	.. 14, Wood Street ..	..	Christian
Morgan, Frank William ..	.. Manager, Prudential Assurance Co, Ld ..	.. Clive Buildings ..	..	ditto
Morgan, I ..	.. Assistant, Balmer, Lawrie & Co, Ld ..	.. 103, Clive Street ..	..	ditto
Morgan, W ..	.. Assistant, Shaw Wallace & Co ..	.. 4, Bankshall Street ..	..	ditto
Morrison, R M ..	.. Partner, Innes Watson & Co ..	.. 15, Clive Row ..	..	ditto
Morshead, J ..	.. Constituted Attorney, Turner Morrison, & Co, Ld ..	.. 6, Lyons Range ..	..	ditto
Mortlock, J H ..	.. Accountant, P & O Banking Corporation, Ld ..	.. 1, Fairlie Place ..	..	ditto

No.	Names.	Style or calling.	Residence or place of business.	Religion.
	Morton, George Bond	Partner, Bird & Co	1-1, Clive Street	Christian
	Morton, Percy William	Branch Manager, Chloride Electrical Storage Co, Ld ..	4, Lyons Range	ditto
	Moulton, C F	Tea Taster, Octavius Steel & Co, Ld	14, Old Court House Street ..	ditto
	Mousell, L C	Managing Director, Mousell & Co, Ld	Mercantile Buildings	ditto
	Mowat, Arthur, MA	Professor, Scottish Church College	4, Cornwallis Square	ditto
	Muggeridge, Thomas Malcolm ..	Journalist, *Statesman*, Ld	Statesman House	ditto
	Muir, A W	Accountant, Heatly & Gresham, Ld	6, Waterloo Street	ditto
	Muirhead, J W	Partner, Norman Stewart & Co	9, Clive Street	ditto
	Munro, Joseph A	Acting Manager, American Foreign Insurance Association ..	15, Clive Row	ditto
	Murphy, Allan Francis	Extra Assistant Superintendent (Drawing), Survey of India ..	13, Wood Street	ditto
	Murphy, T J	Coal Superintendent, B I S N Co, Ld	8, Strand Road	ditto
	Murray, H L	Assistant, Mackinnon Mackenzie & Co	16, Strand Road	ditto
	Murray, Victor William	Partner, Blacker & Co	2, Clive Street	ditto
	N			
	Naismith, John Campbell Dalrymple	Partner, W S Cresswell & Co	3, Clive Row	Christian
	Namey, J	Superintendent, Government Shipping Office	15-1, Strand Road	ditto
	Nelson, F O Bond, BS	Secretary and Director, Ingersoll-Rand (India), Ld	15, Clive Street	ditto
	Nethersole, John (Major) ..	Clerk of the Course, Royal Calcutta Turf Club	11, Russell Street	ditto
	Newbery, Chas A	Head Master, Armenian College and Philanthropic Academy ..	39, Free School Street	ditto
	Nicholl, C K	Director, Octavius Steel & Co, Ld	14, Old Court House Street ..	ditto

Nicholls, Ernest James ..	.. Partner, Williamson, Magor & Co	..	.. 4, Mangoe Lane	.. .. ditto
Nicolson, K J ..	.. Partner, Gladstone, Wyllie & Co	..	.. 4, Fairlie Place	.. .. ditto
Nimmo, Thomas Bryce ..	.. Director, Duncan Brothers & Co, Ld	..	.. 101, Clive Street	.. .. ditto
Niven, J C ..	.. Director, D Millar & Co, Ld	..	.. 28, Dalhousie Square, West	.. ditto
Norcock, C V L (Commdr)	.. Dy Conservator, Port Commissioners' Office	..	.. Strand Road	.. .. ditto
North, B ..	.. Executive Engineer, Western Electrical Division	..	.. Writers' Buildings	.. .. ditto
Norton, H R ..	.. Director, Hall & Anderson, Ld	..	.. 31, Chowringhee	.. .. ditto
Nougerede, F A dela ..	.. District Controller of Stores, E B R	..	.. 3, Kaylaghat Street	.. .. ditto
Nunn, A H ..	.. Executive Engineer, City Dn, P W D	..	.. Writers' Buildings	.. .. ditto

O

O'Connor, H A ..	.. General Manager, United Artists Corporation of (New York)	..	Tower House	.. .. Christian
O' Neill, Allan Graham	.. Assistant Accountant, National Bank of India, Ld	..	.. 104, Clive Street	.. .. ditto
Officer, Adam Smart ..	.. Assistant, F W Heilgers & Co	..	.. 1-1, Clive Street	.. .. ditto
Ogg, J A ..	.. Assistant, Kettlewell, Bullen & Co, Ld	..	.. 21, Strand Road	.. .. ditto
Oliver, Richard John ..	.. Assistant, Martin & Co ..	..	.. 12, Mission Row	.. .. ditto
Ord, Thomas ..	.. Assistant, Macneill & Co ..	..	.. 2, Fairlie Place	.. .. ditto
Ordish, J E ..	.. Director, George Henderson & Co, Ld	..	.. 101-1, Clive Street	.. .. ditto
Ormiston, Jose Forbes ..	.. Assistant, North British & Mercantile Insurance Co, Ld	..	101-1, Clive Street	.. .. ditto
Ormond, John Evelyn ..	.. Partner, Normans Ross & Co ..	..	.. 3, Clive Street	.. .. ditto
Orr, James ..	.. Partner, Lovelock & Lewes ..	..	.. 4, Lyons Range	.. .. ditto
Orrell, A C V ..	.. Manager, Dorman Long & Co, Ld ..	..	.. 8, Clive Stree.	.. .. ditto

No.	Names.	Style or calling.	Residence or place of business.	Religion.
	Ortner, Charles	Assistant, Hamilton & Co, Ld	.. 8, Old Court House Street ...	Christian
	Owen, Clive William	Manager, Britannia Batteries, Ld	.. Bharat Bhavan, Chittaranjan Avenue	ditto
	Owers, Bernard Charles ..	Director, Sinclair, Murray & Co, Ld	.. 6, Royal Exchange Place ..	ditto
	Oxley, Edward	Surveyor, Lloyd's Register of Shipping	.. 29, Dalhousie Square	ditto
	P			
	Padgett, George Arnold	Manager, Blackwood Blackwood & Co	.. 4, Lyons Range	Christian
	Page, W T A	Accountant, Lloyds Bank, Ld	.. 101-1, Clive Street	ditto
	Palmer, H W . ..	Manager, Sales, Lipton, Ld	.. 9, Weston Street	ditto
	Pape, Harold Randleson (Lt-Col) ..	Stipendiary Steward, Royal Calcutta Turf Club ..	.. 11, Russell Street	ditto
	Park, Collin Brown	Assistant, Macneill & Co	.. 2, Fairlie Place	ditto
	Park, Ernest Reginald	General Manager, I R G P & T W Co, Ld ..	.. 7, Old Court House Street ..	ditto
	Parker, T	Director, Imperial Chemical Industries (India), Ld ..	.. 18, Strand Road	ditto
	Parker, W T C	Sub-Manager, Lloyds Bank, Ld	.. 101-1, Clive Street	ditto
	Parkhurst, C A	Manager, Macmillan & Co, Ld	.. 294, Bowbazar Street	ditto
	Parkinson, Ernest	Manager, R B Rodda & Co	.. 2, Wellesley Place	ditto
	Parkinson, J	Chief Engineer, C E S C, Ld	.. Victoria House	ditto
	Paterson, C S	General Secretary, Y M C A	.. 25, Chowringhee	ditto
	Paterson, E A	Assistant, Jardine, Skinner & Co	.. 4, Clive Row	ditto
	Paterson, R W Weir	Partner, Jardine, Skinner & Co	. 4, Clive Row	ditto

Paul, Gerard Henry ..	.. Partner, Piggott, Chapman & Co ..	.. 6, Lyons Range ..	..	ditto
Pawsey, E L (Lt Comdr)	.. 2nd Assistant Conservator, Port Commissioners Office	.. Strand Road ..	..	ditto
Paxton, Ralph Ernest ..	.. Manufacturers Representative	.. 10, Lall Bazar ..	..	ditto
Pearce, W R	.. Accountant, Burmah-Shell Co of India, Ld ..	.. Hongkong House ..	..	ditto
Peddie, K ..	.. Dy. Chief Engineer, E I R ..	.. E I R House ..	..	ditto
Peirce, Harold Robert Gordon	.. Director, Heath & Co (Calcutta), Ld ..	.. 60-C, Chowringhee ..	..	ditto
Penberthy, W F ..	.. Managing Director, D Gestetner (India), Ld ..	.. Grosvenor House ..	..	ditto
Penn, C E ..	.. Assistant, G E C (India), Ld	.. Magnet House, Chittaranjan Avenue (South)		ditto
Penn, Geo. O ..	.. General Manager & Proprietor, Greorge O Penn & Co	.. 22, Chowringhee ..	..	ditto
Pennell, Vincent Edward	.. Assistant, Royal Insurance Co, Ld	.. 26 & 27, Dalhousie Square	..	ditto
Pepper, W R ..	.. Agent, Calcutta Tramways Co, Ld	.. 7, Church Lane ..	..	ditto
Perrin, Frank Hubert ..	.. Manager, New Zealand Insurance Co, Ld ..	.. 26, Dalhousie Square ..	..	ditto
Peskett, Blanchard ..	.. Surveyor to Lloyds Register of Shipping ..	.. 29, Dalhousie Square ..	..	ditto
Peters, E C ..	.. Assistant, Andrew, Yule & Co, Ld ..	.. 8, Clive Row ..	..	ditto
Petrie, F M ..	.. Managing Director, John Paterson & Co, (India) Ld ..	.. 18, Theatre Road ..	..	ditto
Pheasant, J W A ..	.. Electrical Engineer, Octavius Steel & Co, Ld ..	.. 14, Old Court House Street	..	ditto
Philips, G T ..	.. Resident Secretary, Manufacturers Life Insurance Co	.. 27, Dalhousie Square ..	..	ditto
Pierson, H K ..	.. Partner, J Thomas & Co ..	.. 8, Mission Row ..	..	ditto
Pilcher, Frank Hubert ..	.. Accountant, W T Henley's Telegraph Works Co, Ld	.. Old Court House Corner	..	ditto
Pirrie, John Hamilton ..	.. Assistant Accountant, National Bank of India, Ld ..	.. 104, Clive Street ..	..	ditto
Plummer, R W ..	.. Partner, Plummer Bros & Co ..	.. 5 & 6, Fancy Lane ..	..	ditto
Plummer, W R W ..	.. Partner, Plummer Bros & Co ..	.. 5 & 6, Fancy Lane ..	..	ditto

No	Names.	Style or calling.	Residence or place of business.	Religion.
	Polglase, Edward Bazil Julyan ..	Assistant Manager, I B P Co, Ld ..	.. 8, Clive Street ..	.. Christian
	Pollett, John Charles St Clair, VD ..	Extra Assistant Superintendent (Drawing), Survey of India ..	13, Wood Street ..	.. ditto
	Pool, William Stark	Assistant Manager, American Express Co, Inc ..	.. 14, Govt Place, East ..	.. ditto
	Poole, Sidney Albert	Engineer, Alfred Herbert (India), Ld ..	.. 13-3, Strand Road ..	.. ditto
	Porter, S H	Partner, Breakwell & Co ..	.. 44, Free School Street ..	.. ditto
	Potter, George Edward	Accountant, Butterworth & Co (India), Ld ..	.. 6, Hastings Street ..	.. ditto
	Pratt, Charles Harry	Director, Hamilton & Co, Ld ..	.. 8, Old Court House Street	.. ditto
	Pratt, E B	Chairman and Managing Director, Imperial Chemical Industries (India), Ld	18, Strand Road ..	.. ditto
	Pratt, Edwin Basil ..	Assistant Manager, Army & Navy Co-operative Society, Ld ..	41, Chowringhee ..	.. ditto
	Preston, E. Frank ..	Assistant, Balmer, Lawrie & Co, Ld ..	.. 103, Clive Street ..	.. ditto
	Preston, Thomas Henry ..	Accountant, W Newman & Co, Ld ..	.. 3, Old Court House Street	.. ditto
	Price, Cormell Edward William ..	Partner, Normans Ross & Co ..	.. 3, Clive Street ..	.. ditto
	Price, H C	Assistant, Balmer, Lawrie & Co, Ld ..	.. 103, Clive Street ..	.. ditto
	Price, Leslie	Mains Engineer, C E S C, Ld ..	.. Victoria House ..	.. ditto
	Price, Walter Lumsden	Coml Manager, C E S C, Ld ..	.. Victoria House ..	.. ditto
	Price, William Edward ..	Manager, North British & Mercantile Insurance Co, Ld ..	101-1, Clive Street ..	.. ditto
	Prike, Frederic Barton	Partner, R B Rodda & Co ..	.. 2, Wellesley Place ..	.. ditto
	Pringle, I T St C, MA	Dy Agent (Personnel), E B R ..	.. 3, Kaylaghat Street ..	.. ditto
	Pritchard, D	Assistant, Traffic Superintendent, E B R ..	.. 3 Kaylaghat Street ..	.. ditto

Pugh, David Guilliam ..	.. Assistant, Ford, Rhodes, Thornton & Co ..	.. Tower House, Chowringhee Square ..	ditto
Pulley, Albert Edward ..	.. Manager, Worthington-Simpson, Ld ..	.. 10, Clive Street	ditto
Puttock, H L ..	.. Manager, Harrisons & Crosfield, Ld ..	.. 6, Church Lane	ditto

Q

Quirke, John Patrick Francis ..	Broker, Place, Siddons & Gough ..	.. 6, Lyons Range	Christian

R

Radley, T W ..	.. Manager, Radley Publicity Service ..	.. 29, Grosvenor House	Christian
Ramackers, John ..	.. Managing Director, Ramackers & Co, Ld ..	.. 7, Old Court House Street ..	ditto
Ramsay, A R ..	.. Assistant, Shaw, Wallace & Co ..	.. 4, Bankshall Street	ditto
Rataliffe, R H ..	.. Managing, Director, C Lazarus & Co ..	.. 11, Stephen Court	ditto
Read, Frank Joseph ..	.. Director, Hamilton & Co, Ld ..	.. 8, Old Court House Street .	ditto
Read, George Criblo ..	.. Proprietor, George Read & Co ..	.. Avenue House, Chowringhee Square	ditto
Rebello, A R, BA ..	.. Dy Accountant-General (I), Bengal ..	.. Treasury Buildings	ditto
Reece, H S ..	.. Proprietor, G F Playfair & Co ..	.. 27-7, Waterloo Street	ditto
Reed, J C ..	.. Secretary, Associated Electrical Industries (India), Ld	.. 8, Clive Street	ditto
Rees, Edward Owen ..	.. General Manager, Minimax, Ld ..	.. Mercantile Buildings	ditto
Remfry, Douglas H, BE	.. Partner, Remfry & Son ..	.. Stephen House	ditto
Remfry, R ..	.. Partner, Remfry & Son ..	.. Stephen House	ditto
Reneman, N ..	.. Managing Director, Kian Gwan Co (India) Ld ..	.. 4, Lyons Range	ditto
Rennie, John Stevenson ..	.. Director, Cobbold & Co, Ld ..	.. Norton Buildings	ditto
Richardson, Bernard Ian	.. Assistant, Anderson, Wright & Co ..	.. 22, Strand Road	ditto
Richardson, F ..	.. Engineer, Lipton, Ld ..	.. 9, Weston Street	ditto

No.	Names.	Style or calling.	Residence or place of business.	Religion.
	Richardson, John Henry Swain	Managing Director, Andrew, Yule & Co, Ld	8, Clive Row	Christian
	Rigg, V H C	Assistant, Graham Trading Co (India), Ld	6, Lyons Range	ditto
	Rivaz, Charles Warwick	Contract Manager, Bengal Telephone Corporation, Ld	8, Hare Street	ditto
	Roberts, Frederick Graham, ACA	Resident Partner, Spicer, Pegler & Co	5, Fairlie Place	ditto
	Roberts, Horace Robert	Assistant, Royal Exchange Assurance	1 & 2, Old Court House Corner	ditto
	Roberts, Samuel Arthur	Assistant, Bird & Co	1-1, Clive Street	ditto
	Roberts, S F	Managing Director, Roberts, McLean & Co, Ld	101, Clive Street	ditto
	Robertson, A. C	Dy. C. O. P. S. (Power), E I R	E. I. R. House	ditto
	Robertson, Andrew Cathro	Partner, Landale & Morgan	3, Fairlie Place	ditto
	Robertson, G	Accountant, Grindlay & Co, Ld	6, Church Lane	ditto
	Robertson, G S	P A to Chief Engineer, E I R	E I R House	ditto
	Robertson, J D	Assistant, J. Thomas & Co	8, Mission Row	ditto
	Robertson, M	Dy Agent (Genl), E I R	E I R House	ditto
	Robinson, Guy Dudley	Manager (Insurance), Cox & Kings (Agents), Ld	5, Banskhall Street	ditto
	Robinson, J	Director, Maitland Craig. Ld	E-2, Clive Buildings	ditto
	Roddick, C I	Director, Jessop & Co, Ld	93, Clive Street	ditto
	Rogers, Sydney Walter	Assistant Accountant, National Bank of India, Ld	104, Clive Street	ditto
	Rogers, Cornelius William	Assistant Engineer, Bengal Telephone Corporation, Ld	8, Hare Street	ditto
	Rooney, Frederick	Secretary, Bengal Telephone Corporation, Ld	8, Hare Street	ditto
	Rose, George	Inspector of Branches, Allahabad Bank, Ld	6, Royal Exchange Place	ditto

Rose, J N	Agent, Bank of India, Ld	10, Clive Street		ditto
Rose, John Charles	Deputy Chief Commercial Manager, E I R	E I R House		ditto
Ross, E B	Assistant, Turner, Morrison & Co, Ld	6, Lyons Range		ditto
Ross, James William	Managing Director, Walford Transport, Ld	71-73, Park Street		ditto
Ross, S R	Assistant Superintendent, Jetties, Port Commissioners Office	Strand Road		ditto
Rossetti, F F, BSC	Warden and Secretary, Y M C A	42, Surendra Nath Banerjea Street		ditto
Rostron, Arthur Henry Cunliffe	Managing Director, Mutual Indemnity and Finance Corporation (India), Ld	32-1, Dalhousie Square, South		ditto
Rouston, J W	Director, Jessop & Co, Ld	93, Clive Street		ditto
Rowbottom, Wilmot William Boxal	Deputy Chief Inspector of Boilers, Bengal	40-1A, Free School Street		ditto
Rowe, Charles	Mains Engineer, C E S C, Ld	Victoria House		ditto
Rowe, E H	2nd Grade Assistant, Imperial Bank of India	Strand Road		ditto
Rowley, J R	Chief Engineer, Port Commissioners' Office	Strand Road		ditto
Roy, Oswald James, BA	Assistant, Williamson, Magor & Co	4, Mangoe Lane		ditto
Rusbridge, Ernest Charles	Secretary, J C Duffus & Co, Ld	104, Clive Street		ditto
Russell, G D	Assistant, Kilburn & Co	4, Fairlie Place		ditto
Rusell, H W	Constituted Attorney, Standard Vacuum Oil Co	6, Church Lane		ditto
Russell, James Smith Thompson	Assistant, James Finlay & Co, Ld	1, Clive Street		ditto
Ruthven, J L	Partner, Landale & Morgan	3, Fairlie Place		ditto
Ryan, W G	Secretary, Imperial Tobacco Co of India, Ld	37, Chowringhee		ditto
Ryde, W S	Manager, P & O Banking Corporation, Ld	1, Fairlie Place		ditto

No.	Names.	Style or calling	Residence or place of business.	Religion.
	S			
	Salmond, H G ..	.. Dy Agent and Secretary, E B R ..	.. 3, Kaylaghat Street ..	.. Christian
	Salter, L C ..	.. Director, Balmer Lawrie & Co, Ld ..	.. 103, Clive Street ..	.. ditto
	Samuel, H C A ..	.. 2nd Grade Assistant, Imperial Bank of India ..	.. Strand Road ..	.. ditto
	Sandys-Lumsdaine, Colin Cran ..	Assistant, Williamson, Magor & Co ..	.. 4, Mangee Lane ..	.. ditto
	Sassoon, D D ..	.. Manager to David Ezra ..	.. 59, Ezra Street ..	.. Jew
	Sassoon, M A ..	.. Director, M A Sassoon & Sons, Ld ..	.. 21, Old Court House Street	.. ditto
	Sassoon, R M ..	.. Director, M A Sassoon & Sons, Ld ..	.. 21, Old Court House Street	.. ditto
	Saxby, Herbert Baber ..	.. Director, Scott & Saxby, Ld ..	.. 19, British Indian Street	.. Christian
	Sayer, J A ..	.. Electrical Engineer, Octavius Steel & Co, Ld ..	.. 14, Old Court House Street	.. ditto
	Sayers, E H ..	.. Assistant, Carritt Moran & Co ..	.. 9, Mission Row ..	.. ditto
	Scotson, Robert ..	.. Assistant, Anderson, Wright & Co ..	.. 22, Strand Road ..	.. ditto
	Scott, A E ..	.. Assistant, Turner, Morrison & Co, Ld ..	.. 6, Lyons Range ..	.. ditto
	Scott, H P ..	.. Assistant, Shaw, Wallace & Co ..	.. 4, Bankshall Street ..	.. ditto
	Scott, John ..	.. Director, Andrew Yule & Co, Ld ..	.. 8, Clive Row ..	.. ditto
	Scott, J O ..	.. Partner, Perman & Hynd ..	.. 9, Clive Street ..	.. ditto
	Scott, S K ..	.. Assistant, Jardine, Skinner & Co ..	.. 4, Clive Row ..	.. ditto
	Scott, W S ..	.. Manager, Hall & Anderson, Ld ..	.. 31, Chowringhee ..	.. ditto
	Scotter, H G ..	.. Dy Chief Mechanical Engineer, E B R ..	.. 3, Kaylaghat Street ..	.. ditto
	Scrimgeour, Arthur Martin, MA ..	Asstt Manager, H J Foster & Co, Ld ..	.. 7, Hare Street ...	.. ditto

Scroggie, Thomas Willock ..	Manager, Scroggie Brothers ..	..	2, Clive Ghat Street ..	.. ditto
Seeger, F Carl	Manager, The Ocean Accident and Guarantee Corporation, Ld ..		32-1, Dalhousie Square ..	.. ditto
Sealy, Henry Euston	Assistant to District Manager, Lloyds Bank, Ld ..	..	101-1, Clive Street ..	.. ditto
Searle; Stephen ..	Assistant Accountant, National Bank of India, Ld	..	104, Clive Street ..	.. ditto
Sebastian, Anthony deCruz, BA ..	Dy Controller of Army Factory Accounts ..	..	6, Esplanade East ..	.. ditto
Sellars, William Henry Webster ..	Proprietor, W H Sellars (Agency Business) ..	..	14, Hare Street ..	.. ditto
Shailes, H J ..	Assistant Commercial Manager, C C M's Office, E I R	..	E I R House ..	.. ditto
Sharpe, John Charles (Capt) ..	Office Superintendent, Martin & Co ..	..	12, Mission Row ..	.. ditto
Sharpe, Leslie Howard	Manager, Planters' Stores and Agency Co, Ld ..	..	11, Clive Street ..	.. ditto
Shaw, A A ..	Assistant, J Thomas & Co ..	..	8, Mission Row ..	.. ditto
Shaw, W	Secretary, Aluminium Manufacturing Co, Ld ..	..	9, Clive Street ..	.. ditto
Shearer, Allan Struthers	Partner, Mackenzie, Lyall & Co ..	..	5, Mission Row ..	.. ditto
Shelley, Rowland Douglas ..	Resident Engineer, Belliss & Morcom, Ld ..	..	C6, Clive Buildings ..	.. ditto
Shellim, A J	Proprietor, A J Shellim & Co ..	..	22, Canning Street ..	.. ditto
Shepherd, George Alexander Strachan	Assistant, Andrew Yule & Co, Ld ..	..	8, Clive Row ..	.. ditto
Sherman, H M	Partner, W Haworth & Co ..	..	1, Commercial Buildings	.. ditto
Sherman, J R S (Capt) ..	Dy Superintendent, I G N & Ry Co, Ld ..	..	4, Fairlie Place ..	.. ditto
Shircore, M H ..	Assistant, Turner, Morrison & Co, Ld ..	..	6, Lyons Range ..	.. ditto
Shrosbree, A de Bois	Managing Director, Talbot & Co ..	..	Tower House, Chowringhee Square ..	ditto

No.	Names.	Style or calling.	Residence or place of business.	Religion.
	Shuttleworth, Edward Hugh	Partner, Normans Ross & Co	3, Clive Street	Christian
	Siddons, S	Assistant, W H Targett & Co	1, Commercial Buildings	ditto
	Siewart, John George	Assistant, Andrew Yule & Co, Ld	8, Clive Row	ditto
	Sillar, K G	Sales Manager, C E S C, Ld	Victoria House	ditto
	Sla'er, A E	Manager, Herbert Som & Co (Cal.) Ld	Stephen House	ditto
	Slater, Ernest James	Director, Francis, Harrison, Hathaway & Co, Ld	30, Chowringhee	ditto
	Smail, Andrew James	Secretary and Chief Accountant, Calcutta Improvement Trust	5, Clive Street	ditto
	Small, E V	Manager, Associated Electrical Industries (India), Ld	8, Clive Street	ditto
	Smart, John Nelson	Assistant, Landale & Clark, Ld	11, Clive Street	ditto
	Smellie, Charles S	Partner, C T Godfrey & Co	6, Clive Row	ditto
	Smith, Allan	Secretary, Andrew Yule & Co, Ld	8, Clive Row	ditto
	Smith, A J, F R S A	Chief Inspector of Steam Boilers, Bengal	40-1A, Free School Street	ditto
	Smith, Balfour	Partner, Macneill & Co	2, Fairlie Place	ditto
	Smith, D Taylor	Assistant, Andrew Yule & Co, Ld	8, Clive Row	ditto
	Smith, F A	P A to Chief Mechanical Engineer, E B R	3, Kaylaghat Street	ditto
	Smith, H	Secretary, Remfry & Son	Stephen House	ditto
	Smith, Harvey Oswald	Accountant, Eastern Bank, Ld	9, Clive Street	ditto
	Smith, H F	Assistant, Bombay Co, Ld	19, British Indian Street	ditto
	Smith, Ralph Macdonald, B A	Actg Manager in India, Sun Insurance Office Ld	2, Hare Street	ditto

Smith, Stanley Charles	Branch Manager, Employers' Liability Assurance Corporation, Ld	9, Clive Street	ditto
Smith, Udney Vane	Partner, Johnston & Hoffman	10, Chowringhee	ditto
Smythe, Brian Keith Maddison ..	Manager, Thorne's, Ld	13, Ezra Mansions	ditto
Snaith, John Frank	Managing Director, Hamilton & Co, Ld	8, Old Court House Street ..	ditto
Sofaer, Ellis	Assistant, Arnhold & Co, Ld	100, Clive Street	Jew
Solomon, Ernest J	Landholder	16, Theatre Road	ditto
Solomon, H E	Landholder	97, Park Street	ditto
Somerville, William C, BSC, PHD ..	Professor, Scottish Church College ..	4, Cornwallis Square	Christian
Sommerfeld, A	Managing Director, Mousell & Co, Ld	Mercantile Buildings	ditto
Soutar, William John	Managing Agent, Landale & Clark, Ld	11, Clive Street	ditto
Spatz, Robert Felix Barnard ..	Resident Secretary, Liverpool, London & Globe Insurance Co, Ld	26, Dalhousie Square ..	ditto
Speller, John Henry	Engineer, Bengal Telephone Corpn, Ld	8, Hare Street	ditto
Spencer, Albert Pearson	Artist Engraver, Calcutta Mint	47, Strand Road	ditto
Spencer, Mortimer Joseph Campbell	Head Assistant, Bengal Secretariat, Marine Department ..	Writers' Buildings	ditto
Sproat, S M	Director, Ingersoll, Rand (India), Ld	15, Clive Street	ditto
Squarey, D N P	Director, Turner, Morrison & Co, Ld	6, Lyons Range	ditto
Squire, E H H	Manager, Spicers Export, Ld ..	Stephen House	ditto
Squire, L	Partner, A W Figgis & Co	8, Clive Street	ditto
Stanger, D H . ..	Dy Superintendent, P. D O., Imperial Bank of India ..	8, Council House Street	ditto

No.	Names.	Style or calling.	Residence or place of business.	Religion.
	Stanhope, H	Printing Superintendent, E I R	E I R House	Christian
	Stanton, Eric John Harrison	Assistant, James Finlay & Co, Ld	1, Clive Street	ditto
	Staples, Edward Henry	Partner, Stewart & Co	8, Clive Street	ditto
	Stapleton, J R	Superintendent, Marconi Co, Ld	6, Old Post Office Street	ditto
	Stark, David Murray	Assistant, Macneill & Co	2, Fairlie Place	ditto
	Steedman, J A	Director, Mackintosh, Burn, Ld	8, Clive Street	ditto
	Steerwood, H A	Sub-Accountant, Lloyds Bank, Ld	101-1, Clive Street	ditto
	Stein, J A AM, ICE	Superintending Engineer, Presidency Circle, P W D	Writers' Buildings	ditto
	Step, G E	Partner, J Mackillican & Co	21, Old Court House Street	ditto
	Stephen, Robert George	Director, Standard Literature Co, Ld	13-1, Old Court House Street	ditto
	Sterndale, Reginald Marcus	Agent, Imperial Bank of India	8, Clive Street	ditto
	Stevens, Cecil Robert	Assistant, Ralli Bros, Ld	16, Hare Street	ditto
	Stewart, Hugh Patrick	Assistant, Blackwood, Blackwood & Co	4, Lyons Range	ditto
	Stewart, J A	Deputy Engineer, Calcutta Improvement Trust	5, Clive Street	ditto
	Stewart, Jas S	Manager, McGregor & Balfour, Ld	11, Clive Street	ditto
	Stewart, Redvers Buller	Managing Agent, Landale & Clark, Ld	11, Clive Street	ditto

Stewart, Thomas Brown	Partner, Morgan Walker & Co	2, Clive Ghat Street		ditto
Stiff, Arthur James	Director, Francis, Harrison, Hathway & Co, Ld	30, Chowringhee		ditto
Stoddard, W A	Assistant-in-charge, Staff Section, Imperial Bank of India	Strand Road		ditto
Stokes, H G	Partner, Shaw, Wallace & Co	4, Bankshall Street		ditto
Stokes, Noel Theodore	Assistant, Hamilton & Co, Ld	8, Old Court House Street		ditto
Strannack, Cecil Leslie	Partner, Sinclair & Co	5, Commercial Buildings		ditto
Stratford, N R	Assistant Executive Engineer, Port Commissioners' Office	Strand Road		ditto
Struth, David Leighton	Assistant Secretary, J. C Duffus & Co, Ld	104, Cilve Street		ditto
Stuart, H Sinclair	Partner, Lardner North & Co	8, Strand Road		ditto
Studd, Eric	Director, Alexander Jute Mills Co, Ld	8, Camac Street		ditto
Studdert, T G	Assistant, Bell's Asbestas & Engineering (India) Ld	10, Clive Street		ditto
Sturrock, George S	Merchant	1, British Indian Street		ditto
Sumner, Eric Lawton	Mains Engineer, C E S C, Ld	Victoria House		ditto
Surrey, J C	Tea Buyer, Harrisons & Crosfield, Ld	6, Church Lane		ditto
Sutherland, James Ferguson	Director, Martin & Harris, Ld	17, Prinsep Street		ditto
Sutherland, Walter, MA	Professor, Scottish Church College	4, Cornwallis Square		ditto
Swales, Terence Lindsay	Assistant, Ralli, Bros, Ld	16, Hare Street		ditto
Sweet, C G	Manager, North British Rubber Co, Ld	1, British Indian Street		ditto
Swinton, Thomas Swinhoe	Manager, Robert Kearsley & Co, Ld	11, Clive Street		ditto
Syme, A H	Partner, A M Mair & Co	6, Royal Exchange Place		ditto

No.	Names.	Style or calling.	Residence or place of business.	Religion.
	T			
	Tait, Alexander	Assistant, Thos Cook & Son, Ld	4, Dalhousie Square, East ..	Christian
	Tannock, James D	Accountant, Lionel Edwards, Ld	D-1, Clive Buildings	ditto
	Taylor, Alexander Hay	Assistant Manager, South British Insurance Co, Ld	5, Clive Street	ditto
	Taylor, Andrew William	Assistant, Macneill & Co	2, Fairlie Place	ditto
	Taylor, C M	Assistant, Burn & Co, Ld	12, Mission Row	ditto
	Taylor, A T	Director, Great Eastern Hotel, Ld	1, 2 & 3, Old Court House Street ..	ditto
	Taylor, R W	Dy Chief Engineer, E B R	3, Kaylaghat Street	ditto
	Taylor, W E	Dy Superintendent, Depositor's Dept, Imperial Bank of India	Strand Road	ditto
	Taylor, W R I	Accountant, Mercantile Bank of India, Ld	8, Clive Street	ditto
	Terrell, Wilfred Archibald Francis Cullen	Manager, British Refrigerators	30, Chowringhee	ditto
	Thackrah, S C	Manager, Spencer & Co, Ld	32, Chowringhee	ditto
	Thibaut, Ernest George	Mains Engineer, C E S C, Ld	Victoria House	ditto
	Thomas, C A	Accounts Officer, C A O's Office, E I R ..	E I R House	ditto
	Thomas, C F	Manager, Lloyds Bank, Ld.	101-1, Clive Street	ditto
	Thomas, H N	Partner, McLeod & Co	28, Dalhousie Square	ditto
	Thomas, P J P	Assistant, J Thomas & Co	8, Mission Row	ditto
	Thompson, A J, A R I B A ..	Partner, Ballardie, Thompson & Matthews	7, Old Court House Street ..	ditto

Thompson, Hartley William	Assistant, Ralli Bros, Ld	.. ..	16, Hare Street	.. ..	ditto
Thompson, Richard Hilton Marler	Director, Standard Literature Co, Ld	.. ..	13-1, Old Court House Street	..	ditto
Thoms, R S	Partner, Innes, Watson & Co	.. ..	15, Clive Row	.. ..	ditto
Thoms, S	Partner, Perman & Hynd	.. ..	9, Clive Street	.. ..	ditto
Thomson, Alexander Martin	Manager, Louis Dreyfus & Co	.. ..	2, Clive Row	.. ..	ditto
Thorman, Christopher Mark	Assistant, James Finlay & Co, Ld	.. ..	1, Clive Street	.. ..	ditto
Tindall, Charles Percy	Assistant, Place, Siddons & Gough	.. ..	6, Lyons Range	.. ..	ditto
Tingle, F	Assistant, Asbestos Cement, Ld	.. ..	135, Canning Street	.. ..	ditto
Todd, Andrew	Manager, Phipson & Co, Ld	.. ..	1, Garstin Place	.. ..	ditto
Todd, Thos	Assistant, Balmer, Lawrie & Co, Ld	.. ..	103, Clive Street	.. ..	ditto
Todd, W	Director, Macintosh, Burn, Ld	.. ..	8, Clive Street	.. ..	ditto
Todrick, G A	Acting Agent, Hongkong and Shanghai Banking Corporation	..	Hongkong House	.. ..	ditto
Toft, W	Partner, Price, Waterhouse, Peat & Co	.. ..	B-4, Clive Buildings	.. ..	ditto
Towler, R A	Partner, McLeod & Co	.. ..	28, Dalhousie Square	.. ..	ditto
Townend, H D	Partner, Shaw, Wallace & Co	.. ..	4, Bankshall Street	.. ..	ditto
Troup, George	Mains Engineer, C E S C, Ld	.. ..	Victoria House	.. ..	ditto
Trusler, William J	Executive Engineer, Workshops, Electrical Division, P W D	..	Writers' Buildings	.. ..	ditto
Tucker, A L B	Partner, Kilburn & Co	.. ..	4, Fairlie Place	.. ..	ditto

No.	Names.	Style or calling.	Residence or place of business.	Religion.
	Tuckett, Frederick Hayce (Capt)	Marine Superintendent, I G N & Ry Co, Ld	4, Fairlie Place	Christian
	Tuckett, William Fothergill	Assistant, Gillanders Arbuthnot & Co	8, Clive Street	ditto
	Tully, William Scarth Carlisle	Assistant, Gillanders Arbuthnot & Co	8, Clive Street	ditto
	Turnbull, John Bruce	Director, Hoare Miller & Co, Ld	5, Fairlie Place	ditto
	Turner, A W	Director, Bell's Asbestos and Engineering (India), Ld	10, Clive Street	ditto
	Turner, Neil Thomson	Manager, Walworth International Co	14-2, Clive Row	ditto
	Tyrie, George Aitken	Salvage Assessor, Sinclair, Murray & Co, Ld	6, Royal Exchange Place	ditto
	Tytler, Philip	Secretary, Caledonian Printing Co, Ld	3, Wellesley Place	ditto
	U			
	Urquhart, Ernest	Assistant, Bird & Co	1-1, Clive Street	Christian
	Urquhart, William Hubert Walton	Assistant, Andrew Yule & Co, Ld	8, Clive Row	ditto
	Utley, Walter Bennett	Chief Mechanical Engineer, Railway, Martin & Co	12, Mission Row	ditto
	V			
	Vaile, Maurice Arthur Stuart	Partner, Thos Seth Apcar & Co	F-1, Clive Buildings	Christian
	Valieri, Philip Gerrasimos	Head Manager, Ralli Brothers, Ld	16, Hare Street	ditto
	Vandyke, Frederick Reginald	Manager, Photo, Survey of India	14, Wood Street	ditto
	Vansomeren, L W	Deputy Traffic Manager, E B R	3, Kaylaghat Street	ditto

Venters, C W M	Import Superintendent, B I S N Co, Ld	8, Strand Road		ditto
Verrill, F D	Assistant, Balmer Lawrie & Co, Ld	103, Clive Street		ditto
Vevres, E	Director, Asbestos Cement (India), Ld	135, Canning Street		ditto
Vincent, J D A	Superintending Engineer, Electrical Circle, Bengal	Writers' Buildings		ditto
Vining, L E	Deputy Chief Operating Superintendent (Movement), E I R	E I R House		ditto
Vipond, Vernon Kenneth	Assistant, Royal Exchange Assurance	1 & 2, Old Court House Corner		ditto
Vlasto, Stephen John	Assistant, Ralli Bros, Ld	16, Hare Street		ditto
W				
Waggett, Stanley	General Manager, Associated British Machine Tool Makers, Ld	6, Old Post Office Street		Christian
Walford, John Arthur Stewart	Partner, Blacker & Co	2, Clive Street		ditto
Walker, A M	Hd Assistant, Accountant's Department, Imperial Bank of India	Strand Road		ditto
Walker, Cyril Oscar	Assistant, Anderson, Wright & Co	22, Strand Road		ditto
Walker, J R	Partner, McLeod & Co	28, Dalhousie Square		ditto
Walker, James Robert Law	Manager, Alliance Assurance Co, Ld	2, Hare Street		ditto
Walker, Thomas	Partner, Thomas Walker & Co	6, Royal Exchange Place		ditto
Walker, William John Barr	Accountant, Statesman, Ld	Statesman House		ditto
Walker, W J	Partner, W J Walker & Co	6, Commercial Buildings		ditto
Wallace, Ivan Ronald	Sole Proprietor, Ivan Ronald Wallace	135, Canning Street		ditto
Wallach, L J	Assistant, Imperial Chemical Industries (India), Ld	18, Strand Road		ditto

No.	Names.	Style or calling.	Residence or place of business.	Religion.
	Waller, George Dalrymple	Proprietor, George Waller & Co	29, Dalhousie Square	Christian
	Wallis, E R	Manager, Reuters, Ld	26-7, Dalhousie Square	ditto
	Walsh, E J	Assistant, Turner, Morrison & Co, Ld	6, Lyons Range	ditto
	Walton, P W	Assistant, Mather & Platt, Ld	7, Hare Street	ditto
	Ward, A M	Dy Chief Engineer, Port Commissioners' Office	Strand Road	ditto
	Wardley, A N	Partner, Kilburn & Co	4, Fairlie Place	ditto
	Wardrop, Gilbert Glen	Manager, Standard Telephones & Cables, Ld	C-2, Clive Buildings	ditto
	Ware, Gerald Oswald	Assistant, Andrew Yule & Co, Ld	8, Clive Row	ditto
	Warren, P F S	Director, Jessop & Co, Ld	93, Clive Street	ditto
	Warren-Boulton, C	Managing Director, Machine Tools (India), Ld	Stephen House	ditto
	Waters, John Henry	Mains Superintendent, C E S C, Ld	Victoria House	ditto
	Watkins, A C	Accountant, Chartered Bank of India, Australia & China	1-1, Clive Street	ditto
	Watling, H E F	Local Service Officer, C C M's Office, E I R	E I R House	ditto
	Watson, E F	Superintendent, Governor's Estates, Bengal	6, Wellesley Place	ditto
	Watson, Herbert Edward	Director & Manager, *Statesman*, Ld	Statesman House	ditto

Watson, J D, BSc	Executive Engineer, Dredger Subdivision	3, Charnock Place		ditto
Watson, N A R	Secretary, Jessop & Co, Ld	93, Clive Street		ditto
Watson, Thomas Hart	Branch Manager, Glenfield & Kennedy, Ld	4, Fairlie Place		ditto
Watson, William Bonar	Assistant, Andrew Yule & Co, Ld	8, Clive Row		ditto
Watt, B A	Sub-Accountant, Lloyds Bank, Ld	101-1, Clive Street		ditto
Watt, D C	Manager, General Accident, Fire & Life Assurance Corporation, Ld	7, Hare Street		ditto
Webb, Gilbert Murray	Director, J Boseck & Co, Ld	16-5, Chowringhee		ditto
Webb, H F	Manager, J Boseck & Co, Ld	16-5, Chowringhee		ditto
Webb, John Urquhart	Assistant, Hoare Miller & Co	5, Fairlie Place		ditto
Webber, J W	Manager, Phœnix Assurance Co, Ld	28, Dalhousie Square		ditto
Webster, A	Executive Engineer, Port Commissioners' Office	Strand Road		ditto
Webster, John Henry	Manager, Eastern Bank, Ld	9, Clive Street		ditto
Wharrier, Ernest Soulsby	Partner, Morgan Walker & Co	2, Clive Ghat Street		ditto
Wharton, A F	Partner, Thomas Walker & Co	6, Royal Exchange Place		ditto
Wharton, Frederick	Manager, Valvoline Oil Co	B-5, Clive Buildings		ditto
Wheeler, C D	Partner, Innes, Watson & Co	15, Clive Row		ditto
Wheeler, Harold Frank	Partner, Bird & Co	1-1, Clive Street		ditto

No.	Names.	Style or calling.	Residence or place of business.	Religion.
	Wheldon, Robert Joseph	Director, Houghton-Butcher (Eastern), Ld	10, Hungerford Street	Christian
	White, Ernest	Director, Elford Edwards, Ld	7, Old Court House Street	ditto
	White, Ernest Frank	Mechanical Engineer, T E Thomson & Co, Ld	9, Esplanade, East	ditto
	White, Philip	Accountant, British Insulated Cables, Ld	2, Waterloo Street	ditto
	White, S W	Executive Engineer, E I R	E I R House	ditto
	Whitehorn, Fredrick George	Accountant, Minimax, Ld	Mercantile Buildings	ditto
	Whiteside, Walter Bingham	District Manager, Dunlop Rubber Co (India), Ld	42, Free School Street	ditto
	Whitting, Richard	Accountant, Davenport & Co, Ld	6, Church Lane	ditto
	Whitney, V L	Assistant General Manager, Standard Vacuum Oil Co	6, Church Lane	ditto
	Whittall, Robert Hutchings	Branch Manager, Union Insurance Society of Canton, Ld	8, Clive Street	ditto
	Whittle, George Edwin	Mains Engineer, C E S C, Ld	Victoria House	ditto
	Whyte, George Clark	Assistant, Williamson, Magor & Co	4, Mangoe Lane	ditto
	Whyte, George Leonard	Assistant, Gillanders Arbuthnot & Co	8, Clive Street	ditto
	Whyte, M M	Assistant, Turner, Morrison & Co, Ld	6, Lyons Range	ditto
	Whyte, W M	Assistant, Thos Duff & Co, Ld	3, Clive Row	ditto
	Widgery, C	Assistant, Turner, Morrison & Co, Ld	6, Lyons Range	ditto
	Wiffen, Charles Arthur	Director, Ranken & Co, Ld	4, Old Court House Street	ditto

Wiggins, S	..	Tea Manager, Lipton, Ld	.. 9, Weston Street	.. ditto
Wilkins, C F W B	..	Assistant Manager, Government of India Press	.. 8, Hastings Street	.. ditto
Wilkinson, George	..	Representative, Fairbain Lawson Combe Barbour, Ld	.. 8, Clive Street	.. ditto
Wilkinson, G H	..	Manager, Bell's Asbestos and Engineering (India), Ld	.. 10, Clive Street ..	.. ditto
Williams, F C	..	Accountant, Octavius, Steel & Co, Ld	.. 14, Old Court House Street	.. ditto
Williams, Frederick George	..	Director & General Manager, Hukumchand Electric Steel Co, Ld	30, Clive Street ..	.. ditto
Williams, Louis, MBE	..	O C, No 1, Drawing Office, Survey of India	.. 13, Wood Street	.. ditto
Williams, Montague	..	Manager, G Atherton & Co (Eastern), Ld	.. 8, Clive Street	.. ditto
Williams, Theodore Mark	..	Assistant, James Finlay & Co, Ld	.. 1, Clive Street	.. ditto
Williams, Owen R	..	Director, Guest, Keen, Williams, Ld	.. 7, Council House Street	.. ditto
Williamson, Charls ..	..	Assistant, Gillanders, Arbuthnot & Co ..	.. 8, Clive Street ..	.. ditto
Williamson, James	..	Manager (Grocery), Army & Navy Stores, Ld	.. 41, Chowringhee	.. ditto
Williamson, R W ..	..	Director, Standard Literature Co, Ld ..	.. 13-1, Old Court House Street	.. ditto
Willmer, Eric John ..	..	Assistant, Bird & Co ..	.. 1-1 Clive Street ..	.. ditto
Wilson, Arthur ..	..	Assistant, Bird & Co ..	.. 1-1, Clive Street ..	.. ditto
Wilson, Charles	..	Assistant, Andrew Yule & Co, Ld	.. 8, Clive Row	.. ditto
Wilson, George Maxwell	..	Assistant, Gillanders, Arbuthnot & Co	.. 8, Clive Street	.. ditto
Wilson, John Lockhart ..	..	Manager, Lewis & Tylor Ld ..	.. 6, Church Lane ..	.. ditto
Wilson, J R ..	..	Partner, J Thomas & Co ..	.. 8, Mission Row ..	.. ditto

No.	Names.	Style or calling.	Residence or place of business.	Religion.
	Wilson, Mark Vidal	General Manager, Allahabad Bank, Ld	6, Royal Exchange Place ..	Christian
	Wilson, Ronald Westaway ..	Manager, Nestle & Anglo-Swiss Condensed Milk (Export) Co, Ld..	9, Clive Street	ditto
	Wilson, R T	Director, Allen Berry & Co, Ld	1-D Lord Sinha Road	ditto
	Wilson, Thomas Alexander ..	Assistant Manager, Bengal Iron Co, Ld ..	4, Lyons Range	ditto
	Winny, Thomas	Managing Director, Francis, Harrison, Hathaway & Co, Ld ..	30, Chowringhee	ditto
	Wise, Arthur Arnold	Assistant, Andrew Yule & Co, Ld	8, Clive Row	ditto
	Withall, William	Assistant, Bird & Co	1-1, Clive Street	ditto
	Witherington, Charles Hanington ..	General Secretary, European Association	17, Stephen Court, Park Street ..	ditto
	Womack, Harold Athelstan, (Cantab) MA	Engineer, Martin & Co	12, Mission Row	ditto
	Wood, H. Gary	Dy Chief Engineer, C E S C, Ld	Victoria House	ditto
	Woodburn, Sowter Cyril	Accountant, Martin & Co	12, Mission Row	ditto
	Woolford, C R B	General Manager, Robt Ingham Clark & Co, Ld	2, Clive Row	ditto
	Woodhouse, Sidney	Superintendent, Mathematical Instrument Office ..	15, Wood Street	ditto
	Worthington, Ralph Heron ..	Director, Andrew Yule & Co, Ld	8, Clive Row ..	ditto
	Wright, A C	Director, Turner Morrison & Co, Ld	6, Lyons Range	ditto
	Wright, Alex	Assistant, Anderson Wright & Co	22, Strand Road	ditto
	Wright, Eric William	Manager, Northern Assurance Co, Ld	7, Hare Street	ditto
	Wright, Frederick Charles ..	Manager, Texas Co (India), Ld	11, Esplanade, East	ditto

Yeld, P H	Dy Traffic Manager, E B R	3, Koylaghat Street	Christian
Young, Alexander Ogston	Assistant, F W Heilgers & Co	1-1, Clive Street	ditto
Young, James Steele	Director, John King & Co, Ld	2-C, Camac Street	ditto
Youngman, Reginald	Assistant, Williamson Magor & Co	4, Mangoe Lane	ditto
Younie, W J	Partner, Price, Waterhouse, Peat & Co	B-4, Clive Buildings	ditto
Yuille, George Herbert	Assistant, Williamson Magor & Co	4, Mangoe Lane	ditto

A

Abbasi, I A	Assistant Traffic Superintendent, E B R	3, Kaylaghat Street	Mahomedan
Achari, Gnanaprakasam	Accountant, Army Factory Accounts	6, Esplanade, East	Hindu
Acharya, Shailaja Prasanna, MA	Lecturer, Ripon College	24, Harrison Road	ditto
Acharya, Sushil Kumar, MSC	Lecturer, University College	92, Upper Circular Road	ditto
Addy, Kiran Chandra	Professor, St Paul's College	33-1, Amherst Street	Christian
Adhikari, M K	Assistant (2nd grade), Imperial Bank of India	Strand Road	Hindu
Adiseshiah, Malcolm Sathianathan	Professor, St Paul's College	33-1, Amherst Street	Christian
Aditya, Subodh Kumar	Engineer, Builder and Contractor	8-2, Hastings Street	Hindu
Aditya, Sudhir Kumar	Engineer and Contractor	8-2, Hastings Street	ditto
Agarwalla, Dwarka Nath	Manager, Mutual Indemnity and Finance Corporation (India), Ld	32/1, Dalhousie Square, South	ditto

No.	Names.	Style or calling.	Residence or place of business.	Religion.
	Agarwalla, Sangam Lal	Merchant ..	.. 6-A, Sibu Thakur Lane	Hindu
	Agharkar, S P, MA, PHD	Professor, University College ..	.. 92, Upper Circular Road ..	ditto
	Ahmed, A	Manager, Kian Gwan Co (India) Ld ..	.. 4, Lyons Range	Mahomedan
	Ahmed, Kazimuddin, MA ..	Professor, Islamia College ..	.. 8, Wellesley Street	ditto
	Ahmed, Khabiruddin (Khan Sahib), BA, BT	2nd Inspector of Schools, Presidency Division ..	.. 40-1A, Free School Street ..	ditto
	Ahmed, Maqbul	Professor, Presidency College ..	.. 86-1, College Street	ditto
	Ahmed, Qutabuddin (Maulvi) ..	Landholder ..	.. 7, Maulvi Lane	ditto
	Ahmed, Samsuddin	Proprietor, S Ahmed & Co ..	.. 4, Kanai Seal Street	ditto
	Ahmed, Tasaddak (Khan Bahadur), BA, BT	Special Officer, Primary Education, Bengal ..	.. Writers' Buildings	ditto
	Aikat, Amulya Charan, MA, BL ..	Professor, Vidyasagar College ..	.. 39, Shankar Ghose Lane	Hindu
	Ali, Abul Fiaz Muhammad Abdul ..	Keeper of the Records, Government of India ..	.. Treasury Buildings	Mahomedan
	Ali, S. Ashraff	Landholder ..	.. 1, Kaiser Street	ditto
	Ali, Shaik Mustafa	Landholder ..	.. 53, Elliot Road	ditto
	Ali, Syed Asghar, BA	Zamindar ..	.. 4, Hyat Khan Lane	ditto
	Ali, Syed Sadat	Lower Limit Income-Tax Officer ..	.. 1, Hare Street	ditto
	Anisuddin, Cadi Abul Moin Mohd, FRSA	Representative, Indian National Industrial Co ..	.. 126A-1, Dharamtala Street ..	ditto

Arora, B	Assistant Personal Officer, E B R ..	.. 3, Koylaghat Street ..	Hindu
Asadulla, K M, BA	Librarian, Imperial Library ..	.. 6, Esplanade, East	ditto
B			
Bagchi, Haridas, MA, PHD ..	Lecturer, University College ..	.. Senate House	ditto
Bagchi, Prabodh Chandra, MA, D LITT	Lecturer, University College ..	.. Senate House	ditto
Bagchi, Shashanka Shekhar ..	Lecturer, Presidency College ..	.. 86-1, College Street	ditto
Bagla, Hanuman Prasad ..	Partner, Bagla & Co ..	.. 7, Lyons Range ..	ditto
Bagla, Mahadeo Prasad	Partner, Bagla & Co ..	.. 7, Lyons Range	ditto
Bajoria, Baijnath	Assistant, Shewdayal Ramjeedas ..	.. 130, Mechuabazar Street	ditto
Bajoria, Ramjidas	Banker and Merchant ..	.. 130, Mechuabazar Street ..	ditto
Bajpeyi, Umapati, MA	Professor, Ripon College ..	.. 24, Harrison Road	ditto
Bakir, Abu	Accountant, A-G's Office, Bengal ..	.. Treasury Buildings	Mahomedan
Baksh, A F Nabi	Dy Assistant Valuer, Calcutta Improvement Trust ..	.. 5, Clive Street	ditto
Baksh, Mahammad Maula (Khan Bahadur), BA	Assistant D P I for Mahomedan Education, Bengal	.. Writers' Buildings	ditto
Bal, Surendra Nath, MSC ..	Curator, Botanical Survey of India ..	.. Indian Museum	Hindu
Banker, Manocher Shapurjee ..	Sub-Accountant, National City Bank of New York ..	.. 4, Clive Street	ditto
Banerji, Abani Kumar, MSC ..	Professor, Vidyasagar College ..	.. 39, Shankar Ghose Lane ..	ditto
Banerji, Amarendra Nath, MSC ..	Lecturer, Ripon College ..	.. 24, Harrison Road	ditto

No.	Names.	Style or calling.	Residence or place of business.	Religion.
	Banerji, Amulya Chandra ..	Assistant Engineer-in-charge, E and D, Calcutta Corporation ..	Municipal Office ..	Hindu
	Banerji, Amulya Ratan ..	Assistant Engineer, City Division, P W D ..	Writers' Buildings ..	ditto
	Banerji, Anadi Nath, BE ..	Outfall Engineer, Calcutta Corporation ..	Municipal Office ..	ditto
	Banarji, Atul Chandra ..	Sr. Accountant, A-G's Office, Bengal ..	Treasury Buildings ..	ditto
	Banerji, Balai Chandra ..	Partner, The Eastern Japan Trading Co ..	8, Dalhousie Square, East ..	ditto
	Banerji, Banshi Bihari, BA ..	Assistant, Martin & Co ..	12, Mission Row ..	ditto
	Banerji, Benayendra Nath, MA ..	Professor, Vidyasagar College ..	39, Shankar Ghose Lane ..	ditto
	Banerji, Debjiban, MSC ..	Director, Kuver, Ld ..	84, Clive Street ..	ditto
	Banarji, Dhirendra Nath ..	Electrical Upper Subordinate, Govt. House, Calcutta ..	Government House ..	ditto
	Banarji, Dhirendra Nath, LCE	Extra Asstt., Superintendent (Drawing), Survey of India ..	13, Wood Street ..	ditto
	Banerji, Dinesh Chandra, BE	Insecure Building Inspector, Calcutta Corporation ..	Municipal Office ..	ditto
	Banerji, Durgadas, MSC ..	Lecturer, University College ..	92, Upper Circular Road ..	ditto
	Banerji, Durga Mohan ..	P. W. Sr. Accountant, Accountant-General's Office, Bengal ..	Treasury Buildings ..	ditto
	Banerji, Haridas, MSC ..	Demonstrator, Scottish Church College ..	4, Cornwallis Square ..	ditto
	Banerji, Hari Prasanna, MA ..	Lecturer, University College ..	Senate House ..	ditto
	Banerji, Hiran Kumar, MA, B Litt (Oxon)	Professor, Presidency College ..	86-1, College Street ..	Christian

Banerji, Indu Bhusan, MA	..	Lecturer, University College	..	..	Senate House	..	.. Hindu
Banerji, Jatindra Nath ..	..	Building Surveyor, Calcutta Corporation	..	..	Municipal Office	..	.. ditto
Banerji, J C ..	..	General Manager, J C Banerjee, Ld	..	..	20, Strand Road	..	.. ditto
Banerji, Jitendra K ..	..	Superintendent, Chief Mechanical Engineer's Office, E B R	..	..	3, Kaylaghat Street	..	.. ditto
Banerji, Jnanendra Nath, BL	..	Offg. Sr. Auditor, E B R	..	..	3, Kaylaghat Street	..	.. ditto
Banerji, K ..	..	Merchant	..	..	8, Canning Street	..	.. ditto
Banarji, Kanailal	..	Professor, St. Paul's College	..	..	33-1, Amherst Street	..	.. ditto
Banerji, K D ..	..	Partner, Pigott Chapman & Co	..	..	6, Lyons Range	..	.. ditto
Banerji, Kirtish Chandra, MA	..	Lecturer, Ripon College	..	..	24, Harrison Road	..	.. ditto
Banerji, K P (Rai Sahib)	..	Asstt Secretary, Agent's Office, E B R	..	..	3, Kaylaghat Street	..	.. ditto
Banerji, Kshirode Chandra, BE	..	District Building Surveyor, Calcutta Corporation	..	..	Municipal Office	..	.. ditto
Banerji, Manmatha Nath, MSc	..	Lecturer, University College	..	..	Senate House	..	.. ditto
Banerji, Nani Gopal, BSc, BE	..	Asstt Engineer, J C Banerjee, Ld	..	..	20, Strand Road	..	.. ditto
Banerji, Narayan Chandra, MA PhD	..	Lecturer, University College	..	..	Senate House	..	.. ditto
Banerji, Narendra Nath, MA, BL	..	Registrar, Surveyor-General's Office	..	..	13, Wood Street	..	.. ditto
Banarji, Nilambu Kanta, MSc	..	Partner, A & N Banerjee Co	..	..	84-A, Clive Street	..	.. ditto
Banerji, Nirmal Kumar, MA	..	Addl. Income-Tax Officer	..	..	1, Hare Street	..	.. ditto
Banerji, Nripendra Chandra MA	..	Professor, City College	..	..	102-1, Amherst Street		.. ditto

No.	Names.	Style or calling.	Residence or place of business.	Religion.
	Banarji, Pashupati ..	.. Accountant, A-G's Office, Bengal ..	.. Treasury Buildings ..	.. Hindu
	Banerji, P G ..	.. Partner, Banarjee & Co ..	.. 7, Swallow Lane ..	.. ditto
	Banerji, Prabodh Chandra	.. Assistant, Martin & Co ..	.. 12, Mission Row ..	.. ditto
	Banarji, Prabodh Chandra	.. Merchant ..	.. 28, Clive Street ..	.. ditto
	Banerji, Prabodh Chandra	.. Cashier, Birkmyre Bros ..	.. 6, Clive Row ..	.. ditto
	Banerji, Pratap Chandra ..	.. Assistant, Martin & Co ..	.. 12, Mission Row ..	.. ditto
	Banarji, Purna Chandra ..	.. Offg. L G S Officer, E I R ..	.. E I R House ..	.. ditto
	Banerji, Rabindra Nath ..	.. Elec. Engineer, Port Commissioners' Jetties ..	.. Jetties ..	.. ditto
	Banerji, Rajkumar, MA ..	.. Professor, Bangabasi College ..	.. 25-1, Scott Lane ..	.. ditto
	Banarji, Rakhaldas ..	.. Auditor, Chief Auditor's Office, E I R ..	.. E I R House ..	.. ditto
	Banerji, Ramapati ..	.. Manager, Bengal Stores (Birla Bros, Ld) ..	.. 8A, Chowringhee Place ..	.. ditto
	Banerji, Sanat Kumar, BE	.. Insecure Building Inspector, Calcutta Corporation ..	.. Municipal Office ..	.. ditto
	Banerji, Santos Kumar, MSc	.. Lecturer, Bethune College ..	.. 181, Cornwallis Street ..	.. ditto
	Banerji, Satyapriya, MA, BL	.. Director, Sanyal Banerjee & Co, Ld ..	.. 268, Bowbazar Street ..	.. ditto
	Banerji, Satyendra Nath, BSc, ACII	.. Secretary, National Insurance Co, Ld ..	.. 7, Council House Street ..	.. ditto
	Banerji, S. C., BA ..	.. Director, Eureka Publicity Service ..	.. 157B, Dharamtala Street ..	.. ditto
	Banerji, Shachindra Nath ..	.. Asstt. Accountant, Bengal Telephone Corporation, Ld	.. 8, Hare Street ..	.. ditto

Banerji, Shrikumar, MA, PhD	.. Professor, Presidency College	.. ..	86-1, College Street	ditto
Banerji, S N	Personal Assistant to the Chief Mining Engineer, Railway Board		1, Council House Street ..	ditto
Banerji, S N, B Sc (Glas)	.. Asstt, Engineer, Special Officer's Department, Calcutta Corporation		Municipal Office	ditto
Banerji, S. N. (*Rai Bahadur*)	.. Superintending Engineer, Southern Circle, P W D	..	3, Government Place, West ..	ditto
Banerji, Sourendra Mohan, MA, BL	.. Professor, Vidyasagar College	.. ..	39, Shankar Ghose Lane ..	Christian
Banerji, Surendra Chandra, MA, BSc	.. Professor, Presidency College	.. ..	86-1, College Street	Hindu
Banerji, Sushil Chandra, BA	.. Head Assistant, Bengal Secretariat, Appointment Department	..	Writers' Buildings ..	ditto
Banerji, T N, BA, CE, MIE	.. Engineer	.. ..	6, Hastings Street	ditto
Baral, Anupchand	Landholder	.. ..	9-1, Sikdarpara Street	ditto
Baral, Gour Chand	Cashier, Imperial Tobacco Co of India, Ld	..	37, Chowringhee	ditto
Bardhan, Jogendra Chandra, DSc	.. Lecturer, Calcutta University	.. ..	92, Upper Circular Road ..	ditto
Barua, Beni Madhab, MA, DLitt	.. Professor, University College	.. ..	Senate House	Buddhist
Basak, Gagan Chandra	Engineer	.. ..	14-3, Sovaram Basak Street ..	Hindu
Basak, Ganga Gobinda, MA	.. Demonstrator, Presidency College	.. ..	86-1, College Street	ditto
Basak, Radha Gobinda	Professor, Presidency College	.. ..	86-1, College Street	ditto
Basu, Abinash Chandra, MA	.. Assistant Accountant-General, Bengal	.. ..	Treasury Buildings	ditto
Basu, Abinash Chandra, MA	.. Professor, Sanskrit College	.. ..	College Square	ditto

No.	Names.	Style or calling.	Residence or place of business.	Religion.
	Basu, Akshaya Kumar	Actg. Secretary, Bengal Bonded Warehouse Association ..	102, Clive Street	Hindu
	Basu, Amiya Nihar	P A to Director-General of Commercial Intelligence ..	1, Council House Street ..	ditto
	Basu, Arabindaksa	Merchant	143, Dharamtala Street	ditto
	Basu, Atul Krishna	Deputy Assistant Valuer, Calcutta Improvement Trust ..	5, Clive Street	ditto
	Basu, Basanta Kumar (*Rai Bahadur*)	Coal Com. Superintendent, C. O. P. S. Office, E. I. R. ..	E. I. R. House	ditto
	Basu, Bhupendra Nath, BA ..	Assistant, Gillanders Arbuthnot & Co	8, Clive Street	ditto
	Basu, Bijaya Krishna	Representative, Laski & Laski, Manchester	70, Clive Street	ditto
	Basu, Bimalendu Bhusan, MA ..	Addl. Income-Tax Officer	3, Government Place, West ..	ditto
	Basu, Binaya Bhusan, BE ..	Engineer and Contractor	33, Badurbagan Lane	ditto
	Basu, Binaya Bhusan, BE ..	Building Inspector, Calcutta Corporation	Municipal Office	ditto
	Basu, Binode Bihari	Representative, Spicers (Export), Ld	Stephen House	ditto
	Basu, Bishnupada	Director, Bengal Waterproof Works, Ld	12, Chowringhee	ditto
	Basu, B K, BE	Engineer	33, Badurbagan Street	ditto
	Basu, B K, BE	Engineer	4, Hastings Street	ditto
	Basu, Charu Chandra	Cashier, Barlow & Co	37, Strand Road	ditto
	Basu, C R, BE	Assistant, S K Chakravarti, Ld	1-1A, Mission Road	ditto
	Basu, Debendra Mohan MA, BSC, PHD	Professor, University College ..	92, Upper Circular Road ..	Brahmo
	Basu, Dhirendra Nath	Partner, D N Bose & Co	12, Kalidas Sinha Lane	Hindu

Basu, Gurugobinda, BA	Proprietor, G Basu & Co	3-1, Bankshall Street		ditto
Basu, Haradhan	Decorator, Martin & Co	12, Mission Row		ditto
Basu, Hrishikesh	Professor, St. Paul's Cathedral College	33-1, Amherst Street		ditto
Basu, Jitendra Nath, MA	Accountant, Office of the Controller of Army Factory Accounts	6, Esplanade East		ditto
Basu, J N, BA, CE	Engineer	8-2, Hastings Street		ditto
Basu, Jogindra Mohan, BA	Director, Bengal Waterproof Works, Ld	12, Chowringhee		ditto
Basu, Jugal Kishore	Asstt. Cashier, Martin & Co	12, Mission Row		ditto
Basu, K	Superintendent, Imperial Record Department	2, Government Place, West		ditto
Basu, Kalipada, BA	Head Assistant, Bengal Secretariat, Reforms Branch	Writing's Buildings		Brahm
Basu, Keshab Ch, BE, CE	Inspector of Works, C E's Office, E I R	E I R House		Hindu
Basu, Mahimaranjan	Building Surveyor, Calcutta Corporation	Municipal Office		ditto
Basu, Mahimohan, BA (Oxon)	Professor, Scottish Church College	4, Cornwallis Square		Christian
Basu, M C	Engineer and Contractor	47, Hari Ghosh Street		Hindu
Basu, Nagendra Nath, MSc	Professor, Ripon College	24, Harrison Road		ditto
Basu, Nani Gopal, BE	Chief Estimator and Draftsman, Chief Engineer's Department, Calcutta Corporation.	Municipal Office		ditto
Basu, Narayan Das, MSc	Professor, Islamia College	8, Wellesley Street		ditto
Basu, Narendra Mohan	Professor, Presidency College	86-1, College Street		ditto

No.	Names.	Style or calling.	Residence or place of business.	Religion.
	Basu, Naresh Chandra ..	.. Dy Assistant Valuer, Calcutta Improvement Trust	.. 5, Clive Street	Hindu
	Basu, N N, MA ..	.. Chief Accountant, Calcutta Corporation ..	.. Municipal Office	ditto
	Basu, N N ..	.. District Manager, Manufacturers' Life Insurance Co	.. 27, Dalhousie Square ..	ditto
	Basu, Panna Lal ..	.. Merchant ..	.. 62, Amherst Row	ditto
	Basu, Panitos, BE .	.. Engineer ..	.. 30-6-2, Madan Mitra Lane ..	ditto
	Basu Pashupati ..	.. Manager, C C Shaha & Co ..	.. 170, Dharamtala Street	ditto
	Basu, P C, BSC (Glas) ..	.. Executive Engineer, Drainage, Calcutta Corporation	.. Municipal Office	ditto
	Basu, P C, (*Rai Bahadur*	.. Distt. Traffic Superintendent, E B R ..	.. 3, Kayaghat Street	ditto
	Basu, Phani Gopal, BA ..	.. Landholder ..	12, Beadon Row	ditto
	Basu, P K ..	.. Principal, Bangabasi College ..	25-1, Scott Lane	ditto
	Basu, P K, MA ..	.. Assistant Accountant-General, Bengal ..	.. Treasury Buildings ..	ditto
	Basu, P N ..	.. Director, Kuver, Ld ..	84, Clive Street ..	ditto
	Basu, Prabodh Ch ..	.. Officer, Hindusthan Co-operative Insurance Society Ld	.. Hindusthan Buildings ..	ditto
	Basu, Prafulla K, MA, BL ..	Officer, Hindusthan Co-operative Insurance Society, Ld	.. Hindusthan Buildings ..	ditto
	Basu, Prafulla Kumar, DSC	.. Lecturer, University College ..	.. 92, Upper Circular Road	ditto
	Basu, Prasad Priya	.. Junior Auditor, E B R	.. 3, Kaylaghat Street	ditto
	Basu, Santosh Kumar ..	.. Engineer, Bhattacharjee & Co	.. 28, Pollock Street	ditto
	Basu, Sarjaksha BSC (Glas)	.. Assistant Engineer. John King & Co., Ld ..	.. 143, Dharamtala Street ..	ditto

Basu, Satish Chandra	Sub-Assessor, Calcutta Corporation	..	.. Municipal Office	..	.. ditto
Basu, Satish Chandra, BE ..	Engineer, Bhattacharjee & Co	..	.. 28 Pollock Street	..	.. ditto
Basu, Satyapriya, B com (Lond) ..	Assistant, Martin & Co	..	.. 12, Mission Row	..	.. ditto
Basu, Shailendra Nath, BA ..	Audit Officer, Calcutta University	..	.. Senate House	..	.. ditto
Basu, Shishir Kumar	Editor, " Vagnadoot "	..	.. 198-1, Cornwallis Street		.. ditto
Basu, S N	Landholder	..	.. 13, Harro Lal Mitter Street		.. ditto
Basu, Shishir Kumar, MA ..	Sub-Assessor, Calcutta Corporation	..	Municipal Office	..	.. ditto
Basu, Shrihari	Accountant, W W Extension Department, Calcutta Corporation		Municipal Office	..	.. ditto
Basu, Shrish Chandra	Landholder	..	.. 13, Balaram Mazumdar Street		.. ditto
Basu, Sourendra Nath, MA ..	Accountant, Office of the Controller of Army Factory Accounts		6, Esplanade East		.. ditto
Basu, Subodh Kumar	Branch Manager, G E C (India), Ld	..	13, Hare Street	..	.. ditto
Basu, Suresh Chandra	Senior Accountant, A G's Office, Bengal	..	.. Treasury Buildings	..	.. ditto
Basu, Sushil Kanta, BSC	Resident Secretary, Great Eastern Life Assurance Co, Ld		1, Royal Exchange Place		.. ditto
Basu, Sudhir Chandra, MSC (Cal) BSC (Lond)	Engineer, Bhattacharjee & Co	..	.. 28, Pollock Street		.. ditto
Basu, Upendra Nath	Landholder	..	.. 162-1, Upper Chitpur Road		.. ditto
Batabyal, Kalachand, BA ..	Superintendent, Metropolitan Institution (Main)	..	.. 39, Sankar Ghose Lane	..	.. ditto
Batabyal, S S	Dy Assistant Valuer, Calcutta Improvement Trust		5, Clive Street		.. ditto
Batliboy, Sorab R ..	Incorporated Accountant, S R Batliboy & Co	..	.. 1-B, Old Post Office Street		.. Zoroastrian
Beed, Indrabhusan	Landholder	.	.. 14, Srinath Das Lane	..	.. Hindu

No.	Names.	Style or calling.	Residence or place of business.	Religion.
	Bery, Atmaram	Partner, Bery Bros	15, Clive Street	Hindu
	Bery, Paramanand	Partner, Bery Bros	15, Clive Ctreet	ditto
	Bhaduri, A C, MA	Chairman, Enterprisers' Organization, Ld	14, Clive Street	ditto
	Bhaduri, B	Engineer	3-1, Madan Mitter Lane	ditto
	Bhaduri, Amulya Chandra, MA	Secretary, Guranteed Relief Syndicate, Ld	14, Clive Street	ditto
	Bhaduri, J S, MSc	Managing Director, Enterprisers Organization, Ld	14, Clive Street	ditto
	Bhaduri, Jyotsna Shankar, MSc	Managing Director, Guranteed Relief Syndicate,	14, Clive Street	ditto
	Bhaduri, Sadananda	Professor, Presidency College	86-1, College Street	ditto
	Bhagat, Manilal Maneklal	Assistant, Andrew Yule & Co, Ld	8, Clive Row	ditto
	Bhagat, M G	General Manager, Bengal Potteries, Ld	11, Rawdon Street	ditto
	Bhanja, Jitendra Nath, BE	Insecure Building Inspector, Calcutta Corporation	Municipal Office	ditto
	Bhar, Gurudas, MSc	Professor, Presidency College	86-1, College Street	ditto
	Bhar, Shyamapada	Assistant, Marfin & Co	12, Mission Row	ditto
	Bhargava, Jagadish Prasad	Assistant, Andrew Yule & Co, Ld	8, Clive Row	ditto
	Bhatia, R B, BA	Proprietor, Indian Trading Corporation	2, Lyons Range	ditto
	Bhattacharya, Amulya K, BA	Sub-Assessor, Calcutta Corporation	Municipal Office	ditto
	Bhattacharya, Arabinda	Superintendent, Central Typing Section, E I R	E I R House	ditto
	Bhattacharya, Barada Kumar, BA	Lower Limit Income Tax Officer	6, Esplanade East	ditto

Bhattacharya, Bhavabibhuti ..	Professor, Bangabasi College ..	..	25-1, Scott Lane ..	.. ditto
Bhattacharya, Bhutnath ..	Resident Engineer, J C Banerjee, Ld ..	..	2, Strand Road ..	.. ditto
Bhattacharya, Bijaya Krishna, MA ..	Lecturer, City College ..	..	102-1, Amherst Street ..	.. ditto
Bhattacharya, Birendra Nath, BE ..	Constructional Engineer, Calcutta Corporation ..	..	Municipal Office ..	.. ditto
Bhattacharya, Bireshwar ..	Asstt Manager, Universal Trading Union ..	..	9, Dalhousie Square ..	.. ditto
Bhattacharya, Bishnu Charan, MA ..	Professor, Vidyasagar College ..	..	39, Shankar Ghose Lane ..	.. ditto
Bhattacharya, Charu Chandra ..	Demonstrator, Presidency College ..	..	86-1, College Street ..	.. ditto
Bhattacharya, Durgamohan, MA ..	Professor, Scottish Church College ..	..	4, Cornwallis Square ..	.. ditto
Bhtatacharya, Dwijendra Nath, MA, BL	Professor, Vidyasagar College ..	..	39, Sankar Ghose Lane ..	.. ditto
Bhattacharya, Girijapati, MSc ..	Manager, Adair, Dutt & Co, Ld ..	..	5, Dalhousie Square ..	.. ditto
Bhattacharya, Gopinath, MA, PRS ..	Lecturer, Bethune College ..	..	181, Cornwallis Street ..	.. ditto
Bhattacharya, Harimohan ..	Sr Accountant, Accountant-General's Office, Bengal ..	..	Treasury Buildings ..	.. ditto
Bhattacharya, Harinath ..	Chief Valuer and Surveyor, Calcutta Corporation ..	..	Municipal Office ..	.. ditto
Bhattacharya, Jogendra Nath ..	Superintendent, Legislative Department, Bengal ..	..	Council House ..	.. ditto
Bhattacharya, K ..	Branch Manager, Great Eastern Life Assurance Co, Ld	..	1, Royal Exchange Place	.. ditto
Bhattacharya, Keshab Chandra ..	Sub-Accountant, Imperial Bank of India ..	..	Strand Road ..	.. ditto
Bhattacharya, Lalit Mohan, MA ..	Head Master, Maharaja Cossimbazar Polytechnic Institute	..	1, Nanda Lal Bose Lane ..	.. ditto
Bhattacharya, Manamohan, BSc ..	Superintendent, College Street Market ..	..	College Street Market ..	.. ditto

No.	Names.	Style or calling.	Residence or place of business.	Religion.
	Bhattacharya, Milan Chandra, BL	Chief Clerk, C C M's Office, E I R	E I R House	Hindu
	Bhattacharya, Narendra Nath	Proby Sub-Accountant, Imperial Bank of India	Strand Road	ditto
	Bhattacharya, Nibaran Chandra, MA, BSC	Professor, Presidency College	86-1, College Street	ditto
	Bhattacharya, Nikunja Bihari	Sr Accountant, A G's Office, Bengal	Treasury Buildings	ditto
	Bhattacharya, Nirmal Chandra, MA, BL	Professor, Scottish Church College	4, Cornwallis Square	ditto
	Bhattacharya, Panchanan, MA	Lecturer, Bethune College	181, Cornwallis Street	ditto
	Bhattacharya, P C	Director, Associated Engineers, Ld	14, Clive Street	ditto
	Bhattacharya, Rasamaya, MA	Professor, Scottish Church College	4, Cornwallis Square	ditto
	Bhattacharya, S	Managing Agent, Bengal Luxmi Cotton Mills, Ld	28, Pollock Street	ditto
	Bhattacharya, Sachchidananda, MA	Lecturer, Sanskrit College	College Square	ditto
	Bhattacharya, Shiva Prasad	Lecturer, Presidency College	86-1, College Street	ditto
	Bhattacharya, Sanatan	Sr Auditor, E B R	3, Kaylaghat Street	ditto
	Bhattacharya, Satish Chandra, MA	Lecturer, City College	102-1, Amherst Street	ditto
	Bhattacharya, Satya Jiban, BL	Assistant Manager, Sitalprasad Kharagprasad	31, Burtolla Street	ditto
	Bhattacharya, Umesh Ch	Professor, Presidency College	86-1, College Street	ditto
	Bhattar, Bulaki Das	Partner, Sir Sarupchand Hukumchand & Co	30, Clive Street	ditto

Bhattar, Deo Kissen ..	.. Partner, Sir Sarupchand Hukum Chand & Co	..	.. 30, Clive Street ..	.. ditto
Bhattar, Pannalal ..	.. Partner, Sir Sarupchand Hukum Chand & Co	..	.. 36, Clive Street ..	.. ditto
Bhattar, Sheokissen ..	.. Partner, Sir Sarupchand Hukumchand & Co	..	.. 30, Clive Street ..	.. ditto
Bholanath, A ..	.. Welfare Officer, E B R	..	.. 3, Kaylaghat Street ..	.. ditto
Bhose, Gunendra Nath ..	.. Landholder	..	.. 71-2, Cornwallis Street ..	.. ditto
Bhose, Sarojendra Nath ..	.. Shroff, Hoare Miller & Co, Ld	..	.. 5, Fairlie Place ..	.. ditto
Birla, B M ..	.. Director, Birla Bros, Ld	..	.. 8, Royal Exchange Place	.. ditto
Birla, G ..	.. Director, Birla Bros, Ld	..	.. 8, Royal Exchange Place	.. ditto
Birla, G D ..	.. Director, Birla Bros, Ld	..	.. 8, Royal Exchange Place	.. ditto
Birla, J K ..	.. Director, Birla Bros, Ld	..	.. 8, Royal Exchange Place	.. ditto
Birla, L N ..	.. Director, Birla Bros, Ld	..	.. 8, Royal Exchange Place	.. ditto
Biswas, Anil Kumar ..	.. Partner, D N Biswas & Co	..	.. 10, Dalhousie Square, East	.. ditto
Biswas, Bipradas, BL ..	.. Head Assistant, Surveyor-General's Office	..	.. 13, Wood Street ..	.. ditto
Biswas, Chuni Lal ..	.. Partner, K C Biswas & Co	..	.. 1, Chowringhee ..	.. ditto
Biswas, Durgapada, MA ..	.. Lecturer, Ripon College	..	.. 24, Harrison Road ..	.. ditto
Biswas, Jatindra Nath, MA, BSC ..	Engineer and Contractor	..	.. 36-1, Harrison Road ..	.. ditto
Biswas, J N ..	.. Assistant Branch Secretary, Oriental Government Security Life Assurance Co, Ld		2, Clive Row ..	.. ditto
Biswas, Kshitish Chandra	.. Dy Assistant Valuer, Calcutta Improvement Trust	..	.. 5, Clive Street ..	.. ditto

No.	Names.	Style or calling.	Residence or place of business.	Religion.
	Biswas, Nalini Mohan ..	.. Building Surveyor, Calcutta Corporation ..	.. Municipal Office ..	.. Hindu
	Biswas, Priya Nath, MSC ..	.. Professor, Vidyasagar College ..	.. 39, Shankar Ghose Lane ..	.. ditto
	Biswas, Purna Chandra, MA	.. Professor, Vidyasagar College ..	.. 39, Sankar Ghose Lane ..	.. ditto
	Biswas, Sanat Kumar	.. Engineer and Proprietor, Bengal Engineering Syndicate	.. 137, Canning Street ..	.. ditto
	Biswas, Satyapriya, MA ..	.. Professor, Scottish Church College ..	.. 4, Cornwallis Square ..	.. Christian
	Biswas, Sharatlal, MSC ..	.. Lecturer, University College ..	.. 92, Upper Circular Road ..	.. Hindu
	Biswas, Sudhabindu, MSC	.. Proprietor, Sun Optical Co ..	.. 24-1, Cornwallis Street ..	.. Brahmo
	Biswas, Sudhir Ranjan, MA	.. Asstt Secretary, Bengal National Chamber of Commerce	.. 2, Royal Exchange Place..	.. Hindu
	Biswas, Surendra Nath ..	.. Assistant (2nd grade), Imperial Bank of India ..	.. Strand Road ..	.. ditto
	Boga, Mahomed Karim ..	.. Manager, Currimbhoy & Co, Ld ..	.. 33B, Ezra Street ..	.. Mahomedan
	Bokil, R K ..	.. Assistant Commercial Manager, E I R ..	.. E I R House ..	.. Hindu
	Borah, Ambikanath, MA	.. Assistant, Martin & Co ..	.. 12, Mission Row ..	.. ditto
	Borah, Gobind Chand, BA	.. Secretary, Jute Balers' Association ..	.. 5, Royal Exchange Place..	.. ditto
	Bose, N C (Rai Sahib), ISO, MBE	.. Superintendent, Office of the Private Secretary to H E the Governor of Bengal.	Government House ..	.. ditto
	Brahma, Nalini Kanta ..	.. Professor, Presidency College ..	.. 86-1, College Street ..	.. ditto
	Brahma, Nishi Kanta, MA, BL	.. Asstt Manager, Tagore Raj Estate ..	.. Tagore Castle ..	.. ditto
	Butiwala, Manchesa Maneckji	.. Accountant, Muller and Phipps (India), Ld ..	.. Avenue House, Chowringhee Square	Zoroastrian

Chakladar, Haran Chandra, MA	Lecturer, University College	Senate House		Hindu
Chakravarti, B B, BA	Head Master, Brahmo Boys' School	31, Jhamapukur Lane		Brahmo
Chakravarti, Bhupendra Nath, MA	Professor, City College	102-1, Amherst Street		Hindu
Chakravarti, Bhutnath, LCE	Director, Standard Engineering Co, Ld	103, Bowbazar Street		ditto
Chakravarti, Brajendra Nath, DSC	Lecturer, University College	92, Upper Circular Road		ditto
Chakravarti, D D	Asstt Engineer, Port Commissioners' Office	Strand Road		ditto
Chakravarti, Dhirendra Nath, PhD	Vice-Principal, Ripon College	24, Harrison Road		ditto
Chakravarti, Dinesh Chandra	Superintendent, Land Acquisition Office	5, Bankshall Street		ditto
Chakravarti, Dwijendra Kumar	Cashier, Standard Life Assurance Co, Ld	32 & 32-1, Dalhousie Square		ditto
Chakravarti, Gurupada, BL	Superintendent, Indian Art School	240-A, Bowbazar Street		ditto
Chakravarti, Haricharan, BL	Manager, Bharat Insurance Co Ld	Bharat Bhawan, Chittaranjan Avenue		ditto
Chakravarti, Jatindra Nath, MA, BL	Head Master, Calcutta Academy	72, Amherst Street		ditto
Chakravarti, Jitendra Nath	Professor, Bangabasi College	25-1, Scott Lane		ditto
Chakravarti, Jogesh Chandra, MA	Audit Inspector, Calcutta Corporation	Municipal Office		ditto
Chakravarti, Kalidas, MA	Professor, City College	102-1, Amherst Street		ditto
Chakravarti, Khagendra Nath	Professor, Presidency College	86-1, College Street		ditto
Chakravarti, Madhab Das, MA	Professor, Vidyasagar College	39, Shankar Ghose Lane		ditto

No.	Names.	Style or calling.	Residence or place of business.	Religion.
	Chakravarti, Manamohan, BA ..	Assistant Head Master, Maharaja Cossimbazar Polytechnic Institute	1, Nanda Lal Bose Lane	Hindu
	Chakravarti, Manaranjan ..	Accountant, Bengal Central Bank, Ld	86, Clive Street	ditto
	Chakravarti, Manmatha Nath (*Rai Bahadur*)	Landholder	76, Ramkanta Bose Street ..	ditto
	Chakravarti, Nirmal Chandra, MA ..	Lecturer, City College	102-1, Amherst Street	Brahmo
	Chakravarti, P N	Secretary, United India Life Assurance Co, Ld	2, Lyons Range	Hindu
	Chakravarti, Pravat Chandra, MA, PhD	Lecturer, University College	Senate House	ditto
	Chakravarti, Samaresh, BSc ..	Jt Secretary, Light of Asia Insurance Co, Ld	4 & 5, Dalhousie Square ..	ditto
	Chakravarti, Satish Chandra, MA ..	Lecturer, University College	Senate House	ditto
	Chakravarti, Satish Chandra, BSC ..	Asstt Collector, Calcutta Corporation	Municipal Office	ditto
	Chakravarti, Sharat Chandra, BE ..	Executive Engineer, W W Department, Calcutta Corporation ..	Municipal Office	ditto
	Chakravarti, S K, BE	Director, S K Chakravarti, Ld	1-1A, Mission Row	ditto
	Chakravarti, Surendra Nath, MA ..	Lecturer, Sanskrit College	College Square	ditto
	Chakravarti, Tripurari, MA ..	Lecturer, University College	Senate House	ditto
	Chand, Phool	Welfare Officer, E B R	3, Kaylaghat Street	ditto
	Chand, Tara	Partner, Lal Chand & Sons	76, Lower Circular Road ..	ditto
	Chand, Tek	Partner, Lal Chand & Sons	76, Lower Circular Road ..	ditto
	Chanda, Apurba Kumar ..	Assistant Director of Public Instruction, Bengal	Writers' Buildings	ditto

Chattaraj, Baidyanath, BA	Accountant, E B R	3, Kaylaghat Street		ditto
Chattaraj, Durgagati, MA	Professor, Presidency College	86-1, College Street		ditto
Chatterji, A B	Organiser, Metropolitan Insurance Co, Ld	28, Pollock Street		ditto
Chatterji, Ahibhusan (Rai Sahib)	Stenographer & Sr Council Reporter	Writers' Buildings		ditto
Chatterji, Anath Bandhu	Superintendent, Council Section, Legislative Department, Bengal	Council House		ditto
Chatterji, Anil Chandra	Asstt. Manager, Scinda Steam Navigation Co, Ld	100, Clive Street		ditto
Chatterji, Asoke, MA	Assistant Editor, *The Modern Review*	120-2, Upper Circular Road		Brahmo
Chatterji, B	Accountant, Calcutta Mint	47, Strand Road		Hindu
Chatterji, B B	Assistant Resident Secretary, Manufacturers Life Insurance Co	27, Dalhousie Square		ditto
Chatterji, B B	Partner, K C Day & Co	4, Mission Row		ditto
Chatterji, Bankim Chandra, BA	Headmaster, Hare School	87, College Street		ditto
Chatterji, B C	Superintendent (Running), C M E's Office, E I R	E I R House		ditto
Chatterji, Bhupendra Nath	Landholder	41, Kailas Bose Street		ditto
Chatterji, Bidhubhusan (*Rai Sahib*)	Broker	33, Sikdarpara Street		ditto
Chatterji, Bijaya Ch	Auditor, Chief Auditor's Office, E I R	E I R House		ditto
Chatterji, Bimal Kumar, MSC	Lecturer, Scottish Church College	4, Cornwallis Square		ditto
Chatterji, Bipin Bihari	Buildings Surveyor, Calcutta Corporation	Municipal Office		ditto
Chatterji, B N	Treasurer, E I R	E I R House		ditto

No.	Names.	Style or calling.	Residence or place of business.	Religion.
	Chatterji, B N ..	.. Asstt. Engineer, Port Commissioner's Office	.. .. Strand Road ..	.. Hindu
	Chatterji, C B ..	.. Partner, P Chatterjee	.. .. 7, Garstins Place ..	.. ditto
	Chatterji, Charu Chandra	.. Railway Cashier, Martin & Co	.. .. 12, Mission Row ..	.. ditto
	Chatterji, Dasharathi, BL	.. Chief Manager, Tagore Raj Estate	.. .. Tagore Castle ..	.. ditto
	Chatterji, D N ..	.. Director, Associated Engineers, Ld	.. .. 14, Clive Street ..	.. ditto
	Chatterji, D P, B COM ..	.. Managing Director, Dairy Food Supply Co, Ld	.. .. Stephen House ..	.. ditto
	Chatterji, Durga Charan, MA PRS	.. Lecturer, Bethune College	.. .. 181, Cornwallis Street ..	.. ditto
	Chatterji, Dwarkanath ..	.. Junior Auditor, E B R	.. .. 3, Kaylaghat Street ..	.. ditto
	Chatterji, Gokul Chandra	.. Landholder	.. .. 41, Kailas Bose Street ..	.. ditto
	Chatterji, Gopal Chandra, BA	.. Accountant, Office of the Controller of Army Factory Accounts	6, Esplanade, East ..	.. ditto
	Chatterji, Haran Ch ..	.. Partner, N L Roy & Co	.. .. 7, Lyons Range ..	.. ditto
	Chatterji, Haran Chandra, BA	.. Assistant Manager, Longmans Green & Co, Ld	.. .. 6, Old Court House Street	.. ditto
	Chatterji, Haripada ..	.. Lower Limit Income-Tax Officer	.. .. 6, Esplanade East ..	.. ditto
	Chatterji, Hari Sadhan, MA, BL	.. Professor, Ripon College	.. .. 24, Harrison Road ..	.. ditto
	Chatterji, Hiralal, BE ..	.. Building Surveyor, Calcutta Corporation	.. .. Municipal Office ..	.. ditto
	Chatterji, I B ..	.. Agent, Longovica, Ld	.. .. 19, Strand Road ..	.. ditto
	Chatterji, Jyotish Chandra	.. Asstt. Account's Officer, E B R	.. .. 3, Kaylaghat Street ..	.. ditto
	Chatterji, Karunamaya ..	.. Merchant	.. .. 41, Kailas Bose Street ..	.. ditto

Chatterji, Kedar Nath, BSC	Assistant Editor, *The Modern Review*	..	120-2, Upper Circular Road	Brahmo
Chatterji, Kiran Chandra	Joint Manager, Sen & Pandit	..	Mercantile Buildings	Hindu
Chatterji, Kishori Mohan	Superintendent, Agent's Office, E I R	..	E I R House	ditto
Chatterji, K L	Director, Dairy Food Supply Co, Ld	..	Stephen House	ditto
Chatterji, Kshitish Chandra, MA	Lecturer, University College	..	Senate House	ditto
Chatterji, Kshitish Prasad, MA (Cantab.)	Education Officer, Calcutta Corporation	..	Municipal Office	ditto
Chatterji, Manatos	Asstt. Engineer, Port Commissioners' Office	..	Strand Road	ditto
Chatterji, Manindra Nath	Chief Clerk, C O S Office, E I R	..	E I R House	ditto
Chatterji, Monmohan	Professor, Presidency College	..	86-1, College Street	ditto
Chatterji, Nalini Kanta	Landholder	..	44, Amherst Street	ditto
Chatterji, Nalini Mohan, MA	Lecturer, University College	..	Senate House	ditto
Chatterji, Phani Bhusan	Professor, St. Paul's Cathedral College	..	33-1, Amherst Street	ditto
Chatterji, Phanibhusan, MA	Professor, City College	..	102-1, Amherst Street	ditto
Chatterji, Prabodh Chandra	Assistant Engineer, Calcutta Improvement Trust	..	5, Clive Street	ditto
Chatterji, Prabodh Chandra, MA, FCS (Lond).	Proprietor, Scientific Supplies (Bengal) Co	..	C37 & 38, College Street Market	ditto
Chatterji, Priyanath, MA	Professor, City College	..	102-1, Amherst Street	ditto
Chatterji, Rabindra Nath, MSC	P ofessor, Scottish Church College	..	4, Cornwallis Square	ditto

No.	Names.	Style or calling.	Residence or place of business.	Religion.
	Chatterji, Rajat Mohan ..	Landholder	47, Sankaritola East Lane	Hindu
	Chatterji, Ramesh Chandra, BSC ..	Manager, The Bengal Gold Works	12, Old Court House Lane	ditto
	Chatterji, S	General Manager, Aryan Assurance, Ld	7B, Mission Row	ditto
	Chatterji, S	Partner, P. Chatterjee	7, Garstin Place	ditto
	Chatterji, Santos Kumar ..	Merchant	41, Kailas Bose Street	ditto
	Chatterji, Satish Chandra, MA ..	Lecturer, University College	Senate House	ditto
	Chatterji, Shachindra Nath ..	Proprietor, Aryan Planter's Agency	3 & 4, Hare Street	ditto
	Chatterji, Shaileshwar	Asstt. Treasurer, C A O's Office, E I R	E I R House	ditto
	Chatterji, S N, MA	Assistant Accountant-General, Bengal	Treasury Buildings	ditto
	Chatterji, Somenath, BA ..	Collector, Calcutta Corporation	Municipal Office	ditto
	Chatterji, Sudhindra Nath, BA ..	Librarian, Commercial Library	1, Council House Street	ditto
	Chatterji, Sudhir Chandra, BA ..	Sub-Assessor, Calcutta Corporation	Municipal Office	ditto
	Chatterji, Sudin Chandra ..	Proprietor, The Bengal Gold Works	12, Old Court House Lane ..	ditto
	Chatterji, Suniti Kumar, MA, DLITT ..	Professor, University College	Senate House	ditto
	Chatterji, Suresh Chandra, BE ..	Ex-Engineer, Hijli Division P W D	Writers' Buildings	ditto
	Chaudhuri, Abdul Majid, BA ..	Head Assistant, Excise, Agri. and Ind. Dept, Bengal	Writers' Buildings	Mahomedan
	Chaudhuri, B N, BE	Assistant, S K Chakravarti, Ld	1-1A, Mission Row	Hindu
	Chaudhuri, Hemanga Nath ..	Assistant, Andrew Yule & Co, Ld	8, Clive Row	ditto

Chaudhuri, Jatindra Kishore, MA	Professor, Vidyasagar College	..	..	39, Shanker Ghose Lane ..	.. ditto
Chaudhuri, Kalyan Chandra, MA	Accounts Officer, E B R	..	..	3, Kaylaghat Street ..	.. ditto
Chaudhuri, Kshetra Mohan	Member, Association of Engineers	..	..	2, Royal Exchange Place	.. ditto
Chaudhuri, Kshitish Chandra	Landholder	..	..	20, Nimtala Ghat Street	.. ditto
Chaudhuri, Lokendra Nath	Cashier, Shaw Wallace & Co	..	..	4, Bankshall Street ..	.. ditto
Chaudhuri, N C	Landholder	..	..	20, Nimtala Ghat Street	.. ditto
Chaudhuri, P	Secretary, India Equitable Insurance Co, Ld	..	..	102, Clive Street ..	.. ditto
Chaudhuri, Prabhat Chandra	Merchant	..	..	23, Badur Bagan Lane ..	.. ditto
Chaudhuri, P N, MA, GDA	Proprietor, P. N Chaudhuri	..	..	17, Kanai Dhar Lane ..	.. ditto
Chaudhuri, Prafulla Chandra, MA, BL	Dy Chief Accounts Officer, E B R	..	..	3, Kaylaghat Street ..	.. ditto
Chaudhuri, Ramesh Chandra	Accountant, Office of the Controller of Army Factory Accounts			6, Esplanade, East ..	.. ditto
Chaudhuri, Rebati Ranjan	Auditor, Chief Auditor's Office, E I R	..	..	E I R House ..	.. ditto
Chaudhuri, Rohini Mohan, MA, PhD	Lecturer, University College	..	..	Senate House ..	.. ditto
Chaudhuri, Satya Prakash	Assistant Comml. Manager, E I R		..	E I R House ..	.. ditto
Chaudhiri, S C (Rai Bahadur)	Managing Agent, Bengal Luxmi Cotton Mills, Ld	..	..	28, Pollock Street ..	.. ditto
Chaudhuri, Shiva Kumar	Assistant, Anderson Wright & Co	..	..	22, Strand Road ..	.. ditto
Chaudhuri, Surendra Nath, MA	Manager, Zenith Life Insurance Co, Ld	..	..	Norton Buildings ..	.. ditto

No.	Names.	Style or calling.	Residence or place of business.	Religion.
	Chaudhuri, Suresh Chandra	Landholder	20, Nimtala Ghat Street	Hindu
	Chaudhuri, Upendra Mohan, BA	Proprietor, U M Chaudhuri & Co	12-1, Old Post Office Street	ditto
	Chellaraj, Benjamin Daniel	Professor, St. Paul's Cathedral College	33-1, Amherst Street	Christian
	Chhiba, Ramratan	Asstt Engineer, Bengal Telephone Corpn, Ld	1-2, Chittaranjan Avenue	Hindu
	Choksey, K P	Chief Electrical Engineer, C E S C, Ld	Victoria House	Zoroastrian
	Chunder, Joynarayan	Merchant	25, Bechu Chatterjee Street	Hindu
	D			
	Dalal, Ardeshir Rustomji, MA	Director, Tata Iron & Steel Co, Ld	100, Clive Street	Zoroastrian
	Dalmia, M	Assistant, Birla Bros, Ld	8, Royal Exchange Place	Hindu
	Darbari, Manekji Dadabhai, B COM, ASAA	Resident Partner, S B Billimoria & Co	100, Clive Street	Zoroastrian
	Das, Abanibhusan, MSC	Professor, City College	102-1, Amherst Street	Hindu
	Das, A N	Superintendent, Secretary's Office, Calcutta Corporation	Municipal Office	ditto
	Das, Bhupendra Chandra	Professor, Presidency College	86-1, College Street	ditto
	Das, Bhupendra Nath, MA	Lecturer, Scottish Church College	4, Cornwallis Square	Christian
	Das, H C, BA	Accountant	2-1, Mission Row	Hindu
	Das, Jogendra Kishore, MA	Manager, M Bhattacharya & Co	10, Bonfield Lane	ditto
	Das, Jyotish Chandra, BSC	Director, Calcutta Insurance, Ld	86, Clive Street	ditto

Das, K B, BE, CE	Engineer	79-20A, Lower Circular Road		ditto
Das, Krishnalal, MA	Superintendent, Commercial Intelligence Department	1, Council House Street		ditto
Das, M R	Assistant, Mackinnon Mackenzie & Co	16, Strand Road		ditto
Das, N R BSC (Glas)	Resident Engineer, Drainage, Calcutta Corporation	Hogg Street		ditto
Das, Pannalal	Sr Accountant, Accountant-General's Office, Bengal	Treasury Buildings		ditto
Das, Pratul Chandra	Assistant, Martin & Co	12, Mission Row		ditto
Das, Rabindra Nath, MSC	Demonstrator, Scottish Church College	4, Cornwallis Square		ditto
Das, Rash Bihari	Proprietor, Duncan & Co	5, Clive Ghat Street		ditto
Das, Rash Bihari	Sr Accountant, Accountant-General's Office, Bengal	Treasury Buildings		ditto
Das, R K	Assistant Engineer, K Roy & Brothers	6, Hastings Street		ditto
Das, Saroj Kumar, MA, PHD	Lecturer, University College	Senate House		Brahmo
Das, Shrish Chandra	Assistant, 2nd Grade, Imperial Bank of India	8, Clive Street		Hindu
Das, S L	Deputy Secretary, Port Commissioners' Office	Strand Road		ditto
Das Gupta, A C, BA, GDA	Accountant	12, Old Post Office Street		ditto
Das Gupta, Amar Prasad, MA Phd	Lecturer, University College	Senate House		ditto
Das Gupta, Annada Prasad, MA, BL	Senior Teacher, Keshab Academy	148, Manicktala Street		ditto
Das Gupta, Anutos	Professor, Bangabasi College	25-1, Scott Lane		ditto
Das, Gupta, Arunendra, MA	Professor, Vidyasagar College	39, Shankar Ghose Lane		ditto
Das Gupta, Ashutos, BE	Engineer, Bhattacharjee & Co	28, Pollock Street		ditto
Das Gupta, Atul Chandra, MA	Professor, Vidyasagar College	39, Shankar Ghose Lane		ditto

No.	Names.	Style or calling.	Residence or place of business.	Religion.
	Das Gupta, B N, BSEE (USA)	Managing Director, Indo-Swiss Trading Co, Ld	28, Pollock Street	Hindu
	Das Gupta, H K	Professor, St. Paul's Cathedral College	33-1, Amherst Street	Christian
	Das Gupta, Jitendra Nath	Assistant Engineer, Calcutta Improvement Trust	5, Clive Street	Hindu
	Das Gupta, Jnanendra Mohan, MSC	Chemist	82-3A, Cornwallis Street	ditto
	Das Gupta, Rajendra Nath	Joint Manager, Sen & Pandit	Mercantile Buildings	ditto
	Das Gupta, Rajendra Nath	Professor, Bangabasi College	25-1, Scott Lane	ditto
	Das Gupta, S N	Director, Indo-Swiss Trading Co, Ld	28, Pollock Street	ditto
	Das Gupta, S R (Dr), MSC	Professor, Islamia College	8, Wellesley Street	ditto
	Das Gupta, Sadhir Kumar, MA	Professor, Scottish Church College	4, Cornwallis Square	ditto
	Das Gupta, Sukumar	Head Assistant, Bengal Secretariat, P W D	Writers' Buildings	Brahmo
	Das Gupta, Surendra Nath, MA, PhD	Principal, Sanskrit College	College Square	Hindu
	Das Gupta, Tamonash Chandra, MA, Phd	Lecturer, University College	Senate House	ditto
	Datta-Gupta, Sharat Kumar, MA, MBE	Chief Account's Officer, E B R	3, Kaylaghat Street	ditto
	Davar, M S	Indorporated Accountant, S R Batliboi & Co	1-B, Old Post Office Street	ditto
	Daver, L S, AMIE (India)	Proprietor, L S Daver & Co	1 & 2, Old Court House Corner	ditto
	De, B N, DSC (Eng)	Chief Engineer, Calcutta Corporation	Municipal Office	ditto
	De, Charu Chandra, BSC, BE	Engineer	8-2 Hastings Street	ditto

De, Haraprasad, MSc, PRS	Professor, Vidyasagar College	39, Shankar Ghose Lane		Hindu
De, Gour Mohan, MSc	Chemist, Dey & Co	41-B, Clive Street		ditto
De, Jugal Kishore	Proprietor, Dey & Co	41-B, Clive Street		ditto
De, Kali Charan, BSc (Glasgow)	District Controller of Stores, E I R	E I R House		ditto
De, K L, MSc (Cal) BSc (Edin)	Engr Supervisor, Calcutta Corporation, Dist III	Hogg Street		ditto
De, Mukulchandra, ARCA (Lond)	Principal, Government School of Art	28, Chowringhee		ditto
De, Phanindra Lal (*Rai Bahadur*)	Merchant and Landholder	99, Grey Street		ditto
De, Pravas Chandra, MA, BL	Partner, The Mercantile Syndicate	7-B, Clive Row		ditto
De, Ranikanta, MA, BSc	Professor, Scottish Church College	4, Cornwallis Square		ditto
De, Satyendra Nath, MSc	Director, Overland Import & Export House (1930), Ld	5, Royal Exchange Place		ditto
De, Satya Narain	Partner, D N Bose & Co	12, Kalidas Sinha Lane		ditto
De, Subodh Kumar, MA	Lecturer, Scottish Church College	4, Cornwallis Square		ditto
De, Sudhirendra Nath	Landholder	42, Pathuriaghata Street		ditto
De, Sudhir Chandra, BA	Landholder	18, Hartaki Bagan Lane		ditto
De, Surendra Nath, BA	Sub-Assesor, Calcutta Corporation	Municipal Office		ditto
De, Surendra Nath, MA	Sr Accountant, Accountant-General's Office, Bengal	Treasury Buildings		ditto
De, Tulsi Das	Manager, Bengal Provincial Co-operative Bank, Ld	Writers' Buildings		ditto

No.	Names.	Style or calling.	Residence or place of business.	Religion.
	Deb, Keshab Lal	Asstt Manager (Photo), Surveyor-General's Office ..	.. 14, Wood Street	Hindu
	Deb, N C	Accounts Officer, E I R ..	.. E I R House	ditto
	Deb, Prafulla Krishna (Kumar Bahadur)	Landholder ..	.. 106-1, Grey Street	ditto
	Deb, Pramode Krishna	Landholder ..	.. 106-1, Grey Street	ditto
	Deb, Prasanna Kumar, MA, BT ..	Head Master, Calcutta Training School ..	.. 8, European Asylum Lane ..	ditto
	De Dhara, Gobinda Kishore, MA ..	Superintendent, C D, Central Bank of India, Ld ..	.. 100, Clive Street	ditto
	Deo, Ranganath, BSc	Senior Chemist, Paterson Engineering Co, (India) Ld	.. 2, Dalhousie Square	ditto
	De Sarkar, Haricharan	Zamindar ..	.. 12, Srinath Das Lane	ditto
	De Sarkar, Krishna Gopal ..	Partner, A B Patrika, Ld ..	.. 2, Ananda Chatterjee Lane ..	ditto
	De Sarkar, Nirmal Chandra, BA (Glas)	Zamindar ..	.. 12, Sreenath Das Lane	ditto
	Devitre, Pheroze G, BA	Branch Secretary, Central Bank of India, Ld ..	.. 100, Clive Street	Zoroastrian
	Dhar, A C, BSc, BE	Engineer ..	.. 119-3, Shambazar Street	Hindu
	Dhar, K L	Assistant (2nd Grade), Imperial Bank of India	.. Strand Road	ditto
	Dhar, Ramani Ranjan	Assistant, Martin & Co	.. 12, Mission Row	ditto
	Dhar, S P, BSc (Glas)	Engineer and Valuer ..	.. 9, Old Post Office Street ..	ditto
	Dhara, Gunamaya	Head Assistant, Surveyor-General's Office ..	.. 13, Wood Street	ditto
	Dikshit, K N. MA	Superintendent, Archœological Survey of India, in charge Eastern Circle.	6, Esplanade, East	ditto

Dinshaw, Ardeshir, BE	Engineer ..	.. 10, Government Place ..	..	Zoroastrian
Doshi, Bhaichand Jagjiban ..	Salesman, Ralph Paxton ..	.. 10, Lall Bazar ..	..	Hindu
Driver, Darab Cursetji, MA (Cantab)	Assistant, Tata Iron & Steel Co, Ld ..	.. 100, Clive Street ..	..	Zoroastrian
Durai, K	Tract Supply Officer, E I R ..	.. E I R House ..	..	Hindu
Dutt, A K, BE, CE	Engineer ..	.. 5, Hastings Street ..	..	ditto
Dutt, Ananta Krishna, BE ..	Member, Association of Engineers ..	.. 2, Royal Exchange Place	..	ditto
Dutt, Anupam Chandra ..	Accountant, Office of the Controller of Army Factory Accounts	6, Esplanade East ..	..	ditto
Dutt, Atulananda	Partner, *Amrita Bazar Patrika*, Ld ..	.. 2, Ananda Chatterjee Lane	..	ditto
Dutt, B C, MSc	Partner, Indo-Trading Co ..	.. 20, Strand Road ..	..	ditto
Dutt, Binode Bihari, MA, BL, PhD ..	Assistant Controller, Calcutta University ..	.. Senate House ..	..	ditto
Dutt, Birendra Nath, BSc ..	Assistant Controller of Inspection, Indian Stores Department ..	6, Esplanade, East ..	..	ditto
Dutt, C C	Landholder ..	.. 1, Pataldanga Street ..	..	ditto
Dutt, Harnam Das	Auditor, Chief Auditor's Office, E I R ..	.. E I R House ..	..	ditto
Dutt, Jamini Kumar	P A to Chief Engineer, Calcutta Corporation ..	.. Municipal Office ..	..	ditto
Dutt, Jatindra Krishna ..	Head Salesman, John Dickinson & Co, Ld ..	.. Grosvenor House ..	..	ditto
Dutt, Jyotish Chandra	Bullion Keeper, Calcutta Mint ..	.. 47, Strand Road ..	..	ditto
Dutt, K C	Assistant Registrar of Joint Stock Companies ..	.. Treasury Buildings ..	..	ditto
Dutt, Kula Chandra	Partner, Dutt & Brothers ..	.. 16, Chittaranjan Avenue (South) ..		ditto

No.	Names.	Style or calling.	Residence or place of business.	Religion.
	Dutt, Lalita Prasad ..	.. Keeper of Records, Bengal Secretariat ..	.. Writers' Buildings ..	.. Hindu
	Dutt, M ..	.. Chief Agent, United India Life Assurance Co, Ld ..	.. 2, Lyons Range ..	.. ditto
	Dutt, Manamohan, BA ..	.. Accountant, Calcutta Corporation, Dist II ..	.. 22, Mirzapur Street ..	.. ditto
	Datt, M N, AMIE ..	.. Engineer ..	.. 6, Old Post Office Street..	.. ditto
	Dutt, Nalinaksa, MA, PhD	.. Lecturer, University College ..	.. Senate House ..	.. ditto
	Dutt, Nihar Chandra, BA	.. Landholder ..	.. 8, College Square ..	.. ditto
	Dutt, Nripendra Kumar, MA, PhD	.. Professor, Sanskrit College ..	.. College Square ..	.. ditto
	Dutt, P N ..	.. Assistant Manager, Robert Ingham Clark & Co, Ld ..	.. 2, Clive Row ..	.. ditto
	Dutt, Radharaman, BE ..	.. Insecure Building Inspector, Calcutta Corporation	.. Municipal Office ..	.. ditto
	Dutt, Rasik Lal, DSc ..	.. Industrial Chemist, Bengal ..	.. 40-1A, Free School Street	.. ditto
	Dutt, Sanyasi Das, BSc, BL	.. Lower Limit Income-Tax Officer ..	.. 6, Esplanade, East ..	.. ditto
	Dutt, S C, BA, FCI (Birm), GDA	.. Accountant and Auditor ..	.. 31, Guruprasad Chaudhuri Lane	.. ditto
	Dutt, S C ..	.. Dy Bullion Keeper, Calcutta Mint ..	.. 47, Strand Road ..	.. ditto
	Dutt, S C ..	.. Professor, St Paul's Cathedral College ..	.. 33-1, Amherst Street ..	.. ditto
	Dutt, Shishir K ..	.. Chief Agent, Gresham Life Assurance Society, Ld ..	.. 8, Dalhousie Square, East	.. Brahmo
	Dutt, S K ..	.. Secretary, Bengal Immunity Co, Ld ..	.. 153, Dharamtala Street ..	.. Hindu
	Dutt, Snehamoy, MSc (Cal)	.. Professor, Presidency College ..	.. 86-1, College Street ..	.. ditto
	Dutt, Sudhindra Nath, BA	.. Secretary, Light of Asia Insurance Co, Ld ..	.. 4 & 5, Dalhousie Square	.. ditto
	Dutt, Surendra Nath ..	.. Controller, Calcutta Insurance, Ld ..	.. 86, Clive Street ..	.. ditto
	Dutt, Sushil Chandra, MA, BL	.. Professor, Scottish Church College ..	.. 4, Cornwallis Square ..	.. Christian

Dutt, Tarapada, BE	Examiner of Patents	1, Council House Street		Hindu
Dutt, Tulsidas	Chief Clerk, Stores Dept, E B R	3, Kaylaghat Street		ditto

G

Ganguli, Bhupendra Nath, MA	Sub-Assessor, Calcutta Corporation	Municipal Office		Hindu
Ganguli, D N, BE	Deputy Assessor, Calcutta Corporation	Municipal Office		ditto
Ganguli, Harendra Nath	Asstt Superintendent, C O S Office, E I R	E I R House		ditto
Ganguli, H S	Asstt Engineer, Canals Dvn	Treasury Buildings		ditto
Ganguli, Indu Bhusan	Superintenddnt, Secretary's Dept, Calcutta Corporation	Municipal Office		ditto
Ganguli, J, BE, AMIE	Engineer	6, Hastings Street		ditto
Ganguli, Janakai Nath, MA	Sr Accountant, Accountant-General's Office, Bengal	Treasury Buildings		ditto
Ganguli, Jatindra Mohan, BA	Head Assistant, Agri & Industries Deptt, Bengal	Writers' Buildings		ditto
Ganguli, Jnanada Kanta, MA	Professor, Vidyasagar College	39, Shankar Ghose Lane		ditto
Ganguli, Mohan Lal, MSc	Lecturer, University College	Senate House		ditto
Ganguli, Nihar Prakash	Landholder	12, Prasanna Kumar Tagore Street		ditto
Ganguli, P D	Partner, Universal Trading Co	33, Canning Street		ditto
Ganguli, Provas Chandra, MSc	Lecturer, Ripon College	24, Harrison Road		ditto
Ganguli, Sitakanta	Asstt Engineer, City Division, P W D	Writers' Buildings		ditto
Ganguli, Surendra Mohan, DSc	Lecturer, University College	Senate House		ditto

No.	Names.	Style or calling.	Residence or place of business.	Religion.
	Ghatak, Atul Chandra, MA	Superintendent, University Press	Senate House	Hindu
	Ghosal, Sanat Kumar	Landholder	3-2A, Nalin Sircar Street	ditto
	Ghosal, Shailendra Nath, MA	Dy License Officer, Calcutta Corporation	Municipal Office	ditto
	Ghosal, Upendra Nath, MA, PhD (No I)	Professor, Presidency College	86-1, College Street	ditto
	Ghosal, Upendra Nath (No. II)	Professor, Presidency College	86-1, College Street	ditto
	Ghose, A C	Eastern Group Manager, Brooke Bond India, Ld	2, Metcalfe Street	ditto
	Ghose, Ajaya Krishna	Landholder	62-7, Beadon Street	ditto
	Ghose, Amarendra Nath	Partner, Calcutta Glass Stores	3, Royal Exchange Place	ditto
	Ghose, Ambika Charan, MAS, MRAS	Manager, A C Ghose & Son	97, Clive Street	ditto
	Ghose, Amritalal, MA, BL	Lecturer, City College	102 1, Amherst Street	ditto
	Ghose, Amulya Chandra	Chief Clerk & Accountant, Royal Insurance Co, Ld	26 & 27, Dalhousie Square	ditto
	Ghose, Amulya Charan	Professor, Vidyasagar College	39, Shanker Ghose Lane	ditto
	Ghose, B B, MSC	Assistant Accountant-General, Bengal	Treasury Buildings	ditto
	Ghose, Bibhas Kumar, BE	Engineer, Bhattacharjee & Co	28, Pollock Straet	ditto
	Ghose, Bijan Kanti, BA	Manager, *Amrita Bazar Patrika*, Ld	2, Ananda Chatterjee Lane	ditto
	Ghose, Chandra Kumar	Buildings Surveyor, Calcutta Corporation	Municipal Office	ditto
	Ghose, D (Rai Sahib)	Offg Assistant Personal Officer (Traffic)	3, Kaylaghat Street	ditto

Ghose, Debendra Nath (II)	..	Sr Accountant, A G's Office, Bengal	..	.. Treausury Buildings	.. .. ditto
Ghose, Dhirendra Nath	..	Accountant, Office of the Controller of Army Factory Accounts	..	6, Esplanade, East	.. .. ditto
Ghose, Dhiresh Chand	..	Partner, Calcutta Glass Stores	..	.. 3, Royal Exchange Place	.. ditto
Ghose, G K	..	Sr Accountant, A G's Office, Bengal	..	.. Treasury Buildings	.. .. ditto
Ghose, Harendra Lal	..	Landholder	..	.. 30-1, Madan Baral Lane	.. ditto
Ghose, Hirendranath, BE	..	Examiner of Patents	..	.. 1, Council House Street	.. ditto
Ghose, H N, MA, BL	..	Representative Macmillan & Co, Ld	..	.. 294, Bowbazar Street	.. .. ditto
Ghose, Jatindra Nath, BA	..	Accountant, Office of the Controller of Army Factory Accounts		6, Esplanade, East	.. .. ditto
Ghose, Jitendra Nath, BL	..	Director, Unique Assurance Co, Ld	..	.. 6, Hare Street	.. .. ditto
Ghose, Jitendra Nath, BL	..	Lower Limit Income Tax Officer	..	.. 1, Hare Street	.. .. ditto
Ghose, Jyotirmaya	..	Professor, Presidency College	..	.. 86-1, College Street	.. .. ditto
Ghose, K	..	Editor and Manager, *Calcutta Commercial Gazette*	..	.. 5, Pollock Street	.. .. ditto
Ghose, Kamini Kumar, MA, BT	..	Head Master, Ripon Collegiate School	..	.. 24, Harrison Road	.. .. ditto
Ghose, Kashinath	..	Subdivisional Officer, Stores Subdivision, Dredger Divn		.. 3, Charnock Place	.. .. ditto
Ghose, Khagendra Ch, MA, BL	..	Officer, Hindusthan Co-operative Insurance Society, Ld		.. Hindusthan Buildings	.. .. ditto
Ghose, Mahindra Nath	..	Supervisor, Engineering Dept, Drainage, Calcutta Corporation		.. Municipal Office	.. .. ditto
Ghose, M N, MCE	..	Managing Proprietor, Oriental Machinery Supplying Agency, Ld		20-1, Lall Bazar Street	.. .. ditto
Ghose, Mohit Mohan, MSC	..	Lecturer, University College	..	. Senate House	.. .. ditto

No.	Names.	Style or calling.	Residence or place of business.	Religion.
	Ghose, Narendra Krishna ..	Zamindar ..	.. 1, Jorabagan Street ..	.. Hindu
	Ghose, Naresh Chandra	Professor, Presidency College ..	.. 86-1, College Street ..	.. ditto
	Ghose, Nirad Bihari	Landholder ..	.. 13, Nayanchand Dutt Street ..	ditto
	Ghose, Niranjan	Secretary, National Council, Y M C A ..	.. 5, Russell Street ..	.. ditto
	Ghose, Nirmal Chandra	Zamindar ..	.. 2, Loudon Street ..	.. ditto
	Ghose, Pabitra Kumar, BSc ..	Incorporated Accountant, P K Ghose & Co ..	.. 100, Clive Street ..	.. ditto
	Ghose, Panchanan	Subdivisional Officer, Govt House, Calcutta ..	.. Government House ..	.. ditto
	Ghose, Pashupati Nath	Landholder ..	.. 7 & 8, Rasik Lal Ghose Lane ..	ditto
	Ghose, P C, BA	Partner, D N Bose & Co ..	.. 12, Kalidas Sinha Lane ..	.. ditto
	Ghose, Phanindra Nath, MA, PhD, DSc	Professor, University College ..	.. 92, Upper Circular Road ..	.. ditto
	Ghose, Prafulla Chandra, MA ..	Professor, Presidency College ..	.. 86-1, College Street ..	.. ditto
	Ghose, Prafulla Chandra, MA, BSc ..	Lecturer, University College ..	.. Senate House ..	.. ditto
	Ghose, Puridas, BE	Assistant Resident Engineer, W W Extension, Calcutta Corporation	Municipal Office ..	.. ditto
	Ghose, Rabindra Narayan, MA ..	Principal, Ripon College ..	.. 24, Harrison Road ..	.. ditto
	Ghose, Rajendra Krishna ..	Zamindar ..	.. 1, Jorabagan Street ..	.. ditto
	Ghose, Rashbehari	Merchant ..	.. 9, Clive Row ..	.. ditto
	Ghose, Saral Chandra	Assistant, Mackinnon, Mackenzie & Co ..	.. 16, Strand Road ..	.. ditto
	Ghose, Satish Chandra, MA ..	Lecturer, University College ..	.. Senate House ..	.. ditto

Ghose, Satyendra Nath, MSc	..	Sub-Assessor, Calcutta Corporation	..	Municipal Office	ditto
Ghose, S C	..	Partner, Universal Trading Co	..	33, Canning Street	ditto
Ghose, S C	..	Agency Superintendent, National Indian Life Insurance Co, Ld		12, Misson Row	ditto
Ghose, S C	..	Estate Superintendent, Port Commissioners' Office	..	Strand Road	ditto
Ghose, Shanti Kumar, BE	..	Building Surveyor, Calcutta Corporation	..	Municipal Office	ditto
Ghose, Sharat Chandra	..	General Manager, Calcutta Industrial Syndicate	..	15, College Square	ditto
Ghose, Sharat Chandra, MA	..	Organizing Manager, Zenith Life Assurance Co, Ld	..	Norton Buildings	ditto
Ghose, Sharat Chandra, BA	..	Proprietor, Dwarkin & Son	..	12, Esplanade, East	ditto
Ghose, Shiva Prasanna	..	Zamindar	..	75, Beadon Street	ditto
Ghose, Shuddhodan, DSc	..	Lecturer, University College	..	92, Upper Circular Road	ditto
Ghose, Siddheswar	..	Sr Accountant, Accountant-General's Office, Bengal		Treasury Buildings	ditto
Ghose, S K, A SA A, RA	..	Accountant	..	4, Hastings Street	ditto
Ghose, S M	..	Builder & Contractor	..	57, Chittaranjan Avenue, South	ditto
Ghose, S N	..	Electrical Engineer	..	52-3A, Sukea Street	ditto
Ghose, Subodh Chandra	..	Assistant Engineer, Public Health Department, Bengal	..	3, Charnock Place	ditto
Ghose, Subodh Chandra, BSc, BE	..	Distt Engineer, Calcutta Corporation, Distt II	..	22, Mirzapore Street	ditto
Ghose, Subodh Chandra	..	Electrical Engineer, Universal Trading Union	..	9, Dalhousie Square, East	ditto
Ghose, Suhrid Kumar	..	Assistant Assessor, Calcutta Corporation	..	Municipal Office	ditto
Ghose, Sukhendra Nath, BA	..	Executive Engineer, Public Health Department, Bengal	..	3, Charnock Place	ditto
Ghose, Sunil Kanti	..	Partner, *Amrita Bazar Patrika*, Ld	..	2, Ananda Chatterjee Lane	ditto
Ghose, Surendra Mohan	..	Landholder	..	52-3A, Sukea Street	ditto

No.	Names.	Style or calling.	Residence or place of business.	Religion.
	Ghose, Suresh Chandra, MA ..	Lecturer, City College ..	.. 102-1, Amherst Street ..	.. Hindu
	Ghose, Sushil Chandra ..	Managing Partner, Universal Trading Co ..	.. 33, Canning Street ..	.. ditto
	Ghose, Tara Prasanna ..	Shroff, Mercantile Bank of India, Ld .	.. 8, Clive Street ..	.. ditto
	Ghose, Tarun Kumar, BSC ..	Partner, Ghose & Saha	.. 1-B, Old Post Office Street	.. ditto
	Ghose, Tushar Kanti ..	Editor, *Amrita Bazar Patrika*, Ld ..	.. 2, Ananda Chatterjee Lane	.. ditto
	Ghose, Upendra Nath, MA (Rai Sahib)	Deputy Assistant Controller of Army Factory Accounts	.. 6, Esplanade, East ..	.. ditto
	Ghose, Dastidar, J C ..	Chief Agent, Bombay Mutual Life Assurance Society, Ld	.. 100, Clive Street ..	.. ditto
	Ghuznavi, B K ..	Zamindar and Merchant ..	.. 19, Strand Road ..	.. Mahomedan
	Ghuznavi, Ishkander, BSC ..	Landholder ..	.. 1, Theatre Road ..	.. ditto
	Gidwani, Tularam Udharam ..	Asstt Manager, J B Advani & Co, Ld ..	.. 14-4, Old China Bazar Street	.. Hindu
	Goswami, Mahendra Nath, Dr, MA ..	Lecturer, University College ..	.. 92, Upper Circular Road	.. ditto
	Goswami, Pramatha Nath ..	Professor, Bangabasi College ..	.. 25-1, Scott Lane ..	.. ditto
	Guha, Bipin Bihari, MA ..	Lecturer, City College ..	.. 102-1, Amherst Street ..	.. ditto
	Guha, Jitesh Chandra, MA, BL ..	Professor, Vidyasagar College ..	.. 39, Sanker Ghose Lane ..	.. ditto
	Guha, Jnanendra Chandra (Rai Sahib)	Personal Assistant to the Inspector-General of Prisons, Bengal ..	Writers' Buildings ..	.. ditto
	Guha, Rajendra Nath, BA ..	Asstt Collector, Calcutta Corporation ..	.. Municipal Office ..	.. ditto
	Guha, S P	Chief Agent, Bombay Mutual Life Assurance Society, Ld	.. 100, Clive Street ..	.. ditto
	Guha Thakurta, Sudhansu Kumar, MA	Prpfessor, Islamia College ..	.. 8, Wellesley Street ..	.. ditto
	Guin, N K ..	Professor, St. Paul's Cathedral College ..	.. 33-1, Amherst Street ..	.. Christian
	Gupta, A K ..	Distt Traffic Superintendent, E B R ..	.. 3, Kaylaghat Street ..	.. Hindu

Gupta, Amarnath	Assistant, Andrew Yule & Co, Ld	8, Clive Row		ditto
Gupta, Amrita Lal, MA	Lecturer, Bethune College	181, Cornwallis Street		ditto
Gupta, Debaprasad, MA, BL	Landholder	5, Middleton Street		ditto
Gupta, G C	Landholder	5, Middleton Street		ditto
Gupta, Hrisikesh	Landholder	7, Goopto Lane		ditto
Gupta, K C	Principal, Vidyasagar College	39, Sankar Ghose Lane		ditto
Gupta, L K	Assistant, McLeod & Co	28, Dalhousie Square		ditto
Gupta, Manaranjan, MSC	Lecturer, University College	Senate House		ditto
Gupta, Naresh Chandra	Director, S C Sons, Ld	14, Clive Street		ditto
Gupta, Paresh Chandra	Superintendent W W Dept, Calcutta Corporation	Municipal Office		ditto
Gupta, P B	2nd Pasing Officer, Imperial Bank of India	Strand Road		ditto
Gupta, Premananda	Assistant, Martin & Co	12, Mission Row		Brahmo
Gupta, Ramaprasad	Landholder	7, Middleton Street		Hindu
Gupta, Rebatimohan, BE	Resident Engineer, W W Extension, Calcutta Corporation	Municipal Office		ditto
Gupta, Samirendra Nath	Assistant, Bengal Iron Co, Ld	4, Lyons Range		ditto
Gupta, Shailesh Chandra, BA	Director, S C Sons, Ld	14, Clive Street		ditto
Gupta, S P, MSC	Landholder	5, Middleton Street		ditto
Gupta, Sudhir Kumar, BA	Assistant, Martin & Co	12, Mission Row		ditto
Gupta, Surendra Nath	Local Secretary, North British & Mercantile Insurance Co	101-1, Clive Street		Brahmo
Guzdar, K M	Partner, P M Guzdar & Co	43, Ezra Street		Hindu
Guzdar, N M	Partner, P M Guzdar & Co	43, Ezra Street		ditto
Guzdar, P M	Partner, P M Guzdar & Co	43, Ezra Street		ditto

No.	Names.	Style or calling.	Residence or place of business.	Religion.
	H			
	Haidar, Kamaruddin (Nawabzada) BA	Zamindar	95-E, Central Avenue	Mahomedan
	Hakim, Ata-ul, MA	Professor, Islamia College	8, Wellesley Street	ditto
	Hakim, Razaul, MA, BL	Industrial Surveyor, Bengal	40-1A, Free School Street	ditto
	Haldar, S, BSC	A T S, E B R	3, Kaylaghat Street	Hindu
	Haridas, Anandji	Managing Director, Anandji Haridas & Co, Ld	1, Meerbohar Ghat	ditto
	Hashim, M	Attached Officer, C A's Office, E I R	E I R House	Mahomedan
	Hedayetullah, Syed, M SC, PH D	Lecturer, University College	92, Upper Circular Road	ditto
	Home, Amal	Editor, *Calcutta Municipal Gazette*	Municipal Office	Hindu
	Hossain, Altaf, MA	Professor, Islamia College	8, Wellesley Street	Mahomedan
	Hossain, Attar, BA	Sub-Assessor, Calcutta Corporation	Municipal Office	ditto
	Hossain, S M Moazzem, MA	Sub-Assessor, Calcutta Corporation	Municipal Office	ditto
	Hui, J C	Director, Indo-Swiss Trading Co, Ld	28, Pollock Street	Hindu
	Huq, Aminul (Maulvi), BA	Head Assistant, Bengal Secretariat, Judicial Department	Writers' Buildings	Mahomedan
	Huq, A N M Serajul, BA	Lower Limit Income Tax Officer	6, Esplanade, East	ditto
	Huq, Mahfuzul	Professor, Presidency College	86-1, College Street	ditto
	Huq, Mahammad Fazlul, BA	Head Assistant, Bengal Secretariat, Education Department	Writers' Buildings	ditto
	Huq, N	Personal Assistant to the Inspector-General of Registration, Bengal	Writers' Buildings	ditto

Ishaque, M D (Maulvi), MA, PhD	Lecturer, University College	Senate House	Mahomedan	
Islam, Md Zahurul (Maulvi), MA	Professor, Islamia College	8, Wellesley Street	ditto	
Iyer, C Venkatarama, BA	P W Sr Accountant, A G's office, Bengal	Treasury Buildings	Hindu.	
Iyer, E R Seshu	Dy C A O, E I R	E I R House	ditto	
Iyer, Subraya Rama	Branch Manager, Govan Bros Ld	20, Park Street	ditto	
Jajharia, R D	Managing Director, Shree Radhakrishna Sugar Mills, Ld	138, Harrison Road	Hindu	
Jalan, J	Assistant, Birla Bros, Ld	8, Royal Exchange Place	ditto	
Jatia, Champalal	Landholder and Merchant	21, Rupchand Roy Street	ditto	
Jatia, Kanailal	Landholder and Merchant	21, Rupchand Roy Street	ditto	
Jubbar, Abdul (Maulvi)	Head Assistant, Bengal Secretariat, Jails Branch	Writers' Buildings	Mahomedan	

K

Kabir, Humayun Z A, MA, BA (Oxon)	Lecturer, Calcutta University	Senate House	Mahomedan	
Kadir, Aga F M Abdul (Maulvi), MA	Professor, Islamia College	8, Wellesley Street	ditto	
Kanoriya, G	Assistant, Birla Bros, Ld	8, Royal Exchange Place	Hindu	
Kanoriya, J P	Assistant, Birla Bros, Ld	8, Royal Exchange Place	ditto	
Kanoriya, Ramnath	Merchant	29, Banstolla Street	ditto	

No.	Names.	Style or calling.	Residence or place of business.	Religion.
	Kapoor, Brej Bihari Lal ..	Sub-Accountant, National City Bank of New York	4, Clive Street	Hindu
	Kar, Karuna Kishore, BL	Managing Director, Unique Assurance Co, Ld	10, Canning Street	ditto
	Karforma, Narendra Kumar, MA	Professor, Scottish Church College	4, Cornwallis Square	ditto
	Karmally, H	Manager, Adamjee Hajee Dawood & Co, Ld	4, Dalhousie Square, East	Mahomedan
	Khaitan, Gouriprasad	Proprietor, Khaitan Sons & Co	43, Zakaria Street	Hindu
	Khambata, Framroze Merwanji	Manager, Polson Manufacturing & Co	44, Dharamtala Street	Zoroastrian
	Khan, Abdul Latiff (Khan Bahadur)	Personal Assistant to Director of Public Instruction, Bengal	Writers' Buildings	Mahomedan
	Khan, Nisar Ahmed	Accountant, Office of the Controller of Army Factory Accounts	6, Esplanade, East	ditto
	Khan, Samsamuddin, BA	Secretary, Young Muslim Literary Club	Collin Lane	ditto
	Khan, Syeduddin	Head Assistant, Bengal Secretariat, P W D	Writers' Buildings	ditto
	Khandelwal, Kedarnath, BA, LLB	Partner, Narayandas Khandelwal & Co	11A, Radha Bazar Lane	Hindu
	Khanna, Roshanlal	Assistant, Andrew Yule & Co, Ld	8, Clive Row	ditto
	Khettry, Lakshmi Narayan	Merchant & Landholder	44, Manicktalla Street	ditto
	Khondkar, Johadar Rahim	Chief Clerk, Ericsson Telephone, Ld	21, Old Court House Street	ditto
	Khondkar, Sultan Ahmed, MA	Additional Income Tax Officer	6, Esplanade, East	Mahomedan
	Khuda, Quadrati (Dr)	Professor, Presidency College	86-1, College Street	ditto
	Kotval, Shantaram Balkrishna, BA	Secretary, Shree Radhakrishna Sugar Mills, Ld	138, Harrison Road	Hindu

Krishnan, Kariamanikkam Srinivasa, DSC.	Professor, Indian Asciation for the the cultivation of Science ..	210, Bowbazar Street	ditto
Krishnaswami, V S, BA	Assistant Accounts Officer, E B R	3, Kaylaghat Street	ditto
Kulkarni, Haramba Suryanarayan ..	Engineer, English Electric Co, Ld	D-4, Clive Buildings	ditto
Kumar, Kumar Krishna, MA ..	Partner, Sitalprasad Kharagprasad	31, Burtolla Street	ditto
Kumar, Kali Kumar, MSC ..	Lecturer, University College	92, Upper Circular Road ..	ditto
Kumar, Lalit Mohan	Assistant Traffic Manager, Bengal Telephone Corporation, Ld ..	8, Hare Street	ditto
Kumar, Prakash Chandra, BSC ..	Partner, Eastern Shipping Agency	8, Dalhousie Square, East ..	ditto
Kumar, Pravat Chandra ..	Manager, Eastern Shipping Agency	8, Dalhousie Square, East ..	ditto
Kumar, Surendra Nath ..	Superintendent, Reading-rooms, Imperial Library	6, Esplanade, East	ditto
Kundu, A C ..	Managing Director, Coral Engineering Works, Ld	5, Weston Street	ditto
Kundu, Suresh Chandra, BA ..	Head Master, Town School	Shampukur Street	ditto
Kunhappa, M, BA	Accountant, E B R	3, Kaylaghat Street	ditto
L			
Laha, Shashanka Shekhar, BA ..	Proprietor, Laha Ganguly, & Co	18, Raja Woodmunt Street ..	Hindu
Laharry, N C	Manager, Metro-Goldwen-Mayer (India), Ld	P-98E, Central Avenue	ditto
Lahiri, Jagadindra Nath	Manager and Secretary, Bengal Chemical and Pharmaceutical Works, Ld.	31, Chittaranjan Avenue, South ..	ditto
Lahiri, Kalipada, MSC	Accountant, Accountant-General's Office, Bengal	Treasury Buildings	ditto
Lahiri, R K	Assistant Superintendent, Jetties, Port Commissioners' Office ..	Strand Road	ditto
Lal, Behari	Auditor, Chief Auditor's Office, E I R	E I R House	ditto

No:	Name.	Style of calling.	Residence or place of business.	Religion:
	Lala, Shib Narayan, AISA (Lon) ..	Professor, Scottish Church College	.. 4, Cornwallis Square ..	.. Hlndu
	Latif, Sarhan Camrudin, BA (Cantab)	Asstt Controller of Purchase, Indian Stores Deptt ..	.. 6, Esplanade, East ..	.. Mahomedan
	Law, Gokul Chandra (Kumar) ..	Partner, Prawnkissen Law & Co	.. 63, Radhabazar Street ..	.. Hindu
	Law, Narendra Nath, MA, PHD ..	Landholder	.. 96, Amherst Street ..	.. ditto
	Law, Santosh Chandra, BA ..	Merchant and Banker	.. 121, Mooktaram Babu Street ..	ditto
	Law, Satish Chandra	Cashier, National City Bank of New York ..	.. 4, Clive Street ..	.. ditto
	Law, Surendra Nath (Kumar) ..	Partner, Kristodas Law & Co	.. 63, Radhabazar Street ..	.. ditto
	Law, Tarini Charan	Partner, Kristodas Law & Co	.. 63, Radhabazar Street ..	.. ditto
	Law, Upendra Nath	Landholder	.. 25 &26, Baburam Sil Lane	.. ditto
	Lohia, Keshab Deo	Landholder	.. 35-1, Hari Ghose Street ..	.. ditto
	M			
	Mahalanabis, Prashanta Chandra, BSC, MA (Cantab).	Professor, Presidency College	.. 86-1, College Street ..	.. Brahmo
	Mahanty, Purna Chandra, MSC ..	Lecturer, University College	.. 92, Upper Circular Road	.. Hindu
	Mahomed, Yar Mahomed, BA ..	Audit Inspector, Calcutta Corporation	.. Municipal Office ..	.. Mahomedan
	Maitra, Ashutos, MA	Demonstrator, Presidency College	.. 86-1, College Street ..	.. Hindu
	Maitra, Manmohan, BSC (Vic) ..	Junior City Architect, Calcutta Corporation ..	.. Municipal Office ..	.. Brahmo
	Maitra, Nalini Kanta, MA ..	Assistant, Martin & Co	.. 12, Mission Row ..	.. Hindu

Maitra, Nimai Charan, MA, BL	Professor, Vidyasagar College	..	39, Shankar Ghose Lane	ditto
Maitra, Somnath	Professor, Presidency College	..	86-1, College Street	ditto
Maitra, Sushil Kumar, MA, PhD ..	Lecturer, University College	..	Senate House	ditto
Maity, Haripada, MA	Lecturer, University College	..	Senate House	ditto
Majumdar, Abinash Chandra, MA, BL	Bengali Translator to Government	..	Writer's Buildings	ditto
Majumdar, B B	Secretary, Metropolitan Insurance Co, Ld	..	28, Pollock Street	ditto
Majumdar, Bhabendra Nath, BE ..	Executive Engineer, Public Health Deptt, Bengal	..	3, Charnock Place	ditto
Majumdar, Charu Chandra, BL ..	Head Assistant, Health Office, Calcutta Corporation		Municipal Office	ditto
Majumdar, Dwijendra Kumar, MA ..	Demonstrator, Presidency College	..	86-1, College Street	ditto
Majumdar, Girija Prasanna ..	Professor, Presidency College	..	86-1, College Street	ditto
Majumdar, Jitendra Nath ..	Assistant, Roberts McLean & Co, Ld	..	101, Clive Street	ditto
Majumdar, Mrinalkanti, BA ..	Acting Assistant Manager, Government of India Press		8, Hastings Street	ditto
Majumdar, N K	Registrar of Joint Stock Companies, Bengal	..	Treasury Buildings	ditto
Majumdar, N N	Landholder	..	2, Ramanath Kaviraj Lane ..	ditto
Majumdar, Pramadacharan ..	Professor, Bangabasi College	..	25-1, Scott Lane	ditto
Majumdar, Pramada Nath, BL ..	Assistant Manager, Bengal Central Bank, Ld	..	86, Clive Street	ditto
Majumdar, Rampada, MA ..	Professor, Bethune College	..	181, Cornwallis Street	ditto
Majumdar, S C	Superintending Engineer, S W Circle, P W D	..	Treasury Buildings	ditto
Majumdar, Surendra Chandra ..	Professor, Presidency College	..	86-1, College Street	ditto

Names.	Style or calling.	Residence or place of business.	Religion.
Majumdar, Suresh Chandra ..	Director, *Ananda Bazar Patrika*, Ld ..	.. 1, Burman Street	Hindu
Majumdar, V G	Assistant Secretary, Indian Sugar Mills Association ..	135, Canning Street	ditto
Mallik, Abhaya Charan (Rai Sahib) ..	Deputy Assistant Controller, Army Factory Accounts ..	6, Esplanade, East	ditto
Mallik, Anath Nath	Landholder	.. 4, Outram Street	ditto
Mallik, Anukul Chandra (Rai Sahib) ..	Head Assistant, L S-G Branch, Bengal Secretariat ..	Writers' Buildings	ditto
Mallik, Dinendra (Kumar) ..	Landholder	.. Marble Palace, 46, Mooktaram Babu Street.	ditto
Mallik, Dunialal	Landholder	.. 26-1, Prasanna Kumar Tagore Street	ditto
Mallik, Ganesh Chandra (Kumar) ..	Landholder	.. 25, Debendra Mallik Street ..	ditto
Mallik, Gourcharan (Kumar) ..	Landholder	.. 25, Debendra Mallik Street ..	ditto
Mallik, Indra Chandra	Partner, Bengal Paint Supply Co	.. 18, Bonfields Lane	ditto
Mallik, Jatindramohan	Landholder	.. 24, Darponarain Tagore Street ..	ditto
Mallik, Jitendra Nath	Landholder	.. Marble Palace, 46, Mooktaram Babu Street.	ditto
Mallik, Jnanendranath	Landholder	.. 18, Radhanath Mallik Lane ..	ditto
Mallik, Kartic Churn (Kumar) ..	Director, Bengal Bonded Warehouse Association ..	.. 102, Clive Street	ditto
Mallik, Madan Mohan	Landholder	.. 365, Upper Chitpore Road ..	ditto
Mallik, Manick Lal	Zamindar	.. 123, Grey Street	ditto
Mallik, P	Proprietor, P Mallik & Co	.. 81, Clive Street	ditto

Mallik, Pannalal	Landholder	..	26-1, Prasanna Kumar Tagore Street	ditto
Mallik, Pradyumna K	Landholder	..	7, Prasanna Kumar Tagore Street ..	ditto
Mallik, R	Superintendent, Hogg Market, Calcutta Corporation	..	19, Lindsay Street	ditto
Mallik, Shailendra Nath	Landholder	..	18, Radhanath Mallik Lane ..	ditto
Mallik, Shibdas	Landholder	..	34, Durponarain Tagore Street ..	ditto
Mallik, Tarak Nath	Landholder	..	364, Upper Chitpore Road ..	ditto
Mallik, Uditendu Prakash, BE, CE ..	Proprietor, Hope Johnstone & Sons	..	9, Hastings Street	ditto
Mandal, Baidyanath, BSC ..	Proprietor, B N Mandal & Co	..	22, Canning Street	ditto
Mandal, Bibhuti Bhusan, MSC ..	Professor, Scottish Church College	..	4, Cornwallis Square	ditto
Mandal, D N	Professor, St Paul's Cathedral College	..	33-1, Amherst Street	Christian
Mandal, Hrit Kumar, MA ..	Principal,Collin's Institute	..	140, Dharamtala Street	ditto
Mandal, J C	Professor, St Paul's Cathedral College	..	33-1, Amherst Street	Hindu
Mandal, Trivangamurari, MSC ..	Professor, Vidyasagar College	..	39, Shankar Ghose Lane ..	ditto
Marda, Dedraj	Assisant, Birla Bros, Ld	..	8, Royal Exchange Place ..	ditto
Master, N F, AS AA	Accountant	..	265, Bowbazar Street	Zoroastrian
Maulik, Ramendra	Superintendent, Corporation Press	..	Municipal Office	Hindu
Medora, Nariman Maneckjee, BA ..	Manager, British India General Insurance Co, Ld ..	..	2, Old Court House Corner ..	Zoroastrian
Mehta, Gagan Bihari, Lallubhai, MA ..	Manager, Scindia Steam Navigation Co, Ld ..	..	100, Clive Street	Hindu
Mehta, Hiralal	Landholder	..	25, Pollock Street	ditto

No.	Names.	Style or calling.	Residence or place of business.	Religion.
	Mehta, Pherojsha Merwanji Nanabhai	Proprietor, Mehta M N Mehta & Co	65, Ezra Street	Zoroastrian
	Mehta, V M	Assistant Secretary, Indian Chamber of Commerce	135, Canning Street	Hindu
	Menon, C T N, BA	Superintendent, Commercial Intelligence Department	1, Council House Street	ditto
	Mian, Moyenuddin	Head Assistant, Bengal Secretariat, P W D	Writers' Buildings	Mahomedan
	Misra, L P	Dy Agent (Works), E I R	E I R House	Hindu
	Misra, Tej Narain	1st Passing Officer, Imperial Bank of India	Strand Road	ditto
	Mitra, Akshaya Kumar	Treasurer, Calcutta Corporation	Municipal Office	ditto
	Mitra, Amar Krishna (Rai Sahib)	Chief Draftsman, Surveyor-General's Office	13, Wood Street	ditto
	Mitra, Animendra Krishna	Landholder	29-B, Nilmani Mitter Street	ditto
	Mitra, Ashutos Chandra	Landholder	13, Beadon Street	ditto
	Mitra, Basanta Kumar	Landholder	34, Shampukur Street	ditto
	Mitra, Durgapada, BA	Manager, R Laugin & Co	148, Bow Bazar Street	ditto
	Mitra, G K	Director, Kuver, Ld	84, Clive Street	ditto
	Mitra, Gopendra Nath, Mech E (Leeds)	Landholder	14-1, Bechu Chatterjee Street	ditto
	Mitra, Gopi Krishna	Asstt Engineer, Bengal Telephone Corporation Ld	8, Hare Street	ditto
	Mitra, Jatishchand	Landholder	7-5, Beadon Street	ditto
	Mitra, Jiban Krishna	Landholder	2, Raja Rajballav Street	ditto
	Mitra, Jitendra Krishna	Cashier, P & O Banking Corporation, Ld	1, Fairlie Place	ditto

Mitra, Jitendra Krishna	.. Accountant, Office of the Controller, Army Factory Accounts	.. 6, Esplanade, East	..	.. ditto
Mitra, Jnanendra Kumar, BE	.. Building Surveyor, Calcutta Corporation	.. .. Municipal Office	..	.. ditto
Mitra, Jnanendra Kumar	.. Landholder	.. .. 23, Bechu Chatterji Street	..	ditto
Mitra, Jyotirbikas, MA ..	.. Head Master, Saraswati Institution	.. .. 62, Shampukur Street	..	.. ditto
Mitra, Kali Kumar	.. Manager, Guaranteed Relief Syndicate, Ld	.. .. 14, Clive Street	..	.. ditto
Mitra, Kali Shankar ..	.. Engineer and Contractor	.. .. 48, Raja Naba Kissen Street	..	ditto
Mitra, Khagendra Nath (Rai Bahadur), MA	Professor, University College	.. .. Senate House	..	.. ditto
Mitra, Kumar Krishna ..	.. Landholder	.. .. 14, Ahiritola Street	..	.. ditto
Mitra, Manabendra Kissen	.. Merchant and Landholder	.. .. 19, Nilmony Mitter Street	..	ditto
Mitra, Manmatha Nath, MA	.. Head Assistant, Board of Revenue, Bengal	.. .. Writers' Buildings .	..	.. ditto
Mitra, M C ..	.. Asstt Accounts Officer, E I R ..	.. .. E I R House	..	.. ditto
Mitra, Nirmal Chandra, MSC	.. Secretary and Head Master, Mitra Institution	.. .. 55, Harrison Road	..	.. ditto
Mitra, P	.. Asstt Accounts Officer, E I R ..	.. .. E I R House	..	.. ditto
Mitra, Panchanan, MA, PhD	.. Lecturer, University College	.. .. Senate House	..	.. ditto
Mitra, Paresh Chandra ..	.. Proprietor, P C Mitra & Co	.. .. 20, British Indian Street	..	ditto
Mitra, P C ..	.. Prob Asstt Secretary, Port Commissioner's Office	.. .. Strand Road	..	.. ditto
Mitra, Prafulla Chandra, MA, PhD	.. Professor, University College	.. .. 92, Upper Circular Road	..	ditto
Mitra, Praphulla Chandra, BA	.. Extra Asstt Superintendent (Drawing), Survey of India	.. 13, Wood Street	..	.. ditto

No.	Names.	Style or calling.	Residence or place of business.	Religion.
	Mitra, Prakash Krishna ..	.. Manager, J K Mitter & Co ..	.. 2, Lyons Range ..	Hindu
	Mitra, Pramatha Nath ..	.. Sr Accountant, American Express Co, Inc ..	.. 14, Government Place, East ..	ditto
	Mitra, Pravas Chandra ..	.. Partner, Mitra & Chaudhuri ..	.. 103, Clive Street	ditto
	Mitra, Pravat Kumar ..	.. Landholder ..	.. 2, Loudon Street	ditto
	Mitra, Rajani Kanta ..	.. Assistant (2nd Grade), Imperial Bank of India ..	.. Strand Road	ditto
	Mitra, Satish Chandra ..	.. Partner, Mitra & Chaudhuri ..	.. 103, Clive Street	ditto
	Mitra, Satya Charan ..	.. Landholder ..	.. 32, Manicktala Street	ditto
	Mitra, Satyendra Nath, BSc, GDA	.. Accounts Officer, Buttokristo Paul & Co ..	.. 1 & 3, Bonfield Lane	ditto
	Mitra, Satish Chandra, BSC (Eng)	.. Deputy Director of Industries, Bengal ..	.. 40-1A, Free School Street ..	ditto
	Mitra, S C, MA ..	.. Secretary, Indian Mutual Life Association, Ld ..	.. 8-2, Hastings Street	ditto
	Mitra, Shailendra Nath, MA	.. Lecturer, University College ..	.. Senate House	ditto
	Mitra, Shanti Kumar, MA	.. Professor, Scottish Church College ..	.. 4, Cornwallis Square	ditto
	Mitra, Sharat Chandra ..	.. Landholder ..	.. 34, Shampukur Street	ditto
	Mitra, Shishir Kumar, DSC	.. Professor, University College ..	.. 92, Upper Circular Road ..	ditto
	Mitra, Shyamacharan, MA	.. Lower Limit Income Tax Officer	.. 6, Esplanade, East	ditto
	Mitra, S K, MA ..	.. Partner, S K Mitter & Co ..	.. 84-A, Clive Street	ditto
	Mitra, S N ..	.. Superintendent, C A O's Office, E I R	.. E I R House	ditto

Mitra, Subodh Chand	Cashier, Imperial Chemical Industries (India), Ld	18, Strand Road	ditto
Mitra, Sudhangshu Bhusan ..	Mang Director, India Equitable Insurance Co	102, Clive Street	ditto
Mitra, Suhrit C, MA, DPHIL ..	Lecturer, University College	Senate House	ditto
Mitra, Surendra Nath	Landholder	C5-4, College Street	ditto
Mitra, Sushil Chandra, MA, DLitt ..	Director, "Vichitra"	27-1, Faria Pukur Street ..	ditto
Mitra, Sushil Kumar, MA, DLitt ..	Professor, Ripon College	24, Harrison Road	ditto
Moddi, C C	Resdt Branch Secretary, Allianz Und Stuttgarter Verein Insurance Co, Ld	7, Royal Exchange Place	ditto
Modi, Maganlal, G	Assistant Manager, American Foreign Insurance Association ..	15, Clive Row	ditto
Monga, Mangal Singh	Accountant, C A O's Office, E I R	E I R House	Sikh
Mozaffaruddin, Syed (Maulvi), MA ..	Professor, Islamia College	8, Wellesley Street	Mahomedan
Mukharji, A	Assistant Engineer, Dredger Division	3, Charnock Place	Hindu
Mukharji, A B	Superintendent, C A O's Office, E I R	E I R House	ditto
Mukherji, Amarendra Nath ..	Superintendent, C A O's Office, E I R	E I R House	ditto
Mukherji, Anadi Nath	Head Cashier, Macneill & Co ..	2, Fairlie Place	ditto
Mukherji, Ananda Lal	Landholder	1-1C, Hurtuki Bagan Lane ..	ditto
Mukherji, Anath Nath	Secretary, Baghbazar Reading Library	65-2A, Raja Raj Bullav Street ..	ditto
Mukharji, Anil Chandra, MA ..	Accountant, A G's Office, Bengal	Treasury Buildings	ditto
Mukherji, Ardhendu Bhusan, MA, BL	Accountant, Bengal Provincial Co-operative Bank, Ld ..	Writers' Buildings	ditto
Mukherji, Bhaskar, BSc, BA (Cantab)	Assistant Secretary, Calcutta Corporation	Municipal Office	ditto

No.	Names.	Style or calling.	Residence or place of business.	Religion.
	Mukherji, Bholanath, MA	Professor, Scottish Church College	4, Cornwallis Square	Hindu
	Mukherji, Bibhuti Bhusan	General Secretary, East and West Insurance Co, Ld	37, Strand Road	ditto
	Mukherji, Bijali Koomar	Partner, Ramlal Mookerjee & Son	41, Strand Road	ditto
	Mukherji, Bijaya Kumar	Partner, Ramlal Mookerjee & Son	41, Strand Road	ditto
	Mukherji, Brindaban Chandra	Sub-Accountant, Imperial Bank of India	Strand Road	ditto
	Mukherji, Dhirendra Nath, MA	Professor, City College	102-1, Amherst Street	ditto
	Mukherji, Dhirendra Nath	Partner, A C Banerjee & Co	3-1, Bankshall Street	ditto
	Mukherji, Dhirendra Nath, MA	Lecturer, City College	102-1, Amherst Street	ditto
	Mukherji, D N, R A	Auditor	3, Commercial Buildings	ditto
	Mukherji, Durgagati	Assistant Valuer, Calcutta Improvement Trust	5, Clive Street	ditto
	Mukherji, Dwijapada	Sr Accountant, A G's Office, Bengal	Treasury Buildings	ditto
	Mukherji, Dwijendra Nath	Assistant, Martin & Co	12, Mission Row	ditto
	Mukherji, Gangadhar, MA	Professor, Ripon College	24, Harrison Road	ditto
	Mukherji, Gokul Krishna, BA	Assistant Treasurer, Calcutta Corporation	Municipal Office	ditto
	Mukherji, H	Managing Proprietor, Search-Light Clearing Agency	19, Strand Road	ditto
	Mukherji, Hemanta Kumar	Secretary, Y M C A College Branch	86, College Street	Christian
	Mukherji, Hem Chandra	Landholder	47, Bechu Chattarji Street	Hindu
	Mukherji, Himadri Kumar, DSc	Professor, Calcutta University	92, Upper Circular Road	ditto

Mukherji, Hiralal	Sub-Accountant, Imperial Bank of India	Strand Road	ditto
Mukherji, Jatish Chandra ..	Merchant	43, Beadon Street	ditto
Mukherji, J N	Partner, The Eastern Merchants	14, Old Court House Lane ..	ditto
Mukherji, Jnanendra Nath, DSC ..	Professor, University College	92, Upper Circular Road ..	ditto
Mukherji, Jogesh Chandra, MA ..	Lecturer, University College	92, Upper Circular Road ..	ditto
Mukherji, J P	Chartered Accountant	10, Old Post Office Street ..	ditto
Mukherji, Krishna Gopal ..	Partner, Calcutta Supply Agency	8, Canning Street	ditto
Mukherji, Makhan Lal, MA, BL ..	Accountant, Central Bank of India, Ld	100, Clive Street	ditto
Mukherji, Makhan Lal	Director, Calcutta Insurance, Ld	86, Clive Street	ditto
Mukherji, Manmatha Nath ..	Sr Accountant, A G's Office, Bengal	Treasury Buildings	ditto
Mukherji, Manmatha Nath ..	Director, Calcutta Insurance, Ld	86, Clive Street	ditto
Mukherji, Mihirmohan, MA ..	Lecturer, Ripon College	24, Harrison Road	ditto
Mukherji, M N ..	Engineer	12, Old Post Office Street ..	ditto
Mukherji, Nagendra Nath ..	Assistant Assessor, Calcutta Corporation ..	Municipal Office	ditto
Mukherji, Nirmal Kumar ..	Accountant, C A O's Office, E I R	E I R House	ditto
Mukherji, Nritya Lal, MA ..	Professor, Ripon College	24, Harrison Road	ditto
Mukherji, Panchanan	Head Assistant, Public Health Branch, Bengal Secretariat ..	Writers' Buildings	ditto
Mukherji, Panchu Gopal, BSC ..	Sr Accountant, Accountant-General's Office, Bengal ..	Treasury Buildings	ditto
Mukherji, P C	Accountant, C A O's Office, E I R	E I R House	ditto

No.	Names.	Style or calling.	Residence or place of business.	Religion
	Mukherji, Peari Mohan	Proprietor and Manager, Universal Trading Union ..	.. 9, Dalhousie Square	Hindu
	Mukherji, Phanindra Nath ..	Landholder	.. 33-1, Beadon Street	ditto
	Mukherji, Praphulla Chandra, MA, BL	Offg Sr Auditor, E B R	.. 3, Kaylaghat Street	ditto
	Mukherji, Pramatha Nath, MA ..	Chief Auditor, E B R	.. 3, Kaylaghat Street	ditto
	Mukherji, Purnendu Nath, BSC ..	Assistant Chemical Examiner to the Govt of Bengal	.. Medical College	ditto
	Mukherji, Ram Chandra ..	Superintendent, Traffic Office, Martin & Co ..	.. 12, Mission Row	ditto
	Mukherji, Sadhan Gopal ..	Partner, Calcutta Supply Agency	.. 8, Canning Street	ditto
	Mukherji, Satish Chandra ..	Assistant, Gillanders Arbuthnot & Co	.. 8, Clive Street	ditto
	Mukherji, Satkari MA, PhD ..	Lecturer, University College	.. Senate House	ditto
	Mukherji, Shachindranath, BA, LLB ..	Accountant, Martin & Co	.. 12, Mission Row	ditto
	Mukherji, Shishir Kumar ..	Sr Accountant, A G's Office, Bengal	.. Treasury Buildings	ditto
	Mukherji, Shital Chandra, MSc ..	Accountant, Army Factory Accounts	.. 6, Esplanade, East	ditto
	Mukherji, S K	Asstt Traffic Superintendent, E B R	.. 3, Kaylaghat Street	ditto
	Mukherji, S N, F S A A	Incorporated Accountant	.. 1-B, Old Post Office Street ..	ditto
	Mukherji, Subodh Kumar, BE ..	Building Surveyor, Calcutta Corporation ..	.. Municipal Office	ditto
	Mukherji, Sudhanath, BL ..	Assistant Registrar, Calcutta University ..	.. Senate House	ditto
	Mukherji, Shudhindra Nath, MA, BL ..	Legal Assistant, Legislative Department, Bengal ..	.. Council House	ditto
	Mukherji, Surendra Nath ..	Book-keeper, Macneill & Co ..	.. 2, Fairlie Place	ditto

Mukherji, Surendra Nath	2nd Grade Assistant, Imperial Bank of India	Strand Road		ditto
Mukherji, Sushil Kumar	Partner, W C Mukherjee & Co	9, Clive Row		ditto
Mukherji, Sushil Kumar	Partner, Jardine Menzies & Co	14, Hare Street		ditto
Mukherji, Tarak Nath, MA	Professor, Ripon College	24, Harrison Road		ditto
Mukherji, Tarapada, MA	Professor, Presidency College	86-1, College Street		ditto
Mukherji, Tarapada, MA	Professor, Vidyasagar College	39, Shankar Ghose Lane		ditto
Mukherji, Tinkari, BA	Deputy Keeper, Government Art Gallery	28, Chowringhee		ditto
Mukherji, Tulsi Charan, MA	Junior Auditor, E B R	3, Kaylaghat Street		ditto
Muktadir, Syed Abdul	Supervisor, Drainage, Calcutta Corporation	Municipal Office		Mahomedan
Musa, Mahammad (Khan (Bahadur), MA.	Principal, Calcutta Madrassah	Wellesley Square		ditto

N

Nag, Kalidas, MA, DLitt	Lecturer, University College	Senate House		Brahmo
Nag, Nirmal Chandra	Accountant, D E III, Calcutta Corporation	Hogg Street		Hindu
Nahar, Bijaya Sing	Landholder	48, Indian Mirror Street		ditto
Nahar, Bikram Singh	Landholder	50, Indian Mirror Street		ditto
Nahar, Kesri Sing	Landholder	26, Indian Mirror Street		ditto
Nahar, P S	Landholder	26, Indian Mirror Street		ditto
Naik, K M	Director, National Fire and General Insurance Co, Ld	7, Council House Street		ditto

No.	Names	Style or calling.	Residence or place of business.	Religion.
	Nan, Sudhir Chandra, BA	Merchant	18, Bethune Row	Hindu
	Nanavaty, Dady N C	Sub-Agent, Central Bank of India, Ld	100, Clive Street	Zoroastrian
	Nandi, B K	Broker	7-1, Cornwallis Street	Hindu
	Nandi, Durgapada	Accountant, W W Department, Calcutta Corporation	Municipal Office	ditto
	Nandi, K D	Managing Director, Great Indian Motor Works, Ld	12, Government Place, East	ditto
	Nandi, Mathura Kanta	Head Master, Calcutta Training School	8, European Asylum Lane	ditto
	Nandi, P K	Dy Assistant Valuer, Calcutta Improvement Trust	5, Clive Street	ditto
	Nandi, Prafulla, MA (Cantab), BSc	Chartered Accountant	6, Hastings Street	ditto
	Nandi, Praphulla Ch, BSc (Cal), MA(Can).	Professor, Vidyasagar College	39, Shankar Ghose Lane	ditto
	Nandi, S C	Broker	7-1, Cornwallis Street	ditto
	Nandi, Shambhu Nath	Landholder	37, Hari Ghose Street	ditto
	Nandi, S N	Assistant Engineer, Port Commissioner's Office	Strand Road	ditto
	Nandi, Tarini Charan	Landholder	10-4, Cornwallis Street	ditto
	Nataranjan, S, MA, BL	Assistant Accountant-General, Bengal	Treasury Buildings	ditto
	Nateson, Lachminarain Anantkumar, MA	Professor, Scottish Church College	4, Cornwallis Square	ditto
	Nazir, S S	Branch Secretary, Oriental Govt Security Life Assurance Co, Ld	2, Clive Row	Zoroastrian
	Niyogi, Amiya Kanta, BSc	P A to the Hon'ble President, Legislative Council, Bengal	Council House	Hindu

Niyogi, Jitendra Prasad, MA, PhD	..	Lecturer, University College	.. ..	.. Senate House	ditto
Niyogi, Kumudini ..	..	News Editor, Associated Press of India	.. ..	.. Dalhousie Square	ditto
Niyogi, Panchanan, MA, PhD	..	Professor, Presidency College	.. ..	.. 86-1, College Street	ditto
Niyogi, Phanindra Chandra	..	Landholder	.. ..	.. 1-2, Kaliprosad Chakravarti Street ..	ditto
Niyogi, Pravat Chandra, BE	..	Executive Engineer, Suburbon Division, P W D	..	.. Writers' Buildings	ditto

O

Ojha, A L	..	President, Indian Chamber of Commerce	..	.. 135, Canning Street	Hindu

P

Pal, Ashutosh, MSc ..	..	Assistant, Martin & Co	..	.. 12, Mission Row	Hindu
Pal, Bholanath, MSc ..	..	Professor, St Xavier's College	.. ..	.. 30, Park Street	ditto
Pal, Dhirendra Nath, MA	..	Head Master, Metropolitan Institution (Main)	..	.. 39, Sankar Ghose Lane	ditto
Pal, Durgacharan ..	..	Head Assistant, Bengal Secretariat, Police Department		.. Writers' Buildings	ditto
Pal, F ..	..	Consulting Engineer and Architect	.. ..	.. 16, Nanda Kumar Chaudhuri Lane ..	ditto
Pal, Gopeshwar, MSc ..	..	Lecturer, University College	.. ..	.. Senate House	ditto
Pal, Hari Shankar (Sir), KT	..	Proprietor, Butto Kristo Paul & Co	.. ..	.. 30, Sovabazar Street	ditto
Pal, Jyotish Chandra ..	..	Accountant, D E I, Calcutta Corporation		.. Municipal Office	ditto
Pal, Satyendra Nath ..	..	Landholder	.. ..	.. 53, Mirzapore Street	ditto

No.	Names.	Style or calling.	Residence or place of business.	Religion.
	Pal Chaudhuri, Girija Nath, BA ..	Manager, Nadia Engineering Co	.. 79B, Lower Circular Road ..	Hindu
	Pal Chaudhuri, Girindra Nath ..	License Officer, Calcutta Corporation ..	.. Municipal Office	ditto
	Palit, Amrita Ranjan, BSC ..	Asstt Controller of Purchase, Indian Stores Department	.. 6, Esplanade East	ditto
	Palit, Panchanan	Secretary, Paul & Chakravarty, Ld	.. 83, Old China Bazar Street ..	ditto
	Patel, Y R	Acting Branch Manager, New India Assurance Co, Ld	.. 100, Clive Street	ditto
	Poddar, R P	Merchant	.. 5, Lord Sinha Road	ditto
	Powvala, Maneck Kawasji, MA, LLB ..	Assistant Sales Manager, Tata Iron and Steel Co, Ld	.. 100, Clive Street	Zoroastrian
	Primlani, S H, BA	Partner, Oxford Book and Stationery Co ..	17, Park Street	Hindu
	Puri, D C	Asstt Branch Secretary, Oriental Govt Security Life Assurance Co, Ld.	2, Clive Row	ditto
	Puri, Nand Lal, BA, LLB	Agent, Central Bank of India, Ld	.. 100, Clive Street	ditto
	Purohit, K J, FSAA	Accountant, Batliboi & Purohit	.. 6, Hastings Street	ditto
	Pyne, Satyendra Lal, MA, BL ..	Asstt Accountant-General, Bengal	.. Treasury Buildings	ditto
	Q			
	Quadir, Abdul	Accounts Officer, E I R	.. E I R House	Mahomedan
	Quadir, A A	Mechanical Engineer	.. 164, Lower Circular Road ..	ditto
	R			
	Rahman, Quazi Aszudur, BSC ..	District Engineer, District III, Calcutta Corporation	.. Hogg Street	Mahomedan
	Rajabally, Nurmahomed ..	Supervisor, Adamjee Hajee Dawood & Co, Ld ..	.. 4, Dalhousie Square, East ..	ditto

Rajgarhia, Babulall	Landholder	.. 13, Syed Salley Lane ..	.. Hindu
Rajgarhia, Nagarmull	Director, Rajgarhia Brothers, Ld	.. 161, Muktaram Babu Street ..	ditto
Rajgarhia Ramprasad	Governing Director, Rajgarhia Brothers, Ld ..	.. 161, Muktaram Babu Street ..	ditto
Rakshit, Amarendra Nath ..	Engineer, Bhattacharjee & Co	.. 28, Pollock Street	ditto
Ram, Beli	Superintendent, Explosives Office	.. 1, Council House Street	ditto
Rao, B Ram Chandra, MA, PhD ..	Lecturer, University College	.. Senate House	ditto
Rao, Chintamani Srinivasa Raghunath (*Rao Saheb*)	Journalist, *Statesman*, Ld	.. Statesman House	ditto
Rao, Gundabattula Narsinga ..	Manager, Foundry & Railway Equipment Co ..	.. 100, Clive Street	ditto
Rao, Katre Seshagiri, MA ..	Examiner of Patents	.. 1, Council House Street	ditto
Rao, K N Ranga	Asstt Elec Engineer, E I R	. E I R House	ditto
Rao, N S	Accountant, C A O's Office, E I R	.. E I R House	ditto
Rao, Thondu Krishna	Accountant, Army Factory Accounts	.. 6, Esplanade, East	ditto
Rao, V R Venkataramana ..	Manager, J B Advani & Co, Ld	.. 14-4, Old China Bazar Street ..	ditto
Rashid, K A	Accountant, C A O's Office, E I R	.. E I R House	Mahomedan
Rasul, Ghulam, BA	Accountant, Army Factory Accounts	.. 6, Esplanade, East	ditto
Ray, Abani Bhusan, BA	Landholder	.. 20, Hara Chandra Mullick Lane ..	Hindu
Ray, Ajit Kumar, BL	Manager, Bengal Central Bank, Ld	.. 86, Clive Street	ditto

No.	Names.	Style or calling.	Residence or place of business.	Religion.
	Ray, Alauddin ..	.. Asstt Engineer, Inspection, Indian Stores Deptt ..	.. 6, Esplanade, East ..	.. Mahomedan
	Ray, A M MA B Com ..	.. Accountant	.. 1 & 2, Old Post Office Street	.. Hindu
	Ray, Amiya Nath, ACA ..	.. Chartered Accountant, Ray & Ray ..	.. 6, Church Lane ..	.. Brahmo
	Ray, Anil Krishna, BE ..	.. Building Surveyor, Calcutta Corporation ..	.. Municipal Office ..	.. Hindu
	Ray, A P	.. Assistant, McLeod & Co	.. 28, Dalhousie Square ..	.. ditto
	Ray, Ashutos ..	.. Zamindar	.. 36, Panchanan Ghose Lane	.. ditto
	Ray, Bankim Ch, MA ..	.. Officer, Hindusthan Co-operative Insurance Society, Ld	.. Hindusthan Buildings ..	.. ditto
	Ray, Bankim Chandra, MSC	.. Lecturer, University College ..	.. 92, Upper Circular Road	.. ditto
	Ray, Bankim Chandra, BA	.. Partner, N L Ray & Co	.. 7, Lyons Range ..	.. ditto
	Ray, Bankim Chandra, BSC (Eng)	Lighting Superintendent, Calcutta Corporation ..	.. Municipal Office ..	.. ditto
	Ray, Basanta Kumar, BA	.. Accountant, E B R	.. 3, Kaylaghat Street	.. ditto
	Ray, Bhusan Chandra, MA	.. Head Master, Oriental Seminary	.. 336, Upper Chitpur Road	.. ditto
	Ray, Bidhu Bhusan, DSC	.. Lecturer, University College	.. 92, Upper Circular Road	.. ditto
	Ray, Bijaya Kumar, MA ..	.. Lecturer, Ripon College	.. 24, Harrison Road ..	.. ditto
	Ray, Birendra Binode, MA	.. Professor, Scottish Church College	.. 4, Cornwallis Square ..	.. ditto
	Ray, Bishnuprasad (*Kumar*)	.. Landholder	.. 24-1, Darmahatta Street ..	.. ditto
	Ray, Brajasundar, MA ..	.. Professor, City College	.. 102-1, Amherst Street ..	.. Brahmo

Ray, Bratishankar, MSc, PhD	Lecturer, Calcutta University	92, Upper Circular Road	Hindu
Ray, Debendra Nath, MA	Lecturer, Bethune College	181, Cornwallis Street	ditto
Ray, Haimaja Ranjan, BE	Constructional Assistant to C A, Calcutta Corporation	Municipal Office	ditto
Ray, Harendra K, BL	Manager, Co-operative Hindusthan Bank, Ld	12-2, Clive Row	ditto
Ray, Harendra Nath, MSc, PhD	Lecturer, University College	92, Upper Circular Road	ditto
Ray, Hem Chandra, MA, PhD	Lecturer, University College	Senate House	ditto
Ray, Jatindra Nath	Director, Great Eastern Hotel, Ld	1, 2&3, Old Court House Street	ditto
Ray, Jitendra Chandra, BA	Accountant, Army Factory Accounts	3, Kaylaghat Street	ditto
Ray, K, BSc, C P E (Glas)	Engineer K Ray & Bros	6, Hastings Street	ditto
Ray, Kshirode Gopal	Managing Director, Standard Engineering Co, Ld	103, Bow Bazar Street	ditto
Ray, Kumud Bandhu, MA	Lecturer, University College	Senate House	ditto
Ray, Kunja Bihari, BA	Head Assistant, Bengali Translator's Office	Writers' Buildings	ditto
Ray, Mahim Chandra	Merchant	1-1, Hari Mohan Roy Lane	ditto
Ray, Manaranjan	Proprietor, S Ray & Co	11-1, Esplanade, East	ditto
Ray, Manindra Narayan	Senior Accountant, Accountant-General's Office, Bengal	Treasury Buildings	ditto
Ray, Manindra Nath	Sub-Assessor, Calcutta Corporation	Municipal Office	ditto
Ray, Milananda, BA	Head Assistant, Finance Deptt, Bengal Secretariat	Writers' Buildings	ditto
Ray, Muralidhar	Landholder	16, Banamali Sarkar Street	ditto

No.	Names.	Style or calling.	Residence or place of business.	Religion.
	Ray, Nibaran Chandra, MA, BL	Professor, Scottish Church College	4, Cornwallis Square	Brahmo
	Ray, Nihar Ranjan, MA PRS	Lecturer, Education Deptt, Calcutta Corporation	Municipal Office	Hindu
	Ray, Nil Krishna	Landholder	2, Gopi Roy Lane	ditto
	Ray, N N, MA	Electrical Engineer	93-3-3A, Hari Ghose Street	ditto
	Ray, Pratap Chandra	Assistant Commercial Manager, E I R	E I R House	ditto
	Ray, Prabhat Chandra	Executive Engineer, Canals Divn	Treasury Buildings	ditto
	Ray, Priyada Ranjan, MA	Lecturer, University College	92, Upper Circular Road	ditto
	Ray, Priyanath	Zamindar	102, Sovabazar Street	ditto
	Ray, Purna Chandra	Asstt Curator, Geological Survey of India	27, Chowringhee	ditto
	Ray, Purna Chandra, MA, BL	Secretary and Director, Hindu Mutual Life Assurance, Ld	309, Bow Bazar Street	ditto
	Ray, Radhika Bhusan (*Rai Bahadur*)	Director, Great India Insurance, Ld	14, Clive Street	ditto
	Ray, Rajendra Narayan (*Kumar*)	Zamindar	79, Upper Chitpur Road	ditto
	Ray, Ramani Kanta, BA	Director, Great India Insurance, Ld	14, Clive Street	ditto
	Ray, Ramani Mohan, MSc	Professor, Vidyasagar College	39, Shankar Ghose Lane	ditto
	Ray, Ramendra Chandra	Asstt Engineer, City Division, P W D	Writers' Buildings	ditto
	Ray, Ramendra Nath	Zamindar	102, Sovabazar Street	ditto
	Ray, Ranajit, MA	Chartered Accountant, Ray & Ray	6, Church Lane	Brahmo

Ray, R N, BA (Cantab) ..	..	Superintendent N B, Hindusthan Co-operative Insurance Society, Ld.	Hindusthan Buildings ..	.. Hindu
Ray, Satyananda, MA, PhD	..	Principal, Training College for Teachers, Calcutta Corporation	1, Wellington Square ..	.. ditto
Ray, Satyendra Nath ..	..	Head Assistant, Bengal Secretariat, Political Department ..	Writers' Buildings ..	.. ditto
Ray, Shailaja Ranjan, MSc	..	Professor, Vidyasagar College	39, Shankar Ghose Lane	.. ditto
Ray, Shashi Kumar, BSc	..	Accountant, Army Factory Accounts	6, Esplanade, East ..	.. ditto
Ray, Shyamendra Lal ..	..	Zamindar & Banker	53A, Sovabazar Street ..	.. ditto
Ray, S K, BE, CE ..	..	Managing Director, Associated Engineers, Ld	14, Clive Street ..	.. ditto
Ray, Subinoy ..	..	Artist, Geological Survey of India	27, Chowringhee ..	.. Brahmo
Ray, Sudhangshu Bhusan BCom	..	Addl Income Tax Officer	3, Government Place, West	.. Hindu
Ray, Suhas Chandra, MA	..	Lecturer, University College ..	Senate House ..	.. ditto
Ray, Sukhendra Kumar	..	Professor, Bangabasi College	25-1, Scott Lane ..	.. ditto
Ray, Suranjana, BA ..	..	Sr Accountant, Accountant-General's Office, Bengal ..	Treasury Buildings ..	.. ditto
Ray, Suresh Chandra ..	..	Head Assistant, Agri & Industries Deptt, Bengal	Writers' Buildings ..	.. ditto
Ray, T K, MSc ..	..	Electrical Engineer, Calcutta Corporation ..	Municipal Office ..	.. ditto
Ray Chaudhuri, Dwijendra Nath	..	Professor, St Paul's Cathedral College	33-1, Amherst Street ..	.. ditto.
Ray Chaudhuri, Hem Chandra, MA, PhD		Lecturer, University College	Senate House ..	.. ditto
Ray Chaudhuri, Jatindra Chandra, MA, BL.		Insurance Officer, Central Bank of India, Ld	100, Clive Stre t ..	.. ditto

No.	Names.	Style or calling.	Residence or place of business.	Religion.
	Ray Chaudhuri, Mahitos Kumar ..	Professor, Bangabasi College	25-1, Scott Lane	Hindu
	Ray Chaudhuri, N K	Chief Agent, Bengal River Service Co Ld	4, Clive Ghat Street	ditto
	Ray Chaudhuri, Nalini Mohan, BA ..	Director, Sanyal Banerjee & Co, Ld	268, Bow Bazar Street	ditto
	Ray Chaudhuri, Rabindra Nath (*Kumar*)	Landholder	9, Hungerford Street	ditto
	Ray Chaudhuri, Satya Prasad, DSc ..	Lecturer, University College	92, Upper Circular Road ..	ditto
	Ray Chaudhuri, Shachibilas ..	Partner, A B Patrika, Ld	2, Ananda Chatterjee Lane ..	ditto
	Ray Chaudhuri, T K ..	Superintendent and Accountant, Calcutta Improvement Trust ..	5, Clive Street	ditto
	Rudra, Harendra Krishna ..	Landholder	1, Brindaban Bose Lane	ditto
	Rudra, Manindra Nath, MSc ..	Managing Proprietor, The Eastern Chemical Co ..	14-1, Nather Bagan Street ..	ditto
	S			
	Sadhu, Manindra Nath (*Rai Sahib*) ..	Assistant Engineer, Suburban Division, P W D ..	Writers' Buildings	Hindu
	Saha, Joges Lal, BSc	Partner, Ghose & Saha	1-B, Old Post Office Street ..	ditto
	Saha, Matilal, BE	Asstt Assessor, Calcutta Corporation	Municipal Office	ditto
	Saha, R P	General Secretary, Bengal River Service Co Ld ..	4, Clive Ghat Street	ditto
	Saha, Surendra Nath	Accountant, A G's Office, Bengal	Treasury Buildings	ditto
	Sahay, Baijnath, BSc	Accountant, Army Factory Accounts	6, Esplanade, East	ditto
	Sahu Kar, Nariman D, BA ..	Manager, Godrej & Boyce Mfg Co, Ld	102, Clive Street	Zoroastrian
	Samaddar, Bhupal Bihari ..	Head Assistant, Bengal Secretariat, Education Department ..	Writers' Buildings	Hindu

Sanaulla, M (Maulvi), MA	Professor, Presidency College	86-1, College Street	Mahomedan
Sanyal, Dwijendra Kumar, MA, B Com	Secretary, Indian Mining Federation	20, Strand Road	Hindu
Sanyal, Hiran Kumar, MA	Asstt Editor, Bengal Co-operative Organisation Journal	3-1, Bankshall Street	Brahmo
Sanyal, M, BE	Proprietor, Sanyal & Co	309, Bow Bazar Street	Hindu
Sanyal, Manindra Kumar, BSc	Sr Accountant, A G's Office, Bengal	Treasury Buildings	ditto
Sanyal, N (Dr), MA, PhD (Lond)	Superintendent (Ag), Hindusthan Co-operative Insurance Society, Ltd.	Hindusthan Buildings	ditto
Sanyal, Narendra Nath, BSc	Dy Superintendent, Commercial Intelligence Department	1, Council House Street	ditto
Sanyal, Pramatha Chandra, MA	Proprietor, Bengal Stores Supply Co	57, Canning Street	ditto
Sanyal, Shachindra Narayan	Landholder	1, Rani Hemanta Kumari Street	ditto
Sanyal, Shaileshwar, BE	Member, Association of Engineers	2, Royal Exchange Place	ditto
Sarbadhikari, Dhirendra Nath, BE	Building Surveyor, Calcutta Corporation	Municipal Office	ditto
Sarkar, A K	Engineer & Contractor	10, Old Post Office Street	ditto
Sarkar, A P	Landholder	7, Short Street	Brahmo
Sarkar, Arun Kumar, MA	Asstt Superintendent, Statistical Office, E I R	E I R House	Hindu
Sarkar, Balaf Chand	Partner, Calcutta Supply Agency	8, Canning Street	ditto
Sarkar, Banabihari	Landholder	65-1, Sasi Bhusan De Street	ditto
Sarkar, Benoy Kumar, MA	Lecturer, University College	Senate House	ditto

No.	Names.	Style or calling.	Residence or place of business.	Religion.
	Sarkar, Bholanath ..	.. Sr Accountant, Accountant-General's Office, Bengal	.. Treasury Buildings ..	.. Hindu
	Sarkar, Bijali Bihari, DSC	.. Lecturer, University College ..	.. 92, Upper Circular Road	.. Brahmo
	Sarkar, Bijaya Kumar, BA	.. Lecturer, University College ..	.. Senate House ..	.. Hindu
	Sarkar, Bijaya Kumar ..	.. Head Clerk, Govt Accounts Deptt, Imperial Bank of India	.. Strand Road ..	.. ditto
	Sarkar, B N ..	.. Engineer & Contractor ..	.. 9, Hastings Street ..	.. ditto
	Sarkar, Chandra Shekhar	.. Asstt Engineer (Inspection), Indian Stores Deptt ..	.. 6, Esplanade, East ..	.. ditto
	Sarkar, D N ..	.. Professor, St Paul's Cathedral College ..	.. 33-1, Amherst Street ..	.. ditto
	Sarkar, Harenda K, MA ..	.. Professor, St Xavier's College	.. 30, Park Street ..	.. ditto
	Sarkar, Hemanta Kumar	.. Manager, New Asiatic Life Insurance Co Ld (Birla Bros Ld)	.. 8, Royal Exchange Place	.. ditto
	Sarkar, Hiran Kumar, BE	.. Partner, Sircar Mittra & Co	.. 5, Nimtalla Ghat Street	.. ditto
	Sarkar, Jagadish Chandra, BE	.. City Architect, Calcutta Corporation	.. Municipal Office ..	.. ditto
	Sarkar, Madhusudan, MA	.. Professor, Scottish Church College	.. 4, Cornwallis Square ..	.. ditto
	Sarkar, Mahendra Lal, MA	.. Professor, Scottish Church College	.. 4, Cornwallis Square ..	.. Christian
	Sarkar, Mahendra Nath	.. Professor, Presidency College	.. 86-1, College Street ..	.. Hindu
	Sarkar, N K ..	.. Merchant	.. 10, Chowringhee ..	.. ditto
	Sarkar, N N, MA ..	.. Dy Chief Accountant, Calcutta Corporation ..	.. Municipal Office ..	.. ditto

Sarkar, N R ..	.. General Manager, Hindusthan Co-operative Insurance Society, Ld	6A, Corporation Street ..	..	Hindu
Sarkar, P ..	.. Assistant Secretary, National Insurance Co, Ld ..	.. 7, Council House Street	..	ditto
Sarkar, Pabitra Ranjan ..	.. Officer, Hindusthan Co-operative Insurance Society, Ld	.. Hindusthan Buildings ..	..	ditto
Sarkar, Pramatha Nath, MA	.. Professor, City College	.. 102-1, Amherst Street ..	..	ditto
Sarkar, Priyabrata, MA ..	.. Professor, Vidyasagar College	.. 39, Shankar Ghose Lane ..	..	Brahmo
Sarkar, Pulin Bihari (Dr)	.. Lecturer, University College	.. 92, Upper Circular Road ..	..	Hindu
Sarkar, Satya Prakash ..	.. Assistant Valuer, Calcutta Improvement Trust ..	.. 5, Clive Street ..	..	ditto
Sarkar, Shachindra Nath, MSc	.. Merchant and Landholder	.. 34-1-1, Beadon Street ..	..	ditto
Sarkar, Shikhi Bhusan	.. Manager, A T Gillespie	.. 13, Government Place, East	..	ditto
Sarkar, Subodh Ch, BA	.. Officer, Hindusthan Co-operative Insurance Society, Ld	.. Hindusthan Buildings ..	..	ditto
Sarkar, Sudhir Kumar, MA	.. Partner, M C Sarkar & Sons	.. 90-2A, Harrison Road ..	..	ditto
Sarkar, Sushil Kumar ..	.. Landholder ..	.. 15-1, Issur Mill Lane ..	..	ditto
Sarkar, Sushovan Chandra	.. Professor, Presidency College	.. 86-1, College Street ..	..	Brahmo
Saroji, Devadutt ..	.. Merchant	.. 63, Ezra Street ..	..	Hindu
Seal, Ashutos ..	.. Landholder	.. 38, Muktaram Babu Street	..	ditto
Seal, Brindaban Chandra	.. Sub-Accountant, Imperial Bank of India ..	.. Strand Road ..	..	ditto
Seal, Chaitanya Chand ..	.. Personal Assistant to the Chief Engineer, P H D, Bengal	.. 3, Charnock Place ..	..	ditto

No.	Names.	Style or calling.	Residence or place of business.	Religion.
	Seal, Hrishikesh ..	.. Proprietor, Calcutta Hardware and Metal Supply Co	.. 15, Clive Row ..	.. Hindu
	Seal, Manick Lal ..	.. Partner, Calcutta Engineering Stores Co ..	.. 9, Clive Row ..	.. ditto
	Seal, Narendra Nath ..	.. Landholder	.. 26, Ram Mohan Saha Lane	.. ditto
	Seal, Shripati Nath ..	.. Cashier, National Bank of India, Ld	.. 104, Clive Street ..	.. ditto
	Sen, Achal Kumar ..	.. Landholder	.. 10, Rajendra Sen Lane ..	.. ditto
	Sen, Adi Nath, MA, BSc (Glas)	.. Inspector of Technical and Industrial Institutions, Bengal	.. 40-1A, Free School Street	.. ditto
	Sen, Aloke Kumar, MSc ..	.. Professor, Vidyasagar College	.. 39, Shankar Ghose Lane ..	.. ditto
	Sen, Amiya Kumar, MA ..	.. Lecturer, University College	.. Senate House ..	.. Brahmo
	Sen, Amulya Kumar, BSc	.. District Engineer, District I, Calcutta Corporation ..	.. 79, Cornwallis Street ..	.. Hindu
	Sen, Arun Chandra, MA ..	.. Professor, Scottish Church College	.. 4, Cornwallis Square ..	.. ditto
	Sen, A. T.	.. A T S, E B R	.. 3, Kaylaghat Street ..	.. ditto
	Sen, Bhupati Mohan ..	.. Principal, Presidency College	.. 86-1, College Street ..	.. Brahmo
	Sen, Bimala Kanta, BA ..	.. Superintendent, Karim Bux Bros Press ..	.. 9, Anthony Bagan Lane ..	.. Hindu
	Sen, Binaya Chandra, MA, PhD	.. Lecturer, University College	.. Senate House ..	.. ditto
	Sen, Bipin Bihari (*Rai Sahib*)	.. Cashier, Gillanders, Arbuthnot & Co	.. 8, Clive Street ..	.. ditto
	Sen, B K	.. Assistant, Turner Morrison & Co, Ld	.. 6, Lyons Range ..	.. Christian
	Sen, B N, BE ..	.. Engineer and Contractor ..	.. 26, Strand Road ..	.. Hindu

Sen, Debendra Nath	Professor, Presidency College	86-1, College Street	Brahmo
Sen, Dhirendra Nath	Landholder	76, Masjidbari Street	Hindu
Sen, Hemendra Kumar, DSc	Professor, University College	92, Upper Circular Road	ditto
Sen, Indubhusan	Secretary, India Provident Co, Ld	10, Clive Row	ditto
Sen, J. C.	Agent, Comilla Bank, Ld	10, Clive Street	ditto
Sen, Jogesh Chandra (*Rai Bahadur*)	Landholder	5, Kumartuli Street	ditto
Sen, Jyotish Govinda (Dr), MA, PhD	2nd Inspector of Schools, Presidency Division	40-1A, Free School Street	ditto
Sen, Kanti Chandra	Assistant, Bird & Co	1-1, Clive Street	ditto
Sen, Kumud Bihari, MSc	Assistant, Bird & Co	1-1, Clive Street	ditto
Sen, Manimohan, MA	Professor, Vidyasagar College	39, Shankar Ghose Lane	ditto
Sen, N	Secretary, D M Dass & Sons	28, Dalhousie Square	ditto
Sen, Nagendra Nath	Member, Association of Engineers	2, Royal Exchange Place	ditto
Sen, Nikhil Ranjan, DSc, PhD	Professor, University College	92, Upper Circular Road	ditto
Sen, Nripendra Nath, DSc	Lecturer, University College	92, Upper Circular Road	ditto
Sen, Paresh Nath	Elecl Asstt Engineer, Western Electrical Dn, P W D	Writers' Buildings	ditto
Sen, Pramode Chandra	Professor, Bangabasi College	25-1, Scott Lane	ditto
Sen, Pravas Kumar	Assistant (2nd Grade), Imperial Bank of India	Strand Road	ditto
Sen, Priya Ranjan, MA	Lecturer, University College	Senate House	Brahmo

No.	Names.	Style or calling.	Residence or place of business.	Religion.
	Sen, Rabindra Nath	Partner, N L Roy & Co	7, Lyons Range	Hindu
	Sen, Ramendra Kumar	Accountant, Army Factory Accounts	6, Esplanade, East	ditto
	Sen, Satish Chandra, MA, BL ..	Professor, City College	102-1, Amherst Street	ditto
	Sen, Satish Chandra, MA, BL ..	Vice-Principal, Vidyasagar College	39, Sankar Ghose Lane	ditto
	Sen, Siddhanath, BSc (Lond) ..	Officer, Hindusthan Co-operative Insurance Society, Ld ..	Hindusthan Buildings	ditto
	Sen, S K, ASAA, BA	Accountant	4, Hastings Street	ditto
	Sen, Sunil Chandra	Demonstrator, Presidency College	86-1, College Street	ditto
	Sen, Surendra Kumar, BL ..	Director, Bengal Central Bank, Ld	86, Clive Street	ditto
	Sen, Surendra Nath, MA, PhD, BLitt	Professor, University College	Senate House	ditto
	Sen, Surendra Nath	Chief Clerk, Office of the Chief Mining Engineer, Railway Board	1, Council House Street	ditto
	Sen, Tripurananda, BA	Accountant, Office of the Dy Director of Agriculture, Western Circle, Bengal	Writers' Buildings	ditto
	Sen Gupta, Bhupati Bhusan ..	Dy Assistant Valuer, Calcutta Improvement Trust	5, Clive Street	ditto
	Sen Gupta, D N, BE	Executive Engineer, Damodar Division, P W D	Treasury Buildings	ditto
	Sen Gupta, Indu Bhusan, MA, BL ..	Professor, Vidyasagar College	39, Shankar Ghose Lane	ditto
	Sen Gupta, Jatish Ch	Professor, Presidency College	86-1, College Street	ditto
	Sen Gupta, Jitendra Nath, MA, BL ..	Secretary, Bengal National Chamber of Commerce ..	2, Royal Exchange Place ..	ditto
	Sen Gupta, Kiran Chandra ..	Manager, Jail Depot	Writers' Buildings	ditto

Sen Gupta, Lalit Kumar ..	.. Assistant, Martin & Co	.. 12, Mission Row .. .	ditto	
Sen Gupta, Mani Mohan	.. Sr. Accountant, C A O's Office, E I R	.. E I R House	ditto	
Sen Gupta, Monmohan, BE SB	... P A to Chief Engineer, P W D	.. Writers' Buildings	ditto	
Sen Gupta, Prasad Das ..	.. Assistant Engineer, Canals Divn	.. Treasury Buildings	ditto	
Sen Gupta, Bisheshwar, MSC	.. Rector, School of Cottage Industries	.. 6, Ramanath Mazumdar Street ..	ditto	
Sen Gupta, R M ..	.. Manager, *Advance*	.. Dharamtala Street	ditto	
Sen Gupta, Subodh Kumar	.. Assistant Valuer, Calcutta Improvement Trust ..	.. 5, Clive Street	ditto	
Sen Gupta, Tara Prasanna	.. Dy Assistant Valuer, Calcutta Improvement Trust ..	.. 5, Clive Street	ditto	
Seraogi, Baijnath, BA ..	.. Merchant	.. 13, Saha Lane	Jain	
Seth, Binaya Krishna ..	.. Proprietor, Lily Biscuit Co	.. 13, Ramnarayan Bhattacharya Lane	Hindu	
Seth, Gostha Bihari ..	.. Zamindar	.. 59, Banstola Street	ditto	
Seth, Nalini Kanta ..	.. Landholder	.. 347, Upper Chitpur Road ..	ditto	
Seth, Phanindra Chandra	.. Manager, Lily Biscuit Co	.. 13, Ramnarayan Bhattacharya Lane	ditto	
Seth, Ram Chandra, BL ..	.. Director, Bengal Central Bank, Ld	.. 86, Clive Street, ...	ditto	
Sethi, Jagat Ram, MSC ..	.. Chief Chemist, Imperial Chemical Industries Laboratory	.. 20, Strand Road	ditto	
Shafi, Mahomed Iqbal ..	.. Assistant, Mackinnon Mackenzie & Co	.. 16, Strand Road	Mahomedan	
Shah, B K, BCOM, A IA Lond	.. Actuary, Hindusthan Co-operative Insurance Society, Ld	.. Hindusthan Buildings	Hindu	

No.	Names.	Style or calling.	Residence or place of business.	Religion.
	Shariff, Md S N, BA	Sub-Assessor, Calcutta Corporation	Municipal Office	Mahomedan
	Sharma, Kedar Nath, BSC	Asstt Engineer, Indian Stores Department	6, Esplanade, East	Hindu
	Shastri, Dakshina Ranjan (Pandit), MA	Lecturer, Sanskrit College	College Square	ditto
	Shenoy, V P	Assistant (2nd Grade) Imperial Bank of India	Strand Road	ditto
	Shoaib, Mahomed, MA, LLB	Dy Controller, Army Factory Accounts	6, Esplanade, East	Mahomedan
	Siddique, Jamal	Broker	22, Canning Street	ditto
	Siddique, Mahomed Zubair, MA, PhD	Professor, University College	Senate House	ditto
	Sikdar, Indu Bhusan	Assistant (2nd Grade), Imperial Bank of India	Strand Road	Hindu
	Singh, Raghubir	Testing Officer, W W, Calcutta Corporation	Municipal Office	ditto
	Sinha, Amulya Ratan, MA	Dy Superintendent, Commercial Intelligence Department	1, Council House Street	ditto
	Sinha, Ananda Krishna, MA	Professor, Ripon College	24, Harrison Road	ditto
	Sinha, Basanti Charan, MA	Proprietor, Bengal Preserving Co	10, Creek Lane	ditto
	Sinha, Bibhas Chandra	Landholder	145-1, Baranasi Ghose Street	ditto
	Sinha, Chaturbhuj Prasad	Head Clerk and Accountant, C E's Office, E I R	E I R House	ditto
	Sinha, Harish Chandra, MA, PhD	Lecturer, University College	Senate House	ditto
	Sinha, Jogesh Chandra	Professor, Presidency College	86-1, College Street	ditto
	Sinha, K, BA	Revenue Officer, Calcutta Corporation	Sir Stuart Hogg Market	ditto
	Sinha, Krishna Prasanna	Partner, A B Patrika, Ld	2, Ananda Chatterjee Lane	ditto
	Sinha, Purna Chandra	Landholder	147, Baranasi Ghose Street	ditto
	Sinha, R M	District Signal Engineer, E I R	E I R House	ditto
	Sinha Radha Raman, BE	Deputy Surveyor, Calcutta Corporation	Municipal Office	ditto

Sinha, Sudhir Chandra ..	..	Director, George Miller & Co, Ld	7, Hastings Street ..	.. ditto
Srinivasam, K C ..	..	Accounts Officer, E I R	E I R House ..	.. ditto
Srinivasan, N, BA ..	..	Auditor, Chief Auditor's Office, E I R ..	E I R House ..	.. ditto
Subnis, Jivaji Dattatray ..	..	Manager, George Newnes Book Co (India), Ld ..	10, Clive Row ..	.. ditto
Subrahmanyan, T V, MA ..	..	Accountant, A G's Office, Bengal	Treasury Buildings ..	.. ditto
Subramanian, Venkata Subbier (*Rao Sahib*), BA		P A to Controller of Inspection, Indian Stores Deptt ..	6, Esplanade, East ..	.. ditto
Sudderuddin, K, BA ..		Resident	36, Theatre Road ..	.. Mahomedan
Suhrawardy, Shahid, BA (Oxon) ..		Professor, Calcutta University	Senate House ..	.. ditto
Sundarachari, R (*Dewan Bahadur*) ..		Chief Auditor, E I R	E. I. R. House ..	.. Hindu
Sundaram, Chokkanadhapuram Annaswamy		Manager, Down Bros, Ld	21, Old Court House Street ..	None
Sundaram, V S ..	..	Chief Accounts Officer, E I R	E I R House ..	.. Hindu
Sur, Bishnudas, MCom ..		Audit Inspector, Calcutta Corporation	Municipal Office ..	.. ditto
Swaminathan, N ..	..	Assistant, Branch Secretary, Oriental Government Security Life Assurance Co, Ld	2, Clive Row ..	.. ditto

T

Tagore, Alakendra Nath ..		Landholder	5, Dwarkanath Tagore Lane ..	Hindu
Tagore, Bratindra Nath ..		Landholder	5, Dwarkanath Tagore Lane ..	ditto
Tagore, Kanakendra Nath ..		Landholder	5, Dwarkanath Tagore Lane ..	ditto
Tagore, Kshemendra Mohan ..		Landholder	27, Park Lane ..	ditto
Tagore, Nabendra Nath ..		Landholder	5, Dwarkanath Tagore Lane ..	ditto
Tagore, Ranendra Mohan ..		Landholder	11, Pathuriaghatta Street ..	ditto
Tagore, Rathindra Nath ..		Landholder	6, Dwarkanath Tagore Lane ..	Brahmo

No.	Names.	Style or calling.	Residence or place of business.	Religion.
	Tagore, Samarendra Nath ..	Zamindár	.. 5, Dwarkanath Tagore Lane ..	Hindu
	Tandon, Lachmi Narain	Accountant, Allahabad Bank, Ld	.. 6, Royal Exchange Place ..	ditto
	Tapuriah, Moongtu Lall (*Rái Bahadur*)	Merchant	.. 42-1, Strand Road	ditto
	Tarmaster, Magaldas Luxmidas, FSAA.	Proprietor, Tarmaster & Co	.. 6, Old Post Office Street ..	ditto
	Thakur, Amareswar, MA, PHD ..	Lecturer, University College	.. Senate House	ditto
	Topader, Kshirode Nath ..	Actg Accountant, Imperial Bank of India ..	.. 8, Clive Street	ditto
	V			
	Vidyanathan, A, BA, BL, ACII (Lond)	Officer, Hindusthan Co-operative Insurance Society, Ld	.. Hindusthan Buildings	Hindu
	Vaish, Radha Krishna	Examiner of Patents	.. 1, Council House Street	ditto
	Venkateswaran, Subbiah, DSC ..	Examiner of Patents	.. 1, Council House Street	ditto
	Venugopal, C T, MSC	Accounts Officer, E B R	.. 3, Kaylaghat Street	Christian
	Viccaji, V F	Incorporated Accountant, S R Battiboy & Co ..	.. 1-B, Old Post Office Street ..	Zoroastrian
	W			
	Waziruddin	Assistant, Karnani Industrial Bank	.. 3, Synagogue Street	Mahomedan
	Y			
	Yoonus, M	Partner, Haji Ismail Sait & Sons	.. 55, Canning Street	Mahomedan
	Yusuf, Maulvi Mahomed (*Khan Bahádur*) MA, MRAS	Head Master, Calcutta Madrassa	.. 19, Wellesley Square	ditto

O. MOSES,
Clerk of the Crown.

Registered No. C207

No. 13 of 1935

The Calcutta Gazette

THURSDAY, MARCH 28, 1935.

CONTENTS:

	Page.		Page.
Statements under the Cotton Ginning and Pressing Factories Act, 1925 ..	395	Vital Statistics of towns of Bengal for the week ending 9th March 1935 ..	434
Monthly and Annual Rainfall Table in the province of Bengal for the year 1934 ..	396—415	Weather and Crop Report for the week ending 20th March 1935	435—438
Daily Rainfall recorded in Bengal for the month of February 1935	416—431	Prices-current (wholesale and retail) of food-grains, salt, etc., in the districts of Bengal for the first half of March 1935	439—442
Statements of weekly gauge readings on certain rivers in Bengal	432—433		

SUPPLEMENT.

Official Papers.

FORM C—BENGAL.

STATEMENT OF COTTON PRESSED IN THE BENGAL PRESIDENCY FOR THE WEEK ENDING THE 15th MARCH 1935.

[Section 5(2) of the Cotton Ginning and Pressing Factories Act, 1925.]

Name of Division or block.	Number of bales pressed.				Districts included in the block.
	During the week.	During the corresponding week last year.	Since 1st September 1934 (the date prescribed by the Local Government as the commencement of the season).	During the corresponding period last year.	
The Bengal Presidency	1,348 or 1,336·22 bales of 400 lbs. each.	1,632	12,079	14,844	All districts in the Presidency.

J. B. McBride,
Chief Inspector of Factories, Bengal.

Supplementary statement showing particulars of a cotton pressing factory in Bengal and the special mark allotted to it for the cotton year 1934 as required under the Cotton Ginning and Pressing Factories Act, 1925, and the rules made thereunder.

Name and address of factory.	Name of owner or lessee.	Special mark allotted.
Homer Jute and Cotton Works, 31, Harakumar Tagore Strand, Baranagore.	C. C. Miller, Esqr.	22 L

J. B. McBride,
Chief Inspector of Factories, Bengal.

Monthly and Annual Rainfall Table in the

Division.	District.	Station.	January.			February.			March.		
			Number of rainy days.	Rain-fall.	Normal rainfall.	Number of rainy days.	Rain-fall.	Normal rainfall.	Number of rainy days.	Rain-fall.	Normal rainfall.
Presidency ..	24-Parganas ..	Saugar Island (Obsy.)	Nil	Nil	0·30	Nil	Nil	1·12	Nil	Nil	1·43
		Diamond Harbour ..	Nil	0·04	0·55	Nil	0·09	1·30	Nil	0·09	1·66
		Budge-Budge ..	Nil	Nil	0·47	Nil	0·04	1·37	Nil	0·03	1·85
		Canning Town ..	Nil	Nil	0·39	Nil	Nil	0·84	Nil	Nil	1·71
		Alipore (Obsy.) ..	Nil	Nil	0·34	Nil	0·08	1·10	1	0·16	1·44
		Barrackpore ..	Nil	Nil	0·39	Nil	Nil	1·28	Nil	Nil	1·65
		Dum-Dum ..	Nil	Nil	0·46	2	1·11	1·12	1	0·18	1·49
		Baraset ..	Nil	Nil	0·52	Nil	Nil	1·28	Nil	Nil	1·48
		Basirhat ..	Nil	0·01	0·40	1	0·22	1·03	Nil	0·08	1·66
		Gosaba ..	Nil	0·02	(n)	Nil	Nil	(n)	1	0·45	(n)
		Total ..	Nil	0·05	3·82	3	1·54	10·44	2	0·54	14·37
		District average ..	Nil	0·01	0·42	0·33	0·17	1·16	0·22	0·06	1·60
	Nadia ..	Ranaghat ..	1	0·40	0·40	2	0·73	1·21	Nil	0·05	1·64
		Krishnagar (Obsy.) ..	1	0·28	0·44	2	1·15	1·20	Nil	Nil	1·82
		Chuadanga ..	1	0·93	0·39	2	0·90	1·11	Nil	Nil	1·75
		Meherpur ..	1	0·53	0·36	1	0·76	1·03	Nil	Nil	1·67
		Kushtia ..	2	0·50	0·32	3	1·50	0·96	Nil	Nil	1·50
		Haringhata ..	Nil	0·00	0·09	2	0·43	0·35	Nil	0·00	1·37
		Total ..	6	2·64	2·00	12	5·47	5·86	Nil	0·05	9·75
		District average ..	1·00	0·44	0·33	2·00	0·91	0·98	Nil	0·01	1·63
	Murshidabad ..	Kandi ..	2	0·52	0·39	2	1·14	0·92	Nil	Nil	1·17
		Berhampore (Obsy.) ..	2	0·48	0·35	1	1·06	0·88	Nil	Nil	1·07
		Lalbagh	1	0·59	0·33	2	1·57	0·70	Nil	Nil	1·02
		Azimgunj ..	2	0·52	0·42	1	1·44	0·71	Nil	Nil	0·96
		Jangipur ..	3	1·32	0·47	3	1·56	0·71	Nil	Nil	0·81
		Lalgola	3	1·18	0·47	3	1·50	0·85	Nil	Nil	0·91
		Akriganj ..	3	1·62	0·42	3	1·51	0·66	Nil	Nil	1·02
		Patkabari ..	1	0·51	0·22	1	0·94	0·68	Nil	Nil	0·84
		Dumkal ..	2	0·43	0·23	3	1·07	0·70	Nil	Nil	1·32
		Kallyaganj (Ishanpur)	2	0·54	0·31	3	2·29	0·82	Nil	Nil	1·12
		Khargram ..	2	0·36	(n)	2	0·86	(n)	Nil	Nil	(n)
		Bharatpore ..	2	0·40	(n)	3	0·70	(n)	Nil	Nil	(n)
		Total ..	21	7·71	3·71	22	14·08	7·63	Nil	Nil	10·24
		District average ..	2·10	0·77	0·37	2·20	1·41	0·76	Nil	Nil	1·02
	Jessore ..	Narail	1	0·10	0·51	3	0·90	1·24	Nil	Nil	1·98
		Jessore (Obsy.) ..	1	0·31	0·36	1	0·18	1·34	Nil	0·01	2·11
		Jhenida	1	0·59	0·40	2	1·05	1·23	Nil	Nil	2·09
		Magura	1	0·40	0·37	4	1·20	1·09	Nil	Nil	2·04
		Bongaon ..	Nil	Nil	0·35	3	1·11	1·17	Nil	Nil	1·81
		Total ..	4	1·40	1·99	13	4·44	6·07	Nil	0·01	10·03
		District average ..	0·80	0·28	0·39	2·60	0·89	1·21	Nil	Nil	2·00
	Khulna ..	Satkhira (Obsy.) ..	Nil	0·08	0·33	Nil	0·02	0·75	1	0·24	1·32
		Bagerhat ..	1	0·32	0·49	2	1·05	1·16	Nil	Nil	1·95
		Khulna (Obsy.) ..	Nil	0·12	0·47	2	0·73	0·84	2	0·54	2·40
		Kaliganj ..	Nil	0·06	0·59	1	0·12	1·43	2	0·58	1·80
		Nakipur (a) ..	..	..	0·27	..	..	1·00	..	..	1·59
		Dumuria ..	Nil	Nil	0·45	2	1·25	1·31	Nil	Nil	1·91
		Rampal	Nil	Nil	0·46	1	0·75	1·24	Nil	Nil	1·94
		Kalaroa	Nil	Nil	0·45	1	0·75	0·99	Nil	Nil	2·45
		Paikgachha (Rarull)	Nil	Nil	0·57	2	0·39	1·29	Nil	Nil	1·98
		Mullahat ..	Nil	Nil	0·80	3	1·07	1·40	Nil	Nil	2·47
		Moreiganj ..	Nil	Nil	0·50	Nil	0·09	1·46	Nil	Nil	2·26
		Islamkati ..	Nil	Nil	0·45	2	0·80	1·25	1	0·44	2·32
		Total ..	1	0·58	5·33	16	7·02	14·12	6	1·80	24·39
		District average ..	0·09	0·05	0·44	1·46	0·64	1·18	0·55	0·16	2·08
Burdwan ..	Burdwan ..	Kalna	Nil	0·06	0·39	2	1·03	1·14	Nil	Nil	1·56
		Burdwan (Obsy.) ..	1	0·25	0·36	4	1·97	1·25	Nil	Nil	1·67
		Katwa	1	0·70	0·40	2	1·04	1·09	Nil	Nil	1·34
		Asansol (Obsy.) ..	1	0·42	0·68	3	2·17	1·04	Nil	Nil	1·05
		Raniganj ..	1	0·42	0·43	3	1·23	0·92	Nil	Nil	1·32
		Mangalkot ..	Nil	Nil	0·07	1	0·33	0·65	Nil	Nil	2·35
		Koyna	1	0·15	0·01	3	2·02	1·13	Nil	Nil	2·08
		Monteswar ..	1	0·39	0·00	4	1·40	1·51	Nil	Nil	1·69
		Total ..	6	2·39	2·34	22	11·19	8·73	Nil	Nil	13·06
		District average ..	0·75	0·30	0·29	2·75	1·40	1·09	Nil	Nil	1·63
	Birbhum ..	Suri	3	0·61	0·40	2	0·72	0·86	Nil	Nil	1·04
		Hetampur ..	Nil	0·04	0·54	2	1·06	0·91	Nil	Nil	0·93
		Rampurhat ..	3	0·69	0·47	2	1·80	0·79	Nil	Nil	0·89
		Bolpur	1	0·82	0·41	2	1·77	0·72	Nil	Nil	0·98
		Murarai	2	0·87	0·35	2	0·24	0·59	Nil	Nil	0·94
		Labpur	1	0·74	0·30	2	0·67	0·54	Nil	Nil	1·07
		Nalhati	2	0·55	(n)	3	0·75	(n)	Nil	Nil	(n)
		Mayureswar (b) ..	..	..	(n)	..	..	(n)	..	..	(n)
		Total ..	10	3·77	2·47	12	6·26	4·41	Nil	Nil	5·85
		District average ..	1·67	0·63	0·41	2·00	1·04	0·73	Nil	Nil	0·97

NOTE.—The total and the average rainfall for all districts have been calculated using the date of only those stations for which normals are available.

(a) Under repair.
(b) Established only from May 1934.
(n) Not ascertained.

Province of Bengal for the year 1934.

April.			May.			June.			July.		
Number of rainy days.	Rainfall.	Normal rainfall.	Number of rainy days.	Rainfall.	Normal rainfall.	Number of rainy days.	Rainfall.	Normal rainfall.	Number of rainy days.	Rainfall.	Normal rainfall.
Nil	0·08	1·14	3	0·92	4·41	9	7·12	11·54	19	8·67	14·65
3	0·91	1·70	3	2·26	5·40	13	10·85	11·68	13	11·85	14·78
6	2·00	2·32	6	2·38	5·93	16	11·44	12·79	18	8·99	13·85
3	2·20	1·95	4	3·84	5·94	12	12·97	11·87	15	10·95	12·22
4	1·95	1·89	4	2·55	5·75	9	7·69	11·90	16	8·91	12·51
3	1·90	2·09	3	1·35	5·49	20	11·13	10·42	21	9·19	12·23
3	1·90	2·15	6	3·57	5·69	10	8·70	11·38	19	9·65	12·26
4	1·10	2·30	5	1·98	5·55	7	5·54	10·53	9	7·94	11·44
3	1·30	2·71	6	3·10	6·06	13	11·77	12·01	20	10·06	13·58
1	0·30	(n)	4	1·51	(n)	13	8·47	(n)	13	8·76	(n)
29	13·29	18·25	40	21·45	50·22	109	86·71	104·12	152	85·71	117·52
3·22	1·48	2·03	4·45	2·38	5·58	12·11	9·63	11·57	16·89	9·52	13·06
5	1·70	2·98	6	2·68	6·17	9	7·67	10·03	23	9·33	10·75
4	2·52	2·56	8	4·43	7·00	11	6·50	10·66	17	8·27	11·08
6	1·96	2·95	11	7·54	7·47	17	15·67	10·59	14	7·89	10·24
5	2·26	3·06	10	6·45	6·17	17	16·97	10·30	11	3·57	10·56
8	2·17	2·96	10	9·20	7·40	18	37·76	10·85	22	16·17	10·15
4	1·15	2·00	4	1·33	4·18	14	8·46	7·27	17	7·62	7·07
32	11·76	16·10	49	31·63	38·39	86	93·03	59·70	104	52·85	59·85
5·33	1·96	2·75	8·17	5·27	6·40	14·33	15·50	9·95	17·33	8·81	9·97
3	1·95	1·80	9	4·43	4·83	7	5·80	10·51	11	7·49	11·72
3	2·48	1·40	8	2·46	5·51	11	5·03	10·04	9	4·32	10·85
3	1·54	1·50	7	2·22	5·55	12	7·01	10·51	13	6·72	12·07
5	2·51	1·54	6	2·87	5·19	7	3·79	10·31	11	4·38	10·91
3	2·00	1·33	7	2·85	4·79	10	9·17	10·35	14	9·07	11·18
5	0·98	1·37	7	4·04	5·09	11	7·64	10·06	8	4 54	10·94
3	1·03	1·50	6	2·94	6·04	13	10·10	11·85	11	4·80	10·77
5	3·35	1·91	6	6·89	5·64	13	9·79	9·55	13	8·55	9·02
4	0·95	1·79	7	1·88	5·64	12	7·88	10·57	9	4·52	10·52
3	2·25	1·41	6	2·37	4·67	8	4·09	11·98	9	7·21	10·09
3	1·10	(n)	5	2·99	(n)	9	6·89	(n)	12	8·09	(n)
5	2·95	(n)	4	4·77	(n)	10	7·45	(n)	11	5·68	(n)
37	19·04	15·55	69	32·95	53·95	104	70·30	105·23	108	61·60	108·07
3·70	1·90	1·56	6·90	3·30	5·40	10·40	7·03	10·52	10·80	6·16	10·81
8	8·95	3·86	11	15·90	7·19	20	25·40	12·04	22	20·55	10·69
5	1·80	3·66	10	4·56	8·08	16	15·57	12·67	19	8·89	12·20
5	2·74	3·22	10	5·73	7·24	16	17·46	12·51	15	6·45	10·38
4	3·70	3·98	10	8·80	8·18	11	11·20	11·48	15	9·85	10·92
7	3·38	2·96	7	4·96	6·34	9	10·24	10·81	15	8·79	11·21
29	20·57	17·68	48	39·95	36·98	72	79·87	59·51	86	54·53	55·40
5·80	4·11	3·53	9·60	7·99	7·39	14·40	15·97	11·91	17·20	10·91	11·08
1	0·30	2·85	6	2·52	8·26	18	14·46	13·90	18	8·56	11·37
4	1·36	3·58	7	4·81	7·09	17	19·48	14·14	28	12·38	14·76
4	3·36	3·27	8	5·74	10·33	17	16·82	13·88	22	12·65	11·05
2	0·38	3·77	6	3·96	7·39	20	14·27	14·62	22	8·69	17·09
..	..	2·58	..	..	5·84	9	6·30	13·31	14	7·90	12·76
3	1·25	4·04	8	3·24	7·47	19	15·65	13·08	26	11·61	15·09
1	0·65	2·91	3	4·75	7·33	15	11·77	12·60	16	8·46	14·44
3	2·11	3·57	4	1·66	8·13	14	20·27	11·47	19	8·53	12·75
1	0·50	3·72	6	1·97	7·28	13	11·86	12·71	14	9·15	14·76
6	3·69	5·77	11	13·41	8·53	15	17·06	14·49	20	15·55	16·28
2	0·40	4·57	1	1·42	9·20	15	13·01	15·81	21	9·75	17·45
Nil	Nil	3·49	4	2·61	7·25	15	18·45	11·95	21	11·82	15·06
27	14·00	44·12	64	45·59	94·10	178	173·10	161·96	222	117·15	173·46
2·45	1·27	3·68	5·82	4·14	7·84	16·18	15·74	13·50	20·18	10·65	14·46
2	1·63	2·73	6	2·51	5·65	11	7·44	10·32	15	7·68	11·33
5	2·51	2·11	4	3·12	6·18	10	12·56	10·24	11	6·94	12·57
2	2·19	1·72	11	5·80	5·41	11	5·78	10·02	14	9·66	11·13
3	2·11	0·78	3	0·88	3·26	14	5·91	11·71	15	8·23	13·76
5	4·59	1·43	1	0·61	4·48	9	6·10	9·60	14	8·70	11·03
3	2·78	1·61	5	2·68	5·09	12	7·97	12·86	15	4·66	8·03
6	2·53	1·56	2	2·21	47·70	14	7·61	10·86	8	9·12	11·84
5	6·69	0·56	11	1·77	3·73	9	9·28	12·61	18	11·75	9·17
31	25·03	12·50	43	19·58	38·45	90	62·65	88·22	110	66·74	88·86
3·87	3·13	1·56	5·37	2·45	4·81	11·25	7·83	11·03	13·75	8·34	11·11
2	3·16	1·02	5	2·90	3·82	14	13·25	10·73	15	8·22	12·88
1	1·30	1·06	2	0·64	3·80	12	8·88	10·35	19	6·93	12·74
2	1·43	1·35	4	1·78	4·33	8	6·05	10·57	12	5·33	11·50
5	1·71	1·06	3	1·93	3·84	11	13·95	9·43	17	9·51	11·14
3	0·72	1·19	3	1·16	5·09	11	7·22	12·23	6	6·92	14·81
2	2·10	1·41	3	0·70	4·55	8	6·30	10·49	12	8·62	11·45
2	0·90	(n)	4	1·73	(n)	10	9·54	(n)	7	9·64	(n)
..	..	(n)	2	1·70	(n)	5	2·49	(n)	15	7·84	(n)
15	10·42	7·09	20	9·11	25·43	64	55·65	63·80	81	45·53	74·58
2·50	1·74	1·18	3·33	1·52	4·24	10·67	9·27	10·65	13·50	7·59	12·43

(n) Not ascertained.

Monthly and Annual Rainfall Table in the

Division.	District.	Station.	August.			September.		
			Number of rainy days.	Rainfall.	Normal rainfall.	Number of rainy days	Rainfall	Normal rainfall.
Presidency ..	24-Parganas ..	Sangar Island (Obsy.)	17	18 92	14 18	13	11 10	10·76
		Diamond Harbour ..	21	13·82	13 73	15	10 39	10·35
		Budge-Budge ..	22	17 35	12·80	15	10·78	10 17
		Canning Town ..	21	18 60	13 48	13	14 07	9 90
		Alipore (Obsy.) ..	22	14 10	11·69	17	12 42	9 87
		Barrackpore ..	28	10 45	11·41	20	12 63	8·62
		Dum-Dum ..	19	13 65	11·81	14	9 11	9·74
		Baraset ..	12	4 65	11·62	17	11 05	9·05
		Basirhat ..	16	12 07	11 98	12	6 07	8·81
		Gosaba ..	17	14 10	(n)	17	10 77	(n)
		Total ..	178	129 61	113·70	136	97·62	87·27
		District average ..	19·78	13·74	12·63	15·11	10 85	9·70
	Nadia ..	Ranaghat ..	14	7·90	11·77	9	5·10	8·71
		Krishnagar (Obsy.) ..	16	6 44	10·17	12	5·97	8 03
		Chuadanga ..	15	8 39	11·08	11	9·14	8·62
		Meherpur ..	12	5·85	11·09	8	6 06	8·08
		Kushtia ..	17	16·70	10·09	8	17·29	9·05
		Haringhata ..	18	6·81	6·04	9	5·28	4·06
		Total ..	92	52 09	61·14	57	48·84	46 53
		District average ..	15 34	8·68	10·19	9·50	8·14	7·75
	Murshidabad ..	Kandi	10	3 36	11 24	8	4 62	9·21
		Berhampore (Obsy.) ..	14	6 14	11 95	9	5·66	10 12
		Lalbagh	8	4 58	13·11	8	5·56	10·61
		Azimgunj ..	15	6 83	11·35	9	5·37	9 14
		Jangipur ..	12	5 89	11·51	11	9 40	10 02
		Lalgola ..	11	6 72	10·66	6	5 47	9·85
		Akriganj ..	14	7·72	9·93	9	4 17	8·69
		Patkabari ..	10	7·65	8·39	6	2·55	7·02
		Dumkal ..	10	4 76	10·77	4	2 59	9·00
		Kallyangunj (Ishanpur)	12	4 26	12·65	12	6 79	8 81
		Khargram ..	12	5 15	(n)	9	7·00	(n)
		Bharatpore ..	14	4 65	(n)	9	9 18	(n)
		Total ..	116	57 91	111 56	82	52 18	92 47
		District average ..	11 60	5 79	11 16	8 20	5·22	9 25
	Jessore ..	Narail	19	8 72	10·23	12	7·50	7·60
		Jessore (Obsy.) ..	13	6·45	10 95	10	5 21	8·55
		Jhenida	12	4·51	10·99	16	6 60	9 15
		Magura	12	5·75	9 02	9	6·50	8·59
		Bongaon ..	14	4·22	11 65	9	4 24	9 02
		Total ..	70	29 65	53·74	56	30·05	42·91
		District average ..	14 00	5 93	10·74	11 20	6 01	8 58
	Khulna ..	Satkhira (Obsy.) ..	17	10·70	10·65	13	7·31	8·91
		Bagerhat ..	18	10·75	12·27	12	4 36	9·32
		Khulna (Obsy.) ..	17	8 01	11·46	10	6·40	7·74
		Kaliganj ..	20	13 45	16·11	19	6·56	12·17
		Nakipur (a) ..	18	9·28	12 29	15	7 46	9·05
		Dumuria ..	19	8·29	14 29	12	5·01	10·29
		Rampal	22	10·40	13·16	8	5·73	9 21
		Kalaroa	20	15·44	11 61	11	3·80	8 79
		Paikgachha (Karuli) ..	12	5·95	13 69	10	9 69	10·03
		Mullahat ..	11	6 94	15 85	11	7·51	11·58
		Moreiganj ..	22	9·73	14 28	19	12 89	12·02
		Islamkati ..	19	9·70	10·94	10	6 10	10·43
		Total ..	197	109 36	156 60	135	75 36	119 64
		District average ..	17 91	9·94	13·05	12 27	6 85	9 97
Burdwan ..	Burdwan ..	Kalna	12	6 04	10 70	8	5·03	7 68
		Burdwan (Obsy.) ..	18	8·05	11 26	11	10 91	8 60
		Katwa	10	6 72	11 07	6	3 50	8 07
		Asansol (Obsy.) ..	17	13 50	11 81	12	9 62	8 36
		Mankar	16	8·47	11·76	9	5·12	8·87
		Mangalkot	8	6·97	10 33	9	11 92	7·68
		Royna	15	10·34	9 25	5	6 49	7·81
		Monteswar	10	5·98	15·87	5	4 02	7·90
		Total ..	106	64 07	92 05	65	55·71	64 97
		District average ..	13·25	8 01	11·51	8 13	6 96	8·12
	Birbhum ..	Suri	17	9 27	12 75	10	7·03	9·57
		Hetampur	15	7·78	13 32	12	7·36	8 98
		Rampurhat	26	8 32	11 91	9	6·80	9 91
		Bolpur	16	8 90	10·74	8	7·83	8·00
		Murarai	7	8 43	12·16	9	9·68	10·83
		Labpur	12	5 05	11·88	7	8·52	8 82
		Nalhati	17	10·56	(n)	7	4·72	(n)
		Mayureswar (b) ..	11	5 23	(n)	12	5·95	(n)
		Total ..	93	47 75	71·76	55	47·22	56 11
		District average ..	15·50	7 96	11 96	9 17	7 87	9 35

(a) Under repair.
(b) Established only from May 1934.
(n) Not ascertained.

Province of Bengal for the year 1934.

October.			November.			December.			Annual.		
Number of rainy days.	Rainfall.	Normal rainfall.	Number of rainy days.	Rainfall.	Normal rainfall.	Number of rainy days.	Rainfall.	Normal rainfall.	Number of rainy days.	Rainfall.	Normal rainfall.
9	6·03	8·14	2	0·48	1·47	2	1·08	0·27	74	54·35	69·41
7	6·80	5·20	1	0·24	0·91	1	0·13	0·18	77	56·47	67·44
9	5·45	4·81	2	1·03	0·65	1	0·53	0·21	95	60·02	67·22
9	6·68	4·70	Nil	Nil	1·13	1	0·50	0·08	78	69·31	64·21
8	5·36	4·19	2	0·86	0·66	2	0·31	0·20	87	54·39	62·54
5	1·85	3·82	2	0·30	0·71	1	0·25	0·31	103	49·05	58·42
7	5·28	4·45	1	1·07	0·61	Nil	Nil	0·18	82	54·22	61·34
9	3·70	4·31	1	0·10	0·58	1	0·10	0·19	65	36·16	58·85
6	6·56	4·60	1	1·34	0·63	1	0·22	0·24	79	52·80	63·71
6	8·99	(n)	1	0·25	(n)	1	0·17	(n)	74	53·79	(n)
69	47·71	44·42	12	5·42	7·35	10	3·12	1·86	740	486·77	573·14
7·67	5·30	4·91	1·33	0·60	0·82	1·11	0·35	0·21	82·22	54·09	63·69
5	1·00	3·60	2	1·30	0·69	2	0·80	0·16	78	38·66	58·11
7	5·12	4·38	1	0·13	0·98	1	0·28	0·09	80	41·09	58·40
7	5·28	4·35	Nil	0·17	0·90	1	0·43	0·13	85	58·30	59·58
6	4·91	4·12	2	0·57	0·60	3	0·47	0·14	76	48·40	57·16
6	6·44	4·49	4	3·61	0·69	3	0·50	0·13	101	111·84	58·59
6	2·60	2·51	2	1·29	0·32	1	0·20	0·16	77	35·17	36·32
37	29·35	23·45	11	7·07	4·18	11	2·68	0·81	497	333·46	328·16
6·17	4·23	3·91	1·83	1·18	0·70	1·83	0·45	0·13	82·83	55·58	54·69
3	1·24	3·78	1	0·39	0·71	3	2·33	0·12	59	33·27	56·40
1	0·36	4·20	Nil	0·04	0·62	4	2·43	0·12	62	30·46	57·11
2	0·64	4·56	Nil	Nil	0·66	2	2·78	0·10	58	33·21	60·72
4	1·84	4·02	Nil	Nil	0·46	3	2·64	0·09	63	32·19	55·10
5	2·74	3·82	Nil	0·05	0·46	2	1·08	0·09	70	45·13	55·54
4	2·01	3·97	Nil	Nil	0·46	2	2·74	0·09	60	36·82	54·72
4	2·36	3·76	1	0·15	0·50	3	4·15	0·06	70	40·55	54·70
5	1·66	3·29	Nil	Nil	0·70	3	1·72	0·07	68	43·61	47·33
3	1·86	3·39	1	0·14	0·63	2	1·09	0·14	57	27·17	54·80
3	3·21	4·70	Nil	0·02	0·69	4	3·04	0·18	62	36·07	57·38
3	2·05	(n)	Nil	Nil	(n)	2	4·50	(n)	59	38·99	(n)
2	1·53	(n)	Nil	Nil	(n)	3	0·91	(n)	63	38·22	(n)
84	17·92	39·39	3	0·79	5·89	28	24·00	1·01	624	358·48	553·80
3·40	1·79	3·94	0·30	0·08	0·59	2·80	2·40	0·10	62·40	35·85	55·38
8	11·49	4·47	2	5·93	0·80	2	1·10	0·17	108	106·54	60·78
6	5·81	4·89	2	1·81	1·02	2	0·69	0·20	85	51·29	60·03
6	7·68	4·45	3	0·47	0·74	1	0·29	0·14	87	53·57	62·54
7	4·00	4·25	2	1·05	0·78	1	0·95	0·14	76	53·40	61·69
6	6·85	4·62	2	1·54	0·56	1	0·17	0·24	73	45·50	60·74
33	35·83	22·68	11	10·80	3·90	7	3·20	0·89	429	310·30	311·78
6·60	7·17	4·53	2·20	2·16	0·78	1·40	0·64	0·18	85·80	62·06	62·37
9	10·61	3·23	2	1·57	0·65	2	0·86	0·27	87	56·73	62·49
8	9·84	5·13	5	2·25	0·97	1	1·00	0·16	98	67·10	71·02
11	7·98	3·12	4	3·08	1·07	1	0·64	0·43	98	66·67	66·06
11	8·21	6·94	5	0·96	0·79	2	1·00	0·11	110	58·24	83·41
11	9·32	5·13	2	1·20	0·96	2	1·03	0·09	71	42·49	64·87
8	5·48	4·84	4	1·93	0·81	1	0·59	0·12	102	56·30	73·70
5	8·80	5·19	1	0·31	1·06	Nil	Nil	0·13	72	51·62	69·77
11	7·75	5·32	3	2·11	0·55	1	0·24	0·14	87	62·66	66·22
7	8·81	6·06	3	3·44	0·77	Nil	Nil	0·14	68	51·76	73·00
9	11·17	5·86	3	2·31	1·08	1	3·33	0·19	90	82·04	83·80
10	9·06	6·14	Nil	Nil	1·31	Nil	Nil	0·16	90	56·35	85·16
7	6·89	5·44	2	1·43	0·80	Nil	Nil	0·14	81	58·24	69·52
96	94·60	62·40	32	19·99	10·82	9	7·16	2·08	983	665·71	869·02
8·73	8·60	5·20	2·91	1·82	0·90	0·82	0·65	0·17	89·36	60·52	72·42
7	2·73	3·74	1	0·29	0·86	2	1·28	0·15	66	35·72	56·25
5	1·86	3·43	1	0·30	0·80	1	2·79	0·15	71	50·36	58·63
3	1·75	3·98	2	1·00	0·65	3	0·57	0·12	65	38·71	55·00
5	1·15	4·56	1	0·40	0·69	Nil	0·07	0·24	74	44·46	57·94
5	1·78	2·87	1	0·29	0·68	3	1·57	0·12	67	36·88	53·51
1	0·19	5·13	Nil	Nil	1·03	3	1·07	0·01	57	38·57	54·84
2	0·89	5·78	1	0·17	0·89	1	2·08	0·16	58	43·61	56·07
5	2·29	5·62	Nil	Nil	0·26	Nil	Nil	0·00	68	43·57	58·92
33	12·64	35·11	7	2·45	5·92	13	9·43	0·95	526	331·88	451·16
4·13	1·58	4·39	0·87	0·31	0·74	1·63	1·18	0·12	65·75	41·49	56·40
4	2·95	3·40	Nil	0·03	0·42	Nil	0·08	0·07	72	48·22	56·96
4	1·74	3·18	Nil	0·03	0·49	1	0·42	0·08	68	36·18	55·38
5	2·40	3·78	Nil	Nil	0·48	3	2·25	0·10	74	36·85	56·14
5	1·75	3·32	1	0·19	0·55	2	1·16	0·05	71	49·52	50·24
2	1·85	3·65	Nil	Nil	0·45	Nil	Nil	0·05	45	37·09	62·34
3	2·39	3·91	Nil	Nil	0·58	2	0·70	0·04	52	35·79	55·04
2	2·00	(n)	Nil	Nil	(n)	2	1·25	(n)	49	30·92	(n)
4	1·85	(n)	Nil	Nil	(n)	Nil	0·11	(n)	49	24·67	(n)
23	13·08	21·24	1	0·25	2·97	8	4·61	0·39	382	243·65	336·10
3·83	2·18	3·54	0·17	0·04	0·49	1·33	0·77	0·07	63·67	40·61	56·02

(n) Not ascertained.

Monthly and Annual Rainfall Table in the

Division.	District.	Station.	January.			February.			March.		
			Number of rainy days.	Rainfall.	Normal rainfall.	Number of rainy days.	Rainfall.	Normal rainfall.	Number of rainy days.	Rainfall.	Normal rainfall.
Burdwan ..	Bankura * ..	Bankura (Obsy.) ..	1	0·25	0·51	1	0·93	1·04	Nil	Nil	1·25
		Vishnupur ..	1	0·14	0·37	1	0·48	1·21	Nil	Nil	1·39
		Mallara ..	1	0·80	0·47	2	1·72	0·96	Nil	Nil	0·99
		Khatra	Nil	0·11	0·44	2	1·09	1·09	Nil	Nil	1·18
		Indas	Nil	Nil	0·36	3	0·78	1·00	Nil	Nil	1·32
		Kotalpur ..	Nil	Nil	0·35	2	0·88	1·10	Nil	Nil	1·68
		Onda	Nil	Nil	0·31	1	1·21	0·06	Nil	Nil	0·98
		Gangajalghati ..	1	0·81	0·43	1	1·41	0·88	Nil	Nil	1·12
		Raipur	1	0·19	0·48	1	0·73	1·27	Nil	Nil	1·41
		Sonamukhi ..	1	0·22	0·42	1	0·75	1·21	Nil	Nil	1·37
		Taldangra ..	1	0·80	0·33	1	0·72	0·84	Nil	Nil	1·05
		Saranga	1	0·19	0·40	1	1·15	0·79	Nil	Nil	0·92
		Indpur	Nil	0·07	0·30	1	0·62	0·87	Nil	Nil	1·04
		Arhara* ..	1	0·40	(n)	2	0·46	(n)	Nil	Nil	(n)
		Barjora	1	0·78	(n)	2	0·95	(n)	Nil	Nil	(n)
		Simlapal ..	1	0·18	(n)	1	0·80	(n)	Nil	Nil	(n)
		Mejia	1	0·49	(n)	2	1·80	(n)	Nil	Nil	(n)
		Siromanipur ..	Nil	Nil	(n)	Nil	Nil	(n)	Nil	Nil	(n)
		Palasdanga ..	1	0·58	(n)	2	1·78	(n)	Nil	Nil	(n)
		Chatna	1	0·42	(n)	2	1·20	(n)	Nil	Nil	(n)
		Ranibandh ..	1	0·16	(n)	2	2·73	(n)	Nil	Nil	(n)
		Saltora	1	0·34	(n)	2	1·37	(n)	Nil	Nil	(n)
		Toypur	1	0·20	(n)	2	0·56	(n)	Nil	Nil	(n)
		Ambikanagar ..	Nil	Nil	(n)	Nil	Nil	(n)	Nil	Nil	(n)
		Joyrampur ..	Nil	Nil	(n)	1	0·16	(n)	Nil	Nil	(n)
		Total ..	8	8·58	5·17	18	12·47	13·32	Nil	Nil	15·70
		District average ..	0·62	0·28	0·40	1·38	0·96	1·02	Nil	Nil	1·21
	Midnapore ..	Contai	Nil	Nil	0·46	Nil	Nil	1·29	Nil	Nil	1·38
		Tamluk (c) ..	Nil	Nil	0·39	Nil	Nil	1·17	Nil	Nil	1·78
		Midnapore (Obsy.) ..	Nil	0·04	0·46	1	0·91	1·20	Nil	0·08	1·43
		Ghatal	Nil	Nil	0·36	1	0·51	0·95	Nil	0·01	1·65
		Kukrahati ..	Nil	Nil	0·49	Nil	Nil	1·19	Nil	Nil	1·67
		Amlagura ..	1	0·11	0·41	3	1·31	1·13	Nil	Nil	1·61
		Panskura ..	Nil	Nil	0·49	1	0·10	1·18	Nil	0·07	1·58
		Dantan	Nil	Nil	0·47	1	1·55	1·19	Nil	Nil	1·52
		Chandrakona ..	Nil	Nil	0·21	Nil	Nil	1·07	Nil	Nil	1·47
		Pachet	Nil	Nil	0·27	Nil	0·07	0·95	Nil	Nil	2·18
		Bhagwanpur ..	Nil	Nil	0·27	1	0·10	1·03	Nil	Nil	1·75
		Kashiary ..	Nil	Nil	0·29	1	1·56	1·17	Nil	Nil	2·03
		Nayabasan ..	Nil	Nil	0·47	1	1·25	0·65	Nil	Nil	0·89
		Silda (Belpahari) ..	Nil	0·05	0·39	2	0·64	1·05	Nil	Nil	1·15
		Goaltore	1	0·20	0·28	1	0·96	0·82	Nil	Nil	1·08
		Salboni	1	0·41	0·02	Nil	Nil	0·88	Nil	Nil	0·96
		Narayangarh ..	Nil	Nil	0·65	2	0·50	0·89	Nil	Nil	1·35
		Ramnagar ..	Nil	Nil	0·33	1	0·16	0·98	Nil	Nil	1·69
		Mohanpur ..	Nil	Nil	0·29	1	0·35	0·93	Nil	Nil	2·37
		Jenka (Khajri) ..	Nil	Nil	0·21	Nil	Nil	0·83	Nil	Nil	1·49
		Nandigram ..	Nil	Nil	0·34	Nil	Nil	0·99	Nil	Nil	1·90
		Moyna	Nil	Nil	0·11	Nil	Nil	1·49	Nil	Nil	1·69
		Pingla (d) ..	Nil	Nil	0·17	1	0·50	2·25	Nil	Nil	1·89
		Narajole	1	0·20	0·19	Nil	Nil	1·50	Nil	Nil	2·93
		Kolaghat (Dainan) ..	Nil	Nil	(n)	Nil	Nil	(n)	Nil	0·01	(n)
		Balichak ..	Nil	Nil	(n)	1	0·80	(n)	Nil	Nil	(n)
		Jhargram ..	Nil	0·07	(n)	2	1·28	(n)	Nil	Nil	(n)
		Kharagpur ..	Nil	Nil	(n)	2	0·53	(n)	Nil	Nil	(n)
		Total ..	4	1·01	8·02	17	9·97	26·78	Nil	0·16	39·44
		District average ..	0·18	0·04	0·33	0·77	0·45	1·12	Nil	0·01	1·64
	Hooghly ..	Serampore ..	Nil	0·06	0·38	2	0·38	1·21	Nil	Nil	1·43
		Hooghly	Nil	Nil	0·34	3	1·42	1·21	Nil	Nil	1·51
		Arambagh ..	Nil	0·04	0·40	2	0·96	1·07	Nil	Nil	1·40
		Chanditala ..	Nil	Nil	(n)	2	0·85	(n)	Nil	Nil	(n)
		Tentulia	1	0·18	(n)	3	1·69	(n)	Nil	Nil	(n)
		Boinchee	Nil	Nil	(n)	4	1·24	(n)	Nil	Nil	(n)
		Khanakul	1	0·10	(n)	3	1·47	(n)	Nil	0·09	(n)
		Tarakeswar ..	Nil	0·05	(n)	2	0·96	(n)	Nil	Nil	(n)
		Total ..	Nil	0·10	1·12	7	2·76	3·49	Nil	Nil	4·34
		District average ..	Nil	0·03	0·37	2·33	0·92	1·16	Nil	Nil	1·45
	Howrah ..	Howrah	Nil	Nil	0·40	Nil	Nil	1·11	Nil	0·03	1·36
		Uluberia	Nil	Nil	0·42	Nil	Nil	1·11	Nil	Nil	1·44
		Amta	Nil	Nil	0·41	Nil	Nil	1·49	Nil	Nil	2·41
		Total ..	Nil	Nil	1·23	Nil	Nil	3·71	Nil	0·03	5·21
		District average ..	Nil	Nil	0·41	Nil	Nil	1·24	Nil	0·01	1·74
	Boalia .	Boalia (Obsy.) ..	3	1·15	0·35	4	1·61	0·58	Nil	Nil	1·20
		Nator	3	1·02	0·47	3	1·44	0·74	Nil	Nil	1·00
		Naugaon	3	0·98	0·35	2	1·14	0·71	Nil	Nil	1·01
		Lalpur	Nil	0·10	0·32	Nil	0·05	0·78	Nil	Nil	1·16
		Manda	3	1·40	0·43	2	1·53	0·57	Nil	Nil	0·70
		Mahadebpur ..	2	0·92	0·39	3	1·20	0·67	Nil	Nil	0·85
		Tanor	2	3·68	0·58	4	1·47	0·52	Nil	Nil	0·74
		Chaugram	4	5·46	(n)	3	1·52	(n)	Nil	Nil	(n)
		Joari	1	0·25	(n)	2	1·65	(n)	Nil	Nil	(n)
		Badalgachi ..	3	0·60	(n)	2	0·88	(n)	Nil	Nil	(n)
		Total ..	16	9·25	2·89	18	8·44	4·57	Nil	Nil	6·66
		District average ..	2·28	1·32	0·41	2·57	1·21	0·65	Nil	Nil	0·95

*Report for October not received.

(c) Tamluk was under repair in May and June 1934.

(d) Pingla was under repair since July 1934.

Province of Bengal for the year 1934.

April.			May.			June.			July.		
Number of rainy days.	Rainfall.	Normal rainfall.	Number of rainy days.	Rainfall.	Normal rainfall.	Number of rainy days.	Rainfall.	Normal rainfall.	Number of rainy days.	Rainfall.	Normal rainfall.
3	0·84	1·32	1	0·46	4·84	9	8·55	11·09	13	7·61	13·11
5	1·38	1·57	2	3·62	4·76	12	7·37	10·02	13	7·49	11·68
1	0·50	1·05	3	1·26	3·83	13	5·98	10·06	17	9·05	11·64
2	1·91	1·26	4	2·32	3·86	8	4·52	11·01	12	6·00	12·13
6	1·93	1·76	1	1·15	5·26	10	4·74	9·86	18	11·40	11·25
5	2·36	2·00	Nil	Nil	5·19	8	6·15	10·02	17	10·12	12·80
3	1·35	1·13	2	0·30	3·06	6	5·86	8·20	13	8·30	9·68
Nil	Nil	1·09	3	0·96	3·57	9	6·02	10·62	15	12·77	11·87
3	1·95	1·59	5	3·38	5·12	10	5·09	10·18	15	11·12	12·22
6	2·22	1·34	3	2·00	4·78	13	8·82	9·77	19	14·50	12·43
2	2·35	0·96	3	2·97	3·18	10	7·87	8·40	15	12·89	10·64
5	1·91	1·60	5	4·21	5·64	7	5·91	11·05	15	13·91	9·93
1	0·20	0·74	2	0·35	3·89	11	7·61	8·78	16	8·04	10·19
2	0·43	(n)	2	0·42	(n)	11	8·30	(n)	18	9·84	(n)
Nil	Nil	(n)	3	1·99	(n)	9	5·83	(n)	19	8·27	(n)
4	2·95	(n)	2	0·70	(n)	13	6·55	(n)	19	7·25	(n)
2	0·32	(n)	2	0·76	(n)	9	5·07	(n)	13	7·80	(n)
1	0·50	(n)	Nil	Nil	(n)	8	4·29	(n)	20	11·60	(n)
4	1·62	(n)	3	1·56	(n)	10	5·70	(n)	17	9·53	(n)
2	0·75	(n)	1	0·85	(n)	13	6·73	(n)	17	9·79	(n)
2	1·11	(n)	3	2·20	(n)	10	4·34	(n)	8	3·19	(n)
1	0·13	(n)	1	0·40	(n)	17	11·00	(n)	12	6·37	(n)
3	1·42	(n)	2	2·26	(n)	10	3·36	(n)	17	9·54	(n)
Nil	Nil	(n)	Nil	Nil	(n)	3	0·86	(n)	8	2·59	(n)
2	0·50	(n)	1	0·15	(n)	12	7·02	(n)	17	12·39	(n)
42	18·90	17·41	34	22·98	56·98	126	84·49	128·56	198	133·20	149·16
3·23	1·46	1·34	2·62	1·77	4·38	9·69	6·50	9·89	15·23	10·25	11·47
Nil	0·08	1·33	2	1·62	5·12	11	7·21	10·48	18	12·97	13·26
2	1·05	1·72	..	..	5·03	..	..	10·62	6	3·84	12·41
2	1·25	1·87	4	1·47	5·32	13	7·65	10·50	14	10·20	12·53
4	2·58	2·02	7	3·84	5·28	11	7·50	10·13	15	6·30	12·20
1	0·32	1·48	3	3·02	5·43	15	8·53	12·31	14	7·45	14·49
3	1·68	1·97	3	3·30	4·71	12	10·07	10·34	17	10·08	11·79
2	0·85	2·02	5	2·60	5·58	14	11·29	10·92	16	6·69	11·79
Nil	Nil	1·94	4	2·48	4·83	12	9·15	10·44	13	7·18	10·85
2	2·50	1·78	4	1·65	4·96	11	8·07	12·58	12	7·01	12·15
2	0·86	1·27	2	1·89	5·22	9	4·61	11·82	11	7·20	12·46
2	0·97	2·14	3	1·65	4 91	10	10·42	14·26	12	5·49	10·90
2	1·38	1·69	4	4·65	4·82	15	11·84	10·64	19	11·82	10·28
4	1·87	1·58	3	2·03	5·68	14	8·91	10·65	16	9·24	10·23
4	2·39	2·21	2	0·90	4·66	10	7·75	10·67	12	4 73	10·09
2	2·36	1·88	5	4·47	5·01	8	5·29	10·81	16	8·57	11·18
5	2·85	1·45	3	1·46	4·77	9	9·48	12·30	9	5·47	10·54
3	2·00	2·73	4	4·06	8·54	10	8·65	13·27	10	5·88	12·95
Nil	0·04	1·04	3	4·17	5·19	12	5·78	13·87	16	8·55	9·64
1	0·16	1·44	3	2·25	5·39	15	10 04	11·01	17	8·50	12·40
1	0·22	1·56	3	1·06	5·46	14	7·91	14·85	16	12·21	10·85
Nil	Nil	1·43	Nil	Nil	5·11	9	3·30	13·78	12	4·60	10·69
1	1·20	1·61	2	2·15	5·39	13	7·55	11·28	18	5·71	12·18
1	0·50	1·43	1	0·20	5·38	7	3·20	11·83	..	..	10·79
5	1·00	2·30	5	1·60	5·97	16	8·20	14·62	15	9·40	12·21
6	1·30	(n)	4	1·43	(n)	10	6·86	(n)	16	6·45	(n)
4	1·80	(n)	4	2·29	(n)	13	7·72	(n)	11	4·15	(n)
5	3·60	(n)	4	2·23	(n)	13	10·49	(n)	12	10·74	(n)
2	1 16	(n)	1	0·64	(n)	12	7·19	(n)	14	7·44	(n)
46	26·56	41·89	75	52·26	127·71	263	179·20	283·98	318	175·25	278·46
2·09	1·21	1·75	3·41	2·37	5,32	11·96	8·15	11·83	14·46	7·97	11·60
5	2·30	2·17	5	2·74	5·20	11	6·34	9·94	19	5·45	12·05
5	3·06	2·57	5	5·09	6·00	11	9·79	9·87	17	5·88	10·97
4	1·24	1·96	7	3·35	5·53	9	8·42	9 90	19	8·87	12·51
4	3·80	(n)	3	2·02	(n)	8	6·86	(n)	10	8·01	(n)
5	1·81	(n)	6	2·89	(n)	12	10·22	(n)	12	7·10	(n)
4	3·30	(n)	6	1·90	(n)	10	9·85	(n)	16	8·38	(n)
4	2·90	(n)	8	7·66	(n)	11	22·76	(n)	14	7·73	(n)
4	2·31	(n)	7	5·95	(n)	13	5·75	(n)	18	8·65	(n)
14	6·60	6·50	17	11·18	16·73	31	24·55	29·71	55	20·20	35·53
4·67	2·20	2·17	5·67	3·73	5·58	10·33	8·19	9·90	18 33	6·73	11·84
5	2·58	2·08	7	4·31	5·03	8	8·68	11·21	20	9·34	12·14
4	3·50	2·03	6	3·94	5·46	15	14·11	11·20	19	9·58	12·48
5	2·30	2·47	6	3·27	6·11	14	9·15	12·54	14	8·75	12·47
14	8·33	6·53	19	11·52	16·60	37	31·94	34·95	53	27·67	37·09
4·67	2·78	2·18	6·33	3·84	5·53	12·34	10·65	11·65	17·67	9·22	12·36
2	0·43	1·78	5	2·41	5·57	14	9·41	11·17	7	2·95	10·81
5	2·19	2·29	8	3·77	7·02	14	8·03	11·10	14	8·42	12·22
1	0·40	1·53	5	4·45	6·04	12	7·37	12·76	14	10·33	11·92
3	0·85	2·19	7	4·43	6·63	13	12·83	10·92	11	7·75	11·41
2	2·11	1·38	5	1·80	5·26	18	11·42	10·90	10	11·62	12·38
3	1·20	1·25	6	3·10	5·63	13	9·50	11·80	12	8·31	11·97
4	1·60	1·27	7	3·16	5·10	13	8·28	10·35	5	2·05	10·63
2	0·59	(n)	7	5·20	(n)	11	8·90	(n)	14	6·30	(n)
4	3·55	(n)	8	6·39	(n)	16	13·78	(n)	17	6·01	(n)
2	1·20	(n)	4	4·40	(n)	12	6·23	(n)	9	8·20	(n)
20	8·78	11·69	43	23·12	41·25	97	67·74	70·09	73	51·43	81·34
2·86	1·20	1·67	6 14	3·30	5·89	13·86	9·67	11·30	10·43	7·35	11·62

(n) Not ascertained.

Monthly and Annual Rainfall Table in the

Division.	District.	Station.	August.			September.		
			Number of rainy days.	Rainfall.	Normal rainfall.	Number of rainy days.	Rainfall.	Normal rainfall.
Burdwan ..	Bankura ..	Bankura (Obsy.) ..	18	10·62	11·47	11	7·10	8·74
		Vishnupur ..	15	8·80	12·56	8	7·03	8·68
		Mallara ..	12	10·19	11·06	7	10·59	7·45
		Khatra	17	15·83	11·67	9	10·87	8·97
		Indas	14	7·59	10·14	8	5·15	8·43
		Kotalpur ..	10	6·96	11·66	8	6·29	8·22
		Onda	15	12·08	10·11	7	3·67	7·80
		Gangajalghati ..	16	10·61	10·96	10	12·35	7·89
		Raipur	19	11·95	12·24	12	6·14	8·93
		Sonamukhi ..	11	5·73	11·37	6	4·80	8·47
		Taldangra ..	13	17·89	10·33	8	10·02	7·11
		Saranga	13	8·67	12·36	7	4·54	7·59
		Indpur	19	9·64	11·08	10	7·98	7·21
		Arhara* ..	20	16·27	(n)	14	13·07	(n)
		Barjora	14	10·36	(n)	7	6·71	(n)
		Simlapal ..	16	12·75	(n)	8	4·95	(n)
		Mejia	17	16·32	(n)	14	14·04	(n)
		Siromanipur ..	12	4·74	(n)	10	4·78	(n)
		Palasdanga ..	14	13·00	(n)	6	5·56	(n)
		Chatna	18	12·83	(n)	10	12·95	(n)
		Ranibandh ..	17	12·01	(n)	5	2·70	(n)
		Saltora	16	8·27	(n)	13	11·32	(n)
		Joypur	17	8·32	(n)	9	6·69	(n)
		Ambikanagar ..	12	5·07	(n)	4	1·07	(n)
		Joyrampur ..	12	9·76	(n)	9	7·56	(n)
		Total ..	392	186·56	147·01	111	96·58	105·49
		District average ..	14·77	10·50	11·31	8·54	7·43	8·12
Burdwan .	Midnapore ..	Contai ..	19	18·97	12·54	13	9·21	10·90
		Tamluk (c) ..	16	13·20	12·62	10	8·83	8·96
		Midnapore (Obsy.) ..	20	10·17	12·22	8	6·27	8·75
		Ghatal	14	14·30	12·67	8	3·33	9·39
		Kukrahati ..	17	14·13	12·12	14	16·15	9·73
		Amlagura ..	15	12·10	12·82	9	7·94	8·75
		Panskura ..	19	14·92	11·30	13	10·21	8·71
		Dantan	19	9·57	11·47	15	8·83	8·75
		Chandrakona ..	13	11·81	11·81	5	3·20	8·89
		Pachet	14	9·32	11·38	9	8·46	9·21
		Bhagwanpur ..	18	10·75	11·41	11	12·14	7·88
		Kashiary ..	19	9·62	10·68	15	9·14	7·67
		Nayabasan ..	17	9·41	9·18	10	5·62	7·15
		Silda (Belpahari) ..	16	12·54	11·00	10	5·88	8·62
		Goaltore	17	10·11	11·15	9	6·09	8·27
		Salboni	15	12·35	8·80	4	2·85	8·16
		Narayangarh ..	14	7·92	11·00	13	7·32	7·92
		Ramnagar ..	19	21·50	11·40	12	10·23	10·14
		Mohanpur ..	19	14·21	10·05	13	11·55	9·73
		Jenka (Khajri) ..	19	18·15	12·55	12	12·69	9·67
		Nandigram ..	20	14·25	10·92	12	8·10	9·06
		Moyna	16	8·83	10·62	8	4·41	7·74
		Pingla (d) ..	..	..	10·44	..	..	7·35
		Narajole	19	10·00	13·59	15	4·00	9·26
		Kolaghat (Dainan) ..	20	11·88	(n)	14	7·37	(n)
		Balichak ..	21	10·05	(n)	14	9·33	(n)
		Jhargram ..	12	11·05	(n)	3	3·26	(n)
		Kharagpur ..	14	9·46	(n)	8	9·28	(n)
		Total ..	378	274·93	273·83	238	173·62	210·66
		District average ..	17·18	12·50	11·41	10·82	7·60	8·78
Burdwan ..	Hooghly ..	Serampore ..	19	7·98	11·06	11	7·73	8·77
		Hooghly ..	19	6·33	10·72	14	7·91	8·12
		Arambagh ..	14	10·16	12·44	8	2·88	8·74
		Chanditala ..	16	10·55	(n)	13	12·71	(n)
		Tentulia ..	12	5·53	(n)	9	3·82	(n)
		Boinchee ..	16	9·09	(n)	11	7·54	(n)
		Khanakul ..	18	19·28	(n)	6	3·09	(n)
		Tarakeswar ..	14	6·50	(n)	6	3·80	(n)
		Total ..	52	24·47	34·22	33	18·52	25·63
		District average ..	17·33	8·16	11·41	11·00	6·17	8·54
	Howrah .	Howrah ..	18	10·19	11·52	16	12·11	8·98
		Uluberia ..	21	18·42	11·78	15	10·95	7·92
		Amta ..	18	11·60	12·19	12	12·72	8·24
		Total ..	57	40·21	35·49	43	35·78	25·14
		District average ..	19·00	13·41	11·83	14·33	11·93	8·38
	Boalia ..	Boalia (Obsy.) ..	11	4·13	10·32	8	5·95	10·04
		Nator ..	12	5·82	11·47	10	8·58	10·60
		Naugaon ..	17	7·60	10·56	10	9·05	11·01
		Lalpur ..	11	5·20	11·31	9	7·10	10·27
		Manda ..	15	8·08	10·31	13	7·85	9·99
		Mahadebpur ..	11	4·28	11·86	14	6·03	10·74
		Tanor ..	15	9·58	9·41	5	11·17	7·29
		Chaugram ..	15	8·67	(n)	8	4·58	(n)
		Josri ..	13	7·25	(n)	11	8·85	(n)
		Badalgachi ..	10	9·47	(n)	8	10·30	(n)
		Total ..	92	44·69	75·24	69	55·73	69·74
		District average ..	13·14	6·39	10·75	9·86	7·96	9·99

*Report for October not received.

(c) Tamluk was under repair in May and June 1934.

(d) Pingla was under repair since July 1934.

Province of Bengal for the year 1934.

October.			November.			December.			Annual.		
Number of rainy days.	Rainfall.	Normal rainfall.	Number of rainy days.	Rainfall.	Normal rainfall.	Number of rainy days.	Rainfall.	Normal rainfall.	Number of rainy days.	Rainfall.	Normal rainfall.
4	2·94	2·91	2	0·54	0·64	1	0·12	0·08	64	39·96	57·00
4	3·24	3·05	1	0·26	0·61	1	0·50	0·13	63	40·81	56·03
2	1·86	2·99	Nil	Nil	0·44	2	1·92	0·11	60	43·87	51·05
5	3·18	3·30	1	0·15	0·70	1	0·30	0·17	61	46·28	55·78
5	2·52	2·79	1	0·17	0·62	1	0·95	0·10	67	36·38	52·39
2	1·04	3·31	1	1·09	0·75	2	0·93	0·10	55	35·82	57·27
2	2·82	2·83	Nil	Nil	0·45	1	0·40	0·08	50	35·99	45·69
2	1·99	2·75	1	0·57	0·60	1	0·54	0·08	59	48·03	51·36
4	3·32	3·61	1	0·38	0·67	1	0·11	0·15	72	44·36	57·87
4	2·56	3·07	1	0·10	0·71	Nil	Nil	0·10	65	41·70	55·04
2	1·27	5·23	Nil	Nil	0·82	Nil	Nil	0·00	55	56·78	48·89
4	2·04	4·23	Nil	Nil	0·91	Nil	0·01	0·00	58	42·54	55·42
2	0·50	5·01	Nil	Nil	0·69	1	0·40	0·00	63	35·41	49·80
..	..	(n)	1	0·56	(n)	1	0·24	(n)	72	49·99	(n)
3	0·90	(n)	2	1·10	(n)	2	1·04	(n)	62	38·53	(n)
4	2·77	(n)	1	0·28	(n)	Nil	Nil	(n)	69	39·18	(n)
4	1·97	(n)	1	1·03	(n)	Nil	Nil	(n)	65	49·70	(n)
5	4·29	(n)	1	0·22	(n)	1	0·16	(n)	58	30·58	(n)
3	2·00	(n)	2	0·70	(n)	2	2·85	(n)	64	44·88	(n)
5	2·17	(n)	1	0·55	(n)	Nil	Nil	(n)	70	48·24	(n)
2	2·69	(n)	Nil	0·02	(n)	Nil	0·02	(n)	50	31·17	(n)
2	0·80	(n)	1	0·50	(n)	Nil	Nil	(n)	66	40·50	(n)
6	3·09	(n)	Nil	Nil	(n)	Nil	Nil	(n)	67	35·44	(n)
5	1·03	(n)	4	1·16	(n)	6	1·70	(n)	42	14·08	(n)
4	2·68	(n)	1	0·21	(n)	1	0·50	(n)	60	40·93	(n)
42	29·28	45·08	9	3·26	8·61	12	6·18	1·10	792	547·43	693·59
3·23	2·25	3·47	0·69	0·25	0·66	0·92	0·48	0·08	60·92	42·11	53·35
6	5·98	7·01	1	0·33	1·27	1	0·13	0·23	71	56·50	65·27
7	4·98	4·35	2	1·82	0·66	Nil	Nil	0·18	43	33·72	59·89
4	2·13	3·64	2	0·55	0·88	1	0·10	0·25	69	40·82	59·05
3	3·38	3·44	1	0·87	0·71	Nil	0·03	0·19	64	42·65	58·99
8	7·13	5·04	1	0·35	0·90	Nil	Nil	0·08	73	57·08	63·93
4	2·38	3·36	2	0·77	0·87	Nil	0·04	0·16	70	49·78	57·92
7	5·35	3·65	2	1·10	1·06	1	0·20	0·16	80	53·38	58·44
5	5·25	4·91	2	1·04	1·04	2	0·72	0·13	73	45·72	57·54
4	4·10	3·83	Nil	Nil	0·80	Nil	Nil	0·34	51	38·34	59·89
8	4·12	5·31	3	1·29	0·80	Nil	Nil	0·05	58	37·81	60·02
6	3·67	5·79	1	0·83	0·88	2	0·51	0·14	66	40·53	61·36
5	4·39	5·86	3	3·21	1·10	1	1·63	0·05	84	59·24	56·28
6	3·85	3·61	1	0·23	2·17	1	1·45	0·33	73	43·86	52·59
3	2·74	3·88	1	0·33	0·67	Nil	0·11	0·10	60	38·06	55·18
3	1·66	4·63	1	0·31	0·60	1	0·40	0·18	64	40·42	55·89
2	1·18	4·16	Nil	Nil	1·25	Nil	Nil	0·21	48	36·05	53·50
6	3·78	5·46	2	1·30	1·70	2	1·04	0·23	66	42·45	66·69
8	4·74	8·66	1	1·56	1·78	1	0·22	0·03	73	56·95	64·75
8	7·49	7·87	1	0·25	1·08	1	0·21	0·01	79	55·01	62·57
8	3·68	7·27	2	0·32	1·55	1	0·40	0·06	76	56·64	66·35
6	5·45	6·92	Nil	Nil	1·05	Nil	Nil	0·03	59	35·70	62·22
4	3·21	5·21	2	1·28	1·21	Nil	Nil	0·02	64	34·34	58·55
..	..	5·21	..	..	0·69	..	..	0·01	10	4·40	57·39
11	2·40	6·39	Nil	Nil	0·98	Nil	Nil	0·15	87	36·80	70·09
5	3·68	(n)	2	0·87	(n)	1	0·32	(n)	78	40·17	(n)
5	4·16	(n)	2	1·21	(n)	1	0·52	(n)	76	42·03	(n)
3	3·09	(n)	Nil	0·12	(n)	Nil	0·05	(n)	54	45·98	(n)
3	1·95	(n)	2	0·82	(n)	1	0·58	(n)	59	39·05	(n)
125	88·06	125·46	29	15·92	25·70	15	7·19	3·32	1,508	1,004·13	1,445·25
5·68	4·00	5·23	1·32	0·72	1·07	0·68	0·33	0·14	68·55	45·64	60·22
8	4·43	4·09	2	0·92	0·61	Nil	0·06	0·20	82	38·39	57·11
6	5·46	3·87	2	1·40	0·66	1	1·50	0·27	83	47·84	55·91
5	2·72	3·77	1	0·27	0·56	1	1·04	0·15	70	39·95	58·43
6	5·51	(n)	Nil	Nil	(n)	Nil	Nil	(n)	62	50·81	(n)
3	4·60	(n)	2	1·20	(n)	Nil	Nil	(n)	65	39·04	(n)
7	2·80	(n)	2	0·64	(n)	1	0·75	(n)	77	45·47	(n)
5	2·84	(n)	2	1·10	(n)	Nil	Nil	(n)	72	69·08	(n)
6	5·45	(n)	1	1·15	(n)	1	1·50	(n)	72	41·57	(n)
19	12·61	11·73	5	2·59	1·83	2	2·60	0·62	235	126·18	171·45
6·33	4·20	3·91	1·67	0·86	0·61	0·67	0·87	0·21	78·33	42·06	57·15
8	5·24	4·27	2	1·20	0·52	Nil	0·02	0·19	84	53·65	58·76
7	8·59	3·81	2	1·46	0·68	1	0·38	0·15	90	70·03	58·48
5	6·55	4·39	3	0·95	0·75	Nil	Nil	0·24	77	55·29	63·71
20	20·38	12·47	7	3·61	1·95	1	0·40	0·58	251	179·87	180·95
6·67	6·79	4·16	2·33	1·20	0·65	0·33	0·13	0·19	83·67	59·96	60·32
7	4·43	3·73	Nil	0·04	0·49	3	2·03	0·06	64	34·54	56·10
9	6·16	4·21	1	0·10	0·52	1	0·77	0·08	80	47·20	61·72
7	8·15	4·37	Nil	Nil	0·58	Nil	Nil	0·09	71	49·47	60·93
6	6·65	3·87	Nil	Nil	0·70	2	0·70	0·10	62	45·66	59·66
6	3·75	4·01	Nil	Nil	0·44	Nil	Nil	0·02	74	49·56	56·48
5	2·21	4·43	1	0·10	0·44	Nil	Nil	0·09	70	36·85	60·12
5	2·97	5·04	Nil	Nil	0·36	Nil	Nil	0·08	60	43·96	51·37
6	8·57	(n)	Nil	Nil	(n)	Nil	Nil	(n)	70	40·88	(n)
8	10·47	(n)	Nil	Nil	(n)	3	0·66	(n)	83	58·86	(n)
6	5·47	(n)	1	0·15	(n)	1	0·20	(n)	58	47·10	(n)
45	34·32	29·66	2	0·24	3·53	6	3·50	0·52	481	307·24	406·38
6·43	4·90	4·24	0·28	0·03	0·50	0·86	0·50	0·07	68·71	43·89	58·07

(n) Not ascertained.

Monthly and Annual Rainfall Table in the

Division.	District.	Station.	January.			February.			March.		
			Number of rainy days.	Rain-fall.	Normal rain-fall.	Number of rainy days.	Rain-fall.	Normal rain-fall.	Number of rainy days.	Rain-fall.	Normal rain-fall.
Rajshahi ..	Dinajpur ..	Nithpur ..	1	0·68	0·62	2	1·73	0·91	Nil	Nil	0·60
		Nawabganj ..	1	0·21	0·15	3	1·46	0·41	Nil	Nil	0·62
		Gangarampur ..	2	0·39	0·25	3	1·50	0·78	Nil	0·04	0·70
		Itahar ..	4	2·34	0·35	2	0·94	0·63	Nil	Nil	0·61
		Raiganj ..	3	0·95	0·35	3	1·03	0·57	Nil	Nil	0·77
		Dinajpur (Obsy.) ..	1	0·36	0·32	2	0·67	0·57	Nil	Nil	0·75
		Balurghat ..	1	0·36	0·36	3	1·37	0·70	Nil	0·04	0·78
		Thakurgaon ..	3	0·74	0·30	3	1·23	0·74	Nil	Nil	0·92
		Setabganj (e) ..	..	..	0·14	..	..	0·64	..	..	0·96
		Ramganj ..	Nil	Nil	0·18	2	1·35	0·75	Nil	Nil	0·77
		Atwari ..	Nil	Nil	0·14	2	2·67	0·64	Nil	Nil	1·42
		Birganj ..	2	0·32	0·17	2	1·00	0·78	Nil	Nil	0·92
		Parbatipur ..	1	0·41	0·10	4	1·93	0·77	Nil	Nil	0·90
		Patnitola ..	1	0·75	(n)	2	1·04	(n)	Nil	Nil	(n)
		Sapahar* ..	1	0·81	(n)	4	1·23	(n)	Nil	Nil	(n)
		Total ..	19	6·76	3·43	31	16·88	8·84	Nil	0·08	10·72
		District average ..	1·58	0·56	0·26	2·58	1·41	0·68	Nil	0·01	0·82
	Jalpaiguri ..	Jalpaiguri (Obsy.) ..	1	0·10	0·30	6	3·97	0·66	Nil	Nil	0·36
		Alipur Duars ..	1	0·37	0·31	5	3·27	0·75	Nil	Nil	1·89
		Falakata ..	1	0·22	0·28	5	3·38	0·63	Nil	Nil	1·31
		Debiganj ..	2	1·08	0·35	2	1·25	0·79	Nil	Nil	1·05
		Buxa ..	1	0·22	1·00	6	4·32	1·15	Nil	Nil	2·99
		Kalchini ..	2	0·22	0·34	5	2·40	1·09	Nil	0·02	2·00
		Kumargram ..	1	0·26	0·40	2	2·02	1·10	Nil	Nil	2·48
		Total ..	9	2·47	2·98	31	20·61	6·17	Nil	0·02	13·08
		District average ..	1·28	0·35	0·43	4·43	2·94	0·88	Nil	0·00	1·87
	Darjeeling ..	Siliguri ..	Nil	0·10	0·38	4	2·13	0·70	Nil	Nil	1·24
		Darjeeling (Obsy.) ..	Nil	Nil	0·55	6	2·76	1·10	1	0·12	1·84
		Kalimpong (Obsy.) ..	Nil	0·08	0·57	5	1·84	0·84	Nil	0·06*	1·48
		Mongpoo ..	Nil	0·15	0·54	7	4·40	1·09	1	0·19	1·85
		Kurseong ..	1	0·32	0·67	5	2·26	1·12	Nil	Nil	1·84
		Pedong ..	Nil	0·09	0·65	7	2·91	1·15	Nil	0·04	2·00
		Total ..	1	0·74	3·36	34	16·30	6·00	2	0·41	10·25
		District average ..	0·17	0·12	0·56	5·67	2·72	1·00	0·33	0·07	1·71
	Rangpur ..	Bhawaniganj (Gaibandha).	2	0·47	0·32	4	1·71	0·70	1	0·12	1·21
		Rangpur (Obsy.) ..	2	0·30	0·34	3	2·83	0·69	Nil	Nil	1·13
		Pirganj ..	1	0·30	0·14	4	1·33	0·85	Nil	Nil	0·69
		Kurigaon ..	1	0·25	0·36	4	1·84	0·58	Nil	Nil	1·63
		Gobindganj ..	2	2·55	0·20	3	1·98	0·66	Nil	Nil	1·10
		Bagdogra (Nilphamari.)	3	0·67	0·35	4	1·76	0·66	Nil	Nil	1·11
		Ulipur ..	3	1·04	0·24	2	1·17	0·56	Nil	Nil	1·20
		Sunderganj ..	1	0·26	0·21	3	1·21	0·61	Nil	Nil	1·38
		Saidpur ..	1	0·20	0·07	2	0·88	0·59	Nil	Nil	1·02
		Total ..	16	6·04	2·23	29	14·71	5·80	1	0·12	10·47
		District average ..	1·78	0·67	0·25	3·22	1·64	0·64	0·11	0·01	1·16
	Bogra ..	Sherpur ..	2	0·86	0·40	2	1·02	0·75	Nil	Nil	1·09
		Nowkhilla ..	2	0·86	0·38	3	1·68	0·82	Nil	Nil	1·18
		Bogra (Obsy.) ..	2	0·54	0·38	4	1·83	0·78	Nil	Nil	1·24
		Panchbibi ..	Nil	Nil	0·32	2	0·79	0·89	Nil	Nil	0·97
		Khetlal ..	1	0·35	0·15	2	1·55	0·35	Nil	Nil	0·53
		Adamdighi ..	2	0·90	(n)	3	1·07	(n)	Nil	Nil	(n)
		Dubchanchia ..	2	0·91	(n)	3	1·85	(n)	Nil	Nil	(n)
		Total ..	7	2·61	1·63	13	6·87	3·59	Nil	Nil	5·01
		District average ..	1·40	0·52	0·33	2·60	1·37	0·72	Nil	Nil	1·00
	Pabna ..	Shazadpur ..	2	0·35	0·08	3	2·18	0·74	Nil	Nil	1·73
		Pabna ..	1	0·65	0·32	2	1·14	1·01	1	0·11	1·36
		Sirajganj (Obsy.) ..	2	1·08	0·32	3	1·70	0·77	Nil	Nil	1·33
		Iswardi ..	2	0·48	0·05	2	3·15	0·65	Nil	Nil	0·96
		Total	7	2·56	0·77	10	8·17	3·17	1	0·11	5·38
		District average ..	1·75	0·64	0·19	2·50	2·05	0·79	0·25	0·03	1·35
	Malda ..	Malda (Obsy.) ..	3	0·74	0·55	3	2·61	0·84	Nil	Nil	0·71
		Chanchal ..	2	0·62	0·43	3	1·74	0·78	Nil	Nil	0·62
		Gazol ..	2	0·41	0·35	2	0·34	0·72	Nil	Nil	0·66
		Sibganj ..	2	1·80	0·58	Nil	Nil	0·75	Nil	Nil	0·64
		Gomastapur ..	2	1·52	0·23	3	2·83	0·93	Nil	Nil	0·76
		Nawabganj ..	3	2·08	0·35	2	0·87	0·70	Nil	Nil	1·01
		Total ..	14	7·17	2·49	13	8·39	4·72	Nil	Nil	4·40
		District average ..	2·33	1·19	0·41	2·17	1·30	0·79	Nil	Nil	0·73

* Report not received since October 1934.

(e) Under repair.

(n) Not ascertained.

Province of Bengal for the year 1934

April.			May.			June.			July.		
Number of rainy days.	Rainfall.	Normal rainfall.	Number of rainy days.	Rainfall.	Normal rainfall.	Number of rainy days.	Rainfall.	Normal rainfall.	Number of rainy days.	Rainfall.	Normal rainfall.
3	2·63	0·96	3	1·47	4·88	16	12·74	11·27	11	8·17	12·25
3	2·10	1·96	10	5·43	7·13	16	17·31	15·13	16	16·27	15·56
3	3·79	1·65	6	4·12	6·03	14	12·17	12·91	17	10·86	15·60
2	2·24	1·37	3	1·49	4·59	13	6·62	11·56	16	6·76	13·87
2	1·87	1·41	2	1·50	5·59	6	11·25	12·77	11	13·24	14·75
3	2·27	2·14	6	4·12	7·59	15	10·98	14·05	14	13·39	15·50
2	1·82	1·64	7	6·98	6·73	20	14·40	11·98	17	15·81	13·18
5	4·11	2·11	11	6·37	7·60	18	13·39	17·00	19	25·33	19·95
..	..	1·84	..	..	6·60	13	6·69	15·12	16	18·96	15·55
2	1·54	2·07	4	5·47	6·19	8	10·85	16·00	11	15·20	15·81
5	2·57	3·23	8	3·66	7·87	12	22·10	20·85	14	38·42	25·31
5	3·53	2·16	10	7·67	8·13	17	12·38	16·60	19	20·26	17·03
5	5·87	2·69	9	4·68	8·28	13	9·09	14·71	18	19·11	16·33
3	1·48	(n)	7	3·98	(n)	11	9·61	(n)	11	6·94	(n)
2	1·31	(n)	4	2·47	(n)	14	8·58	(n)	12	8·10	(n)
40	34·34	25·28	79	52·06	87·21	168	154·18	189·95	183	204·43	210·69
3·34	2·86	1·94	6·58	4·41	6·71	14·00	12·85	14·61	15·25	17·04	16·21
6	3·64	3·73	13	12·91	11·07	23	30·43	23·73	21	36·82	31·28
9	6·68	5·87	19	14·56	14·61	20	22·60	30·66	19	32·25	32·97
6	3·60	4·26	12	7·55	11·88	17	16·30	23·86	16	28·84	28·43
6	3·81	3·17	10	11·76	9·50	19	18·77	19·95	18	30·81	19·93
8	6·90	8·30	20	19·25	19·60	23	55·57	39·00	23	49·23	50·36
8	4·12	6·08	18	14·97	15·20	23	37·50	28·73	21	38·54	35·36
6	7·34	7·41	17	20·87	16·74	17	38·42	32·91	17	42·90	43·20
49	36·09	38·82	109	101·87	98·60	142	219·59	198·84	135	259·39	241·58
7·00	5·16	5·55	15·56	14·55	14·09	20·28	31·37	28·41	19·29	37·06	34·50
6	4·82	3·60	13	11·47	10·79	24	36·37	25·40	24	42·19	33·40
8	2·61	3·85	17	11·41	8·70	24	22·39	24·86	25	22·64	32·31
4	1·29	2·94	16	10·81	5·53	18	18·15	17 48	19	15·85	23·90
7	3·54	4·28	17	12·30	9·16	23	28·75	26·08	19	22·54	31·08
6	5·37	4·02	11	6·57	11·81	25	35·89	32·87	24	38·02	43·60
3	0·90	5·15	16	9·97	8·94	24	18·79	19·70	25	19·93	24·42
34	18·53	23·84	90	62·53	54·93	138	160·84	146·37	136	161·17	188·71
5·67	3·09	3 97	15·00	10·42	9·16	23·00	26·72	24·39	22·67	26·86	31·45
4	3·90	2·97	8	7·88	9 81	18	20·35	15·47	18	14·65	13·15
5	4·31	3·09	12	10·43	10·93	15	14·27	17·61	17	21·47	15·26
5	3·28	3·10	8	6·81	9·90	12	17·25	16·52	14	17·82	15·75
8	7·58	4·33	17	11·95	13·66	19	19·54	22·20	16	22·87	16·09
5	2·40	2·72	8	6·54	8·33	10	17·16	14·31	16	7·05	15·04
7	3·29	3·00	12	11·65	9·63	22	10·50	19·85	18	22·36	17·18
8	11·79	4·05	11	16·21	12·98	19	15·61	18·95	17	27·67	14·08
7	3·59	3·47	9	11·07	10·54	15	15·54	15·88	22	20·81	14·97
4	4·94	2·28	10	10·61	9·58	15	5·89	15·90	13	18·85	16·71
53	45·08	29·01	95	93·15	95·36	145	136·11	156·69	151	174·55	137·23
5·89	5·01	3·22	10·56	10·35	10·60	16·11	15·12	17·41	16·78	19·39	15·25
1	2·15	2·40	11	8·98	7·58	13	9·50	11·78	11	9·73	12·22
2	3·48	2·47	10	9·62	8·94	13	14·91	13·43	11	12·57	12·22
3	4·43	2·27	11	8·12	8·50	14	10·84	14·03	19	10·92	13·06
2	2·00	2·07	5	3·71	7·28	15	11·11	11·90	13	9·77	12·20
3	1·87	2·14	4	4·33	5·16	14	6·93	8·45	11	9·93	10 16
1	0·20	(n)	6	4·98	(n)	8	6·38	(n)	11	6·87	(n)
2	3·21	(n)	7	7·48	(n)	16	11·43	(n)	11	6·04	(n)
11	13·93	11·35	41	34·76	37·49	69	53·29	59·59	65	52·92	60·36
2·20	2·79	2·27	8·20	6·95	7·69	13·80	10·66	11·92	13·00	10·59	12·07
5	2·72	2·90	9	7·61	6·40	17	23·36	10·60	16	9·24	10·49
6	2·30	3·11	13	5·34	7·46	19	24·59	11·33	16	6·82	10·76
5	4·33	3·31	13	10·39	7·88	15	14·20	12·41	15	8·47	11·49
4	5·79	2·20	9	9·09	6·35	18	29·63	10·96	19	19·27	9·52
20	15·14	11·52	44	32·43	28·09	69	91·68	45·30	66	43·80	42·26
5·00	3·79	2·88	11·00	8·11	7·02	17·25	22·92	11·32	16·50	10·95	10·57
Nil	0·02	1·13	2	0·69	4·50	9	10·27	10·35	12	8·80	10·97
2	1·29	1·10	3	2·88	4·82	9	9·36	11·37	16	17·90	13·83
3	1·68	1·16	3	2·05	4·36	13	7·16	10·36	13	13·13	13·60
2	0·25	1·10	1	0·77	5·01	8	7·81	9·72	11	3·57	11·10
3	1·82	1·34	1	0·48	4·41	12	11·00	10·48	9	8·22	12·02
5	1·44	1·40	6	2·49	4·64	9	7·21	11·78	10	7·10	11·10
15	6·50	7·23	16	8·86	27·74	60	52·81	64·06	71	58·72	72·62
2·50	1·08	1·21	2·67	1·48	4·62	10·00	8·80	10·68	11·83	9·79	12·10

(n) Not ascertained.

Monthly and Annual Rainfall Table in the

Division.	District.	Station.	August.			Sepetember.		
			Number of rainy days.	Rainfall.	Normal rainfall.	Number of rainy days.	Rainfall.	Normal rainfall.
Rajshahi ..	Dianjpur ..	Nithpur ..	12	6·35	11·19	9	4·51	9·89
		Nawabganj ..	16	9·50	14·39	12	6·43	11·05
		Gangarampur ..	15	10·39	14·05	6	5·57	11·02
		Itahar ..	16	18·41	13·02	8	2·86	11·57
		Raiganj ..	9	10·40	14·18	8	4·29	10·82
		Dinajpur (Obsy.) ..	14	12·12	13·35	10	6·08	12·30
		Balurghat ..	10	17·65	12·36	10	6·81	10·51
		Thakurgaon ..	12	9·21	17·07	15	12·71	14·74
		Setabganj (e) ..	14	7·58	15·50	12	8·35	11·95
		Ramganj ..	9	5·81	15·46	8	9·80	13·56
		Atwari ..	19	18·66	21·07	5	8·25	16·63
		Birganj ..	14	10·77	13·85	13	8·94	11·99
		Parbatipur ..	21	14·39	14·53	10	5·46	11·00
		Patnitola ..	12	6·83	(n)	10	9·56	(n)
		Saparhar* ..	14	8·28	(n)	3	3·05	(n)
		Total ..	167	143·66	190·02	109	81·71	157·03
		District average ..	13·92	11·97	14·62	9·09	6·81	12·08
	Jalpaiguri ..	Jalpaiguri (Obsy.) ..	22	28·11	25·04	19	27·54	19·94
		Alipur Duars ..	16	20·17	25·39	17	28·50	22·86
		Falakata ..	14	17·15	22·72	13	20·98	18·16
		Debiganj ..	15	16·90	16·68	16	15·42	14·68
		Buxa ..	20	25·95	44·03	18	37·99	31·18
		Kalchini ..	15	16·11	31·08	20	46·60	21·05
		Kumargram ..	5	21·40	29·04	10	28·49	25·59
		Total ..	107	145·79	195·28	113	205·52	153·46
		District average ..	15·29	20·83	27·75	16·16	29·36	21·92
	Darjeeling ..	Siliguri ..	21	28·72	27·47	19	21·14	21·44
		Darjeeling (Obsy.) ..	26	24·32	26·12	18	11·59	18·38
		Kalimpong (Obsy.) ..	23	17·05	19·04	11	6·04	12·52
		Mongpoo ..	23	24·78	25·98	14	10·27	18·11
		Kurseong ..	27	39·76	34·42	18	16·72	24·47
		Pedong ..	26	17·51	22·09	16	7·65	14·77
		Total ..	146	152·14	155·07	96	73·41	109·69
		District average ..	24·33	25·36	25·84	16·00	12·24	18·29
	Rangpur ..	Bhawaniganj (Gaibandha).	18	5·56	12·05	7	4·82	12·10
		Rangpur (Obsy.) ..	16	8·45	13·63	9	6·65	13·74
		Pirganj ..	10	6·17	13·62	7	6·92	13·02
		Kurigaon ..	9	5·40	12·21	8	3·40	14·34
		Gobindganj ..	18	10·26	13·07	13	12·85	13·39
		Bagdogra (Nilphamari).	18	14·62	15·69	11	6·92	14·50
		Ulipur ..	9	4·14	13·07	7	6·04	13·89
		Sunderganj ..	9	5·48	12·27	8	11·74	13·21
		Saidpur ..	16	13·31	14·84	9	5·79	11·68
		Total ..	123	73·39	121·35	79	65·13	119·96
		District average ..	13·67	8·16	13·48	8·78	7·24	13·33
	Bogra ..	Sherpur ..	11	14·34	12·11	12	11·87	10·27
		Nowkhilla ..	12	12·52	12·25	8	6·08	10·75
		Bogra (Obsy.) ..	13	11·23	13·29	12	9·72	11·67
		Panchbibi ..	9	6·38	11·85	6	8·07	11·35
		Khetlal ..	12	4·62	8·18	11	7·57	8·04
		Adamdighi ..	12	12·25	(n)	6	8·40	(n)
		Dubchanchia ..	10	8·54	(n)	12	11·83	(n)
		Total ..	57	49·09	57·68	49	40·31	52·08
		District average ..	11·40	9·82	11·54	9·80	8·06	10·42
	Pabna ..	Shazadpur ..	11	8·05	12·27	9	2·01	7·01
		Pabna ..	16	6·17	10·63	10	5·80	9·12
		Sirajganj (Obsy.) ..	14	9·06	11·50	10	3·54	9·71
		Iswardi ..	20	14·63	10·51	9	11·67	8·54
		Total ..	61	37·91	44·91	38	23·02	35·28
		District average ..	15·25	9·48	11·23	9·50	5·76	8·82
	Malda ..	Malda (Obsy.) ..	15	7·41	11·52	15	15·06	10·79
		Chanchal ..	14	15·32	12·34	4	7·91	10·38
		Gazol ..	14	5·74	12·98	9	8·72	10·96
		Sibganj ..	10	8·83	10·18	7	10·35	9·17
		Gomastapur ..	8	5·23	10·62	11	9·25	7·60
		Nawabganj ..	14	6·35	11·83	9	6·42	8·76
		Total ..	75	48·88	69·47	55	57·71	57·66
		District average ..	12·50	8·15	11·58	9·17	9·62	9·61

*Report not received since October 1934.

(e) Under repair.

(n) Not ascertained.

Province of Bengal for the year 1934.

October.			November.			December.			Annual.		
Number of rainy days.	Rainfall.	Normal rainfall.	Number of rainy days.	Rainfall.	Normal rainfall.	Number of rainy days.	Rainfall.	Normal rainfall.	Number of rainy days.	Rainfall.	Normal rainfall.
5	2·42	4 60	Nil	Nil	0·32	1	0·75	0·00	63	41·45	57·49
6	2·97	5·01	1	0·50	0·18	Nil	Nil	0·00	84	62·18	71·59
5	6·82	4·18	Nil	Nil	0·13	Nil	0·10	0·15	71	55·25	67·40
5	6·52	3·22	1	0·56	0·26	Nil	Nil	0·09	70	50·74	61·14
3	5·51	3·40	Nil	Nil	0·19	Nil	Nil	0·11	42	50·04	64·91
2	6·86	4·25	1	1·82	0·22	1	0·15	0·06	69	58·82	71·10
6	4·05	4·45	Nil	Nil	0·32	Nil	Nil	0·08	76	69·29	63·09
5	4·32	4·09	Nil	Nil	0·19	1	1·17	0 05	92	78·58	84·76
4	3·39	3·72	Nil	Nil	0·16	1	1·25	0·06	60	46·22	72·24
1	0·38	3·74	Nil	Nil	0·25	Nil	Nil	0·01	45	50·49	74·79
3	5·70	3·48	Nil	Nil	0·00	2	0·79	0·02	70	102·82	100·66
4	4·30	4·85	1	0·71	0 30	1	0·48	0·07	88	70·38	76·85
3	3·85	5·05	Nil	Nil	0·33	1	1·35	0·03	85	67·04	74·72
5	2·59	(n)	Nil	Nil	(n)	Nil	0·02	(n)	62	42·80	(n)
..	..	(n)	..	..	(n)	..	..	(n)	54	33·83	(n)
48	53·70	54·04	4	3·59	2·85	7	4·79	0·73	855	757·08	940·74
4·00	4·47	4·16	0·33	0·30	0·22	0·58	0·40	0·06	71·25	63·09	72·37
6	3·64	4·90	Nil	0·04	0·20	2	0·60	0·11	119	147·80	122·32
5	4·86	5·15	Nil	0·03	0·26	Nil	0·05	0·14	111	133·34	140·86
Nil	Nil	4·29	Nil	Nil	0·30	1	0·41	0·11	85	98·43	116·23
4	4·52	3·82	Nil	0·05	0·17	Nil	0·14	0·05	92	104·51	90·15
9	8·20	9·97	4	1·00	0·90	2	0·67	0·61	134	209·30	209·09
5	5·38	6·19	1	0·18	0·64	1	0·22	0·15	119	166·26	148·21
4	3·05	8·15	Nil	Nil	0·56	1	0·46	0·22	80	165·21	167·80
33	29·65	42·48	5	1·30	3·03	7	2·55	1·39	740	1024·85	994·66
4·71	4·24	6·07	0·72	0·19	0·43	1·00	0·36	0·19	105·72	146·41	142·09
5	0·07	0·08	Nil	0·13	0·43	2	1·58	0·10	118	154·72	131·03
8	12·14	4·54	3	0·86	0·78	1	0·72	0·24	137	111·56	123·27
5	8·10	3·15	2	0·27	0·62	1	1·14	0 27	104	80·68	88·34
6	10·92	3·94	Nil	0·13	0·65	1	0·16	0·31	118	118·13	123·00
8	11·61	5·69	2	0·70	0·49	1	0·75	0·26	128	157·97	161·26
9	9·07	3·71	1	0·31	0·73	1	1 30	0·44	128	88·47	103·75
41	57·91	24·11	8	2·40	3·70	7	5·65	1·62	733	711·58	730·65
6·83	9·65	4·52	1·33	0·40	0·62	1·17	0·94	0·27	122·17	118·59	121·78
8	5·04	5·73	1	2·00	0·30	1	0·20	0·09	90	66·70	73·90
6	3·18	5·36	1	0·34	0·21	1	0 96	0·04	87	73 19	82·03
4	5·94	5·80	Nil	Nil	0·46	Nil	Nil	0·10	65	65·82	79·95
9	7·87	5·29	Nil	0·02	0·24	Nil	Nil	0·10	91	80·82	91·03
6	4·52	5·53	Nil	Nil	0·43	Nil	Nil	0·06	81	66·21	74·74
3	1·99	4·16	Nil	Nil	0·14	Nil	Nil	0·08	98	73·76	86·44
9	7·96	6·67	1	0·21	0·33	Nil	Nil	0·06	86	91·84	86 08
8	5·23	6·35	1	0·36	0·33	1	0·21	0·07	84	75·50	79·19
5	7·72	4·76	1	0·35	0·23	Nil	0·06	0·05	76	68·60	77·71
58	49·45	49·69	5	3·28	2·67	3	1·43	0·65	758	662·44	731·07
6·44	5·49	5·52	0·55	0·36	0·30	0·33	0·16	0·07	84·22	73·60	81·23
7	7·14	4·44	Nil	Nil	0·60	1	1·01	0·12	71	66·60	63·76
8	7·80	5·13	Nil	Nil	0·52	1	0·37	0·11	70	69·89	68·20
8	6·57	4·96	Nil	0·04	0·74	1	1·52	0·05	87	62·76	70·97
4	4·52	4·93	Nil	Nil	0·31	Nil	Nil	0·09	56	46·35	64·66
4	3·63	4·20	Nil	Nil	0·28	1	0·25	0·00	63	41·03	47·04
6	4·15	(n)	Nil	Nil	(n)	1	0·95	(n)	56	46·15	(n)
6	6·05	(n)	Nil	Nil	(n)	1	0·36	(n)	70	57·65	(n)
31	29·66	23·66	Nil	0·04	2·45	4	3·15	0·37	347	286·63	315·23
6·20	5·93	4·73	Nil	0·01	0·49	0·80	0·63	0·07	69·40	57·33	63·06
7	6·56	5·17	1	0·32	0·24	3	1·29	0·13	83	63·69	58·66
7	3·93	4·42	3	1·43	0·57	2	0·51	0·11	96	58·79	60·20
11	8·91	4·91	Nil	0·13	0·62	1	0·24	0·11	89	62·05	64·39
6	8·15	4·94	Nil	0·08	0·55	3	1·05	0·18	92	102·99	55·41
31	27·55	19·47	4	1·96	1·98	9	3·09	0·53	360	287·52	238·66
7·75	6·89	4·87	1·00	0·49	0·49	2·25	0·77	0·13	90·00	71·88	59·67
6	3·05	4·34	Nil	0·01	0·35	1	0·34	0·05	66	49·00	56·10
3	7·22	2·80	Nil	Nil	0·26	Nil	0·05	0 05	56	63·79	58·78
8	2·32	3·53	Nil	Nil	0·32	Nil	Nil	0·05	62	41·55	59·05
3	3·05	3·57	Nil	Nil	0·50	1	1·13	0·08	45	37·56	52·40
5	3·34	4·79	Nil	Nil	0·54	Nil	Nil	0·10	54	43·69	53·82
3	1·79	4·01	Nil	Nil	0·56	1	0·22	0·10	62	35·97	56·24
23	20·77	23·04	Nil	0·01	2·68	3	1·74	0·43	345	271·56	336·39
3·83	3·46	3·84	Nil	0·00	0·42	0·50	0·29	0·07	57·50	45·26	56·06

(n) Not ascertained.

Monthly and Annual Rainfall Table in the

Division.	District.	Station.	January.			February.			March.		
			Number of rainy days.	Rainfall.	Normal rainfall.	Number of rainy days.	Rainfall.	Normal rainfall.	Number of rainy days.	Rainfall.	Normal rainfall.
Dacca ..	Dacca ..	Munshiganj ..	1	0·32	0·46	3	2·18	1·30	Nil	Nil	2·98
		Dacca ..	1	0·54	0·34	3	3·13	1·25	Nil	Nil	2·63
		Nawabganj ..	1	0·71	0·17	3	2·20	1·07	Nil	Nil	3·29
		Narayanganj (Obsy.)	1	0·40	0·30	3	2·89	1·40	Nil	Nil	2·69
		Narsingdi ..	1	0·29	0·18	3	2·22	0·95	Nil	Nil	3·55
		Manickganj ..	1	0·48	0·39	4	3·63	1·18	Nil	Nil	1·85
		Joydebpur ..	1	0·44	0·36	3	1·78	1·02	Nil	Nil	2·31
		Kapasia ..	2	0·70	0·30	3	1·83	0·54	Nil	Nil	1·79
		Total ..	9	3·88	2·50	25	19·86	8·71	Nil	Nil	21·09
		District average ..	1·12	0·48	0·31	3·12	2·48	1·09	Nil	Nil	2·64
	Mymensingh ..	Kishoreganj ..	1	0·23	0·53	4	2·97	0·92	1	0·15	2·56
		Atia (Tangail) ..	2	0·49	0·39	2	2·59	0·93	1	0·11	1·39
		Sarisabari ..	2	0·55	0·17	4	1·93	0·72	1	0·65	1·17
		Mymensingh (Obsy.)	3	0·47	0·33	5	1·75	0·94	1	0·12	2·09
		Jamalpur ..	2	0·53	0·37	3	1·66	0·88	Nil	Nil	1·39
		Netrokona ..	1	0·55	0·29	5	2·37	0·97	1	0·42	2·40
		Pingna	3	0·86	0·09	3	2·13	0·84	Nil	Nil	1·21
		Durgapur (*f*) ..	..	..	0·35	..	..	0·80	..	..	2·11
		Sherpur (Town) ..	2	0·58	0·35	5	2·25	0·73	1	0·46	1·63
		Dewanganj (*g*) ..	1	1·04	0·28	3	0·62	0·56	Nil	Nil	1·88
		Nalitabari ..	1	0·40	0·26	5	1·93	0·59	1	0·20	1·59
		Total ..	17	4·66	3·41	36	19·58	8·88	7	2·11	18·92
		District average ..	1·89	0·52	0·31	4·00	2·18	0·81	0·78	0·23	1·72
	Faridpur ..	Madaripur ..	1	0·23	0·46	2	3·13	1·08	Nil	Nil	2·36
		Faridpur (Obsy.) ..	1	0·36	0·45	3	2·66	1·32	Nil	Nil	2·33
		Rajbari (Goalundo) ..	1	0·33	0·39	3	3·66	1·21	Nil	Nil	2·06
		Haridaspur ..	1	0·23	0·27	4	1·03	1·02	Nil	Nil	1·91
		Taltorhat ..	1	0·54	0·21	4	2·11	0·88	Nil	Nil	1·69
		Bhanga	1	0·10	0·15	2	1·23	0·80	Nil	Nil	2·14
		Pangsa	1	0·28	0·20	2	2·94	0·91	Nil	Nil	2·20
		Baliakandi ..	1	0·84	0·24	3	2·08	1·33	Nil	0·06	2·96
		Bhusna	1	0·44	0·26	4	1·62	1·24	Nil	Nil	2·02
		Palong	1	0·30	0·30	1	0·79	1·40	Nil	Nil	3·22
		Total ..	10	3·74	2·93	28	21·25	11·19	Nil	0·06	22·89
		District average ..	1·00	0·37	0·29	2·80	2·13	1·12	Nil	0·01	2·29
	Bakarganj ..	Patuakhali ..	1	0·23	0·54	2	1·95	1·40	1	0·52	2·09
		Barguna	Nil	Nil	0·20	1	0·89	1·34	1	0·44	2·05
		Pirojpur ..	Nil	0·05	0·53	2	0·34	1·28	Nil	Nil	1·67
		Barisal (Obsy.) ..	1	0·21	0·41	2	1·73	1·05	1	0·14	2·22
		Gaurnadi	1	0·26	0·22	1	1·43	1·04	Nil	0·08	2·44
		Bhola	1	0·27	0·33	2	0·84	0·92	Nil	Nil	2·11
		Daulatkhan ..	1	0·40	0·24	3	0·83	0·94	Nil	Nil	2·07
		Bauphal ..	Nil	Nil	0·41	2	1·47	1·00	Nil	Nil	1·68
		Total ..	5	1·42	2·97	15	9·48	8·97	3	1·18	16·33
		District average ..	0·62	0·18	0·37	1·87	1·18	1·12	0·37	0·15	2·04
Chittagong ..	Chittagong ..	Cox's Bazar (Obsy.) ..	Nil	Nil	0·15	1	0·42	0·49	1	0·19	1·28
		Chittagong (Obsy.) ..	1	0·12	0·28	2	0·49	1·03	2	1·00	2·56
		Kutubdia ..	Nil	Nil	0·34	Nil	Nil	0·65	Nil	0·03	2·05
		Satkania ..	Nil	Nil	0·22	2	0·86	0·40	1	0·10	1·80
		Mirsarai ..	Nil	Nil	0·10	2	0·65	0·82	1	1·15	2·47
		Rangunia ..	Nil	Nil	(*n*)	2	1·33	(*n*)	2	0·49	(*n*)
		Total ..	1	0·12	1·09	7	2·42	3·39	5	2·47	10·16
		District average ..	0·20	0·05	0·22	1·40	0·48	0·68	1·00	0·49	2·03
	Tippera ..	Comilla (Obsy.) ..	2	0·37	0·29	5	2·31	1·18	1	1·34	2·95
		Chandpur ..	2	0·44	0·41	2	2·88	1·09	Nil	Nil	2·88
		Brahmanbaria ..	Nil	Nil	0·49	5	2·87	1·19	Nil	0·08	3·82
		Ramchandrapur ..	1	0·90	0·23	4	2·25	1·01	1	0·50	2·66
		Nasirnagar ..	Nil	Nil	0·34	7	8·11	1·02	Nil	Nil	3·14
		Daudkandi ..	1	0·15	0·36	Nil	Nil	1·05	Nil	Nil	2·29
		Kasba	1	0·22	0·24	8	6·45	0·97	Nil	Nil	3·18
		Laksam	Nil	Nil	0·44	2	1·98	1·21	2	1·25	2·23
		Total ..	7	2·08	2·80	33	26·85	8·72	4	3·17	23·15
		District average ..	0·88	0·26	0·35	4·13	3·36	1·09	0·50	0·40	2·89

(*f*) Durgapur was under repair.
(*g*) Dewanganj was under repair in April to July 1934.

Province of Bengal for the year 1934.

April.			May.			June.			July.		
Number of rainy days.	Rainfall.	Normal rainfall.	Number of rainy days.	Rainfall.	Normal rainfall.	Number of rainy days.	Rainfall.	Normal rainfall.	Number of rainy days.	Rainfall.	Normal rainfall.
5	5·74	5·57	8	6·28	9·78	15	23·80	14·50	17	14·60	14·11
4	2·84	5·36	12	9·35	9·75	13	30·26	13·36	19	12·81	12·84
6	3·00	6·84	12	9·30	8·27	17	26·06	15·52	15	9·06	13·87
5	3·60	5·48	12	9·25	9·41	16	22·03	12·95	17	14·39	12·98
6	6·34	7·12	8	8·04	9·87	16	17·29	14·92	17	14·30	12·26
8	2·47	4·33	10	7·51	9·15	14	25·47	11·54	13	5·84	11·76
10	6·47	5·69	7	6·73	9·76	13	33·20	14·04	16	17·47	13·45
8	3·43	6·44	11	4·01	8·16	11	22·98	15·13	15	13·49	14·93
52	33·89	46·83	80	61·37	74·15	115	201·69	112·16	129	101·96	106·20
6·50	4·24	5·85	10·00	7·67	9·27	14·37	25·21	14·02	16·13	12·75	13·27
6	6·05	6·37	14	6·68	12·02	19	23·64	19·29	18	27·43	15·46
6	3·85	3·53	12	6·90	8·32	13	22·57	12·00	15	9·45	11·08
3	2·67	3·51	14	9·73	8·48	17	19·97	13·09	14	7·12	13·45
8	8·09	5·75	14	10·25	12·54	17	21·81	18·71	23	14·34	16·46
6	3·13	3·47	15	9·71	9·66	16	20·24	15·36	15	8·76	13·79
10	11·49	6·11	14	13·28	13·91	19	32·83	23·66	23	28·36	20·36
4	3·44	2·84	12	10·30	7·93	15	11·47	13·75	16	7·21	10·53
..	..	5·57	..	..	15·84	..	..	26·99	..	..	30·80
7	4·72	4·44	14	9·94	10·60	18	23·39	15·35	18	15·68	16·84
..	..	3·29	..	..	11·38	..	..	16·23	..	..	14·75
9	9·96	5·16	11	6·47	11·94	19	29·13	21·71	24	20·30	20·23
59	53·40	50·04	120	83·26	122·62	158	205·05	196·14	166	138·65	183·75
6·56	5·93	4·55	13·33	9·25	17·15	17·00	22·78	17·83	18·44	15·41	16·70
3	1·19	4·47	9	8·52	8·71	20	27·02	12·12	12	21·37	12·60
5	2·62	4·72	10	7·78	9·04	18	20·46	13·36	14	9·43	12·83
6	3·45	4·15	11	6·78	8·29	16	23·45	12·20	8	7 27	11·15
5	3·66	4·98	12	6·23	8·56	15	12·18	13·25	18	12·64	13·33
3	0·76	5·91	10	7·88	9·18	18	18·77	17·41	16	11·34	13·31
1	0·54	5·76	11	9·49	8·51	18	26·51	15·98	13	5·15	11·75
5	3·50	3·33	13	5·27	8·30	19	16·45	15·17	14	6·20	12·43
6	3·91	4·13	11	3·88	9·03	16	15·29	15·01	14	10·46	12·66
5	3·05	5·47	12	6·31	9·08	15	13·22	12·89	18	7·23	11·07
1	0·26	8·05	6	4·95	10·77	19	16·22	18·74	12	18·32	17·40
40	22·94	50·97	105	67·09	89·47	174	186·57	145·23	139	109·41	128·53
4·00	2·29	5·10	10·50	6·71	8·95	17·40	18·66	14·52	13·90	10·94	12·85
2	2·14	4·19	5	5·44	10·12	20	23·12	21·94	24	18·21	22·07
1	0·79	4·47	2	6·16	10·02	18	20·55	21·70	14	18·33	22·58
2	2·23	3·25	3	3·45	9·95	14	20·53	15·29	19	20·70	15·92
2	0·25	4·78	9	8·06	9·02	18	25·29	16·33	21	13·58	15·60
1	0·19	4·53	6	5·13	8·33	17	12·80	13·77	16	12·15	13·98
2	1·16	4·70	8	6·42	8·17	21	17·14	18·08	21	13·52	17·79
1	0·50	5·75	9	6·84	10·68	20	24·00	21·22	28	19·71	19·31
Nil	Nil	4·55	4	3·91	9·70	21	20·88	18·08	26	21·11	20·04
11	7·26	36·22	46	45·41	73·09	149	173·31	147·01	169	137·31	147·24
1·37	0·91	4·53	5·75	5·68	9·25	18·63	21·66	18·38	21·13	17·16	18·41
Nil	0·12	4·93	7	6·34	12·60	19	39·19	30·14	25	32·88	35·94
7	2·78	5·47	12	8·76	9·52	19	25·28	20·79	23	41·81	22·40
1	0·77	4·06	5	5·25	10·76	18	29·74	24·24	17	48·52	28·85
1	0·20	4·73	7	3·45	8·89	19	19·83	20·41	20	25·71	25·36
5	3·95	5·85	11	14·83	9·99	12	31·90	23·38	18	31·10	26·41
5	4·51	(n)	11	12·28	(n)	20	24·56	(n)	22	30·50	(n)
14	7·82	25·04	42	38·63	51·76	87	145·94	118·96	103	180·02	138·96
2·80	1·56	5·01	8·40	7·72	10·35	17·40	29·19	23·79	20·60	36·00	27·79
4	3·65	6·58	13	13·52	11·77	16	26·21	18·05	20	14·34	15·05
4	2·22	5·50	8	9·18	8·96	16	18·70	15·57	19	17·14	14·40
6	4·04	6·51	14	13·50	12·01	16	18·18	15·75	18	17·89	11·16
4	2·75	7·26	10	8·35	10·68	16	27·90	16·73	17	14·45	13·35
6	9·21	8·87	14	13·07	12·66	14	14·42	15·59	11	16·12	12·19
4	1·50	4·76	6	7·44	8·82	19	18·51	14·39	27	22·21	13·33
5	6·15	7·02	9	12·88	10·56	15	17·49	15·30	16	8·19	11·69
3	3·24	5·77	11	9·90	10·63	15	25·74	16·57	16	21·23	18·41
36	32·76	52·27	85	87·84	86·09	127	162·15	127·05	144	131·57	100·58
4·50	4·10	6·53	10·63	10·98	10·76	15·87	20·27	15·99	18·00	16·45	13·70

(n) Not ascertained.

Monthly and Annual Rainfall Table in the

Division.	District.	Station.	August.			September.		
			Number of rainy days.	Rainfall.	Normal rainfall.	Number of rainy days.	Rainfall.	Normal rainfall.
Dacca ..	Dacca ..	Munshiganj ..	19	10·97	18·68	16	5·67	10·97
		Dacca ..	20	13·19	13·14	13	4·65	9·76
		Nawabganj ..	11	6·16	11·47	11	3·40	7·99
		Narayanganj (Obsy.)	18	10·47	12·74	17	5·40	9·63
		Narsingdi ..	16	9·10	12·30	11	13·21	8·88
		Manickganj ..	14	7·78	11·83	8	4·85	8·51
		Joydebpur ..	16	9·80	14·03	14	8·76	10·18
		Kapasia ..	16	10·51	13·04	11	9·11	7·36
		Total ..	130	77·98	102·23	101	55·05	73·28
		District average ..	16·25	9·75	12·78	12·63	6·88	9·16
	Mymensingh ..	Kishoreganj ..	13	7·07	15·58	7	4·50	13·00
		Atia (Tangail) ..	13	6·82	11·41	6	3·00	8·67
		Sarisabari ..	16	6·99	14·22	15	4·66	7·22
		Mymensingh (Obsy.)	16	8·16	15·64	11	5·53	13·74
		Jamalpur ..	16	6·91	13·99	13	11·17	12·42
		Netrokona ..	25	15·91	21·15	18	11·81	15·41
		Pingna	18	7·55	15·32	8	5·16	8·92
		Durgapur (*f*) ..	..	..	31·30	..	..	19·95
		Sherpur (Town) ..	16	7·40	15·89	11	7·69	12·46
		Dewanganj (*g*) ..	1	0·50	14·32	9	10·17	11·54
		Nalitabari ..	16	8·48	19·21	15	15·21	14·10
		Total ..	149	75·29	188·03	104	68·73	137·43
		District average ..	16·56	8·36	17·09	11·56	7·64	12·49
	Faridpur ..	Madaripur ..	14	15·21	11·99	13	8·24	8·71
		Faridpur (Obsy.) ..	17	12·45	12·42	11	3·82	9·29
		Rajbari (Goalundo) ..	12	4·72	10·96	6	2·88	8·29
		Haridaspur ..	14	4·68	12·70	5	3·68	8·15
		Takerhat ..	14	8·87	13·89	6	3·80	9·18
		Bhanga ..	14	5·65	12·19	12	5·30	9·52
		Pangsa ..	15	5·39	12·29	12	6·36	6·68
		Ballakandi ..	13	6·26	13·33	9	4·95	7·89
		Bhusna ..	15	7·59	12·85	10	3·26	9·60
		Palong	4	5·11	17·22	6	3·11	8·64
		Total ..	132	75·93	129·84	90	45·40	85·95
		District average ..	13·20	7·59	12·98	9·00	4·54	8·60
	Bakarganj ..	Patuakhali ..	23	25·99	18·05	19	16·92	13·90
		Barguna ..	19	13·47	19·61	11	15·25	12·64
		Pirojpur ..	20	19·20	13·40	12	13·32	10·49
		Barisal (Obsy.) ..	20	16·73	13·62	14	6·92	11·15
		Gaurnadi ..	19	13·62	12·74	11	4·20	9·21
		Bhola ..	19	15·60	16·98	13	7·48	12·07
		Daulatkhan ..	21	23·29	19·26	15	20·00	12·90
		Bauphal ..	17	10·39	18·61	16	7·91	13·42
		Total ..	158	138·29	133·12	111	92·00	95·78
		District average ..	19·75	17·29	16·64	13·88	11·50	11·97
Chittagong ..	Chittagong ..	Cox's Bazar (Obsy.) ..	19	17·01	28·55	15	14·18	13·54
		Chittagong ..	18	10·75	19·30	10	3·33	11·93
		Kutubdia ..	15	18·87	25·07	12	10·03	12·89
		Satkania ..	16	6·48	20·00	6	2·65	11·59
		Mirsarai ..	18	20·00	25·51	14	13·82	15·79
		Rangunia ..	22	13·40	(*n*)	10	4·19	(*n*)
		Total ..	86	79·11	118·43	57	44·01	65·74
		District average ..	17·20	15·82	23·69	11·40	8·80	13·15
	Tippera ..	Comilla (Obsy.) ..	22	14·49	15·73	15	8·40	10·93
		Chandpur ..	20	10·97	16·22	16	8·91	10·65
		Brahmanbaria ..	19	12·71	12·14	12	4·10	10·23
		Ramchandrapur ..	16	12·65	13·52	10	5·50	10·05
		Nasirnagar ..	6	7·65	11·94	2	1·75	11·27
		Daudkandi ..	23	19·81	12·54	15	13·23	8·79
		Kasba ..	9	5·20	12·14	5	1·89	9·13
		Laksam ..	13	10·68	17·17	10	6·87	11·61
		Total ..	128	103·16	111·40	85	50·65	82·66
		District average ..	16·00	12·88	13 94	10·62	6 33	10·33

(*f*) Durgapur was under repair.
(*g*) Dewanganj was under repair in April to July 1934.

Province of Bengal for the year 1934.

October.			November.			December.			Annual.		
Number of rainy days.	Rainfall.	Normal rainfall.	Number of rainy days.	Rainfall.	Normal rainfall.	Number of rainy days.	Rainfall.	Normal rainfall.	Number of rainy days.	Rainfall.	Normal rainfall.
10	8·38	5·56	5	2·75	1·03	2	1·28	0·21	101	81·97	80·15
10	6·85	4·60	3	1·58	0·84	1	0·49	0·17	99	85·69	74·24
9	6·69	4·81	5	2·67	0·39	3	2·37	0·21	93	71·62	73·90
9	9·22	5·07	4	1·60	0·98	1	0·55	0·19	103	80·40	73·82
8	7·01	5·50	3	1·42	0·83	1	0·33	0·27	90	80·45	76·63
8	9·35	4·16	3	1·03	0·89	3	0·71	0·15	86	69·12	65·74
9	6·31	4·74	4	1·09	0·98	2	0·83	0·13	95	92·88	76·69
9	7·29	4·65	4	2·74	0·31	2	0·66	0·14	92	76·75	72·79
72	61·10	39·09	31	14·88	6·25	15	7·22	1·47	759	638·88	593·06
9·00	7·64	4·99	3·88	1·86	0·78	1·88	0·90	0·18	94·88	79·86	74·25
11	16·96	5·88	4	1·17	0·79	2	0·81	0·19	100	97·66	92·59
8	2·36	4·35	1	1·39	0·51	1	0·75	0·10	80	60·28	62·68
7	4·86	5·33	Nil	Nil	0·48	Nil	Nil	0·26	93	59·13	68·10
10	20·37	5·80	2	0·80	0·88	1	1·09	0·07	111	92·78	92·95
8	6·92	5·22	Nil	Nil	0·46	1	0·46	0·13	95	69·49	77·14
11	28·41	7·05	2	0·24	0·76	Nil	0·02	0·12	129	145·69	112·19
10	7·90	5·22	Nil	Nil	0·18	1	0·25	0·05	90	56·27	86·88
..	..	7·33	..	..	0·80	..	..	0·04	..	..	141·88
10	14·60	5·35	1	0·15	0·78	2	0·45	0·04	105	87·31	84·46
7	5·93	5·52	Nil	Nil	0·63	1	0·40	0·03	22	18·66	79·91
8	17·45	5·44	Nil	0·09	0·72	1	0·18	0·04	110	109 80	100·99
83	119·83	62·49	10	3·84	6·99	9	4·01	1·07	913	778·41	979·77
9·22	13·31	5·68	1·11	0·43	0·64	1·00	0·45	0·10	101·45	86·40	89·07
10	15·69	4·69	4	5·59	0·81	1	3·13	0·17	89	109·32	69·17
8	9·09	4·74	2	2·16	1·10	2	0·56	0·12	91	71·39	71·72
8	5·89	4·43	Nil	0·27	0·87	1	0·50	0·12	72	59·20	64·22
8	6·15	5·59	3	0·79	0·87	1	1·40	0·22	86	52·67	70·85
9	7·10	5·02	4	2·82	0·67	2	1·96	0·28	87	62·95	77·63
10	6 73	5·83	3	2·05	0·58	3	2·13	0·17	88	64·97	71·38
7	4·68	5·18	2	0·56	0·54	3	0·80	0·22	93	52·43	67·45
8	12·77	6·06	3	0·85	0·36	1	0·57	0·43	85	61·92	78·42
10	6·96	6·08	6	2·59	0·79	2	0·73	0·22	98	53·00	72·17
6	5·54	7·56	Nil	Nil	0·74	Nil	Nil	0·28	56	54·60	94·32
84	80·60	55·78	27	17·68	7·33	16	11·78	2·23	845	642 ·45	732·34
8·40	8·06	5·58	2·70	1·77	0·73	1·60	1·18	0·22	84·50	64·25	73·23
5	17·67	8·01	6	3·26	1·61	Nil	Nil	0·42	108	115·45	105·24
5	12·86	8·72	4	5·80	1·06	Nil	Nil	0·20	76	103·54	104·68
9	16·10	5·55	5	6·92	1·19	1	0 20	0·22	87	102·13	76·78
9	10·87	6·26	5	1·95	1·48	2	0·80	0·39	104	86·58	82·31
8	9·01	4·90	5	3·12	1·08	Nil	Nil	0·16	85	61·99	72·35
10	10·82	6·60	6	3·29	1·37	2	0·94	0·33	105	77·48	90·00
7	10·53	7·15	7	1·26	1·50	1	0·90	0·25	113	108·26	101·27
6	8·71	7·15	3	2·96	1·40	2	0·78	0·39	97	78·12	96·43
59	96·57	54·34	41	27·56	10·69	8	3·71	2·36	775	733·50	729·02
7·38	12·07	6·79	5·13	3·45	1·34	1·00	0·46	0·29	96·88	91·69	91·13
8	27·90	8·73	5	4·26	3·78	Nil	0·01	0·51	100	142·53	140·64
7	11·79	6·88	4	4·55	1·87	1	0·33	0·70	106	116·99	102·73
6	14·15	7·13	2	5·20	2·48	Nil	Nil	0·52	76	132·56	119·04
7	12·74	6·68	2	1·55	1·79	Nil	Nil	0·38	81	73·57	102·25
5	12·55	7·43	1	0·50	1·38	1	0·42	0·46	88	180·87	119·59
6	15·47	(n)	3	3·75	(n)	1	0·12	(n)	104	110·60	(n)
33	79·13	36·85	14	16·06	11·30	2	0·79	2·57	451	596·52	584·25
6·60	15·82	7·37	2·80	3·21	2·26	0·40	0·16	0·51	90·20	119·30	116·85
11	15·08	6·52	6	2·67	1·03	1	0·31	0·23	116	102·69	90·31
12	7·10	5·71	5	1·77	0·87	1	2·31	0·25	105	81·62	82·51
12	13·49	5·22	5	2·78	0·76	1	1·14	0·23	108	90·73	79·51
8	9·05	5·62	6	1·95	1·11	1	0·60	0·10	94	86 85	82·32
4	4·23	5·20	4	3·65	0·85	Nil	Nil	0·16	68	78·21	83·23
11	5·07	4·16	5	1·37	0·97	2	0·34	0·11	113	84·63	71·57
11	11·28	4·45	5	2·78	1·11	2	1·10	0·23	86	73·53	76·02
6	11·42	5·75	6	3·27	1·04	Nil	Nil	0·22	84	104·58	91·05
75	76·67	42·68	42	20·14	7·74	8	5·80	1·53	774	702·84	656·52
9·37	9·58	5·33	5·25	2·52	0·97	1·00	0·73	0·19	96·75	87·86	82·07

(n) No ascertained.

Monthly and Annual Rainfall Table in the

Division.	District.	Station.	January.			February.			March.		
			Number of rainy days.	Rainfall.	Normal rainfall.	Number of rainy days.	Rainfall.	Normal rainfall.	Number of rainy days.	Rainfall.	Normal rainfall.
Chittagong ..	Noakhali ..	Noakhali (Obsy.) ..	1	0·23	0·27	4	1·78	1·13	Nil	0·06	2·65
		Feni	1	0·24	0·33	4	2·56	0·97	1	0·30	3·23
		Harishpur ..	Nil	Nil	0·25	2	0·70	0·87	Nil	0·08	2·18
		Ramganj	2	0·44	0·25	4	1·00	1·02	Nil	Nil	2·87
		Chhagalnaya ..	1	0·15	0·17	4	3·20	0·95	3	0·95	2·91
		Hatiya ..	1	0·42	0·15	1	1·80	1·01	Nil	Nil	2·06
		Lakhimpur ..	Nil	Nil	0·21	3	2·11	1·05	Nil	0·04	2·08
		Total ..	6	1·48	1·63	22	13·15	7·00	4	1·43	17·98
		District average ..	0·86	0·21	0·23	3·14	1·88	1·00	0·57	0·20	2·57
	Chittagong Hill Tracts.	Rangamati ..	Nil	0·05	0·32	3	2·32	1·04	2	0·52	2·83
		Bandarban ..	Nil	Nil	0·19	1	0·11	0·64	1	0·15	2·54
		Barkal	Nil	0·06	0·15	4	2·35	0·93	2	0·57	2·41
		Mahalchari ..	1	0·21	0·07	4	5·64	0·49	2	0·65	2·29
		Lama	Nil	Nil	0·03	1	0·26	0·86	1	0·88	1·01
		Ramgarh ..	1	0·15	0·09	4	6·18	0·55	2	1·62	3·15
		Manikseri ..	1	0·17	(n)	3	5·88	(n)	3	2·18	(n)
		Dighinala ..	1	0·15	(n)	6	3·31	(n)	3	1·11	(n)
		Mainmukh ..	Nil	0·09	(n)	6	2·15	(n)	3	1·65	(n)
		Kaptai	Nil	Nil	(n)	3	1·07	(n)	2	0·69	(n)
		Panchhari ..	2	0·28	(n)	5	4·14	(n)	2	0·86	(n)
		Nakhyongchhari ..	Nil	Nil	(n)	1	0·13	(n)	2	0·70	(n)
		Total ..	2	0·47	0·85	17	16·86	4·51	10	4·39	14·23
		District average ..	0·33	0·08	0·14	2·83	2·81	0·75	1·66	0·73	2·37
	Tripura State	Agartala ..	1	0·24	0·39	6	3·14	1·24	Nil	0·07	3·78
	Cooch-Behar ..	Dinhata	3	0·50	0·42	3	2·10	0·66	Nil	0·01	1·54
		Cooch-Behar (Obsy.)	Nil	0·19	0·19	4	2·70	0·87	Nil	Nil	1·91
		Mickliganj ..	2	0·25	0·28	5	3·37	0·79	Nil	Nil	1·31
		Mathabhanga ..	1	0·16	0·28	4	3·23	0·67	Nil	0·01	1·67
		Fulbaria (Tufanganj)	Nil	0·09	0·29	5	2·68	0·81	Nil	0·02	1·61
		Total ..	6	1·19	1·46	21	14·08	3·80	Nil	0·04	8·04
		District average ..	1·20	0·24	0·29	4·20	2·82	0·76	Nil	0·01	1·61

(n) Not ascertained.

Province of Bengal for the year 1934.

April.			May.			June.			July.		
Number of rainy days.	Rainfall.	Normal rainfall.	Number of rainy days.	Rainfall.	Normal rainfall.	Number of rainy days.	Rainfall.	Normal rainfall.	Number of rainy days.	Rainfall.	Normal rainfall.
2	2·51	6·40	12	11·27	11·40	18	22·67	21·49	23	27·20	24·35
5	2·19	6·23	12	12·65	10·98	18	22·79	22·89	21	25·44	24·29
3	1·60	4·45	8	8·33	10·15	16	24·31	21·68	17	20·76	27·73
4	2·47	4·92	7	4·95	9·56	12	17·36	17·15	15	18·54	17·12
6	2·45	8·57	12	11·02	11·03	15	18·20	20·51	19	23·65	23·94
2	1·80	6·16	6	7·53	10·44	14	20·22	22·66	15	25·50	26·01
2	2·58	6·67	9	8·20	10·17	14	23·27	20·80	14	17·82	19·37
24	15·60	43·40	66	58·95	73·78	107	148·82	147·18	124	158·91	164·81
3·43	2·23	6·20	9·43	8·42	10·53	15·28	21·26	21·03	17·71	22·70	23·54
7	2·23	5·01	12	12·10	9·75	17	13·63	17·85	19	27·20	18·94
5	2·93	5·26	12	9·76	10·13	16	24·85	20·07	15	30·03	21·99
5	4·83	6·43	13	11·27	8·60	26	21·54	18·64	28	26·59	21·10
4	5·35	5·82	14	7·28	5·54	23	16·17	15·30	22	21·45	17·86
2	0·47	6·47	8	7·33	6·37	22	28·37	26·80	19	41·42	34·46
5	5·15	5·90	11	9·38	5·92	16	18·99	17·33	24	26·26	18·74
6	4·93	(n)	13	8·34	(n)	21	23·83	(n)	21	34·98	(n)
5	4·71	(n)	9	15·85	(n)	21	19·30	(n)	23	23·63	(n)
8	4·22	(n)	12	9·45	(n)	18	19·43	(n)	27	29·01	(n)
6	4·35	(n)	14	11·45	(n)	21	20·44	(n)	23	32·98	(n)
6	5·88	(n)	12	11·51	(n)	19	19·51	(n)	22	15·92	(n)
3	0·48	(n)	6	7·23	(n)	23	25·40	(n)	26	37·62	(n)
28	20·06	34·89	70	57·12	46·31	120	123·55	116·08	127	172·95	133·09
4·67	3·50	5·81	11·67	9·52	7·72	20·00	20·59	19·35	21·17	28·83	22·18
5	2·44	6·54	12	14·38	11·31	16	24·52	15·41	19	17·58	12·10
8	4·94	4·37	20	12·43	13·66	19	15·89	25·99	19	23·01	19·97
8	3·21	5·43	21	16·37	15·80	21	19·03	32·91	19	35·63	30·34
8	4·24	3·68	12	12·28	11·76	18	24·96	25·06	19	55·28	24·04
6	3·00	4·42	20	9·91	13·13	19	16·36	28·28	18	44·13	26·23
5	3·56	6·59	23	19·01	15·90	23	26·21	20·10	16	41·56	28·94
35	18·95	24·49	96	70·00	70·25	100	102·45	141·34	91	199·61	129·52
7·00	3·79	4·90	19·20	14·00	14·05	20·00	20·49	28·27	18·20	39·92	25·90

(n) Not ascertained.

Monthly and Annual Rainfall Table in the

Division.	District.	Station.	August.			September.		
			Number of rainy days.	Rainfall.	Normal rainfall.	Number of rainy days.	Rainfall.	Normal rainfall.
Chittagong ..	Noakhali ..	Noakhali (Obsy.) ..	22	27·24	26·21	12	13·99	16·63
		Feni	20	19·99	24·41	19	18·82	14·68
		Harishpur ..	14	13·03	26·14	13	8·79	17·15
		Ramganj ..	12	13·53	17·63	12	11·22	12·10
		Chhagalnaya ..	18	23·17	28·72	10	6·97	14·53
		Hatiya	15	20·33	26·78	10	16·16	17·03
		Lakhimpur ..	14	24·42	19·78	12	14·48	14·70
		Total ..	115	142·61	164·67	88	85·43	106·82
		District average ..	16·43	20·38	23·53	12·57	12·21	15·26
	Chittagong Hill Tracts.	Rangamati ..	20	9·26	17·64	14	7·99	12·07
		Bandarban ..	12	12·80	18·05	13	7·53	12·21
		Barkal	27	14·60	19·36	23	18·03	14·51
		Mahalchari ..	23	11·94	17·70	12	5·84	12·79
		Lama	20	14·20	23·83	11	10·28	13·57
		Ramgarh ..	20	11·14	22·06	8	5·09	14·32
		Manikseri ..	24	16·72	(n)	11	5·45	(n)
		Dighinala ..	19	5·68	(n)	13	10·42	(n)
		Mainmukh ..	24	17·55	(n)	17	10·19	(n)
		Kaptai	25	15·33	(n)	18	7·25	(n)
		Panchhari ..	23	7·28	(n)	13	8·42	(n)
		Nakhyongchhari ..	20	18·92	(n)	18	9·17	(n)
		Total ..	122	73·94	118·64	81	54·26	79·47
		District average ..	20·33	12·32	19·77	13·50	9·04	13·25
	Tripura State	Agartala ..	21	12·84	11·79	9	4·15	9·64
	Cooch-Behar ..	Dinhata	15	12·38	17·75	14	9·98	19·42
		Cooch-Behar (Obsy.)	15	21·14	25·15	21	25·97	26·40
		Mickliganj ..	18	31·78	22·22	19	26·50	17·69
		Mathabhanga ..	15	26·57	22·23	17	26·61	20·06
		Fulbaria (Tufanganj)	17	13·38	20·99	18	25·91	23·83
		Total ..	80	105·25	108·34	89	114·97	107·40
		District average ..	16·00	21·05	21·67	17·80	22·99	21·48

(n) Not ascertained.

Dacca, the 9th March 1935.

Province of Bengal for the year 1934.

October.			November.			December.			Annual.		
Number of rainy days.	Rainfall.	Normal rainfall.	Number of rainy days.	Rainfall.	Normal rainfall.	Number of rainy days.	Rainfall.	Normal rainfall.	Number of rainy days.	Rainfall.	Normal rainfall.
8	9·52	8·36	5	2·54	1·74	2	0·99	0·28	109	120·00	120·91
8	11·30	7·44	6	2·44	1·94	1	1·02	0·52	116	114·74	117·97
8	8·07	9·17	3	3·67	1·57	Nil	Nil	0·45	84	85·24	121·79
4	3·85	0·37	Nil	Nil	1·13	1	1·25	0·22	78	74·61	90·84
7	8·50	8·74	4	3·00	1·54	Nil	Nil	0·35	99	101·26	116·96
5	8·00	9·84	3	3·29	2·00	1	0·90	0·39	73	105·95	126·59
5	9·10	7·76	6	3·44	1·16	1	1·20	0·23	80	106·66	103·98
45	58·34	57·68	27	18·38	11·08	6	5·36	2·44	634	708·46	798·42
6·43	8·33	8·24	3·86	2·62	1·58	0·86	0·77	0·35	90·57	101·21	114·06
6	8·74	6·60	3	3·67	1·73	Nil	Nil	0·56	103	87·71	94·34
8	14·12	7·02	4	4·15	1·82	Nil	Nil	0·49	87	106·43	100·41
8	9·12	7·35	4	3·96	1·01	Nil	Nil	0·64	140	112·02	101·73
9	13·51	6·13	5	4·92	1·29	2	0·50	0·01	121	92·96	85·38
5	16·39	4·71	3	3·50	2·57	Nil	Nil	0·09	92	123·10	120·77
4	3·70	5·52	3	2·90	1·93	1	0·41	0·00	99	90·97	95·51
5	11·80	(n)	4	3·24	(n)	2	0·57	(n)	114	118·09	(n)
3	9·05	(n)	4	2·69	(n)	1	0·12	(n)	108	96·02	(n)
6	9·11	(n)	5	3·89	(n)	1	0·24	(n)	127	106·98	(n)
7	9·32	(n)	5	4·80	(n)	Nil	Nil	(n)	124	107·68	(n)
5	5·82	(n)	5	2·41	(n)	2	0·35	(n)	116	82·38	(n)
8	20·33	(n)	5	4·81	(n)	1	0·37	(n)	113	125·16	(n)
40	65·58	37·33	22	23·10	10·95	3	0·91	1·79	642	614·09	598·14
6·67	10·93	6·22	3·67	3·85	1·83	0·50	0·15	0·30	107·00	102·35	99·69
8	13·79	5·14	4	2·05	1·06	1	0·44	0·30	102	95·64	78·70
7	7·83	5·82	Nil	Nil	0·25	Nil	Nil	0·09	108	89·07	109·94
6	10·22	7·68	1	0·56	0·23	1	0·28	0·10	117	135·30	147·91
5	5·03	5·19	Nil	Nil	0·14	Nil	0·04	0·12	106	163·73	112·28
6	6·78	5·67	Nil	0·09	0·18	Nil	Nil	0·08	106	136·85	122·90
5	8·59	7·15	Nil	0·07	0·32	Nil	0·03	0·15	112	141·11	135·68
29	38·45	31·51	1	0·72	1·12	1	0·35	0·54	549	666·06	627·81
5·80	7·69	6·30	0·20	0·14	0·22	0·20	0·07	0·11	109·80	133·21	125·56

(n) Not ascertained.

S. ABDULLAH, for *Director of Agriculture, Bengal.*

DAILY RAINFALL RECORDED IN BENGAL

Note—The total and the average rainfall for all districts have been

Division and district.	Station.	1	2	3	4	5	6	7
Presidency.								
24-Parganas ..	Saugar Island (Obsy.) ..	..	..	..	0·70	..	..	..
	Diamond Harbour ..	0·17	..	..	1·09	..	..	..
	Budge-Budge	0·16	..	..	1·32	..	..	..
	Canning Town	..	..	..	0·80	..	..	..
	Alipore (Obsy.)	0·14	..	..	1·03	..	..	..
	Barrackpore	..	..	0·75	..	..	..	..
	Dum-Dum	..	..	1·07	..	..	..	..
	Baraset	..	0·35	..	..	..	..	..
	Basirhat	..	..	..	0·66	..	..	..
	Gosaba	..	..	0·67	..	..	..	..
Nadia ..	Ranaghat	..	..	..	..	0·21	..	..
	Krishnagar (Obsy.) ..	..	..	..	0·37	..	..	..
	Chuadanga	..	..	..	0·09	..	..	..
	Meherpur	..	..	0·17	..	..	..	..
	Kushtia	..	..	..	0·24	..	..	..
	Haringhata	..	..	..	0·38	..	..	..
Murshidabad ..	Kandi	..	..	0·19	..	..	..	..
	Berhampore (Obsy.) ..	..	..	..	0·12	..	..	..
	Lalbagh	..	..	..	..	..	..	..
	Azimgunj*							
	Jangipur	..	..	..	0·02	..	..	..
	Lalgola	..	..	..	..	..	..	..
	Akriganj	..	..	..	0·05	..	..	..
	Patkabari	..	..	..	0·07	..	..	..
	Dumkal	..	..	..	..	..	..	..
	Kallyangunj (Ishanpur) ..	..	..	..	0·14	..	..	..
	Khargram	..	..	..	0·21	..	..	..
	Bharatpore	..	..	0·61	..	..	..	..
Jessore ..	Narail	..	..	1·02	..	..	..	..
	Jessore (Obsy.)	..	..	..	0·17	..	..	..
	Jhenida	..	..	0·07	..	..	..	..
	Magura	..	..	..	0·04	..	..	..
	Bongaon	..	..	..	0·22	0·02	..	..
Khulna ..	Satkhira (Obsy.)	0·01	..	..	0·60	..	..	..
	Bagerhat	..	..	..	..	..	..	..
	Khulna (Obsy.)	..	..	..	0·21	..	..	..
	Kaliganj	..	..	0·65	..	..	..	..
	Nakipur*							
	Dumuria	..	..	..	0·30	..	..	..
	Rampal	..	..	..	..	..	..	..
	Kalaroa	..	..	0·54	..	..	..	..
	Paikgachha (Ruruli) ..	..	..	..	0·44	..	..	..
	Mullahat	..	..	..	..	..	..	..
	Morelganj	..	0·05	..	..	..	..	..
	Islamkati	..	..	..	0·42	..	..	..
Burdwan.								
Burdwan ..	Kalna	..	..	..	0·40	..	..	..
	Burdwan (Obsy.)	0·12	..	..	0·46	..	..	..
	Katwa	..	..	..	0·42	..	..	..
	Asansol (Obsy.)	0·05	..	..	0·16	..	..	..
	Mankar	..	..	0·72	..	..	..	..
	Mangalkot	..	..	0·55	..	..	..	..
	Royna	0·16	..	..	0·50	..	..	..
	Monteswar*							
Birbhum ..	Suri	..	..	..	0·34	..	..	..
	Hetampur	..	..	..	0·32	..	..	..
	Rampurhat	..	..	..	0·20	..	..	..
	Bolpur	..	..	..	0·21	..	..	..
	Murarai*							
	Labpur	..	..	..	0·18	..	..	..
	Nalhati	..	..	..	..	..	..	..
	Mayureswar	..	..	..	..	..	..	..

*Not reported.

FOR THE MONTH OF FEBRUARY 1935.

calculated using the data of only those stations for which normals are available.

8	9	10	11	12	13	14	15	16	17	18	19	20
..	..	..	..	..	..	..	..	..	..	..	..	..
..	..	..	..	..	..	..	..	..	..	0·03	..	0·05
..	..	..	..	..	..	..	..	..	..	0·28	..	0·10
..	..	..	..	..	..	..	..	..	..	..	0·12	..
..	..	..	..	..	..	..	..	..	..	0·10	..	0·02
..	..	..	..	..	..	..	..	..	..	..	..	..
..	..	..	..	..	..	..	..	..	..	..	0·37	..
..	..	..	..	..	..	..	..	..	0·30	..	..	..
..	0·36	..	..	..	..	..	..	..	..	0·02	..	0·18
..	..	..	..	..	..	..	..	..	0·18	..	..	..
..	..	..	..	..	..	..	..	..	..	..	..	0·30
..	..	..	..	..	..	..	..	..	..	0·37	..	0·40
..	..	..	..	..	..	..	..	..	..	0·15	..	..
..	..	..	..	..	..	..	..	..	1·21	..	..	..
..	..	..	..	..	..	..	..	..	..	0·32	..	..
..	..	..	..	..	..	..	..	..	..	..	0·10	..
..	..	..	..	..	..	..	..	..	0·04	..	..	..
..	..	..	..	..	..	..	..	..	..	0·08	..	..
..	..	..	..	..	..	..	..	..	..	..	..	..
..	..	..	..	..	..	..	..	..	..	0·27	..	..
..	..	..	..	..	..	..	..	..	0·07	..	..	..
..	..	..	..	..	..	..	..	..	0·04	..	..	..
..	..	..	..	..	..	..	..	..	0·59	..	..	..
..	..	..	..	..	..	..	..	..	..	0·20	..	..
..	..	..	..	..	..	..	..	..	..	0·06	..	..
..	..	..	..	..	..	..	..	..	..	..	..	..
..	..	..	..	..	..	..	..	..	..	..	..	..
..	..	..	..	..	..	..	..	..	..	..	1·60	..
..	..	..	..	..	..	..	..	..	..	..	..	0·46
..	..	..	..	..	..	..	..	..	..	..	..	..
..	..	..	..	..	..	..	..	..	..	..	0·50	..
..	..	..	..	..	..	..	..	..	..	0·05	..	0·23
..	0·02	..	..	..	..	..	..	..	..	0·01	..	0·15
..	..	..	..	..	..	..	..	..	..	..	..	0·30
..	0·14	..	..	..	..	..	..	..	..	..	..	0·05
..	..	..	..	..	..	..	..	..	..	..	0·46	..
..	..	0·15	..	..	..	..	..	..	..	..	..	0·10
..	..	..	..	..	..	..	..	..	..	..	..	0·16
..	..	..	..	..	..	..	..	..	..	..	0·02	..
..	1·49	..	..	..	..	..	..	..	..	..	..	..
..	..	..	..	..	..	..	..	..	..	..	1·00	..
..	0·15	..	..	..	..	..	..	..	..	..	..	0·18
..	..	..	..	..	..	..	..	..	..	..	..	..
..	..	..	..	..	..	..	..	..	..	0·35	..	..
..	..	..	..	..	..	..	..	..	..	0·13	..	..
..	..	..	..	..	..	..	..	..	..	0·40	..	..
..	..	..	..	..	..	..	..	..	..	..	..	..
..	..	..	..	..	..	..	..	..	..	..	..	..
..	..	..	..	..	..	..	..	..	..	0·42	..	..
..	..	..	..	..	..	..	..	..	..	0·01	..	..
..	..	..	..	..	..	..	..	..	..	0·24	..	..
..	..	..	..	..	..	..	..	..	..	..	0·05	..
..	..	..	..	..	..	..	..	..	1·60	..	..	..
..	..	..	..	..	..	..	..	..	..	..	..	..
..	..	..	..	..	..	..	..	..	0·27	..	..	..
..	..	..	..	..	..	..	..	..	..	..	..	..

DAILY RAINFALL RECORDED IN BENGAL

Division and district.	Station.	21	22	23	24	25	26	27
Presidency.								
24-Parganas ..	Saugar Island (Obsy.) ..	..	..	..	..	..	..	..
	Diamond Harbour ..	..	..	..	..	..	..	..
	Budge-Budge	..	..	..	..	0·03	..	..
	Canning Town	..	..	..	..	..	..	..
	Alipore (Obsy.)	..	..	..	..	..	..	..
	Barrackpore	..	..	..	..	..	..	..
	Dum-Dum	..	..	..	..	..	..	..
	Baraset	..	..	..	..	..	..	..
	Basirhat	..	..	..	..	..	..	..
	Gosaba	..	..	..	..	..	..	..
Nadia ..	Ranaghat	..	..	..	..	..	..	..
	Krishnagar (Obsy.) ..	..	..	..	0·60	0·02	..	..
	Chuadanga	..	..	..	0·07	..	..	..
	Meherpur	..	..	..	0·39	..	..	..
	Kushtia	..	..	..	2·14	..	..	..
	Haringhata	..	..	0·10	..	..	..	..
Murshidabad ..	Kandi	..	..	0·41	..	..	..	..
	Berhampore (Obsy.) ..	..	..	..	0·37	..	..	..
	Lalbagh	..	0·06	..	..	0·54	..	..
	Azimgunj*							
	Jangipur	..	..	..	0·28	..	..	..
	Lalgola	..	..	0·57	..	..	..	..
	Akriganj	..	..	..	0·60	..	..	..
	Patkabari	..	..	0·71	..	..	..	..
	Dumkal	..	..	..	0·54	..	..	..
	Kallyangunj (Ishanpur) ..	..	..	..	0·45	..	..	..
	Khargram	..	..	..	0·45	..	..	..
	Bharatpore	..	..	..	0·62	..	..	..
Jessore ..	Narail	..	0·02	0·60	1·15	..	..	..
	Jessore (Obsy.)	..	..	0·04	0·13	0·07	..	..
	Jhenida	..	..	0·16	..	..	..	0·14
	Magura	..	..	..	..	..	..	..
	Bongaon	..	..	..	0·17	..	..	..
Khulna ..	Satkhira (Obsy.)	..	..	..	..	..	..	..
	Bagerhat	..	..	..	..	..	..	..
	Khulna (Obsy.)	..	..	..	..	..	..	..
	Kaliganj	..	..	..	..	..	..	..
	Nakipur*							
	Dumuria	..	..	..	..	..	..	..
	Rampal	..	..	..	..	..	..	..
	Kalaroa	..	..	0·12	..	..	..	..
	Paikgachha (Raruli) ..	..	..	..	..	0·06	..	..
	Mullahat	..	..	..	..	..	..	..
	Morelganj	..	..	..	..	..	..	..
	Islamkati	..	..	..	..	..	..	..
Burdwan.								
Burdwan ..	Kalna	..	..	..	..	..	..	..
	Burdwan (Obsy.)	..	..	..	0·20	..	..	..
	Katwa	..	..	..	0·20	..	..	..
	Asansol (Obsy.)	..	..	..	0·32	..	..	..
	Mankar	..	..	..	1·11	..	..	..
	Mangalkot	..	..	..	0·26	..	..	..
	Royna	..	..	..	1·00	..	..	..
	Monteswar*							
Birbhum ..	Suri	..	..	..	0·25	..	..	..
	Hetampur	..	..	0·25	..	..	..	..
	Rampurhat	..	..	0·70	..	..	..	..
	Bolpur	..	..	..	0·33	..	..	..
	Murarai*							
	Labpur	..	..	..	0·15	..	..	..
	Nalhati	..	..	0·05	..	..	..	..
	Mayureswar	..	..	0·10	..	..	..	..

*Not reported.

FOR THE MONTH OF FEBRUARY 1935.

28	29	30	31	Number of rainy days.	Average number of rainy days.	Total rainfall for the month.	Normal rainfall for the month.	Heaviest rainfall during the month.	Total rainfall from 1st December 1934 to 28th February 1935.	Normal rainfall from 1st December 1934 to 28th February 1935.
..				1	1·8	0·70	1·12	0·70	1·78	1·69
..				2	2·1	1·34	1·30	1·09	1·47	2·03
..				4	2·1	1·89	1·37	1·32	2·42	2·05
..				2	1·3	0·92	0·84	0·80	1·42	1·31
..				3	1·6	1·29	1·10	1·03	2·14	1·64
..				1	1·9	0·75	1·28	0·75	2·39	1·98
..				2	1·7	1·44	1·12	1·07	2·45	1·76
..				2	2·0	0·65	1·28	0·35	1·15	1·99
..				3	1·7	1·22	1·03	0·66	2·01	0·67
..				2	(n)	0·85	(n)	0·67	1·02	(n)
..				2	1·8	0·51	1·21	0·30	2·06	1·77
..				4	1·7	1·76	1·20	0·60	2·58	1·73
0·07				1	1·7	0·38	1·11	0·15	1·14	1·63
0·06				3	1·8	1·83	1·03	1·21	2·47	1·53
..				3	1·7	2·70	0·96	2·14	3·42	1·41
..				3	0·5	0·58	0·35	0·38	0·84	0·60
..				2	1·7	0·64	0·92	0·41	4·63	1·43
..				2	1·7	0·57	0·88	0·37	3·33	1·35
..				1	1·4	0·60	0·70	0·54	4·08	1·13
					1·6		0·71			1·22
..				2	1·6	0·57	0·71	0·28	2·03	1·27
..				1	1·4	0·64	0·85	0·57		1·41
..				1	1·5	0·69	0·66	0·60	5·09	1·14
..				2	1·5	1·37	0·68	0·71	3·30	0·97
..				2	1·4	0·74	0·70	0·54	1·83	1·17
..				2	1·9	0·65	0·82	0·45	4·03	1·86
..				2	(n)	0·66	(n)	0·45		(n)
..				2	(n)	1·23	(n)	0·62	2·14	(n)
..				4	2·0	4·39	1·25	1·60	5·59	1·92
..				3	1·9	0·87	1·34	0·46	2·67	1·90
..				2	1·8	0·37	1·23	0·16	1·00	1·77
..				1	1·9	0·54	1·09	0·50	1·54	1·60
..				3	1·7	0·69	1·17	0·23	0·86	1·76
..				2	1·0	0·79	0·75	0·60	3·22	1·35
..				1	1·8	0·30	1·16	0·30	1·30	1·81
..				2	1·4	0·40	0·84	0·21	0·29	1·74
..				2	2·0	1·11	1·43	0·65	2·11	2·13
					1·4		1·00			1·36
..				3	2·1	0·55	1·31	0·30	1·74	1·88
..				1	1·9	0·16	1·24	0·16	0·16	1·83
..				2	1·9	0·68	0·99	0·54	1·54	1·58
..				2	2·0	1·99	1·20	1·40	1·99	2·00
..				1	2·1	1·00	1·40	1·00	4·33	1·89
..				2	2·0	0·38	1·46	0·18		2·12
..				1	2·1	0·42	1·25	0·42	1·56	1·84
..				2	1·7	0·75	1·14	0·40	3·83	1·68
..				4	1·8	0·91	1·25	0·46	4·01	1·76
..				3	1·7	1·02	1·09	0·42	2·34	0·61
..				2	2·1	0·53	1·04	0·32	2·49	1·96
..				2	1·4	1·83	0·92	1·11	3·80	1·47
..				3	1·1	1·23	0·65	0·55		0·73
..				3	1·7	1·67	1·13	1·00	4·34	1·30
					2·4		1·51			1·51
..				3	1·8	0·83	0·86	0·34	2·12	1·33
..				2	1·7	0·62	0·91	0·32	1·40	1·63
..				3	1·7	2·50	0·79	1·60	5·55	1·36
..				2	1·5	0·54	0·72	0·33	2·69	1·18
					1·4		0·59			0·99
..				2	1·4	0·33	0·54	0·18	1·18	0·88
..				1	(n)	0·32	(n)	0·27	1·57	(n)
..				1	(n)	0·10	(n)	0·10	1·04	(n)

(n) Not ascertained.

DAILY RAINFALL RECORDED IN BENGAL

Division and district.	Station.	1	2	3	4	5	6	7
Burdwan—*concld.*								
Bankura ..	Bankura (Obsy.)	0·21	..	..	0·67	..	..	..
	Vishnupur	0·28	..	..	0·66	..	..	..
	Maliara	..	..	..	0·55	..	..	..
	Khatra	0·50	..	..	0·65	..	..	..
	Indas	0·23	..	0·64	..	..	..	..
	Kotalpur	..	..	0·55	..	..	..	..
	Onda	0·03	..	..	0·50	..	..	..
	Gangajalghati	0·13	..	..	0·42	..	..	..
	Raipur	0·38	..	..	0·99	..	..	..
	Sonamukhi	0·15	..	0·40	..	..	..	..
	Taldangra	..	..	..	..	..	..	..
	Saranga	0·30	..	..	1·15	..	..	..
	Indpur	0·17	..	..	0·80	..	..	..
	Arhara*							
	Barjora	0·08	..	..	0·46	..	..	..
	Simlapal	..	..	0·70	..	..	..	..
	Mejia	0·13	..	..	..	..	..	..
	Siromanipur	..	..	0·60	..	..	..	..
	Palasdanga	..	..	..	0·56	..	..	..
	Chatna	..	..	..	..	..		..
	Ranibandh	1·76	..	..	1·35	..	..	..
	Saltora	..	..	..	..	..	..	..
	Joypur	0·18	..	..	0·49	..	..	..
	Ambikanagar*							
	Joyrampur*							
Midnapore ..	Contai	..	..	1·01	..	..	..	..
	Tamluk	..	..	1·22	..	..	..	..
	Midnapore (Obsy.) ..	0·27	..	..	1·40	..	..	..
	Ghatal	0·21	..	..	0·80	..	..	..
	Kukrahati	..	..	1·27	..	..	..	..
	Amlagura	0·40	..	..	0·75	..	..	..
	Panskura	0·20	..	..	1·30	..	..	..
	Dantan	0·24	..	..	0·97	..	..	..
	Chandrakona*							
	Pachet	..	..	..	2·35	..	..	..
	Bhagwanpur	0·19	..	..	2·02	..	..	..
	Kashiary	..	..	..	2·18	..	..	..
	Nayabasan	0·18	..	..	1·30	..	..	..
	Silda (Belpabari)	0·01	..	0·94	..	..	..	..
	Goaltore	0·27	..	..	0·81	..	..	..
	Salboni	0·10	..	..	0·63	..	..	..
	Narayangarh*							
	Ramnagar	..	..	0·71	..	..	..	..
	Mohanpur	..	..	..	..	..	..	..
	Jenka (Khajri)	..	..	..	2·65	..	..	..
	Nandigram*							
	Moyna	..	..	..	..	..	..	..
	Pingla*					—		
	Narajole*							
	Kolaghat (Dainan) ..	0·15	..	..	1·17	..	..	..
	Balichak	0·11	..	..	1·27	..	..	..
	Jhargram	..	..	0·95	..	..	..	..
	Kharagpur	0·07	..	1·16	..	..	..	..
Hooghly ..	Serampore	..	..	0·49	..	..	..	..
	Hooghly	0·04	..	..	0·60	..	..	..
	Arambagh	0·20	..	..	0·50	..	..	..
	Chanditala	0·10	..	..	0·91	..	..	..
	Tentulia	..	..	0·35	..	..	..	..
	Boinchee	..	..	..	0·48	..	..	..
	Khanakul	..	..	0·86	..	..	..	..
	Tarakeswar	..	..	0·50	..	..	..	..
Howrah ..	Howrah	0·17	..	..	0·35	..	..	..
	Uluberia	0·26	..	..	1·90	..	..	..
	Amta	0·40	..	..	0·90	..	..	..
Rajshahi.								
Rajshahi ..	Boalia (Obsy.)	..	..	..	0·65	..	..	..
	Nator	..	..	..	..	..	..	..
	Naogaon	..	..	..	..	..	..	..
	Lalpur	..	..	..	..	..	..	..
	Manda	..	..	..	..	..	..	..
	Mahadebpur	..	..	..	..	..	..	..
	Tanor*							
	Chaugram	..	..	..	..	..	..	..
	Joari	..	..	..	..	..	..	..
	Badalgachi	..	..	..	..	..	..	..

*Not reported.

FOR THE MONTH OF FEBRUARY 1935.

8	9	10	11	12	13	14	15	16	17	18	19	20
..	..	..	..	..	..	..	..	..	..	..	..	..
..	..	..	..	..	..	..	..	..	..	..	..	..
..	..	..	..	..	..	..	..	..	..	..	..	..
..	..	..	..	..	..	..	..	..	..	..	..	..
..	..	..	..	..	..	..	..	..	..	..	..	..
..	..	..	..	..	..	..	..	..	..	..	..	..
..	..	..	..	..	..	..	..	..	..	..	..	..
..	..	..	..	..	..	..	..	..	..	..	..	..
..	..	..	..	..	..	..	..	..	..	..	..	..
..	..	..	..	..	..	..	..	..	..	..	..	..
..	..	..	..	..	..	..	..	..	..	..	..	..
..	..	..	..	..	..	..	..	..	..	..	..	..
..	..	..	..	..	..	..	..	..	..	..	..	..
..	..	..	..	..	..	..	..	..	..	..	..	..
..	..	..	..	..	..	..	..	..	..	..	..	..
..	..	..	..	..	..	..	..	..	..	..	..	..
..	..	..	..	..	..	..	..	..	..	..	..	..
..	..	..	..	..	..	..	..	..	..	..	..	..
..	..	..	..	..	..	..	..	..	..	..	..	..
..	..	..	..	..	..	..	..	..	..	..	..	..
..	..	..	..	..	..	..	..	..	..	..	..	..
..	..	..	..	..	..	..	..	..	..	..	..	..
..	..	..	..	..	..	..	..	..	..	..	..	..
..	..	..	..	..	..	..	..	..	..	..	0·14	..
..	..	..	..	..	..	..	..	..	..	..	..	..
..	..	..	..	..	..	..	..	..	..	0·21	..	0·17
..	..	..	..	..	..	..	..	..	..	0·35	..	..
..	..	..	..	..	..	..	..	..	..	..	..	..
..	..	..	..	..	..	..	..	..	..	0·10	..	0·38
..	..	..	..	..	..	..	..	..	..	..	..	..
..	..	..	..	..	..	..	..	..	..	..	..	..
..	..	..	..	..	..	..	..	..	..	..	..	..
..	..	..	..	..	..	..	..	..	..	..	..	..
..	..	..	..	..	..	..	..	..	..	..	..	..
..	..	..	..	..	..	..	..	..	..	..	..	..
..	..	..	..	..	..	..	..	..	..	..	..	..
..	..	..	..	..	..	..	..	..	..	..	..	..
..	..	..	..	..	..	..	..	..	..	..	0·27	..
0·21	..	..	..	..	..	..	..	..	..	..	..	..
..	..	..	..	..	..	..	..	..	..	..	..	..
..	..	..	..	..	..	..	..	..	..	..	..	..
..	..	..	..	..	..	..	..	..	..	0·24	0·09	..
..	..	..	..	..	..	..	..	..	..	..	..	..
..	..	..	..	..	..	..	..	..	..	..	..	..
..	..	..	..	..	..	..	..	..	..	..	..	..
..	..	..	..	..	..	..	..	..	..	..	0·30	..
..	..	..	..	..	..	..	..	..	..	0·15	..	0·22
..	..	..	..	..	..	..	..	..	..	1·10	..	0·20
..	..	..	..	..	..	..	..	..	..	..	..	0·07
..	..	..	..	..	..	..	..	..	..	..	0·19	..
..	..	..	..	..	..	..	..	..	..	..	0·07	..
..	..	..	..	..	..	..	..	..	0·06	..	..	..
..	..	..	..	..	..	..	..	..	0·15	..	..	..
..	..	..	..	..	..	..	..	..	..	0·03	..	0·01
..	..	..	..	..	..	..	..	..	..	0·28	..	0·10
..	..	..	..	..	..	..	..	..	..	0·05	..	0·05
..	..	..	..	..	..	..	..	..	..	0·40	..	0·04
..	..	..	..	..	..	..	..	..	0·25	..	0·39	..
..	..	..	..	..	..	..	..	..	..	0·27	..	0·15
..	..	..	..	..	..	..	..	..	0·30	..	..	..
..	..	..	..	..	..	..	..	..	0·20	..	..	..
..	..	..	..	..	..	..	..	..	..	..	..	..
..	..	..	..	..	..	..	..	..	..	..	..	1·12
..	..	..	..	..	..	..	0·10	..	..	..	0·19	..
..	..	..	..	..	..	..	..	..	..	..	..	..

DAILY RAINFALL RECORDED IN BENGAL

Division and district.	Station.	21	22	23	24	25	26	27
Burdwan—*concld.*								
Bankura ..	Bankura (Obsy.)	..	..	..	0·01	..	..	..
	Vishnupur	..	..	0·18	..	..	..	..
	Mahara	..	..	..	0·48	..	..	..
	Khatra	..	..	..	..	..	..	..
	Indas	..	..	..	0·50	..	..	..
	Kotalpur	..	..	..	..	..	..	..
	Onda	..	..	..	0·20	..	..	..
	Gangajalghati	..	..	..	0·68	..	..	..
	Raipur	..	..	..	..	..	..	..
	Sonamukhi	..	..	..	0·20	..	..	..
	Taldangra	..	..	..	0·34	..	..	..
	Saranga	..	..	..	..	..	..	..
	Indpur	..	..	..	0·08	..	..	..
	Arhara*							
	Barjora	..	..	..	0·61	..	..	..
	Simlapal	..	..	..	..	..	..	..
	Mejia	..	..	0·11	..	..	..	..
	Siromanipur	..	..	..	..	..	..	..
	Palasdanga	..	..	..	0·73	..	..	..
	Chatna	..	..	0·42	..	..	..	..
	Ranibandh	..	..	..	..	..	..	..
	Saltora	..	..	..	..	..	..	..
	Joypur	..	..	..	0·24	..	..	..
	Ambikanagar*							
	Joyrampur*							
Midnapore ..	Contai	..	..	..	..	..	..	..
	Tamluk	..	..	..	..	..	..	..
	Midnapore (Obsy.) ..	..	..	..	0·35	..	..	..
	Ghatal	..	..	..	0·01	..	..	..
	Kukrahati	..	..	..	..	..	..	..
	Amlagura	..	..	..	0·13	..	..	..
	Panskura	..	..	..	0·03	..	..	..
	Dantan	..	..	..	..	..	..	..
	Chandrakona*							
	Pachet	..	..	..	..	..	..	..
	Bhagwanpur	..	..	..	..	..	..	..
	Kashiary	..	..	..	0·04	..	..	..
	Nayabasan	..	..	..	..	..	..	..
	Silda (Belpabari) ..	..	..	..	..	..	..	..
	Goaltore	..	..	..	..	..	..	..
	Salboni	..	0·22	..	..	..	..	..
	Narayangarh*							
	Ramnagar	..	..	..	..	..	..	0·01
	Mohanpur	..	..	..	..	..	..	..
	Jenka (Khajri)	..	..	..	..	..	..	..
	Nandigram*							
	Moyna	..	..	..	..	..	..	..
	Pingla*						—	
	Narajole*							
	Kolaghat (Dainan) ..	..	..	..	..	..	..	..
	Balichak	..	..	..	..	..	..	..
	Jhargram	..	..	..	..	..	..	..
	Kharagpur	..	..	0·11	..	..	..	..
Hooghly ..	Serampore	..	..	..	..	..	..	..
	Hooghly	..	..	..	..	0·02	..	..
	Arambagh	..	..	..	0·13	..	..	..
	Chanditala	..	..	..	..	..	..	..
	Tentulia	..	..	..	..	..	..	..
	Boinchee	..	..	..	0·29	..	..	..
	Khanakul	..	..	..	..	0·09	..	..
	Tarakeswar	..	..	0·05	..	..	..	..
Howrah ..	Howrah	..	..	..	..	..	..	..
	Uluberia	..	..	..	..	..	..	..
	Amta	..	..	..	..	..	..	..
Rajshahi.								
Rajshahi ..	Boalia (Obsy.)	..	..	..	0·36	..	..	..
	Nator	..	..	0·48	..	..	..	..
	Naogaon	..	..	..	0·30	..	..	..
	Lalpur	..	..	0·70	..	..	..	..
	Manda	..	..	0·40	..	..	..	..
	Mahadebpur	..	..	0·10	..	..	..	..
	Tanor*							
	Chaugram	..	..	..	0·14	..	..	..
	Joari	..	..	..	..	..	0·15	..
	Badalgachi	..	..	0·47	..	..	..	..

*Not reported.

FOR THE MONTH OF FEBRUARY 1935.

28	29	30	31	Number of rainy days.	Average number of rainy days.	Total rainfall for the month.	Normal rainfall for the month.	Heaviest rainfall during month.	Total rainfall from 1st December 1934 to 28th February 1935.	Normal rainfall from 1st December 1934 to 28th February 1935.
..				2	1·9	0·89	1·04	0·67	1·47	1·63
..				3	1·7	1·12	1·21	0·66	2·05	1·71
..				2	1·8	1·03	0·96	0·55	2·95	1·54
..				2	1·8	1·15	1·09	0·65	2·32	1·70
..				3	1·4	1·37	1·00	0·64	3·03	1·46
..				1	1·5	0·55	1·10	0·55	1·98	1·55
..				2	1·8	0·73	1·06	0·50	1·24	1·45
..				3	1·4	1·23	0·88	0·68	2·67	1·39
..				2	1·8	1·37	1·27	0·99	2·01	1·90
..				3	1·7	0·75	1·21	0·40	0·75	1·73
..				1	1·4	0·34	0·84	0·34	0·69	1·17
..				2	1·2	1·45	0·79	1·15	2·12	1·19
..				2	1·0	1·05	0·87	0·80	2·05	1·17
					(*n*)		(*n*)			(*n*)
..				2	(*n*)	1·15	(*n*)	0·61	3·38	(*n*)
..				1	(*n*)	0·70	(*n*)	0·70	1·90	(*n*)
..				2	(*n*)	0·24	(*n*)	0·13		(*n*)
..				1	(*n*)	0·60	(*n*)	0·60	1·29	(*n*)
..				2	(*n*)	1·29	(*n*)	0·73		(*n*)
..				1	(*n*)	0·42	(*n*)	0·42	0·98	(*n*)
..				2	(*n*)	3·11	(*n*)	1·76	3·23	(*n*)
..				Nil	(*n*)	Nil	(*n*)	Nil	Nil	(*n*)
..				3	(*n*)	0·91	(*n*)	0·49		(*n*)
					(*n*)		(*n*)			(*n*)
					(*n*)		(*n*)			(*n*)
..				1	1·7	1·01	1·29	1·01	1·27	1·98
..				2	1·8	1·36	1·17	1·22	1·56	1·74
..				3	1·8	2·02	1·20	1·40	2·79	1·91
..				4	1·6	1·40	0·95	0·80	1·93	1·50
..				2	1·7	2·62	1·19	1·27	2·90	1·76
..				3	1·7	1·28	1·13	0·75	1·76	1·70
..				4	1·8	2·01	1·18	1·30	2·46	1·83
..				2	1·9	1·21	1·19	0·97	1·93	1·79
					1·4		1·07			1·62
..				1	1·2	2·35	0·95	2·35	2·72	1·27
..				2	1·5	2·21	1·03	2·02	2·72	1·44
..				1	1·0	2·22	1·17	2·18	5·60	1·51
..				2	0·9	1·48	0·65	1·30	3·13	1·45
..				1	1·9	0·95	1·05	0·94	2·52	1·54
..				2	0·7	1·08	0·82	0·81	2·54	1·28
..				3	1·5	0·95	0·88	0·63	1·57	1·11
					1·3		0·89			1·77
..				2	1·5	0·99	0·98	0·71	1·21	1·34
..				1	2·0	0·21	0·93	0·21	0·42	1·23
..				1	1·6	2·65	0·83	2·65	3·05	1·10
					1·3		0·99			1·36
..				Nil	1·9	Nil	1·49	Nil	Nil	1·62
					1·9		2·25			2·43
					1·8		1·50			1·84
..				3	(*n*)	1·65	(*n*)	1·17	2·06	(*n*)
..				2	(*n*)	1·38	(*n*)	1·27	2·25	(*n*)
..				1	(*n*)	0·95	(*n*)	0·95	2·28	(*n*)
..				2	(*n*)	1·34	(*n*)	1·16	2·25	(*n*)
..				2	2·0	0·79	1·21	0·49	1·24	1·79
..				3	1·7	1·03	1·21	0·60	2·79	1·82
..				5	1·7	2·13	1·07	1·10	3·63	1·62
..				2	(*n*)	1·08	(*n*)	0·91		(*n*)
..				2	(*n*)	0·54	(*n*)	0·35	0·87	(*n*)
..				2	(*n*)	0·84	(*n*)	0·48		(*n*)
..				1	(*n*)	1·01	(*n*)	0·86	1·91	(*n*)
..				2	(*n*)	0·70	(*n*)	0·50		(*n*)
..				2	1·7	0·56	1·11	0·35	1·90	1·70
..				4	1·8	2·54	1·11	1·90	2·92	1·68
..				2	1·8	1·40	1·49	0·90	1·60	2·14
..				3	1·5	1·45	0·58	0·65	3·65	0·99
..				3	1·5	1·12	0·74	0·48	1·93	1·29
0·04				3	1·4	0·76	0·71	0·30	0·88	1·15
..				2	1·5	1·00	0·78	0·70	1·70	1·20
..				2	1·2	0·60	0·57	0·40	0·90	1·02
..				1	1·2	0·10	0·67	0·10		1·15
					1·4		0·52			1·18
..				2	(*n*)	1·26	(*n*)	1·12		(*n*)
..				3	(*n*)	0·44	(*n*)	0·19		(*n*)
..				1	(*n*)	0·47	(*n*)	0·47	1·37	(*n*)

(*n*) Not ascertained.

DAILY RAINFALL RECORDED IN BENGAL

Division and district.	Station.	1	2	3	4	5	6	7
Rajshahi—*concld.*								
Dinajpur ..	Nithpur	..	..	..	..	..	..	..
	Nawabganj	..	..	..	..	..	..	..
	Gangarampur	..	..	..	..	..	..	..
	Itahar	..	..	..	..	..	..	..
	Raiganj	..	..	..	..	..	..	..
	Dinajpur (Obsy.)	..	..	..	..	..	..	..
	Balurghat	..	..	..	..	..	..	..
	Thakurgaon	..	..	..	..	..	..	..
	Setabganj	..	..	..	..	..	..	..
	Ramganj	..	..	..	..	..	..	..
	Atwari	..	..	..	..	..	..	..
	Birganj	..	..	..	..	..	..	..
	Parbatipur	..	..	..	..	..	..	..
	Patnitola	..	..	..	..	..	..	..
	Sapahar*							
Jalpaiguri ..	Jalpaiguri (Obsy.)	..	..	..	..	0·47	0·01	..
	Alipur Duars	..	..	..	..	0·11	0·12	..
	Falakata	..	..	..	..	0·53	..	..
	Debiganj	..	..	..	..	..	..	..
	Buxa	..	..	..	0·12	..	0·04	..
	Kalchini	..	..	..	..	0·20	0·01	..
	Kumargram*							
Darjeeling ..	Siliguri	..	..	..	..	0·47	..	..
	Darjeeling (Obsy.) ..	..	..	..	..	0·12	0·28	0·13
	Kalimpong (Obsy.) ..	..	..	..	..	0·03	0·15	0·02
	Mongpoo	..	..	..	0·04	0·03	0·22	0·06
	Kurseong	..	..	..	..	0·20	0·64	..
	Podong	..	..	..	..	0·04	0·11	0·22
Rangpur ..	Bhawaniganj (Gaibandha) ..	..	..	..	..	..	..	..
	Rangpur (Obsy.)	..	..	..	..	..	..	..
	Jurganj	..	..	..	..	..	..	..
	Kurigaon	..	..	..	..	0·15	0·10	..
	Gobindganj*							
	Bagdogra (Nilphamari) ..	..	..	..	..	..	..	..
	Ulipur	..	..	..	..	0·38	..	..
	Sunderganj	..	..	..	..	0·14	..	..
	Saidpur	..	..	..	..	..	..	..
Bogra ..	Sherpur	..	..	..	..	..	..	..
	Nowkhilla	..	..	..	..	..	..	..
	Bogra (Obsy.)	..	..	..	..	..	..	..
	Panchbibi	..	..	..	..	..	..	..
	Khotlal*							
	Adamdighi	..	..	..	..	..	..	..
	Dubchanchia	..	..	..	..	..	..	..
Pabna ..	Shazadpur	..	..	..	..	..	..	..
	Pabna	..	..	..	0·05	..	..	..
	Sirajganj (Obsy.)	..	..	..	..	..	..	..
	Iswardi	..	..	..	..	..	..	..
Malda ..	Malda (Obsy.)	..	..	..	0·01	..	..	..
	Chanchal	..	..	..	0·05	..	..	..
	Gazol	..	..	..	..	..	..	..
	Sibganj	..	..	..	..	..	..	..
	Gomastapur	..	..	..	..	..	..	..
	Nawabganj*							
Dacca.								
Dacca ..	Munshiganj	..	..	..	..	..	..	..
	Dacca	..	..	..	..	0·01	..	..
	Nawabganj	..	..	..	..	..	..	..
	Narayanganj (Obsy.) ..	..	..	..	..	0·01	..	..
	Narsingdi	..	..	..	..	..	..	..
	Manickganj	..	..	..	..	..	..	..
	Joydebpur	..	..	..	..	..	..	..
	Kapasia	..	..	..	..	..	..	..

*Not reported.

FOR THE MONTH OF FEBRUARY 1935.

8	9	10	11	12	13	14	15	16	17	18	19	20
..	..	..	..	..	..	..	..	..	..	0·30	..	..
..	..	..	..	..	..	..	..	..	0·11	..	..	..
..	..	..	..	..	..	..	..	..	..	..	..	..
..	..	..	..	..	..	..	..	..	0·18	..	..	..
..	..	..	..	..	..	..	..	..	..	..	..	..
..	..	..	..	..	..	..	..	..	..	0·01	..	..
..	..	..	..	..	..	..	..	..	..	0·35	..	..
..	..	..	..	..	..	..	..	..	..	..	..	..
..	..	..	..	..	..	..	..	..	..	..	..	..
..	..	..	..	..	..	..	..	..	..	..	..	..
..	..	..	..	..	..	..	..	..	..	..	..	..
..	..	..	..	..	..	..	..	..	..	..	..	..
..	..	..	..	..	..	..	..	..	0·02	0·01	..	..
..	0·02	..	..	..	..	..	..	..	0·18	0·64	..	0·05
..	0·23	..	..	..	..	..	..	..	..	..	1·35	..
0·13	..	..	..	..	..	..	..	..	..	0·20	1·04	..
..	..	..	..	..	..	..	..	..	0·15	..	..	..
0·98	0·05	..	..	..	..	..	..	..	0·57	0·14	..	..
0·22	0·36	..	..	..	..	..	..	..	..	0·46	0·27	..
..	0·01	..	..	..	..	..	..	..	0·56	0·13	..	..
0·16	0·02	..	..	..	..	..	..	..	0·45	..	..	..
..	0·21	..	..	..	..	..	..	..	0·31	0·40	..	0·13
..	0·03	..	..	..	..	..	..	..	0·42	0·15	..	0·10
..	0·35	..	..	..	..	..	..	..	0·46	0·10	0·12	..
0·04	0·55	0·01	..	..	..	..	..	..	0·45	0·45	0·04	0·18
..	..	..	..	..	..	..	..	..	..	0·14	..	..
..	..	..	..	..	..	..	..	..	..	..	..	..
..	..	..	..	..	..	..	..	..	..	..	..	..
..	..	..	..	..	..	..	..	..	..	0·11	0·17	..
..	..	..	..	..	..	..	..	..	0·03	..	..	..
..	..	..	..	..	..	..	..	..	..	..	..	..
0·18	..	..	..	..	..	..	..	..	..	..	..	..
..	..	..	..	..	..	..	..	..	..	..	..	..
..	..	..	..	..	0·45	..	..	..	..	..	..	0·53
..	..	..	..	..	..	..	..	..	..	..	0·26	..
..	..	..	..	..	..	..	..	..	..	0·20	..	0·02
..	..	..	..	..	..	..	..	..	0·07	..	..	..
..	..	..	..	..	..	..	..	..	0·55	..	0·55	..
..	..	..	..	..	..	..	..	..	..	0·63	0·15	..
..	..	..	..	..	..	..	..	..	0·18	..	0·18	..
..	..	..	..	..	..	..	..	..	..	0·23	..	..
..	..	..	..	..	..	..	..	..	..	0·21	..	0·17
..	..	..	..	..	..	..	..	..	..	0·42	..	..
..	..	..	..	..	..	..	..	..	..	0·20	..	..
..	..	..	..	..	..	..	..	..	..	0·05	..	..
..	..	..	..	..	..	..	..	..	..	0·23	..	..
..	..	..	..	..	..	..	..	..	..	..	..	0·60
..	..	..	..	..	..	..	..	..	..	..	..	*0·30*
..	..	..	..	..	..	..	..	..	..	..	..	..
..	..	..	..	..	..	..	..	..	..	0·15	..	0·21
..	..	..	..	..	..	..	..	..	..	0·04	..	0·12
..	..	..	..	..	..	..	..	..	..	0·17	..	0·26
..	..	..	..	..	..	..	..	..	..	0·42	..	0·53
..	..	..	..	..	..	..	..	..	0·05	..	..	..
..	..	..	..	..	..	..	..	..	0·25	..	0·10	..
..	..	..	..	..	..	..	..	..	0·01	..	..	..

DAILY RAINFALL RECORDED IN BENGAL

Division and district.	Station.	21	22	23	24	25	26	27
Rajshahi—*concld.*								
Dinajpur ..	Nithpur	..	..	..	0·38	..	..	..
	Nawabganj	..	..	..	0·14	..	..	..
	Gangarampur	..	..	..	0·22	..	..	..
	Itahar	..	..	0·15	..	..	..	..
	Raiganj	..	..	..	..	..	..	..
	Dinajpur (Obsy.)	..	..	..	0·05	..	..	..
	Balurghat	..	..	..	..	0·25	..	..
	Thakurgaon	..	..	..	..	..	..	..
	Setabganj	..	..	..	..	..	..	..
	Ramganj	..	..	..	..	..	..	..
	Atwari	..	..	..	..	..	..	..
	Birganj	..	..	..	..	..	..	..
	Parbatipur	..	..	..	..	..	..	..
	Patnitola	..	..	..	0·60	..	..	..
	Sapahar*							
Jalpaiguri ..	Jalpaiguri (Obsy.)	..	..	..	..	0·09	..	..
	Alipur Duars	..	..	..	..	..	..	..
	Falakata	..	..	..	..	0·30	..	..
	Debiganj	..	..	..	..	..	..	..
	Buxa	0·30	0·35	..	0·31	0·45	0·19	..
	Kalchini	..	0·15	..	0·02	0·11	..	0·02
	Kumargram*							
Darjeeling ..	Siliguri	..	..	..	..	0·03	..	..
	Darjeeling (Obsy.)	..	..	..	..	0·66	0·01	..
	Kalimpong (Obsy.)	..	..	..	..	0·14	..	..
	Mongpoo	..	0·13	0·07	..	0·21	..	..
	Kurseong	..	..	..	..	0·03	..	..
	Pedong	0·01	0·21	0·15	0·05	0·50	0·01	..
Rangpur ..	Bhawaniganj (Gaibandha)	..	..	..	0·24	..	..	..
	Rangpur (Obsy.)	..	..	..	0·19	..	..	..
	Pirganj	..	..	..	..	..	..	..
	Kurigaon	..	..	..	0·05	0·45	..	..
	Gobindganj*							
	Bagdogra (Nilphamari)	..	..	..	..	..	..	..
	Ulipur	..	..	..	0·50	..	..	..
	Sunderganj	..	..	0·10	0·05	..	..	..
	Saidpur	..	..	..	..	..	..	..
Bogra ..	Sherpur	..	..	..	0·26	..	..	..
	Nowkhilla	..	..	0·22	..	..	..	0·05
	Bogra (Obsy.)	..	..	..	0·28	..	..	..
	Panchbibi	..	..	0·27	..	..	..	..
	Khetlal*							
	Adamdighi	..	..	..	..	..	..	..
	Dubchanchia	..	..	..	0·30	..	..	..
Pabna ..	Shazadpur	..	..	0·68	..	..	..	0·06
	Pabna	..	..	..	0·67	0·04	..	..
	Sirajganj (Obsy.)	..	..	..	0·15	..	..	..
	Iswardi	..	..	..	1·85	..	..	..
Malda ..	Malda (Obsy.)	..	..	..	0·19	..	..	..
	Chanchal	..	..	..	0·21	..	..	..
	Gazol	..	..	..	0·20	..	..	..
	Sibganj	..	..	..	0·50	..	..	..
	Gomastapur	..	..	..	0·42	..	..	..
	Nawabganj*							
Dacca.								
Dacca ..	Munshiganj	..	..	0·23	..	..	..	..
	Dacca	..	..	..	0·56	..	..	..
	Nawabganj	..	..	..	0·35	0·80	..	..
	Narayanganj (Obsy.)	..	..	..	0·06	0·01	..	..
	Narsingdi	..	..	..	0·14	0·75	..	..
	Manickganj	..	..	..	0·80	..	..	..
	Joydebpur	..	..	0·32	0·12	..	..	0·16
	Kapasia	..	..	0·12	..	..	..	..

* Not reported.

FOR THE MONTH OF FEBRUARY 1935.

28	29	30	31	Number of rainy days.	Average number of rainy days.	Total rainfall for the month.	Normal rainfall for the month.	Heaviest rainfall during the month.	Total rainfall from 1st December 1934 to 28th February 1935.	Normal rainfall from 1st December 1934 to 28th February 1935.
..				2	1·3	0·68	0·91	0·38	1·54	1·53
..				2	0·9	0·25	0·41	0·14	0·25	0·56
..				1	1·5	0·22	0·73	0·22	0·37	1·13
..				2	1·4	0·33	0·63	0·18	0·81	1·07
..				Nil	1·2	Nil	0·57	Nil	0·64	1·03
..				Nil	1·2	0·06	0·57	0·05	0·25	0·95
..				2	1·3	0·60	0·70	0·35	0·80	1·04
..				Nil	1·4	Nil	0·74	Nil	1·27	1·09
..				Nil	1·7	Nil	0·64	Nil	1·40	0·84
..				Nil	1·4	Nil	0·75	Nil	Nil	0·94
..				Nil	1·1	Nil	0·64	Nil		0·80
..				Nil	1·5	Nil	0·78	Nil	0·65	1·02
..				Nil	1·3	Nil	0·77	Nil	1·35	0·90
..				1	(*n*)	0·63	(*n*)	0·60	1·36	(*n*)
					(*n*)		(*n*)			(*n*)
..				3	1·2	1·46	0·66	0·64	2·30	1·08
..				4	1·7	1·81	0·75	1·35	1·99	1·22
..				5	1·4	2·20	0·63	1·04	2·80	1·04
..				1	1·4	0·15	0·79	0·15	0·53	1·19
..				9	2·9	3·50	1·15	0·98	4·82	2·80
..				7	2·4	1·82	1·09	0·46	2·43	1·62
					2·2		1·10			1·82
..				3	1·6	1·20	0·70	0·56	3·39	1·20
..				6	2·6	1·83	1·10	0·66	3·58	1·89
..				6	2·1	1·39	0·84	0·40	3·35	1·72
..				6	2·5	1·46	1·09	0·42	2·47	2·01
..				6	2·4	1·90	1·12	0·64	3·72	2·09
..				9	3·1	2·82	1·15	0·65	4·79	2·33
..				2	1·4	0·38	0·70	0·24	0·64	1·12
..				1	1·3	0·19	0·69	0·19	1·15	1·09
..				Nil	1·1	Nil	0·85	Nil	Nil	1·11
..				5	1·1	1·03	0·58	0·45	1·03	1·06
					1·2		0·66			1·93
..				Nil	1·4	0·03	0·66	0·03	0·03	1·10
..				2	1·2	0·88	0·56	0·50	0·88	0·86
..				3	1·1	0·47	0·51	0·18		0·81
..				Nil	1·2	Nil	0·59	Nil	0·20	0·73
0·20				4	1·4	1·44	0·75	0·53		1·24
..				2	1·4	0·53	0·82	0·26	0·90	1·32
..				2	1·7	0·50	0·78	0·28	2·16	1·25
..				1	1·3	0·34	0·89	0·27	0·59	1·31
					1·3		0·35			0·50
..				2	(*n*)	1·10	(*n*)	0·55	2·05	(*n*)
..				3	(*n*)	1·08	(*n*)	0·63	1·54	(*n*)
..				3	0·8	1·10	0·74	0·68	2·49	1·06
..				2	1·7	0·99	1·01	0·67	1·68	1·45
..				3	1·6	0·53	0·77	0·21	0·85	1·22
..				2	1·2	2·27	0·65	1·85	4·03	1·00
..				2	1·7	0·40	0·84	0·20	0·96	1·44
..				1	1·7	0·31	0·78	0·21	1·19	1·26
..				2	1·6	0·43	0·72	0·23	0·85	1·12
..				2	1·4	1·10	0·75	0·60		1·41
..				2	1·7	0·72	0·93	0·42		1·26
					1·8		0·70			1·15
..				1	2·1	0·23	1·30	0·23	1·51	1·07
0·02				3	1·9	0·95	1·25	0·56	1·48	1·76
..				3	1·7	1·31	1·07	0·80	3·81	1·45
0·06				2	2·0	0·57	1·40	0·26	1·17	1·89
0·03				4	1·8	1·87	0·95	0·75	2·20	1·40
0·10				2	1·9	0·95	1·18	0·80	1·81	1·72
..				5	1·6	0·95	1·02	0·32	1·78	1·51
..				1	1·4	0·13	0·54	0·12	1·11	0·98

(*n*) Not ascertained.

DAILY RAINFALL RECORDED IN BENGAL

Division and district.	Station.	1	2	3	4	5	6	7
Dacca—*concld.*								
Mymensingh ..	Kishoreganj	..	..	..	..	..	..	..
	Atia (Tangail)	..	..	..	..	..	..	..
	Sarisabari	..	..	..	..	..	..	..
	Mymensingh (Obsy.) ..	..	..	..	..	..	..	..
	Jamalpur	..	..	..	..	..	..	..
	Netrokona	..	..	..	..	..	..	..
	Pingna	..	..	..	..	..	..	..
	Durgapur	..	..	..	..	..	..	..
	Sherpur (Town)	..	..	..	..	..	..	..
	Dewanganj	..	..	..	..	..	..	..
	Nalitabari	..	..	..	..	0·04	..	..
Faridpur ..	Madaripur	..	..	..	0·07	..	..	..
	Faridpur (Obsy.) ..	..	..	..	0·02	..	..	..
	Rajbari (Goalundo) ..	..	..	..	0·03	..	..	..
	Haridaspur	..	..	0·13	..	..	..	..
	Takerhat	..	..	0·25	..	..	..	..
	Bhanga	..	..	..	..	..	..	..
	Pangsa	..	..	..	0·02	..	..	..
	Baliakandi	..	..	..	0·01	..	..	..
	Bhusna	..	0·07	..	..	..	..	..
	Palong*							
Bakarganj ..	Patuakhali	..	..	..	0·25	0·18	..	..
	Barguna*							
	Pirojpur	..	..	..	0·13	..	..	..
	Barisal (Obsy.) ..	..	..	..	0·06	..	..	..
	Gaurnadi	..	..	..	..	..	..	..
	Bhola	..	..	..	..	..	..	..
	Daulatkhan	..	..	..	..	0·04	..	..
	Bauphal	..	..	..	..	..	..	..
Chittagong.								
Chittagong ..	Cox's Bazar (Obsy.) ..	..	..	..	..	..	..	..
	Chittagong (Obsy.) ..	..	..	..	..	0·03	..	..
	Kutubdia*							
	Satkania	..	..	..	..	..	..	..
	Mirsarai	..	..	..	..	..	..	..
	Rangunia	..	..	..	..	..	..	..
Tippera ..	Comilla (Obsy.)	..	..	..	..	0·05	..	..
	Chandpur	..	..	..	..	..	..	..
	Brahmanbaria	..	..	..	..	..	..	..
	Ramchandrapur	..	..	..	..	..	..	..
	Nasirnagar*							
	Daudkandi*							
	Kasba	..	..	..	..	..	..	..
	Laksam	..	..	..	..	..	..	..
Noakhali ..	Noakhali (Obsy.)	..	..	..	..	0·04	..	..
	Feni	..	..	..	..	..	..	..
	Harishpur	..	..	..	..	..	..	..
	Ramganj	..	..	..	..	..	..	..
	Chhagalnaya	..	..	..	..	..	..	..
	Hatiya	..	..	..	..	..	..	..
	Lakhimpur	..	..	..	..	..	..	..
Chittagong Hill Tracts	Rangamati	..	..	..	..	..	..	..
	Bandarban	..	..	..	..	..	..	..
	Barkal	..	..	..	..	..	..	..
	Mahalchari	..	..	..	..	..	..	..
	Lama	..	..	..	..	..	..	..
	Ramgarh	..	..	..	..	..	..	..
	Manikseri	..	..	..	..	..	..	..
	Dighinala	..	..	..	..	..	..	..
	Mainmukh	..	..	..	..	0·04	..	..
	Kaptai	..	..	..	..	..	..	..
	Panchhari	..	..	..	..	..	..	..
	Nakhyongchhari ..	..	..	..	..	..	..	..
Tripura State ..	Agartala	..	..	..	..	..	..	..
Cooch Behar ..	Dinhata	..	..	..	..	0·14	0·02	..
	Cooch Behar (Obsy.) ..	..	..	..	..	0·23	0·12	..
	Mickliganj	..	..	..	..	..	0·01	..
	Mathabhanga	..	..	..	..	0·03	0·07	..
	Fulbaria (Tufanganj) ..	..	..	..	..	0·66	0·07	0·11

*Not reported.

FOR THE MONTH OF FEBRUARY 1935.

8	9	10	11	12	13	14	15	16	17	18	19	20
..	..	..	..	..	..	..	..	..	..	0·19	..	0·25
..	..	..	..	..	..	..	..	..	..	0·10	..	0·09
..	..	..	..	..	..	..	..	..	..	..	..	0·10
..	..	..	..	..	..	..	..	..	..	0·12	..	0·01
..	..	..	..	..	..	..	..	..	..	0·34	..	0·12
..	..	..	..	..	..	..	..	..	..	0·55	..	..
..	..	..	..	..	..	..	..	..	..	0·24	..	0·12
..	..	..	..	..	..	..	..	..	..	..	..	..
..	..	..	..	..	..	..	..	..	..	..	..	..
..	..	..	..	..	..	..	..	..	..	0·05	..	..
..	..	..	..	..	..	..	..	..	..	0·11	..	..
..	0·14	..	..	..	..	..	..	..	..	..	..	0·43
..	..	..	..	..	..	..	..	..	..	0·03	..	0·13
..	..	..	..	..	..	..	..	..	..	0·06	..	..
..	..	..	..	..	..	..	..	..	0·03	..	0·90	..
0·02	..	..	..	..	..	..	..	..	..	..	0·42	..
..	..	..	..	..	..	..	..	..	..	..	0·47	..
..	..	..	..	..	..	..	..	0·21	0·20	..	..	..
..	..	..	..	..	..	..	..	..	..	..	..	0·18
..	..	..	..	..	..	..	..	..	..	..	..	0·79
..	0·09	..	..	..	..	..	..	..	..	..	0·28	0·42
..	..	..	..	..	..	..	..	..	..	..	..	1·90
..	..	..	..	..	..	..	..	..	..	..	0·38	0·34
..	..	..	..	..	..	..	..	..	..	..	..	0·60
..	..	..	..	..	..	..	..	..	..	..	0·05	0·18
..	..	..	..	..	..	..	..	..	..	0·06	..	0·04
..	..	..	..	..	..	..	..	..	..	0·25	..	..
..	..	..	..	..	..	..	..	..	..	..	..	..
..	..	..	0·02	..	..	..	..	..	..	..	0·05	0·55
..	..	..	..	..	..	..	..	..	..	..	0·15	0·17
..	..	..	..	..	..	..	..	0·10	..	..	..	..
..	..	..	..	..	..	..	..	..	..	0·02	0·15	..
..	..	..	..	..	..	..	..	..	..	..	..	0·84
..	..	..	..	..	..	..	..	..	..	..	..	0·10
..	..	..	..	..	..	..	..	..	..	0·32	0·12	0·75
..	..	..	..	..	..	..	..	..	..	0·80	..	0·20
..	..	..	..	..	..	..	..	..	..	0·08	..	..
..	..	..	..	..	..	..	..	..	..	..	0·05	..
..	..	..	..	..	..	..	..	..	..	..	..	0·39
..	..	2·27	..	..	..	..	..	..	..	..	..	0·02
..	..	..	..	..	..	..	..	..	..	..	..	2·50
..	..	..	..	..	..	..	..	..	..	..	0·26	..
..	..	0·30	..	..	..	..	..	..	..	..	..	..
..	..	..	..	..	..	..	..	..	..	..	..	0·25
..	..	..	..	..	..	..	..	..	..	..	..	1·30
..	..	..	..	..	..	..	..	..	..	..	..	0·18
..	..	..	..	..	..	..	..	..	..	..	..	..
..	..	..	..	..	..	..	..	..	..	..	..	1·78
..	..	..	..	..	..	..	..	..	..	..	..	0·31
..	..	..	..	..	..	..	..	..	..	..	..	..
..	..	..	..	..	..	..	..	0·21	..	..	..	..
..	..	..	..	..	..	..	..	..	..	0·07	..	..
..	..	..	..	..	..	..	..	..	..	..	..	1·50
..	..	0·09	..	..	..	..	..	..	..	..	..	0·02
..	..	..	..	..	..	..	..	..	..	..	..	0·23
..	..	..	..	..	..	..	..	..	..	..	..	0·22
..	..	..	..	..	..	..	..	..	..	..	..	..
..	..	..	..	..	..	..	..	..	0·28	0·12	0·28	..
..	..	..	..	..	..	..	..	..	..	0·02	..	0·07
..	0·05	..	..	..	..	..	..	..	..	..	..	..
..	..	..	..	..	..	..	..	..	0·02	0·08	0·04	0·24
..	0·08	..	..	..	..	..	..	..	..	0·11	..	0·03
0·14	0·30	..	..	..	..	..	..	..	..	0·07	0·30	0·08

DAILY RAINFALL RECORDED IN BENGAL

Division and district.	Station.	21	22	23	24	25	26	27
Dacca—*concld.*								
Mymensingh ..	Kishoreganj	..	..	..	0·22	..	..	..
	Atia (Tangail)	..	..	..	0·10	..	..	..
	Sarisabari	..	..	0·40	..	..	..	..
	Mymensingh (Obsy.) ..	..	..	..	1·16	..	..	..
	Jamalpur	..	..	..	0·15	..	..	..
	Netrokona	..	..	..	0·12	..	..	..
	Fingna	..	..	..	0·46	..	..	..
	Durgapur	..	..	0·06	..	..	..	
	Sherpur (Town)	..	..	..	0·24	..	..	..
	Dewanganj	..	..	..	0·25	..	..	..
	Nalitabari	..	..	..	0·13	..	..	..
Faridpur ..	Madaripur	..	..	..	..	0·08	..	..
	Faridpur (Obsy.) ..	..	..	..	0·21	..	..	..
	Rajbari (Goalundo) ..	..	..	..	0·41	0·15	..	..
	Haridaspur	..	0·08	0·05	0·29	..	..	..
	Takerhat	..	..	0·14	0·05	..	..	..
	Bhanga	..	..	..	..	..	..	..
	Pangsa	..	..	..	..	..	..	..
	Baliakandi	..	..	..	0·21	..	..	..
	Bhusna	..	..	..	0·30	..	..	..
	Palong*							
Bakarganj ..	Patuakhali	..	..	..	..	..	..	..
	Barguna*							
	Pirojpur	..	..	..	..	..	..	..
	Barisal (Obsy.) ..	..	..	..	..	..	..	..
	Gaurnadi	..	..	0·09	0·11	0·12	..	..
	Bhola	..	..	..	..	0·06	..	..
	Daulatkhan	..	..	..	..	0·08	..	..
	Bauphal	..	..	..	..	..	..	..
Chittagong.								
Chittagong ..	Cox's Bazar (Obsy.) ..	0·30	..	..	..	..	0·39	..
	Chittagong (Obsy.) ..	0·05	..	..	..	..	..	..
	Kutubdia*							
	Satkania	..	..	..	..	..	..	..
	Mirsarai	..	..	..	..	0·70	..	..
	Rangunia	..	..	..	..	..	..	..
Tippera ..	Comilla (Obsy.)	..	..	..	..	0·04	..	..
	Chandpur	..	..	..	0·14	..	..	..
	Brahmanbaria	..	..	..	0·16	..	..	..
	Ramchandrapur	..	..	..	0·30	..	..	..
	Nasirnagar*							
	Daudkandi*							
	Kasba	..	..	..	0·28	..	0·11	..
	Laksam	..	..	..	..	..	..	..
Noakhali ..	Noakhali (Obsy.)	..	..	..	..	..	..	..
	Feni	..	..	..	..	..	0·06	..
	Harishpur	..	..	..	..	..	..	..
	Ramganj	..	0·31	..	..	..	..	..
	Chhagalnaya	..	..	..	..	..	..	..
	Hatiya	..	..	..	..	..	..	..
	Lakhimpur	..	..	..	..	0·10	..	..
Chittagong Hill Tracts	Rangamati	0·02	..	..	..	..	0·10	..
	Bandarban	..	..	..	..	..	..	..
	Barkal	..	..	..	..	..	..	..
	Mahalchari	..	..	..	..	..	0·08	..
	Lama	..	..	..	..	..	..	..
	Ramgarh	..	..	..	..	..	..	0·39
	Manikseri	..	..	..	..	..	0·04	..
	Dighinala	..	..	..	..	..	0·15	..
	Mainmukh	..	..	..	..	..	0·13	..
	Kaptai	..	..	..	..	..	..	..
	Panchhari	..	..	..	..	..	..	0·12
	Nakhyongchhari	0·11	..	..	..	..	..	..
Tripura State ..	Agartala	..	..	0·35	0·27	..	..	..
Cooch Behar ..	Dinhata	..	..	..	..	0·03	..	..
	Cooch Behar (Obsy.) ..	..	..	..	..	0·94	..	..
	Mikliganj	..	..	..	..	0·05	..	..
	Mathabhanga	..	..	..	..	0·73	..	..
	Fulbaria (Tufanganj) ..	..	..	..	..	0·13	..	..

*Not reported.

Dacca, the 19th March 1935.

FOR THE MONTH OF FEBRUARY 1935.

28	29	30	31	Number of rainy days.	Average number of rainy days.	Total rainfall for the month.	Normal rainfall for the month.	Heaviest rainfall during the month.	Total rainfall from 1st December 1934 to 28th February 1935.	Normal rainfall from 1st December 1934 to 28th February 1935.
0·05				3	1·9	0·71	0·92	0·25	1·52	1·64
0·01				2	1·7	0·30	0·03	0·10	1·31	1·42
..				2	1·4	0·50	0·72	0·40	0·50	1·15
..				2	1·7	1·29	0·94	1·16	2·43	1·34
..				3	1·5	0·61	0·88	0·34	1·12	1·38
..				2	1·9	0·67	0·97	0·55	0·74	1·38
0·26				4	1·2	1·08	0·84	0·46	1·41	0·98
..				Nil	1·7	0·06	0·80	0·06		1·19
..				1	1·4	0·24	0·73	0·24	0·69	1·12
..				1	1·1	0·30	0·56	0·25	0·70	0·87
..				2	1·3	0·28	0·59	0·13	0·51	0·89
..				2	1·8	0·72	1·08	0·43	3·85	1·71
..				2	2·2	0·39	1·32	0·21	1·29	1·89
..				2	1·9	0·65	1·21	0·41	1·40	1·72
0·09				3	1·9	1·57	1·02	0·90	2·99	1·51
..				3	1·4	0·88	0·88	0·42	2·84	1·37
..				1	2·0	0·47	0·80	0·47	3·85	1·12
..				2	2·1	0·43	0·91	0·21	1·47	1·33
..				2	2·1	0·40	1·33	0·21	1·56	2·00
..				2	2·5	1·16	1·24	0·79	2·56	1·72
					2·5		1·40			1·98
..				4	1·8	1·22	1·40	0·42	1·22	2·36
					1·7		1·34			1·83
..				2	1·8	2·03	1·28	1·90	2·32	2·03
..				2	1·9	0·78	1·05	0·38	1·58	1·85
..				3	1·8	0·92	1·04	0·60	0·92	1·42
..				1	1·7	0·29	0·92	0·18	1·23	1·58
..				Nil	1·9	0·22	0·94	0·08	1·12	1·43
..				1	1·7	0·25	1·00	0·25	1·03	1·80
..				2	0·8	0·69	0·49	0·39	0·73	1·15
..				1	1·3	0·70	1·03	0·55	1·03	2·01
					1·0		0·65			1·51
..				2	0·7	0·32	0·40	0·17	0·32	1·00
..				2	1·7	0·80	0·82	0·70	1·22	1·65
..				1	(*n*)	0·17	(*n*)	0·15	0·29	(*n*)
..				1	2·0	0·93	1·18	0·84	1·24	1·70
..				2	2·2	0·24	1·09	0·14	2·55	1·75
..				4	2·1	1·35	1·19	0·75	2·49	1·91
0·15				4	1·6	1·45	1·01	0·80	2·05	1·34
					1·9		1·02			1·52
					1·5		1·05			1·52
0·05				2	1·6	0·52	0·97	0·28	1·62	1·44
..				Nil	1·9	0·05	1·21	0·05	0·05	1·87
..				1	1·8	0·43	1·13	0·39	1·42	1·68
..				1	1·7	2·35	0·97	2·27	3·37	1·82
..				1	1·4	2·50	0·87	2·50	2·50	1·57
..				2	1·5	0·57	1·02	0·31	1·82	1·49
..				1	1·7	0·30	0·95	0·30	0·30	1·47
..				1	1·8	0·25	1·01	0·25	1·15	1·55
..				2	1·7	1·40	1·05	1·30	2·60	1·49
..				2	1·7	0·30	1·04	0·18	0·30	1·92
..				Nil	1·1	Nil	0·64	Nil	Nil	1·32
..				1	1·1	1·78	0·93	1·78	1·78	1·72
..				1	0·7	0·39	0·49	0·31	0·89	0·57
..				Nil	0·7	Nil	0·86	Nil	Nil	0·98
..				2	0·7	0·60	0·55	0·39	1·01	0·64
..				Nil	(*n*)	0·11	(*n*)	0·07	0·68	(*n*)
..				2	(*n*)	1·65	(*n*)	1·50	1·77	(*n*)
..				1	(*n*)	0·28	(*n*)	0·13	0·52	(*n*)
..				1	(*n*)	0·23	(*n*)	0·23		(*n*)
..				2	(*n*)	0·34	(*n*)	0·22	0·69	(*n*)
..				1	(*n*)	0·11	(*n*)	0·11	0·48	(*n*)
0·11				6	1·7	1·41	1·24	0·35	1·85	1·93
..				1	1·5	0·28	0·66	0·14	0·40	1·17
..				3	1·8	1·34	0·87	0·94	1·97	1·16
..				1	1·4	0·44	0·79	0·24	0·69	1·19
..				2	1·6	1·09	0·67	0·73	1·20	1·03
..				6	1·7	1·95	0·81	0·66	2·01	1·25

(*n*) Not ascertained.

S. ABDULLAH, for *Director of Agriculture, Bengal.*

Statement of weekly gauge readings on the river Ganges at Rampur Boalia for the week ending the 16th March 1935.

Date.	Hour.	Height of surface above P. W. D. datum.	Height of surface above P. W. D. datum on the same date last year.	Remarks.
1935.				
10th March	7 a.m.	37·60	36·33	Zero of gauge referred to B. M. on Rajshahi College step ; value 64·73.
11th „	7 „	37·55	36·28	
12th „	7 „	37·55	36·34	
13th „	7 „	37·45	36·24	Value of 0 of the gauge =34·55 P. W. D.
14th „	7 „	37·35	36·19	
15th „	7 „	37·30	36·14	
16th „	7 „	37·25	36·04	

Highest recorded level on 26-8-1879=64·24.
Lowest recorded level on 24-4-1931=32·05.

[ILLEGIBLE], for *Subdivisional Officer,*
Irrigation Department, Rajshahi.

Rampur Boalia, the 17th March 1935.

Statement showing the gauge readings at Dacca Waterworks Station on the river Buriganga for the week ending 9th March 1935.

Date.	At highest water.		At lowest water.		Commencement of—		Remarks.	
	Time.	Reading.	Time.	Reading.	Ebb tide.	Flow tide.	7 a.m.	5 p.m.
1935.								
3rd March ..	9-35	4·6	15-35	3·0	9-45	15-45	3·9	3·3
4th „ ..	10-20	4·7	16-25	3·1	10-30	16·35	4·1	3·2
5th „ ..	11-15	5·1	17-10	3·5	11-22	17-20	4·3	3·55
6th „ ..	12-0	5·3	18-0	3·7	12-7	18-10	4·05	4·0
7th „ ..	12-55	5·7	6-45	4·05	13-5	6-52	4·1	4·6
8th „ ..	13-45	5·8	7-35	4·15	13-55	7-45	4·3	5·1
9th „ ..	14-30	6·0	8-25	4·25	14-40	8-35	4·35	5·4

B. M. on settling tank 39·49 O. M. S. L. Zero is at O. M. S. L.

Notable high and low water-levels of previous years.

		Taken at high tide.				Taken at low tide.
27th August	1906 ..	70·5	23rd February	1907 ..	51·06
5th September	1909 ..	66·86	13th „	1908 ..	51·06
10th August	1910 ..	69·86	12th March	1912 ..	51·06
1st „	1911 ..	68·46	6th „	1914 ..	50·60
13th „	1912 ..	67·16	22nd February	1915 ..	50·30
31st „	1915 ..	69·7	15th „	1916 ..	50·60
8th „	1916 ..	68·1	3rd March	1917 ..	51·0
12th „	1917 ..	67·1	21st February	1918 ..	51·40
13th „	1918 ..	69·12	26th „	1919 ..	50·4
2nd „	1919 ..	66·8	18th „	1920 ..	50·9
8th September	1920 ..	66·9	19th „	1921 ..	50·9
28th July	1921 ..	68·4	8th March	1922 ..	51·05
10th August	1922 ..	68·00	14th „	1923 ..	50·8
31st July	1923 ..	66·15	16th February	1924 ..	50·50
29th August	1924 ..	68·82	5th March	1925 ..	50·9
8th September	1925 ..	68·52	9th February	1926 ..	2·2
15th August	1926 ..	19·6	27th „	1927 ..	2·10
17th September	1927 ..	18·70	16th „	1928 ..	2·2
22nd August	1928 ..	20·0	21st „	1929 ..	2·0
13th July	1929 ..	17·8	24th „	1930 ..	2·3
12th September	1930 ..	18·65	28th „	1931 ..	2·2
16th August	1931 ..	21·7	18th „	1932 ..	1·8
6th September	1932 ..	18·5	6th „	1933 ..	2·10
7th „	1933 ..	17·80			
23rd August	1934 ..	19·35	26th March	1934 ..	2·40

N.B.—Zero of the gauge at Dacca Waterworks prior to 11 a.m. on the 8th January 1926 = −48·51 with reference to P.W.D. datum.

Zero of the gauge at Dacca Waterworks since 11 a.m. of the 8th January 1926=0·00 with reference to P. W. D. datum.

M. K. BHATTACHARJEE, *Executive Engineer, Khulna Division.*

Khulna, the 18th March 1935.

Vital statistics of towns with a population of 50,000 and over of the Bengal Presidency for the week ending Saturday, the 9th March 1935.

Districts.	Nos.	Towns.	Population under registration according to census of 1931.			Births registered.		Deaths registered																						
			Male.	Femal	Total.	Number registered (excluding still-births).	Still-births registered.	Cholera.	Small-pox.	Plague.	Cerebro spinal meningitis	Malaria.	Enteric fever.	Measles.	Relapsing fever.	Kala-azar	Influenza.	Other fevers.	Dysentery	Diarrhœa.	Pneumonia.	Phthisis.	Other respiratory diseases.	Injuries including suicide	Deaths from child-birth.	Other causes.	Total of all causes.			Total of corresponding week of the previous year.		
																										Male.	Female.	Total	Male	Female.	Total.
Calcutta ..	1	Calcutta ..	814,948	381,786	1,196,734	515	35	100	47	..	32	19	21	5	..	1	13	23	43	16	50	54	110	8	..	308	465	385	850	386	287	673
Burdwan ..	2	Asansol Mining Settlement.	209,544	173,136	382,680	165	4	10	..	..	..	1	..	..	..	..	..	61	11	..	7	2	4	..	3	51	86	64	150	57	51	108
Howrah ..	3	Howrah ..	145,120	79,753	224,873	99	3	19	5	..	..	2	3	1	..	..	..	5	9	14	16	13	21	4	..	59	91	80	171	75	59	134
Dacca ..	4	Dacca ..	79,365	59,153	138,518	92	3	4	..	..	..	..	..	..	..	..	..	..	.	1	7	2	9	3	1	18	25	20	45	26	20	46
24-Parganas	5	Bhatpara .	60,134	24,841	84,975	29	..	1	2	..	..	1	1	..	..	..	..	11	..	2	2	..	2	..	1	7	14	16	30	8	7	15
Chittagong ..	6	Chittagong	35,049	18,107	53,156	26	..	1	..	..	..	...	1	..	..	..	..	5	..	..	..	..	1	..	1	5	10	4	14	12	3	15

R. B. KHAMBATA, M.R.C.S. (ENG.), L.R.C.P. (LOND.), D.P.H. (CAMB.), *Director of Public Health, Bengal.*

Calcutta, the 14th March 1935.

DISTRICT REPORTS ON WEATHER AND CROPS.

For the week ending on the 20th March 1935.

Summary.—The week was practically rainless. Preparation of lands for and sowing of jute and paddy are progressing but rain is needed for the operations. Harvesting of spring crops is much advanced. Prospects of standing crops are generally fair. During the week ending Saturday, the 16th March 1935, 2,037 persons attended different relief centres and 418 persons received gratuitous relief in the distressed areas of Murshidabad. In Birbhum and Bankura, 3,001 and 1,208 persons, respectively, were employed on test relief works on Saturday, the 16th March 1935. The average price of common rice for the province has risen by about 0·35 per cent. as compared with that of the previous week.

Serial No.	District and subdivision.	Rainfall.	Price of common rice, in seers, per rupee.		Character of the weather, condition of crops, etc.
			This week.	Previous week.	
1	2	3	4	5	6
		Inches.			
1	24-Parganas ..	Nil	10½	10½	Weather seasonable. No damage to crops is reported. Fodder and water are sufficient. Export and import normal.
	Diamond Harbour	Nil	13	13½	
	Barrackpore ..	Nil	10	10	
	Baraset ..	Nil	10	10	
	Basirhat ..	Nil	12 3/16	12 3/16	
2	Nadia ..	Nil	10	10	Weather seasonable. Import and export of rice normal. Harvesting of *rabi* crops continues. Prospects of standing crops are fair. Fodder and water are sufficient. Cattle-disease exists in Kushtia subdivision.
	Kushtia ..	Nil	13	13	
	Meherpur ..	Nil	10⅜	10⅜	
	Chuadanga ..	Nil	12	12	
	Ranaghat ..	Nil	9½	9½	
3	Murshidabad ..	Nil	10½	10½	Weather seasonable. Prospects of standing crops are favourable. Fodder is insufficient in some places in Sadar subdivision. Stock of rice and water are sufficient. No large export or import. Test relief works continue. 1,891 men, 86 women and 60 children attended relief centres during the week ending Saturday, the 16th March 1935. Number of persons receiving gratuitous relief in the distressed areas was 188 and 230 in Lalbagh and Jangipur subdivisions, respectively.
	Lalbagh ..	Nil	10½	10½	
	Jangipur ..	Nil	11½	11½	
	Kandi ..	(*n*)	(*n*)	11½	
4	Jessore ..	Nil	11	11	Weather seasonable. Prospects of standing crops are fair. No large export or import. Fodder and water are sufficient. Cattle disease exists in Lohagara police-station.
	Jhenidah ..	Nil	13	13	
	Magura ..	Nil	12	12	
	Narail ..	Nil	13	13	
	Bongaon ..	Nil	10	10	
5	Khulna ..	Nil	12	12	Weather seasonable and its effects on crops are fair Fodder and water are sufficient.
	Satkhira ..	Nil	12½	12½	
	Bagerhat ..	Nil	12½	12½	

(*n*) Not reported.

Serial No.	District and sub-division.	Rainfall.	Price of common rice, in seers, per rupee.		Character of the weather, condition of crops, etc.
			This week.	Previous week.	
1	2	3	4	5	6
		Inches.			
6	Burdwan ..	Nil	11	11	Weather seasonable. Condition of crops is not satisfactory. Fodder and water are sufficient.
	Asansol ..	Nil	10	10	
	Katwa ..	Nil	11½	11	
	Kalna ..	Nil	10	10	
7	Birbhum ..	Nil	12	12	Weather seasonable. Prospects of standing crops are fair. Fodder and water are sufficient. Cattle-disease is reported from Mowreswar police-station. 3,001 men were employed on test relief works on Saturday, the 16th March 1935.
	Rampurhat ..	Nil	11	11	
8	Bankura ..	Nil	11½	11	Weather seasonable. Fodder and water are sufficient. Pressing of sugarcane still continues. No large export or import. Prospects of standing crops are fair. Cattle-disease is reported from Indas, Joypur and Borjora police-stations. 1,208 persons were employed on test relief works opened by the district board, on Saturday, the 16th March 1935.
	Vishnupur ..	Nil	11	11	
9	Midnapore ..	Nil	13	13	Weather seasonable. Planting of sugarcane is going on. Prospects of standing crops are fair. Fodder and water are sufficient.
	Contai ..	Nil	14	15	
	Tamluk ..	Nil	11	11	
	Ghatal ..	Nil	12	12½	
	Jhargram ..	Nil	12½	12½	
10	Hooghly ..	Nil	10½	10	Weather seasonable. Fodder and water are sufficient.
	Serampore ..	Nil	10	10	
	Arambagh ..	Nil	11½	11½	
11	Howrah ..	Nil	10	10	Weather seasonable. Its effects are favourable. Fodder and water are sufficient.
	Uluberia ..	Nil	11	11½	
12	Rajshahi (Rampur Boalia).	Nil	11½	11½	Weather seasonable and favourable to the harvesting of *rabi* crops. Lands are being prepared for sowing of jute and paddy. Fodder and water are sufficient. Cattle-disease is reported from Naogaon Subdivision.
	Naogaon ..	Nil	(*n*)	13	
	Nator ..	Nil	10½	11½	
13	Dinajpur ..	Nil	12½	12½	Weather seasonable. Fodder and water are sufficient.
	Thakurgaon ..	Nil	13	13	
	Balurghat ..	Nil	13 4/16	13 4/16	
14	Jalpaiguri ..	Nil	13	13	Weather hot. Rain is badly needed. Fodder and water are sufficient.
	Alipur ..	Nil	13	13	

(n) Not reported.